APPLICATION FOR HCAI PREAPPROVAL OF MANUFACTURER'S CERTIFICATION (OPM)

OFFICE USE ONLY

APPLICATION #: OPM-0471

HCAI Preapproval of Manufacturer's Certification (OPM)

Type: ☐ New ☒ Renewal/Update

Manufacturer Information

Manufacturer: Aladdin Temp-Rite LLC

Manufacturer's Technical Representative: David Gordon

Mailing Address: 250 East Main St, Hendersonville, TN 37075

Telephone: (615) 537-3878 Email: dgordon@aladdin-atr.com

Product Information

Product Name: Convect-Rite III Docking Station plus Cart

Product Type: Rethermalization refrigerator unit with cart

Product Model Number: Docking Station: CRNDS0, CRNDS1, CRNDS2, CRNDS4; Cart CR3Cxx, CR3CPOSxx

General Description: Rethermalization docking station for meal carts to heat/cool meals prior to distribution to patients. The docking station provides the controls for consistent convected refrigeration and heat as required of meals in cart. After rethermalization, the insulated cart is then disengaged and serves as the meal delivery cart.

REVIEWED FOR CODE COMPLIANCE
HCAI
OPM-0471
BY: Roy Lobo
DATE: 11/16/2026
CALIFORNIA BUILDING CODE

Applicant Information

Applicant Company Name: Aladdin Temp-Rite LLC

Contact Person: David Gordon

Mailing Address: 250 East Main St, Hendersonville, TN 37075

Telephone: (619) 537-3878 Email: dgordon@aladdin-atr.com

Title: Director of Engineering

Registered Design Professonal Preparing Engineering Recommendations

Company Name: DEGENKOLB ENGINEERS

Name: Chad Closs California License Number: S5946

Mailing Address: 225 Broadway, Suite 1325, San Diego, CA 92101

Telephone: (858) 699-5412 Email: ccloss@degenkolb.com

Certification Method

Testing in accordance with: ☐ ICC-ES AC156 ☐ FM 1950 ☐ ASHRAE 171 ☐ FEMA 461

☐ Other(s) (Please Specify):

*Use of criteria other than those adopted by the California Building Standards Code, 2025 (CBSC 2025) for component supports and attachments are not permitted. For distribution system, interior partition wall, and suspended ceiling seismic bracings, test criteria other than those adopted in the CBSC 2025 may be used when approved by HCAI prior to testing.

☒ Analysis

☐ Experience Data

☐ Combination of Testing, Analysis, and/or Experience Data (Please Specify):

REVIEWED FOR CODE COMPLIANCE
OPM-0471
BY: Roy Lobo
DATE: 11/16/2026
CALIFORNIA BUILDING CODE, 2025

HCAI Approval

Date: 11/16/2026

Name: Roy Lobo Title: Principal Structural Engineer

Condition of Approval (if applicable):

GENERAL NOTES

I. GENERAL

1. THIS OSHPD PRE-APPROVAL OF MANUFACTURE 'S CERTIFICATION (OPM) IS BASED ON THE CBC 2025. THE DEMAND (DESIGN FORCES) FOR USE WITH THIS OPM SHALL BE BASED ON THE CBC 2025.
2. THIS PRE-APPROVAL IS VALID FOR THE EQUIPMENT DESCRIBED IN THESE DRAWINGS THROUGHOUT THE STATE OF CALIFORNIA, PER THE C_{pm} LIMITS NOTED IN THESE GENERAL NOTES

II. RESPONSIBILITIES OF THE STRUCTURAL ENGINEER OF RECORD

1. VERIFY MATERIALS AND WORKMANSHIP TO CONFORM WITH THE 2025 EDITION OF THE CALIFORNIA BUILDING CODE AND THE REQUIREMENTS OF THIS PRE-APPROVAL DOCUMENT.
2. VERIFY THE ADEQUACY OF THE EXISTING FRAMING TO SUPPORT THE LOADS INDICATED ON S3 AND S4, IN ADDITION TO ALL OTHER LOADS.
3. DESIGN ANY SUPPLEMENTARY MEMBER AND THEIR ATTACHMENTS OTHER THAN THOSE DETAILED WITHIN THIS PRE-APPROVAL.
4. VERIFY THE EQUIPMENTS WEIGHT, LOCATION, ANCHOR LOCATIONS AND ANCHOR DETAILS AGREE WITH THE INFORMATION SHOWN IN THIS PRE-APPROVAL.

III. STRUT FRAMING

1. CONNECTORS MANUFACTURED BY MASON WEST CORPORATION AND B-LINE. CHANNEL FRAMING COMPONENTS MANUFACTURED BY UNISTRUT, MASON WEST CORPORATION OR B-LINE. SEE SHEET S3.
2. CHANNEL FRAMING TO CONFORM TO ASTM A1011 SS, GRADE 33 .
3. STRUT TYPE: SOLID SECTIONS ONLY. CHANNEL MINIMUM SECTION PROPERTIES:

CHANNEL	A (IN.^{2})	S_{xx} (IN.^{3})	I_{xx} (IN.^{4})	GAGE	WT (PLF)
1 5/8" SQ	0.544	0.195	0.180	12	1.89
1 1/4" SQ	0.305	0.086	0.061	14	1.04

IV. MECHANICAL ANCHORS

1. WEDGE ANCHORS INTO CONCRETE OR MASONRY: SEE S4. ANCHORS SHALL BE ZINC COATED CARBON STEEL. INSTALL ANCHORS IN ACCORDANCE WITH ICC REPORT. MASONRY ANCHORAGE ONLY APPLICABLE TO UNCRACKED, FULLY GROUTED CONCRETE MASONRY UNIT CONSTRUCTION PER ICC ESR-4561, ICC ESR-5915, OR ICC ESR-4042. CONCRETE ANCHORAGE APPLICABLE TO CONCRETE CONSTRUCTION PER ICC ESR-4266, ICC ESR-3037, OR ICC ESR-2502.
2. IF REINFORCEMENT IS ENCOUNTERED DURING DRILLING, ABANDON AND SHIFT THE HOLE LOCATION TO AVOID THE REINFORCEMENT. PROVIDE A MINIMUM OF 2 ANCHOR DIAMETERS OR 1 INCH, WHICHEVER IS LARGER, OF SOUND CONCRETE BETWEEN THE DOWEL AND THE ABANDONED HOLE. FILL THE ABANDONED HOLE WITH NON-SHRINK GROUT APPROVED BY THE ENGINEER OF RECORD. NOTIFY THE ENGINEER OF RECORD IF ANY REINFORCING IS DAMAGED.
3. ANCHORS WILL BE PROOF-TESTED BY OWNER'S TESTING AND INSPECTION AGENCY.
4. IF ANY ANCHOR FAILS TESTING, REPLACE ANCHOR AND TEST ADDITIONAL ANCHORS OF THE SAME CATEGORY NOT PREVIOUSLY TESTED UNTIL TWENTY (20) CONSECUTIVE PASS, THEN RESUME INITIAL TESTING FREQUENCY.
5. TEST ANCHORS NO SOONER THAN 24 HOURS AFTER INSTALLATION.
6. TEST 50% WEDGE ANCHORS PER THE FOLLOWING METHOD:
   A. TORQUE WRENCH METHOD: TEST ANCHORS TO THE TORQUE LOAD INDICATED IN THE TABLE BELOW WITHIN THE FOLLOWING LIMITS:
      1. ONE-HALF TURN OF THE NUT.

TORQUE LOAD (FT-LBS)			
BASE MATERIAL	HILTI	SIMPSON	DEWALT
CONCRETE	40	60	40
CMU	25	40	45

V. STRUCTURAL STEEL

1. STRUCTURAL STEEL TO CONFORM TO THE FOLLOWING UNLESS OTHERWISE NOTED:
   STAINLESS STEEL BOLTS: ASTM A320 S.S. GR. B8 CLASS 1 OR
   A307 ZINC BOLTS PER ASTM F2329
   MASON WEST (BREAK-OFF NUT) AND B-LINE CONNECTORS: NUTS AND BOLTS MOUNTED TO CHANNELS SHALL BE TIGHTENED TO THE FOLLOWING MINIMUM TORQUES:

BOLT DIAMETER (IN.)	BOLT TORQUE (FT. LBS.)
1/2	50

   PLATES: ASTM A572 GR 50
   WELDING ELECTRODE: E70XXX
2. HOT DIPPED GALVANIZED IN ACCORDANCE WITH ASTM A123 AND ASTM A153 STRUCTURAL STEEL.

VI. WOOD

1. INSTALL WOOD SCREWS PER IAPMO ER-192. VERIFY (E) WOOD STUDS MEET MATERIAL REQUIREMENTS IN ACCORDANCE WITH THE IAPMO REPORT.

VII. STRUCTURAL TESTS, INSPECTIONS, AND OBSERVATIONS

1. AN INDEPENDENT TESTING AGENCY AND SPECIAL INSPECTORS WILL BE RETAINED BY THE OWNER TO PERFORM THE FOLLOWING TESTS AND INSPECTION. PROVIDE ACCESS AND FURNISH SAMPLES TO THE AGENCY AS REQUIRED.
2. THE FOLLOWING ITEMS REQUIRE TESTS AND INSPECTIONS IN ACCORDANCE WITH THE REQUIREMENTS OF THE CHAPTER "STRUCTURAL TESTS AND INSPECTIONS" OF THE CODE.
3. MECHANICAL ANCHORS:
   A. VERIFY TYPE OF ANCHOR, ANCHOR DIMENSIONS, CONCRETE TYPE AND COMPRESSIVE STRENGTH, PREDRILLED HOLE DIMENSIONS, ANCHOR SPACING, EDGE DISTANCE, SLAB THICKNESS AND ANCHOR EMBEDMENT.
   B. PROOF-TEST AS INDICATED IN THE MECHANICAL ANCHORS SECTION OF THESE GENERAL NOTES.

VIII. DESIGN CRITERIA

1. APPLICABLE CODE: 2025 CALIFORNIA BUILDING CODE.
2. SEISMIC DESIGN:
   ALLOWABLE SEISMIC FORCE $F_{P,ASD} = 0.7*0.4\ S_{DS}*I_p*W_p*[H_f/R_u]*[C_{AR}/R_{po}]$ $Ev_{ASD} = 0.7*0.2(S_{DS})W_p$
   WHERE:
   S_{DS} = VARIES, WORST CASE ACCEL. H_f = VARIES, FORCE AMPLIFICATION AS A FUNCTION OF HEIGHT
   Ip = 1.5 FOR ESSENTIAL EQUIP. R_u = VARIES, STRUCTURE DUCTILITY REDUCTION FACTOR
   z/h= VARIES
   NOT APPLICABLE AT SITES WITH SOIL CLASS F

R_{po} = 1.5
Ω_{op} = 2.0
C_{AR} = 1.0
— OTHER MECHANICAL OR ELECTRICAL COMPONENTS

3. THIS PRE-APPROVAL HAS THE FOLLOWING LIMITATION BASED ON THE VALUE OF:
   C_{PM} = MAX COMPONENT DESIGN FORCE COEFFICIENT = F_{PASD} / W_P

GROUP A C_{PM}	GROUP B C_{PM}
1.80	1.52

ENGINEER OF RECORD MUST VERIFY PRE-APPROVAL IS VALID FOR SPECIFIC SITE AND UNIT INSTALLATION LOCATION. IF C_P IS LARGER THAN C_{PM}, PRE-APPROVAL IS NOT APPLICABLE AND ENGINEER OF RECORD IS RESPONSIBLE FOR PROVIDING ALTERNATE SUPPORTS & ATTACHMENTS DESIGN.

IX. HOW TO USE THIS PRE-APPROVAL

1. REVIEW AND UNDERSTAND ALL GENERAL NOTES AND FIGURES BEFORE PROCEEDING.
2. DETERMINE THE MAXIMUM DEMANDS ON THE EXISTING STRUCTURE FROM THE NEW UNIT FROM THE TABLE ON SHEETS S3 AND S4, AND VERIFY THE ADEQUACY Of THE EXISTING STRUCTURE WITH THE ENGINEER OF RECORD FOR THE BUILDING.

GROUP CATEGORY BASED ON CART & DOCKING STATION COMBINATION

		CART MODEL NUMBERS						
		CR3C20	CR3C24	CR3C26	CR3C30	CR3CPOS20	CR3CPOS24	CR3CPOS30
DOCKING STATION MODEL NUMBERS	CRNDS0	-	A	-	-	-	A	-
	CRNDS1	-	-	B	B	-	-	B
	CRNDS2	A	-	-	-	A	-	-
	CRNDS4	A	-	-	-	A	-	-

TABLE NOTES

1. "-" REPRESENTS A CART & DOCKING STATION COMBINATION THAT IS NOT ALLOWED
2. THE NUMBERS AFTER "CR3C" AND "CR3CPOS" REPRESENT THE MAXIMUM NUMBER OF MEALS THE CART CAN HOLD

Degenkolb
DEGENKOLB ENGINEERS
225 Broadway, Suite 1325
San Diego, CA 92101
619.515.0299 PHONE
www.degenkolb.com
DE Job Number: C6753022.00

REGISTERED PROFESSIONAL ENGINEER
CHAD RAYMOND CLOSS
No. S 5946
STRUCTURAL
STATE OF CALIFORNIA
10/01/2026

SHEET LIST

S1	GENERAL NOTES
S2	CONNECTION DETAILS
S3	CONNECTION DETAILS
S4	CONNECTION DETAILS
S5	CONNECTION DETAILS

ALADDIN TEMP-RITE CONVECT-RITE III
CART MODELS: CR3Cxx, CR3CPOSxx
DOCKING STATION MODELS: CRNDS0, CRNDS1, CRNDS2, CRNDS4

Title: GENERAL NOTES

Sheet Number: OPM-0471 S1

Drawn:	AS	Job number:	C6753022.00
Design:	AS	Rev:	
Check:	CRC	Scale:	N.T.S.
Date	10/02/2026		

OF Sheets

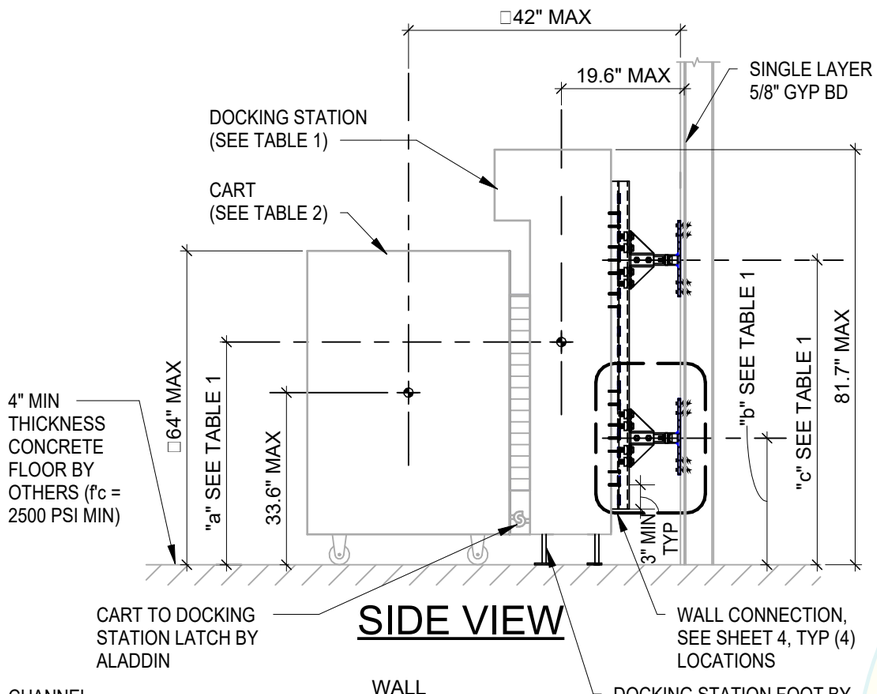

SIDE VIEW

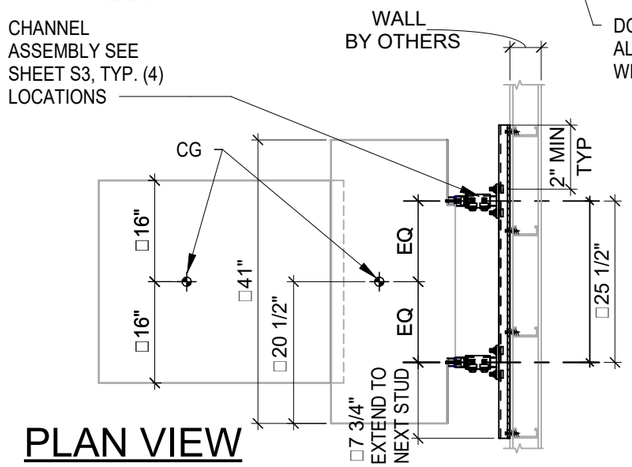

PLAN VIEW

TABLE 1: DOCKING STATION WEIGHT AND DIMENSIONS

DOCKING STATION MODEL NUMBER	MAX WEIGHT (lbs.)	"a" (IN)	"b" (IN)	"c" (IN)
CRNDS0	485	36.46	17.56	46.56
CRNDS2	485	36.46	17.56	46.56
CRNDS4	453	36.13	15.89	43.89
CRNDS1	519	40.49	19.72	47.72

TABLE 2: MAXIMUM CART AND MEAL WEIGHTS

MAX MEALS	CART MODEL	MAX CART WEIGHT (lbs.)	MAX MEAL WEIGHT (lbs.)	MAX CART & MEAL WEIGHT (lbs.)
24	CR3C	381	120	501
	CR3CPOS	407	120	527
30	CR3C	432	150	582
	CR3CPOS	444	150	594

TABLE NOTES:
1. ASSUMES 5 LBS PER MEAL
2. THE NUMBERS AFTER "CR3C" AND "CR3CPOS" REPRESENT THE MAX NUMBER OF MEALS PER MODEL NUMBER. SEE TABLE ON S1.

REVIEWED FOR CODE COMPLIANCE
OPM-0471
BY: Roy Lobo
DATE: 11/16/2026
CALIFORNIA BUILDING CODE, 2025

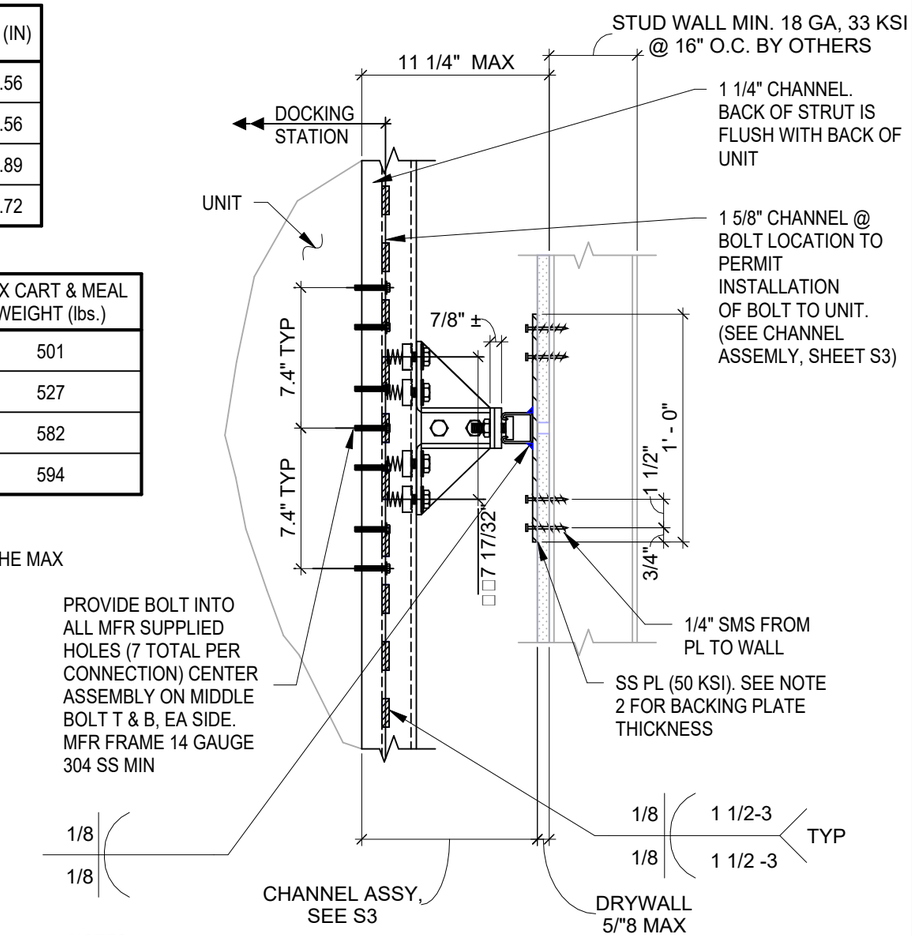

NOTES:
1. WELD UNISTRUTS TOGETHER PRIOR TO INSTALLATION TO UNIT.
2. FOR VALUES OF $C_{PM} \leq 1.05$ FOR GROUP A AND 0.95 FOR GROUP B, UTILIZE 3/16" PL THICKNESS. FOR LARGER VALUES UTILIZE 1/4" PL THICKNESS. SEE SHEET S1 FOR GENERAL NOTES DESIGN CRITERIA.

WALL CONNECTION

Degenkolb
DEGENKOLB ENGINEERS
225 Broadway, Suite 1325
San Diego, CA 92101
619.515.0299 PHONE
www.degenkolb.com
DE Job Number: C6753022.00

REGISTERED PROFESSIONAL ENGINEER
CHAD RAYMOND CLOSS
No. S 5946
STRUCTURAL
STATE OF CALIFORNIA
10/01/2026

ALADDIN TEMP-RITE CONVECT-RITE III
CART MODELS: CR3Cxx, CR3CPOSxx
DOCKING STATION MODELS: CRNDS0, CRNDS1, CRNDS2, CRNDS4

Title: CONNECTION DETAILS

Sheet Number: OPM-0471 S2

Drawn:	AS	Job number:	C6753022.00
Design:	AS	Rev:	
Check:	CRC	Scale:	As indicated
Date	10/02/2026		

OF Sheets

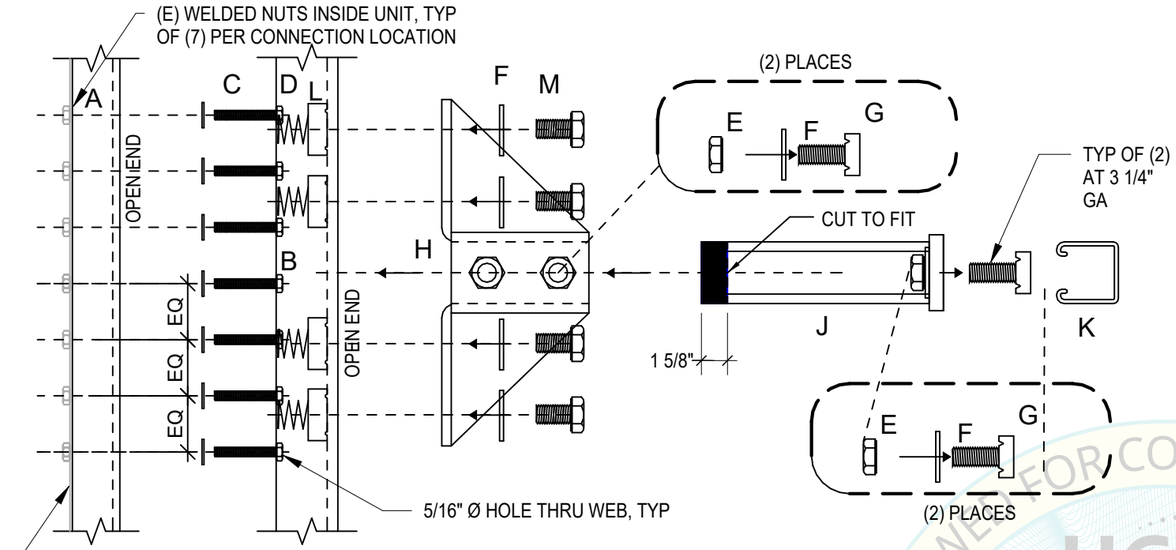

CHANNEL ASSEMBLY

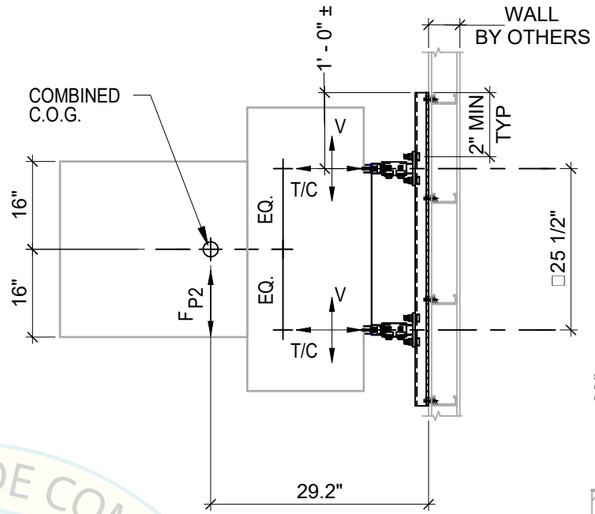

PLAN VIEW

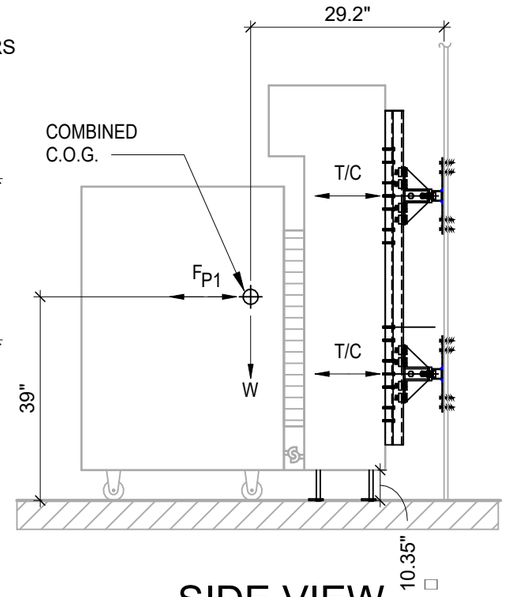

SIDE VIEW

PARTS LIST

A. 1 1/4" CHANNEL CONTINUOUS FULL HEIGHT OF UNIT.
B. 1/4"-20 STAINLESS STEEL BOLT INTO (E) UNIT WELD NUTS. (7) PER CONNECTION LOCATION. SEE NOTE 2.
C. 1/4" S.S. FLAT WASHER. (1) PER STAINLESS STEEL BOLT.
D. 1 5/8" CHANNEL CONTINUOUS ALONG AND CENTERED ON 'A' WITH FLARE BEVEL WELD CONNECTION PER S2.
E. STANDARD HEX NUT OR BREAK-OFF NUT (MW-BON-1/2)
F. 1/2" S.S. FLAT WASHER. ASME B18.21.1-2009
G. 1/2"- MW-SSN-1/2 STRUT BOLT.
H. UNISTRUT FITTING #P2348.
J. UNISTRUT FITTING #P2944 CUT AS SHOWN.
K. 1 5/8" CHANNEL ALONG WALL WELDED TO PL PER S2.
L. B-LINE N200 SERIES SPRING NUT. SEE NOTE 3 BELOW, & NOTE V.I ON SHEET S1
M. 1/2"-20 STAINLESS STEEL HEX HEAD BOLT INTO SPRING NUT. SEE NOTE 3.

SHEET NOTES:

1. NO PARTS SUPPLIED BY ALADDIN.
2. B CONNECTS 1 5/8" CHANNEL TO 1 1/4" CHANNEL AND MFR FRAME 14 GAUGE 304 SS MIN
3. ASSEMBLY L-F-M AND E-F-G CAN BE INTERCHANGEABLE.

GROUP A				GROUP B			
MAX C_{PM}	F_{P1}, F_{P2} (lbs.)	CONNECTION FORCES (lbs.)		MAX C_{PM}	F_{P1}, F_{P2} (lbs.)	CONNECTION FORCES (lbs.)	
		T/C	V			T/C	V
1.80	1278	853	424	1.52	1182	834	431

TABLE NOTES:

1. Fp FORCES ARE FOR ALLOWABLE STRESS DESIGN.
2. T/C AND V VALUES CAN BE LINEARLY INTERPOLATED USING THE C_P VALUE FROM ZERO TO THE MAX NOTED FOR EACH GROUP
3. SEE SHEET 1 FOR GENERAL NOTES.

REVIEWED FOR CODE COMPLIANCE
HCAi
OPM-0471
BY: Roy Lobo
DATE: 11/16/2026
CALIFORNIA BUILDING CODE, 2025

Degenkolb
DEGENKOLB ENGINEERS
225 Broadway, Suite 1325
San Diego, CA 92101
619.515.0299 PHONE
www.degenkolb.com
DE Job Number: C6753022.00

REGISTERED PROFESSIONAL ENGINEER
CHAD RAYMOND CLOSS
No. S 5946
STRUCTURAL
STATE OF CALIFORNIA
10/01/2026

ALADDIN TEMP-RITE CONVECT-RITE III
CART MODELS: CR3Cxx, CR3CPOSxx
DOCKING STATION MODELS: CRNDS0, CRNDS1, CRNDS2, CRNDS4

Title: CONNECTION DETAILS

Sheet Number: OPM-0471 S3

Drawn: AS | Job number: C6753022.00
Design: AS | Rev:
Check: CRC | Scale: As indicated
Date: 10/02/2026 | OF Sheets

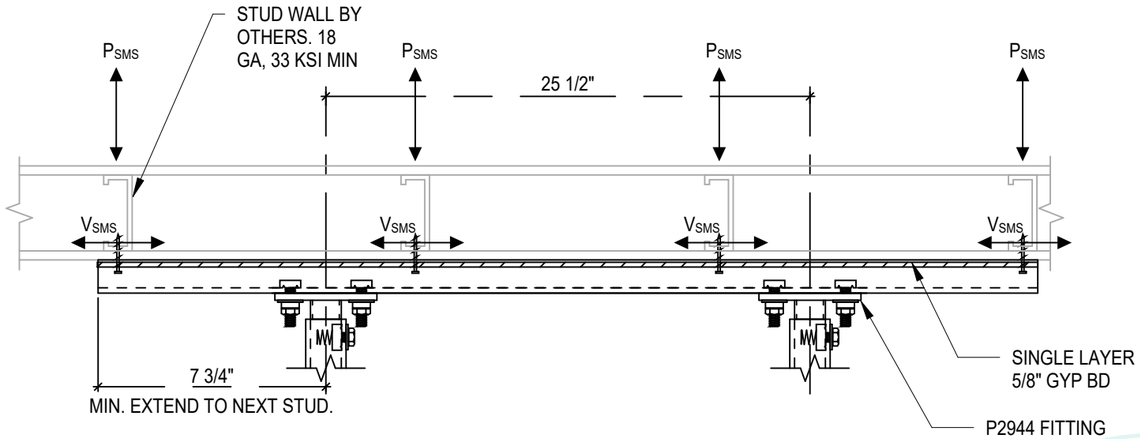

PLAN VIEW

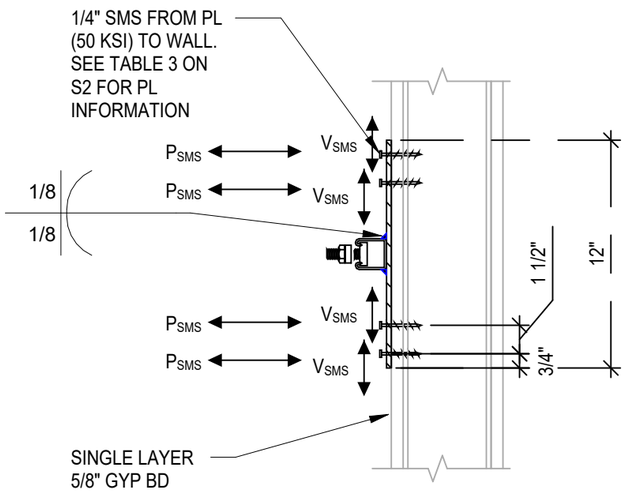

WALL CONNECTION

WALL SUBSTRATE	ANCHOR	MIN EDGE DISTANCE	MIN END DISTANCE	MIN SPACING	NOTES / REFERENCE
2500 PSI MIN NWC OR SAND LIGHT WEIGHT CONCRETE. MIN 8" THICK	1/2"Øx2 1/2" EFFECTIVE EMBED EXPANSION ANCHOR	8"	N/A	6"	INSTALL IN ACCORDANCE WITH ICC ESR REPORTS LISTED IN THE GENERAL NOTES
SOLID GROUT CMU	1/2"Øx3 1/4" EFFECTIVE EMBED EXPANSION ANCHOR. SEE NOTE 1.	8"	N/A	ONE PER CELL, 8" O.C.	INSTALL IN ACCORDANCE WITH ICC ESR REPORTS LISTED IN THE GENERAL NOTES
WOOD STUDS	SAME AS METAL STUD WALL W/ SIMPSON SDWH19600DB SCREWS	1"	4"	3"	INSTALLED IN ACCORDANCE WITH IAPMO ER-192 . SEE NOTE 2

NOTE:
1. THE USE OF EXPANSION MASONRY ANCHORS SHALL SATISFY ICC-ES ESR REPORTS LISTED IN THE GENERAL NOTES AND THE RDP SHALL SUBMIT CALCULATIONS DEMONSTRATING THE FOLLOWING:
   A. THE MASONRY WALL IS NOT CRACKED AS DEFINED IN ICC-ESR REPORTS LISTED IN THE GENERAL NOTES.
   B. THE MASONRY WALL WILL NOT CRACK UNDER THE DESIGN EARTHQUAKE LOADS UNDER ALL SERVICE LOAD CONDITIONS. i.e. THE WALL REMAINS ELASTIC
2. WOOD STUDS MUST BE SOLID-SAWN LUMBER OR ENGINEERED WOOD WITH 0.50 MIN SPECIFIC GRAVITY. ENGINEERED WOOD MUST HAVE 0.8E MIN MODULUS OF ELASTICITY FOR LATERAL LOADING AND 1.55E MIN FOR WITHDRAWAL LOADING PER IAPMO ER-192. APPLICABILITY LIMITED TO LOCATIONS WHERE A MAXIMUM OF (2) LAYERS OF GYPSUM BOARD ARE PRESENT PER ICC-ES AC233.

GROUP A SCREW FORCES (lbs.)			GROUP B SCREW FORCES (lbs.)		
MAX C_{PM}	P_{SMS}	V_{SMS}	MAX C_{PM}	P_{SMS}	V_{SMS}
1.80	110	50	1.52	104	50

TABLE NOTES:
1. SMS FORCES ARE FOR ALLOWABLE STRESS DESIGN.
2. SEE SHEET 1 FOR GENERAL NOTES.
3. P_{SMS} IS APPLIED TO THE PLAN LEFT AND RIGHT CONNECTION POINT WITH OPPOSITE SIGN.

REVIEWED FOR CODE COMPLIANCE
HCAi
OPM-0471
BY: Roy Lobo
DATE: 11/16/2026
CALIFORNIA BUILDING CODE 2022

Degenkolb
DEGENKOLB ENGINEERS
225 Broadway, Suite 1325
San Diego, CA 92101
619.515.0299 PHONE
www.degenkolb.com
DE Job Number: C6753022.00

REGISTERED PROFESSIONAL ENGINEER
CHAD RAYMOND CLOSS
No. S 5946
STRUCTURAL
STATE OF CALIFORNIA
10/01/2026

ALADDIN TEMP-RITE CONVECT-RITE III
CART MODELS: CR3Cxx, CR3CPOSxx
DOCKING STATION MODELS: CRNDS0, CRNDS1, CRNDS2, CRNDS4

Title: CONNECTION DETAILS

Sheet Number: OPM-0471 S4

Drawn:	AS	Job number:	C6753022.00
Design:	AS	Rev:	
Check:	CRC	Scale:	1 1/2" = 1'-0"
Date	10/02/2026		

OF Sheets

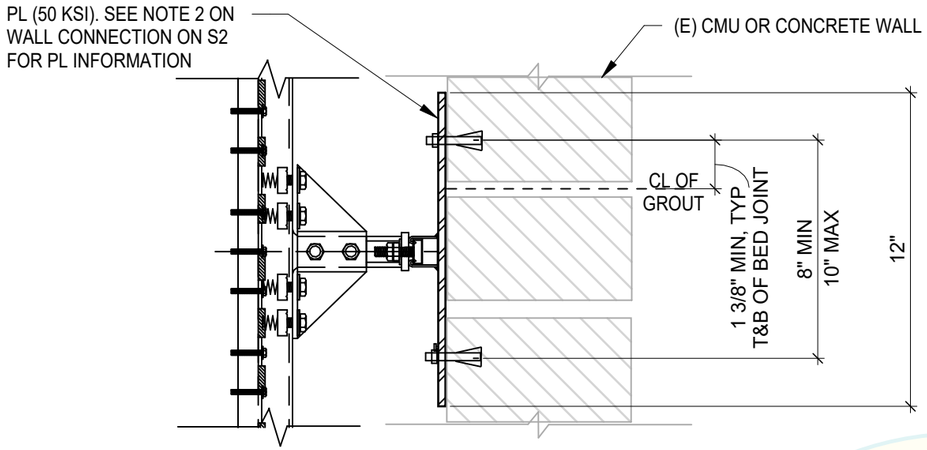

WALL CONNECTION

GROUP A BOLT FORCES (lbs.)			GROUP B BOLT FORCES (lbs.)		
MAX C_{PM}	P_{BOLT}	V_{BOLT}	MAX C_{PM}	P_{BOLT}	V_{BOLT}
1.80	220	100	1.52	208	100

TABLE NOTES:
1. BOLT FORCES ARE FOR ALLOWABLE STRESS DESIGN.
2. SEE SHEET 1 FOR GENERAL NOTES.
3. P_{BOL} IS APPLIED TO THE LEFT AND RIGHT CONNECTION POINT WITH OPPOSITE SIGN.

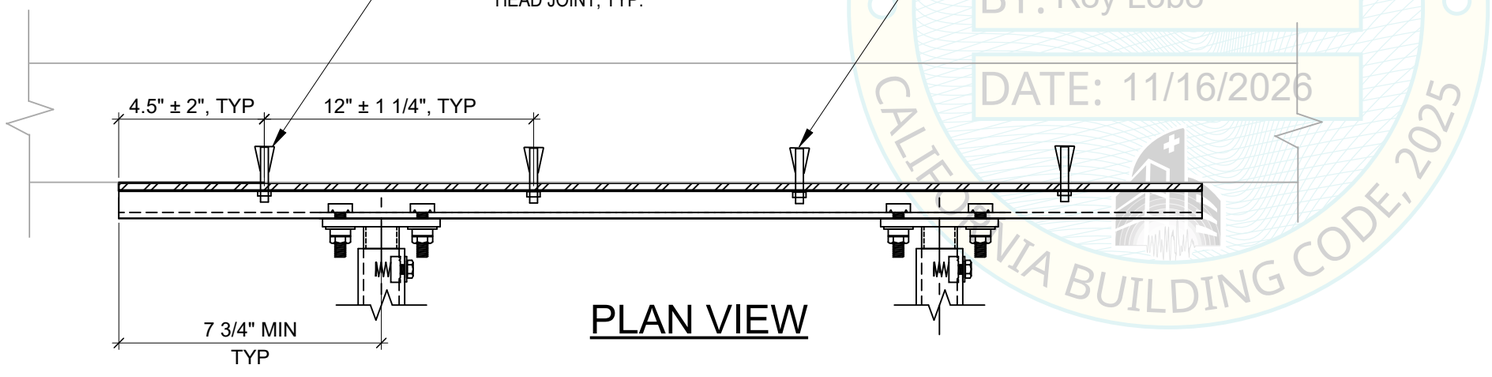

PLAN VIEW

REVIEWED FOR CODE COMPLIANCE
HCAi
OPM-0471
BY: Roy Lobo
DATE: 11/16/2026
CALIFORNIA BUILDING CODE, 2025

Degenkolb
DEGENKOLB ENGINEERS
225 Broadway, Suite 1325
San Diego, CA 92101
619.515.0299 PHONE
www.degenkolb.com
DE Job Number: C6753022.00

REGISTERED PROFESSIONAL ENGINEER
CHAD RAYMOND CLOSS
No. S 5946
STRUCTURAL
STATE OF CALIFORNIA
10/01/2026

ALADDIN TEMP-RITE CONVECT-RITE III
CART MODELS: CR3Cxx, CR3CPOSxx
DOCKING STATION MODELS: CRNDS0, CRNDS1, CRNDS2, CRNDS4

Title: CONNECTION DETAILS

Sheet Number: OPM-0471 S5

Drawn:	AS	Job number:	C6753022.00
Design:	AS	Rev:	
Check:	CRC	Scale:	1 1/2" = 1'-0"
Date	10/02/2026		

OF Sheets