APPLICATION FOR HCAI PREAPPROVAL OF MANUFACTURER'S CERTIFICATION (OPM)

OFFICE USE ONLY

APPLICATION #: OPM-0544

HCAI Preapproval of Manufacturer's Certification (OPM)

Type: ☐ New ☒ Renewal/Update

Manufacturer Information

Manufacturer: Bracelok

Manufacturer's Technical Representative: Scott Simpson

Mailing Address: 12900 Simms Ave, Hawthorne, CA 90250

Telephone: 858-437-6024 Email: scott.simpson@bracelok.com

Product Information

Product Name: Gridlok

Product Type: Suspended Ceiling Brace System

Product Model Number: GRD 10, GRD 10CT, GRD 10P

General Description: Rigid Brace System Designed to be used with suspended ceiling grid systems

REVIEWED FOR CODE COMPLIANCE
HCAI
OPM-0544
BY: Roy Lobo
DATE: 11/01/2026
CALIFORNIA BUILDING CODE

Applicant Information

Applicant Company Name: Bracelok

Contact Person: Scott Simpson

Mailing Address: 12900 Simms Ave, Hawthorne, CA 90250

Telephone: 858-437-6024 Email: scott.simpson@bracelok.com

Title: Technical Director

Registered Design Professonal Preparing Engineering Recommendations

Company Name: DEGENKOLB ENGINEERS

Name: Chad Closs California License Number: S5946

Mailing Address: 225 Broadway, Suite 1325, San Diego, CA 92101

Telephone: (858) 699-5412 Email: ccloss@degenkolb.com

Certification Method

Testing in accordance with: ☐ ICC-ES AC156 ☐ FM 1950 ☐ ASHRAE 171 ☐ FEMA 461

☐ Other(s) (Please Specify):

*Use of criteria other than those adopted by the California Building Standards Code, 2022 (CBSC 2022) for component supports and attachments are not permitted. For distribution system, interior partition wall, and suspended ceiling seismic bracings, test criteria other than those adopted in the CBSC 2022 may be used when approved by HCAI prior to testing.

☐ Analysis

☐ Experience Data

☒ Combination of Testing, Analysis, and/or Experience Data (Please Specify): Previous testing and more recent calculations.

REVIEWED FOR CODE COMPLIANCE
OPM-0544
BY: Roy Lobo
DATE: 11/01/2026
CALIFORNIA BUILDING CODE, 2025

HCAI Approval

Date: 11/1/2026

Name: Roy Lobo Title: Principal Structural Engineer

Condition of Approval (if applicable):

Degenkolb Engineers

225 Broadway, Suite 1325
San Diego, CA 92101-5013
Phone: 619.515.0299
Fax: 619.515.0298

Subject:	Narrative	**Job Number:**	B8769007.01	**Date:**	10/15/2026
Job:	Gridlok	**By:**	AS	**Section:**	1
		Checked By:			

Narrative

The following drawing changes add a second approved anchor manufacturer to OPM-0544. In addition to the existing Hilti anchors, OPM-0544 now permits Simpson Strong-Tie anchors as an alternate. As shown in the OPM-0544 drawings, the Simpson anchors have a deeper embedment and capacities equal to or greater than those of the original design.

Refer to the sample general notes below, which list both manufacturers and their corresponding ICC-ES Evaluation Reports.

II. RESPONSIBILITIES OF THE STRUCTURAL ENGINEER OF RECORD

.
.
.

8. WHEN USING SCREW ANCHOR INTO CMU WALL, SEOR MUST VERIFY:
   a) MASONRY IS NOT CRACKED AS DEFINED IN §2.0 OF ICC-ESR 3056 & ICC-ESR 1056. CALCULATION REQ'D TO SHOW MASONRY WALL WOULD NOT CRACK UNDER THE DESIGN EARTHQUAKE LOADS UNDER ALL SERVICE LOAD CONDITIONS; WALL HAS TO REMAIN ELASTIC.
   b) MASONRY WALL FULLY GROUTED IN ACCORDANCE w/ §4.1 OF ICC-ESR 3056 & ICC-ESR 1056.
   c) LIMITATIONS IN ACCORDANCE w/ §5.0 OF ICC-ESR 3056 & ICC-ESR 1056 IS SATISFIED.

.
.
.

IV. MECHANICAL ANCHORS

1. EXPANSION ANCHORS INTO CONCRETE: HILTI KB-TZ2-CARBON STEEL (ICC ESR-4266) & SIMPSON STRONG-BOLT-CARBON STEEL (ICC-ESR 3037). SCREW ANCHORS INTO CMU: HILTI KH-EZ (ICC ESR-3056) & SIMPSON TITEN-HD (ICC-ESR 1056).

REVIEWED FOR CODE COMPLIANCE
HCAi
BY ROY LOBO
DATE: 11/01/2026
CALIFORNIA BUILDING CODE: 2025

GENERAL NOTES

I. GENERAL

1. THIS HCAI PRE-APPROVAL OF MANUFACTURE 'S CERTIFICATION (OPM) IS BASED ON THE CBC 2025. THE DEMAND (DESIGN FORCES) FOR USE WITH THIS OPM MUST BE BASED ON THE CBC 2025.

2. THIS PRE-APPROVAL IS VALID THROUGHOUT THE STATE OF CALIFORNIA AND IS VALID FOR SUSPENDED ACOUSTICAL TILE, LAY IN PANEL, OR GYPBOARD (NON-ACCESSIBLE) CEILING GRIDS INSTALLED AT THE S_{DS} AND C_{PM} LIMITATIONS AS SHOWN ON SHEETS S3, S3A, OR S3B.

3. THIS PRE-APPROVAL IS LIMITED TO CEILING ASSEMBLIES LISTED IN TABLE 1 ON SHEET S2; HAVING MAXIMUM DEAD WEIGHT OF 4 PSF, INCLUDING LIGHTING FIXTURES (LUMINERIES) AND MECHANICAL SERVICES, EACH WEIGHING LESS THAN 56 LBS AND ATTACHED TO THE CEILING FRAME SYSTEM. HEAVIER SYSTEMS AND THOSE SUPPORTING LATERAL FORCES FROM PARTITION WALLS ARE OUTSIDE THE SCOPE OF THIS OPM.

4. 45-DEGREE FLANGES OF FLY PLATE PIECE (SHEET S9) ALLOWED TO BE BENT IN FIELD ONCE, A MAXIMUM OF 15 DEGREES IN ANY DIRECTION, TO CORRECT ANGLE (SEE SHEET S5 OR S5A.) VERTICAL STRUT ALLOWED TO BE ROTATED (MAXIMUM OF 10 DEGREES) PER GRIDLOK ELEVATION 2/S5 OR 2/S5A. FLY PLATE PIECE VERTICAL FLANGE ALLOWED TO BE BENT IN FIELD ONCE (MAXIMUM OF 10 DEGREES) PER GRIDLOK ELEVATION 1/S5 OR 1/S5A, TO POSITION THE VERTICAL STRUT. IN THE PROCESS OF BENDING, DO NOT DAMAGE OR DEFORM THE MAIN AND/OR CROSS RUNNERS.

II. RESPONSIBILITIES OF THE STRUCTURAL ENGINEER OF RECORD

1. VERIFY MATERIALS AND WORKMANSHIP TO CONFORM WITH THE 2025 EDITION OF THE CALIFORNIA BUILDING CODE AND THE REQUIREMENTS OF THIS PRE-APPROVAL DOCUMENT.
2. VERIFY THE ADEQUACY OF THE EXISTING FRAMING TO SUPPORT THE LOADS INDICATED ON TABLE 1, SHEET S3, S3A, OR S3B, IN ADDITION TO ALL OTHER LOADS.
3. VERIFY ANCHORS ARE AT ADEQUATE DISTANCES FROM OPENINGS AND EDGES OF SLABS AS NOTED IN THE GENERAL NOTES SECTION IV.
4. VERIFY ANCHORS ARE AT ADEQUATE DISTANCES FROM NEW OR EXISTING ANCHORS AS NOTED IN THE GENERAL NOTES SECTION IV.
5. DESIGN ANY SUPPLEMENTARY MEMBERS AND THEIR ATTACHMENTS OTHER THAN THOSE DETAILED WITHIN THIS PRE-APPROVAL.
6. VERIFY THAT THE INSTALLATION IS IN CONFORMANCE WITH THE 2025 CBC AND WITH THE DETAILS SHOWN IN THIS PRE-APPROVAL.
7. VERIFY THAT THE SITE SEISMIC PARAMETERS DON'T EXCEED WHAT IS PERMITTED UNDER THIS OPM.
8. WHEN USING SCREW ANCHOR INTO CMU WALL, SEOR MUST VERIFY:
   a) MASONRY IS NOT CRACKED AS DEFINED IN §2.0 OF ICC-ESR 3056 & ICC-ESR 1056; CALCULATION REQ'D TO SHOW MASONRY WALL WOULD NOT CRACK UNDER THE DESIGN EARTHQUAKE LOADS UNDER ALL SERVICE LOAD CONDITIONS; WALL HAS TO REMAIN ELASTIC.
   b) MASONRY WALL FULLY GROUTED IN ACCORDANCE w/ §4.1 OF ICC-ESR 3056 & ICC-ESR 1056.
   c) LIMITATIONS IN ACCORDANCE w/ §5.0 OF ICC-ESR 3056 & ICC-ESR 1056 IS SATISFIED.

III. COLD-FORMED METAL FRAMING

1. STUDS: ASTM C955 AND ASTM A1003, "C" SHAPED WITH LIPPED FLANGES AND PUNCHED WEB. PROVIDE G60 COATING MINIMUM.
   A. 43 MIL (18 GAGE) AND LIGHTER: GRADE 33 TYPE H
   B. 54 MIL (16 GAGE) AND HEAVIER: GRADE 50 TYPE H STUDS.
2. FRAMING DESIGNATIONS ON PLANS ARE BASED ON THE STEEL STUD MANUFACTURER 'S ASSOCIATION (SSMA) PRODUCT TECHNICAL GUIDE (ICC-ESR-3064P).
3. SHEET METAL SCREWS: SELF-DRILLING, SELF-TAPPING, HDG PER ASTM A153. PAN OR HEX WASHER HEAD AS REQUIRED BY FINISH.
   A. PRODUCTS: ITW-BUILDEX TEKS SELF-DRILLING FASTENERS (ICC-ESR-1976), GRABBER DRIVALL (ICC-ESR-1271) UNLESS OTHERWISE NOTED IN THE FOLLOWING SHEETS
4. POWDER ACTUATED FASTENERS FOR HANGER WIRES: HILTI LOW-VELOCITY FASTENERS (ICC-ESR-2269).

BASE MATERIAL	FASTENERS	MINIMUM EMBEDMENT	MINIMUM EDGE DISTANCE	MINIMUM SPACING
STEEL	HILTI X-U	PER MANUF	1/2"	1"
CONCRETE	HILTI X-U	1"	3"	5 1/2"

WHERE DETAILS REFER TO 0.157" DIAMETER PAF, THE SHOT PINS ARE TO BE PER ESR 1799, 2024, 2138, OR 2269. INSTALL PER ICC REPORT. MIN EMBED IN SAND LIGHT WEIGHT CONCRETE (LWC) OVER METAL DECK AND SOLID NORMAL WEIGHT CONCRETE (NWC) SLAB TO BE 1 1/4". MIN SPACING TO BE 5.1" AND MIN EDGE DISTANCE TO BE 4".

5. PAF FOR HANGER WIRES MUST NOT BE USED IN PRE-STRESSED CONCRETE UNLESS NON-DESTRUCTIVE TESTING METHODS ARE USED TO LOCATE STRAND AND REINFORCEMENT PRIOR TO FASTENER INSTALLATION.

IV. MECHANICAL ANCHORS

1. EXPANSION ANCHORS INTO CONCRETE: HILTI KB-TZ2-CARBON STEEL (ICC ESR-4266) & SIMPSON STRONG-BOLT-CARBON STEEL (ICC-ESR 3037). SCREW ANCHORS INTO CMU: HILTI KH-EZ (ICC ESR-3056) & SIMPSON TITEN-HD (ICC-ESR 1056).
2. INSTALL ANCHORS IN ACCORDANCE WITH LATEST ICC-ESR OR IAPMO REPORT, AS APPLICABLE, AND MANUFACTURER INSTRUCTIONS.
3. IF REINFORCEMENT IS ENCOUNTERED DURING DRILLING, ABANDON AND SHIFT THE HOLE LOCATION TO AVOID THE REINFORCEMENT. PROVIDE A MINIMUM OF 2 ANCHOR DIAMETERS OR 1 INCH, WHICHEVER IS LARGER, OF SOUND CONCRETE BETWEEN THE ANCHOR AND THE ABANDONED HOLE. FILL THE ABANDONED HOLE WITH NON-SHRINK GROUT APPROVED BY THE ENGINEER OF RECORD. NOTIFY THE ENGINEER OF RECORD IF ANY REINFORCING IS DAMAGED.
4. TESING AND INSPECTION OF POST-INSTALLED ANCHORS SHALL BE PERFORMED BY AN APPROVED INDEPENDENT AGENCY EMPLOYED BY THE FACILITY OWNER PER CBC §1704A & §1910A.5, & CAC §7-149. ALL REPORTS SHALL BE SENT TO THE INPSECTOR OF RECORD (IOR), OWNER, AND THE ARCHITECT OR ENGINEER IN RESPONSIBLE CHARGE
5. IF ANY ANCHOR FAILS TESTING, REPLACE ANCHOR AND TEST ADDITIONAL ANCHORS OF THE SAME CATEGORY NOT PREVIOUSLY TESTED UNTIL TWENTY (20) CONSECUTIVE ANCHORS PASS, THEN RESUME INITIAL TESTING FREQUENCY.
6. TEST ANCHORS NO SOONER THAN 24 HOURS AFTER INSTALLATION.
7. ALL EMBEDMENT DEPTHS NOTED ON DRAWINGS ARE EFFECTIVE EMBEDMENT PER MANUFACTURER AND THE APPLICABLE ICC REPORT
8. TEST WEDGE ANCHORS PER THE FOLLOWING METHOD:
   A. TORQUE WRENCH METHOD: TEST ANCHORS TO THE TORQUE LOAD INDICATED IN THE TABLE BELOW WITHIN THE FOLLOWING LIMITS:
      a. ONE-HALF TURN OF THE NUT.

WEDGE	TORQUE LOAD (FT-LBS)	
ANCHOR DIA. (IN)	KB-TZ2	STRONG-BOLT 2
3/8	30	30
1/2	50	60
5/8	40	90

9. TEST SCREW ANCHORS PER THE FOLLOWING METHOD:
   A. DIRECT PULL TENSION TEST. ANCHOR IS ACCEPTABLE IF NO MOVEMENT IS OBSERVED AT THE TEST LOAD GIVEN IN THE TABLE BELOW. MOVEMENT MAY BE DETERMINED WHEN THE WASHER UNDER THE NUT BECOMES LOOSE.

FULLY GROUTED CMU ANCHOR		
ANCHOR DIA. (IN)	KH-EZ TENSION LOAD (LBS)	TITEN-HD TENSION LOAD (LBS)
1/2	2180	1380
5/8	2890	2120

10. FOR POST INSTALLED ANCHORS USED FOR NONSTRUCTURAL APPLICATIONS, 50 PERCENT OR ALTERNATE BOLTS IN A GROUP, INCLUDING AT LEAST ONE-HALF THE ANCHORS IN EACH GROUP, MUST BE TESTED.
11. MINIMUM EDGE DISTANCE: SEE SHEET S11.
12. MINIMUM SPACING (FROM NEW OR EXISTING ADJACENT ANCHORS): SEE SHEETS S11, S12, S12A, S13, AND S13A.

V. STRUCTURAL TESTS, INSPECTIONS, AND OBSERVATIONS

1. AN INDEPENDENT APPROVED TESTING AGENCY AND SPECIAL INSPECTORS, CONFORMING TO 2025 CBC SECTION 1703A, WILL BE RETAINED BY THE OWNER TO PERFORM THE FOLLOWING TESTS AND INSPECTIONS. PROVIDE ACCESS AND FURNISH SAMPLES TO THE AGENCY AS REQUIRED.
2. THE FOLLOWING ITEMS REQUIRE TESTS AND INSPECTIONS IN ACCORDANCE WITH THE REQUIREMENTS OF THE CHAPTER "STRUCTURAL TESTS AND INSPECTIONS" OF THE CODE.
   2.1 MECHANICAL ANCHORS:
      a. VERIFY TYPE OF ANCHOR, ANCHOR DIMENSIONS, CONCRETE TYPE AND COMPRESSIVE STRENGTH, PREDRILLED HOLE DIMENSIONS, ANCHOR SPACING, EDGE DISTANCE, SLAB THICKNESS AND ANCHOR EMBEDMENT.
      b. PROOF-TEST AS INDICATED IN THE MECHANICAL ANCHORS SECTION OF THESE GENERAL NOTES.

VI. DESIGN CRITERIA

1. APPLICABLE CODE: 2025 CALIFORNIA BUILDING CODE.

SEISMIC DESIGN:

SEISMIC FORCE $F_{P\ (LRFD)} = 0.4\ S_{DS}*I_p*W_p*[H_f/R_u]*[C_{AR}/R_{po}]$ $E_{V\ (LRFD)} = 0.2\ S_{DS}*W_p$

WHERE:

S_{DS} = VARIES, WORST CASE ACCEL. SEE SCHEDULE ON SHEET S3, S3A OR S3B

I_p = 1.5

z/h = VARIES

H_f = VARIES, FORCE AMPLIFICATION AS A FUNCTION OF HEIGHT

R_u = VARIES, STRUCTURE DUCTILITY REDUCTION FACTOR

R_{po} = 1.5
Ω_{op} = 2.0
C_{AR} = 1.0
— CEILING

REVIEWED FOR CODE COMPLIANCE HCAI
BY: Roy Lobo
CALIFORNIA BUILDING CODE 2025

REGISTERED PROFESSIONAL ENGINEER
CHAD RAYMOND CLOSS
No. S 5946
Exp. Date
STATE OF CALIFORNIA
SIGNATURE
9/10/2026

DEGENKOLB ENGINEERS
225 Broadway, Suite 1325
San Diego, CA 92101
619.515.0299 PHONE
www.degenkolb.com

GRIDLOK® SUSPENDED CEILING BRACE SYSTEM
OPM-0544

SHEET TITLE:
GENERAL NOTES

Drawn:	JEB	Job number:	B8769007.01
Design:	PGM/LH	Rev:	
Check:	CC	Scale:	NTS
Date	09/09/2026		

Sheet Number S1

OF Sheets

OPM-0544: Reviewed for Code Compliance by Roy Lobo

GENERAL NOTES, CONT

VII. HOW TO USE THIS PRE-APPROVAL

1. REVIEW AND UNDERSTAND ALL GENERAL NOTES AND FIGURES BEFORE PROCEEDING.

2. SELECT A GRIDLOK CLIP TO MATCH THE CEILING GRID ICC REPORT PER SHEET S2.

3. DETERMINE THE MAXIMUM ALLOWABLE GRIDLOK SPACING BASED ON THE SITE SEISMICITY (S_{DS}) FROM TABLE 1 ON SHEET S3 OR S3B.

   A. IF ADVANCESPAN CEILING SYSTEM WAS SELECTED IN STEP 2, DETERMINE MAXIMUM ALLOWABLE GRIDLOK SPACING BASED ON THE SITE SEISMICITY (S_{DS}) FROM TABLE 1 ON SHEET S3A.
   B. FOR CORRIDOR CEILINGS, MAXIMUM ALLOWABLE GRIDLOK SPACING PER SHEET S3C

4. BASED ON THE PLENUM HEIGHT 'H' (DISTANCE FROM BOTTOM OF DECK TO BOTTOM OF CEILING) , AND THE CHOSEN GRIDLOK SPACING CHOSEN ON STEP 3 ABOVE, SELECT BRACE SIZE PER TABLE 1 ON SHEET S4A. BRACE STUDS MUST NOT BE REPLACED BY WIRE. IF FLYPLATE CLIP 45-DEGREE FLANGES ARE BENT TO ACCOMMODATE BRACE ANGLES ('Θ') DIFFERENT THAN 45°, SELECT BRACE SIZE PER TABLE 1 ON SHEET S4B. TABLE 1 ON S4B IS APPLICABLE TO ALL BRACE ANGLES FROM 30 TO 60 DEGREES.

5. BASED ON THE PLENUM HEIGHT 'H' (DISTANCE FROM BOTTOM OF DECK TO BOTTOM OF CEILING) , AND THE CHOSEN GRIDLOK SPACING CHOSEN ON STEP 3 ABOVE, SELECT VERTICAL STRUT SIZE PER TABLE 2 ON SHEET S4A. VERTICAL STRUTS MUST NOT BE REPLACED BY WIRE. IF FLYPLATE CLIP VERTICAL FLANGE IS BENT TO ACCOMMODATE BRACE ANGLES ('Θ') DIFFERENT THAN 45°, SELECT VERTICAL STRUT SIZE PER TABLE 2 ON SHEET S4B. TABLE 2 ON S4B IS APPLICABLE TO ALL BRACE ANGLES FROM 30 TO 60 DEGREES.

6. BASED ON THE DECK TYPE SELECT THE APPROPRIATE CONNECTION TO THE SUPPORTING STRUCTURE ABOVE PER TABLE 1 ON SHEET S4 OR S4C.

7. RDP TO DETERMINE THE IMPACT ON THE EXISTING STRUCTURE FROM THE GRIDLOK BASED ON THE PROVIDED 'F' ASD FORCE ON TABLE 1 ON SHEET S3, S3A, OR S3B.

SHEET LIST

S1	GENERAL NOTES	S5A	GRIDLOK ELEVATIONS FOR GYPBOARD CEILINGS WITH C AND FURRING CHANNEL FRAMING (GRIDLOK 10D)
S2	GENERAL NOTES AND SCHEDULES	S6	GRIDLOK-10P ASSEMBLY DETAILS
S3	GENERAL PLAN AND SCHEDULES FOR ACOUSTICAL TILE & LAY-IN PANEL CEILINGS AND GYPBOARD CEILINGS	S6A	GRIDLOK-GRD-10D ASSEMBLY DETAILS (GRIDLOK 10D)
S3A	GENERAL PLAN AND SCHEDULES FOR ADVANCESPAN CEILING SYSTEM AT CORRIDORS	S7	GRIDLOK-10 ASSEMBLY DETAILS
S3B	GENERAL PLAN AND SCHEDULES FOR GYPBOARD CEILINGS WITH C AND FURRING CHANNEL FRAMING (GRIDLOK 10D)	S8	GRIDLOK-10CT ASSEMBLY DETAILS
S3C	GENERAL PLAN FOR ACOUSTICAL TILE & LAY-IN PANEL CEILINGS AT CORRIDORS	S9	GRIDLOK PARTS
S4	3D SECTION AND CONNECTION SCHEDULE FOR ACOUSTICAL TILE & LAY-IN PANEL CEILINGS AND GYPBOARD CEILINGS	S9A	GRIDLOK PARTS (GRIDLOK 10D)
S4A	SCHEDULES FOR 'Θ' = 45°	S10	GRIDLOK PARTS
S4B	SCHEDULES FOR 'Θ' DIFFERENT THAN 45°	S10A	GRIDLOK PARTS
S4C	3D SECTION AND CONNECTION SCHEDULE FOR GYPBOARD CEILINGS WITH C AND FURRING CHANNEL FRAMING (GRIDLOK 10D)	S10B	GRIDLOK PARTS
S5	GRIDLOK ELEVATIONS FOR ACOUSTICAL TILE & LAY-IN PANEL CEILINGS AND GYPBOARD CEILINGS	S11	CONNECTION DETAILS TO CONCRETE SLAB
		S12	CONNECTION DETAILS TO COMD (W DECK)
		S12A	CONNECTION DETAILS TO COMD (W DECK)
		S13	CONNECTION DETAILS TO COMD (B DECK)
		S13A	CONNECTION DETAILS TO COMD (B DECK)
		S14	CONNECTION DETAILS TO STEEL BEAM
		S15	CONNECTION DETAILS TO WOOD
		S15A	WALL CONNECTION DETAILS
		S15B	WALL CONNECTION DETAILS (ALTERNATE CONNECTION ABOVE GRIDLOK)
		S16	ADVANCESPAN CHANNEL ASSEMBLY
		S17	OPD-0002-13 DETAILS (CL2.50, CL2.60) FOR ACOUSTICAL TILE & LAY-IN PANEL CEILINGS AND GYPBOARD CEILINGS
		S17A	OPD-0003-13 DETAILS (CG0.01, CG0.02) FOR GYPBOARD CEILINGS WITH C AND FURRING CHANNEL FRAMING
		S17B	OPD-0003-13 DETAILS (CG0.03, CG0.04) FOR GYPBOARD CEILINGS WITH C AND FURRING CHANNEL FRAMING
		S17C	OPD-0003-13 DETAILS (CG2.30, CG2.31) FOR GYPBOARD CEILINGS WITH C AND FURRING CHANNEL FRAMING
		S17D	OPD-0003-13 DETAILS (CG2.32) FOR GYPBOARD CEILINGS WITH C AND FURRING CHANNEL FRAMING
		S18	OPD-0002-13 DETAILS (CL0.02, CL4.10)
		S19	OPD-0002-13 DETAILS (CL4.21, CL4.22)
		S20	OPD-0002-13 DETAILS (CL4.23, CL4.24)
		S21	OPD-0002-13 DETAILS (CL4.25, CL2.40)

TABLE 1: GRIDLOK ASSEMBLY SCHEDULE

CEILING GRID ASSEMBLY INCLUDING CORRIDORS [3, 4, 5]	CEILING TYPE [6]	ICC-ESR REPORT	GRIDLOK ASSEMBLY	ASSEMBLY DETAIL
WORTHINGTON ARMSTRONG VENTURE	LAY-IN PANEL	1308	GRIDLOK-10P	1/S6
	GYPBOARD	1289		
USG INTERIORS, LLC	LAY-IN PANEL	1222	GRIDLOK-10	1/S7
	GYPBOARD	4358		
CERTAINTEED CEILIINGS CORPORATION	LAY-IN PANEL	3336	GRIDLOK-10CT	1/S8
	GYPBOARD	3336		
ADVANCESPAN CEILING SYSTEM AT CORRIDORS (MAIN RUNNERS: DXAS, DXTAS CROSS RUNNERS: DX216, DX424/DX422, DXT424/DXT422/DXT222 CHANNEL ASSEMBLY: US44)	LAY-IN PANEL GRID CEILINGS	N/A	GRIDLOK-10	1/S7
TYPICAL CEILING WITH C CHANNELS AND FURRING CHANNELS, PER DETAIL 1/S4C	GYPBOARD FRAMED CEILINGS	N/A	GRIDLOK-10D	1/S6A

TABLE 1 NOTES:

1. CEILING GRID CONFIGURATIONS, COMPONENTS, CONNECTIONS, ACCESSORIES, AND INSTALLATION DETAILS PERMITTED BY THE APPLICABLE ICC-ES REPORT LISTED IN TABLE 1 ARE PERMITTED FOR USE WITH THE CORRESPONDING GRIDLOK ASSEMBLY, PROVIDED THEY COMPLY WITH THE LIMITATIONS AND REQUIREMENTS OF THIS OPM. WHERE A REQUIREMENT OF THIS OPM DIFFERS FROM OR IS MORE RESTRICTIVE THAN THE APPLICABLE ICC-ES REPORT, THE REQUIREMENTS OF THIS OPM SHALL GOVERN.
2. ONLY CEILING GRIDS THAT MEET THE ICC REPORTS LISTED ABOVE ARE APPROVED FOR USE WITH THIS OPM. MATCH GRIDLOK ASSEMBLY CLIP WITH CEILING GRID ASSEMBLY PER TABLE ABOVE.
3. THE CEILING SYSTEMS ARE LIMITED TO INTERIOR APPLICATIONS.
4. ONLY HEAVY-DUTY MAIN TEES AS DEFINED IN ASTM SPECIFICATION C635 SHALL BE USED (DIRECT HUNG, U.N.O.; MIN LOAD CARRYING CAPABILITY = 16.0 PLF; CEILING LOAD = 4 PSF), UNLESS OTHERWISE NOTED
5. THE MAIN RUNNERS AND CROSS RUNNERS OF THE CEILING SYSTEM AND THEIR SPLICES, INTERSECTION CONNECTORS, AND EXPANSION DEVICES SHALL BE DESIGNED & CONSTRUCTED TO CARRY A MEAN ULTIMATE TEST LOAD OF NOT LESS THAN 270 LBS IN COMPRESSION AND IN TENSION WHEN TESTED FOR TEST METHODS PER ASTM E3090/E3090M. THE TENSILE TEST SHALL ALLOW FOR A 5° OFFSET OF THE CONNECTION IN ANY DIRECTION. THE CONNECTORS AT SPLICES AND INTERSECTIONS SHALL BE THE MECHANICAL LOCKING TYPE.
6. MIN ALLOWABLE UNIFORM LOAD CARRYING CAPACITY = 16 PLF; MAX TOTAL WEIGHT PERMITTED IS LIMITED TO 4.0 PSF
7. WHERE GYPBOARD CEILINGS ARE USED, ATTACH GYPBOARD TO MAIN RUNNER OR FURRING CHANNEL WITH NO 6 TYPE S SCREWS @ 12" OC MAX IN ACCORDANCE WITH ASTM C840.

REVIEWED FOR CODE COMPLIANCE
HCAI
OPM-0544
BY: ROY LOBO
DATE: 9/10/2026
OSHPD CALIFORNIA BUILDING CODE 2025

REGISTERED PROFESSIONAL ENGINEER
CHAD RAYMOND CLOSS
No. S 5946
Exp. Date
9/10/2026
STRUCTURAL
STATE OF CALIFORNIA

DEGENKOLB ENGINEERS
225 Broadway, Suite 1325
San Diego, CA 92101
619.515.0299 PHONE
www.degenkolb.com

GRIDLOK® SUSPENDED CEILING BRACE SYSTEM
OPM-0544

SHEET TITLE:
GENERAL NOTES AND SCHEDULES

Drawn:	JEB	Job number:	B8769007.01
Design:	PGM/LH	Rev:	
Check:	CC	Scale:	NTS
Date	9/10/2026		

Sheet Number S2
OF Sheets

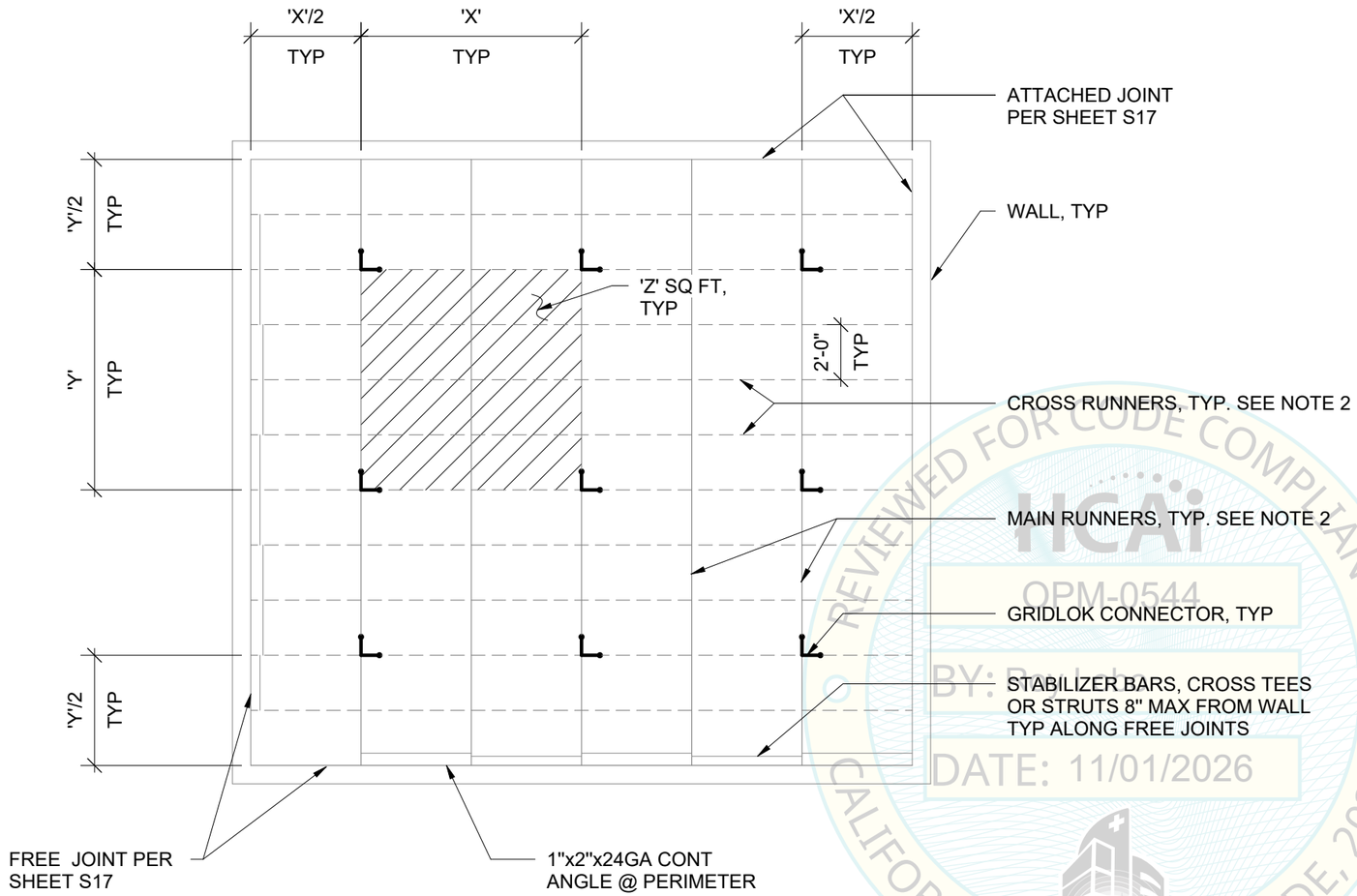

NOTES:
1. SEE TABLE 1 FOR ALLOWABLE S_{DS} AND C_{PM} VALUES FOR DIFFERENT VAULES OF 'X' 'Y' AND 'Z'.
2. ONLY MAIN AND CROSS RUNNERS PER APPROVED CEILING GRID ASSEMBLIES LISTED ON TABLE 1 OF SHEET S2
3. 'X'/2 = HALF OF 'X' VALUE AS PER TABLE 1
4. 'Y'/2 = HALF OF 'Y' VALUE AS PER TABLE 1

1 SUSPENDED LAY IN PANEL AND GYPBOARD GRID BRACING PLAN VIEW

1/8" = 1'-0"

TABLE 1: GRIDLOK SPACING SCHEDULE

C_{PM}	S_{DS}	'X' MAX	'Y' MAX	'Z' MAX	'F' ASD (LBS)
0.51	**0.25 - 1.00**	12'-0"	12'-0"	144 SF	291 LB
0.69	**1.00 - 1.38**	12'-0"	12'-0"	144 SF	400 LB
1.00	**1.39 - 2.00**	12'-0"	8'-0"	96 SF	387 LB
1.26	**2.01 - 2.50**	8'-0"	8'-0"	64 SF	323 LB

TABLE 1 NOTES:

1. TABLE 1 ABOVE MAY BE USED FOR ALL FLOOR ELEVATIONS (z/h) IN A BUILDING, WHERE 'z' IS THE ELEVATION OF THE FLOOR AND 'h' IS THE ELEVATION OF THE ROOF, BOTH WITH RESPECT TO GRADE LEVEL.
2. MAXIMUM ALLOWABLE BRACE SPACING FOR DIFFERENT VALUES OF S_{DS} AND C_{PM} ARE BASED ON A MAXIMUM ALLOWABLE (ASD) GRIDLOK SYSTEM CAPACITY OF 400 LB.
3. 'F' REFERS TO THE MAXIMUM ALLOWABLE DESIGN HORIZONTAL LOAD (ASD) FOR THE SEISMICITY AND SPACING INDICATED
4. FOR GYPBOARD CEILING GRID ASSEMBLIES FOR USG INTERIORS, LLC (ICC-ESR 4358), WHERE ALTERNATE INSTALLATION ARE USED, ONLY ALTERNATE CONDITION 1 IS ALLOWED WITH MAX S_{DS} = 2.0 AND MAX C_P = 1.00. RDP TO VERIFY OTHER CONDITIONS

REVIEWED FOR CODE COMPLIANCE
HCAI
OPM-0544
BY: Reviewer
DATE: 11/01/2026
CALIFORNIA BUILDING CODE, 2025

REGISTERED PROFESSIONAL ENGINEER
CHAD RAYMOND CLOSS
No. S 5946
Exp. Date
11/01/2026
STATE OF CALIFORNIA
STRUCTURAL

DEGENKOLB ENGINEERS
225 Broadway, Suite 1325
San Diego, CA 92101
619.515.0299 PHONE
www.degenkolb.com

GRIDLOK® SUSPENDED CEILING BRACE SYSTEM
OPM-0544

SHEET TITLE:
GENERAL PLAN AND SCHEDULES FOR ACOUSTICAL TILE & LAY-IN PANEL CEILINGS AND GYPBOARD CEILINGS

Drawn:	JEB	Job number:	B8769007.01
Design:	PGM/LH	Rev:	
Check:	CC	Scale:	NTS
Date	9/10/2026		

Sheet Number S3 OF Sheets

OPM-0544: Reviewed for Code Compliance by Roy Lobo

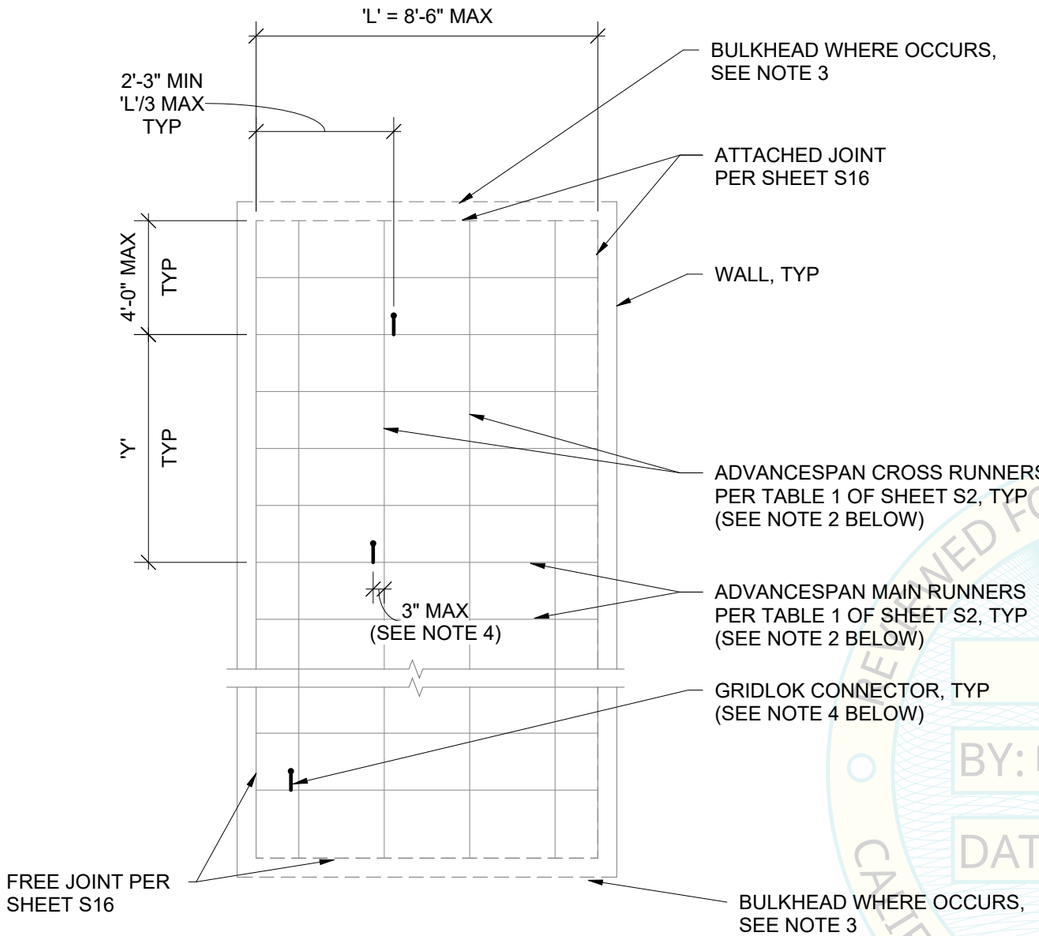

NOTES:

1. SEE TABLE 1 FOR ALLOWABLE S_{DS} AND C_{PM}VALUES FOR VALUES OF 'Z'.
2. RDP TO COORIDNATE SPACING OF MAIN AND CROSS RUNNERS AT CORRIDOR
3. RDP IS RESPONSIBLE FOR THE DESIGN OF THE BULKHEADS, IF ANY
4. LOCATE GRIDLOK ALONG MAIN RUNNER BETWEEN 2'-3" AND 'L'/3 FROM THE FREE EDGE AND WITHIN 3" FROM THE INTERSECTION OF THE MAIN AND CROSS RUNNERS TO THE CENTER OF GRIDLOK CLIP.
5. 'X'/2 = HALF OF 'X' VALUE AS PER TABLE 1
6. 'Y'/2 = HALF OF 'Y' VALUE AS PER TABLE 1

1 SUSPENDED CEILING GRID BRACING PLAN VIEW FOR ADVANCESPAN CEILING SYSTEM

1/8" = 1'-0"

TABLE 1: GRIDLOK SPACING SCHEDULE FOR ADVANCESPAN

C_{PM}	S_{DS}	'Y' MAX	'F' ASD (LBS)
0.53	**0.25 - 2.00**	12'-0"	308 LB
>0.53	**2.01 - 2.50**	N/A FOR ADVANCESPAN	

TABLE 1 NOTES:

1. TABLE 1 ABOVE MAY BE USED FOR ALL FLOOR ELEVATIONS (z/h) IN A BUILDING, WHERE 'z' IS THE ELEVATION OF THE FLOOR AND 'h' IS THE ELEVATION OF THE ROOF, BOTH WITH RESPECT TO GRADE LEVEL.
2. MAXIMUM ALLOWABLE BRACE SPACING FOR DIFFERENT VALUES OF S_{DS} AND C_{PM} ARE BASED ON A MAXIMUM ALLOWABLE (ASD) GRIDLOK SYSTEM CAPACITY OF 400 LB.
3. 'F' REFERS TO THE MAXIMUM ALLOWABLE (ASD) HORIZONTAL FORCE APPLIED TO THE GRIDLOK CONNECTOR FOR THE SEISMICITY AND SPACING INDICATED.
4. FOR ADVANCESPAN CEILING SYSTEMS, ONLY ONE GRIDLOK BRACE PARALLEL TO THE CROSS RUNNERS PER GRIDLOK IS REQUIRED. A GRIDLOK BRACE PARALLEL TO THE MAIN RUNNERS IS NOT REQUIRED. ONE VERTICAL STRUT IS REQUIRED AT EVERY GRIDLOK.
5. SELECT BRACE AND STRUT SIZES PER SHEET S2 NOTES VII.4 AND VII.5, RESPECTIVELY.

REVIEWED FOR CODE COMPLIANCE
HCAi
OPM-0544
BY: Roy Lobo
DATE: 11/01/2026
CALIFORNIA BUILDING CODE, 2025



DEGENKOLB ENGINEERS
225 Broadway, Suite 1325
San Diego, CA 92101
619.515.0299 PHONE
www.degenkolb.com

GRIDLOK® SUSPENDED CEILING BRACE SYSTEM
OPM-0544

SHEET TITLE:
GENERAL PLAN AND SCHEDULES FOR ADVANCESPAN CEILING SYSTEM AT CORRIDORS

Drawn:	JEB	Job number:	B8769007.01
Design:	JEL	Rev:	
Check:	CC	Scale:	
Date	9/10/26		

Sheet Number S3A

OF Sheets

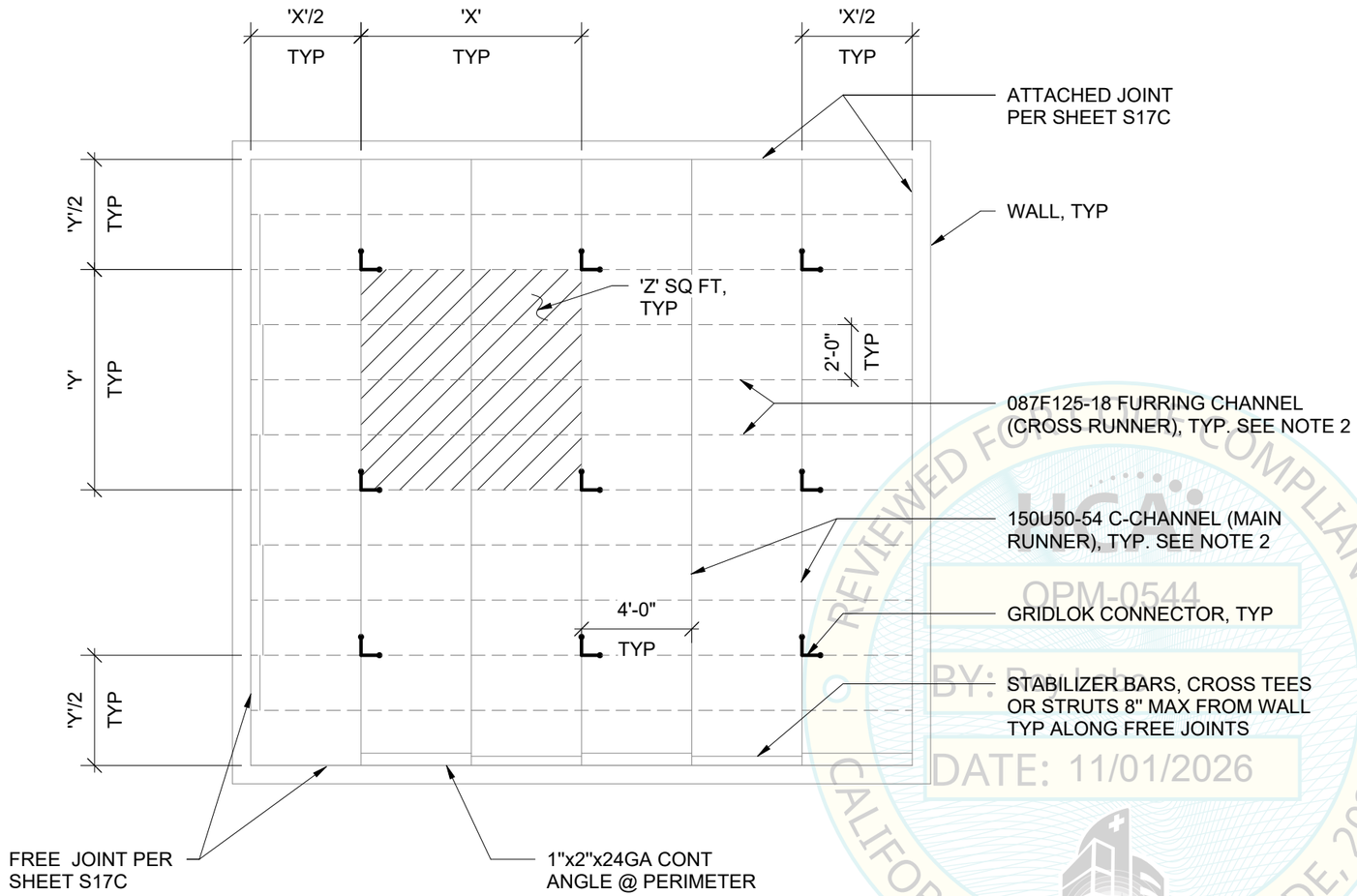

NOTES:
1. SEE TABLE 1 FOR ALLOWABLE S_{DS} AND C_{PM} VALUES FOR DIFFERENT VAULES OF 'X' 'Y' AND 'Z'.
2. MAIN RUNNER AND CROSS RUNNER PER ICC ESR-3064P. SEE SHEET S17A
3. WHEN SUMMATION OF DEAD LOAD EXCEEDS 4.0 PSF, SUSPENDED GYPBOARD CEILING FRAMING SYSTEM MUST BE APPROVED ON PROJECT SPECIFIC BASIS OR PREAPPROVED BY HCAI.
4. 'X'/2 = HALF OF 'X' VALUE AS PER TABLE 1
5. 'Y'/2 = HALF OF 'Y' VALUE AS PER TABLE 1

1 GYPBOARD CEILING WITH C AND FURRING CHANNEL FRAMING PLAN VIEW (GRIDLOK 10D)

N.T.S.

TABLE 1: GRIDLOK SPACING SCHEDULE

C_{PM}	S_{DS}	'X' MAX	'Y' MAX	'Z' MAX	'F' ASD (LBS)
0.51	**0.25 - 1.00**	12'-0"	12'-0"	144 SF	291 LB
0.69	**1.00 - 1.38**	12'-0"	12'-0"	144 SF	400 LB
1.00	**1.39 - 2.00**	12'-0"	8'-0"	96 SF	387 LB
1.26	**2.01 - 2.50**	8'-0"	8'-0"	64 SF	323 LB

TABLE 1 NOTES:

1. TABLE 1 ABOVE MAY BE USED FOR ALL FLOOR ELEVATIONS (z/h) IN A BUILDING, WHERE 'z' IS THE ELEVATION OF THE FLOOR AND 'h' IS THE ELEVATION OF THE ROOF, BOTH WITH RESPECT TO GRADE LEVEL.
2. MAXIMUM ALLOWABLE BRACE SPACING FOR DIFFERENT VALUES OF S_{DS} AND C_{PM} ARE BASED ON A MAXIMUM ALLOWABLE (ASD) GRIDLOK SYSTEM CAPACITY OF 400 LB.
3. 'F' REFERS TO THE MAXIMUM ALLOWABLE DESIGN HORIZONTAL LOAD (ASD) FOR THE SEISMICITY AND SPACING INDICATED

REVIEWED FOR CODE COMPLIANCE
UCA
OPM-0544
BY: Reviewer
DATE: 11/01/2026
CALIFORNIA BUILDING CODE, 2025

REGISTERED PROFESSIONAL ENGINEER
CHAD RAYMOND CLOSS
No. S 5946
Exp. Date
11/30/2026
STRUCTURAL
STATE OF CALIFORNIA

DEGENKOLB ENGINEERS
225 Broadway, Suite 1325
San Diego, CA 92101
619.515.0299 PHONE
www.degenkolb.com

GRIDLOK® SUSPENDED CEILING BRACE SYSTEM
OPM-0544

SHEET TITLE:
GENERAL PLAN AND SCHEDULES FOR GYPBOARD CEILINGS WITH C AND FURRING CHANNEL FRAMING (GRIDLOK 10D)

Drawn:	JEB	Job number:	B8769007.01
Design:	PGM	Rev:	
Check:	CC	Scale:	NTS
Date	9/10/2026		

Sheet Number S3B

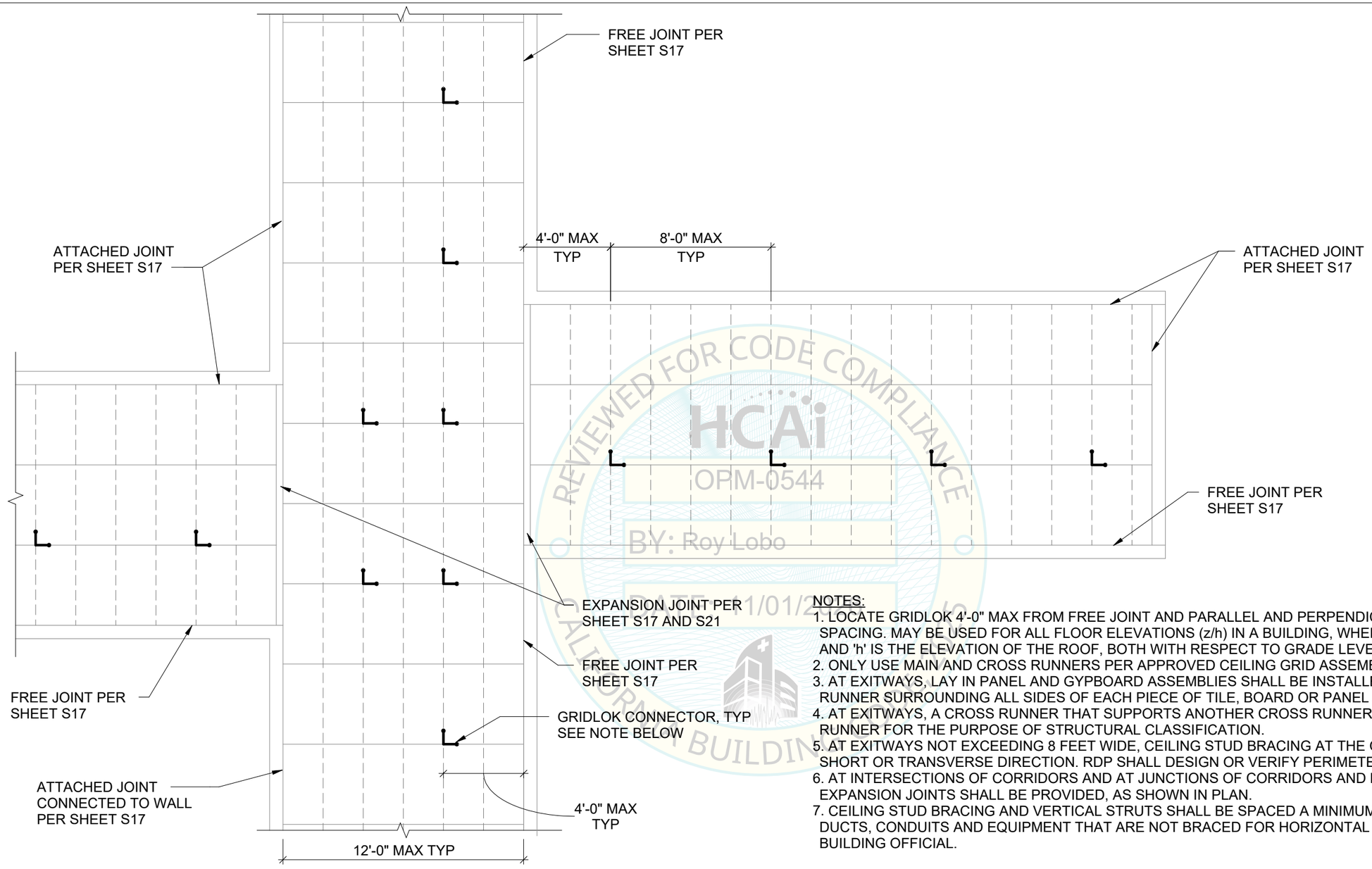

REVIEWED FOR CODE COMPLIANCE
HCAi
OPM-0544
BY: Roy Lobo
DATE: 11/01/2025
CALIFORNIA BUILDING

NOTES:

1. LOCATE GRIDLOK 4'-0" MAX FROM FREE JOINT AND PARALLEL AND PERPENDICULAR TO THE WALL AT 8'-0" MAX O.C. SPACING. MAY BE USED FOR ALL FLOOR ELEVATIONS (z/h) IN A BUILDING, WHERE 'z' IS THE ELEVATION OF THE FLOOR AND 'h' IS THE ELEVATION OF THE ROOF, BOTH WITH RESPECT TO GRADE LEVEL.
2. ONLY USE MAIN AND CROSS RUNNERS PER APPROVED CEILING GRID ASSEMBLIES LISTED ON TABLE 1 OF SHEET S2.
3. AT EXITWAYS, LAY IN PANEL AND GYPBOARD ASSEMBLIES SHALL BE INSTALLED WITH A MAIN RUNNER OR CROSS RUNNER SURROUNDING ALL SIDES OF EACH PIECE OF TILE, BOARD OR PANEL AND EACH LIGHT FIXTURE OR GRILLE.
4. AT EXITWAYS, A CROSS RUNNER THAT SUPPORTS ANOTHER CROSS RUNNER SHALL BE CONSIDERED A MAIN RUNNER FOR THE PURPOSE OF STRUCTURAL CLASSIFICATION.
5. AT EXITWAYS NOT EXCEEDING 8 FEET WIDE, CEILING STUD BRACING AT THE GRIDLOK CLIP MAY BE OMITTED IN THE SHORT OR TRANSVERSE DIRECTION. RDP SHALL DESIGN OR VERIFY PERIMETER WALLS FOR THE CEILING LOADS.
6. AT INTERSECTIONS OF CORRIDORS AND AT JUNCTIONS OF CORRIDORS AND LOBBIES OR OTHER SIMILAR AREAS, EXPANSION JOINTS SHALL BE PROVIDED, AS SHOWN IN PLAN.
7. CEILING STUD BRACING AND VERTICAL STRUTS SHALL BE SPACED A MINIMUM OF 6 INCHES FROM ALL PIPES, DUCTS, CONDUITS AND EQUIPMENT THAT ARE NOT BRACED FOR HORIZONTAL FORCES, UNLESS APROVED BY THE BUILDING OFFICIAL.

1 SUSPENDED LAY IN PANEL AND GYPBOARD GRID BRACING PLAN VIEW AT CORRIDORS

N.T.S.

REGISTERED PROFESSIONAL ENGINEER
CHAD RAYMOND CLOSS
No. S 5946
Exp. Date
STRUCTURAL
STATE OF CALIFORNIA
9/10/2026

DEGENKOLB ENGINEERS
225 Broadway, Suite 1325
San Diego, CA 92101
619.515.0299 PHONE
www.degenkolb.com

GRIDLOK® SUSPENDED CEILING BRACE SYSTEM
OPM-0544

SHEET TITLE:
GENERAL PLAN FOR ACOUSTICAL TILE & LAY-IN PANEL CEILINGS AT CORRIDORS

Drawn:	MLJ	Job number:	B8769007.01
Design:	PGM	Rev:	
Check:	CC	Scale:	NTS
Date	9/10/2026		

Sheet Number S3C
OF Sheets

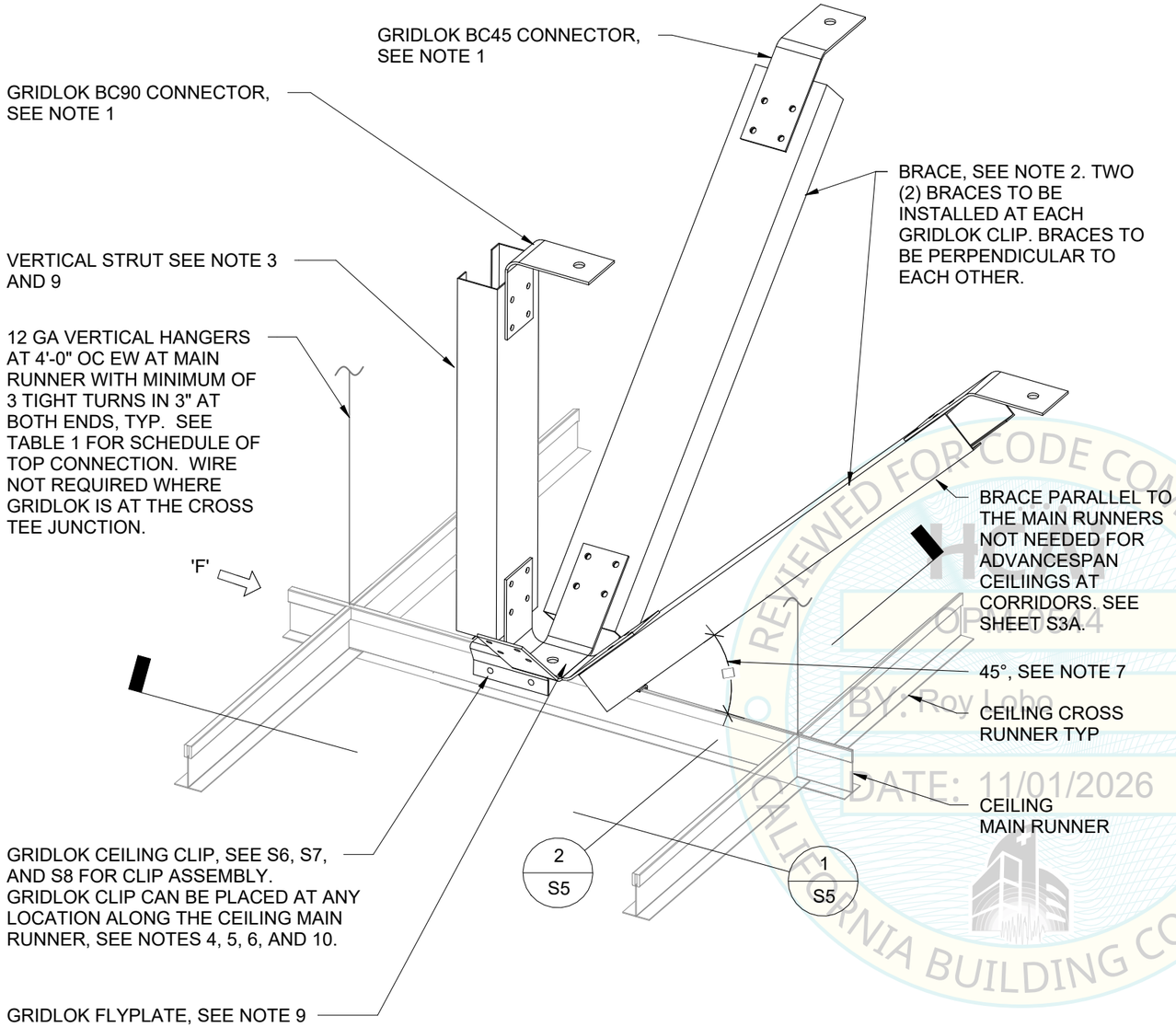

1 GRIDLOK LAY-IN PANEL AND GYPBOARD GRID ASSEMBLY (ISOMETRIC)

NTS

TABLE 1: GRIDLOK CONNECTION SCHEDULE		
STRUCTURAL CONDITION OF FLOOR/ROOF ABOVE SUSPENDED CEILING	**HANGER WIRE DETAIL**	**BC45 BRACE AND BC90 STRUT TOP CONNECTION DETAIL**
CONCRETE SLAB, BEAM, OR JOIST	2/S18	1/S11
CONCRETE OVER W DECK	1/S18	1/S12, 2/S12,1/S12A, 2/S12A
CONCRETE OVER B DECK	1/S18	1/S13, 2/S/13, 1/S13A, 2/S/13A
STRUCTURAL STEEL	1/S20	1/S14
SAWN TIMBER	2/S20	1/S15

NOTES:

1. SEE TABLE 1 FOR SCHEDULE OF CONNECTION DETAIL OF GRIDLOK BC45 AND BC90 CONNECTORS TO THE FLOOR ABOVE FOR DIFFERENT STRUCTURAL SYSTEMS.
2. SEE TABLE 1 ON S4A FOR SCHEDULE OF PLENUM HEIGHT 'H' BASED ON BRACE ANGLE, ' Θ' = 45 DEGREES, BRACE SIZE AND CHOSEN GRIDLOK SPACING. IF ALTERNATIVE BRACE ANGLE ' Θ' USED PER NOTE 7, SEE TABLE 1 ON S4B.
3. SEE TABLE 2 ON S4A FOR SCHEDULE OF PLENUM HEIGHT 'H' BASED ON BRACE ANGLE, ' Θ' = 45 DEGREES, VERTICAL STRUT SIZE AND CHOSEN GRIDLOK SPACING. IF ALTERNATIVE BRACE ANGLE ' Θ' USED PER NOTE 7, SEE TABLE 2 ON S4B.
4. THE GRIDLOK ASSEMBLY CAN BE PLACED ANYWHERE ALONG THE MAIN RUNNER.
5. THE GRIDLOK FLY-PLATE CAN BE ROTATED AT ANY ANGLE, FROM 0 TO 360 DEGREES, WHEN THE CENTERLINE OF THE GRIDLOK IS WITHIN 3" FROM THE INTERSECTION OF THE MAIN AND CROSS RUNNERS.
6. THE GRIDLOK FLY-PLATE PIECE CAN BE ROTATED IN 90-DEGREE INTERVALS PROVIDED THE BRACES ARE ALIGNED WITH THE MAIN AND CROSS RUNNERS.
7. 45-DEGREE FLY PLATE PIECE ALLOWED TO BE BENT IN FIELD ONCE, A MAXIMUM OF 15 DEGREES IN ANY DIRECTION, TO CORRECT ANGLE, NO REBENDING.
8. VERTICAL STRUT ALLOWED TO BE ROTATED A MAXIMUM OF 10 DEGREES PER GRIDLOK ELEVATION 2/S5.
9. VERTICAL PORTION OF FLY PLATE PIECE ALLOWED TO BE BENT IN FIELD ONCE PER GRIDLOK ELEVATION 1/S5, TO POSITION THE VERTICAL STRUT, A MAXIMUM OF 10 DEGREES, NO REBENDING.
10. FOR ADVANCESPAN CEILINGS (SEE SHEET S3A), LOCATE GRIDLOK ALONG MAIN RUNNER AND WITHIN 3" FROM THE INTERSECTION OF THE MAIN AND CROSS RUNNERS.

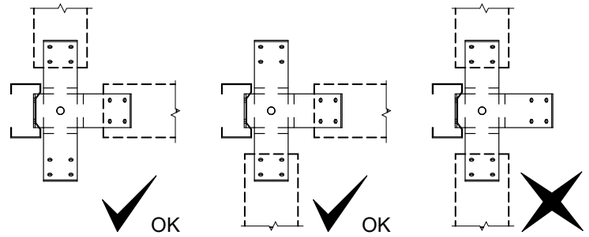

3 2-DIRECTION BRACE LAYOUT ARRANGEMENTS (PLAN VIEW)

N.T.S.

REVIEWED FOR CODE COMPLIANCE
OPM-0544
BY: Roy Lobo
DATE: 11/01/2026
CALIFORNIA BUILDING CODE

REGISTERED PROFESSIONAL ENGINEER
CHAD RAYMOND CLOSS
No. S 5946
Exp. Date
11/01/2026
STRUCTURAL
STATE OF CALIFORNIA

DEGENKOLB ENGINEERS
225 Broadway, Suite 1325
San Diego, CA 92101
619.515.0299 PHONE
www.degenkolb.com

GRIDLOK® SUSPENDED CEILING BRACE SYSTEM
OPM-0544

SHEET TITLE:
3D SECTION AND CONNECTION SCHEDULE FOR ACOUSTICAL TILE & LAY-IN PANEL CEILINGS AND GYPBOARD CEILINGS

Drawn:	JEB	Job number:	B8769007.01
Design:	PGM	Rev:	
Check:	CC	Scale:	NTS
Date	9/102026		

Sheet Number S4 OF Sheets

TABLE 1: MAXIMUM PLENUM HEIGHT 'H' FOR DIFFERENT BRACE SIZES, BRACE ANGLE 'Θ' = 45 DEGREES, AND S_{DS} VALUES						
GRIDLOK SPACING	C_{PM}	BRACE SIZE / S_{DS}	250S125-33	250S162-33	362S162-33	(2) 250S162-33 BACK-TO-BACK
12'-0"x12'-0"	0.51	0.25 - 1.00	4'-6"	6'-0"	7'-6"	9'-6"
12'-0"x12'-0"	0.69	1.01 - 1.38	N/A	5'-0"	6'-6"	
8'-0"x12'-0"	1.00	1.39 - 2.00	N/A	5'-0"	6'-6"	
8'-0"x8'-0"	1.26	2.01 - 2.50	N/A	5'-6"	7'-6"	
ADVANCESPAN (SEE S3A)	0.53	0.25 - 2.00	N/A	5'-0"	6'-6"	

TABLE 2: MAXIMUM PLENUM HEIGHT 'H' FOR DIFFERENT VERTICAL STRUT SIZES, BRACE ANGLE 'Θ' = 45 DEGREES, AND S_{DS} VALUES					
GRIDLOK SPACING	C_{PM}	VERTICAL STRUT SIZE / S_{DS}	250S125-33	250S162-33	362S162-33
12'-0"x12'-0"	0.51	0.25 - 1.00	7'-0"	9'-6"	9'-6"
12'-0"x12'-0"	0.69	1.01 - 1.38	6'-6"	8'-0"	
8'-0"x12'-0"	1.00	1.39 - 2.00	6'-0"	8'-0"	
8'-0"x8'-0"	1.26	2.01 - 2.50	7'-0"	9'-0"	
ADVANCESPAN (SEE S3A)	0.53	0.25 - 2.00	6'-6"	8'-0"	

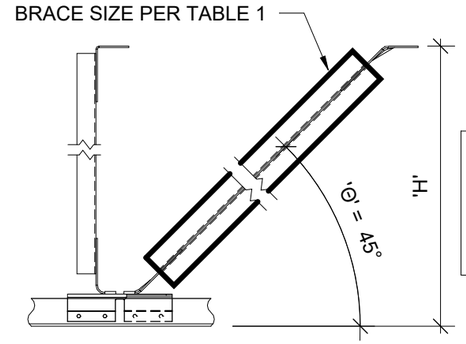

PLENUM HEIGHT 'H' IS THE VERTICAL DISTANCE BETWEEN THE CEILING ELEVATION AND BOTTOM OF DECK ELEVATION AS SHOWN.

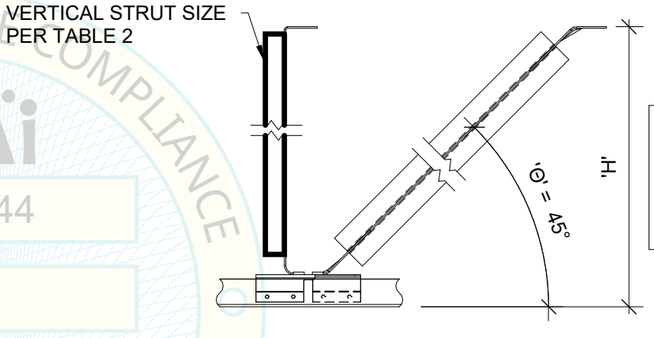

PLENUM HEIGHT 'H' IS THE VERTICAL DISTANCE BETWEEN THE CEILING ELEVATION AND BOTTOM OF DECK ELEVATION AS SHOWN.

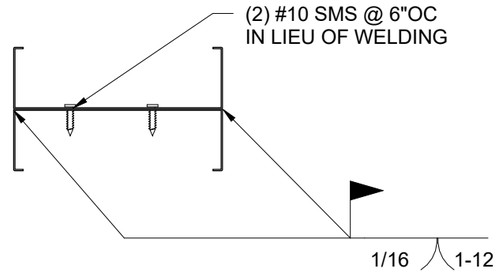

1 BACK-TO-BACK BRACE SECTION
3" = 1'-0"

TABLE 1 AND 2 NOTES:

1. SEE S5, S5A, AND FIGURES IN THIS SHEET FOR DEFINITION OF 'H' AND BRACE ANGLE 'Θ'.
2. SEE DETAIL 1/S4A FOR BRACE CONNECTION WHERE BACK-TO-BACK BRACES ARE REQUIRED.
3. 'GRIDLOK SPACING' CHOSEN PER TABLE 1 ON SHEET S3, S3A, OR S3B.
4. VERTICAL STRUT ALLOWED TO BE ROTATED A MAXIMUM OF 10 DEGREES PER GRIDLOK ELEVATION 2/S5 OR 2/S5A.
5. VERTICAL PORTION OF FLY PLATE PIECE ALLOWED TO BE BENT IN FIELD ONCE PER GRIDLOK ELEVATION 1/S5 OR 2/S5A, TO POSITION THE VERTICAL STRUT, A MAXIMUM OF 10 DEGREEES, NO REBENDING.

REVIEWED FOR CODE COMPLIANCE
HCAi
OPM-0544
BY: Roy Lobo
DATE: 11/01/2026
CALIFORNIA BUILDING CODE, 2025



DEGENKOLB ENGINEERS
225 Broadway, Suite 1325
San Diego, CA 92101
619.515.0299 PHONE
www.degenkolb.com

GRIDLOK® SUSPENDED CEILING BRACE SYSTEM
OPM-0544

SHEET TITLE:
SCHEDULES FOR 'Θ' = 45°

Drawn:	JEB	Job number:	B8769007.01
Design:	PGM	Rev:	
Check:	CC	Scale:	NTS
Date	9/10/2026		

Sheet Number S4A
OF Sheets

45° ONLY

OPM-0544: Reviewed for Code Compliance by Roy Lobo

TABLE 1: MAXIMUM PLENUM HEIGHT 'H' FOR DIFFERENT BRACE SIZES, BRACE ANGLE 'Θ', AND S_{DS} VALUES

GRIDLOK SPACING	C_{PM}	BRACE SIZE / S_{DS} / 'Θ' IN DEG	250S125-33[7]			250S162-33[7]			362S162-33[7]			(2) 250S162-33 BACK-TO-BACK[7]		600S350-54	(2) 362S250-43 BACK-TO-BACK[7]
			30°-40°	41°-50°	51°-60°	30°-40°	41°-50°	51°-60°	30°-40°	41°-50°	51°-60°	30°-40°	41°-60°	30°-60°	30°-60°
12'-0"x12'-0"	0.51	0.25 - 1.00	N/A	4'-6"		4'-6"	5'-6"		5'-0"	6'-6"		7'-6"	9'-6"	9'-6"	9'-6"
12'-0"x12'-0"	0.69	1.01 - 1.38	N/A	N/A		N/A	4'-6"			6'-0"					
8'-0"x12'-0"	1.00	1.39 - 2.00	N/A	N/A		N/A	4'-6"			6'-6"					
8'-0"x8'-0"	1.26	2.01 - 2.50	N/A	N/A		N/A	5'-0"			6'-6"					
ADVANCESPAN (SEE S3A)	0.53	0.25 - 2.00	N/A	N/A		N/A	4'-6"			6'-0"					

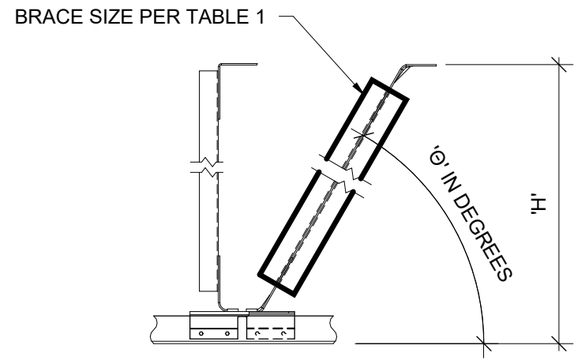

PLENUM HEIGHT 'H' IS THE VERTICAL DISTANCE BETWEEN THE CEILING ELEVATION AND BOTTOM OF DECK ELEVATION AS SHOWN.

TABLE 2: MAXIMUM PLENUM HEIGHT 'H' FOR DIFFERENT VERTICAL STRUT SIZES, BRACE ANGLE 'Θ', AND S_{DS} VALUES

GRIDLOK SPACING	C_{PM}	VERTICAL STRUT SIZE / S_{DS} / 'Θ' IN DEG	250S125-33			250S162-33			362S162-33		362S200-33
			30°-40°	41°-50°	51°-60°	30°-40°	41°-50°	51°-60°	30°-50°	51°-60°	30°-60°
12'-0"x12'-0"	0.51	0.25 - 1.00	7'-0"	7'-0"	5'-6"	9'-6"	8'-6"	7'-0"	9'-6"	9'-6"	9'-6"
12'-0"x12'-0"	0.69	1.01 - 1.38		5'-6"	N/A	8'-6"	7'-6"	6'-0"		8'-0"	
8'-0"x12'-0"	1.00	1.39 - 2.00		5'-6"	N/A	9'-0"	7'-6"	6'-0"	9'-6"	8'-0"	9'-6"
8'-0"x8'-0"	1.26	2.01 - 2.50		6'-6"	5'-0"	9'-6"	8'-0"	6'-6"		9'-0"	
ADVANCESPAN (SEE S3A)	0.53	0.25 - 2.00		5'-6"	N/A	8'-6"	7'-6"	6'-0"		8'-0"	

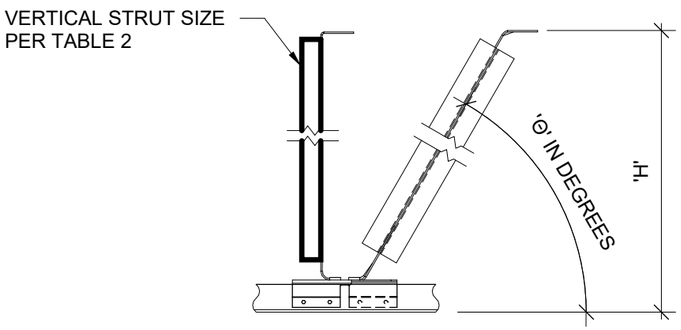

TABLE 1 AND 2 NOTES:
1. SEE S5, S5A, AND FIGURES IN THIS SHEET FOR DEFINITION OF 'H' AND BRACE ANGLE 'Θ'.
2. SEE DETAIL 1/S4A FOR BRACE CONNECTION WHERE BACK-TO-BACK BRACES ARE REQUIRED.
3. 'GRIDLOK SPACING' CHOSEN PER TABLE 1 ON SHEET S3, S3A, OR S3B.
4. 45-DEGREE FLY PLATE PIECE TO BE BENT IN FIELD ONCE, A MAXIMUM OF 15 DEGREES IN ANY DIRECTION, TO CORRECT ANGLE, NO REBENDING. WHERE BENDING IS REQUIRED.
5. VERTICAL STRUT ALLOWED TO BE ROTATED A MAXIMUM OF 10 DEGREES PER GRIDLOK ELEVATION 2/S5 OR 2/S5A.
6. VERTICAL PORTION OF FLY PLATE PIECE ALLOWED TO BE BENT IN FIELD ONCE PER GRIDLOK ELEVATION 1/S5 OR 1/S5A, TO POSITION THE VERTICAL STRUT, A MAXIMUM OF 10 DEGREEES, NO REBENDING.
7. WHEN BRACE ANGLE 'Θ' IS GREATER THAN 55 DEGREES, INCREASE BRACE SIZE TO MIN 43 MIL THICKNESS.

REVIEWED FOR CODE COMPLIANCE
HCAi
OPM-0544
BY: Roy Lobo
DATE: 11/01/2026
CALIFORNIA BUILDING CODE 2025



DEGENKOLB ENGINEERS
225 Broadway, Suite 1325
San Diego, CA 92101
619.515.0299 PHONE
www.degenkolb.com

GRIDLOK® SUSPENDED CEILING BRACE SYSTEM
OPM-0544

SHEET TITLE:
SCHEDULES FOR 'Θ' DIFFERENT THAN 45°

30° - 60°

Drawn:	JEB	Job number:	B8769007.01
Design:	PGM	Rev:	
Check:	CC	Scale:	NTS
Date	9/10/2026		

Sheet Number S4B

OF Sheets

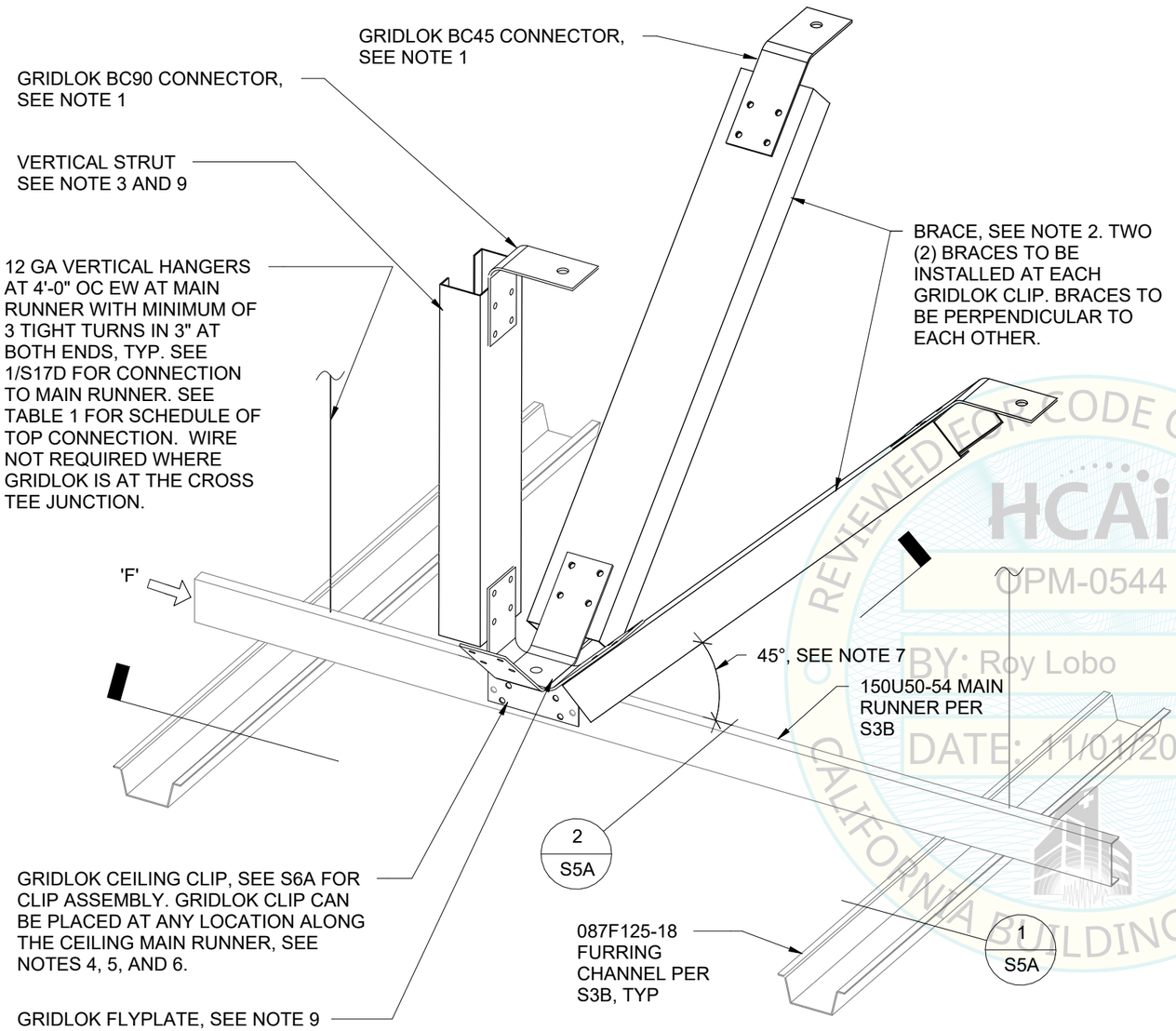

1 GRIDLOK GYPBOARD FRAMED CEILINGS ASSEMBLY (ISOMETRIC)

N.T.S.

TABLE 1: GRIDLOK CONNECTION SCHEDULE		
STRUCTURAL CONDITION OF FLOOR/ROOF ABOVE SUSPENDED CEILING	**HANGER WIRE DETAIL**	**BC45 BRACE AND BC90 STRUT TOP CONNECTION DETAIL**
CONCRETE SLAB, BEAM, OR JOIST	2/S18	1/S11
CONCRETE OVER W DECK	1/S18	1/S12, 2/S12, 1/S12A, 2/S12A
CONCRETE OVER B DECK	1/S18	1/S13, 2/S/13, 1/S13A, 2/S/13A
STRUCTURAL STEEL	1/S20	1/S14
SAWN TIMBER	2/S20	1/S15

NOTES:

1. SEE TABLE 1 FOR SCHEDULE OF CONNECTION DETAIL OF GRIDLOK BC45 AND BC90 CONNECTORS TO THE FLOOR ABOVE FOR DIFFERENT STRUCTURAL SYSTEMS.
2. SEE TABLE 1 ON S4A FOR SCHEDULE OF PLENUM HEIGHT 'H' BASED ON BRACE ANGLE, ' Θ' = 45 DEGREES, BRACE SIZE AND CHOSEN GRIDLOK SPACING. IF ALTERNATIVE BRACE ANGLE ' Θ' USED PER NOTE 7, SEE TABLE 1 ON S4B.
3. SEE TABLE 2 ON S4A FOR SCHEDULE OF PLENUM HEIGHT 'H' BASED ON BRACE ANGLE, ' Θ' = 45 DEGREES, VERTICAL STRUT SIZE AND CHOSEN GRIDLOK SPACING. IF ALTERNATIVE BRACE ANGLE ' Θ' USED PER NOTE 7, SEE TABLE 2 ON S4B.
4. THE GRIDLOK ASSEMBLY CAN BE PLACED ANYWHERE ALONG THE MAIN RUNNER. SEE 1/S5A FOR CEILING CLIP CONNECTION TO MAIN RUNNER.
5. THE GRIDLOK FLY-PLATE CAN BE ROTATED AT ANY ANGLE, FROM 0 TO 360 DEGREES, WHEN THE CENTERLINE OF THE GRIDLOK IS WITHIN 3" FROM THE INTERSECTION OF THE MAIN AND CROSS RUNNERS.
6. THE GRIDLOK FLY-PLATE PIECE CAN BE ROTATED IN 90-DEGREE INTERVALS PROVIDED THE BRACES ARE ALIGNED WITH THE MAIN AND CROSS RUNNERS.
7. FLY-PLATE 45-DEGREE FLANGES ALLOWED TO BE BENT IN FIELD ONCE, A MAXIMUM OF 15 DEGREES IN ANY DIRECTION, TO CORRECT ANGLE, NO REBENDING.
8. VERTICAL STRUT ALLOWED TO BE ROTATED A MAXIMUM OF 10 DEGREES PER GRIDLOK ELEVATION 2/S5A.
9. FLY PLATE VERTICAL FLANGE ALLOWED TO BE BENT IN FIELD ONCE PER GRIDLOK ELEVATION 1/S5A, TO POSITION THE VERTICAL STRUT, A MAXIMUM OF 10 DEGREEES, NO REBENDING.

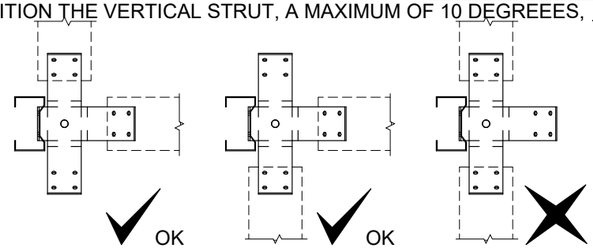

3 2-DIRECTION BRACE LAYOUT ARRANGEMENTS (PLAN VIEW)

N.T.S.

REVIEWED FOR CODE COMPLIANCE
HCAi
OPM-0544
BY: Roy Lobo
DATE: 11/01/2026
CALIFORNIA BUILDING CODE

REGISTERED PROFESSIONAL ENGINEER
CHAD RAYMOND CLOSS
No. S 5946
Exp. Date
11/01/2026
STRUCTURAL
STATE OF CALIFORNIA

DEGENKOLB ENGINEERS
225 Broadway, Suite 1325
San Diego, CA 92101
619.515.0299 PHONE
www.degenkolb.com

GRIDLOK® SUSPENDED CEILING BRACE SYSTEM
OPM-0544

SHEET TITLE:
3D SECTION AND CONNECTION SCHEDULE FOR GYPBOARD CEILINGS WITH C AND FURRING CHANNEL FRAMING (GRIDLOK 10D)

Drawn:	JEB	Job number:	B8769007.01
Design:	PGM	Rev:	
Check:	CC	Scale:	NTS
Date	9/10/2026		

Sheet Number S4C

OF Sheets

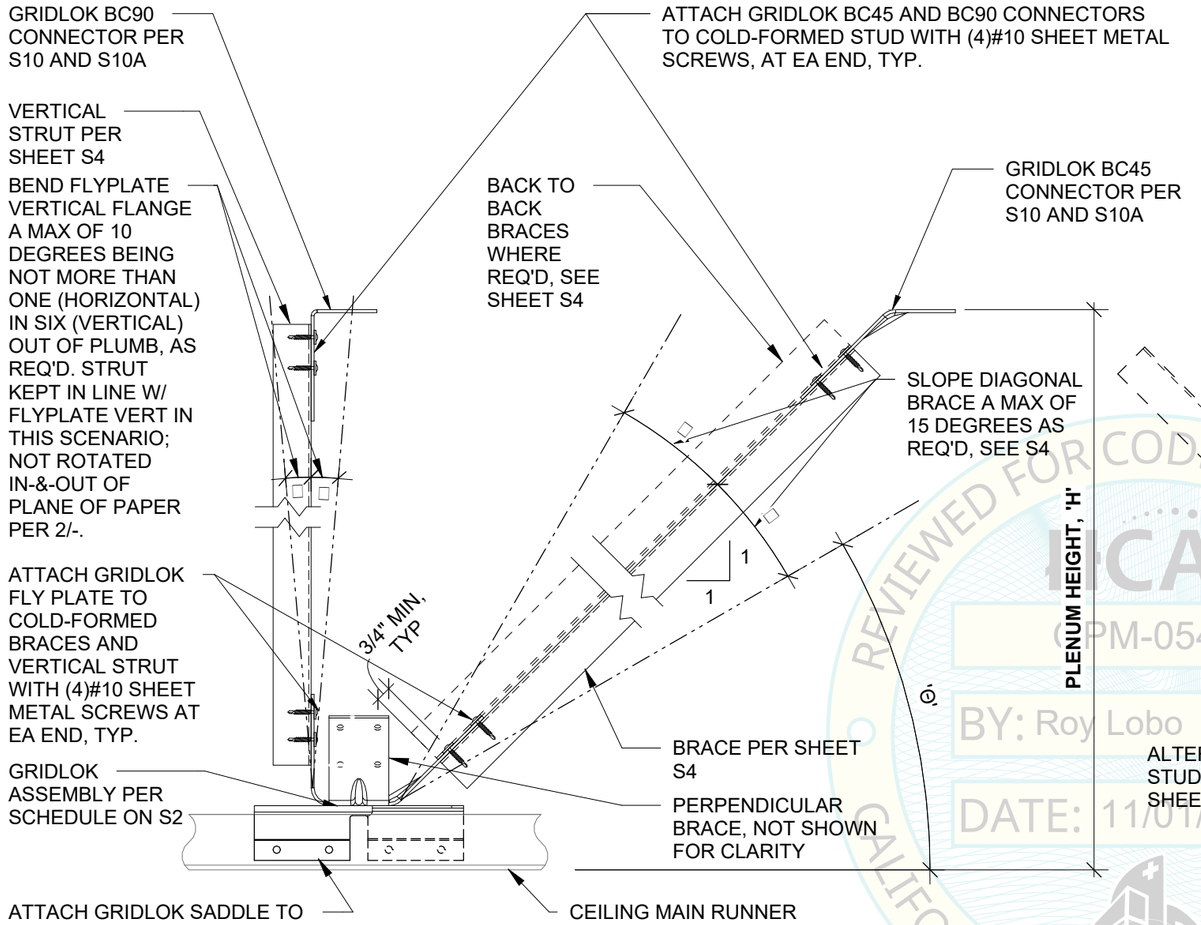

SIDE

NOTES:
1. SEE TABLE 1 ON SHEET S4 FOR SCHEDULE OF CONNECTION DETAIL OF GRIDLOK BC45 AND BC90 CONNECTORS TO THE FLOOR ABOVE FOR DIFFERENT DECK TYPES.

1 GRIDLOK ELEVATION

NTS

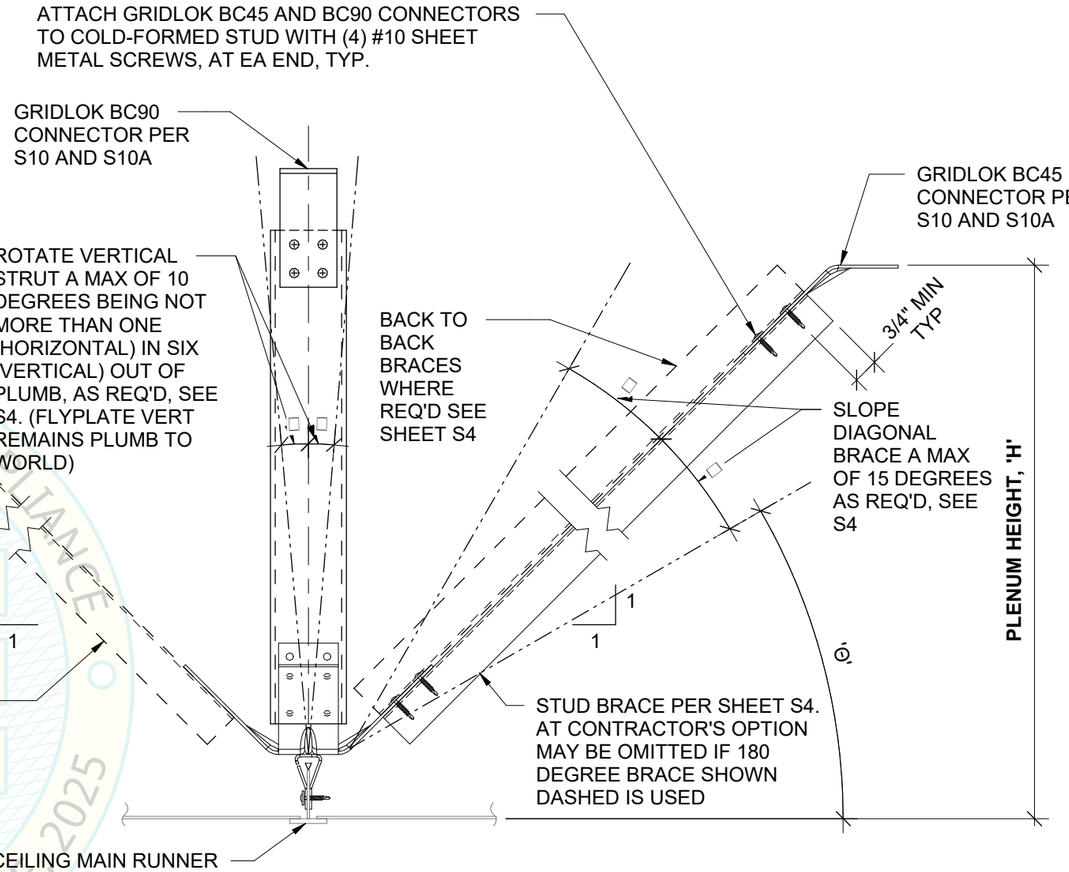

FRONT

NOTES:
1. SEE TABLE 1 ON SHEET S4 FOR SCHEDULE OF CONNECTION DETAIL OF GRIDLOK BC45 AND BC90 CONNECTORS TO THE FLOOR ABOVE FOR DIFFERENT DECK TYPES.
2. SEE DETAIL 1/S5 FOR INFO NOT SHOWN OR NOTED.

2 GRIDLOK ELEVATION

NTS

ICAi
OPM-0544
BY: Roy Lobo
DATE: 11/01/2026
REVIEWED FOR CODE COMPLIANCE
CALIFORNIA BUILDING CODE 2025

REGISTERED PROFESSIONAL ENGINEER
CHAD RAYMOND CLOSS
No. S 5946
Exp. Date
9/30/2026
STRUCTURAL
STATE OF CALIFORNIA

DEGENKOLB ENGINEERS
225 Broadway, Suite 1325
San Diego, CA 92101
619.515.0299 PHONE
www.degenkolb.com

GRIDLOK® SUSPENDED CEILING BRACE SYSTEM
OPM-0544

SHEET TITLE:
GRIDLOK ELEVATIONS FOR ACOUSTICAL TILE & LAY-IN PANEL CEILINGS AND GYPBOARD CEILINGS

Drawn:	JEB	Job number:	B8769007.01
Design:	PGM	Rev:	
Check:	CC	Scale:	NTS
Date	9/10/2026		

Sheet Number S5

OF Sheets

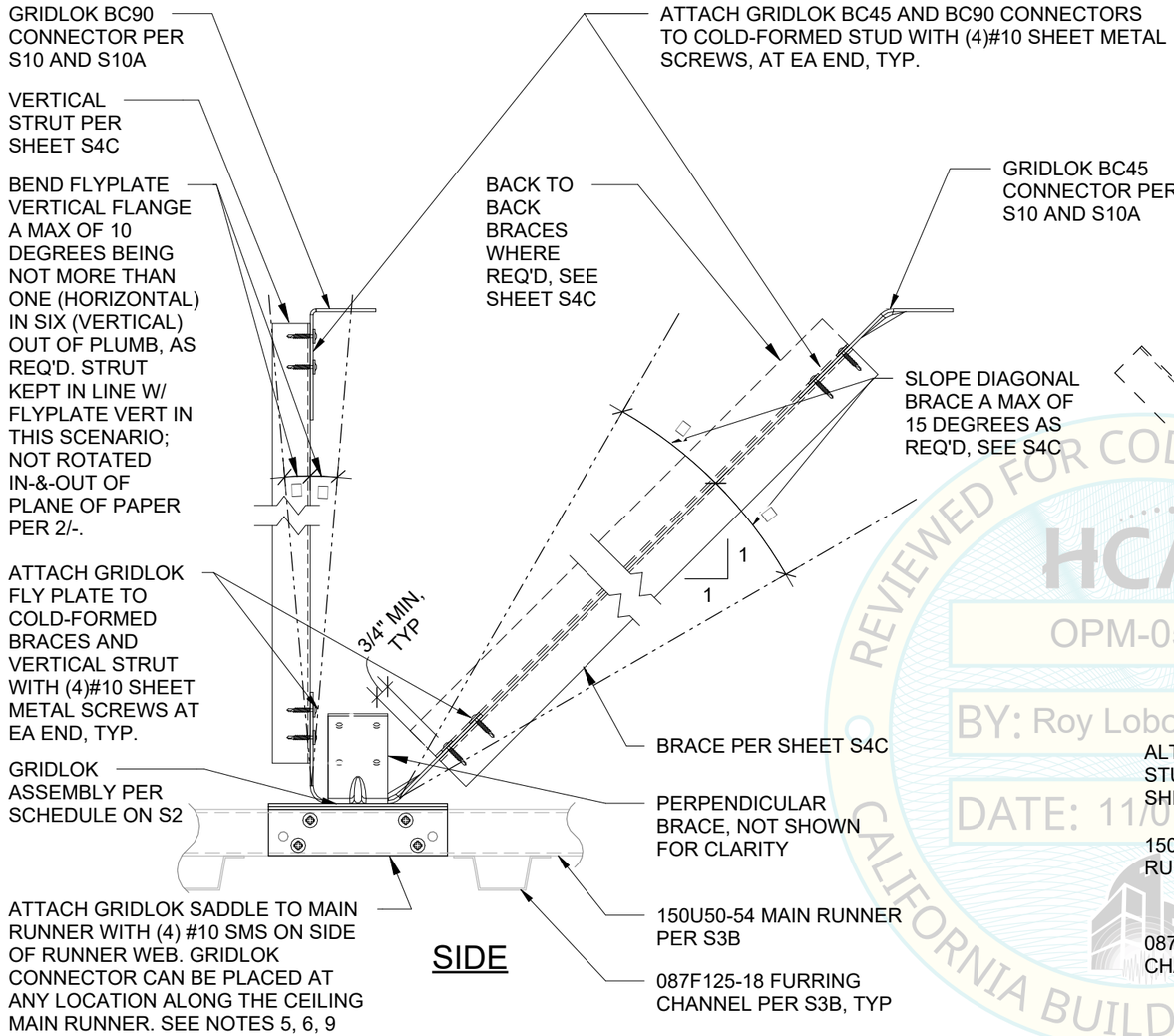

NOTES:
1. SEE TABLE 1 ON SHEET S4C FOR SCHEDULE OF CONNECTION DETAIL OF GRIDLOK BC45 AND BC90 CONNECTORS TO THE FLOOR ABOVE FOR DIFFERENT DECK TYPES.

1 GRIDLOK ELEVATION

N.T.S.

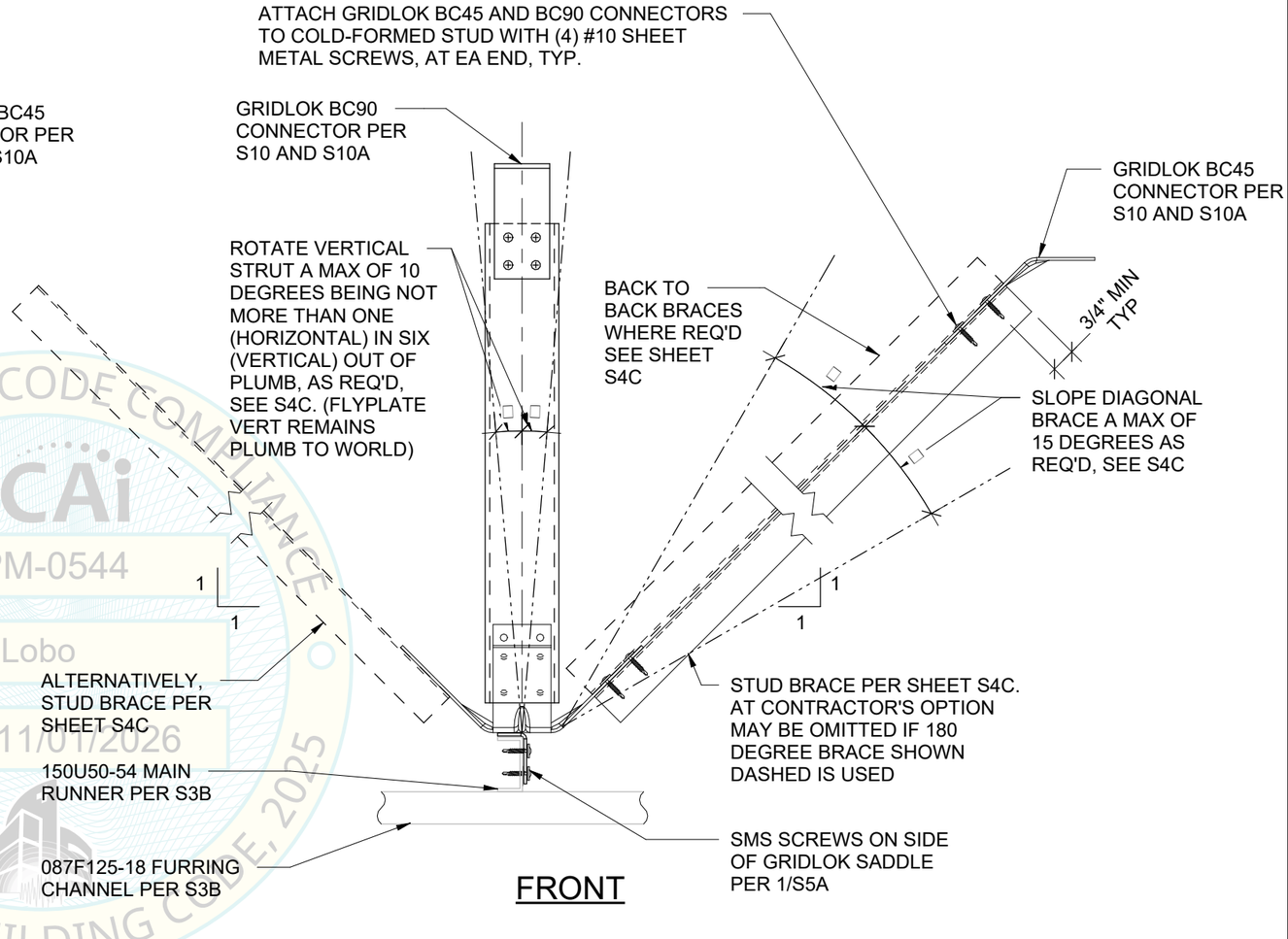

NOTES:
1. SEE TABLE 1 ON SHEET S4C FOR SCHEDULE OF CONNECTION DETAIL OF GRIDLOK BC45 AND BC90 CONNECTORS TO THE FLOOR ABOVE FOR DIFFERENT DECK TYPES.
2. SEE DETAIL 1/S5A FOR INFO NOT SHOWN OR NOTED.

2 GRIDLOK ELEVATION

N.T.S.

REVIEWED FOR CODE COMPLIANCE
HCAi
OPM-0544
BY: Roy Lobo
DATE: 11/01/2026
CALIFORNIA BUILDING CODE, 2025

REGISTERED PROFESSIONAL ENGINEER
CHAD RAYMOND CLOSS
No. S 5946
Exp. Date
9/30/2026
STRUCTURAL
STATE OF CALIFORNIA

DEGENKOLB ENGINEERS
225 Broadway, Suite 1325
San Diego, CA 92101
619.515.0299 PHONE
www.degenkolb.com

GRIDLOK® SUSPENDED CEILING BRACE SYSTEM
OPM-0544

SHEET TITLE:
GRIDLOK ELEVATIONS FOR GYPBOARD CEILINGS WITH C AND FURRING CHANNEL FRAMING (GRIDLOK 10D)

Drawn:	JEB	Job number:	B8769007.01
Design:	PGM	Rev:	
Check:	CC	Scale:	NTS
Date	9/10/2026		

Sheet Number S5A
OF Sheets

ITEM NO.	PART NO.	GRIDLOK-10 P / QTY	DETAIL
1	GRIDLOK-FLY-PLATE	1	2/S9
2	GRIDLOK-BC90-CONNECTOR	1	1/S10 & 1/S10A
3	GRIDLOK-BC45-CONNECTOR	2	2/S10 & 2/S10A
4	GRIDLOK-10 P-SADDLE	1	1/S9
5	ISO 7041-M8-S	1	-
6	PEM FH-M8-18 X-S	1	-

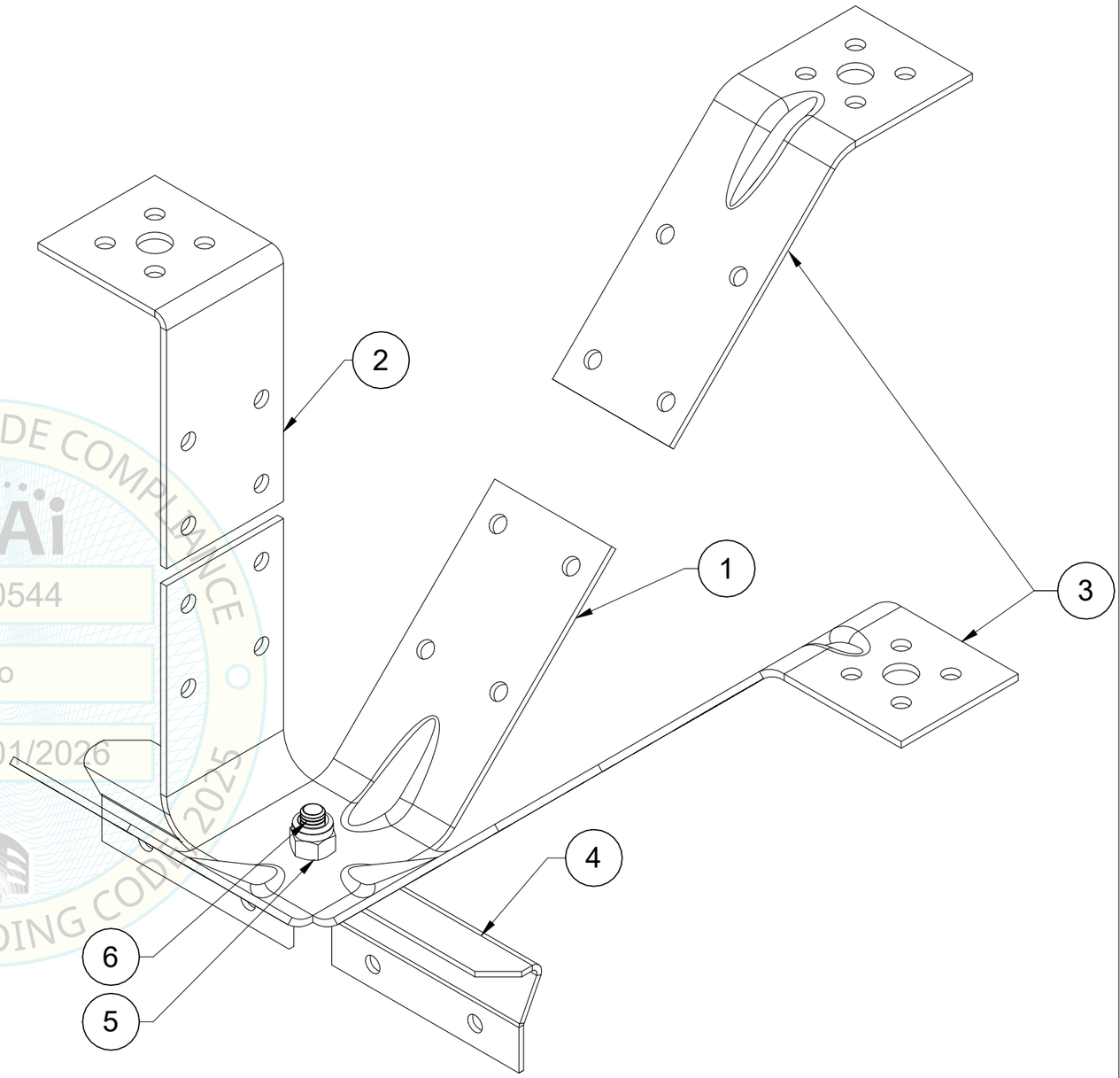

REVIEWED FOR CODE COMPLIANCE
HCAi
OPM-0544
BY: Roy Lobo
DATE: 11/01/2026
CALIFORNIA BUILDING CODE 2025

NOTES:
1. SEE SCHEDULE ON S2 FOR ACCEPTABLE CEILING GRID ASSEMBLY TO BE USED WITH GRIDLOK-10P ASSEMBLY.

1 GRIDLOK-10 P ASSEMBLY
3/32" = 1'-0"

REGISTERED PROFESSIONAL ENGINEER
CHAD RAYMOND CLOSS
No. S 5946
Exp. Date
10/31/2026
STATE OF CALIFORNIA

DEGENKOLB ENGINEERS
225 Broadway, Suite 1325
San Diego, CA 92101
619.515.0299 PHONE
www.degenkolb.com

GRIDLOK® SUSPENDED CEILING BRACE SYSTEM
OPM-0544

SHEET TITLE:
GRIDLOK-10P ASSEMBLY DETAILS

Drawn:	JEB	Job number:	B8769007.01
Design:	PGM	Rev:	
Check:	CC	Scale:	AS INDICATED
Date	9/10/2026		

Sheet Number S6
OF Sheets

ITEM NO.	PART NO.	GRIDLOK-10 P / QTY	DETAIL
1	GRIDLOK-FLY-PLATE	1	2/S9
2	GRIDLOK-BC90-CONNECTOR	1	1/S10 & 1/S10A
3	GRIDLOK-BC45-CONNECTOR	2	2/S10 & 2/S10A
4	GRIDLOK-D-CHANNEL	1	1/S9A
5	ISO 7041-M8-S	1	-
6	PEM FH-M8-18 X-S	1	-

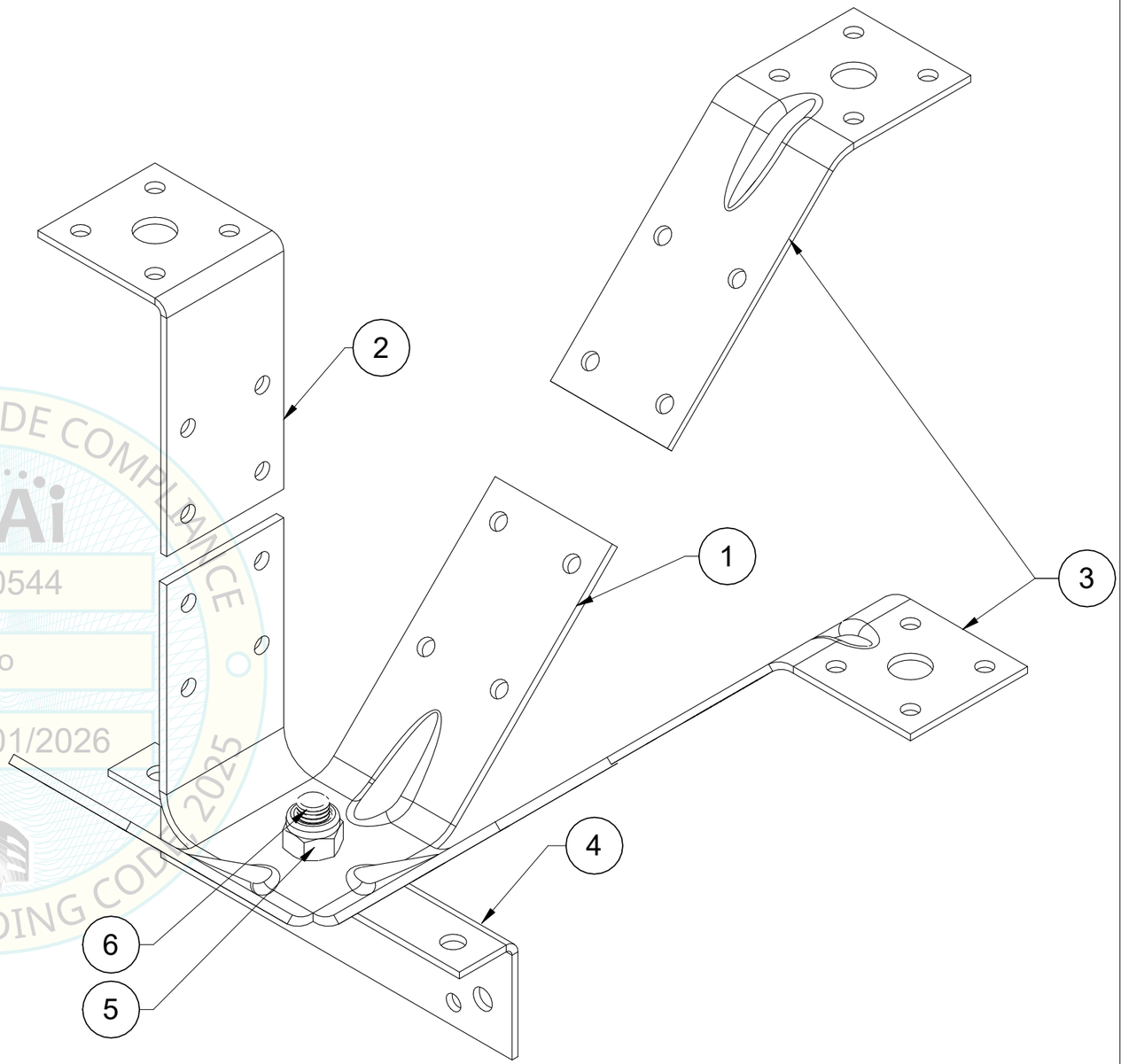

REVIEWED FOR CODE COMPLIANCE
HCAi
OPM-0544
BY: Roy Lobo
DATE: 11/01/2026
CALIFORNIA BUILDING CODE 2025

NOTES:
1. SEE SCHEDULE ON S2 FOR ACCEPTABLE CEILING GRID ASSEMBLY TO BE USED WITH GRIDLOK-GRD-10D ASSEMBLY.

1 GRIDLOK-GRD-10D ASSEMBLY

3/32" = 1'-0"

REGISTERED PROFESSIONAL ENGINEER
CHAD RAYMOND CLOSS
No. S 5946
Exp. Date
11/04/2026
STATE OF CALIFORNIA

DEGENKOLB ENGINEERS
225 Broadway, Suite 1325
San Diego, CA 92101
619.515.0299 PHONE
www.degenkolb.com

GRIDLOK® SUSPENDED CEILING BRACE SYSTEM
OPM-0544

SHEET TITLE:
GRIDLOK-GRD-10D ASSEMBLY DETAILS (GRIDLOK 10D)

Drawn:	JEB	Job number:	B8769007.01
Design:	PGM	Rev:	
Check:	CC	Scale:	AS INDICATED
Date	9/10/2026		

Sheet Number S6A
OF Sheets

ITEM NO.	PART NO.	GRIDLOK-10 / QTY	DETAIL
1	GRIDLOK-FLY-PLATE	1	2/S9
2	GRIDLOK-BC90-CONNECTOR	1	1/S10 & 1/S10A
3	GRIDLOK-BC45-CONNECTOR	2	2/S10 & 2/S10A
4	GRIDLOK-10-SADDLE	1	3/S9
5	ISO 7041-M8-S	1	-
6	PEM FH-M8-18 X-S	1	-

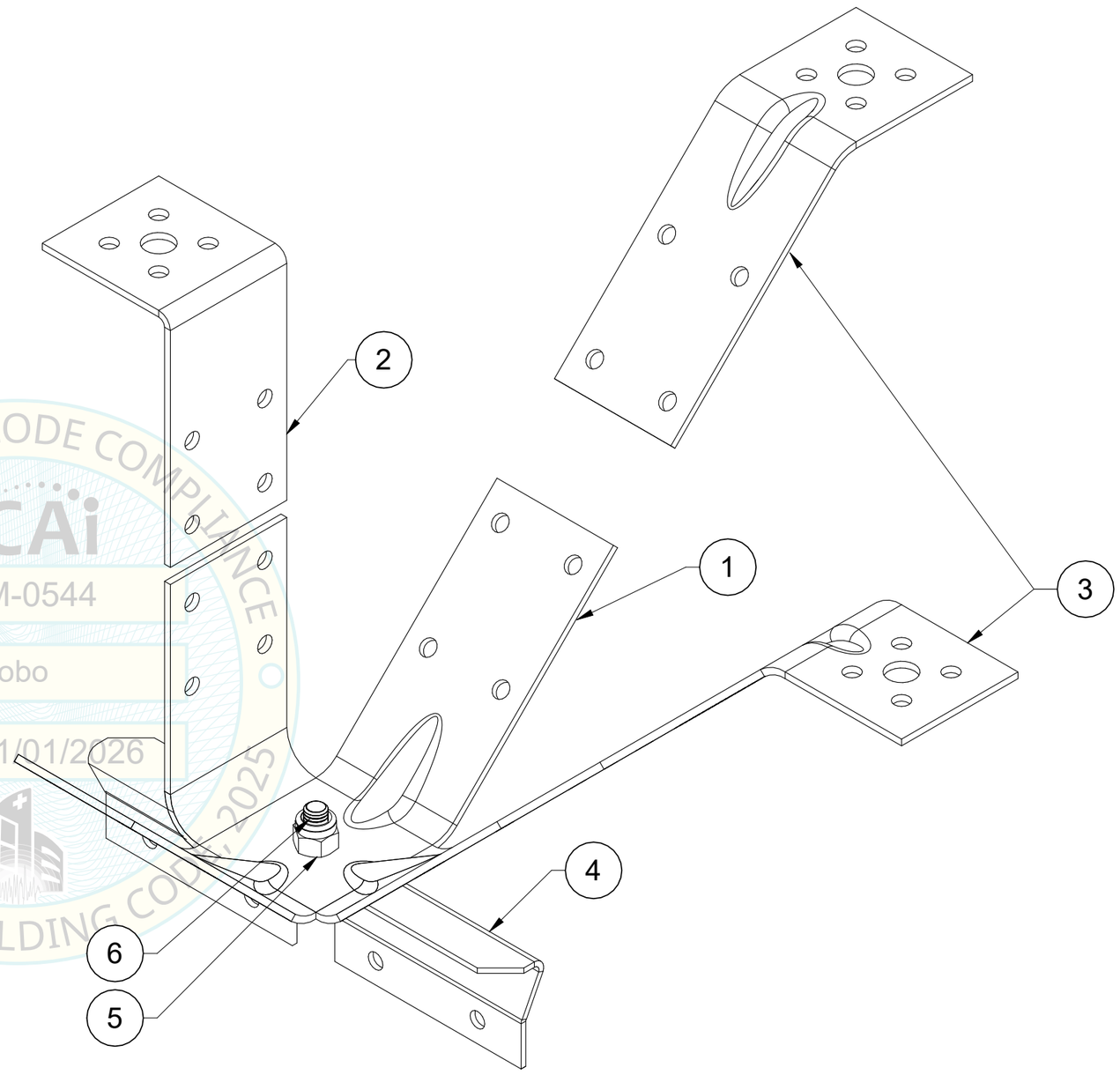

REVIEWED FOR CODE COMPLIANCE
HCAi
OPM-0544
BY: Roy Lobo
DATE: 11/01/2026
CALIFORNIA BUILDING CODE 2025

NOTES:
1. SEE SCHEDULE ON S2 FOR ACCEPTABLE CEILING GRID ASSEMBLY TO BE USED WITH GRIDLOK-10 ASSEMBLY.

1 GRIDLOK-10 ASSEMBLY
3/32" = 1'-0"

REGISTERED PROFESSIONAL ENGINEER
CHAD RAYMOND CLOSS
No. S 5946
Exp. Date
9/10/2026
STATE OF CALIFORNIA

DEGENKOLB ENGINEERS
225 Broadway, Suite 1325
San Diego, CA 92101
619.515.0299 PHONE
www.degenkolb.com

GRIDLOK® SUSPENDED CEILING BRACE SYSTEM
OPM-0544

SHEET TITLE:
GRIDLOK-10 ASSEMBLY DETAILS

Drawn:	JEB	Job number:	B8769007.01
Design:	PGM	Rev:	
Check:	CC	Scale:	AS INDICATED
Date	9/10/2026		

Sheet Number S7
OF Sheets

ITEM NO.	PART NO.	GRIDLOK-10 CT / QTY	DETAIL
1	GRIDLOK-FLY-PLATE	1	2/S9
2	GRIDLOK-BC90-CONNECTOR	1	1/S10 & 1/S10A
3	GRIDLOK-BC45-CONNECTOR	2	2/S10 & 2/S10A
4	GRIDLOK-10CT-SADDLE	1	3/S9
5	ISO 7041-M8-S	1	-
6	PEM FH-M8-18 X-S	1	-

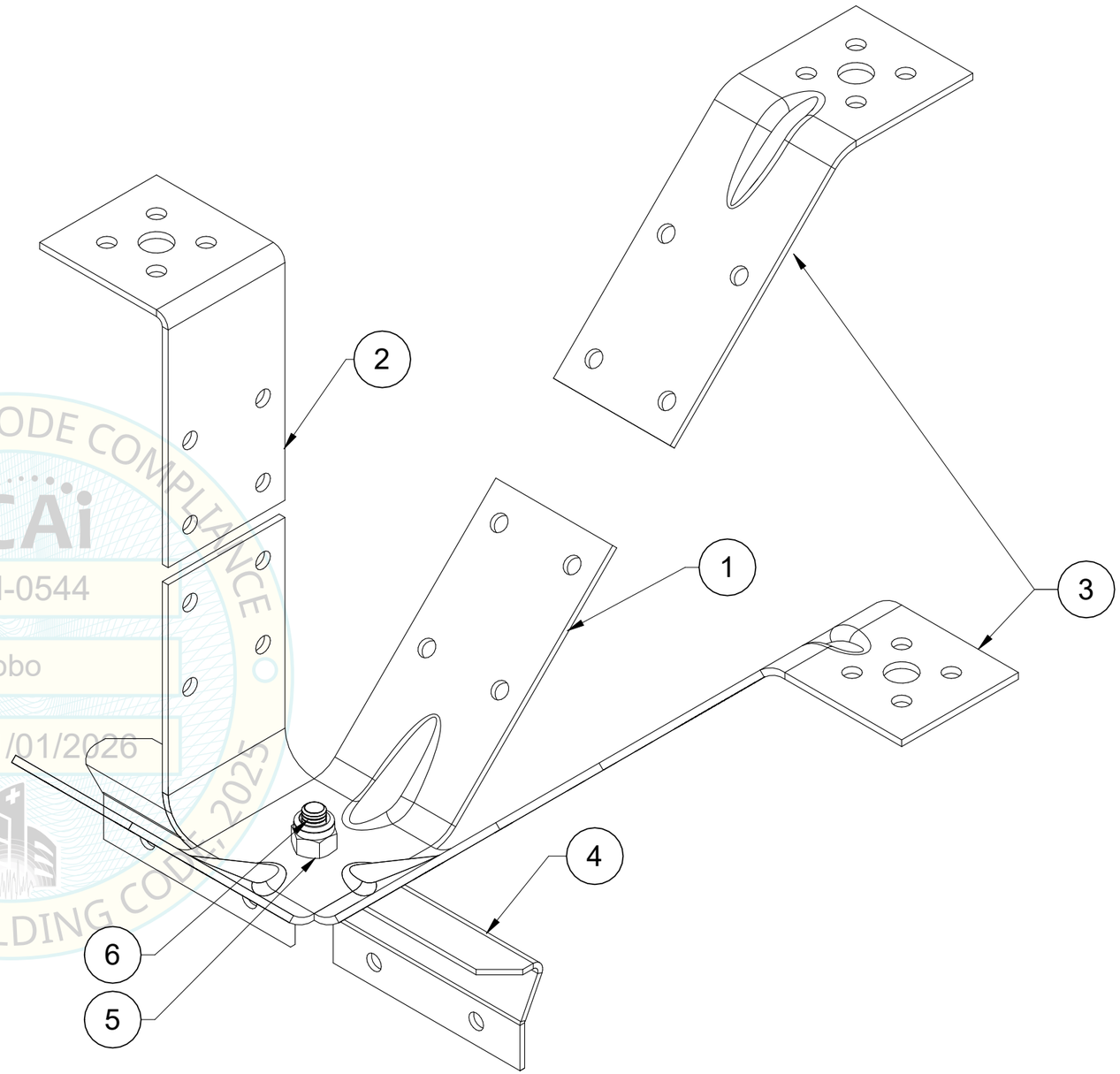

REVIEWED FOR CODE COMPLIANCE
HCAi
OPM-0544
BY: Roy Lobo
DATE: 11/01/2026
CALIFORNIA BUILDING CODE 2025

NOTES:
1. SEE SCHEDULE ON S2 FOR ACCEPTABLE CEILING GRID ASSEMBLY TO BE USED WITH GRIDLOK-10CT ASSEMBLY.

1 GRIDLOK-10CT ASSEMBLY
3/32" = 1'-0"

REGISTERED PROFESSIONAL ENGINEER
CHAD RAYMOND CLOSS
No. S 5946
Exp. Date
STRUCTURAL
STATE OF CALIFORNIA
11/04/2026

DEGENKOLB ENGINEERS
225 Broadway, Suite 1325
San Diego, CA 92101
619.515.0299 PHONE
www.degenkolb.com

GRIDLOK® SUSPENDED CEILING BRACE SYSTEM
OPM-0544

SHEET TITLE:
GRIDLOK-10CT ASSEMBLY DETAILS

Drawn:	JEB	Job number:	B8769007.01
Design:	PGM	Rev:	
Check:	CC	Scale:	AS INDICATED
Date	9/10/2026		

Sheet Number S8
OF Sheets

NOTE:
ALL DIMENSIONS IN THIS SHEET ARE IN mm. IMPERIAL UNITS IN PARENTHESIS (INCHES).

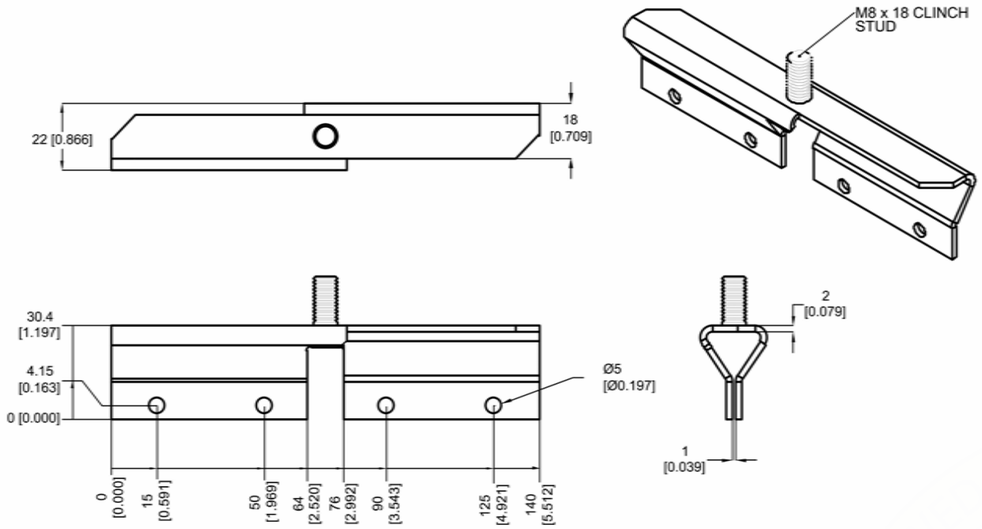

3 GRIDLOK 10 AND GRIDLOK 10-CT SADDLE CONNECTOR

N.T.S.

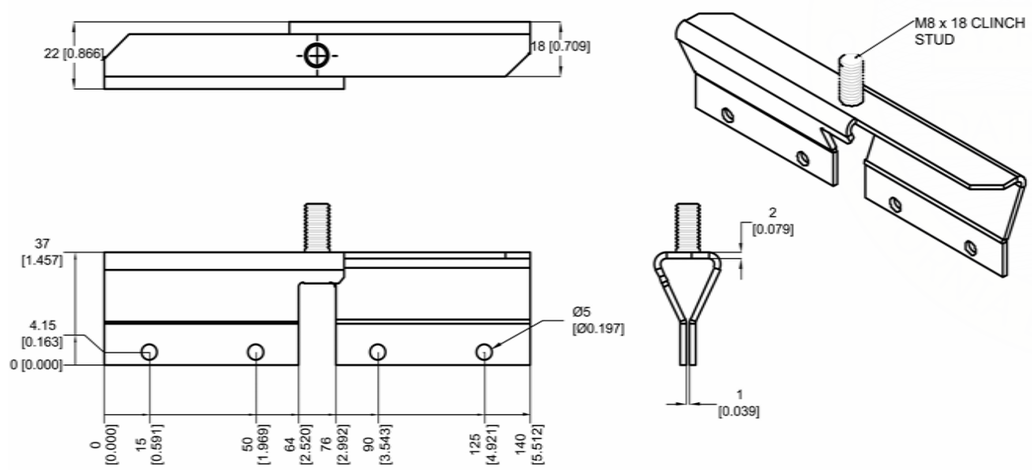

1 GRIDLOK 10-P SADDLE CONNECTOR

NTS

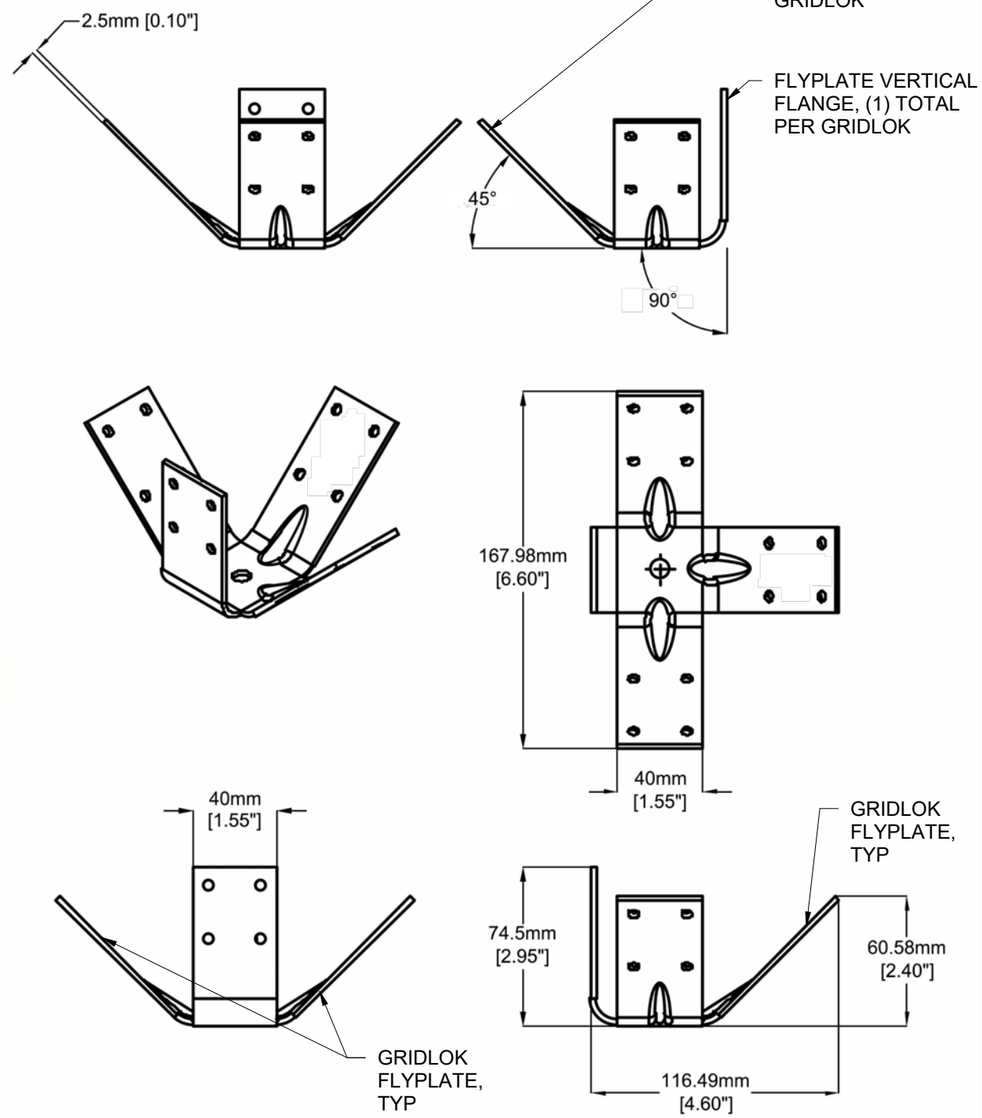

2 GRIDLOK FLY-PLATE CONNECTOR

N.T.S.

R CODE COMPLIANCE
HCAi
PM-0544
y Lobo
11/01/2026
UILDING CODE, 2025

REGISTERED PROFESSIONAL ENGINEER
CHAD RAYMOND CLOSS
No. S 5946
Exp. Date
STRUCTURAL
STATE OF CALIFORNIA
1/01/2026

Degenkolb
DEGENKOLB ENGINEERS
225 Broadway, Suite 1325
San Diego, CA 92101
619.515.0299 PHONE
www.degenkolb.com

GRIDLOK® SUSPENDED CEILING BRACE SYSTEM
OPM-0544

SHEET TITLE:
GRIDLOK PARTS

Drawn:	JEB	Job number:	B8769007.01
Design:	PGM	Rev:	
Check:	CC	Scale:	
Date	9/10/2026		

Sheet Number S9
OF Sheets

NOTE:
ALL DIMENSIONS IN THIS SHEET ARE IN mm. IMPERIAL UNITS IN PARENTHESIS (INCHES).

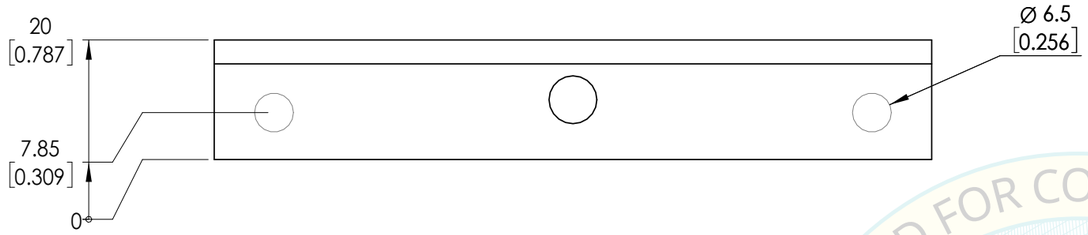

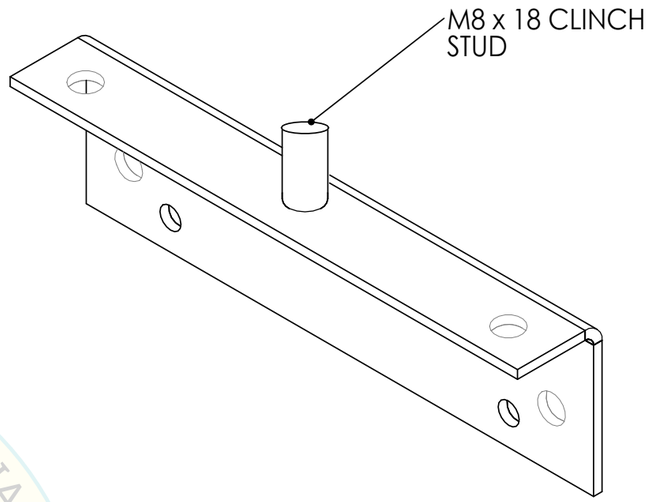

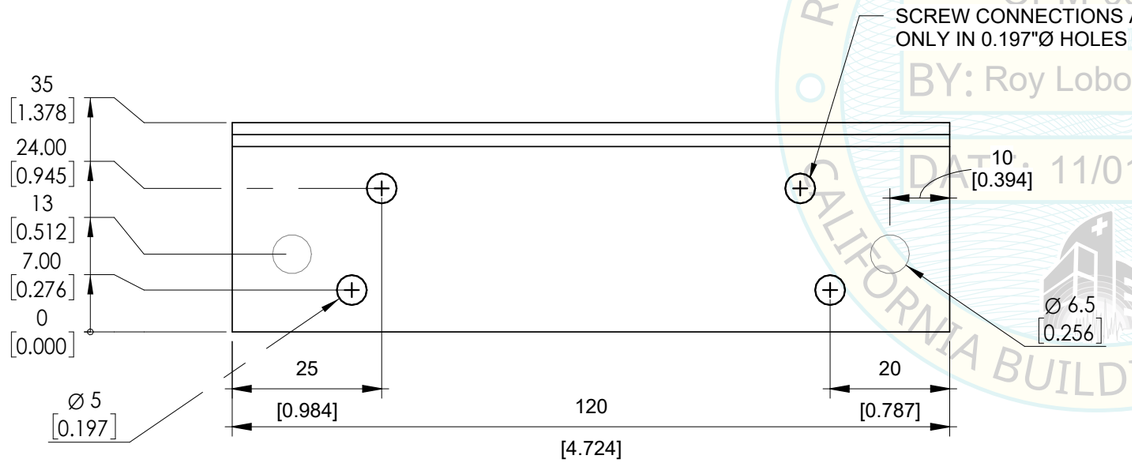

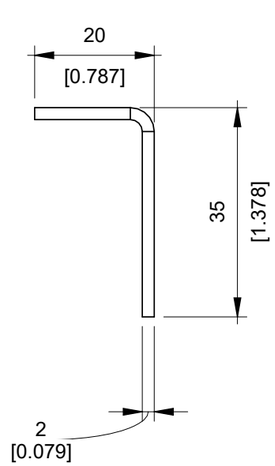

REVIEWED FOR CODE COMPLIANCE
HCAi
OPM-0544
BY: Roy Lobo
DATE: 11/01/2026
CALIFORNIA BUILDING CODE, 2025

1 GRIDLOK D SADDLE CONNECTOR

N.T.S.

REGISTERED PROFESSIONAL ENGINEER
CHAD RAYMOND CLOSS
No. S 5946
Exp. Date
11/30/2026
STATE OF CALIFORNIA

DEGENKOLB ENGINEERS
225 Broadway, Suite 1325
San Diego, CA 92101
619.515.0299 PHONE
www.degenkolb.com

GRIDLOK® SUSPENDED CEILING BRACE SYSTEM
OPM-0544

SHEET TITLE:
GRIDLOK PARTS (GRIDLOK 10D)

Drawn:	JEB	Job number:	B8769007.01
Design:	PGM	Rev:	
Check:	CC	Scale:	
Date	9/10/2026		

Sheet Number S9A
OF Sheets

NOTE:
ALL DIMENSIONS IN THIS SHEET ARE IN mm. IMPERIAL UNITS IN PARENTHESIS (INCHES).

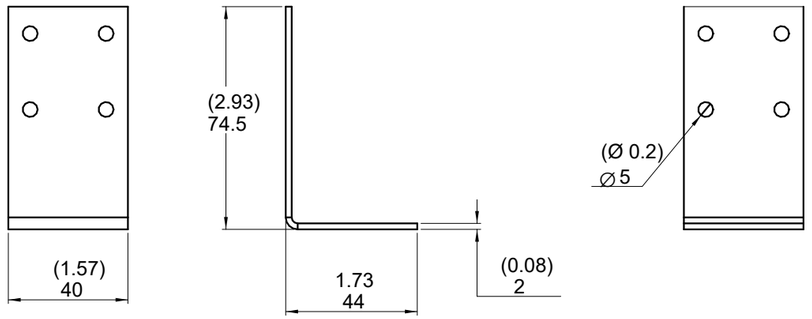

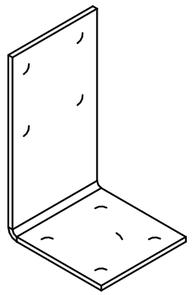

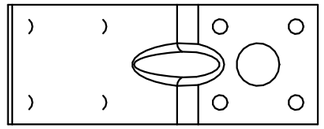

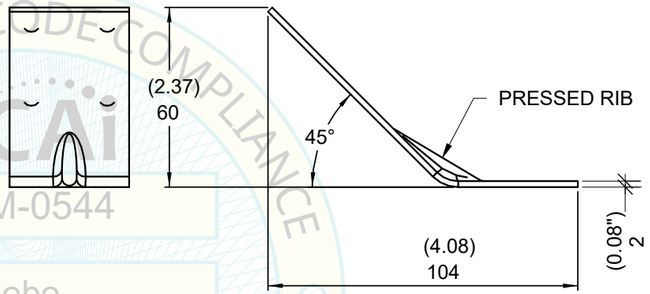

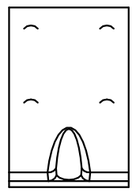

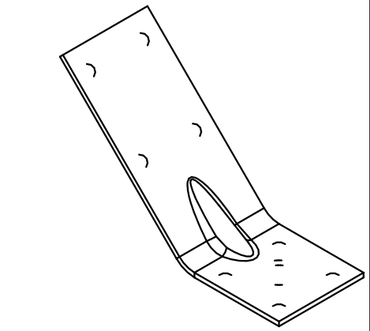

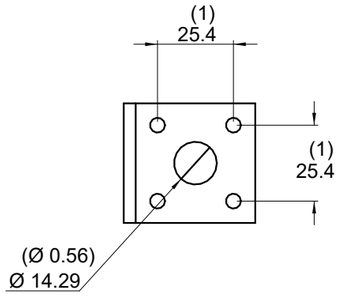

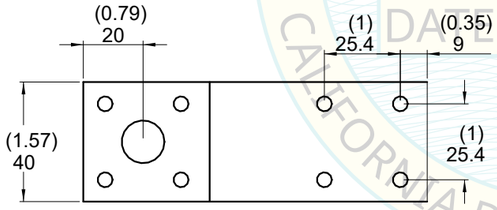

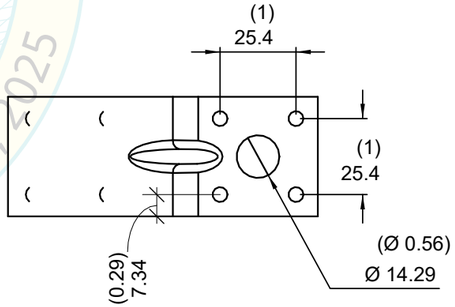

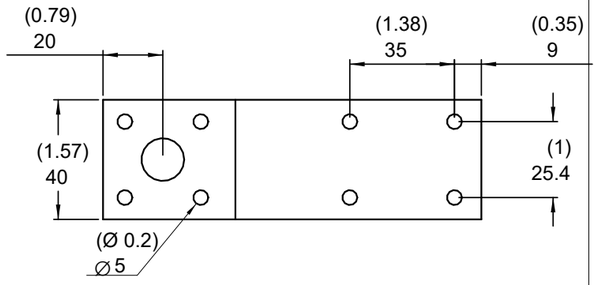

NOTE:
VERTICAL PORTION OF TOP STRUT CONNECTOR ALLOWED TO BE BENT IN FIELD ONCE (SIMILAR TO GRIDLOK ELEVATION 1/S5 OR 1/S5A), TO POSITION THE VERTICAL STRUT, A MAXIMUM OF 10 DEGREES, NO REBENDING.

1 GRIDLOK TOP STRUT CONNECTOR (BC90) FOR 1/2" Ø BOLTS
N.T.S.

NOTE:
45 DEGREE PORTION OF TOP BRACE CONNECTOR ALLOWED TO BE BENT IN FIELD ONCE, A MAXIMUM OF 15 DEGREES IN ANY DIRECTION TO CORRECT ANGLE, NO REBENDING.

2 GRIDLOK TOP BRACE CONNECTOR (BC45) FOR 1/2" Ø BOLTS
N.T.S.

REVIEWED FOR CODE COMPLIANCE
HCAi
OPM-0544
BY: Roy Lobo
DATE: 11/01/2026
CALIFORNIA BUILDING CODE, 2025

REGISTERED PROFESSIONAL ENGINEER
CHAD RAYMOND CLOSS
No. S 5946
Exp. Date
11/01/2026
STATE OF CALIFORNIA

DEGENKOLB ENGINEERS
225 Broadway, Suite 1325
San Diego, CA 92101
619.515.0299 PHONE
www.degenkolb.com

GRIDLOK® SUSPENDED CEILING BRACE SYSTEM
OPM-0544

SHEET TITLE:
GRIDLOK PARTS

Drawn:	JEB	Job number:	B8769007.01
Design:	PGM	Rev:	
Check:	CC	Scale:	
Date	9/10/2026		

Sheet Number S10
OF Sheets

NOTE:
ALL DIMENSIONS IN THIS SHEET ARE IN mm. IMPERIAL UNITS IN PARENTHESIS (INCHES).

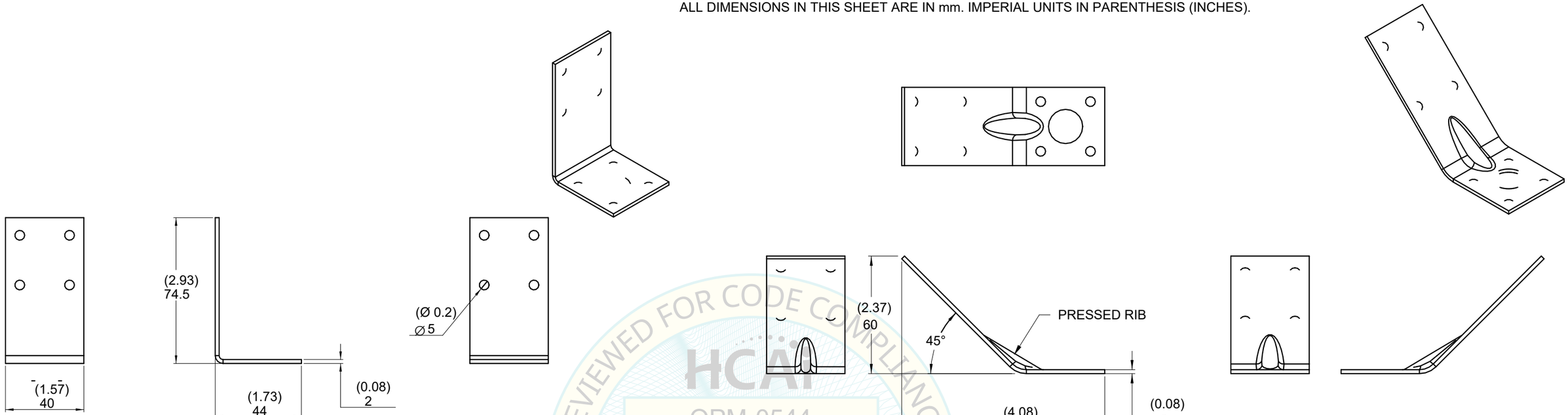

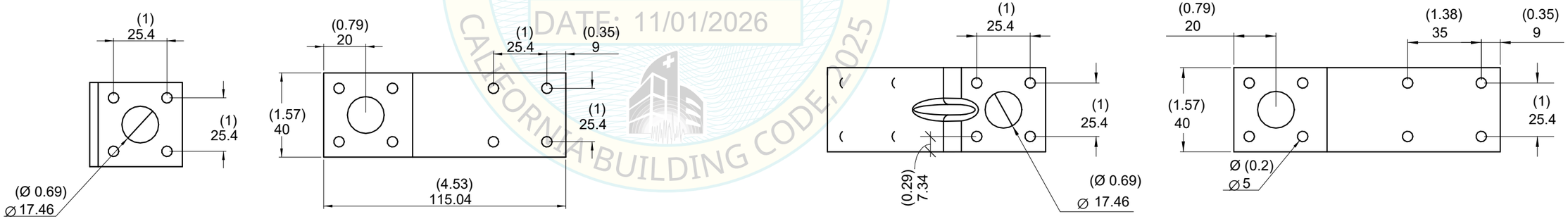

NOTE:
VERTICAL PORTION OF TOP STRUT CONNECTOR ALLOWED TO BE BENT IN FIELD ONCE (SIMILAR TO GRIDLOK ELEVATION 1/S5 OR 1/S5A), TO POSITION THE VERTICAL STRUT, A MAXIMUM OF 10 DEGREES, NO REBENDING.

1 GRIDLOK TOP STRUT CONNECTOR (BC90) FOR 5/8" Ø BOLTS
N.T.S.

NOTE:
45 DEGREE PORTION OF TOP BRACE CONNECTOR ALLOWED TO BE BENT IN FIELD ONCE, A MAXIMUM OF 15 DEGREES IN ANY DIRECTION TO CORRECT ANGLE, NO REBENDING.

2 GRIDLOK TOP BRACE CONNECTOR (BC45) FOR 5/8" Ø BOLTS
N.T.S.

REVIEWED FOR CODE COMPLIANCE
HCAI
OPM-0544
BY: Roy Lobo
DATE: 11/01/2026
CALIFORNIA BUILDING CODE 2025

REGISTERED PROFESSIONAL ENGINEER
CHAD RAYMOND CLOSS
No. S 5946
Exp. Date
3/31/2026
STRUCTURAL
STATE OF CALIFORNIA

DEGENKOLB ENGINEERS
225 Broadway, Suite 1325
San Diego, CA 92101
619.515.0299 PHONE
www.degenkolb.com

GRIDLOK® SUSPENDED CEILING BRACE SYSTEM
OPM-0544

SHEET TITLE:
GRIDLOK PARTS

Drawn:	JEB	Job number:	B8769007.01
Design:	PGM	Rev:	
Check:	CC	Scale:	
Date	9/10/2026		

Sheet Number S10A
OF Sheets

NOTE:
ALL DIMENSIONS IN THIS SHEET ARE IN mm. IMPERIAL UNITS IN PARENTHESIS (INCHES).

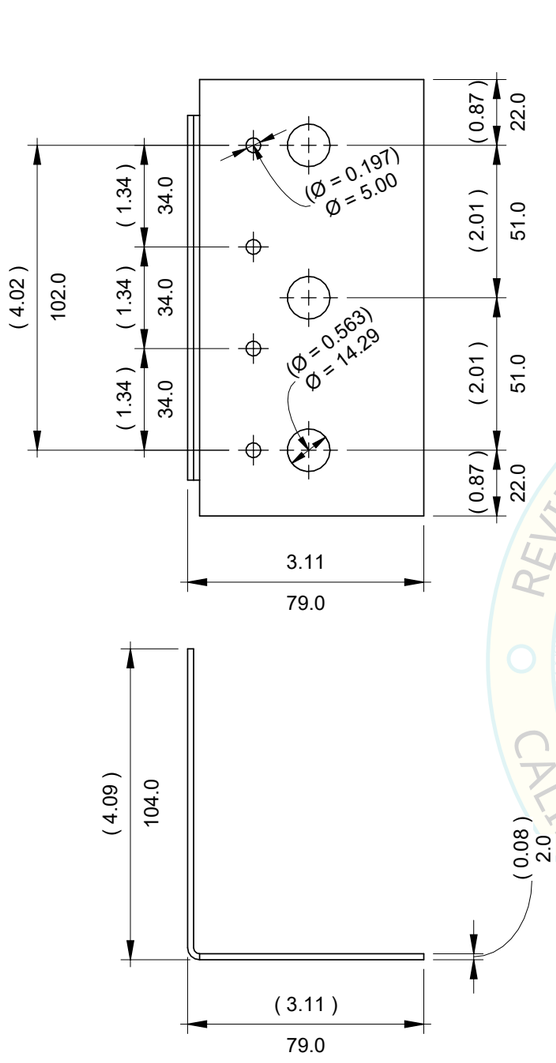

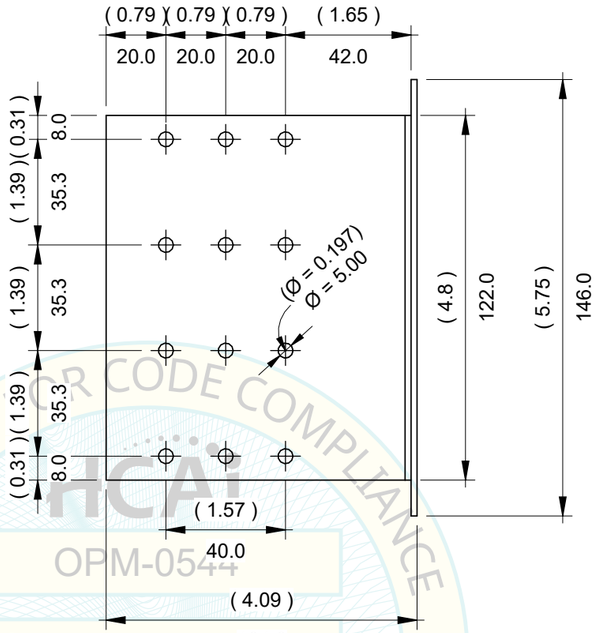

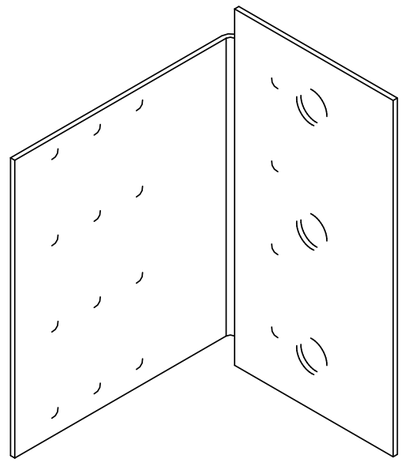

1 GRIDLOK WALL CONNECTOR (BC30)
N.T.S.

REVIEWED FOR CODE COMPLIANCE
HCAI
OPM-0544
BY: Roy Lobo
DATE: 11/01/2026
CALIFORNIA BUILDING CODE, 2025

REGISTERED PROFESSIONAL ENGINEER
CHAD RAYMOND CLOSS
No. S 5946
Exp. Date
11/01/2026
STRUCTURAL
STATE OF CALIFORNIA

DEGENKOLB ENGINEERS
225 Broadway, Suite 1325
San Diego, CA 92101
619.515.0299 PHONE
www.degenkolb.com

GRIDLOK® SUSPENDED CEILING BRACE SYSTEM
OPM-0544

SHEET TITLE:
GRIDLOK PARTS

Drawn:	JEB	Job number:	B8769007.01
Design:	PGM	Rev:	
Check:	CC	Scale:	
Date	9/10/2026		

Sheet Number S10B
OF Sheets

TABLE 1: MAXIMUM S_{DS} VALUES PER EXPANSION ANCHOR DIAMETER, GRIDLOK SPACING, AND BRACE ANGLE 'Θ'

ANCHOR Ø / 'Θ' IN DEG — GRIDLOK SPACING	1/2"(2)			1/2"(3)
	30°-45°	46°-50°	51°-60°	30°-60°
12'-0"x12'-0"	1.38	1.28	0.96	1.38
12'-0"x8'-0"	2.00	1.92	1.44	2.00
8'-0"x8'-0"	2.50	2.50	2.16	2.50
ADVANCESPAN (SEE S3A)	2.00			2.00

TABLE 1A: MAXIMUM C_{PM} VALUES PER EXPANSION ANCHOR DIAMETER, GRIDLOK SPACING, AND BRACE ANGLE 'Θ'

ANCHOR Ø / 'Θ' IN DEG — GRIDLOK SPACING	1/2"(2)			1/2"(3)
	30°-45°	46°-50°	51°-60°	30°-60°
12'-0"x12'-0"	0.70	0.65	0.48	0.70
12'-0"x8'-0"	1.01	0.97	0.73	2.00
8'-0"x8'-0"	1.26	1.26	1.09	2.50
ADVANCESPAN (SEE S3A)	1.01			2.00

TABLE 1 & 1A NOTES:
1. GRIDLOK SPACING AS CHOSEN PER SHEET S3, S3A OR S3B.
2. EFFECTIVE MIN EMBEDMENT (hef) PER MANUFACTURER - HILTI: 2", SIMPSON: 2 3/4"
3. EFFECTIVE MIN EMBEDMENT (hef) PER MANUFACTURER - HILTI: 3 1/4", SIMPSON: 3 7/8"

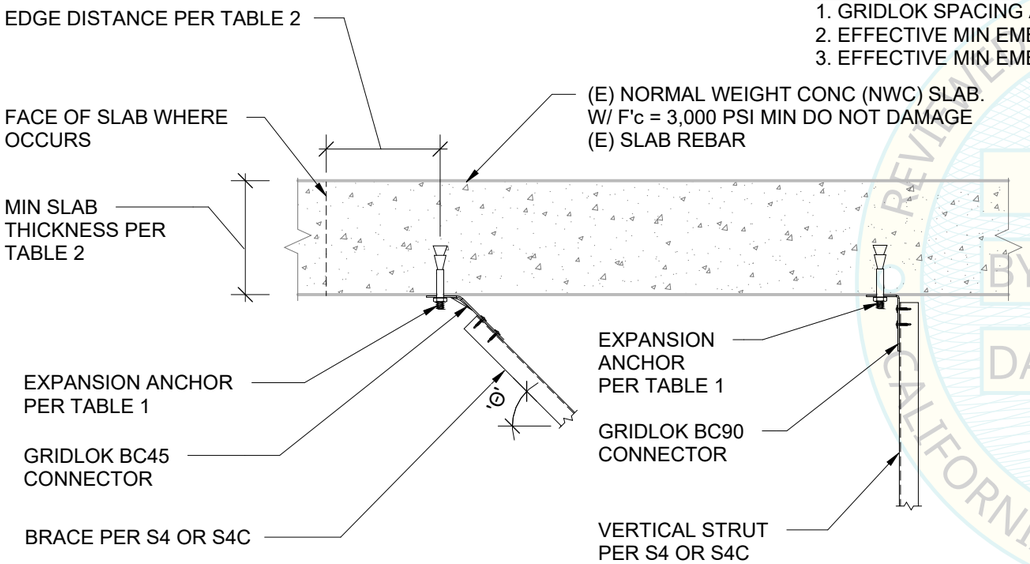

TABLE 2: EXPANSION ANCHOR CONCRETE SLAB INSTALLATION CRITERIA

MANUFACTURER	HILTI		SIMPSON	
NOMINAL ANCHOR DIAMETER (IN)	1/2	1/2	1/2	1/2
EFFECTIVE MIN EMBEDMENT (IN)	2	3 1/4	3 1/4	3 7/8
MIN MEMBER THICKNESS NWC SLAB OR BEAM ONLY (IN)	4.5	6	5.5	6
MIN ANCHOR SPACING (IN)	6 3/4	9 3/4	6	4
MIN EDGE DISTANCE (IN)	6	7 1/2	6	4

NOTES:

1. SEE TABLE 2 FOR EXPANSION ANCHOR CONCRETE SLAB INSTALLATION CRITERIA.

1 CONNECTION TO CONCRETE SLAB

N.T.S.

HCAi OPM-0544 REVIEWED FOR CODE COMPLIANCE BY: Roy Lobo DATE: 11/01/2026 CALIFORNIA BUILDING CODE 2022

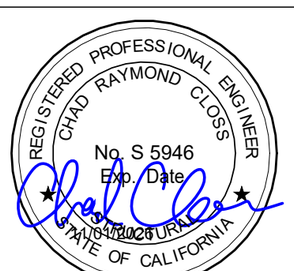

DEGENKOLB ENGINEERS
225 Broadway, Suite 1325
San Diego, CA 92101
619.515.0299 PHONE
www.degenkolb.com

GRIDLOK® SUSPENDED CEILING BRACE SYSTEM
OPM-0544

SHEET TITLE:
CONNECTION DETAILS TO CONCRETE SLAB

Drawn:	JEB	Job number:	B8769007.01
Design:	PGM	Rev:	
Check:	CC	Scale:	AS INDICATED
Date	9/10/2026		

Sheet Number S11 OF Sheets

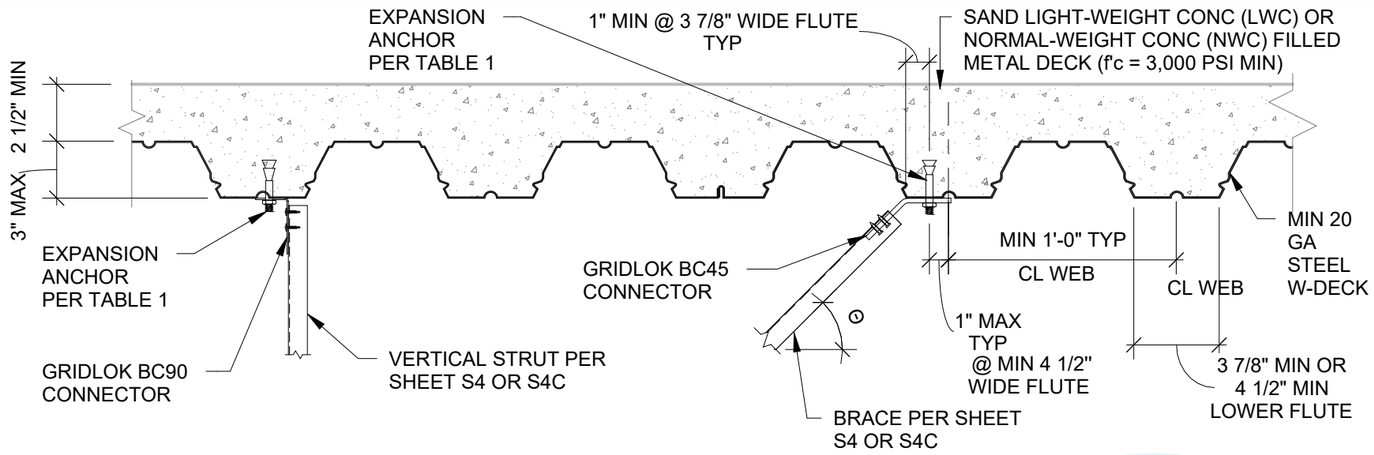

1 CONNECTION AT W3 DECK LOWER FLUTE (OPTION 1)

N.T.S.

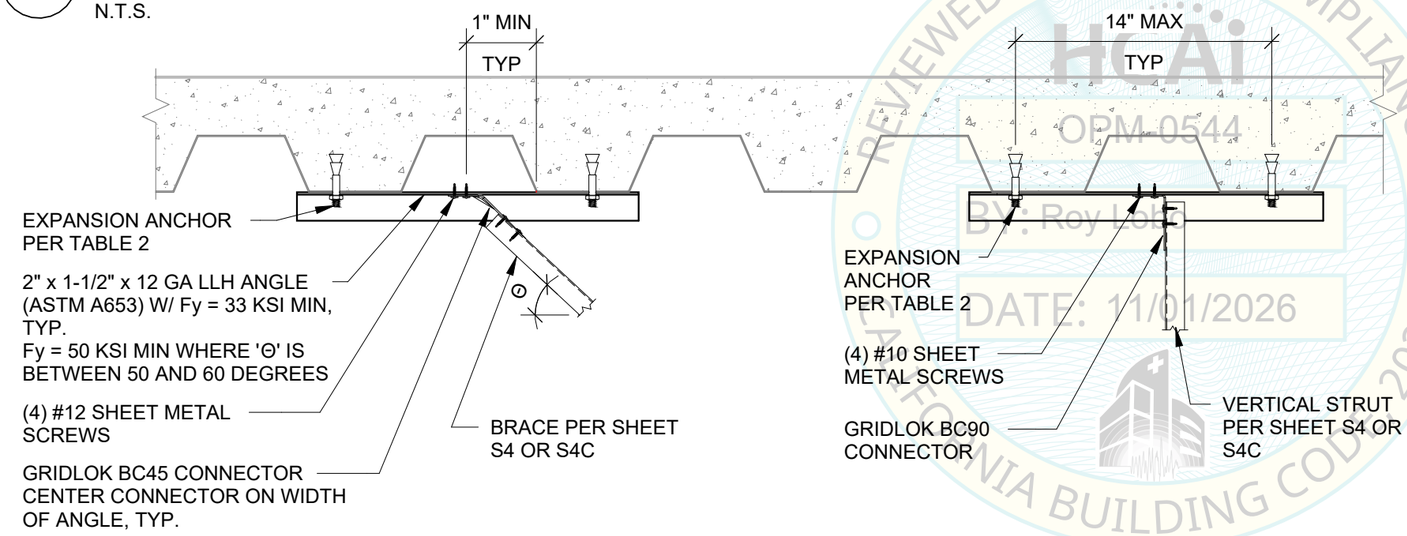

NOTES.
1. SEE GENERAL NOTES FOR ANCHOR REQUIREMENTS.
2. SEE DETAIL 1 FOR REMAINING INFORMATION NOT SHOWN ON DETAIL 2.
3. SEE TABLE 3 FOR EXPANSION ANCHOR W3 DECK INSTALLATION CRITERIA

2 CONNECTION BETWEEN W3 DECK LOWER FLUTES (OPTION 2)

N.T.S.

TABLE 1: MAXIMUM S_{DS} VALUES PER EXPANSION ANCHOR DIAMETER, GRIDLOK SPACING, AND BRACE ANGLE 'Θ' (OPTION 1)

ANCHOR Ø / 'Θ' IN DEG / GRIDLOK SPACING	1/2"(2)					1/2"(3)	
	30°-40°	41°-44°	45°	46°-50°	51°-60°	30°-50°	51°-60°
12'-0"x12'-0"	1.05	0.96	0.94	0.83	0.63	1.38	1.02
12'-0"x8'-0"	1.58	1.44	1.41	1.25	0.95	2.00	1.53
8'-0"x8'-0"	2.36	2.16	2.12	1.87	1.42	2.50	2.30
ADVANCESPAN (SEE S3A)	2.00			1.76	1.33	2.00	2.00

TABLE 2: MAXIMUM S_{DS} VALUES PER EXPANSION ANCHOR DIAMETER, GRIDLOK SPACING, AND BRACE ANGLE 'Θ' (OPTION 2)

ANCHOR Ø / 'Θ' IN DEG / GRIDLOK SPACING	1/2"(2)		1/2"(3)
	30°-50°	51°-60°	30°-60°
12'-0"x12'-0"	1.38	1.26	1.38
12'-0"x8'-0"	2.00	1.89	2.00
8'-0"x8'-0"	2.50		2.50
ADVANCESPAN (SEE S3A)	2.00		2.00

TABLE 1 AND 2 NOTES:
1. GRIDLOK SPACING AS CHOSEN PER SHEET S3, S3A OR S3B.
2. EFFECTIVE MIN EMBEDMENT (hef) PER MANUFACTURER - HILTI: 2", SIMPSON: 2 3/4"
3. EFFECTIVE MIN EMBEDMENT (hef) PER MANUFACTURER - HILTI: 2 1/4", SIMPSON: 4"

TABLE 3: EXPANSION ANCHOR W3 DECK INSTALLATION CRITERIA

MANUFACTURER	HILTI		SIMPSON	
NOMINAL ANCHOR DIAMETER (IN)	1/2"	1/2"	1/2"	1/2"
EFFECTIVE MIN EMBEDMENT (IN)	2	3 1/4	2 1/4	4
MIN ANCHOR SPACING (IN)	5 1/2	5 1/4	6	4

REVIEWED FOR CODE COMPLIANCE
HCAi
OPM-0544
BY: Roy Lobo
DATE: 11/01/2026
CALIFORNIA BUILDING CODE 2025

REGISTERED PROFESSIONAL ENGINEER
CHAD RAYMOND CLOSS
No. S 5946
Exp. Date
11/01/2026
STRUCTURAL
STATE OF CALIFORNIA

DEGENKOLB ENGINEERS
225 Broadway, Suite 1325
San Diego, CA 92101
619.515.0299 PHONE
www.degenkolb.com

GRIDLOK® SUSPENDED CEILING BRACE SYSTEM
OPM-0544

SHEET TITLE:
CONNECTION DETAILS TO COMD (W DECK)

Drawn:	JEB	Job number:	B8769007.01
Design:	PGM	Rev:	
Check:	CC	Scale:	NTS
Date	9/10/2026		

Sheet Number S12 OF Sheets

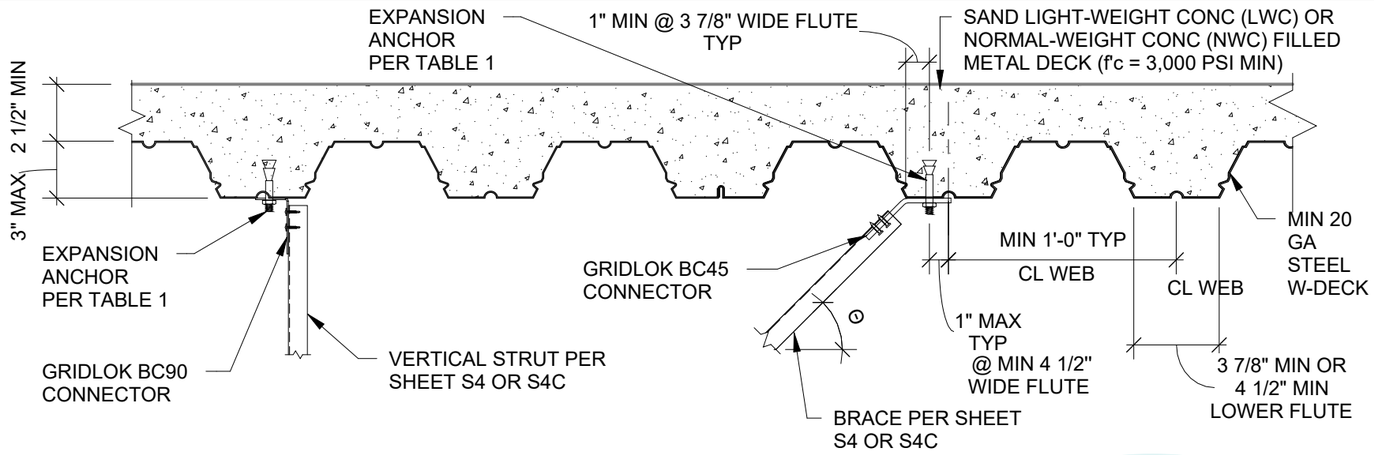

1 CONNECTION AT W DECK LOWER FLUTE (OPTION 1)

N.T.S.

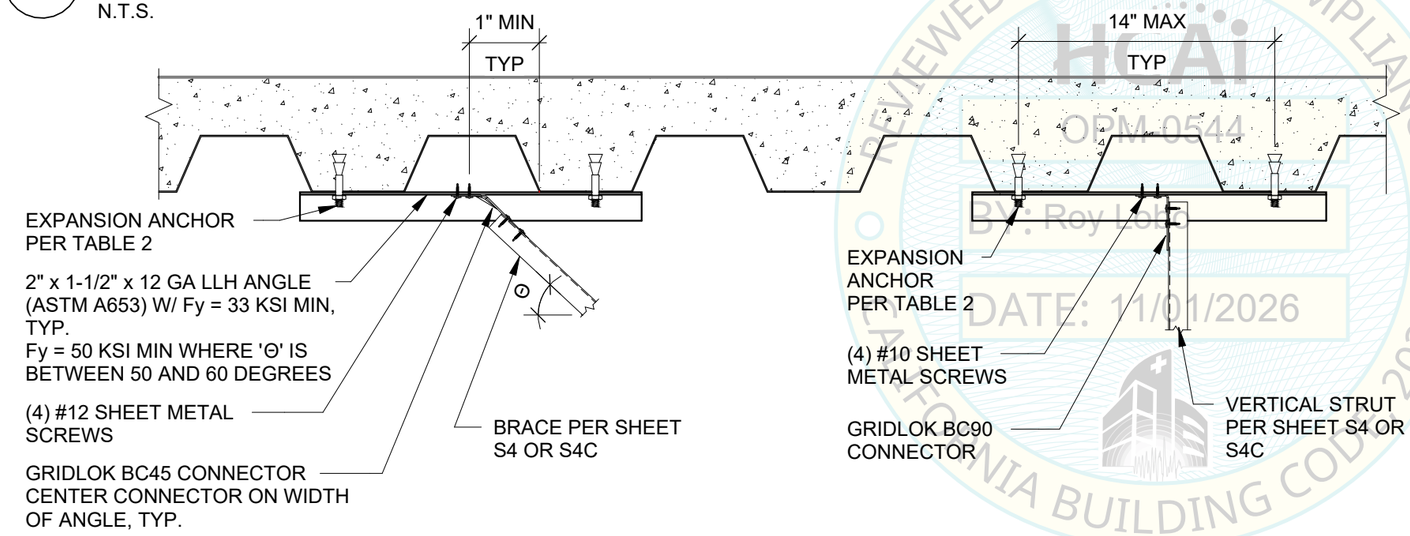

NOTES.
1. SEE GENERAL NOTES FOR ANCHOR REQUIREMENTS.
2. SEE DETAIL 1 FOR REMAINING INFORMATION NOT SHOWN ON DETAIL 2.
3. SEE TABLE 3 FOR EXPANSION ANCHOR W3 DECK INSTALLATION CRITERIA

2 CONNECTION BETWEEN W DECK LOWER FLUTES (OPTION 2)

N.T.S.

TABLE 1: MAXIMUM C_{PM} VALUES PER EXPANSION ANCHOR DIAMETER, GRIDLOK SPACING, AND BRACE ANGLE 'Θ' (OPTION 1)

GRIDLOK SPACING / 'Θ' IN DEG	ANCHOR Ø 1/2"(2) 30°-40°	41°-44°	45°	46°-50°	51°-60°	1/2"(3) 30°-50°	51°-60°
12'-0"x12'-0"	0.53	0.48	0.47	0.42	0.32	0.70	0.51
12'-0"x8'-0"	0.80	0.73	0.71	0.63	0.48	1.01	0.77
8'-0"x8'-0"	1.19	1.09	1.07	0.94	0.72	1.26	1.16
ADVANCESPAN (SEE S3A)	1.01			0.89	0.67	1.01	1.01

TABLE 2: MAXIMUM C_{PM} VALUES PER EXPANSION ANCHOR DIAMETER, GRIDLOK SPACING, AND BRACE ANGLE 'Θ' (OPTION 2)

GRIDLOK SPACING / 'Θ' IN DEG	ANCHOR Ø 1/2"(2) 30°-50°	51°-60°	1/2"(3) 30°-60°
12'-0"x12'-0"	0.70	0.64	0.70
12'-0"x8'-0"	1.01	0.95	1.01
8'-0"x8'-0"	1.26		1.26
ADVANCESPAN (SEE S3A)	1.01		1.01

TABLE 1 AND 2 NOTES:
1. GRIDLOK SPACING AS CHOSEN PER SHEET S3, S3A OR S3B.
2. EFFECTIVE MIN EMBEDMENT (hef) PER MANUFACTURER - HILTI: 2", SIMPSON: 2 3/4"
3. EFFECTIVE MIN EMBEDMENT (hef) PER MANUFACTURER - HILTI: 2 1/4", SIMPSON: 4"

TABLE 3: EXPANSION ANCHOR W3 DECK INSTALLATION CRITERIA

MANUFACTURER	HILTI		SIMPSON	
NOMINAL ANCHOR DIAMETER (IN)	1/2"	1/2"	1/2"	1/2"
EFFECTIVE MIN EMBEDMENT (IN)	2	3 1/4	2 1/4	4
MIN ANCHOR SPACING (IN)	5 1/2	5 1/4	6	4

REVIEWED FOR CODE COMPLIANCE
HCAi
OPM-0544
BY: Roy Lobo
DATE: 11/01/2026
CALIFORNIA BUILDING CODE 2025

REGISTERED PROFESSIONAL ENGINEER
CHAD RAYMOND CLOSS
No. S 5946
Exp. Date
11/01/2026
STRUCTURAL
STATE OF CALIFORNIA

DEGENKOLB ENGINEERS
225 Broadway, Suite 1325
San Diego, CA 92101
619.515.0299 PHONE
www.degenkolb.com

GRIDLOK® SUSPENDED CEILING BRACE SYSTEM
OPM-0544

SHEET TITLE:
CONNECTION DETAILS TO COMD (W DECK)

Drawn:	JEB	Job number:	B8769007.01
Design:	PGM	Rev:	
Check:	CC	Scale:	NTS
Date	9/10/2026		

Sheet Number S12A
OF Sheets

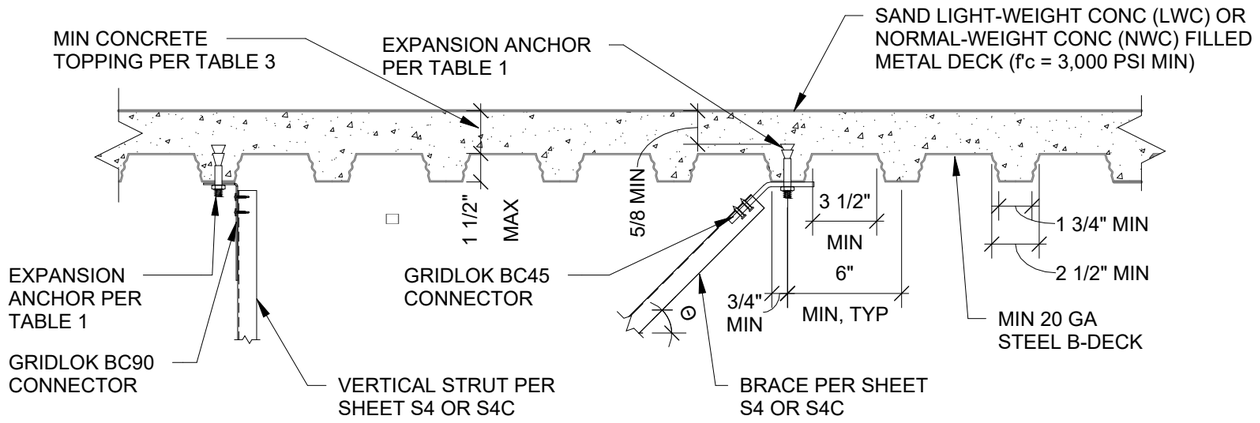

1 CONNECTION AT B DECK LOWER FLUTE (OPTION 1)

N.T.S.

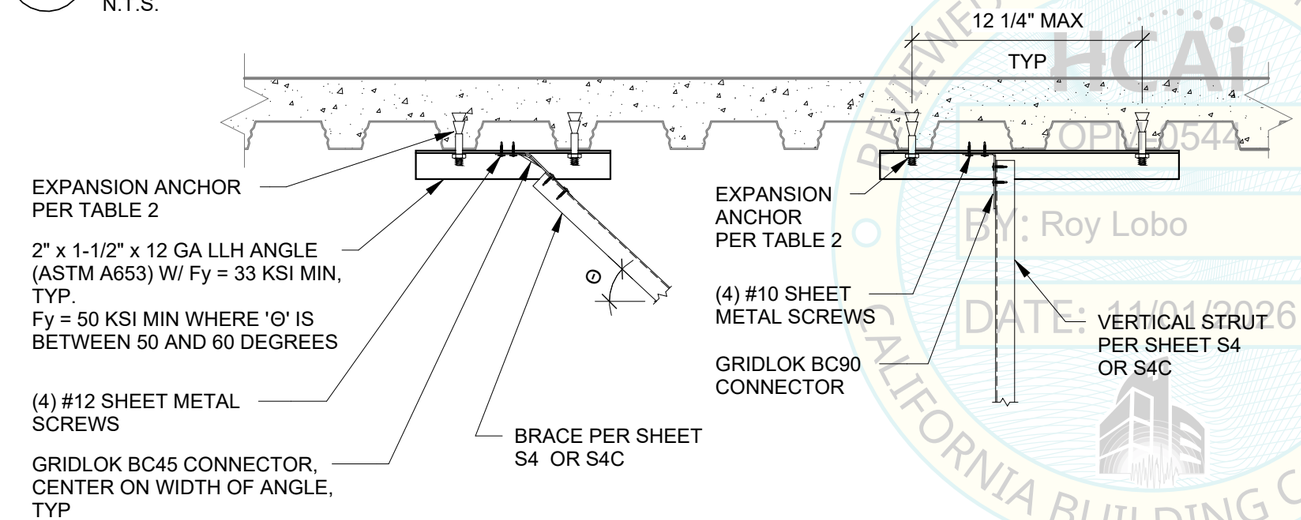

NOTES.
1. SEE GENERAL NOTES FOR ANCHOR REQUIREMENTS.
2. SEE DETAIL 1 FOR REMAINING INFORMATION NOT SHOWN ON DETAIL 2.
3. SEE TABLE 3 FOR EXPANSION ANCHOR B DECK INSTALLATION CRITERIA

2 CONNECTION BETWEEN B DECK LOWER FLUTES (OPTION 2)

N.T.S.

TABLE 1: MAXIMUM S_{DS} VALUES PER EXPANSION ANCHOR DIAMETER, GRIDLOK SPACING, AND BRACE ANGLE 'Θ' (OPTION 1)

ANCHOR Ø / GRIDLOK SPACING \ 'Θ' IN DEG	1/2" W/ 2" EMBED					5/8" W/ 2 3/4" EMBED				
	30°-40°	41°-44°	45°	46°-50°	40°-60°	30°-40°	41°-44°	45°	46°-50°	51°-60°
12'-0"x12'-0"	0.90	0.80	0.78	0.66	0.48	1.38	1.35	1.30	1.13	0.82
12'-0"x8'-0"	1.35	1.20	1.17	0.99	0.72	2.00		1.95	1.70	1.23
8'-0"x8'-0"	2.03	1.80	1.76	1.49	1.08	2.50				1.85
ADVANCESPAN (SEE S3A)	1.91	1.69	1.65	1.40	1.02	2.00				1.74

TABLE 2: MAXIMUM S_{DS} VALUES PER EXPANSION ANCHOR DIAMETER, GRIDLOK SPACING, AND BRACE ANGLE 'Θ' (OPTION 2)

ANCHOR Ø / GRIDLOK SPACING \ 'Θ' IN DEG	1/2" W/ 2" EMBED			5/8" W/ 2 3/4" EMBED
	30°-45°	46°-50°	51°-60°	30°-60°
12'-0"x12'-0"	1.38	1.32	0.96	1.38
12'-0"x8'-0"	2.00	1.98	1.44	2.00
8'-0"x8'-0"	2.50		2.16	2.50
ADVANCESPAN (SEE S3A)	2.00			2.00

TABLE 1 AND 2 NOTES:
1. GRIDLOK SPACING AS CHOSEN PER SHEET S3, S3A OR S3B.
2. EFFECTIVE MIN EMBEDMENT (h_{ef}) PER TABLE 3.

TABLE 3: EXPANSION ANCHOR B DECK INSTALLATION CRITERIA

NOMINAL ANCHOR DIAMETER (IN)	1/2"	5/8"
EFFECTIVE MIN EMBEDMENT (IN)	2	2 3/4
MIN ANCHOR SPACING (IN)	6 3/4	8 1/4
MIN CONCRETE TOPPING (IN)	2 1/4	3 1/4

REVIEWED FOR CODE COMPLIANCE
HCAi
OPM-0544
BY: Roy Lobo
DATE: 11/01/2026
CALIFORNIA BUILDING CODE

REGISTERED PROFESSIONAL ENGINEER
CHAD RAYMOND CLOSS
No. S 5946
Exp. Date
STATE OF CALIFORNIA
9/10/2026

DEGENKOLB ENGINEERS
225 Broadway, Suite 1325
San Diego, CA 92101
619.515.0299 PHONE
www.degenkolb.com

GRIDLOK® SUSPENDED CEILING BRACE SYSTEM
OPM-0544

SHEET TITLE:
CONNECTION DETAILS TO COMD (B DECK)

Drawn:	JEB	Job number:	B8769007.01
Design:	PGM	Rev:	
Check:	CC	Scale:	NTS
Date	9/10/2026		

Sheet Number S13 OF Sheets

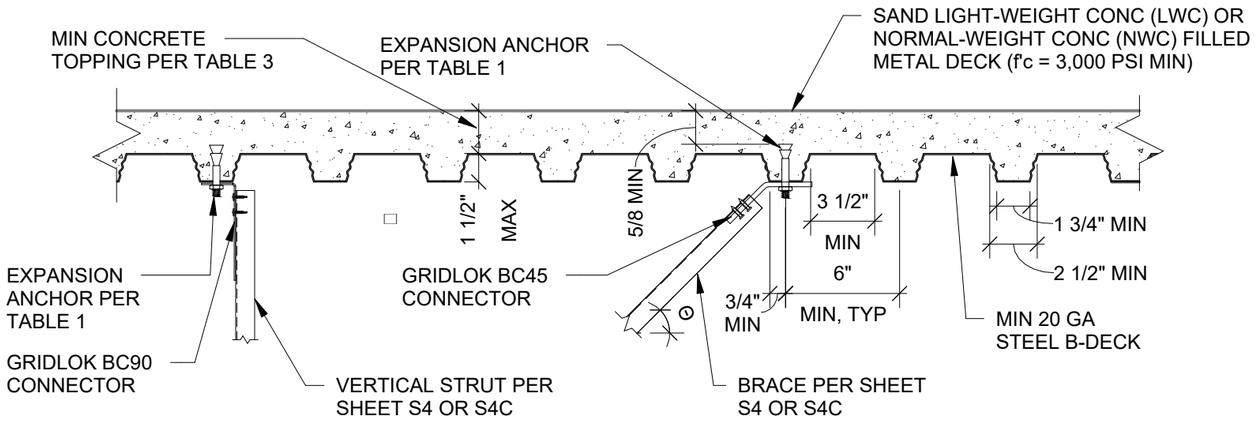

1 CONNECTION AT B DECK LOWER FLUTE (OPTION 1)

N.T.S.

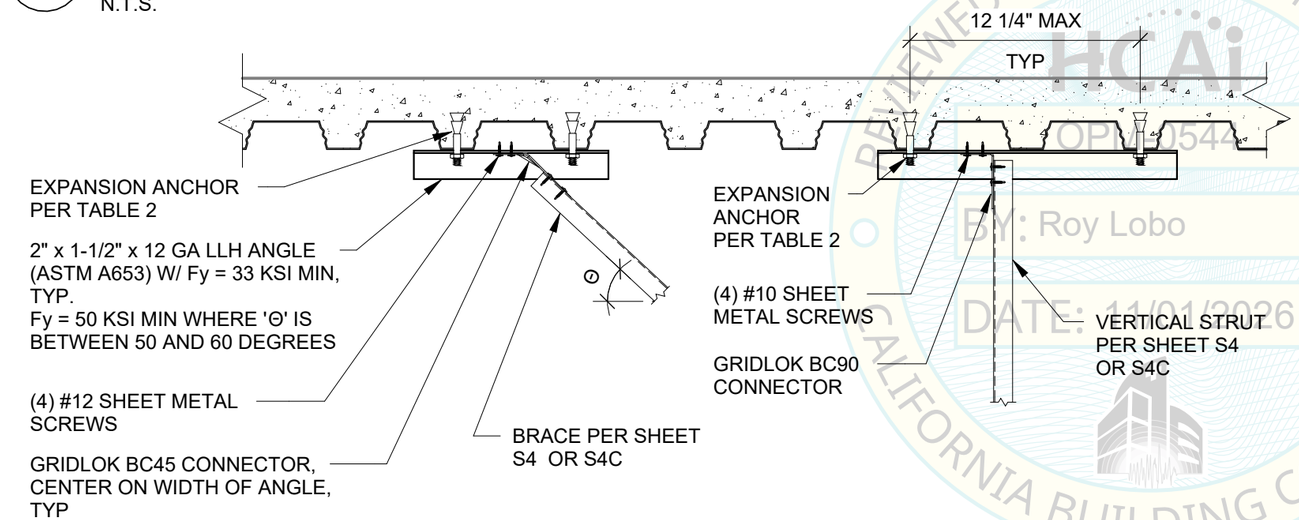

NOTES.
1. SEE GENERAL NOTES FOR ANCHOR REQUIREMENTS.
2. SEE DETAIL 1 FOR REMAINING INFORMATION NOT SHOWN ON DETAIL 2.
3. SEE TABLE 3 FOR EXPANSION ANCHOR B DECK INSTALLATION CRITERIA

2 CONNECTION BETWEEN B DECK LOWER FLUTES (OPTION 2)

N.T.S.

TABLE 1: MAXIMUM C_{PM} VALUES PER EXPANSION ANCHOR DIAMETER, GRIDLOK SPACING, AND BRACE ANGLE 'Θ' (OPTION 1)

ANCHOR Ø / GRIDLOK SPACING \ 'Θ' IN DEG	1/2" W/ 2" EMBED					5/8" W/ 2 3/4" EMBED				
	30°-40°	41°-44°	45°	46°-50°	40°-60°	30°-40°	41°-44°	45°	46°-50°	51°-60°
12'-0"x12'-0"	0.45	0.40	0.39	0.33	0.24	0.70	0.68	0.66	0.57	0.41
12'-0"x8'-0"	0.68	0.60	0.59	0.50	0.36	1.01		0.98	0.86	0.62
8'-0"x8'-0"	1.02	0.91	0.89	0.75	0.54	1.26				0.93
ADVANCESPAN (SEE S3A)	0.96	0.85	0.83	0.71	0.51	1.01				0.88

TABLE 2: MAXIMUM C_{PM} VALUES PER EXPANSION ANCHOR DIAMETER, GRIDLOK SPACING, AND BRACE ANGLE 'Θ' (OPTION 2)

ANCHOR Ø / GRIDLOK SPACING \ 'Θ' IN DEG	1/2" W/ 2" EMBED			5/8" W/ 2 3/4" EMBED
	30°-45°	46°-50°	51°-60°	30°-60°
12'-0"x12'-0"	0.70	0.67	0.48	0.70
12'-0"x8'-0"	1.01	1.00	0.73	1.01
8'-0"x8'-0"	1.26		1.09	1.26
ADVANCESPAN (SEE S3A)	1.01			1.01

TABLE 1 AND 2 NOTES:
1. GRIDLOK SPACING AS CHOSEN PER SHEET S3, S3A OR S3B.
2. EFFECTIVE MIN EMBEDMENT (h_{ef}) PER TABLE 3.

TABLE 3: EXPANSION ANCHOR B DECK INSTALLATION CRITERIA

NOMINAL ANCHOR DIAMETER (IN)	1/2"	5/8"
EFFECTIVE MIN EMBEDMENT (IN)	2	2 3/4
MIN ANCHOR SPACING (IN)	6 3/4	8 1/4
MIN CONCRETE TOPPING (IN)	2 1/4	3 1/4

REVIEWED FOR CODE COMPLIANCE
HCAi
OPM-0544
BY: Roy Lobo
DATE: 11/01/2026
CALIFORNIA BUILDING CODE

REGISTERED PROFESSIONAL ENGINEER
CHAD RAYMOND CLOSS
No. S 5946
Exp. Date
9/30/2026
STATE OF CALIFORNIA

DEGENKOLB ENGINEERS
225 Broadway, Suite 1325
San Diego, CA 92101
619.515.0299 PHONE
www.degenkolb.com

GRIDLOK® SUSPENDED CEILING BRACE SYSTEM
OPM-0544

SHEET TITLE:
CONNECTION DETAILS TO COMD (B DECK)

Drawn:	JEB	Job number:	B8769007.01
Design:	PGM	Rev:	
Check:	CC	Scale:	NTS
Date	9/10/2026		

Sheet Number S13A
OF Sheets

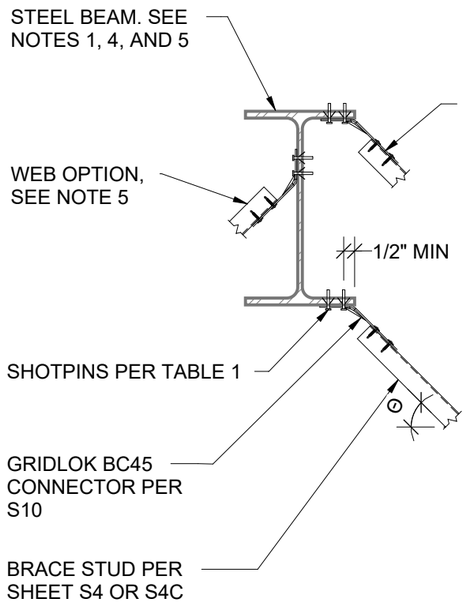

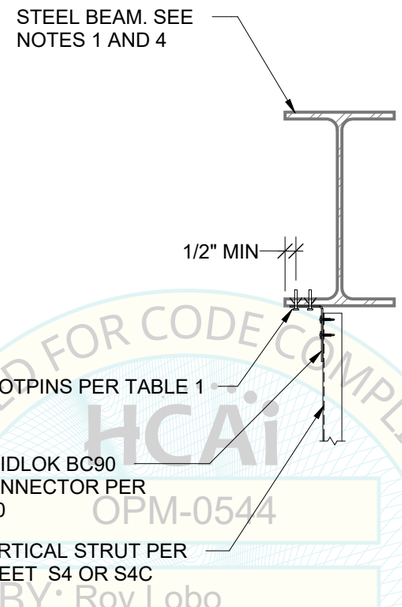

TABLE 1: MAXIMUM S_{DS} VALUES PER NUMBER OF SHOTPINS, GRIDLOK SPACING, AND BRACE ANGLE 'Θ'

GRIDLOK SPACING \ NUMBER OF SHOTPINS / 'Θ' IN DEG	2 (SEE TABLE NOTE 1)					4
	30°-40°	41°-44°	45°	46°-50	51°-60°	30°-60°
12'-0"x12'-0"	1.15	1.08	1.06	0.96	0.74	1.38
12'-0"x8'-0"	1.73	1.61	1.58	1.43	1.11	2.00
8'-0"x8'-0"	2.50	2.42	2.38	2.15	1.67	2.50
ADVANCESPAN (SEE S3A)	2.00				1.57	2.00

TABLE 1 NOTES:
1. SHOTPINS INSTALLED IN STAGGERED HOLES ON DIAGONAL.
2. GRIDLOK SPACING AS CHOSEN PER SHEET S3, S3A OR S3B.

TABLE 1A: MAXIMUM C_{PM} VALUES PER NUMBER OF SHOTPINS, GRIDLOK SPACING, AND BRACE ANGLE 'Θ'

GRIDLOK SPACING \ NUMBER OF SHOTPINS / 'Θ' IN DEG	2 (SEE TABLE NOTE 1)					4
	30°-40°	41°-44°	45°	46°-50	51°-60°	30°-60°
12'-0"x12'-0"	0.58	0.54	0.53	0.48	0.37	0.70
12'-0"x8'-0"	0.87	0.81	0.80	0.72	0.56	1.01
8'-0"x8'-0"	1.26	1.22	1.20	1.08	0.84	1.26
ADVANCESPAN (SEE S3A)	1.01				0.79	1.01

TABLE 1A NOTES:
1. SHOTPINS INSTALLED IN STAGGERED HOLES ON DIAGONAL.
2. GRIDLOK SPACING AS CHOSEN PER SHEET S3, S3A OR S3B.

NOTES:

1. BEAM FLANGE THICKNESS SHALL NOT BE LESS THAN 1/4" OR MORE THAN 3/8".
2. FRAMING MEMBERS SHALL BE DESIGNED TO CARRY CEILING LOADS, RDP TO VERIFY.
3. RDP IN RESPONSIBLE CHARGE, I.O.R. AND CONTRACTOR SHALL VERIFY THAT NO PAF IS INSTALLED IN THE PROTECTED ZONE OF ANY STEEL MEMBER, SEE ANSI /AISC 341-10.
4. MINIMUM Fy = 36 KSI FOR STEEL BEAM
5. RDP IN RESPONSIBLE CHARGE TO CONFIRM THAT STRUCTURAL STEEL BEAM IS SUFFICIENT TO DEVELOP THE LOAD WHERE THE BRACE IS PERPENDICULAR TO THE BEAM.
6. FOR PAF INSTALLED IN STEEL, THE FASTENER PENETRATION SHALL HAVE THE ENTIRE POINTED END OF THE FASTENER DRIVEN THROUGH THE STEEL MEMBER, EXCEPT AS NOTED IN CURRENT REPORTS FROM TESTING AGENCIES ACCEPTABLE TO HCAI.

1 CONNECTION TO STRUCTURAL STEEL

1 1/2" = 1'-0"

REVIEWED FOR CODE COMPLIANCE
HCAi
OPM-0544
BY: Roy Lobo
DATE: 11/01/2026
CALIFORNIA BUILDING CODE 2025



DEGENKOLB ENGINEERS
225 Broadway, Suite 1325
San Diego, CA 92101
619.515.0299 PHONE
www.degenkolb.com

GRIDLOK® SUSPENDED CEILING BRACE SYSTEM
OPM-0544

SHEET TITLE:
CONNECTION DETAILS TO STEEL BEAM

Drawn:	JEB	Job number:	B8769007.01
Design:	PGM	Rev:	
Check:	CC	Scale:	AS INDICATED
Date	9/10/2026		

Sheet Number S14 OF Sheets

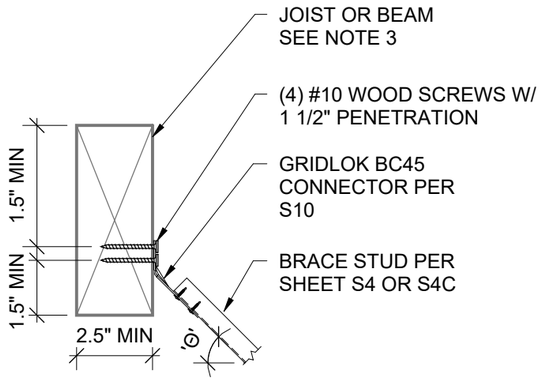

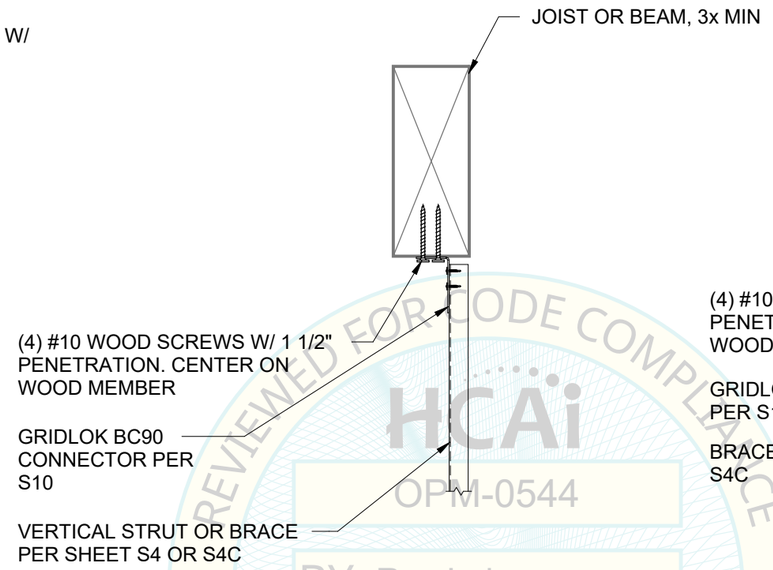

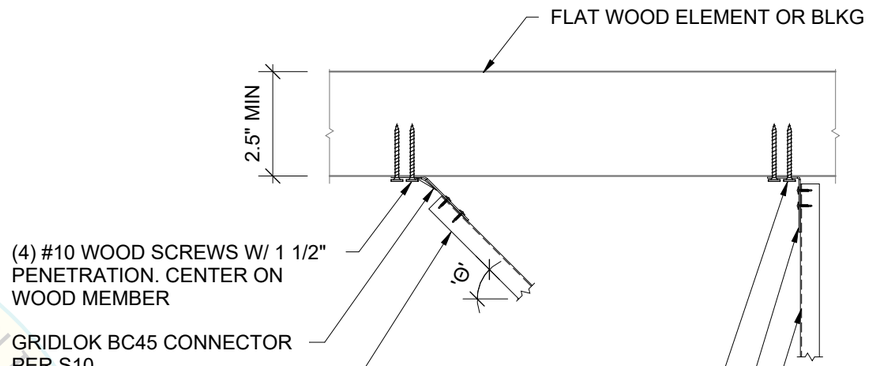

REVIEWED FOR CODE COMPLIANCE
HCAi
OPM-0544
BY: Roy Lobo
DATE: 11/01/2026
CALIFORNIA BUILDING CODE, 2025

NOTES:

1. FRAMING MEMBERS SHALL BE DESIGNED TO CARRY CEILING LOADS, RDP TO VERIFY.
2. SCREWS SHOWN ARE BASED ON DOUGLAS FIR LARCH WOOD MEMBERS. (WOOD SCREWS TO BE IN CONFORMANCE w/ ANSI B18.6.1)
3. RDP IN RESPONSIBLE CHARGE TO CONFIRM THAT THE WOOD BEAM IS SUFFICIENT TO CARRY THE LOAD FROM THE BRACE.
4. ALL BRACE ANGLES, 'Θ', RANGING FROM 30° TO 60° ARE APPLICABLE.

1 CONNECTION TO SAWN TIMBER

1 1/2" = 1'-0"



DEGENKOLB ENGINEERS
225 Broadway, Suite 1325
San Diego, CA 92101
619.515.0299 PHONE
www.degenkolb.com

GRIDLOK® SUSPENDED CEILING BRACE SYSTEM
OPM-0544

SHEET TITLE:
CONNECTION DETAILS TO WOOD

Drawn:	JEB	Job number:	B8769007.01
Design:	PGM	Rev:	
Check:	CC	Scale:	AS INDICATED
Date	9/10/2026		

Sheet Number S15 OF Sheets

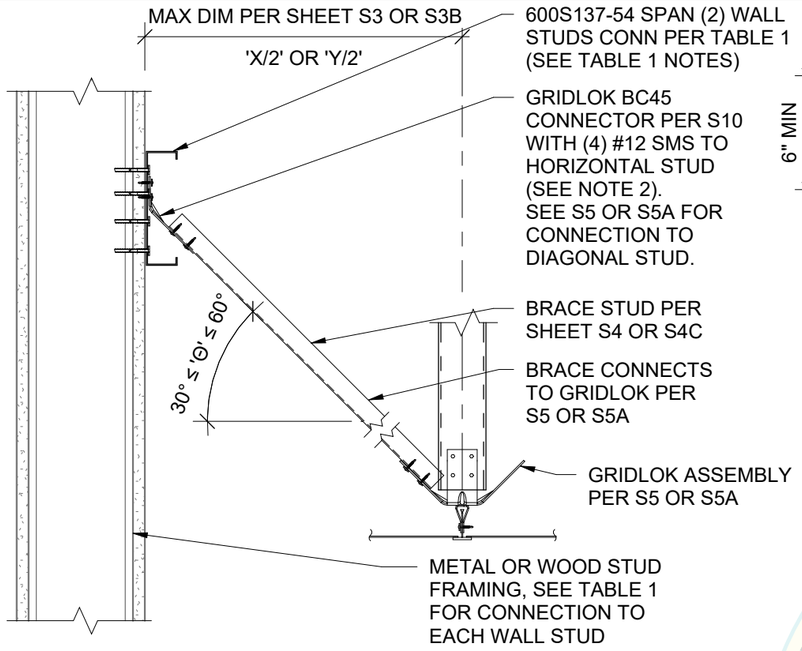

1 CONNECTION TO METAL/ WOOD STUD WALL

N.T.S.

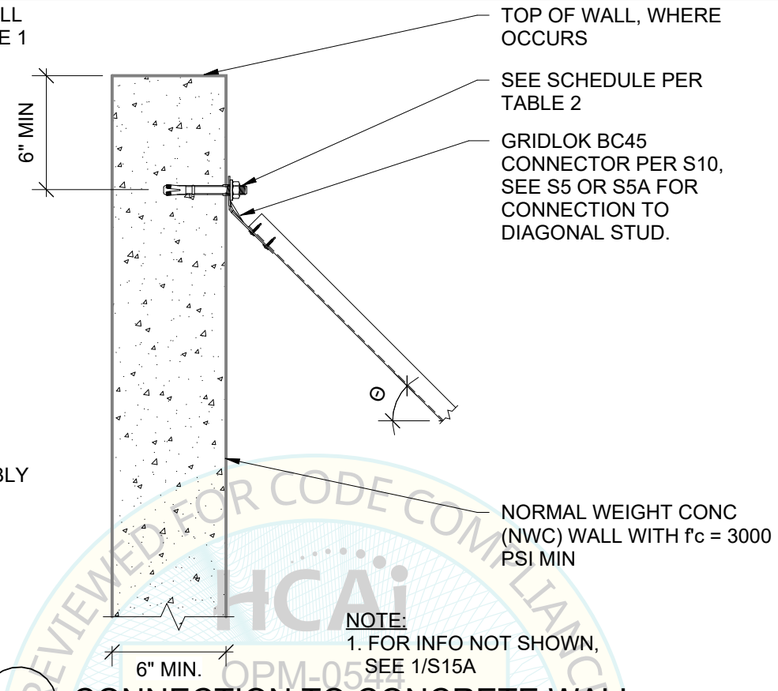

NOTE:
1. FOR INFO NOT SHOWN, SEE 1/S15A

2 CONNECTION TO CONCRETE WALL

N.T.S.

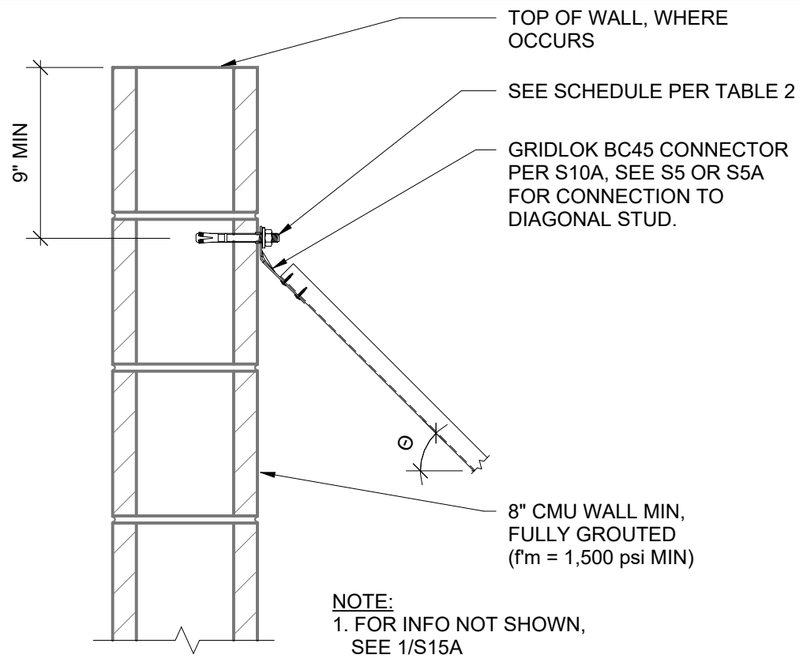

NOTE:
1. FOR INFO NOT SHOWN, SEE 1/S15A

3 CONNECTION TO CMU WALL

N.T.S.

TABLE 1: SCREW SCHEDULE

WALL STUD/ GAUGE	MAX LAYER OF GYP BD	CONN TO EACH WALL STUD
METAL STUDS 20 GA MIN (33 KSI)[1]	1	(8) #10 SMS
	2	(10) #10 SMS
METAL STUDS 18 GA MIN (33 KSI)	1	(5) #12 SMS
	2	(6) #12 SMS
WOOD STUDS, 2x MIN.	2	(6) #14 WOOD SCREWS W/ MIN 2 1/2" PENETRATION TO EA STUD[2]

TABLE 1 NOTES:
1. WHERE (8) SCREWS OR MORE ARE REQUIRED, USE 800S137-54 IN LIEU OF 600S137-54.
2. FOR BRACE ANGLES, 'Θ', RANGING BETWEEN 30° TO 55°, (5) #14 WOOD SCREWS ALLOWED TO BE USED
3. FOR WOOD CONN, SEE NOTES ON S15 FOR ATTACHMENTS.

TABLE 2: ANCHOR SCHEDULE

WALL TYPE	ANCHOR TYPE	DIAMETER (IN)	EFFECTIVE MIN EMBEDMENT (IN)
CONCRETE	KB-TZ2	1/2	3 1/4
	STRONG-BOLT 2		3 7/8
CMU	KH-EZ	5/8	3.88
	TITEN-HD		4 1/2

TABLE 2 NOTES:
1. SCREW ANCHORS MUST BE INSTALLED IN THE FACE OF CMU SHELLS PER ICC REPORTS LISTED IN THE GENERAL NOTES.
2. WHEN USING SCREW ANCHOR ATTACHMENT TO CMU WALL, SEOR MUST VERIFY:
   A. MASONRY IS NOT CRACKED AS DEFINED IN ICC REPORTS LISTED IN THE GENERAL NOTES; CALCULATION REQ'D TO SHOW MASONRY WALL WOULD NOT CRACK UNDER DESIGN EQ LOADS UNDER ALL SERVICE LOADS CONDITIONS; WALL HAS TO REMAIN ELASTIC.
   B. PRODUCT USE REQUIREMENTS IN ACCORDANCE WITH ICC REPORTS LISTED IN THE GENERAL NOTES IS SATISFIED.
3. OVERSTRENGTH FACTOR AS REQUIRED FOR ANCHORAGE TO CONCRETE AND CMU.

NOTES:

1. RDP SHALL DESIGN OR VERIFY WALLS FOR THE CEILING LOADS
2. TABLE 1 AND 2 ARE APPLICABLE TO ALL BRACE ANGLES, 'Θ', RANGING FROM 30° TO 60°.
3. WALL CONNECTION PERMITTED ONLY AT ATTACHED CEILING JOINT. SEE S3 OR S3B.

REVIEWED FOR CODE COMPLIANCE
HCAi
OPM-0544
BY: Roy Lobo
DATE: 11/01/2026
CALIFORNIA BUILDING CODE 2025



DEGENKOLB ENGINEERS
225 Broadway, Suite 1325
San Diego, CA 92101
619.515.0299 PHONE
www.degenkolb.com

GRIDLOK® SUSPENDED CEILING BRACE SYSTEM
OPM-0544

SHEET TITLE:
WALL CONNECTION DETAILS

30° - 60°

Drawn:	JEB	Job number:	B8769007.01
Design:	JEL	Rev:	
Check:	CC	Scale:	AS INDICATED
Date	9/10/2026		

Sheet Number S15A

OF Sheets

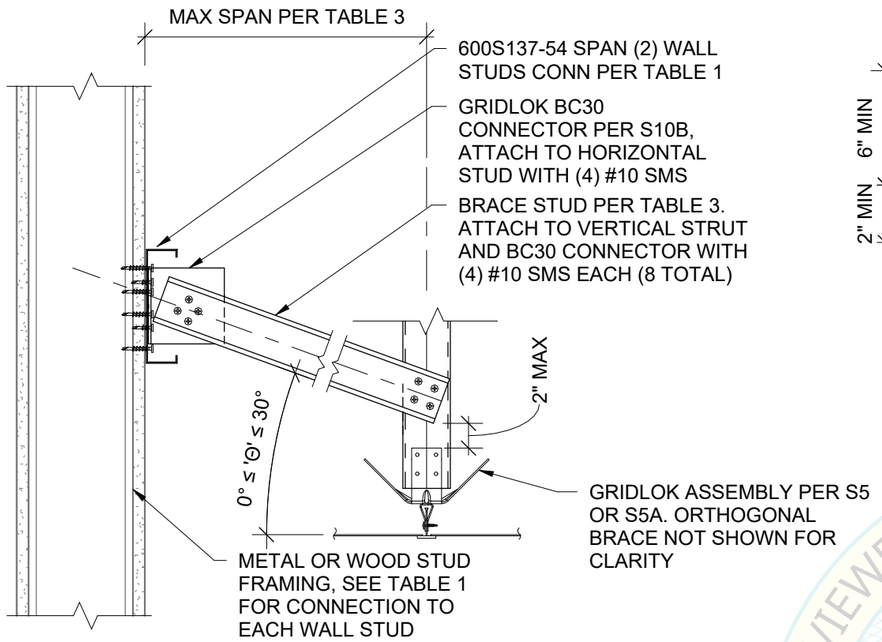

1 CONNECTION TO METAL/ WOOD STUD WALL

N.T.S.

TABLE 1: SCREW SCHEDULE		
WALL STUD/ GAUGE	**MAX LAYER OF GYP BD**	**CONN TO EACH WALL STUD**
METAL STUDS 20 GA MIN (33 KSI)	1	(5) #10 SMS
	2	(6) #10 SMS
METAL STUDS 18 GA MIN (33 KSI)	1	(4) #10 SMS
	2	(4) #10 SMS
WOOD STUDS, 2x MIN.	2	(4) #10 WOOD SCREWS W/ MIN 2" PENETRATION TO EA STUD

TABLE 1 NOTES:

1. FOR WOOD CONN, SEE NOTES ON S15 FOR ATTACHMENTS.

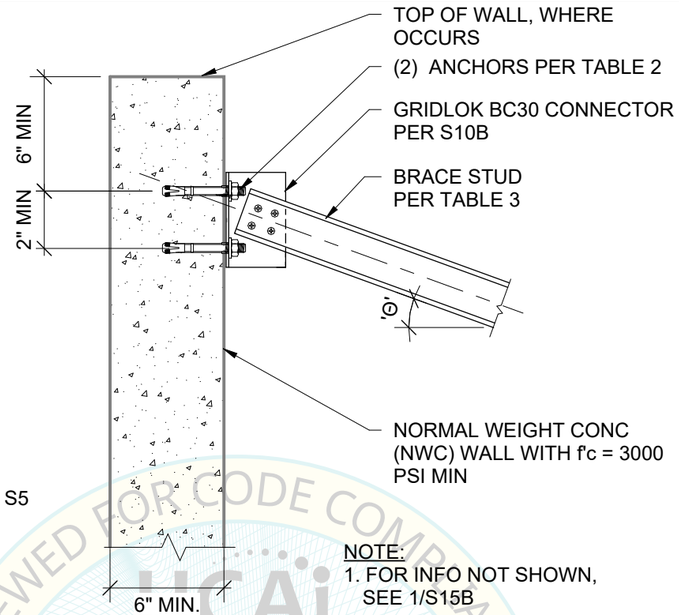

NOTE:
1. FOR INFO NOT SHOWN, SEE 1/S15B

2 CONNECTION TO CONCRETE WALL

N.T.S.

TABLE 2: ANCHOR SCHEDULE			
WALL TYPE	**ANCHOR TYPE**	**DIAMETER (IN)**	**EFFECTIVE MIN EMBEDMENT (IN)**
CONCRETE	KB-TZ2	1/2	3 1/4
	STRONG-BOLT 2		3 7/8
CMU	KH-EZ	5/8	3.88
	TITEN-HD		4 1/2

TABLE 2 NOTES:

1. SCREW ANCHORS MUST BE INSTALLED IN THE FACE OF CMU SHELLS PER ICC REPORTS LISTED IN THE GENERAL NOTES.
2. WHEN USING SCREW ANCHOR ATTACHMENT TO CMU WALL, SEOR MUST VERIFY:
   A. MASONRY IS NOT CRACKED AS DEFINED IN ICC REPORTS LISTED IN THE GENERAL NOTES; CALCULATION REQ'D TO SHOW MASONRY WALL WOULD NOT CRACK UNDER DESIGN EQ LOADS UNDER ALL SERVICE LOADS CONDITIONS; WALL HAS TO REMAIN ELASTIC.
   B. PRODUCT USE REQUIREMENTS IN ACCORDANCE WITH ICC REPORTS LISTED IN THE GENERAL NOTES IS SATISFIED.
3. OVERSTRENGTH FACTOR AS REQUIRED FOR ANCHORAGE TO CONCRETE AND CMU.

3 CONNECTION TO CMU WALL

N.T.S.

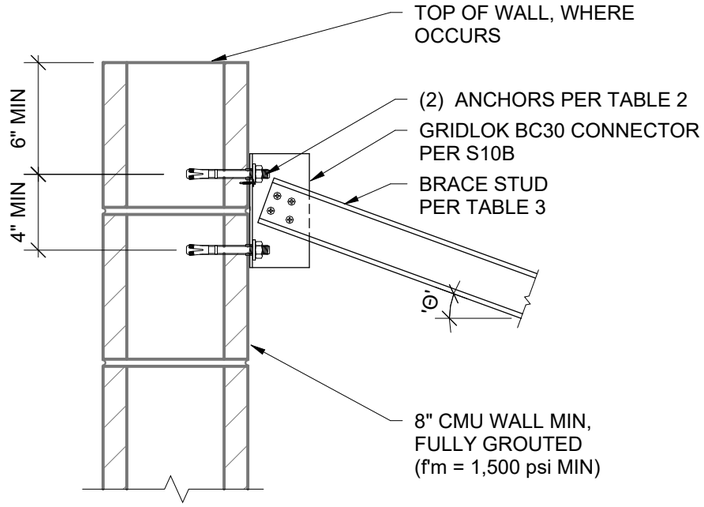

NOTE:
1. FOR INFO NOT SHOWN, SEE 1/S15B

TABLE 3: BRACE STUD SCHEDULE	
MAX SPAN	**BRACE STUD SIZE**
6'-6"	250S162-33 (20 GA)
14'-0"	400S300-54 (16 GA)

SHEET NOTES:

1. RDP SHALL DESIGN OR VERIFY WALLS FOR THE CEILING LOADS
2. TABLE 1 AND 2 ARE APPLICABLE TO BRACE ANGLES, 'Θ', RANGING FROM 0° TO 30°.
3. WALL CONNECTION PERMITTED ONLY AT ATTACHED CEILING JOINT. SEE S3 OR S3B.

REVIEWED FOR CODE COMPLIANCE
HCAi
OPM-0544
BY: Roy Lobo
DATE: 11/01/2026
CALIFORNIA BUILDING CODE 2025

REGISTERED PROFESSIONAL ENGINEER
CHAD RAYMOND CLOSS
No. S 5946
Exp. Date
11/01/2026
STRUCTURAL
STATE OF CALIFORNIA

DEGENKOLB ENGINEERS
225 Broadway, Suite 1325
San Diego, CA 92101
619.515.0299 PHONE
www.degenkolb.com

GRIDLOK® SUSPENDED CEILING BRACE SYSTEM
OPM-0544

SHEET TITLE:
WALL CONNECTION DETAILS (ALTERNATE CONNECTION ABOVE GRIDLOK)

0° - 30°

Drawn:	JEB	Job number:	B8769007.01
Design:	JEL	Rev:	
Check:	CC	Scale:	AS INDICATED
Date	9/10/2026		

Sheet Number S15B

OF Sheets

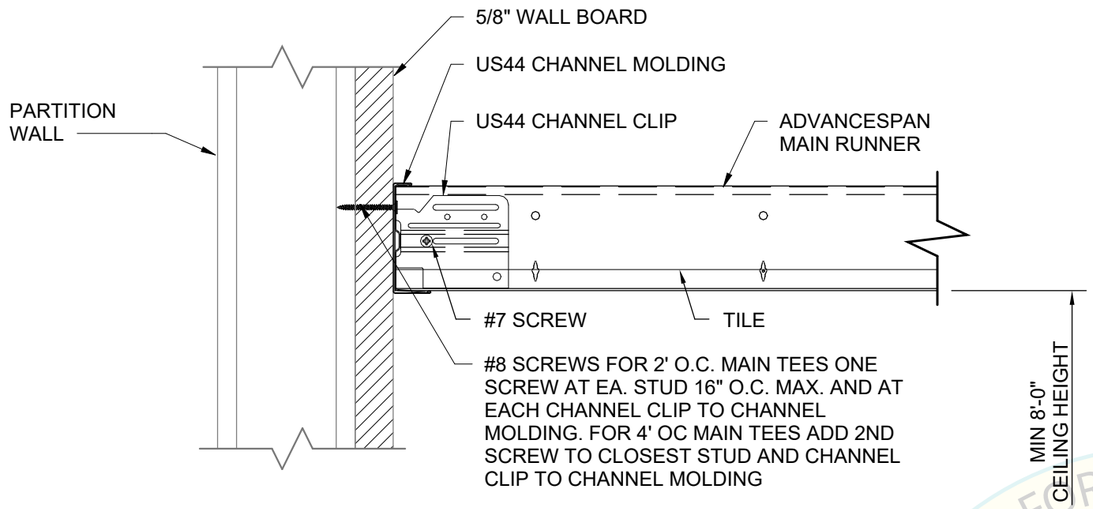

NOTES:
1. ADVANCESPAN CHANNEL ASSEMBLY AND RUNNERS PER TABLE 1 OF SHEET S2

1 ATTACHED SIDE - MAIN RUNNER (ADVANCESPAN ONLY)

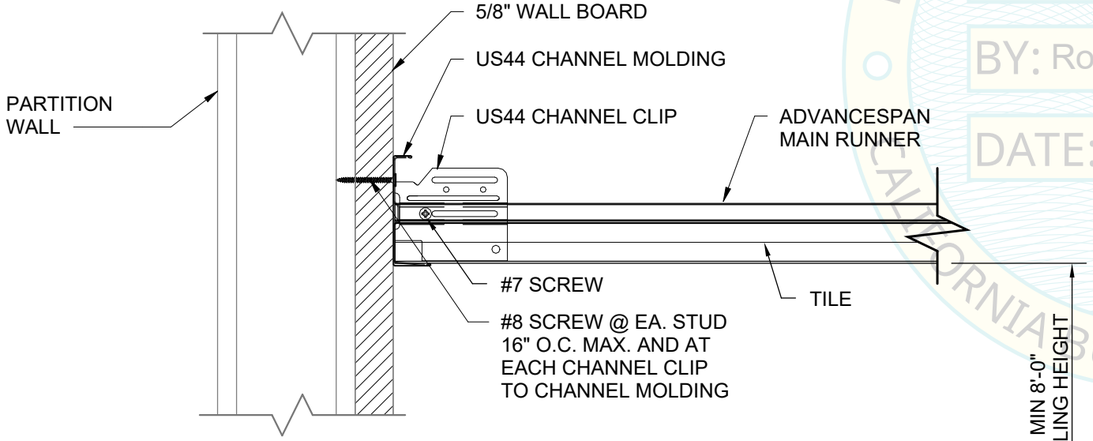

NOTES:
1. ADVANCESPAN CHANNEL ASSEMBLY AND RUNNERS PER TABLE 1 OF SHEET S2

2 ATTACHED SIDE - CROSS RUNNER (ADVANCESPAN ONLY)

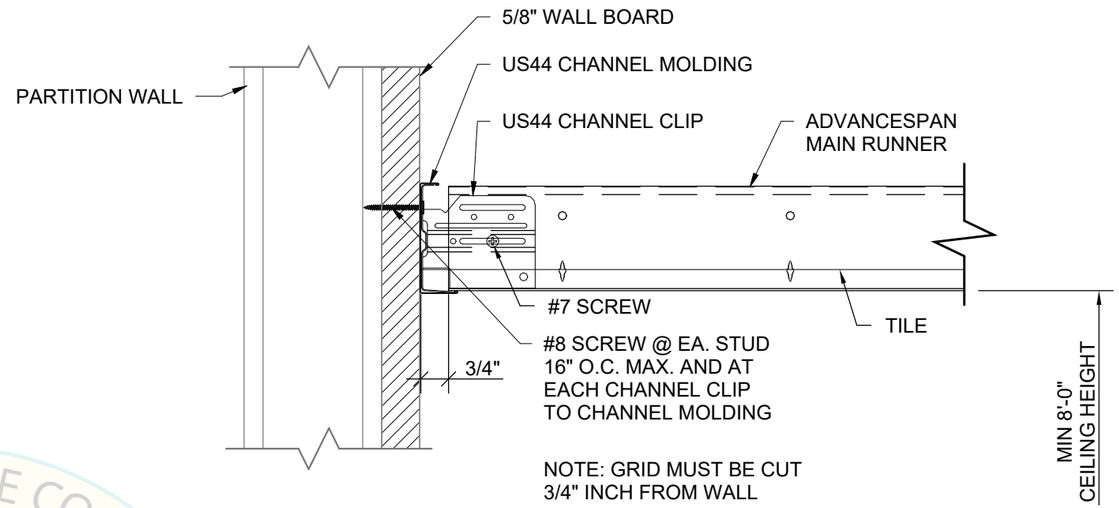

NOTES:
1. ADVANCESPAN CHANNEL ASSEMBLY AND RUNNERS PER TABLE 1 OF SHEET S2
2. GRID MUST BE CUT 3/4" INCH FROM WALL

3 FREE SIDE - MAIN RUNNER (ADVANCESPAN ONLY)

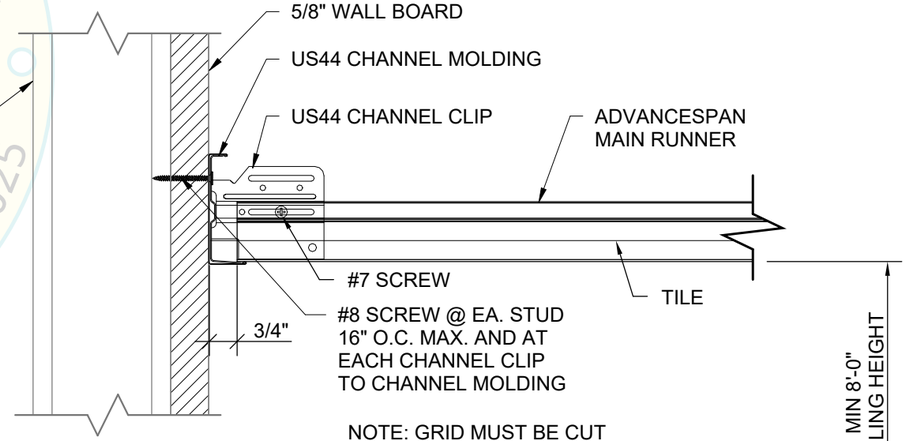

NOTES:
1. ADVANCESPAN CHANNEL ASSEMBLY AND RUNNERS PER TABLE 1 OF SHEET S2
2. GRID MUST BE CUT 3/4" FROM WALL

4 FREE SIDE - CROSS RUNNER (ADVANCESPAN ONLY)

REVIEWED FOR CODE COMPLIANCE
HCAi
OPM-0544
BY: Roy Lobo
DATE: 11/01/2026
CALIFORNIA BUILDING CODE, 2025



DEGENKOLB ENGINEERS
225 Broadway, Suite 1325
San Diego, CA 92101
619.515.0299 PHONE
www.degenkolb.com

GRIDLOK® SUSPENDED CEILING BRACE SYSTEM
OPM-0544

SHEET TITLE:
ADVANCESPAN CHANNEL ASSEMBLY

Drawn:	JEB	Job number:	B8769007.01
Design:	PGM/LH	Rev:	
Check:	CC	Scale:	AS INDICATED
Date	9/10/2026		

Sheet Number S16 OF Sheets

5/9/2017 9:06:07 AM

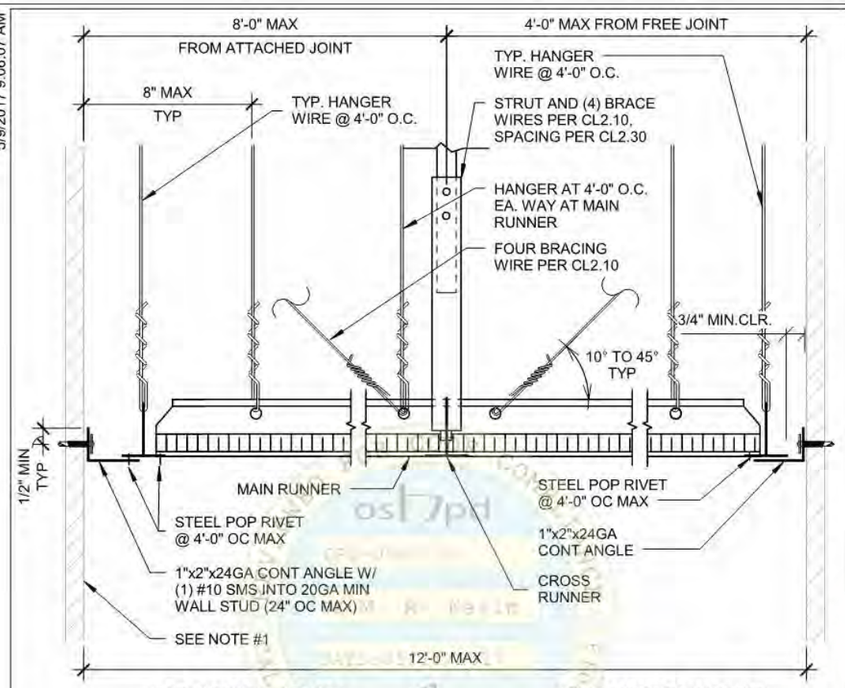

ATTACHED JOINT **EXPANSION JOINT**

ACCEPTABLE EXITWAY DETAILS

NOTES:

1. PERIMETER WALLS SHALL BE DESIGNED TO CARRY TRIBUTARY LATERAL FORCES PER TABLE BELOW. RDP TO VERIFY. RDP TO SPECIFY CONNECTION OF BACKING TO STUDS

C_{PM}	S_{DS}	Fp
2.17	$S_{DS} \leq 1.15$	9.3 plf
$2.17 < C_{PM} \leq 3.3$	$1.15 < S_{DS} \leq 1.73$	14.0 plf
$3.3 < C_{PM} \leq 4.71$	$1.73 < S_{DS} \leq 2.50$	20.9 plf

2. SEISMIC BRACING WIRES AND STRUTS IN ACCORDANCE WITH PAGES CL2.20, CL2.21, AND CL2.22 SHALL BE PERMITTED IN LIEU OF DESIGNING PERIMETER WALLS FOR SEISMIC FORCES AND BRACING SYSTEM SHOWN ON PAGE CL2.30 AND THIS PAGE.

3. STEEL POP RIVET SHALL HAVE MINIMUM ALLOWABLE SHEAR STRENGTH OF 120# AND ULTIMATE SHEAR STRENGTH OF 300#.

Section Title : OSHPD STANDARD SUSPENDED CEILING DETAILS		OPD No:
Sheet Title : TYPICAL CEILING SECTION AT EXITWAY CORRIDORS		CL2.50

1 TYPICAL CEILING SECTION AT EXITWAY CORRIDORS

5/9/2017 9:06:07 AM

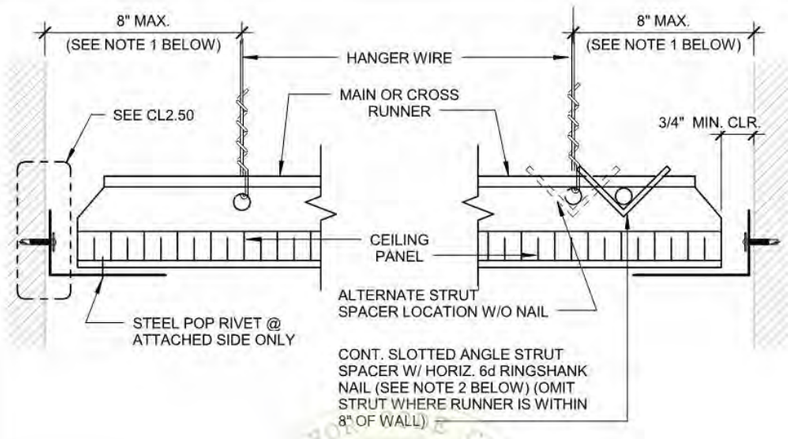

ATTACHED JOINT **FREE JOINT**

1. PROVIDE #12 GAGE HANGER WIRES AT THE ENDS OF ALL MAIN AND CROSS RUNNERS WITHIN EIGHT (8) INCHES OF THE SUPPORT OR WITHIN ONE-FOURTH (1/4) OF THE LENGTH OF THE END TEE, WHICHEVER IS LESS, FOR THE PERIMETER OF THE CEILING AREA. PERIMETER WIRES ARE NOT REQUIRED WHEN THE LENGTH OF THE END TEE IS EIGHT (8) INCHES OR LESS.
2. NAILS AT ENDS OF HORIZONTAL STRUTS ARE TO BE PLACED WITH NAIL HEAD TOWARD CENTER LINE OF SPAN OF STRUT.
3. SPACERS MAY BE SLOTTED APPROVED ANGLES OR CHANNELS WITH "DIAMOND POINTS" OF SPRING STEEL WHICH SNAP TIGHT TO PREVENT MOVEMENT OF STRUT.
4. STEEL POP RIVETS SHALL HAVE MINIMUM ALLOWABLE SHEAR STRENGTH OF 120# AND ULTIMATE SHEAR STRENGTH OF 300#.

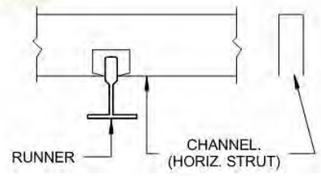

APPROVED SPACER

Section Title : OSHPD STANDARD SUSPENDED CEILING DETAILS		OPD No:
Sheet Title : CEILING PERIMETER INCLUDING NON-EXITWAY CORRIDORS		CL2.60

2 CEILING PERIMETER INCLUDING NON-EXITWAY CORRIDORS

SHEET NOTES:

1. NOTES AND DETAIL CALLOUTS IN SPECIFIC DETAILS TAKE PRECEDENCE OVER THE "OPD" DETAILS CALLED OUT ON THIS SHEET.
2. FOR THE SCOPE OF THIS OPM, 45-DEGREE BRACING WIRES HAVE BEEN REPLACED BY THE GRIDLOK BRACING SYSTEM AND ARE NOT APPLICABLE FOR USE UNDER THIS OPM. STUD BRACING TO BE INSTALLED AT 45 DEGREES OR 45-DEGREE FLANGES OF FLY PLATE PIECE ALLOWED TO BE BENT A MAXIMUM OF 15 DEGREES IN ANY DIRECTION (30° TO 60°) TO CORRECT ANGLE. SEE NOTE I.4 OF SHEET S1.
3. $C_{PM} = F_P/W$



DEGENKOLB ENGINEERS
225 Broadway, Suite 1325
San Diego, CA 92101
619.515.0299 PHONE
www.degenkolb.com

GRIDLOK® SUSPENDED CEILING BRACE SYSTEM
OPM-0544

SHEET TITLE:
OPD-0002-13 DETAILS (CL2.50, CL2.60) FOR ACOUSTICAL TILE & LAY-IN PANEL CEILINGS AND GYPBOARD CEILINGS

Drawn:	JEB	Job number:	B8769007.01
Design:	PGM/LH	Rev:	
Check:	CC	Scale:	NTS
Date	9/10/2026		

Sheet Number S17 OF Sheets

5/9/2017 9:07:19 AM

7. DESIGN CRITERIA

   a. BUILDING CODE: 2013 CALIFORNIA BUILDING CODE (2013 CBC), ASCE 7-10, AISI S100-07/S2-10, AND ASTM C754-11. FOR LOAD COMBINATIONS, ALLOWABLE STRESS DESIGN SHALL BE IN ACCORDANCE WITH 2013 CBC SECTION 1605A.3.1.

   b. FASTENER CAPACITIES TABLES WERE DEVELOPED BASED ON ICC REPORTS BY SEVERAL MANUFACTURERS.

   c. THE DESIGN ASSUMES THAT BUILDING ELEMENTS AND SUPPORTS, TO WHICH THE COMPONENTS ADDRESSED IN THIS DOCUMENT ARE ANCHORED, HAVE SUFFICIENT CAPACITY TO CARRY THE LOADS IMPOSED BY THE COMPONENTS IN COMBINATION WITH ALL OTHER LOADS. EVALUATION OF THE CAPACITY OF THESE SUPPORTING BUILDING ELEMENTS IS BEYOND THE SCOPE OF THE OPD.

   d. THIS OPD IS LIMITED TO CEILING ASSEMBLIES HAVING MAXIMUM DEAD WEIGHT OF 4 PSF, INCLUDING LIGHTING FIXTURES (LUMINERIES) AND MECHANICAL SERVICES, EACH WEIGHING LESS THAN 56 LBS AND ATTACHED TO CEILING FRAMING SYSTEM. HEAVIER SYSTEM AND THOSE SUPPORTING LATERAL FORCES FROM PARTITION WALLS ARE OUTSIDE THE SCOPE OF THIS OPD AND WILL REQUIRE PROJECT SPECIFIC DESIGN.

8. THE RDP IN RESPONSIBLE CHARGE SHALL VERIFY THE FIRE RESISTENCE AND ACOUSTICAL RATINGS FOR ALL CEILING ASSEMBLIES.

9. "CEILING WIRE" SHALL CONFORM WITH GALVANIZED SOFT ANNEALED MILD STEEL WIRE AS DEFINED IN ASTM A641 (CLASS 1 COATING) WITH 70 KSI MINIMUM TENSILE STRENGTH:

   a. FOUR (4) TWISTS OF WIRE WITHIN 1.5" DEVELOPS THE ALLOWABLE LOAD FOR THE WIRE.

   b. THREE (3) TWISTS WITHIN 3" MAY BE USED TO DEVELOP THE MAXIMUM 50% OF ALLOWABLE LOAD.

10. SUSPENSION SYSTEM COMPONENTS SHALL COMPLY WITH ASTM C754:

   a. MAIN RUNNNERS SHALL CONSIST OF 16 GAGE 1-1/2" COLD ROLLED U-CHANNEL 150U050-54 SPACED AT 4'-0" OC MAX. MAIN RUNNERS SHALL BE SUPPORTED BY HANGER WIRES AT 4'-0" OC MAX AND WITHIN 6" FROM EA END.

   b. FURRING CHANNEL SHALL CONSIST OF 25 GAGE 7/8" (HAT) FURRING CHANNELS (087F125-18) at 2'-0" OC MAX. FURRING CHANNELS SHALL BE SADDLE TIED TO MAIN RUNNERS WITH 16 GAGE TIE WIRE OR A DOUBLE STRAND OF 18 GAGE TIE WIRE.

   c. MAIN RUNNERS SHALL BE SPLICED BY LAPPING IN ACCORDANCE WITH CG2.31.

   d. FURRING CHANNELS SHALL BE SPLICED BY LAPPING IN ACCORDANCE WITH CG2.31.

   e. MAIN RUNNERS AND FURRING CHANNELS ALONG WITH THEIR SPLICES, INTERSECTION CONNECTORS, AND EXPANSION DEVICES SHALL BE DESIGNED AND CONSTRUCTED TO CARRY A MEAN ULTIMATE TEST LOAD OF NOT LESS THAN 270 LBS. IN COMPRESSION & TENSION.

   f. HANGER AND BRACING WIRES SHALL BE #12 GAGE (0.106" DIAMETER), SOFT ANNEALED, AND GALVANIZED STEEL WIRES WITH CLASS 1 COATING. THEY MAY BE USED FOR UP TO AND INCLUDING 4'-0"x 4'-0" GRID SPACING ALONG AND ATTACHED TO MAIN RUNNERS. SPLICES ARE NOT PERMITTED IN ANY HANGER WIRE.

   g. WIRE HANGERS SHALL BE SADDLE-TIED AROUND MAIN RUNNERS SO AS TO PREVENT TURNING OR TWISING OF THE MEMBER.

11. SUSPENSION SYSTEM INSTALLATION SHALL COMPLY WITH ASTM C754:

   a. CEILING GRID MEMBERS SHALL BE ATTACHED TO TWO (2) ADJACENT WALLS. MAIN RUNNERS AND FURRING CHANNEL SHALL BE AT LEAST 1 INCH CLEAR OF OTHER WALL. IF WALLS RUN DIAGONAL TO THE CEILING GRID SYSTEM RUNNERS, ONE END OF MAIN RUNNER AND FURRING SHOULD BE FREE WITH STANDARD CLEARANCES.

   b. THE WIDTH OF THE PERIMETER SUPPORTING CLOSURE ANGLE SHALL BE NOT LESS THAN TWO (2) INCHES. USE OF ANGLES WITH SMALLER WIDTHS IN CONJUNCTION WITH PERIMETER CLIPS SHALL REQUIRE AN ALTERNATE METHOD OF COMPLIANCE WITH ADEQUATE JUSTIFICATION AND ARE OUTSIDE THE SCOPE OF THIS OPD.

Section Title : OSHPD STANDARD GYPSUM BOARD CEILING DETAILS			OPD No.
Sheet Title : GYP-BOARD SUSPENDED CEILING PAGE 2 OF 5			CG0.01

1 GENERAL NOTES - PAGE 2 OF 5

5/9/2017 9:07:20 AM

12. EXPANSION JOINTS, SEISMIC SEPARATIONS, AND PENETRATIONS:

   a. EXPANSION JOINTS SHALL BE PROVIDED IN THE CEILING AT INTERSECTIONS OF CORRIDORS AND AT JUNCTIONS OF CORRIDORS WITH LOBBIES OR OTHER SIMILAR AREAS.

   b. FOR CEILING AREAS EXCEEDING 2500 SQUARE FEET, A SEISMIC SEPARATION JOINT SHALL BE PROVIDED TO DIVIDE THE CEILING INTO AREAS NOT EXCEEDING 2500 SQ. FT.

   c. PENETRATIONS THROUGH THE CEILING FOR SPRINKLER HEADS AND OTHER SIMILAR DEVICES THAT ARE NOT INTEGRALLY TIED TO THE CEILING SYSTEM IN THE LATERAL DIRECTION SHALL HAVE A TWO (2) INCH OVERSIZED RING, SLEEVE OR ADAPTER THROUGH THE CEILING TILE TO ALLOW FREE MOVEMENT OF ONE (1) INCH IN ALL HORIZONTAL DIRECTIONS. A FLEXIBLE SPRINKLER HOSE FITTING THAT CAN ACCOMMODATE ONE (1) INCH OF CEILING MOVEMENT SHALL BE PERMITTED TO BE USED IN LIEU OF THE OVERSIZED RING, SLEEVE OR ADAPTER. SUCH FLEXIBLE SPRINKLER HOSE SHALL BE ADEQUATELY SUPPORTED FROM SOFFIT SO AS NOT TO EXCEED THE MAXIMUM TRIBUTARY WEIGHT OF THE CEILING.

13. LATERAL FORCE BRACING:

   LATERAL FORCE BRACING IS REQUIRED IN ACCORDANCE WITH THIS SECTION FOR ALL CEILING AREAS, UON.

   EXCEPTION: LATERAL FORCE BRACING MAY BE OMITTED FOR SUSPENDED ACOUSTICAL CEILING SYSTEMS WITH A CEILING AREA OF 144 SQ. FT. OR LESS, WHEN PERIMETER SUPPORT ARE PROVIDED AND PERIMETER WALLS ARE DESIGNED TO CARRY THE CEILING LATERAL FORCES.

   a. PROVIDE LATERAL-FORCE BRACING ASSEMBLIES CONSISTING OF A STRUT AND FOUR (4) #12 GAGE BRACING WIRES ORIENTED 90 DEGREES FROM EACH OTHER.

   b. LATERAL-FORCE BRACING ASSEMBLIES SHALL BE SPACED IN ACCORDANCE WITH CG2.20 THROUGH CG2.22 AND CG2.30 FROM EACH WALL AND AT THE EDGES OF ANY CHANGE OF ELEVATION OF THE CEILING.

   c. THE SLOPE OF BRACING WIRES MAY BE FROM 10 TO 45 DEGREES BUT MAY NOT EXCEED 45 DEGREES FROM THE PLANE OF THE CEILING AND WIRES SHALL BE TAUT.

   d. STRUTS SHALL BE ADEQUATE TO RESIST THE VERTICAL COMPONENT INDUCED BY THE BRACING WIRES, AND SHALL NOT BE MORE THAN 1 (HORIZONTAL) IN 6 (VERTICAL) OUT OF PLUMB.

14. ATTACHMENT OF HANGER AND BRACING WIRES:

   a. FASTEN #12 HANGER WIRES WITH NOT LESS THAN THREE (3) TIGHT TURNS IN 3 INCHES. HANGER WIRE LOOPS SHALL BE TIGHTLY WRAPPED AND SHARPLY BENT TO PREVENT ANY VERTICAL MOVEMENT OR ROTATION OF THE MEMBER WITHIN THE LOOPS.

   b. FASTEN #12 BRACING WIRES WITH FOUR (4) TIGHT TURNS. MAKE ALL TIGHT TURNS WITHIN A DISTANCE OF 1 1/2" INCHES.

   c. HANGER OR BRACING WIRE ANCHORED TO THE STRUCTURE SHOULD BE INSTALLED IN SUCH A MANNER THAT THE DIRECTION OF THE ANCHOR ALIGNS AS CLOSELY AS POSSIBLE WITH THE DIRECTION OF THE WIRE.

   d. SEPARATE ALL CEILING HANGER AND BRACING WIRES AT LEAST SIX (6) INCHES FROM ALL UNBRACED DUCTS, PIPES CONDUITS, ETC.

   e. HANGER WIRES SHALL NOT BE ATTACHED TO OR BEND AROUND INTERFERING MATERIAL OR EQUIPMENT. PROVIDE TRAPEZE OR OTHER SUPPLEMETARY SUPPORT MEMBERS AT OBSTRUCTIONS TO TYPICAL HANGER SPACING. PROVIDE ADDITIONAL HANGERS, STRUTS OR BRACES AS REQUIRED AT ALL CEILING BREAKS, SOFFITS, OR DISCONTINUOUS AREAS.

   f. HANGER WIRES THAT ARE MORE THAN 1 (HORIZONTAL) IN 6 (VERTICAL) OUT OF PLUMB SHALL REQUIRE PROJECT SPECIFIC DESIGN.

   g. TESTING REQUIREMENTS:
   HANGER WIRE ANCHORS: WHEN POST-INSTALLED ANCHORS OR PAF ARE USED AS HANGER WIRE ANCHORS IN REINFORCED CONCRETE, 10% OF ANCHORS SHALL BE TENSION TESTED FOR 200 LBS.
   BRACING WIRE ANCHORS: PAF USED AS BRACING WIRE ANCHORS TO CONCRETE ARE NOT PERMITTED. WHEN POST-INSTALLED ANCHORS ARE USED AS BRACING WIRE ANCHORS IN REINFORCED CONCRETE, 50% OF ANCHORS SHALL BE TENSION TESTED FOR 440 LBS. ALTERNATELY, WIRE/ANCHOR ASSEMBLIES MAY BE TENSION TESTED IN THE DIRECTION OF THE WIRE FOR 440 LBS.
   EXCEPTION: TORQUE CONTROLLED POST-INSTALLED ANCHORS MAY BE TORQUE TESTED TO MANUFACTURER'S SPECIFICATIONS OR AS SHOWN ON THE APPROVED CONSTRUCTION DOCUMENTS.

Section Title : OSHPD STANDARD GYPSUM BOARD CEILING DETAILS			OPD No.
Sheet Title : GYP-BOARD SUSPENDED CEILING PAGE 3 OF 5			CG0.02 Rev: 03/30/2022

2 GENERAL NOTES PAGE 3 OF 5

SHEET NOTES:

1. NOTES AND DETAIL CALLOUTS IN SPECIFIC DETAILS TAKE PRECEDENCE OVER THE "OPD" DETAILS CALLED OUT ON THIS SHEET.
2. FOR THE SCOPE OF THIS OPM, 45-DEGREE BRACING WIRES HAVE BEEN REPLACED BY THE GRIDLOK BRACING SYSTEM AND ARE NOT APPLICABLE FOR USE UNDER THIS OPM. STUD BRACING TO BE INSTALLED AT 45 DEGREES OR 45-DEGREE FLANGES OF FLY PLATE PIECE ALLOWED TO BE BENT A MAXIMUM OF 15 DEGREES IN ANY DIRECTION (30° TO 60°) TO CORRECT ANGLE. SEE NOTE I.4 OF SHEET S1.
3. DETAILS APPLY TO ONLY GYPBOARD CEILINGS WITH C AND FURRING CHANNEL FRAMING.

REGISTERED PROFESSIONAL ENGINEER
CHAD RAYMOND CLOSS
No. S 5946
Exp. Date
9/10/2026
STRUCTURAL
STATE OF CALIFORNIA

DEGENKOLB ENGINEERS
225 Broadway, Suite 1325
San Diego, CA 92101
619.515.0299 PHONE
www.degenkolb.com

GRIDLOK® SUSPENDED CEILING BRACE SYSTEM
OPM-0544

SHEET TITLE:
OPD-0003-13 DETAILS (CG0.01, CG0.02) FOR GYPBOARD CEILINGS WITH C AND FURRING CHANNEL FRAMING

Drawn:	JEB	Job number:	B8769007.01
Design:	PGM/LH	Rev:	
Check:	CC	Scale:	
Date	9/10/2026		

Sheet Number S17A
OF Sheets

5/9/2017 9:07:20 AM

15. CEILING FIXTURES, TERMINALS, AND DEVICES:

a. ALL LIGHT FIXTURES, AIR TERMINALS/GRILLS, OR OTHER DEVICES (REFERRED TO ALL BY COMMON TERM FIXTURES HEREAFTER) SHALL BE MOUNTED IN A MANNER THAT WILL NOT COMPROMISE CEILING PERFORMANCE.

b. ALL FIXTURES SHALL BE SUPPORTED DIRECTLY BY MAIN RUNNERS OR BY SUPPLEMENTAL FRAMING WHICH IS SUPPORTED BY MAIN RUNNERS AND POSITIVELY ATTACHED WITH SCREWS OR OTHER APPROVED CONNECTORS.

c. SURFACE MOUNTED FIXTURES SHALL BE ATTACHED TO A MAIN RUNNER WITH A POSITIVE CLAMPING DEVICE MADE OF MATERIAL WITH A MINIMUM OF 14 GAGE. ROTATIONAL SPRING CLAMPS DO NOT COMPLY.

d. ACCESS PANELS: ACCESS TO THE SPACE BETWEEN THE CEILING AND THE FLOOR OR ROOF ABOVE SHALL NOT BE ALLOWED. SMALL ACCESS PANELS FOR THE INSPECTION, ADJUSTMENT, OR REPAIR OF UTILITY SWITCHES, VALVES, SENSORS, ETC. MAY BE ALLOWED IF THE PANEL IS LESS THAN 300 SQUARE INCHES. SUCH PANELS SHALL ALSO HAVE A PERMANENT WARNING LABEL AS FOLLOWS:

WARNING: 1. DO NOT CLIMB, WALK, OR CRAWL ON THE GYPSUM BOARD CEILING.
2. DO NOT STORE OR STOW ANYTHING ON THE GYPSUM BOARD CEILING.

e. ALL LIGHT FIXTURES WEIGHING LESS THAN OR EQUAL TO 10 LB. SHALL HAVE ONE NO. 12 GAUGE SAFETY WIRE CONNECTED FROM FIXURE HOUSING TO STRUCTURE ABOVE. IT IS NOT NECESSARY FOR THESE SAFETY WIRES TO BE TAUT.

f. ALL FIXTURES WEIGHING GREATER THAN 10 LB BUT LESS THAN OR EQUAL TO 56 LB. SHALL HAVE TWO NO. 12 GAUGE SAFETY WIRE CONNECTED FROM FIXURE HOUSING TO STRUCTURE ABOVE. IT IS NOT NECESSARY FOR THESE SAFETY WIRES TO BE TAUT.

g. ALL FIXTURES WEIGHING GREATER THAN 56 LB. SHALL BE SUPPORTED DIRECTLY FROM STRUCTURE ABOVE BY APPROVED HANGERS.

h. PENDENT-HUNG FIXTURES SHALL BE SUPPORTED DIRECTLY FROM THE STRUCTURE ABOVE USING NO LESS THAN N0. 9-GAUGE WIRE OR AN APPROVED ALTERNATE SUPPORT. THE CEILING SUSPENSION SYSTEM SHALL NOT PROVIDE ANY DIRECT SUPPORT.

i. ALL RECESSED OR DROP-IN FIXTURES SHALL BE SUPPORTED DIRECTLY FROM FIXTURE HOUSING TO THE STRUCTURE ABOVE WITH A MINIMUM OF TWO NO. 12 GAUGE WIRES LOCATED AT DIAGONALLY OPPOSITE CORNERS. LEVELLING OR POSITIONING OF FIXURES MAY BE PROVIDED BY CEILING GRID. FIXTURE SUPPORT WIRES MAY BE SLIGHTLY LOOSE TO ALLOW THE FIXTURE TO SEAT IN THE GRID SYSTEM. FIXTURES SHALL NOT BE SUPPORTED FROM MAIN RUNNERS OR FURRING CHANNELS IF THE WEIGHT OF THE FIXTURES CAUSES TOTAL DEAD LOAD TO EXCEED THE DEFLECTION CAPABILITY OF THE CEILING SUSPENSION SYSTEM.

16. CEILINGS THAT ARE PART OF A FIRE RATED ASSEMBLY: PROVIDE A DETAIL AND DESIGN NUMBER FOR RATED CEILING ASSEMBLIES FROM AN APPROVED TESTING AGENCY. THE COMPONENTS AND INSTALLATION DETAILS SHALL CONFORM IN EVERY RESPECT WITH THE LISTED DETAIL AND NUMBER. DETAILS SHALL CLEARLY DEPICT ALL COMPONENTS, INCLUDING INSULATION MATERIALS, FRAMING AND ATTACHMENT OF THE DESIGN SO THAT THE ASSEMBLY CAN BE CONSTRUCTED AND INSPECTED ACCORDINGLY. POP RIVETS, SCREWS, OR OTHER ATTACHMENTS ARE NOT ACCEPTABLE UNLESS SPECIFICALLY DETAILED ON THE DRAWINGS AND APPROVED BY OSHPD.

Section Title : OSHPD STANDARD GYPSUM BOARD CEILING DETAILS		OPD No:
Sheet Title : GYP-BOARD SUSPENDED CEILING PAGE 4 OF 5		CG0.03

1 GENERAL NOTES - PAGE 4 OF 5

5/9/2017 9:07:20 AM

17. GYPSUM BOARD INSTALLATION SHALL COMPLY WITH ASTM C840-11:

a. GYPSUM BOARD SHALL CONSIST OF SINGLE-PLY ½" OR 5/8" THICK IN ACCORDANCE WITH ASTM C11-10a.

b. GYPSUM BOARD SHALL BE INSTALLED PERPENDICULAR TO FURRING WITH SCREWS AT 12" ON CENTER MAXIMUM, IN ACCORDANCE WITH ASTM C840-11.

c. GYPSUM BOARD SHALL BE ATTACHED TO FURRING/FRAMING WITH ASTM C1002-07 TYPE S (ASTM A568-11b GRADES 1018 TO 1022) SCREWS (NOT LESS THAN, N0. 6, WITH MAJOR DIAMETER NOT LESS THAN 0.136 IN).

REVIEWED FOR CODE COMPLIANCE
oshpd
OPD-0003-13
BY: M. R. Karim
DATE: 05/11/2017
CALIFORNIA BUILDING CODE 2022

Section Title : OSHPD STANDARD GYPSUM BOARD CEILING DETAILS		OPD No:
Sheet Title : GYP-BOARD SUSPENDED CEILING PAGE 5 OF 5		CG0.04

2 GENERAL NOTES - PAGE 5 OF 5

SHEET NOTES:

1. NOTES AND DETAIL CALLOUTS IN SPECIFIC DETAILS TAKE PRECEDENCE OVER THE "OPD" DETAILS CALLED OUT ON THIS SHEET.

2. FOR THE SCOPE OF THIS OPM, 45-DEGREE BRACING WIRES HAVE BEEN REPLACED BY THE GRIDLOK BRACING SYSTEM AND ARE NOT APPLICABLE FOR USE UNDER THIS OPM. STUD BRACING TO BE INSTALLED AT 45 DEGREES OR 45-DEGREE FLANGES OF FLY PLATE PIECE ALLOWED TO BE BENT A MAXIMUM OF 15 DEGREES IN ANY DIRECTION (30° TO 60°) TO CORRECT ANGLE. SEE NOTE I.4 OF SHEET S1.

3. DETAILS APPLY TO ONLY GYPBOARD CEILINGS WITH C AND FURRING CHANNEL FRAMING.

REGISTERED PROFESSIONAL ENGINEER
CHAD RAYMOND CLOSS
No. S 5946
Exp. Date
6/30/2026
STATE OF CALIFORNIA

DEGENKOLB ENGINEERS
225 Broadway, Suite 1325
San Diego, CA 92101
619.515.0299 PHONE
www.degenkolb.com

GRIDLOK® SUSPENDED CEILING BRACE SYSTEM
OPM-0544

SHEET TITLE:
OPD-0003-13 DETAILS (CG0.03, CG0.04) FOR GYPBOARD CEILINGS WITH C AND FURRING CHANNEL FRAMING

Drawn:	JEB	Job number:	B8769007.01
Design:	PGM/LH	Rev:	
Check:	CC	Scale:	
Date	9/10/2026		

Sheet Number S17B

OF Sheets

5/9/2017 9:07:21 AM

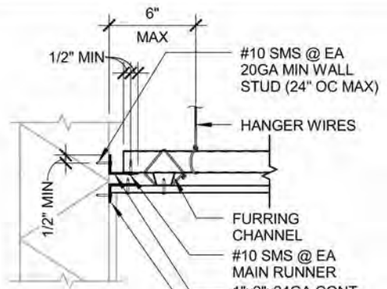

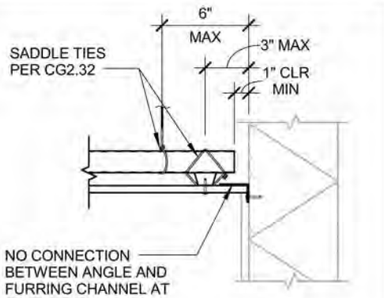

NOTE: FOR CONN. TO WALL, SEE ATTACHED JOINT.

ATTACHED JOINT

FREE JOINT

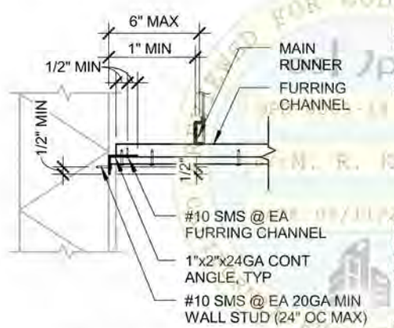

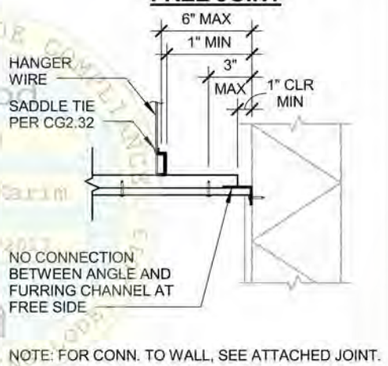

NOTE: FOR CONN. TO WALL, SEE ATTACHED JOINT.

ATTACHED JOINT

FREE JOINT

NOTES:

1. PERIMETER WALLS SHALL BE DESIGNED TO CARRY TRIBUTARY LATERAL FORCES PER TABLE BELOW. RDP TO VERIFY. RDP TO SPECIFY CONNECTION OF BACKING TO STUDS
2. WHEN GYPSUM BOARD IS TO BE APPLIED TO BOTH CEILING AND WALLS, GYPSUM BOARD SHALL BE APPLIED FIRST TO THE CEILING AND THEN TO WALLS IN ACCORDANCE WITH ASTM C840.

S_{DS} (g)	Fp	C_{PM}
$S_{DS} \leq 1.15$	9.3 plf	2.17
$1.15 < S_{DS} \leq 1.73$	14.0 plf	$2.17 < C_{PM} \leq 3.3$
$1.73 < S_{DS} \leq 2.50$	20.9 plf	$3.3 < C_{PM} \leq 4.71$

Section Title : OSHPD STANDARD GYPSUM BOARD CEILING DETAILS		OPD No:
Sheet Title : CEILING PERIMETER		CG2.30

1 CEILING PERIMETER

5/9/2017 9:07:21 AM

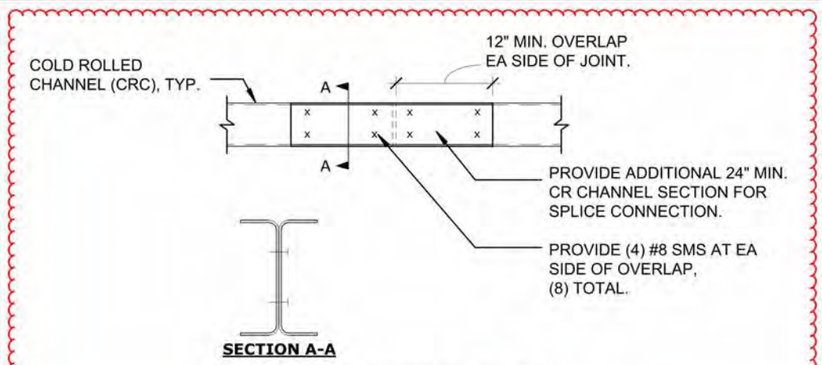

MAIN RUNNER SPLICE

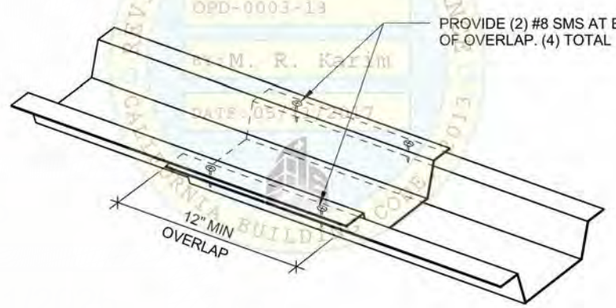

FURRING CHANNEL SPLICE

Section Title : OSHPD STANDARD GYPSUM BOARD CEILING DETAILS		OPD No:
Sheet Title : SPLICE DETAILS		CG2.31 Rev: 10/31/2023

2 SPLICE DETAILS

SHEET NOTES:

1. NOTES AND DETAIL CALLOUTS IN SPECIFIC DETAILS TAKE PRECEDENCE OVER THE "OPD" DETAILS CALLED OUT ON THIS SHEET.
2. FOR THE SCOPE OF THIS OPM, 45-DEGREE BRACING WIRES HAVE BEEN REPLACED BY THE GRIDLOK BRACING SYSTEM AND ARE NOT APPLICABLE FOR USE UNDER THIS OPM. STUD BRACING TO BE INSTALLED AT 45 DEGREES OR 45-DEGREE FLANGES OF FLY PLATE PIECE ALLOWED TO BE BENT A MAXIMUM OF 15 DEGREES IN ANY DIRECTION (30° TO 60°) TO CORRECT ANGLE. SEE NOTE I.4 OF SHEET S1.
3. DETAILS APPLY TO ONLY GYPBOARD CEILINGS WITH C AND FURRING CHANNEL FRAMING.
4. $C_{PM} = F_P/W$

REGISTERED PROFESSIONAL ENGINEER
CHAD RAYMOND CLOSS
No. S 5946
Exp. Date
9/10/2026
STATE OF CALIFORNIA

DEGENKOLB ENGINEERS
225 Broadway, Suite 1325
San Diego, CA 92101
619.515.0299 PHONE
www.degenkolb.com

GRIDLOK® SUSPENDED CEILING BRACE SYSTEM
OPM-0544

SHEET TITLE:
OPD-0003-13 DETAILS (CG2.30, CG2.31) FOR GYPBOARD CEILINGS WITH C AND FURRING CHANNEL FRAMING

Drawn:	JEB	Job number:	B8769007.01
Design:	PGM/LH	Rev:	
Check:	CC	Scale:	
Date	9/10/2026		

Sheet Number S17C
OF Sheets

5/9/2017 9:07:21 AM

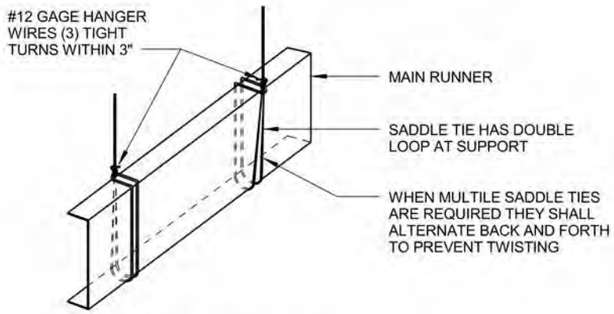

SADDLE TIE AT MAIN RUNNER TO HANGER WIRE

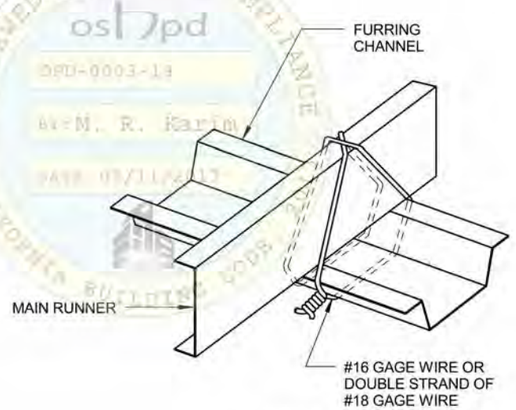

SADDLE TIE AT FURRING CHANNEL TO MAIN RUNNER

NOTE:
REFERENCE ASTM C754 FIGURES 5 & 13

Section Title : OSHPD STANDARD GYPSUM BOARD CEILING DETAILS			OPD No:
Sheet Title : SADDLE TIE DETAILS			CG2.32

REVIEWED FOR CODE COMPLIANCE
oshpd
OPD-0003-13
BY: M. R. Karim
DATE: 05/11/2017
CALIFORNIA BUILDING CODE

REVIEWED FOR CODE COMPLIANCE
HCAi
OPM-0544
BY: Roy Lobo
DATE: 11/01/2026
CALIFORNIA BUILDING CODE, 2025

1 SADDLE TIE DETAILS

SHEET NOTES:

1. NOTES AND DETAIL CALLOUTS IN SPECIFIC DETAILS TAKE PRECEDENCE OVER THE "OPD" DETAILS CALLED OUT ON THIS SHEET.
2. FOR THE SCOPE OF THIS OPM, 45-DEGREE BRACING WIRES HAVE BEEN REPLACED BY THE GRIDLOK BRACING SYSTEM AND ARE NOT APPLICABLE FOR USE UNDER THIS OPM. STUD BRACING TO BE INSTALLED AT 45 DEGREES OR 45-DEGREE FLANGES OF FLY PLATE PIECE ALLOWED TO BE BENT A MAXIMUM OF 15 DEGREES IN ANY DIRECTION (30° TO 60°) TO CORRECT ANGLE. SEE NOTE I.4 OF SHEET S1.
3. DETAILS APPLY TO ONLY GYPBOARD CEILINGS WITH C AND FURRING CHANNEL FRAMING.



DEGENKOLB ENGINEERS
225 Broadway, Suite 1325
San Diego, CA 92101
619.515.0299 PHONE
www.degenkolb.com

GRIDLOK® SUSPENDED CEILING BRACE SYSTEM
OPM-0544

SHEET TITLE:
OPD-0003-13 DETAILS (CG2.32) FOR GYPBOARD CEILINGS WITH C AND FURRING CHANNEL FRAMING

Drawn:	JEB	Job number:	B8769007.01
Design:	PGM/LH	Rev:	
Check:	CC	Scale:	
Date	9/10/2026		

Sheet Number S17D

OF Sheets

5/9/2017 9:06:03 AM

12. EXPANSION JOINTS, SEISMIC SEPARATIONS, AND PENETRATIONS:

a. EXPANSION JOINTS SHALL BE PROVIDED IN THE CEILING AT INTERSECTIONS OF CORRIDORS AND AT JUNCTIONS OF CORRIDORS WITH LOBBIES OR OTHER SIMILAR AREAS.

b. FOR CEILING AREAS EXCEEDING 2500 SQUARE FEET, A SEISMIC SEPARATION JOINT SHALL BE PROVIDED TO DIVIDE THE CEILING INTO AREAS NOT EXCEEDING 2500 SQ. FT.

c. PENETRATIONS THROUGH THE CEILING FOR SPRINKLER HEADS AND OTHER SIMILAR DEVICES THAT ARE NOT INTEGRALLY TIED TO THE CEILING SYSTEM IN THE LATERAL DIRECTION SHALL HAVE A TWO (2) INCH OVERSIZED RING, SLEEVE OR ADAPTER THROUGH THE CEILING TILE TO ALLOW FREE MOVEMENT OF ONE (1) INCH IN ALL HORIZONTAL DIRECTIONS. A FLEXIBLE SPRINKLER HOSE FITTING THAT CAN ACCOMMODATE ONE (1) INCH OF CEILING MOVEMENT SHALL BE PERMITTED TO BE USED IN LIEU OF THE OVERSIZED RING, SLEEVE OR ADAPTER. SUCH FLEXIBLE SPRINKLER HOSE SHALL BE ADEQUATELY SUPPORTED FROM SOFFIT SO AS NOT TO EXCEED THE MAXIMUM TRIBUTARY WEIGHT OF THE CEILING.

13. LATERAL FORCE BRACING:
LATERAL FORCE BRACING IS REQUIRED IN ACCORDANCE WITH THIS SECTION FOR ALL CEILING AREAS, UON.

EXCEPTION: LATERAL FORCE BRACING MAY BE OMITTED FOR SUSPENDED ACOUSTICAL CEILING SYSTEMS WITH A CEILING AREA OF 144 SQ. FT. OR LESS, WHEN PERIMETER SUPPORT IN ACCORDANCE WITH ASTM E580 ARE PROVIDED AND PERIMETER WALLS ARE DESIGNED TO CARRY THE CEILING LATERAL FORCES.

a. PROVIDE LATERAL-FORCE BRACING ASSEMBLIES CONSISTING OF A STRUT AND FOUR (4) #12 GAGE BRACING WIRES ORIENTED 90 DEGREES FROM EACH OTHER.

b. LATERAL-FORCE BRACING ASSEMBLIES SHALL BE SPACED IN ACCORDANCE WITH CL2.20 THROUGH CL2.22 AND CL2.30 FROM EACH WALL AND AT THE EDGES OF ANY CHANGE OF ELEVATION OF THE CEILING.

c. THE SLOPE OF BRACING WIRES MAY BE FROM 10 TO 45 DEGREES BUT MAY NOT EXCEED 45 DEGREES FROM THE PLANE OF THE CEILING AND WIRES SHALL BE TAUT.

d. STRUTS SHALL BE ADEQUATE TO RESIST THE VERTICAL COMPONENT INDUCED BY THE BRACING WIRES, AND SHALL NOT BE MORE THAN 1 (HORIZONTAL) IN 6 (VERTICAL) OUT OF PLUMB.

14. ATTACHMENT OF HANGER AND BRACING WIRES:

a. FASTEN #12 HANGER WIRES WITH NOT LESS THAN THREE (3) TIGHT TURNS IN 3 INCHES. HANGER WIRE LOOPS SHALL BE TIGHTLY WRAPPED AND SHARPLY BENT TO PREVENT ANY VERTICAL MOVEMENT OR ROTATION OF THE MEMBER WITHIN THE LOOPS.

b. FASTEN #12 BRACING WIRES WITH FOUR (4) TIGHT TURNS. MAKE ALL TIGHT TURNS WITHIN A DISTANCE OF 1 1/2" INCHES.

c. HANGER OR BRACING WIRE ANCHORED TO THE STRUCTURE SHOULD BE INSTALLED IN SUCH A MANNER THAT THE DIRECTION OF THE ANCHOR ALIGNS AS CLOSELY AS POSSIBLE WITH THE DIRECTION OF THE WIRE.

d. SEPARATE ALL CEILING HANGER AND BRACING WIRES AT LEAST SIX (6) INCHES FROM ALL UNBRACED DUCTS, PIPES CONDUITS, ETC.

e. HANGER WIRES SHALL NOT BE ATTACHED TO OR BEND AROUND INTERFERING MATERIAL OR EQUIPMENT. PROVIDE TRAPEZE OR OTHER SUPPLEMETARY SUPPORT MEMBERS AT OBSTRUCTIONS TO TYPICAL HANGER SPACING. PROVIDE ADDITIONAL HANGERS, STRUTS OR BRACES AS REQUIRED AT ALL CEILING BREAKS, SOFFITS, OR DISCONTINUOUS AREAS.

f. HANGER WIRES THAT ARE MORE THAN 1 (HORIZONTAL) IN 6 (VERTICAL) OUT OF PLUMB SHALL REQUIRE PROJECT SPECIFIC DESIGN.

g. WHEN DRILLED-IN CONCRETE ANCHORS OR PAF ARE USED IN REINFORCED CONCRETE FOR HANGER WIRES, 1 OUT OF 10 WIRE/ ANCHOR ASSEMBLIES SHALL BE FIELD TESTED FOR 200 LBS. IN TENSION. WHEN DRILLED-IN CONCRETE ANCHORS ARE USED FOR BRACING WIRES, 1 OUT OF 2 WIRE/ANCHOR ASSEMBLIES SHALL BE FIELD TESTED FOR 440 LBS. IN TENSION IN THE DIRECTION OF THE WIRE. PAF IN CONCRETE ARE NOT PERMITTED FOR BRACING WIRES.

Section Title : OSHPD STANDARD SUSPENDED CEILING DETAILS		OPD No:
Sheet Title : GENERAL NOTES - PAGE 3 OF 4		CL0.02

1 GENERAL NOTES - PAGE 3 OF 4

5/9/2017 9:06:08 AM

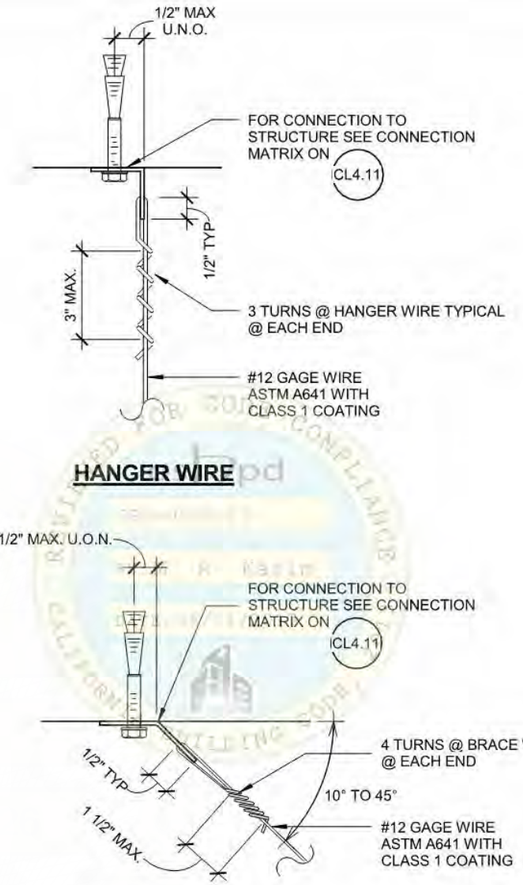

Section Title : OSHPD STANDARD SUSPENDED CEILING DETAILS		OPD No:
Sheet Title : HANGER AND BRACING WIRE CONNECTION - TYPICAL WIRE TURNS		CL4.10

2 HANGER AND BRACING WIRE CONNECTION - TYPICAL WIRE TURNS

SHEET NOTES:

1. NOTES AND DETAIL CALLOUTS IN SPECIFIC DETAILS TAKE PRECEDENCE OVER THE "OPD" DETAILS CALLED OUT ON THIS SHEET.

2. FOR THE SCOPE OF THIS OPM, 45-DEGREE BRACING WIRES HAVE BEEN REPLACED BY THE GRIDLOK BRACING SYSTEM AND ARE NOT APPLICABLE FOR USE UNDER THIS OPM. STUD BRACING TO BE INSTALLED AT 45 DEGREES OR 45-DEGREE FLANGES OF FLY PLATE PIECE ALLOWED TO BE BENT A MAXIMUM OF 15 DEGREES IN ANY DIRECTION (30° TO 60°) TO CORRECT ANGLE. SEE NOTE I.4 OF SHEET S1.

REGISTERED PROFESSIONAL ENGINEER
CHAD RAYMOND CLOSS
No. S 5946
Exp. Date
3/31/2026
STRUCTURAL
STATE OF CALIFORNIA

DEGENKOLB ENGINEERS
225 Broadway, Suite 1325
San Diego, CA 92101
619.515.0299 PHONE
www.degenkolb.com

GRIDLOK® SUSPENDED CEILING BRACE SYSTEM
OPM-0544

SHEET TITLE:
OPD-0002-13 DETAILS (CL0.02, CL4.10)

Drawn:	JEB	Job number:	B8769007.01
Design:	PGM/LH	Rev:	
Check:	CC	Scale:	NTS
Date	9/10/2026		

Sheet Number S18 OF Sheets

5/9/2017 9:06:08 AM

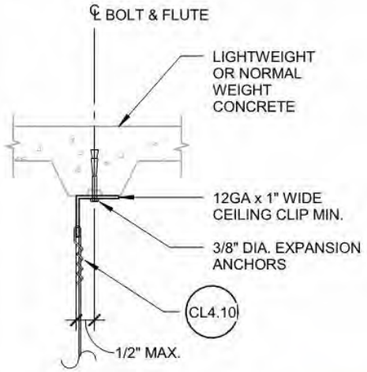

OPTION 1

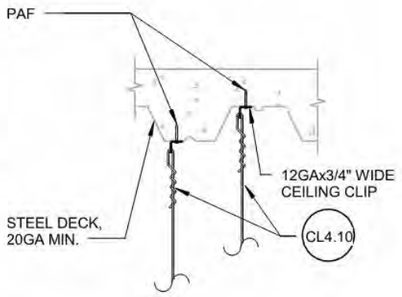

OPTION 2

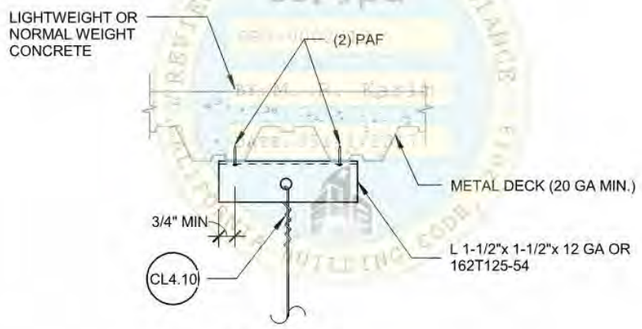

OPTION 3

NOTES:

1. LOAD TEST IN ACCORDANCE WITH GENERAL NOTE 14(g), PAGE CL0.02 SHALL BE REQUIRED
2. REFER TO CL4.10 FOR ADDITIONAL DETAILS

Section Title : OSHPD STANDARD SUSPENDED CEILING DETAILS			OPD No:
Sheet Title : HANGER WIRE CONNECTION TO CONCRETE OVER METAL DECK			CL4.21

1 HANGER WIRE CONNECTION TO CONCRETE OVER METAL DECK

5/9/2017 9:06:08 AM

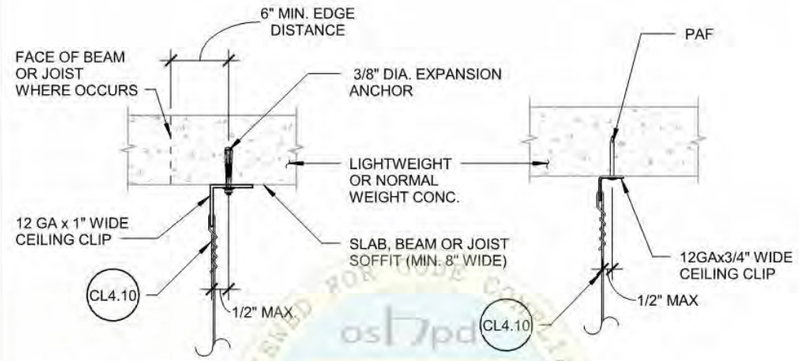

OPTION 1

OPTION 2

NOTES:

1. LOAD TEST IN ACCORDANCE WITH GENERAL NOTE 14(g), PAGE CL0.02 SHALL BE REQUIRED
2. PRIOR TO INSTALLATION, REINFORCING/PRESTRESSING BAR LOCATIONS SHALL BE DETERMINED BY NON-DESTRUCTIVE TESTING
3. REFER TO CL4.10 FOR ADDITIONAL DETAILS

Section Title : OSHPD STANDARD SUSPENDED CEILING DETAILS			OPD No:
Sheet Title : HANGER WIRE CONNECTION TO CONCRETE SLAB, BEAM, OR JOIST			CL4.22

2 HANGER WIRE CONNECTION TO CONCRETE SLAB, BEAM, OR JOIST

SHEET NOTES:

1. NOTES AND DETAIL CALLOUTS IN SPECIFIC DETAILS TAKE PRECEDENCE OVER THE "OPD" DETAILS CALLED OUT ON THIS SHEET.
2. FOR THE SCOPE OF THIS OPM, 45-DEGREE BRACING WIRES HAVE BEEN REPLACED BY THE GRIDLOK BRACING SYSTEM AND ARE NOT APPLICABLE FOR USE UNDER THIS OPM. STUD BRACING TO BE INSTALLED AT 45 DEGREES OR 45-DEGREE FLANGES OF FLY PLATE PIECE ALLOWED TO BE BENT A MAXIMUM OF 15 DEGREES IN ANY DIRECTION (30° TO 60°) TO CORRECT ANGLE. SEE NOTE I.4 OF SHEET S1.



DEGENKOLB ENGINEERS
225 Broadway, Suite 1325
San Diego, CA 92101
619.515.0299 PHONE
www.degenkolb.com

GRIDLOK® SUSPENDED CEILING BRACE SYSTEM
OPM-0544

SHEET TITLE:
OPD-0002-13 DETAILS (CL4.21, CL4.22)

Drawn:	JEB	Job number:	B8769007.01
Design:	PGM/LH	Rev:	
Check:	CC	Scale:	NTS
Date	9/10/2026		

Sheet Number S19 OF Sheets

5/9/2017 9:06:08 AM

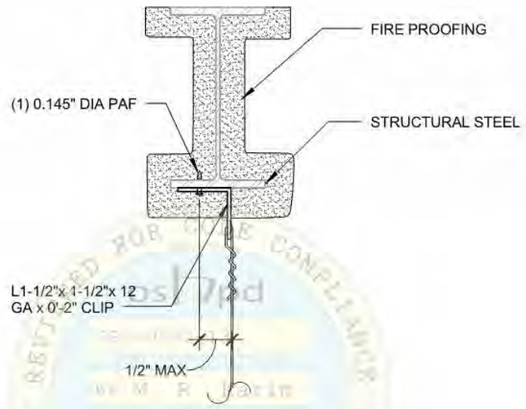

HANGER WIRE

NOTES :

1. BEAM FLANGE THICKNESS SHALL NOT BE LESS THAN 3/16" OR MORE THAN 3/8"
2. FRAMING MEMBERS SHALL BE DESIGNED TO CARRY THE CEILING LOADS, RDP TO VERIFY
3. RDP IN RESPONSIBLE CHARGE, I.O.R. AND CONTRACTOR SHALL VERIFY THAT NO PAF IS INSTALLED IN THE PROTECTED ZONE OF ANY STEEL MEMBER, SEE ANSI/AISC 341-10.

Section Title : OSHPD STANDARD SUSPENDED CEILING DETAILS			OPD No:
Sheet Title : HANGER WIRE CONNECTION TO STRUCTURAL STEEL			CL4.23

1 HANGER WIRE CONNECTION TO STRUCTURAL STEEL

5/9/2017 9:06:09 AM

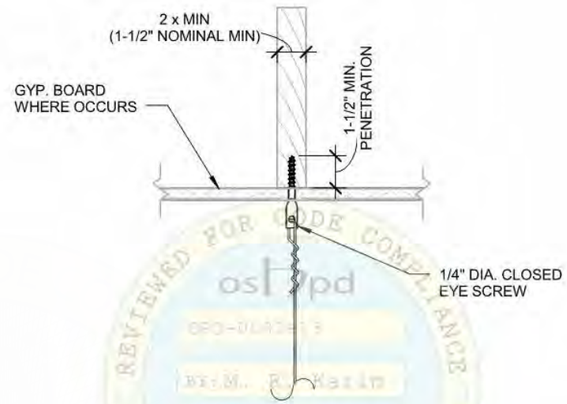

HANGER WIRE

NOTES:

1. FRAMING MEMBERS SHALL BE DESIGNED TO CARRY THE CEILING LOADS, RDP TO VERIFY
2. RDP SHALL VERIFY THAT SCREWS AT THE BOTTOM FLANGE OF TRUSS IS ACCEPTABLE

Section Title : OSHPD STANDARD SUSPENDED CEILING DETAILS			OPD No:
Sheet Title : HANGER WIRE CONNECTION TO SAWN TIMBER			CL4.24

2 HANGER WIRE CONNECTION TO SAWN TIMBER

SHEET NOTES:

1. NOTES AND DETAIL CALLOUTS IN SPECIFIC DETAILS TAKE PRECEDENCE OVER THE "OPD" DETAILS CALLED OUT ON THIS SHEET.
2. FOR THE SCOPE OF THIS OPM, 45-DEGREE BRACING WIRES HAVE BEEN REPLACED BY THE GRIDLOK BRACING SYSTEM AND ARE NOT APPLICABLE FOR USE UNDER THIS OPM. STUD BRACING TO BE INSTALLED AT 45 DEGREES OR 45-DEGREE FLANGES OF FLY PLATE PIECE ALLOWED TO BE BENT A MAXIMUM OF 15 DEGREES IN ANY DIRECTION (30° TO 60°) TO CORRECT ANGLE. SEE NOTE I.4 OF SHEET S1.

REGISTERED PROFESSIONAL ENGINEER
CHAD RAYMOND CLOSS
No. S 5946
Exp. Date
3/31/2026
STATE OF CALIFORNIA
STRUCTURAL

DEGENKOLB ENGINEERS
225 Broadway, Suite 1325
San Diego, CA 92101
619.515.0299 PHONE
www.degenkolb.com

GRIDLOK® SUSPENDED CEILING BRACE SYSTEM
OPM-0544

SHEET TITLE:
OPD-0002-13 DETAILS (CL4.23, CL4.24)

Drawn:	JEB	Job number:	B8769007.01
Design:	PGM/LH	Rev:	
Check:	CC	Scale:	NTS
Date	9/10/2026		

Sheet Number S20 OF Sheets

5/9/2017 9:06:09 AM

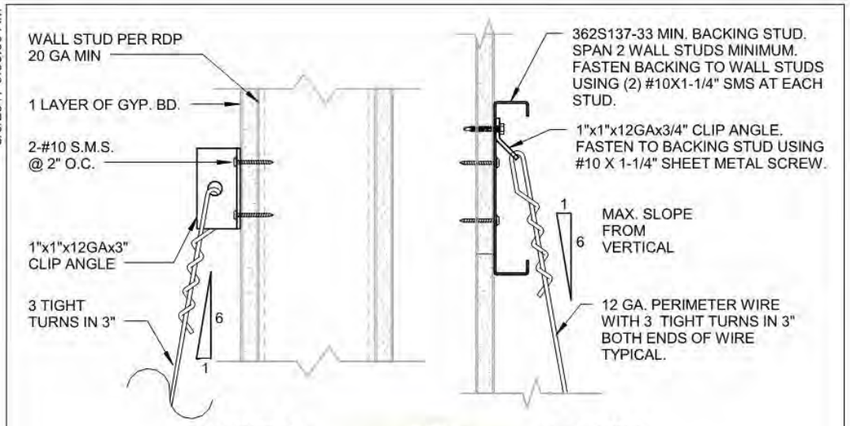

OPTION 1 **OPTION 2**

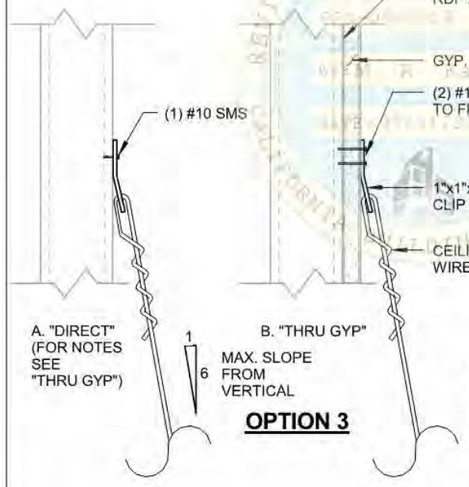

OPTION 3

NOTES:

1. THIS IS APPLIED FOR PERIMETER WIRE ATTACHEMENT OR WHERE OBSTRUCTION PREVENTS ATTACHMENT TO STRUCTURE ABOVE
2. RDP SHALL DESIGN FRAMING WALL TO CARRY THE CEILING LOAD. SEE TABLE BELOW FOR LOADS. LOADS ASSUME A TRIBUTARY AREA OF 16 SQ FT AND ARE UNFACTORED.
3. WALLS SHALL BE DESIGNED FOR HANGER FORCES BELOW. AT FREE JOINT, HANGER WIRE SHALL HAVE A MINIMUM STRETCH LENGTH (CLR LENGTH BTWN TURNS) OF12"

	HANGER FORCES	
	VERTICAL	HORIZONTAL
DEAD	64 LBS	11 LBS

SEISMIC (0.14S_{DS} Wp)			$F_P = C_{PM} W_P$
S_{DS} <= 1.15	11 LBS	2 LBS	$C_{PM} \leq 2.17$
1.15 < S_{DS} <= 1.73	16 LBS	3 LBS	$2.17 < C_{PM} \leq 3.3$
1.73 < S_{DS} <= 2.50	23 LBS	4 LBS	$3.3 < C_{PM} \leq 4.71$

Section Title : OSHPD STANDARD SUSPENDED CEILING DETAILS		OPD No:
Sheet Title : HANGER WIRE CONNECTION TO METAL STUD WALL		CL4.25

1 HANGER WIRE CONNECTION TO METAL STUD WALL

5/9/2017 9:06:07 AM

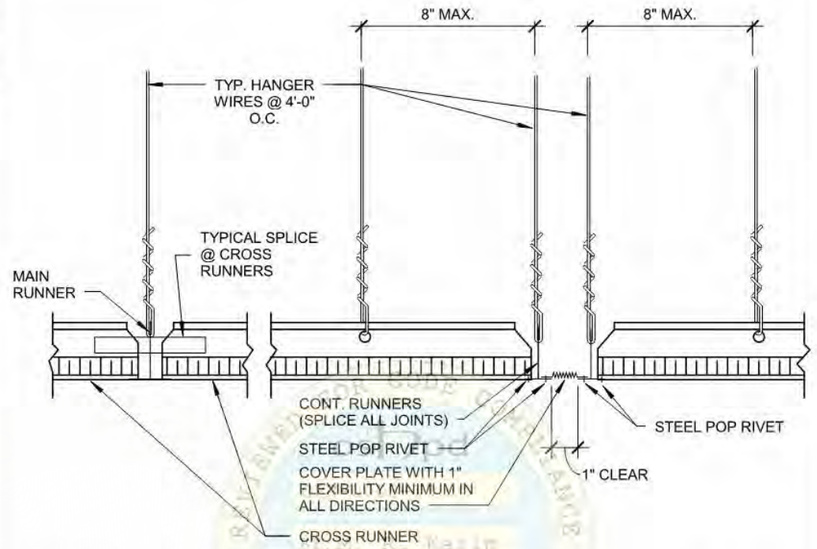

RUNNER SPLICE **EXPANSION JOINT**

EXPANSION JOINT AT INTERSECTION OF CORRIDORS, JUNCTIONS OF CORRIDORS AND LOBBIES, SIMILAR AREAS AND CEILING OVER 2500 SFT

Section Title : OSHPD STANDARD SUSPENDED CEILING DETAILS		OPD No:
Sheet Title : SUSPENDED ACOUSTICAL CEILING - EXPANSION JOINT AT INTERSECTIONS		CL2.40

2 SUSPENDED ACOUSTICAL CEILING - EXPANSION JOINT AT INTERSECTIONS

SHEET NOTES:

1. NOTES AND DETAIL CALLOUTS IN SPECIFIC DETAILS TAKE PRECEDENCE OVER THE "OPD" DETAILS CALLED OUT ON THIS SHEET.
2. FOR THE SCOPE OF THIS OPM, 45-DEGREE BRACING WIRES HAVE BEEN REPLACED BY THE GRIDLOK BRACING SYSTEM AND ARE NOT APPLICABLE FOR USE UNDER THIS OPM. STUD BRACING TO BE INSTALLED AT 45 DEGREES OR 45-DEGREE FLANGES OF FLY PLATE PIECE ALLOWED TO BE BENT A MAXIMUM OF 15 DEGREES IN ANY DIRECTION (30° TO 60°) TO CORRECT ANGLE. SEE NOTE I.4 OF SHEET S1.
3. $C_{PM} = F_P/W$

REGISTERED PROFESSIONAL ENGINEER
CHAD RAYMOND CLOSS
No. S 5946
Exp. Date
11/30/2026
STRUCTURAL
STATE OF CALIFORNIA

DEGENKOLB ENGINEERS
225 Broadway, Suite 1325
San Diego, CA 92101
619.515.0299 PHONE
www.degenkolb.com

GRIDLOK® SUSPENDED CEILING BRACE SYSTEM
OPM-0544

SHEET TITLE:
OPD-0002-13 DETAILS (CL4.25, CL2.40)

Drawn:	JEB	Job number:	B8769007.01
Design:	PGM/LH	Rev:	
Check:	CC	Scale:	NTS
Date	9/10/2026		

Sheet Number S21 OF Sheets