DEPARTMENT OF HEALTH CARE ACCESS AND INFORMATION
OFFICE OF STATEWIDE HOSPITAL PLANNING AND DEVELOPMENT

APPLICATION FOR HCAI PREAPPROVAL OF MANUFACTURER'S CERTIFICATION (OPM)

OFFICE USE ONLY

APPLICATION #: OPM-0596

HCAI Preapproval of Manufacturer's Certification (OPM)

Type: ☐ New ☒ Renewal/Update

Manufacturer Information

Manufacturer: Beckman Coulter, Inc.

Manufacturer's Technical Representative: Peter Gonzalez

Mailing Address: 250 S. Kramer Blvd., Brea, CA 92821

Telephone: (786) 521-5803 Email: peter.gonzalez@beckman.com

REVIEWED FOR CODE COMPLIANCE
HCAI
OPM-0596
BY: William Staehlin
DATE: 02/20/2026
CALIFORNIA BUILDING CODE, 2025

Product Information

Product Name: DxC 500i and DxC 500 AU Chemistry Analyzers

Product Type: Other electrical and mechanical components

Product Model Number: DxC 500i and DxC 500 AU

General Description: Chemical Analyzer for Various Fluids

Applicant Information

Applicant Company Name: EASE LLC.

Contact Person: Tiffany Tonn

Mailing Address: 1515 FAIRVIEW AVE, STE 205, MISSOULA, MT 59801

Telephone: (406) 541-3273 Email: tiffany@easeco.com

Title: Office Assistant

"A healthier California where all receive equitable, affordable, and quality health care"

STATE OF CALIFORNIA – HEALTH AND HUMAN SERVICES AGENCY

HCAi

Registered Design Professonal Preparing Engineering Recommendations

Company Name: EASE LLC

Name: Jonathan Roberson California License Number: S4197

Mailing Address: 5877 Pine Ave., Suite 210, Chino Hills, CA 91709

Telephone: (951) 295-1892 Email: jon@EASECo.com

Certification Method

Testing in accordance with: ☐ ICC-ES AC156 ☐ FM 1950 ☐ ASHRAE 171 ☐ FEMA 461

☐ Other(s) (Please Specify):

*Use of criteria other than those adopted by the California Building Standards Code, 2025 (CBSC 2025) for component supports and attachments are not permitted. For distribution system, interior partition wall, and suspended ceiling seismic bracings, test criteria other than those adopted in the CBSC 2025 may be used when approved by HCAI prior to testing.

☒ Analysis

☐ Experience Data

☐ Combination of Testing, Analysis, and/or Experience Data (Please Specify):

REVIEWED FOR CODE COMPLIANCE
OPM-0596
BY: William Staehlin
DATE: 02/20/2026
CALIFORNIA BUILDING CODE, 2025

HCAI Approval

Date: 2/20/2026

Name: William Staehlin Title: Senior Structural Engineer

Condition of Approval (if applicable):

EASE
EQUIPMENT ANCHORAGE
& SEISMIC ENGINEERING

5877 Pine Ave, Ste. 210
Chino Hills, CA. 91709
Phn: (909) 606-7622

Office of Statewide Health Planning and Development

PREAPPROVAL OF MANUFACTURER'S CERTIFICATION

OPM-0596

THIS PREAPPROVAL CONFORMS TO THE 2025 CALIFORNIA BUILDING CODE

MANUFACTURER: **BECKMAN COULTER**

EQUIPMENT NAME: **DxC 500i & DxC 500 AU ANALYZERS**

Date: 1/30/26

GENERAL NOTES

1. THIS HCAI PREAPPROVAL OF MANUFACTURER'S CERTIFICATION (OPM) IS BASED ON THE 2025 CBC. THE DEMANDS (DESIGN FORCES) FOR USE WITH THIS OPM SHALL BE BASED ON THE 2025 CBC
2. THIS DOCUMENT MAY ONLY BE USED WITH THE EXPRESS WRITTEN CONSENT OF THE MANUFACTURER LISTED ABOVE FOR THE SPECIFIC PROJECT SITE AND INSTALLATION LOCATION. THIS DOCUMENT IS INVALID WITHOUT SUCH CONSENT.
3. THIS PREAPPROVAL CONFORMS TO THE 2025 CALIFORNIA BUILDING CODE WHERE SDS IS NOT GREATER THAN 1.15,1.75 & 2.50.
4. FORCES PER ASCE 7-22 SECTION 13.3.1, EQUATIONS 13.3-1, 13.3-2 & 13.3-3,
   WHERE S_{DS} =2.50,I_p=1.5,C_{AR}=1.0,R_{po}=1.5,z/h=0,(R_μ=1.0,H_f =1.0) AT CONCRETE SLAB AT OR BELOW GRADE. SEE FOLLOWING SHEETS FOR Ω_{op}
   WHERE S_{DS} =1.15, I_p = 1.5, C_{AR} = 1.0, R_{po} = 1.5, z/h $\leq$ 0.50, (R_μ =1.3, H_f = 2.25) AT CONCRETE SLAB ON METAL DECK.
   WHERE S_{DS} =1.75, I_p = 1.5, C_{AR} = 1.0, R_{po} = 1.5, z/h $\leq$ 0.50, (R_μ =1.3, H_f = 2.25) AT CONCRETE SLAB ON METAL DECK.
   WHERE S_{DS} =2.50, I_p = 1.5, C_{AR} = 1.0, R_{po} = 1.5, z/h $\leq$ 0.95, (R_μ =1.3, H_f = 3.375) AT CONCRETE SLAB ON METAL DECK.
   SEE FOLLOWING SHEETS FOR Ω_{op}
5. THIS PREAPPROVAL COVERS ONLY THE SUPPORTS AND ATTACHMENTS OF THE EQUIPMENT TO THE STRUCTURE.
6. ALL DESIGN FORCES SHOWN ON THE DRAWINGS ARE FACTORED LOADS THAT SHALL BE USED FOR STRENGTH DESIGN.
7. CONCRETE SLAB ON METAL DECK DETAIL VALID FOR DEMANDS SHOWN AT ANY ELEVATION IN THE BUILDING. (i.e. z/h $\leq$ 0.50, z/h $\leq$ 0.95)
8. CONCRETE SLAB DETAIL VALID FOR DEMANDS SHOWN AT OR BELOW GRADE. (i.e. z/h = 0)
9. **RESPONSIBILITIES OF THE STRUCTURAL ENGINEER OF RECORD OF THE BUILDING**
   - A. PROVIDE SUPPORTING STRUCTURE TO SUPPORT WEIGHTS AND FORCES SHOWN IN ADDITION TO ALL OTHER LOADS.
   - B. VERIFY THAT THE INSTALLATION IS IN CONFORMANCE WITH THE 2025 CBC AND WITH THE DETAILS, MATERIAL AND GAGE OF THE UNIT WHERE ATTACHMENTS ARE MADE AGREE WITH THE INFORMATION SHOWN ON THE PREAPPROVAL DOCUMENTS.
   - C. VERIFY THAT PROJECT SPECIFIC SEISMIC PARAMETERS RESULT IN SEISMIC FORCES (E_h, E_v) THAT DO NOT EXCEED THE VALUES IN THIS OPM.
   - D. VERIFY THAT THE CONCRETE SLAB TO WHICH THE EQUIPMENT IS ANCHORED MEETS THE REQUIREMENTS OF THE APPLICABLE ICC ESR REPORT AND THIS OPM.
   - E. VERIFY THAT THE ANCHORS ARE AN ADEQUATE DISTANCE FROM ANY SLAB EDGES OR OPENINGS (SEE TYPICAL DETAIL ON SHEET 2).
   - F. VERIFY THAT ALL NEW OR EXISTING ANCHORS ARE AN ADEQUATE DISTANCE FROM THE UNIT ATTACHMENTS AND CHECK FOR INTERACTION WHERE OTHER ANCHORS ARE WITHIN 18" OR 6hef FROM THIS UNIT'S ANCHORS.

REGISTERED PROFESSIONAL ENGINEER
JONATHAN ROBERSON
No. 4197
EXP. 6-30-2026
1/30/26
STRUCTURAL
STATE OF CALIFORNIA

NOT STRUCTURAL ENGINEER OF RECORD

REVIEWED FOR CODE COMPLIANCE
HCAI
OPM-0596
BY: William Staehlin
DATE: 02/20/2026
CALIFORNIA BUILDING CODE 2025

10. **EXPANSION ANCHORS:**

A. ATTACHMENT IS TO BE MADE WITH THE ANCHORS LISTED BELOW AND INSTALLED AS DESCRIBED IN THE CORRESPONDING ICC REPORT.

Anchor Diameter	Concrete Type	Min. f'c (psi)	Anchor Type	ICC Report No.	Min. Embed.	Min. Spacing	Min. Edge Dist.	Min. Conc. Thickness	Torque Test	Direct Tension Test
1/2"	Sand Light Weight	3000	Hilti Kwik Bolt TZ2 (CARBON STEEL)	ESR-4266	2.5"	7.5"	14"	See Detail "A"	50 FT-LB	N/A
3/8"	Sand Light Weight	3000	Hilti Kwik Bolt TZ2 (CARBON STEEL)	ESR-4266	2"	5"	18"	3.25"	30 FT-LB	1090 lb
1/2"	Normal Weight	3000	Hilti Kwik Bolt TZ2 (CARBON STEEL)	ESR-4266	2"	4"	14"	4"	50 FT-LB	1653 lb

B. THIS PREAPPROVAL ALLOWS FOR UP TO A MAXIMUM OF 2 ADJACENT CONCRETE SLAB EDGES, 14" & 18 AWAY MINIMUM (i.e. - CORNER). SEE ADJACENT DETAIL FOR ADDITIONAL MINIMUM ALLOWABLE CONCRETE EDGE DISTANCES.

C. TESTING AND SPECIAL INSPECTION OF EXPANSION ANCHORS SHALL BE PERFORMED BY AN APPROVED INDEPENDENT AGENCY EMPLOYED BY THE FACILITY OWNER PER CBC 1704A & 1910A.5 AND CAC 7-149. ALL REPORTS SHALL BE SENT TO THE INSPECTOR OF RECORD, OWNER AND THE ARCHITECT OR ENGINEER IN RESPONSIBLE CHARGE.

(i) DIRECT PULL TENSION TEST OR TORQUE TEST AT LEAST 50% OF THE ANCHORS.

(ii) ACCEPTANCE CRITERIA:

- DIRECT TENSION TEST: THE ANCHOR SHOULD HAVE NO OBSERVABLE MOVEMENT AT THE TEST LOAD. A PRACTICAL WAY TO DETERMINE OBSERVABLE MOVEMENT IS THAT THE WASHER BECOMES LOOSE.
- TORQUE TEST: THE APPLICABLE TORQUE MUST BE ACHIEVED WITHIN THE FOLLOWING LIMITS: WEDGE TYPE : 1/2 TURN OF THE NUT

(iii) IF ANY ANCHOR FAILS, TEST ALL ANCHORS.

D. AVOID DAMAGING EXISTING STEEL REINFORCING IN CONCRETE SLAB WHEN INSTALLING CONCRETE EXPANSION ANCHORS.

E. PROVIDE FOR FULL THREAD ENGAGEMENT OF NUT & WASHER.

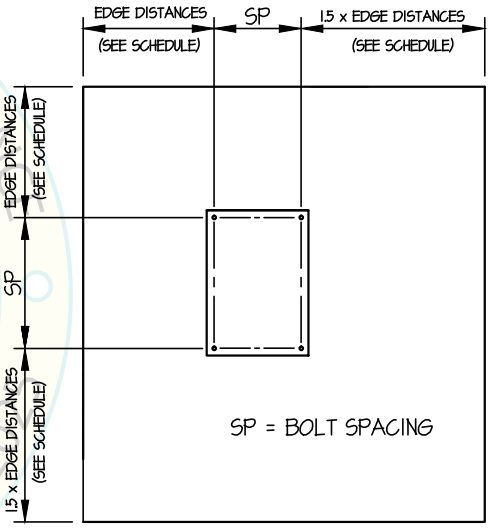

TYPICAL CONCRETE EDGE DETAIL
(SLAB AT OR BELOW GRADE ONLY)

11. BOLTS THROUGH CONCRETE ON METAL DECK

A. BOLTS SHALL BE TORQUED BY 3/4 TURN OF THE NUTS AFTER THE SNUG TIGHT (THE SNUG-TIGHT CONDITION IS DEFINED AS THE TIGHTNESS REQUIRED TO BRING THE CONNECTED PLIES INTO FIRM CONTACT) CONDITION IS ACHIEVED, UNLESS OTHERWISE NOTED.

B. THROUGH BOLT HOLES SHALL BE 1/16" LARGER THAN BOLT SIZE (HOLE SIZE = BOLT SIZE + 1/16) FOR CONCRETE.

C. THROUGH-BOLTS IN CONCRETE SHALL RECEIVE SPECIAL INSPECTION AND TESTING (THROUGH BOLTS WITH STEEL TO STEEL CONNECTION IN TENSION DO NOT REQUIRE TENSION TESTING) IN ACCORDANCE WITH REQUIREMENTS FOR POST-INSTALLED ANCHORS.

REGISTERED PROFESSIONAL ENGINEER
JONATHAN ROBERSON
No. 4197
EXP. 6-30-2026
1/30/26
STRUCTURAL
STATE OF CALIFORNIA

REVIEWED FOR CODE COMPLIANCE
HCAi
OPM-0596
BY: William Staehlin
DATE: 02/20/2026
CALIFORNIA BUILDING CODE, 2022
NOT STRUCTURAL ENGINEERED

BECKMAN COULTER

DxC 500i & DxC 500 AU ANALYZERS

DES. J. ROBERSON		SHEET 3
JOB NO. 11-2519		
DATE 1/30/26		OF 16 SHEETS

SEISMIC SUPPORTS & ATTACHMENTS

CONCRETE SLAB AT OR BELOW GRADE

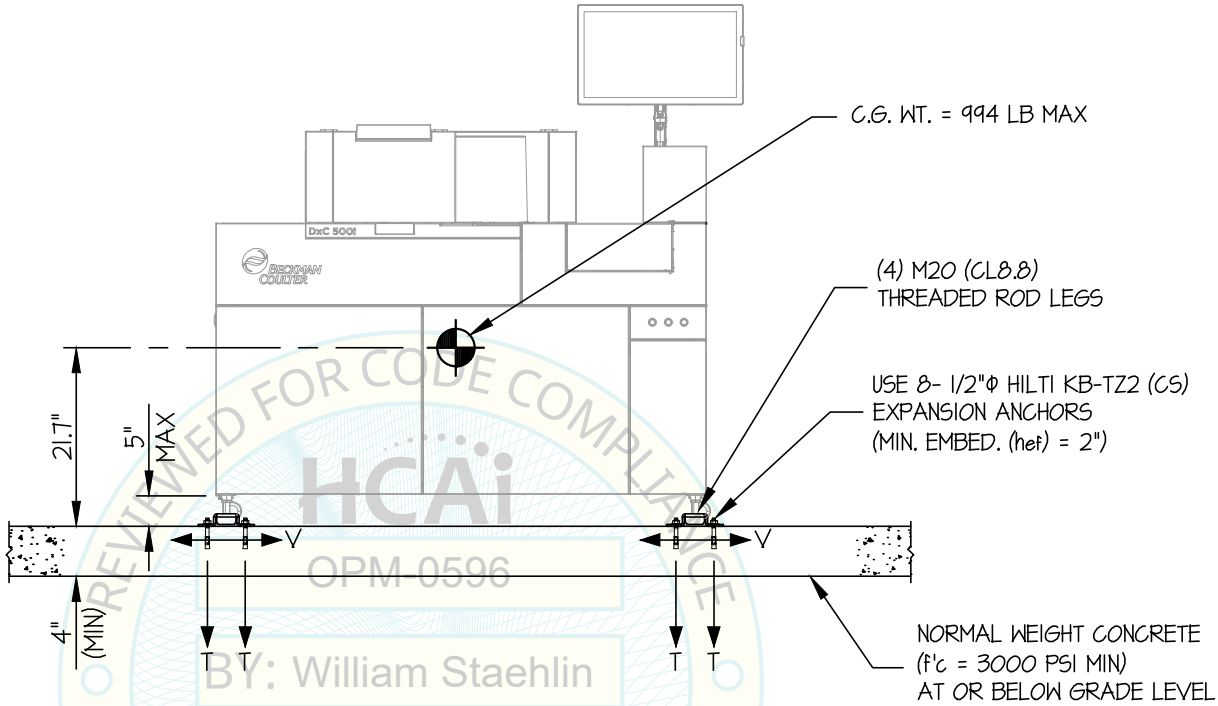

FRONT ELEVATION
(DxC 500 AU)

Tu = 514 LB/BOLT (MAX)
Vu = 664 LB/BOLT (MAX)
(VALUES INCLUDE Ω_{op})

REVIEWED FOR CODE COMPLIANCE
HCAi
OPM-0596
BY: William Staehlin
DATE: 02/20/2026
CALIFORNIA BUILDING CODE 2025

NOTES:

1. FORCES ARE DETERMINED PER 2025 CALIFORNIA BUILDING CODE AND ASCE 7-22.
   STRENGTH DESIGN IS USED. (EXAMPLE: S_{DS}=2.50, I_p=1.5, C_{AR}=1.0, R_{po}=1.5, Ω_{op}=2.0, R_U=1.0, H_f=1.0, z/h=0)
   HORIZONTAL FORCE (E_h) = 1.125 W_p
   HORIZONTAL FORCE (E_{mh}) = 2.25 W_p (FOR CONCRETE ANCHORAGE)
   VERTICAL FORCE (E_v) = 0.50 W_p
2. THIS PREAPPROVAL ENCOMPASSES WEIGHTS AND VERTICAL C.G. POSITIONS NOT EXCEEDING VALUES SHOWN.
3. THIS PREAPPROVAL WAS PREPARED WITHOUT KNOWLEDGE OF ANY SITE CONDITION. COMPATIBILITY FOR USE WITH A SITE SHALL BE EVALUATED BY THE STRUCTURAL ENGINEER OF RECORD OF THE INSTALLATION (SEOR). USE REQUIRES APPROVAL BY THE SEOR.
4. STRUCTURAL ENGINEER OF RECORD FOR THE INSTALLATION SHALL VERIFY ALL CONDITIONS, EVALUATE INTERACTION WITH ADJACENT EQUIPMENT AND ANCHORS, AND PROVIDE SUPPORT STRUCTURE DESIGNED TO SUPPORT WEIGHTS AND FORCES SHOWN IN COMBINATION WITH ALL OTHER LOADS THAT MAY BE PRESENT.
5. SEE GENERAL NOTES: SHEET 1 AND 2

REGISTERED PROFESSIONAL ENGINEER
JONATHAN ROBERSON
No. 4197
EXP. 6-30-2026
1/30/26
STRUCTURAL
STATE OF CALIFORNIA

NOT STRUCTURAL ENGINEER OF RECORD

BECKMAN COULTER

DxC 500i & DxC 500 AU ANALYZERS

DES.	J. ROBERSON
JOB NO.	11-2519
DATE	1/30/26

SHEET 4 OF 16 SHEETS

SEISMIC SUPPORTS & ATTACHMENTS

CONCRETE SLAB AT OR BELOW GRADE

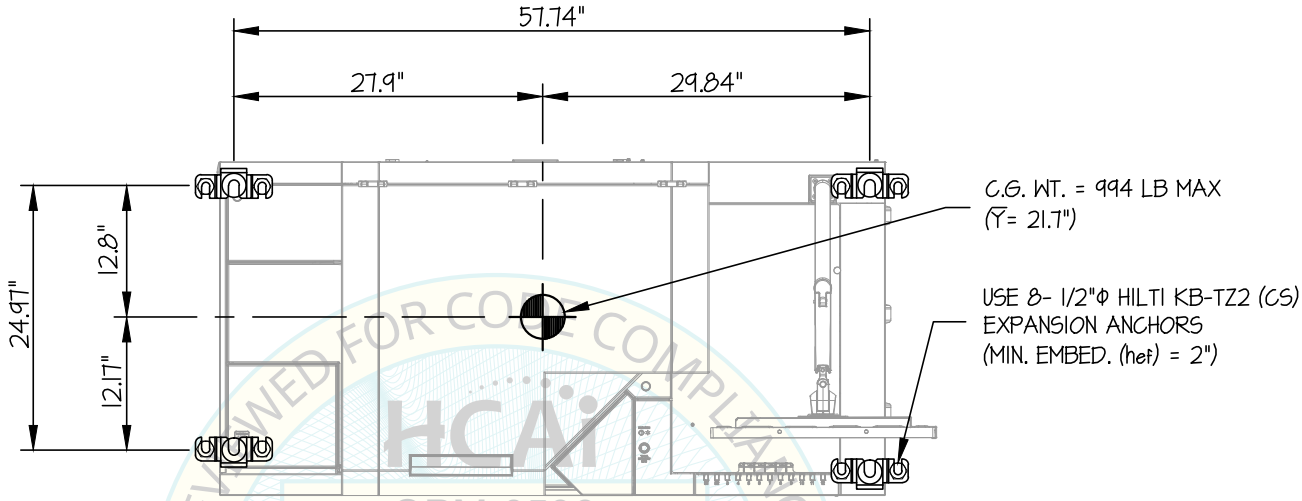

PLAN AT BASE
(DxC 500 AU)

REVIEWED FOR CODE COMPLIANCE
HCAi
OPM-0596
BY: William Staehlin
DATE: 02/20/2026
CALIFORNIA BUILDING CODE, 2025

REGISTERED PROFESSIONAL ENGINEER
JONATHAN ROBERSON
No. 4197
EXP. 6-30-2026
1/30/26
STRUCTURAL
STATE OF CALIFORNIA

NOT STRUCTURAL ENGINEER OPINED

BECKMAN COULTER

DxC 500i & DxC 500 AU ANALYZERS

DES.	J. ROBERSON
JOB NO.	11-2519
DATE	1/30/26

SHEET 5 OF 16 SHEETS

SEISMIC SUPPORTS & ATTACHMENTS

CONCRETE SLAB AT OR BELOW GRADE

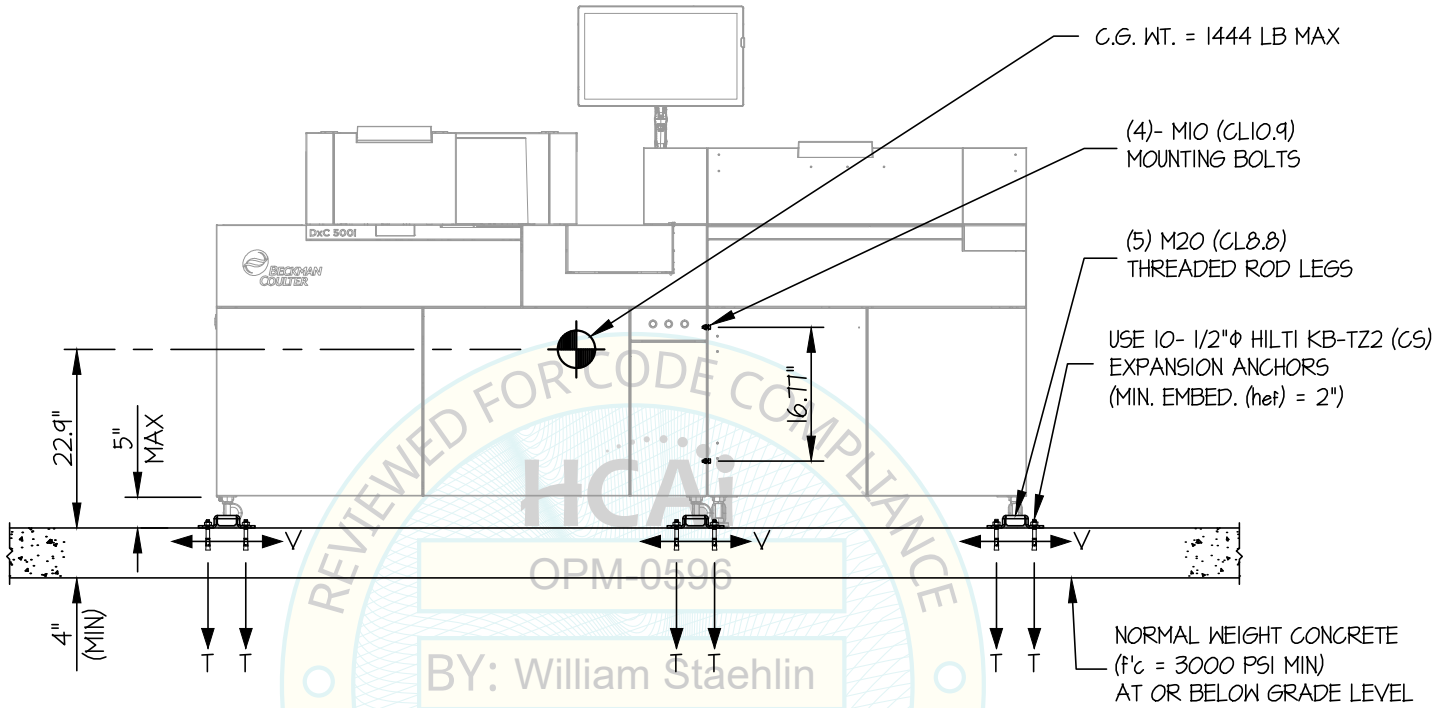

Tu = 799 LB/BOLT (MAX)
Vu = 1048 LB/BOLT (MAX)
(VALUES INCLUDE Ω_{op})

FRONT ELEVATION
(DxC 500i)

REVIEWED FOR CODE COMPLIANCE
HCAi
OPM-0596
BY: William Staehlin
DATE: 02/20/2026
CALIFORNIA BUILDING CODE 2025

NOTES:

1. FORCES ARE DETERMINED PER 2025 CALIFORNIA BUILDING CODE AND ASCE 7-22.
   STRENGTH DESIGN IS USED. (EXAMPLE: S_{DS}=2.50, I_p=1.5, C_{AR}=1.0, R_{po}=1.5, Ω_{op}=2.0, R_U=1.0, H_f=1.0, z/h=0)
   - HORIZONTAL FORCE (E_h) = 1.125 W_p
   - HORIZONTAL FORCE (E_{mh}) = 2.25 W_p (FOR CONCRETE ANCHORAGE)
   - VERTICAL FORCE (E_v) = 0.50 W_p
2. THIS PREAPPROVAL ENCOMPASSES WEIGHTS AND VERTICAL C.G. POSITIONS NOT EXCEEDING VALUES SHOWN.
3. THIS PREAPPROVAL WAS PREPARED WITHOUT KNOWLEDGE OF ANY SITE CONDITION. COMPATIBILITY FOR USE WITH A SITE SHALL BE EVALUATED BY THE STRUCTURAL ENGINEER OF RECORD OF THE INSTALLATION (SEOR). USE REQUIRES APPROVAL BY THE SEOR.
4. STRUCTURAL ENGINEER OF RECORD FOR THE INSTALLATION SHALL VERIFY ALL CONDITIONS, EVALUATE INTERACTION WITH ADJACENT EQUIPMENT AND ANCHORS, AND PROVIDE SUPPORT STRUCTURE DESIGNED TO SUPPORT WEIGHTS AND FORCES SHOWN IN COMBINATION WITH ALL OTHER LOADS THAT MAY BE PRESENT.
5. SEE GENERAL NOTES: SHEET 1 AND 2

REGISTERED PROFESSIONAL ENGINEER
JONATHAN ROBERSON
No. 4197
EXP. 6-30-2026
1/30/26
STRUCTURAL
STATE OF CALIFORNIA

NOT STRUCTURAL ENGINEER OF RECORD

EASE

EQUIPMENT ANCHORAGE & SEISMIC ENGINEERING
www.EquipmentAnchorage.com

BECKMAN COULTER

DxC 500i & DxC 500 AU ANALYZERS

DES.	J. ROBERSON
JOB NO.	11-2519
DATE	1/30/26

SHEET 6 OF 16 SHEETS

SEISMIC SUPPORTS & ATTACHMENTS

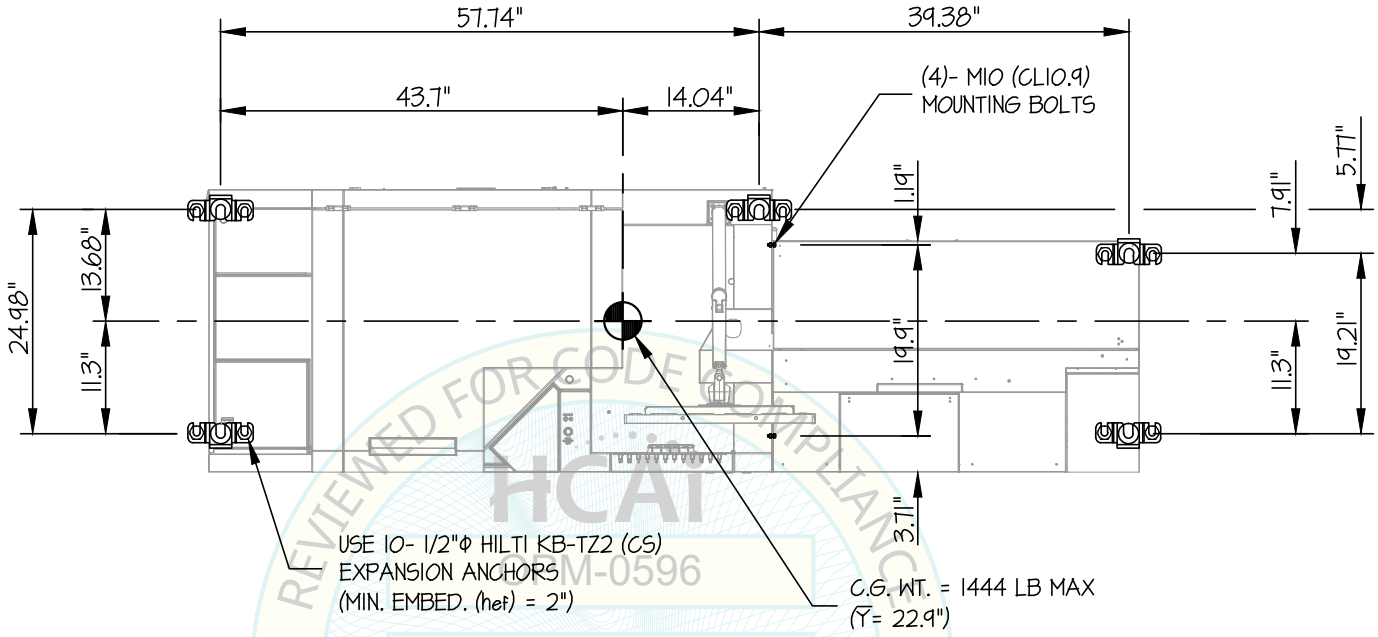

PLAN AT BASE
(DxC 500i)

REVIEWED FOR CODE COMPLIANCE
HCAI
OPM-0596
BY: William Staehlin
DATE: 02/20/2026
CALIFORNIA BUILDING CODE, 2025

REGISTERED PROFESSIONAL ENGINEER
JONATHAN ROBERSON
No. 4197
EXP. 6-30-2026
1/30/26
STRUCTURAL
STATE OF CALIFORNIA

NOT STRUCTURAL ENGINEER ORDERED

BECKMAN COULTER

DxC 500i & DxC 500 AU ANALYZERS

DES. J. ROBERSON		SHEET 7
JOB NO. 11-2519		
DATE 1/30/26		OF 16 SHEETS

SEISMIC SUPPORTS & ATTACHMENTS

CONCRETE SLAB ON METAL DECK

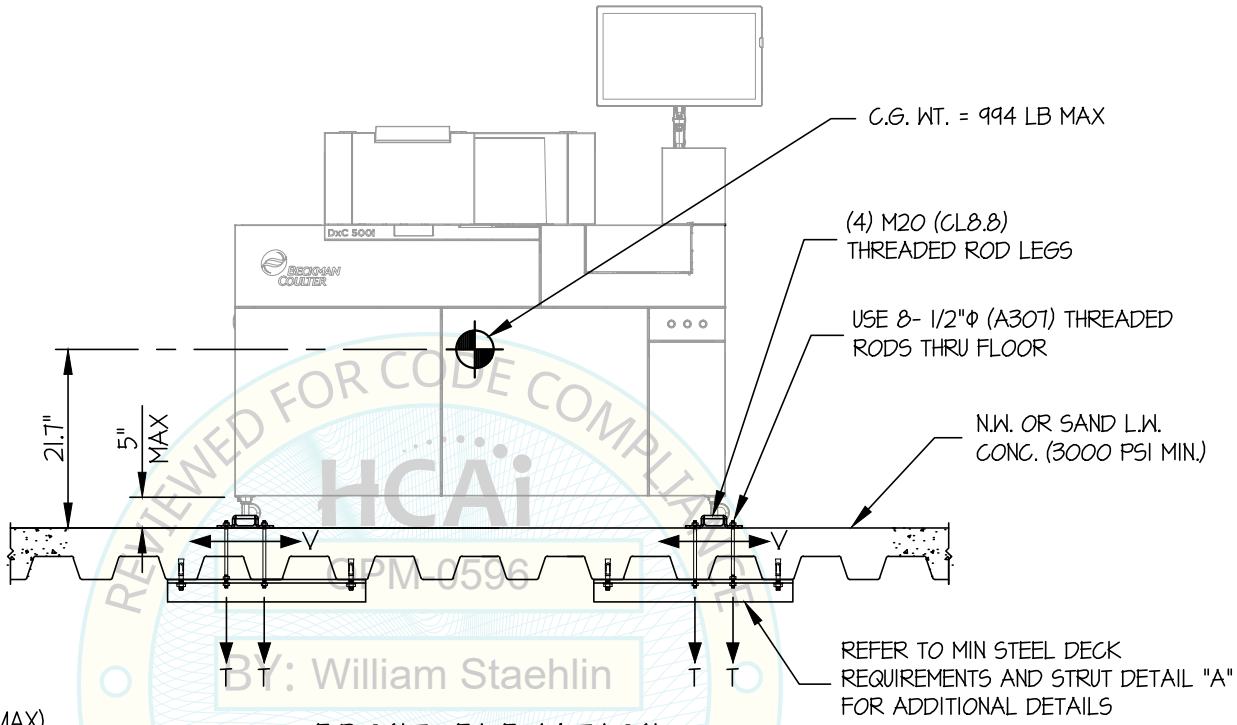

Tu = 602 LB/BOLT (MAX)
Vu = 767 LB/BOLT (MAX)
(VALUES DO NOT INCLUDE Ω_{op})

FRONT ELEVATION
(DxC 500 AU)

REVIEWED FOR CODE COMPLIANCE
HCAi
OPM 0596
BY: William Staehlin
DATE: 02/20/2026
CALIFORNIA BUILDING CODE 2025

NOTES:

1. FORCES ARE DETERMINED PER 2025 CALIFORNIA BUILDING CODE AND ASCE 7-22.
   STRENGTH DESIGN IS USED. (EXAMPLE: S_{DS}=2.50, I_p=1.5, C_{AR}=1.0, R_{po}=1.5, Ω_{op}=2.0, R_U=1.3, H_f=3.375, z/h≤0.95)

   HORIZONTAL FORCE (E_h) = 2.60 W_p
   HORIZONTAL FORCE (E_{mh}) = 5.20 W_p (FOR CONCRETE ANCHORAGE)
   VERTICAL FORCE (E_v) = 0.50 W_p

2. THIS PREAPPROVAL ENCOMPASSES WEIGHTS AND VERTICAL C.G. POSITIONS NOT EXCEEDING VALUES SHOWN.
3. THIS PREAPPROVAL WAS PREPARED WITHOUT KNOWLEDGE OF ANY SITE CONDITION. COMPATIBILITY FOR USE WITH A SITE SHALL BE EVALUATED BY THE STRUCTURAL ENGINEER OF RECORD OF THE INSTALLATION (SEOR). USE REQUIRES APPROVAL BY THE SEOR.
4. STRUCTURAL ENGINEER OF RECORD FOR THE INSTALLATION SHALL VERIFY ALL CONDITIONS, EVALUATE INTERACTION WITH ADJACENT EQUIPMENT AND ANCHORS, AND PROVIDE SUPPORT STRUCTURE DESIGNED TO SUPPORT WEIGHTS AND FORCES SHOWN IN COMBINATION WITH ALL OTHER LOADS THAT MAY BE PRESENT.
5. SEE GENERAL NOTES: SHEET 1 AND 2

REGISTERED PROFESSIONAL ENGINEER
JONATHAN ROBERSON
No. 4197
EXP. 6-30-2026
1/30/26
STRUCTURAL
STATE OF CALIFORNIA

NOT STRUCTURAL ENGINEER OF RECORD

BECKMAN COULTER

DxC 500i & DxC 500 AU ANALYZERS

DES.	J. ROBERSON
JOB NO.	11-2519
DATE	1/30/26

SHEET 8 OF 16 SHEETS

SEISMIC SUPPORTS & ATTACHMENTS

CONCRETE SLAB ON METAL DECK

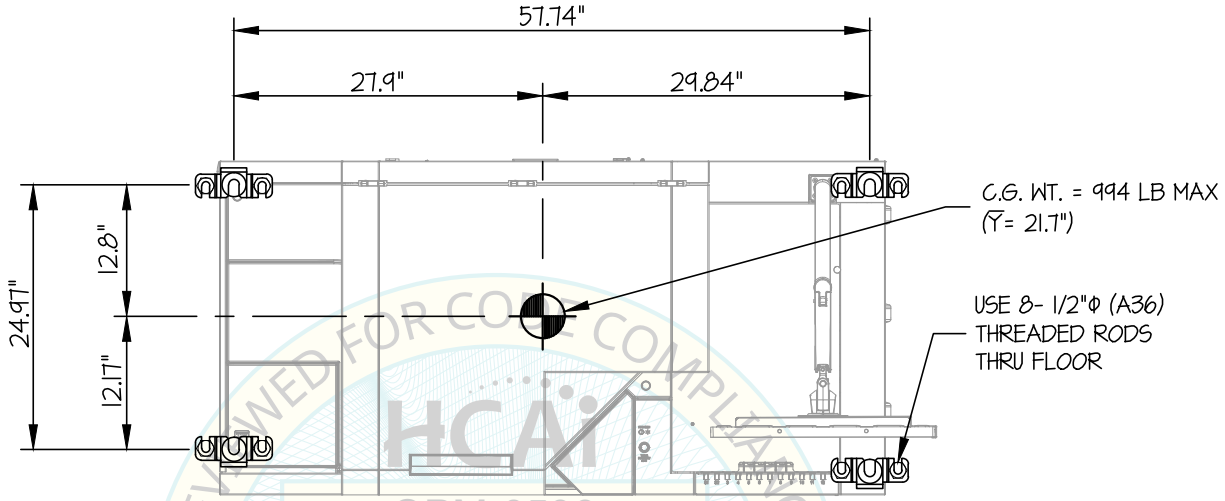

PLAN AT BASE
(DxC 500 AU)

REVIEWED FOR CODE COMPLIANCE
HCAi
OPM-0596
BY: William Staehlin
DATE: 02/20/2026
CALIFORNIA BUILDING CODE, 2025

REGISTERED PROFESSIONAL ENGINEER
JONATHAN ROBERSON
No. 4197
EXP. 6-30-2026
1/30/26
STRUCTURAL
STATE OF CALIFORNIA

NOT STRUCTURAL ENGINEER OPINED

BECKMAN COULTER

DxC 500i & DxC 500 AU ANALYZERS

DES.	J. ROBERSON	SHEET 9
JOB NO.	11-2519	
DATE	1/30/26	OF 16 SHEETS

SEISMIC ANCHORAGE

(EXPANSION ANCHORS)

CONCRETE SLAB ON METAL DECK

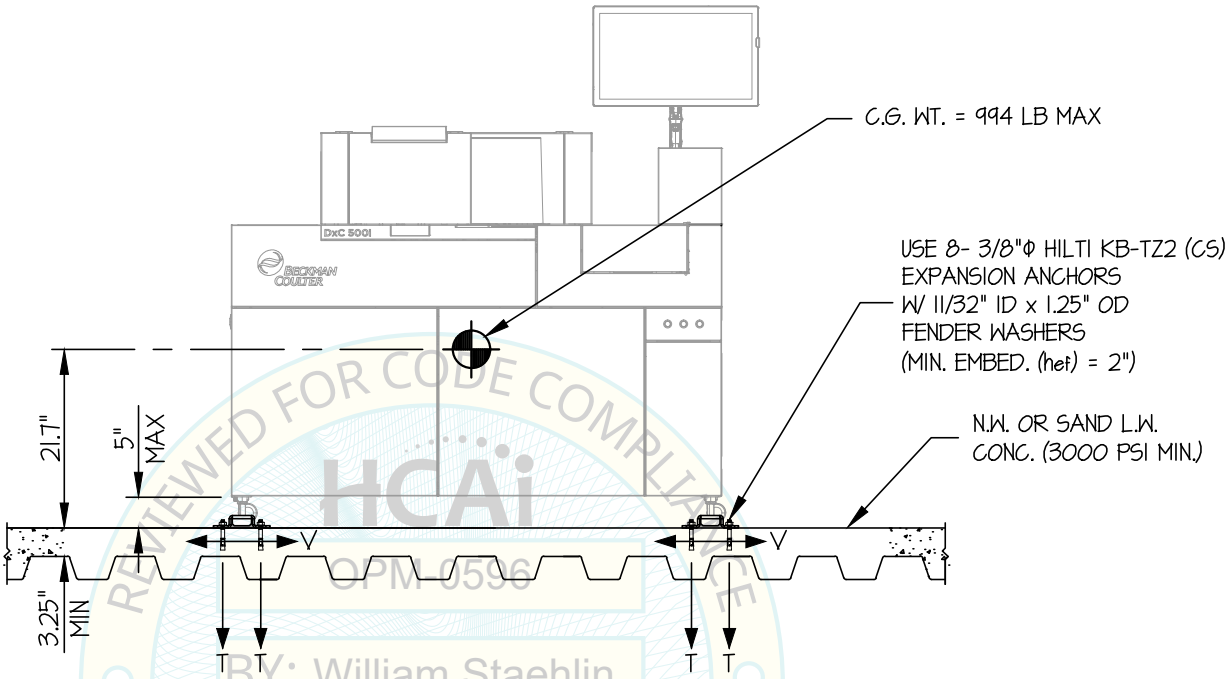

Tu = 537 LB/BOLT (MAX)
Vu = 714 LB/BOLT (MAX)
(VALUES INCLUDE Ω_{op})

FRONT ELEVATION

(DxC 500 AU)

REVIEWED FOR CODE COMPLIANCE
HCAi
OPM 0596
BY: William Staehlin
DATE: 02/20/2026
CALIFORNIA BUILDING CODE 2025

NOTES:

1. FORCES ARE DETERMINED PER 2025 CALIFORNIA BUILDING CODE AND ASCE 7-22.
   STRENGTH DESIGN IS USED. (EXAMPLE: S_{DS}=1.75, I_p=1.5, C_{AR}=1.0, R_{po}=1.5, Ω_{op}=2.0, R_μ=1.3, H_f=2.25, z/h≤0.50)

   HORIZONTAL FORCE (E_h) = 1.21 W_p
   HORIZONTAL FORCE (E_{mh}) = 2.42 W_p (FOR CONCRETE ANCHORAGE)
   VERTICAL FORCE (E_v) = 0.35 W_p
2. THIS PREAPPROVAL ENCOMPASSES WEIGHTS AND VERTICAL C.G. POSITIONS NOT EXCEEDING VALUES SHOWN.
3. THIS PREAPPROVAL WAS PREPARED WITHOUT KNOWLEDGE OF ANY SITE CONDITION. COMPATIBILITY FOR USE WITH A SITE SHALL BE EVALUATED BY THE STRUCTURAL ENGINEER OF RECORD OF THE INSTALLATION (SEOR). USE REQUIRES APPROVAL BY THE SEOR.
4. STRUCTURAL ENGINEER OF RECORD FOR THE INSTALLATION SHALL VERIFY ALL CONDITIONS, EVALUATE INTERACTION WITH ADJACENT EQUIPMENT AND ANCHORS, AND PROVIDE SUPPORT STRUCTURE DESIGNED TO SUPPORT WEIGHTS AND FORCES SHOWN IN COMBINATION WITH ALL OTHER LOADS THAT MAY BE PRESENT.
5. SEE GENERAL NOTES: SHEET 1 AND 2

REGISTERED PROFESSIONAL ENGINEER
JONATHAN ROBERSON
No. 4197
EXP. 6-30-2026
1/30/26
STRUCTURAL
STATE OF CALIFORNIA

NOT STRUCTURAL UNLESS SIGNED & SEALED

BECKMAN COULTER

DxC 500i & DxC 500 AU ANALYZERS

DES.	J. ROBERSON
JOB NO.	11-2519
DATE	1/30/26

SHEET 10 OF 16 SHEETS

SEISMIC SUPPORTS & ATTACHMENTS

CONCRETE SLAB ON METAL DECK
($S_{DS} \leq 1.75$, z/h=0.50)

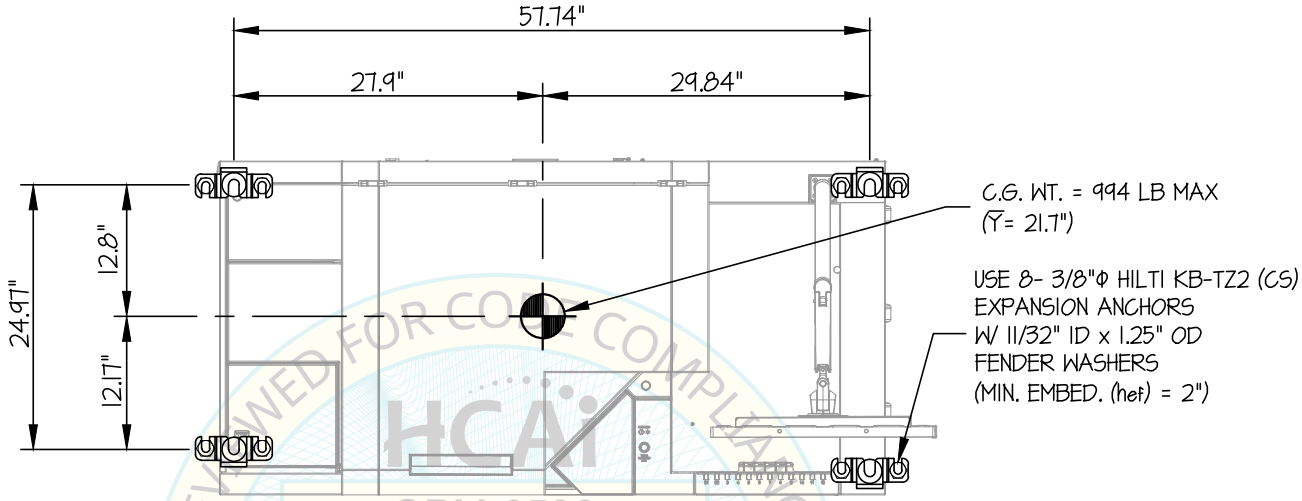

PLAN AT BASE
(DxC 500 AU)

REVIEWED FOR CODE COMPLIANCE
HCAi
OPM-0596
BY: William Staehlin
DATE: 02/20/2026
CALIFORNIA BUILDING CODE, 2025

REGISTERED PROFESSIONAL ENGINEER
JONATHAN ROBERSON
No. 4197
EXP. 6-30-2026
1/30/26
STRUCTURAL
STATE OF CALIFORNIA
NOT STRUCTURAL ENGINEER OPM-0596

BECKMAN COULTER

DxC 500i & DxC 500 AU ANALYZERS

DES.	J. ROBERSON
JOB NO.	11-2519
DATE	1/30/26

SHEET 11 OF 16 SHEETS

SEISMIC SUPPORTS & ATTACHMENTS

CONCRETE SLAB ON METAL DECK

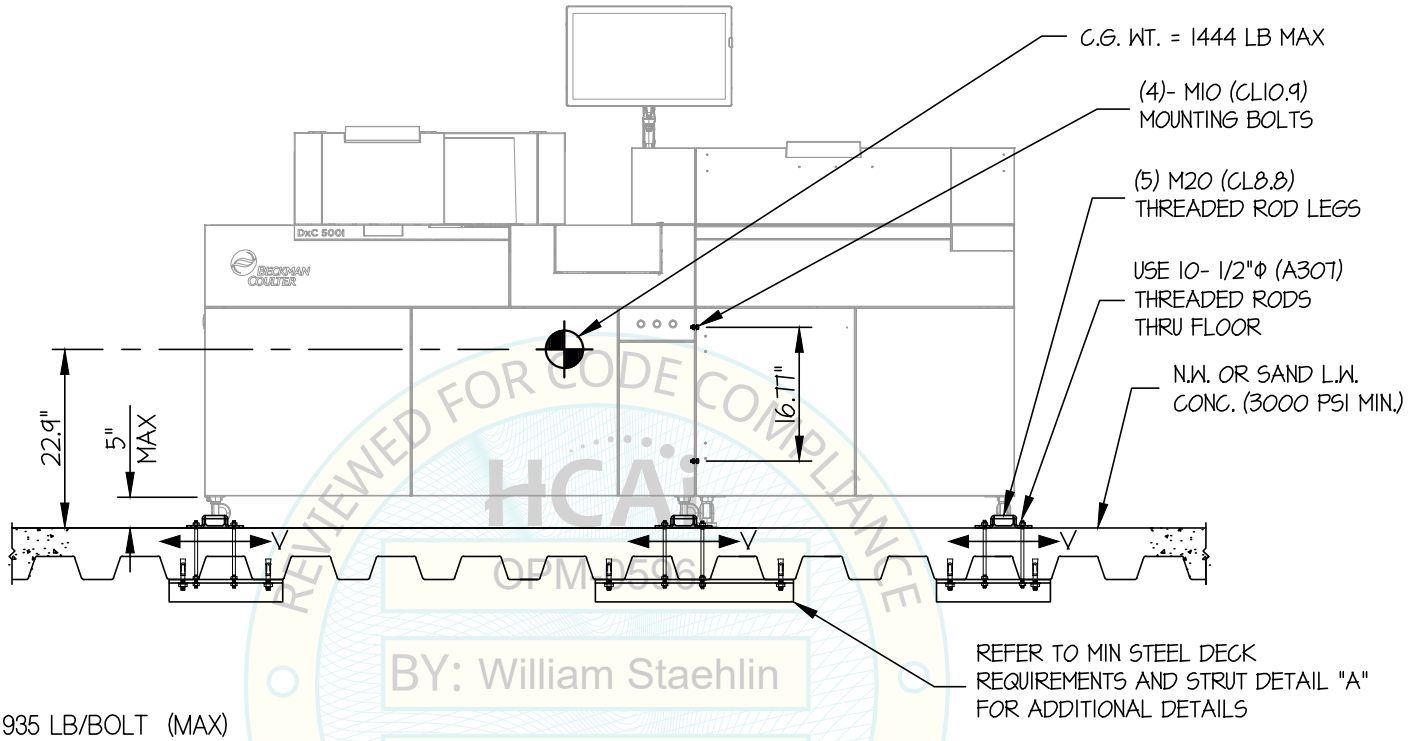

Tu = 935 LB/BOLT (MAX)
Vu = 1186 LB/BOLT (MAX)
(VALUES DO NOT INCLUDE Ω_{op})

FRONT ELEVATION
(DxC 500i)

REVIEWED FOR CODE COMPLIANCE
HCAi
OPM-0596
BY: William Staehlin
DATE: 02/20/2026
CALIFORNIA BUILDING CODE 2025

NOTES:

1. FORCES ARE DETERMINED PER 2025 CALIFORNIA BUILDING CODE AND ASCE 7-22.
   STRENGTH DESIGN IS USED. (EXAMPLE: S_{DS}=2.50, I_p=1.5, C_{AR}=1.0, R_{po}=1.5, Ω_{op}=2.0, R_U=1.3, H_f=3.375, $z/h \leq 0.95$)
   HORIZONTAL FORCE (E_h) = 2.60 W_p
   HORIZONTAL FORCE (E_{mh}) = 5.20 W_p (FOR CONCRETE ANCHORAGE)
   VERTICAL FORCE (E_v) = 0.50 W_p
2. THIS PREAPPROVAL ENCOMPASSES WEIGHTS AND VERTICAL C.G. POSITIONS NOT EXCEEDING VALUES SHOWN.
3. THIS PREAPPROVAL WAS PREPARED WITHOUT KNOWLEDGE OF ANY SITE CONDITION. COMPATIBILITY FOR USE WITH A SITE SHALL BE EVALUATED BY THE STRUCTURAL ENGINEER OF RECORD OF THE INSTALLATION (SEOR). USE REQUIRES APPROVAL BY THE SEOR.
4. STRUCTURAL ENGINEER OF RECORD FOR THE INSTALLATION SHALL VERIFY ALL CONDITIONS, EVALUATE INTERACTION WITH ADJACENT EQUIPMENT AND ANCHORS, AND PROVIDE SUPPORT STRUCTURE DESIGNED TO SUPPORT WEIGHTS AND FORCES SHOWN IN COMBINATION WITH ALL OTHER LOADS THAT MAY BE PRESENT.
5. SEE GENERAL NOTES: SHEET 1 AND 2

REGISTERED PROFESSIONAL ENGINEER
JONATHAN ROBERSON
No. 4197
EXP. 6-30-2026
1/30/26
STRUCTURAL
STATE OF CALIFORNIA

NOT STRUCTURAL ENGINEER ORDERED

EASE

EQUIPMENT ANCHORAGE & SEISMIC ENGINEERING
www.EquipmentAnchorage.com

BECKMAN COULTER

DxC 500i & DxC 500 AU ANALYZERS

DES.	J. ROBERSON
JOB NO.	11-2519
DATE	1/30/26

SHEET 12 OF 16 SHEETS

SEISMIC SUPPORTS & ATTACHMENTS

CONCRETE SLAB ON METAL DECK

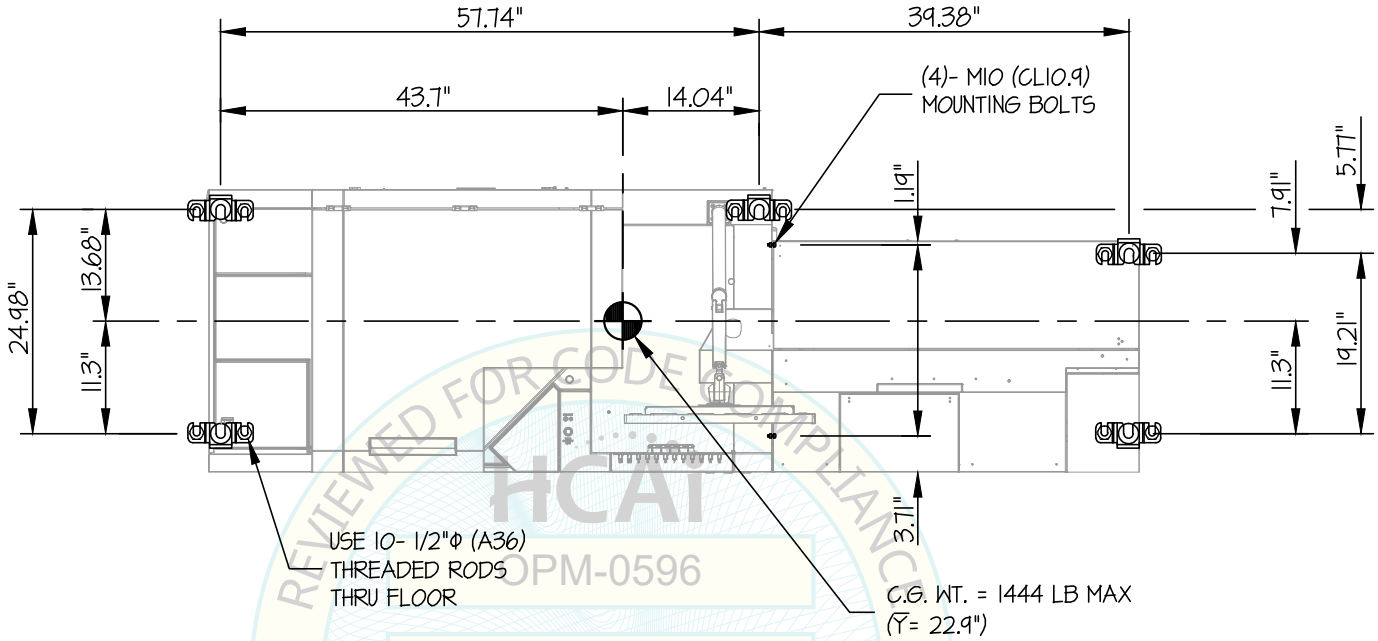

PLAN AT BASE
(DxC 500i)

REVIEWED FOR CODE COMPLIANCE
HCAI
OPM-0596
BY: William Staehlin
DATE: 02/20/2026
CALIFORNIA BUILDING CODE, 2025

REGISTERED PROFESSIONAL ENGINEER
JONATHAN ROBERSON
No. 4197
EXP. 6-30-2026
1/30/26
STRUCTURAL
STATE OF CALIFORNIA

NOT STRUCTURAL ENGINEER OPINED

EASE

EQUIPMENT ANCHORAGE & SEISMIC ENGINEERING
www.EquipmentAnchorage.com

BECKMAN COULTER

DxC 500i & DxC 500 AU ANALYZERS

DES.	J. ROBERSON
JOB NO.	11-2519
DATE	1/30/26

SHEET 12 OF 16 SHEETS

SEISMIC SUPPORTS & ATTACHMENTS

CONCRETE SLAB ON METAL DECK

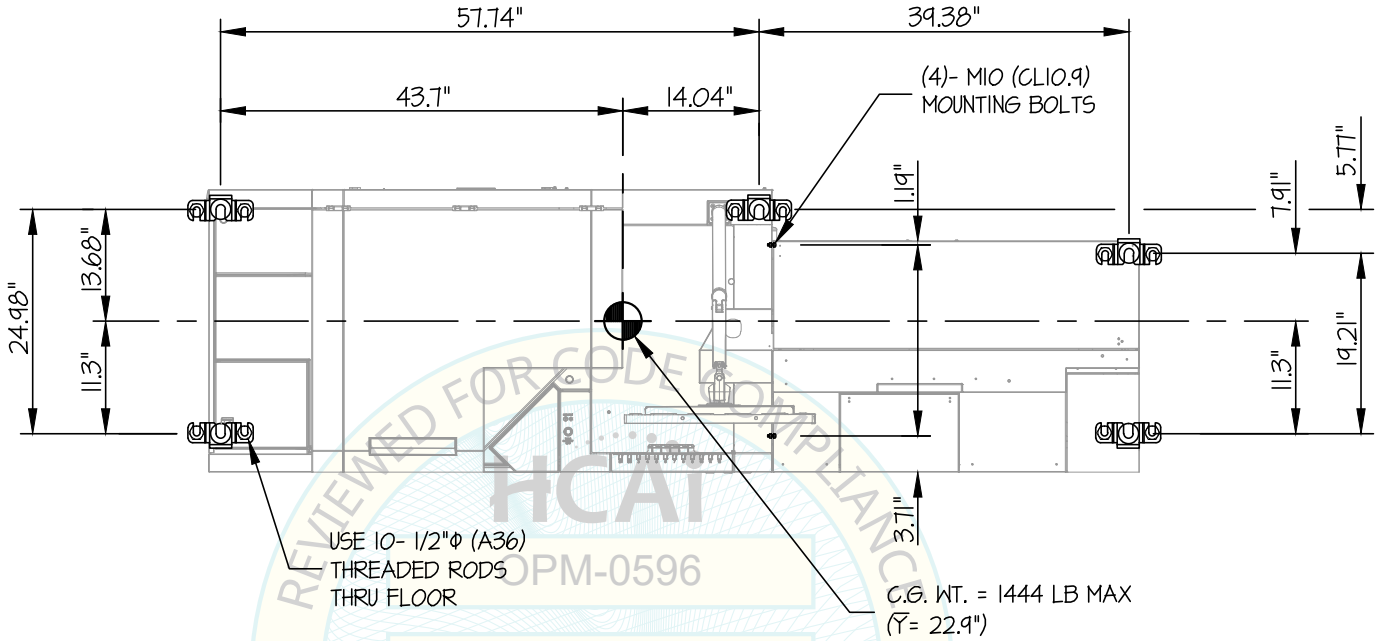

PLAN AT BASE
(DxC 500i)

REVIEWED FOR CODE COMPLIANCE
HCAI
OPM-0596
BY: William Staehlin
DATE: 02/20/2026
CALIFORNIA BUILDING CODE, 2025

REGISTERED PROFESSIONAL ENGINEER
JONATHAN ROBERSON
No. 4197
EXP. 6-30-2026
1/30/26
STRUCTURAL
STATE OF CALIFORNIA

NOT STRUCTURAL ENGINEER OPINED

BECKMAN COULTER

DxC 500i & DxC 500 AU ANALYZERS

DES.	J. ROBERSON
JOB NO.	11-2519
DATE	1/30/26

SHEET 13 OF 16 SHEETS

SEISMIC ANCHORAGE

(EXPANSION ANCHORS)

CONCRETE SLAB ON METAL DECK

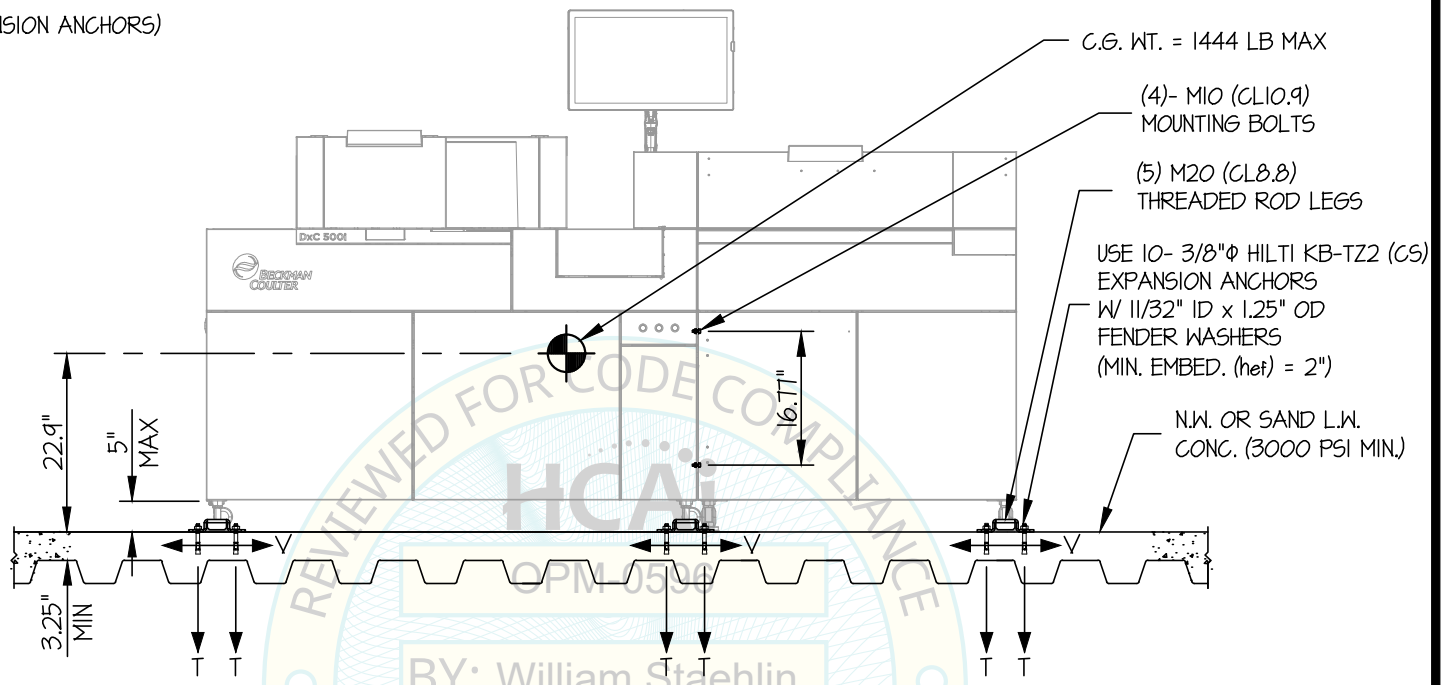

Tu = 499 LB/BOLT (MAX)
Vu = 730 LB/BOLT (MAX)
(VALUES INCLUDE Ω_{op})

FRONT ELEVATION
(DxC 500i)

NOTES:

1. FORCES ARE DETERMINED PER 2025 CALIFORNIA BUILDING CODE AND ASCE 7-22.
   STRENGTH DESIGN IS USED. (EXAMPLE: S_{DS}=1.15, I_p=1.5, C_{AR}=1.0, R_{po}=1.5, Ω_{op}=2.0, R_μ=1.3, H_f=2.25, z/h≤0.50)

   HORIZONTAL FORCE (E_h) = 0.80 W_p
   HORIZONTAL FORCE (E_{mh}) = 1.60 W_p (FOR CONCRETE ANCHORAGE)
   VERTICAL FORCE (E_v) = 0.23 W_p
2. THIS PREAPPROVAL ENCOMPASSES WEIGHTS AND VERTICAL C.G. POSITIONS NOT EXCEEDING VALUES SHOWN.
3. THIS PREAPPROVAL WAS PREPARED WITHOUT KNOWLEDGE OF ANY SITE CONDITION. COMPATIBILITY FOR USE WITH A SITE SHALL BE EVALUATED BY THE STRUCTURAL ENGINEER OF RECORD OF THE INSTALLATION (SEOR). USE REQUIRES APPROVAL BY THE SEOR.
4. STRUCTURAL ENGINEER OF RECORD FOR THE INSTALLATION SHALL VERIFY ALL CONDITIONS, EVALUATE INTERACTION WITH ADJACENT EQUIPMENT AND ANCHORS, AND PROVIDE SUPPORT STRUCTURE DESIGNED TO SUPPORT WEIGHTS AND FORCES SHOWN IN COMBINATION WITH ALL OTHER LOADS THAT MAY BE PRESENT.
5. SEE GENERAL NOTES: SHEET 1 AND 2

REGISTERED PROFESSIONAL ENGINEER
JONATHAN ROBERSON
No. 4197
EXP. 6-30-2026
1/30/26
STRUCTURAL
STATE OF CALIFORNIA

REVIEWED FOR CODE COMPLIANCE
HCAi
OPM-0596
BY: William Staehlin
DATE: 02/20/2026
CALIFORNIA BUILDING CODE 2025
NOT STRUCTURAL ENGINEER OF RECORD

EASE

EQUIPMENT ANCHORAGE & SEISMIC ENGINEERING
www.EquipmentAnchorage.com

BECKMAN COULTER

DxC 500i & DxC 500 AU ANALYZERS

DES.	J. ROBERSON
JOB NO.	11-2519
DATE	1/30/26

SHEET 14 OF 16 SHEETS

SEISMIC SUPPORTS & ATTACHMENTS

CONCRETE SLAB ON METAL DECK
($S_{DS} \leq 1.15$, z/h=0.50)

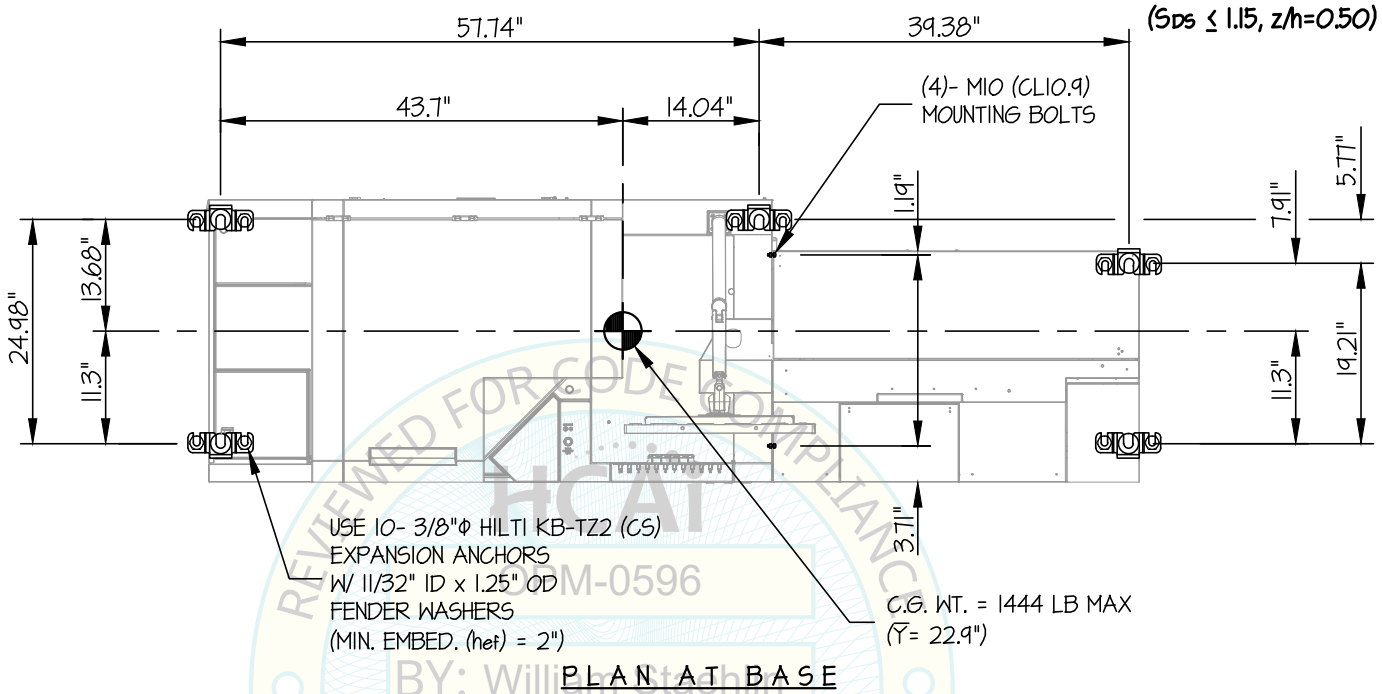

PLAN AT BASE
(DxC 500i)

REVIEWED FOR CODE COMPLIANCE
HCAI
OPM-0596
BY: William Staehlin
DATE: 02/20/2026
CALIFORNIA BUILDING CODE, 2025

REGISTERED PROFESSIONAL ENGINEER
JONATHAN ROBERSON
No. 4197
EXP. 6-30-2026
1/30/26
STRUCTURAL
STATE OF CALIFORNIA

NOT STRUCTURAL ENGINEER OR RD

BECKMAN COULTER

DxC 500i & DxC 500 AU ANALYZERS

DES.	J. ROBERSON
JOB NO.	11-2519
DATE	1/30/26

SHEET 15 OF 16 SHEETS

SEISMIC SUPPORTS & ATTACHMENTS

CONCRETE DETAIL

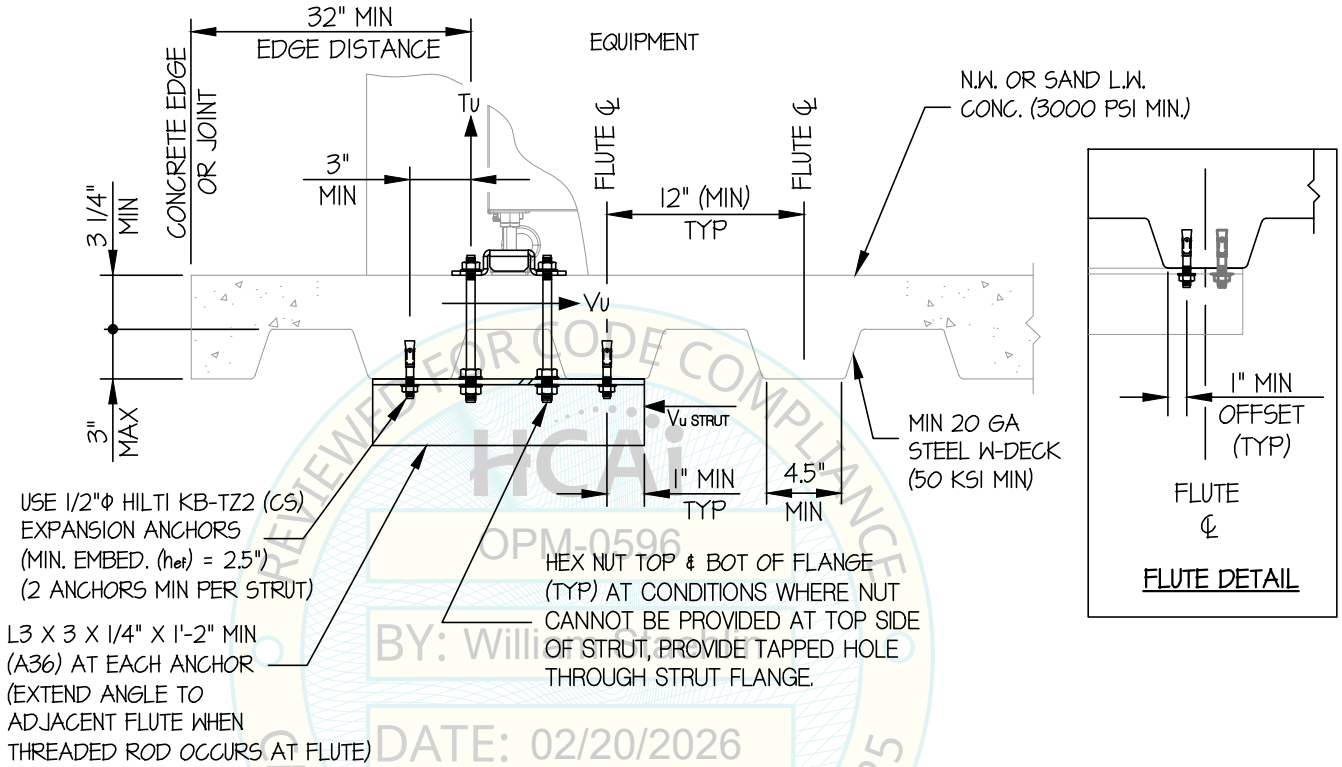

MIN STEEL DECK REQUIREMENTS AND STRUT DETAIL (A)

REVIEWED FOR CODE COMPLIANCE
HCAi
OPM-0596
BY: William Staehlin
DATE: 02/20/2026
CALIFORNIA BUILDING CODE, 2025

REGISTERED PROFESSIONAL ENGINEER
JONATHAN ROBERSON
No. 4197
EXP. 6-30-2026
1/30/26
STRUCTURAL
STATE OF CALIFORNIA

NOT STRUCTURAL ENGINEER ORDERED

EASE

EQUIPMENT ANCHORAGE & SEISMIC ENGINEERING
www.EquipmentAnchorage.com

BECKMAN COULTER

DxC 500i & DxC 500 AU ANALYZERS

DES.	J. ROBERSON
JOB NO.	11-2519
DATE	1/30/26

SHEET 16 OF 16 SHEETS

SEISMIC ANCHORAGE

BRACKET DETAILS

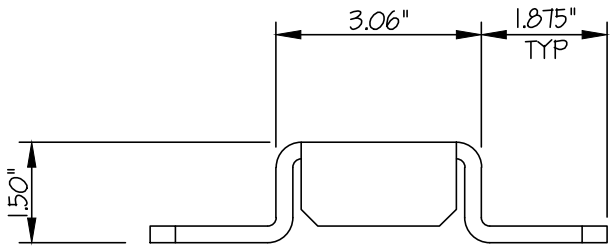

FRONT

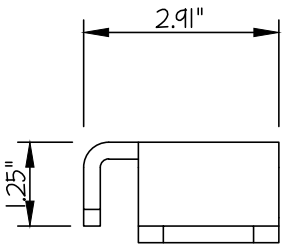

SIDE

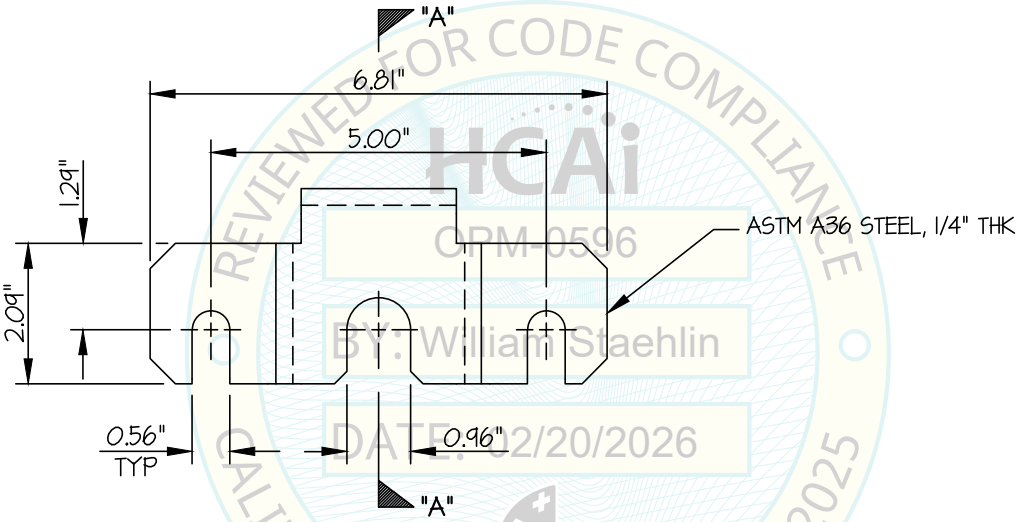

PLAN

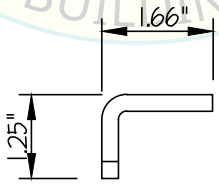

SECTION A-A

REVIEWED FOR CODE COMPLIANCE
HCAi
OPM-0596
BY: William Staehlin
DATE: 02/20/2026
CALIFORNIA BUILDING CODE, 2025

REGISTERED PROFESSIONAL ENGINEER
JONATHAN ROBERSON
No. 4197
EXP. 6-30-2026
1/30/26
STRUCTURAL
STATE OF CALIFORNIA

NOT STRUCTURAL ENGINEER OPINED