DEPARTMENT OF HEALTH CARE ACCESS AND INFORMATION
OFFICE OF STATEWIDE HOSPITAL PLANNING AND DEVELOPMENT

APPLICATION FOR HCAI PREAPPROVAL OF MANUFACTURER'S CERTIFICATION (OPM)

OFFICE USE ONLY

APPLICATION #: OPM-0709

HCAI Preapproval of Manufacturer's Certification (OPM)

Type: [X] New [ ] Renewal/Update

Manufacturer Information

Manufacturer: Gripple Inc.

Manufacturer's Technical Representative: Prasad Naik

Mailing Address: 1611 Emily Lane, Aurora, IL 60502

Telephone: (630) 952-2111 Email: p.naik@gripple.com

Product Information

Product Name: Gripple Seismic Bracing

Product Type: Nonstructural Seismic Bracing

Product Model Number: GS10, GS12, GS19, GS25

General Description: A wire rope seismic bracing assembly used to brace nonstructural components.

REVIEWED FOR CODE COMPLIANCE
HCAI
OPM-0709
BY: William Staehlin
DATE: 07/19/2025
CALIFORNIA BUILDING CODE 2022

Applicant Information

Applicant Company Name: Gripple Inc.

Contact Person: Prasad Naik

Mailing Address: 1611 Emily Lane,, Aurora, IL 60502

Telephone: (630) 952-2111 Email: p.naik@gripple.com

Title: Gripple Inc.

"A healthier California where all receive equitable, affordable, and quality health care"

STATE OF CALIFORNIA – HEALTH AND HUMAN SERVICES AGENCY

HCAi

Registered Design Professonal Preparing Engineering Recommendations

Company Name: WSP USA, INC.

Name: Mahmoud Faghihi California License Number: S5789

Mailing Address: 425 Market Street, San Francisco, CA 94105

Telephone: (415) 402-2252 Email: Mahmoud.Faghihi@WSP.COM

Certification Method

Testing in accordance with: ☐ ICC-ES AC156 ☐ FM 1950 ☐ ASHRAE 171 ☐ FEMA 461

☒ Other(s) (Please Specify): ASHRAE - 171

*Use of criteria other than those adopted by the California Building Standards Code, 2022 (CBSC 2022) for component supports and attachments are not permitted. For distribution system, interior partition wall, and suspended ceiling seismic bracings, test criteria other than those adopted in the CBSC 2022 may be used when approved by HCAI prior to testing.

☐ Analysis

☐ Experience Data

☐ Combination of Testing, Analysis, and/or Experience Data (Please Specify):

REVIEWED FOR CODE COMPLIANCE
HCAI
OPM-0709
BY: William Staehlin
DATE: 07/19/2025
CALIFORNIA BUILDING CODE 2022

HCAI Approval

Date: 7/19/2025

Name: William Staehlin Title: Senior Structural Engineer

Condition of Approval (if applicable):

GRIPPLE®

Seismic Cable Bracing

OSHPD/HCAI PREAPPROVAL OF MANUFACTURER'S CERTIFICATION (OPM)

OPM-0709

Gripple Inc
1611 Emily Lane
Aurora, IL 60502

T: +1 866 474 7753
E: grippleinc@gripple.com

Gripple Seismic Bracing System

REVIEWED FOR CODE COMPLIANCE
HCAi
OPM-0709
BY: William Staehlin
DATE: 07/19/2025
CALIFORNIA BUILDING CODE, 2022

OSHPD / HCAI PREAPPROVAL OF MANUFACTURER'S CERTIFICATION (OPM)

OPM-0709

2025-07-22

California Building Code 2022 (CBC 2022)

REGISTERED PROFESSIONAL ENGINEER
MAHMOUD DAGHIGHI
S 5789
STRUCTURAL
STATE OF CALIFORNIA

TABLE OF CONTENTS

Section 1 – General Notes and Design Example

1. General Notes/Installation Notes/Bracing Requirements ..... 1.1 – 1.9
2. Design Examples and Calculations ..... 1.10 – 1.16
3. Layout of seismic braces ..... 1.17 – 1.20
4. General Notes for Post-Installed Anchors 1.21

Section 2 – Cable Bracing System Details

1. Single Hung Pipe
   - Transverse (3” ø max) Pipe 2.1A
   - Transverse d_p ø Pipe with Clamp 2.1B
   - Transverse d_p ø Pipe Welded 2.1C
   - Transverse d_p ø Pipe with Unistrut 2.1D
   - Longitudinal d_p ø Pipe 2.2
   - 4 Way Bracing d_p ø Pipe 2.3
2. Sheet Metal Ducts
   - Trapeze Transverse Rectangular Duct 2.4
   - Trapeze Longitudinal Rectangular Duct 2.5
   - Trapeze 4 Way Rectangular Duct 2.6
   - Transverse Round Duct 2.7
   - Longitudinal Round Duct 2.8
   - 4 Way Round Duct 2.9
   - Transverse Flat or Oval Duct 2.10
   - Longitudinal Flat or Oval Duct 2.11
   - 4 Way Flat or Oval Duct 2.12
3. Hung Electrical Cable Tray/Raceway
   - Trapeze Transverse Hung Electrical 2.13
   - Trapeze Longitudinal Hung Electrical 2.14
   - Trapeze 4 Way Hung Electrical 2.15
4. Suspended Equipment Bracing
   - Trapeze 4 Way 2.16
5. Piping Supported on Trapeze

REVIEWED FOR CODE COMPLIANCE
HCAi
OPM-0709
BY: William Staehlin
DATE: 07/19/2025
CALIFORNIA BUILDING CODE, 2022

Single Tier Transverse 2.17
Single Tier Longitudinal 2.18
Single Tier 4 Way 2.19
Multi-Tier Transverse 2.20
Multi-Tier Longitudinal 2.21
6. Single Hung Conduit
Transverse Conduit 2.22
Longitudinal Conduit 2.23
7. Alternative Options
Alternative Bracing Options for Single Hung Pipe or Conduit 2.24
Alternative Bracing Options for Ducts 2.25
Alternative Bracing Options for Trapeze 2.26
Alternative Cable Tray Types 2.27
Section 3 – Structural Attachments
1. Brace Attachments to Concrete Slab/Beam/Wall ..... 3.1.1 – 3.1.4
2. Brace Attachments to Concrete Fill over Metal Deck
1 ½" Deep 3.2.1
3" Deep 3.2.2
3. Brace Attachments to Bare Metal Deck 3.3
4. Brace Attachments to Steel Beam 3.4
5. Brace Attachments to Wood Members
Thru-Bolt Perpendicular to Wood Member 3.5
Lag Screws into Wood Member 3.6
6. Brace Attachments to Post-Tensioned Slab (Cast-in-Place) 3.7
7. Brace Attachments to Open Web Joists 3.8
8. Brace Attachments to Metal Stud Framed Wall 3.9
9. Hanger Rod Attachments
Hanger Rod to Concrete Slab 3.21
Hanger Rod to Concrete Beam/Wall 3.22
Hanger Rod to Concrete Fill over Metal Deck 3.23
Hanger Rod to Bare Metal Deck 3.24
Hanger Rod to Wood Members – Thru Bolt 3.25
Hanger Rod to Wood Members – Lag Screws 3.26

REVIEWED FOR CODE COMPLIANCE
HCAi
OPM-0709
BY: William Staehlin
DATE: 07/19/2025
CALIFORNIA BUILDING CODE, 2022

Hanger Rod to Post-Tensioned Slab (Cast-in-Place) 3.27

Section 4 – Brace and Hanger Components

1. Rod Stiffener Details and Requirements 4.1
2. Gripple Seismic Fastener 4.2
3. Eyelet End Fitting 4.3
4. Standard Bracket 4.4
5. Retrofit Bracket 4.5
6. Gripple Universal Bracket ..... 4.6 – 4.7
7. Unistrut P1000 ..... 4.8

Section 5 – Design Tables Associated with Section 2

1. Brace Force Demand Tables – Tables 1.X

   Table 1.1 – Steel Pipe Schedule 40 with Water and Insulation 5.1.1

   Table 1.2 – Cast Iron Pipe with Water and Insulation 5.1.2

   Table 1.3 – PVC Pipe with Water and Insulation 5.1.3

   Table 1.4 – Copper Pipe type K only gas 5.1.4

   Table 1.5 – Conduit with Water and Insulation Duct 5.1.5

   Table 1.6 – Round, Oval, or Rectangular Duct 5.1.6

   Table 1.7 – Trapeze or Cable Tray 5.1.7

   Table 1.8 – Single Hung Conduit 5.1.8

2. Bracing Attachment Designation Tables – Tables 2.X

   Table 2.1 – Steel Pipe Schedule 40 with Water and Insulation 5.2.1

   Table 2.2 – Cast Iron Pipe with Water and Insulation 5.2.2

   Table 2.3 – PVC Pipe with Water and Insulation 5.2.3

   Table 2.4 – Copper Pipe type K only gas 5.2.4

   Table 2.5 – Conduit with Water and Insulation Duct 5.2.5

   Table 2.6 – Round, Oval, or Rectangular Duct 5.2.6

   Table 2.7 – Trapeze or Cable Tray 5.2.7

   Table 2.8 – Single Hung Conduit 5.2.8

3. Compression Rod Demand Tables – Tables 3.X

   Table 3.1 – Steel Pipe Schedule 40 with Water and Insulation 5.3.1

   Table 3.2 – Cast Iron Pipe with Water and Insulation 5.3.2

   Table 3.3 – PVC Pipe with Water and Insulation 5.3.3

   Table 3.4 – Copper Pipe type K only gas 5.3.4

REVIEWED FOR CODE COMPLIANCE
HCAI
OPM-0709
BY: William Staehlin
DATE: 07/19/2025
CALIFORNIA BUILDING CODE, 2022

Table 3.5 – Conduit with Water and Insulation Duct 5.3.5
Table 3.6 – Round, Oval, or Rectangular Duct 5.3.6
Table 3.7 – Trapeze or Cable Tray 5.3.7
Table 3.8 – Single Hung Conduit 5.3.8

4. Compression Rod Attachment Tables – Tables 4.X

Table 4.1 – Steel Pipe Schedule 40 with Water and Insulation 5.4.1
Table 4.2 – Cast Iron Pipe with Water and Insulation 5.4.2
Table 4.3 – PVC Pipe with Water and Insulation 5.4.3
Table 4.4 – Copper Pipe type K only gas 5.4.4
Table 4.5 – Conduit with Water and Insulation Duct 5.4.5
Table 4.6 – Round, Oval, or Rectangular Duct 5.4.6
Table 4.7 – Trapeze or Cable Tray 5.4.7
Table 4.8 – Single Hung Conduit 5.4.8

REVIEWED FOR CODE COMPLIANCE
HCAi
OPM-0709
BY: William Staehlin
DATE: 07/19/2025
CALIFORNIA BUILDING CODE, 2022

Section 1 - General Notes and Design Example

REVIEWED FOR CODE COMPLIANCE
HCAi
OPM-0709
BY: William Staehlin
DATE: 07/19/2025
CALIFORNIA BUILDING CODE, 2022

GRIPPLE, INC.
1611 Emily Lane
Aurora, IL 60502
(901) 417-3048
www.gripple.com

GRIPPLE SEISMIC BRACING SYSTEMS
CSI Section:
05 15 00 Wire Rope Assemblies

1.0 APPLICABLE CODES AND STANDARDS

Gripple Seismic Bracing Systems recognized in this OPM (OSHPD Preapproval of Manufacturer's Certification) have been evaluated for use in tension only, seismic cable restraints for nonstructural components and systems. The structural performance properties of the Gripple Seismic Bracing Systems comply with the intent of the provisions of the following codes and regulations:

- 2022 California Building Code (CBC)
- ASCE 19/SEI 19-16: Structural Applications of Steel Cables for Buildings.
- ASCE/SEI 7-16, with Supplement 3

2.0 LIMITATIONS

Use of the Gripple Seismic Bracing Systems recognized in this OPM is subject to the following limitations:

2.1 The Gripple Seismic Bracing Systems shall be installed in accordance with the applicable code, the manufacturer’s published installation instructions, and this OPM. Where there is a conflict, the more restrictive requirements shall govern.

2.2 The use of seismic cable restraints for resisting loads other than earthquake-induced loads is beyond the scope of this report.

2.3 Use of seismic cable restraints where ambient temperatures exceed 200°F (93°C) as set forth in Section E3.3.1.1 of ASCE/SEI 19 is beyond the scope of this report, unless design for such conditions is addressed. In accordance with Section 2.5 of ASCE/SEI 7, design for exposure to extraordinary events need not be considered.

2.4 Use in areas where weather protection is not provided and areas where a corrosive atmosphere exists is beyond the scope of this report.

2.5 Special inspections for the installation of the seismic cable restraints shall be provided in accordance with Section 3.4 of this report.

2.6 The Gripple Seismic Bracing Systems recognized in this report are produced by Gripple, Inc. in Aurora, IL.

3.0 PRODUCT USE

3.1 General: The Gripple Seismic Bracing Systems are used in seismic bracing cable restraints as the support of non-structural components for resisting tensile earthquake- induced loads only.

3.2 Design: The design of Gripple Seismic Bracing Systems shall comply with Sections 903A, 1603A, and 1613A of the CBC, Section 903 of the CFC, Chapter 13 of ASCE/SEI 7 as amended by Section 1617A, 2022 CBC. Appendix E of ASCE/SEI 19, and for support of fire protection sprinkler systems, Section 18.5 of NFPA 13-2022.

3.3 Installation: Installation of the Gripple Seismic Bracing Systems shall be in accordance with the applicable code, the manufacturer's published installation instructions, and per IAPMO UES-ER 577. A copy of this evaluation report shall be available on the job site for quality control purposes during construction.

3.3.1 The following installation parameters are required for the Gripple Seismic Bracing System.:

3.3.1.1 The Gripple Seismic Cable Bracing Systems are confined with the component combinations as described in Table 1 on page 1.5 and in Section 4 of this OPM.

3.3.1.2 The Gripple Seismic Cable Brace Kit is installed at an angle to the horizontal between 30 and 60 degrees, with 45 degrees being the ideal orientation to coincide with the 45- degree angle of the eyelet and bracket fittings.

3.3.1.3 The Gripple Seismic Cable Bracing System shall be attached to the nonstructural component with either the Standard Gripple Seismic Eyelet (GSE), Gripple Seismic Standard (GSS) bracket, or Gripple Seismic Retrofit (GSR) bracket. Installing the cable system via looping through the trapeze support strut holes is not allowed.

3.3.1.4 The Gripple Seismic Cable Bracing System may be anchored to the structural system with anchors compliant with an approved evaluation report, or compliance with the applicable building codes and designed by the Registered Design Professional addressing the nonstructural component, through the GSE or GSS and GSR Brackets, or looped around a structural member (i.e., bar joist or structural beam, etc.) and fastened with a Gripple Seismic (GS) Fastener. The seismic load effects shall include overstrength in accordance with ASCE/SEI 7-16 with Supplement 3.

3.3.1.5 The tail of the cable shall extend a minimum of 2 inches (51 mm) beyond the GS fastener. This is to account for the small displacement the cable experiences when loaded as it seats against the internal mechanism of the GS fastener, as well as to accommodate any future adjustment.

3.3.1.6 Nuts and washers are required at all bracket connections that are at the structure or to the component. Standard round washers shall be installed at all the bracket attachments.

3.3.2 Figures 1-4 of this Section and the details in Section 4 provide additional installation info.

3.4 Special Inspection: Periodic Special Inspections for the installation of all seismic cable restraints used for seismic resistance shall comply with the applicable requirements in Sections 1705A.1 and 1705A.13.6 of the CBC. Certificates of compliance for the seismic qualification shall be submitted to the building official as specified in Sections 1704A.5 and 1705A.13 of the CBC.

4.0 PRODUCT DESCRIPTION

4.1 General: The Gripple Seismic Bracing System is comprised of tension-only seismic restraints made from steel wire ropes or cables and fittings, as permitted by Appendix E of ASCE/SEI 19. The Gripple Seismic Cable Bracing Systems described in this report are available in four different component combinations.

4.1.1 GS10: The GS10 Gripple Seismic Cable Kit consists of a device constructed from 5/64 -inch (1.9 mm) diameter cable and GS10 fastener sized to match the 5/64 -inch (1.9 mm) diameter cable. The cables are available in lengths of 10 feet (3.05 m), 15 feet (4.6 m), and 20 feet (6.1 m). The design strength of the kit is provided in Table 1 of this report. The cable is attached to the structure using either a GSE4 Eyelet for ⅜-inch (10 mm) rods or anchors, or GSS4 & GSS5 Standard Brackets. Nuts and washers are required at bracket connection.

The cable is attached to the equipment or struts using either a GSE4 Eyelet for ⅜-inch (10 mm) rods or anchors, or GSS4 & GSS5 Standard Brackets (or GSR4 & GSR5 Retrofit Brackets). Nuts and washers are required at bracket connection.

A pre-assembled colored tag shall be included as described in Section 4.2.6 of this report. Figure 1 of this section illustrates the GS10 Gripple Seismic Cable Kit.

4.1.2 GS12: The GS12 Gripple Seismic Cable Kit consists of a device constructed from ⅛-inch (3.2 mm) diameter cable and GS12 fasteners sized to match the ⅛-inch (3.2 mm) diameter cable. The cables are available in lengths of 10 feet (3.05 m), 15 feet (4.6 m), and 20 feet (6.1 m). The design strength of the kit is provided in Table 1 of this report.

The cable is attached to the structure using a GSE4 Eyelet for
⅜-inch (10 mm) rod or anchors, or GSS4 & GSS5 Standard Brackets. Nuts and washers are required at bracket connection.

The cable is attached to the equipment or struts using either a GSE4 Eyelet for ⅜-inch (10 mm) rods or anchors, or GSS4 & GSS5 Standard Brackets (or GSR4 & GSR5 Retrofit Bracket). Nuts and washers are required at bracket connection.

A pre-assembled colored tag shall be included as described in Section 4.2.6 of this report. Figure 1 of this section illustrates the GS12 Gripple Seismic Cable Kit.

4.1.3 GS19: The GS19 Gripple Seismic Cable Kit consists of a device constructed from 3/16-inch (4.8 mm) diameter cable and GS19 fastener sized to match the 3/16-inch (4.8 mm) diameter cable. The cables are available in lengths of 10 feet (3.05 m), 15 feet (4.6 m), and 20 feet (6.1 m). The design strength of the kit is provided in Table 1 of this report. The cable is attached to the structure using GSS4, GSS5, GSS6, GSS8 Standard Brackets. Nuts and washers are required at bracket connection.
The cable is attached to equipment or strut using either GSS4, GSS5, GSS6, GSS8 Standard Brackets (or GSR4, GSR5, GSR6, and GSR8 Retrofit Brackets). Nuts and washers are required at the bracket connection.

A pre-assembled colored tag shall be included as described in Section 4.2.6 of this report. Figure 1 of this section illustrates the GS19 Gripple Seismic Cable Kit.

4.1.4 GS25: The GS25 Gripple Seismic Cable Kit consists of a device constructed from ¼-inch (6.4 mm) diameter cable and GS25 fastener sized to match the ¼-inch (6.4 mm) diameter cable. The cables are available in lengths of 10 feet (3.05 m), 15 feet (4.6 m), and 20 feet (6.1 m). The design strength of the kit is provided in Table 1 of this report. The cable is attached to the structure using double-stacked GSS6, GSS8, GSS10 Standard Brackets. Nuts and washers are required at bracket connection.

The cable is attached to the equipment or strut using either double-stacked GSS6, GSS8, GSS10 Standard Brackets (or double-stacked GSR6, GSR8, and GSR10 Retrofit Brackets). Nuts and washers are required at bracket connection.

A pre-assembled colored tag shall be included as described in Section 4.2.6 of this report. Figure 1 of this section illustrates the GS25 Gripple Seismic Cable Kit.

4.2 MATERIALS

4.2.1 Cable: Steel cable and wire rope have steel cores that conform with Table 7 of ASTM A1023 or EN12385-4 and all applicable requirements in Appendix E of ASCE 19. Wire shall be galvanized in accordance with ASTM A1007 or EN- 10244-2.

4.2.2 End Fittings and Intermediate Fittings: Fittings and cable assemblies were tested in accordance with Section 5.3 of IAPMO UES EC-037. End fittings are composed of either Gripple Seismic Eyelets (GSE) or Gripple Seismic Standard (GSS) Brackets.

4.2.2.1 The Gripple Seismic Eyelets (GSE) Bracket Fitting: The GSE bracket fitting is formed from mild steel that has zinc electrodeposited complying with ASTM B633 SC1.
See page 4.3 for dimensions and illustration details.

4.2.2.2 The Gripple Seismic Standard (GSS) Bracket Fitting: The GSS bracket fitting is pre-attached to cable via a zinc-plated copper ferrule and conforms to AISI 1050 steel minimum UTS 725 MPA. See page 4.4 for dimensions and illustration details.

4.2.3 Standard Loose Brackets: The standard brackets are formed from mild steel that has zinc electrodeposited complying with ASTM B633 SC1. See page 4.4 for dimensions and illustration details.

4.2.4 Retrofit Loose Brackets: The retrofit brackets are formed from mild steel that has zinc electrodeposited complying with ASTM B633 SC1. See page 4.5 for dimensions and illustration details.

4.2.5 Seismic Fasteners: The seismic fasteners are made from Type ZA2 zinc alloy. See page 4.2 for dimensions and illustration details.

4.2.6 Color-Coded Tags: The color-coded tags are pre- assembled for attaching to each length of the cable and field verification of cable diameter: GS10=Red; GS12=Green; GS19=Yellow and GS25 = Purple. Figure 2 on page 1.7 for an illustration detail.

4.2.7 Bolts/Rods: At a minimum, bolts shall comply with ASTM A307, and rods shall comply with ASTM F1554 steel. Bolt or rod diameters are specified in Table 1 of this report. Tightening torque shall be per table below.

MINIMUM TIGHTENING TORQUE
FOR ASTM A307 BOLTS

Bolt Size (in.)	Tightening Torque (ft lbs)
1/4	4
3/8	15
1/2	37
5/8	73
3/4	130

TABLE 1 – Gripple Seismic Cable Bracing System						
Gripple Seismic Kit	Cable Orientation[1]	Gripple Seismic Bracket	Bolt/Rod/ Structural Attachment Diameter Size (inch)[3,4]	Minimum Washer Requirements	ASD (lbs.)[5, 6]	LRFD (lbs.)[5, 6]
GS10	30-60 degrees	GSE4	⅜	Standard	270	400
		GSS4	⅜	Standard		
		GSS5	½	Standard		
		GSR4	⅜	Standard		
		GSR5	½	Standard		
GS 12	30-60 degrees	GSE4	⅜	Standard	630	945
		GSS4	⅜	Standard		
		GSS5	½	Standard		
		GSR4	⅜	Standard		
		GSR5	½	Standard		
GS19	30-60 degrees	GSS4	⅜	Standard	1,515	2,265
		GSS5	½	Standard		
		GSS6	⅝	Standard		
		GSS8	¾	Standard		
		GSR4	⅜	Standard		
		GSR5	½	Standard		
		GSR6	⅝	Standard		
		GSR8	¾	Standard		
GS25	30-60 Degrees	GSS6	⅝	Standard	2,390	3,570
		GSS8	¾	Standard		
		GSS10	1	Standard		
		GSR6	⅝	Standard		
		GSR8	¾	Standard		
		GSR10	1	Standard		

For SI: 1 inch = 25.4 mm, 1lbf=4.45 N

1 Orientation is the brace angle, as measured from the horizontal. Permitted installation angle for the Gripple Seismic Brace System ranges from 30° to 60°.
2 Seismic brackets are named using the following conventions: E=eyelet, S=standard bracket, R=retrofit bracket.
3 Capacity of the vertical rod or component attachment shall be designed by the applicable nonstructural component registered design professional.
4 Capacity of the structural attachment may be used with anchors compliant with an approved evaluation report, or compliance with the applicable building codes and shall be designed by the applicable nonstructural component registered design professional.
5 The Gripple Seismic Bracing System for allowable stress design (ASD) or load resistance factor design (LRFD) represent the lowest capacity based on established deformation and force requirements for all Gripple Seismic components (cable, brackets, fittings, and fasteners) based on testing in accordance with Sections 5.3 and 5.4 of EC 037.
6 The Gripple Seismic Bracing System capacity for allowable stress design (ASD) or load resistance factor design (LRFD) are to be used with the seismic demands using the applicable code provisions of OSHPD/HCAI, CBC, and ASCE/SEI 7.

GRIPPLE®
Gripple Inc
1611 Emily Lane
Aurora, IL 60502
T: +1 866 474 7753
E: grippleinc@gripple.com

Mahmoud Faghihi, PE, SE
California SE No. S5789

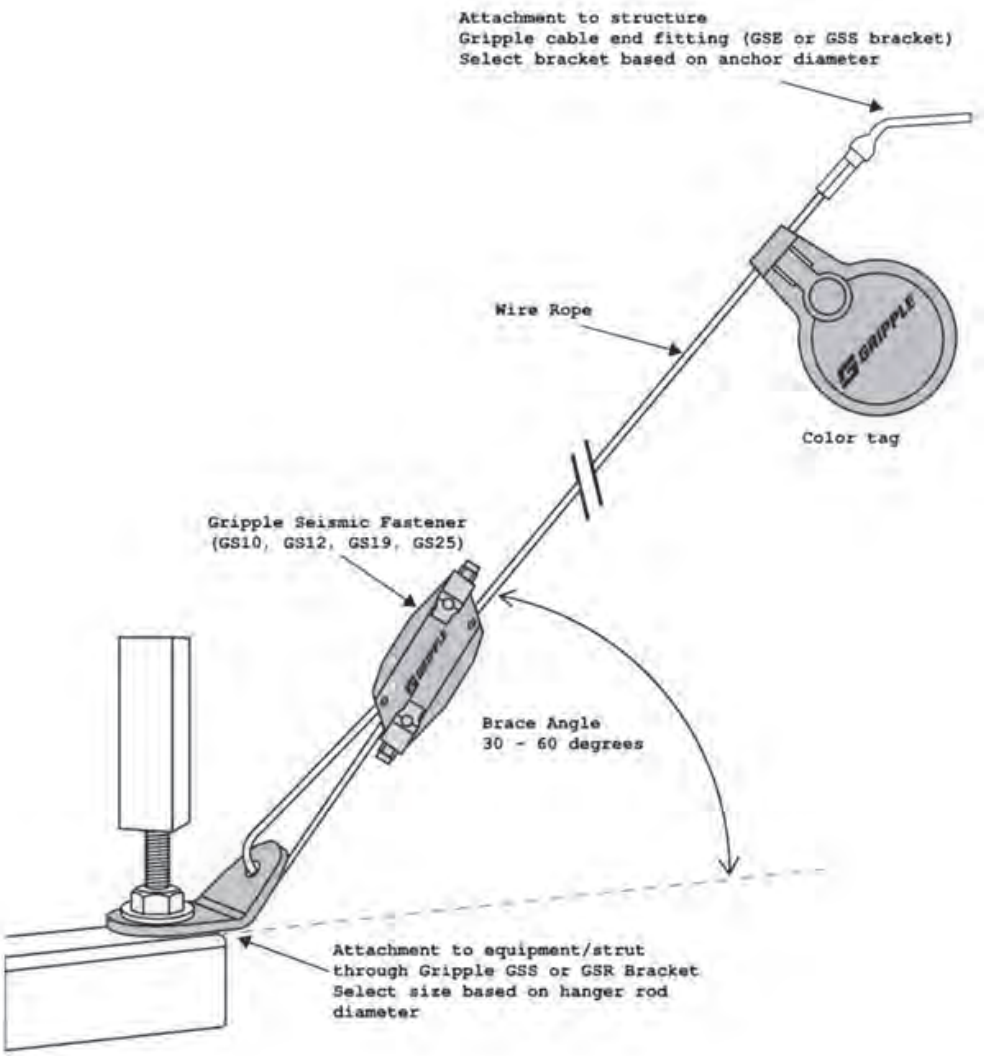

Figure 1: Gripple Seismic Kit Typical Installation

Gripple Inc
1611 Emily Lane
Aurora, IL 60502

T: +1 866 474 7753
E: grippleinc@gripple.com

Mahmoud Faghihi, PE, SE
California SE No. S5789

PAGE NUMBER: 1.6

DATE 7/11/2025

Kit	GS10	GS12	GS19	GS25
Tag Color	Red	Green	Yellow	Purple
Design Strength (LRFD*)	400 lbf	945 lbf	2,265 lbf	3,570 lbf

Figure 2: Color-Coded Tag Detail

GRIPPLE®

Gripple Inc
1611 Emily Lane
Aurora, IL 60502

T: +1 866 474 7753
E: grippleinc@gripple.com

Mahmoud Faghihi, PE, SE
California SE No. S5789

PAGE NUMBER: 1.7

DATE 7/11/2025

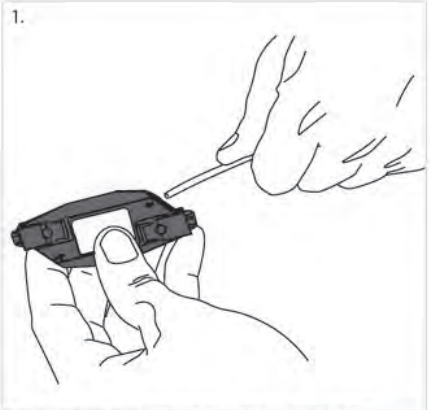

1. Thread the tail end of the cable through the first channel of the Gripple Seismic Fastener.

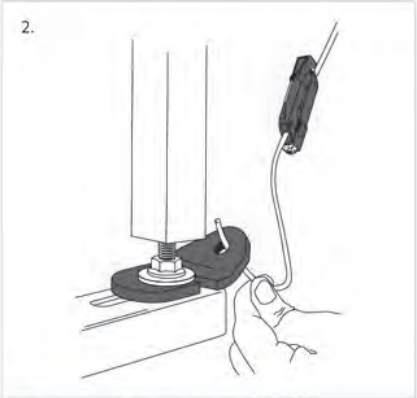

Thread the cable through the hole of the Gripple Seismic Bracket

Thread the cable back through the second channel of the Gripple Fastener. A 2" tail is recommended for any future adjustments. Hand-tighten cables to remove all slack. For spring isolated equipment, leave 1/8" visible sag in the cable.

Figure 3: Gripple Seismic Fastener Installation Details

GRIPPLE®

Gripple Inc
1611 Emily Lane
Aurora, IL 60502

T: +1 866 474 7753
E: grippleinc@gripple.com

Mahmoud Faghihi, PE, SE
California SE No. S5789

PAGE NUMBER: 1.8

DATE 7/11/2025

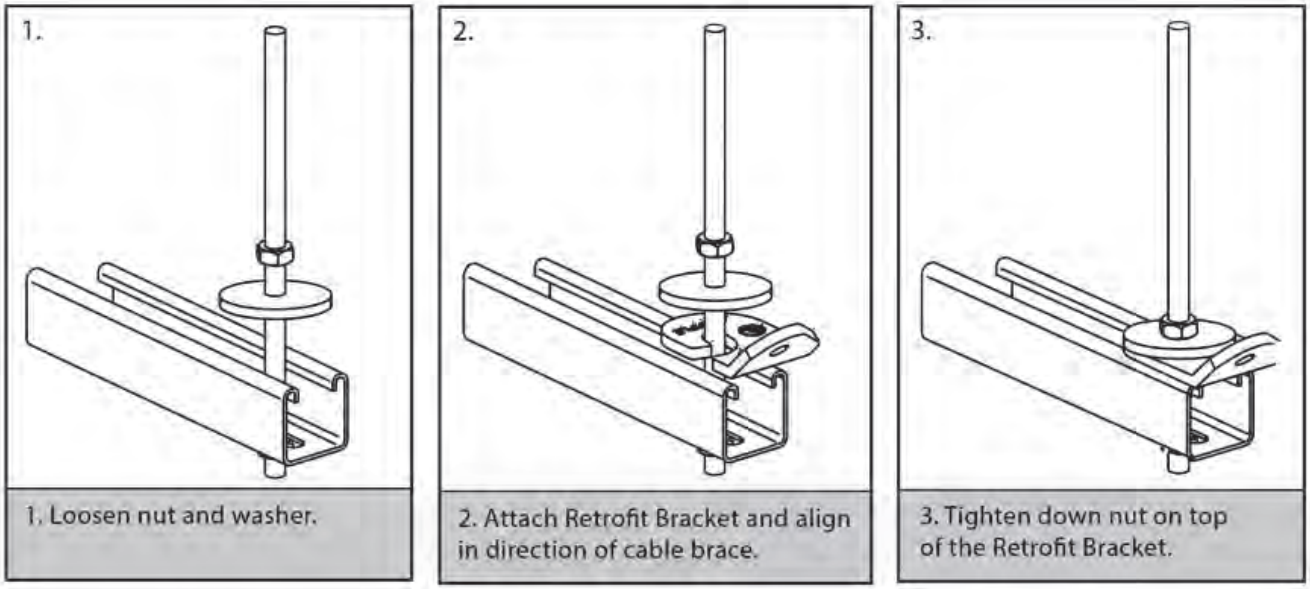

Figure 4: Gripple Seismic Retrofit Bracket (GSR) Installation

Gripple Inc
1611 Emily Lane
Aurora, IL 60502

T: +1 866 474 7753
E: grippleinc@gripple.com

Mahmoud Faghihi, PE, SE
California SE No. S5789

PAGE NUMBER: 1.9

DATE 7/11/2025

Using the OPM for Gripple Seismic Bracing Kit

Step 1: Determine z/h and S_{DS} for project location and select bracing angle.

Step 2: Using the Tables 1.X in Section 5, Determine brace force demand, T_{cable}. Round up for intermediate values of z/h and S_{DS}.

Step 3: Select Gripple Seismic Bracing Kit with a load rating greater than T_{cable}. (Tables in Section 5 are color coded based on load ratings.)

Step 4: Use selected Gripple Seismic Bracing Kit with referenced detail in section 2.

Step 5: Using the Tables 2.X in Section 5, determine Bracing Attachment Designation. Using this and the building structural material, find the corresponding attachment information in the details and Tables in Section 3

Step 6: Using the Tables 3.X in Section 5, Determine the compression rod force demand, F_C. Round up for intermediate values of z/h and S_{DS}.

Step 7: Use the key in Tables 3.X to determine the hanger rod diameter and rod stiffener spacing. Refer to Detail 4.1 for rod stiffener construction.

Step 8: Using the Tables 4.X in Section 5, determine Rod Attachment Designation. Using this and the building structural material, find the corresponding attachment information in the details and Tables in Section 3.

Example: Suspended Pipe Bracing

Step 1: 1 1/4" diameter steel pipe hung from 3rd floor of a 4 story hospital building (z/h = 0.75) located where S_{DS}=1.5. Braces at 45 degrees.

Step 2: Using Table 1.1B, we determine brace spacing at 80ft on center and brace force demand to be 382 lbs.

Step 3: We select GS10 Gripple Seismic Bracing Kit.

Step 4: Per the table, we reference details on pages 2.1, 2.1, or 2.3 for transverse, longitudinal, or 4 way braces.

Step 5: Using Table 2.1B, we determine Bracing Attachment Designation to be B3. This brace will be anchored to the underside of a concrete slab. Per Table 3.1 and detail 3.1, we will use 1/2" diameter Hilti KB-TZ2 with 2 1/2" nominal embed.

Step 6: Using Table 3.1B, we determine the compression rod force demand to be 356 lbs.

Step 7: Per the key in Table 3.1, we will use a 3/8" diameter hanger rod with a spacing of 14" for the rod stiffeners. We refer to detail 4.1 for this construction.

Step 8: Using Table 4.1B, we determine Rod Attachment Designation to be R2. This rod will be attached to the underside of a concrete slab. Per table 3.21A and detail 3.21, we will round up to the anchor for R3: 3/8" diameter Hilti KB-TZ2 with 2 1/2" nominal embed.

HCAi
OPM-0
William S
DATE: 07/19/2025
BUILDING CO

DUCTWORK DESIGN STEPS

Follow the steps below to determine the Gripple seismic kit installation, and brace connection details that pertain to a specific suspended duct system. An example is provided on the following pages.

STEP 1. Determine 'g' Forces:
Calculate the lateral seismic force, F_p, and vertical seismic force, F_v, in terms of 'g' using the equations for each level of the building.

STEP 2. Determine Operating Weight (lbs/ft):
Determine the operating weight, W_p, of the distribution system (lbs/ft) to be braced.

STEP 3. Determine Seismic Forces (lbs):
Determine the brace spacings. If you choose to use the pre-designed schedules in Section 5, skip the remainder of this step. Calculate the maximum lateral and vertical forces applied to the seismic brace system. Compute the maximum tension in the brace, T_{cable}, compression in the hanger, F_c, and attachment forces $F_{attachment}$.

STEP 4. Select Seismic Kit Installation, Hanger rod and Brace Connection Details:
Select the appropriate details from the schedules in Section 2 for rectangular duct based on maximum 'g' force, system weight per foot and maximum transverse, longitudinal and all directional brace spacing.

If you calculated the seismic forces in step 3, verify the details selected are correct by comparing the calculated lateral force, F_p, and load on the compression hanger rod, F_c , with the rated loads tabulated on the detail sheets. If F_p and F_c, are less than or equal to the tabulated rated loads, the details are acceptable.

NOTE: Design steps and example are also applicable for pipes and conduits, however the design weights should be adjusted accordingly. Design tables are provided in section 5.

GRIPPLE®

Gripple Inc
1611 Emily Lane
Aurora, IL 60502

T: +1 866 474 7753
E: grippleinc@gripple.com

Mahmoud Faghihi, PE, SE
California SE No. S5789

DUCTWORK DESIGN EXAMPLE

A 30"x40" rectangular duct 18-gauge material, constructed in accordance with SMACNA standards, is installed on a four-story concrete building. The duct is supported every 10 feet. Each floor has a height of 15 feet. According to the structural drawings, the short-period spectral acceleration (S_{DS}) is 1.5, and the component importance factor (I_p) is 1.5.

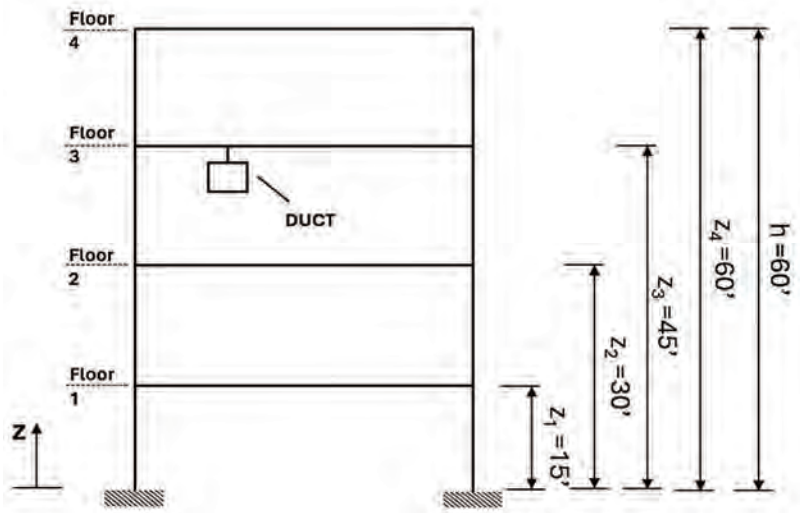

Note: The allowable loads for anchoring to concrete have been adjusted by applying the concrete overstrength factor, Ω_o, where applicable.

GRIPPLE®

Gripple Inc
1611 Emily Lane
Aurora, IL 60502

T: +1 866 474 7753
E: grippleinc@gripple.com

Mahmoud Faghihi, PE, SE
California SE No. S5789

STEP 1. Determine 'g' Forces:

The component amplification and response modification factors for suspended ductwork that is assembled using methods other than welding or brazing are as follows:

where:

Component amplification factor, $a_p = 2.5$	(ASCE 7-16, Table 13.6-1)
Component modification factor, $R_p = 6.0$	(ASCE 7-16, Table 13.6-1)
Overstrength factor, $\Omega_0 = 2$	(ASCE 7-16, Table 13.6-1)
Spectral acceleration, $S_{DS} = 1.5$	
Importance factor, $I_p = 1.5$	(ASCE 7-16, Sec. 13.1-3)
Height to attachment, z = 45 feet	
height of building, h = 60 feet	

$$F_p = \frac{0.4 a_p S_{DS} W_p}{\frac{R_p}{I_p}}\left(1 + 2\frac{z}{h}\right)$$ (ASCE 7-16, eq. 13.3-1)

$$F_p, \max = 1.6 S_{DS} I_p W_p$$ (ASCE 7-16, eq. 13.3-2)

$$F_p, \min = 0.3 S_{DS} I_p W_p$$ (ASCE 7-16, eq. 13.3-3)

$$F_v = 0.2 S_{DS} W_p$$ (ASCE 7-16, 13.3.1.2)

Thus,

$$F_p = \frac{0.4\ (2.5)\ (1.5)(W_p)}{\frac{6}{1.5}}\left(1 + 2\frac{z}{60}\right) = 0.375 W_p\left(1 + 2\frac{z}{h}\right)$$

$$F_p, \max = 1.6(1.5)(1.5)W_p = 3.6\ W_p$$

$$F_p, \min = 0.3(1.5)(1.5)W_p = 0.675\ W_p$$

$$F_p = 0.375 W_p\left(1 + 2\frac{z}{h}\right)$$

$$F_v = 0.30 W_p$$

The values of F_p and F_v are shown in the Table below.

Floor	z/h	F_p	F_v
1	0.25	0.68 g	0.30 g
2	0.5	0.75 g	0.30 g
3	0.75	0.94 g	0.30 g
4	1	1.13 g	0.30 g

STEP 2. Determine Operating Weight (lbs/ft):

The operating weight of a 30”x40”x18 gauge rectangular ductwork is 30 lbs/ft.

STEP 3. Determine Seismic Forces (lbs):

The transversal and longitudinal brace spacing for suspended ductwork is 20ft and 40ft. Therefore, for level 3:

$$F_{p,tranv} = 0.938\left(\frac{30\text{lb}}{\text{ft}}\right)(20\text{ ft}) = 563\text{lbs}$$

$$F_{p,long} = 0.938\left(\frac{30\text{lb}}{\text{ft}}\right)(40\text{ ft}) = 1126\text{lbs}$$

$$F_v = 0.30\left(\frac{30\text{lb}}{\text{ft}}\right)(10\text{ ft}) = 90\text{lbs}$$

For a bracing angle of $\theta = 45°$

$$T_{cable} = \frac{F_p W_p}{\cos\theta}$$

$$T_{cable} = \frac{563\text{lbs}}{\cos 45} = 795\text{ lbs}$$

This equation was used to calculate T_{cable} in Table 1.6B in Section 5.

The design tables for attachments were based on ranges of tension forces on the cable from 100lbs to 2000lbs. In this example, the demand of 795lbs is within the 600 (B3) to 900 (B4) range, so the attachment was designed for 900lbs (B4).

Key	
T_{cable} Max	
(lbs)	
100	B1
300	B2
600	B3
→ 900	B4
1200	B5
1500	B6
2000	B7

For Brace attachments,

$$\Omega_0\, T_{cable} = 2\,(900lbs) = 1800\ lbs$$

This equation was used to calculate bracing attachments in Table 2.6B in Section 5.

NOTE: Attachments were designed to the maximum shear and tension force that could result from the brace. In this case, we determined that the shear and tension forces for each brace angle and designed the anchorage for worst case. See table below:

T_{cable}	Brace Force	Concrete anchor demands at varying brace angles					
		30 °		45 °		60 °	
		V_u=F_x (cos)	T_u=F_y (sin)	V_u=F_x (cos)	T_u=F_y (sin)	V_u=F_x (cos)	T_u=F_y (sin)
900 lbs	1800 lbs	1559 lbs	900 lbs	1273 lbs	1273 lbs	1559 lbs	900 lbs

For the hanger rod in compression with stiffener,

$$F_c = F_p W_p \tan\theta + 0.2 S_{DS} W_p$$

This equation was used to calculate F_c in Table 3.6B in Section 5.

$$F_c = (563\text{ lbs})\tan(45^\circ) + 0.2\,(1.5)(600\text{lbs}) = 743\text{lbs}$$

For the hanger rod attachment

$$T_a = \text{MAX}\begin{cases}(1.2 + 0.2S_{DS})W_p - F_p W_p tan\theta \\ 1.2W_p\end{cases}$$

This equation was used to calculate hanger rod attachments in tension in Table 4.6B in Section 5.

$$F_{\text{rod attachment,x}} = F_{\text{rod attachment,y}} = 1.2\,(600\ lbs) = 720\ lbs$$

Hence, for floor 1,2 and 4:

Floor	T_{cable} (lbs)	F_c (lbs)	$F_{attachment}$ (lbs)	$F_{rod\ attachment}$ (lbs)
1	573	585	1559	720
2	636	630	1559	720
3	795	743	1559	720
4	955	855	2078	720

NOTE: Values T_{cable} and F_c values can be found in design tables section 5, subsection 5.1.6 and 5.3.6. Duct details are available in section 2.

STEP 4. Select Seismic Kit Installation, Hanger and Brace Connection Details:

For rectangular duct weighting 30 lbs/ft, acceptable seismic kit installation, hanger rod and attachment detail from the charts in Section 3 for each level of the building are as tabulated below.

Floor	F_p	Spacing (ft)	Gripple Kit	Brace Attachment	Hanger Rod ø (in)	Rod Attachment
1	0.68 g	20	GS12	B3	1/2	R3
2	0.75 g	20	GS12	B4	1/2	R3
3	0.94 g	20	GS12	B4	5/8	R3
4	1.13 g	20	GS19	B5	5/8	R3

NOTE: Brace attachments and compression rod attachment details can be found in Section 3.

The procedure laid out in the above example shall be exactly followed for other MEP systems with the following changes.

Piping:

1. W_p = Select operating weight of the pipe with its contents if the pipe is carrying liquids. If the pipes are designed to carry gases, then only pipe weight shall be considered.
2. a_p = Select a_P that is appropriate to the piping being seismically braced from ASCE 7-16, Table 13.6-1
3. R_p = Select R_p that is appropriate to the piping being seismically braced from ASCE 7-16, Table 13.6-1

Electrical distribution systems (conduits, cable trays, bus ducts etc.):

1. W_p = Select weight of the electrical distribution systems with their contents.
2. a_p = Select a_p that is appropriate to the electrical distribution system being seismically braced from ASCE 7-16, Table 13.6-1
3. R_p = Select Rp that is appropriate to the electrical distribution system being seismically braced from ASCE 7-16, Table 13.6-1

LAYOUT OF SEISMIC BRACES

Gripple Seismic Bracing must be installed on the vertical support system comprised of threaded rod (all-thread rod) hanger suspensions, or directly to a suspended individual equipment component.

Seismic bracing shall be designed in accordance with:
- the guidelines contained in this manual
- the applicable building code or local city/county code requirements for seismic design
- the engineering drawings and specifications of the specific project requirements

Component hanger spacing will typically be less than the required spacing of the seismic braces.

Typical maximum allowable brace spacing limits

The maximum allowable brace spacing for piping/conduit/ductwork constructed of ductile materials (e.g. steel, copper, aluminum) are typically:
- 40ft for transverse bracing (piping larger than 2½" dia, general conduit and ductwork)
- 80ft for longitudinal bracing (piping larger than 2½", general conduit and ductwork)
- 30ft for transverse bracing (piping smaller than 2½" dia)
- 60ft for longitudinal bracing (piping smaller than 2½" dia)

The maximum allowable brace spacing limits for piping/conduit/ductwork constructed of non-ductile materials (e.g. cast iron, plastic) are typically:
- 20ft for transverse bracing
- 40ft for longitudinal bracing

The brace spacing could be considerably less than the maximum spacing for a specific run, depending on the seismic demand loads, the size and load capacity of the cable brace system used, and the strength of the structural members/components and structural anchors which resist the resulting seismic brace forces.

Reduced spacing may also be required to prevent:
- collisions between the piping/conduit/ductwork/equipment and other non-structural components.
- rupture/shearing/slippage of flexible joints between piping/conduit/ductwork and floor/ceiling mounted equipment.

Brace size and spacing should not vary considerably along a run to ensure uniform deflection of the piping/conduit/ductwork and uniform loading of the individual braces during a seismic event.

1.

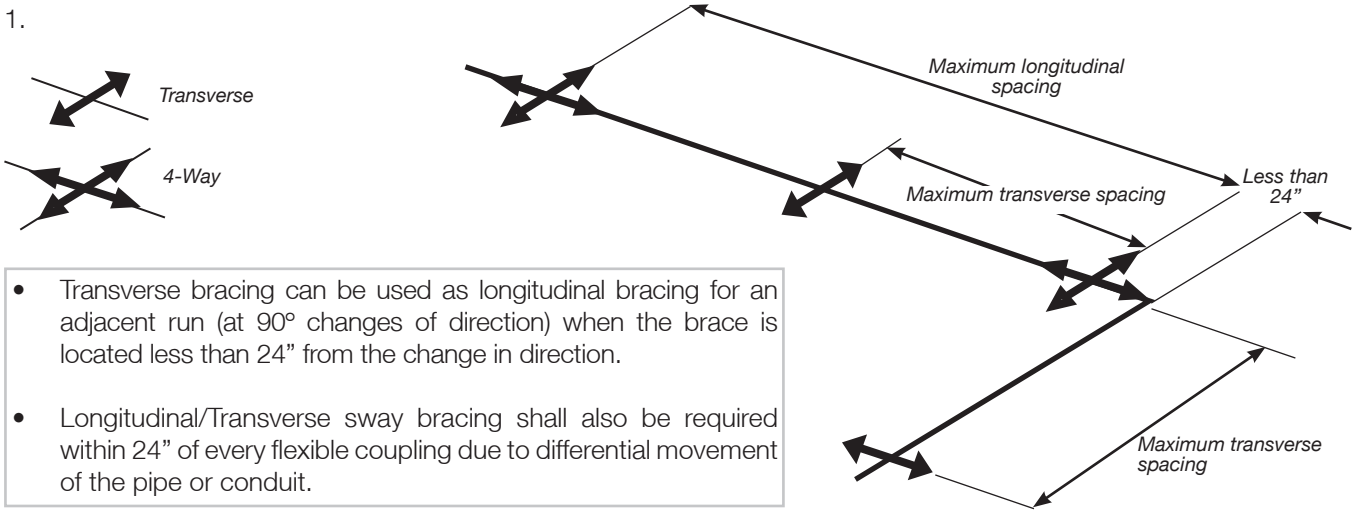

- Transverse bracing can be used as longitudinal bracing for an adjacent run (at 90º changes of direction) when the brace is located less than 24" from the change in direction.
- Longitudinal/Transverse sway bracing shall also be required within 24" of every flexible coupling due to differential movement of the pipe or conduit.

GRIPPLE®

Gripple Inc
1611 Emily Lane
Aurora, IL 60502

T: +1 866 474 7753
E: grippleinc@gripple.com

Mahmoud Faghihi, PE, SE
California SE No. S5789

PAGE NUMBER 1.17

DATE 7/11/2025

LAYOUT OF SEISMIC BRACES (CONT.)

2.

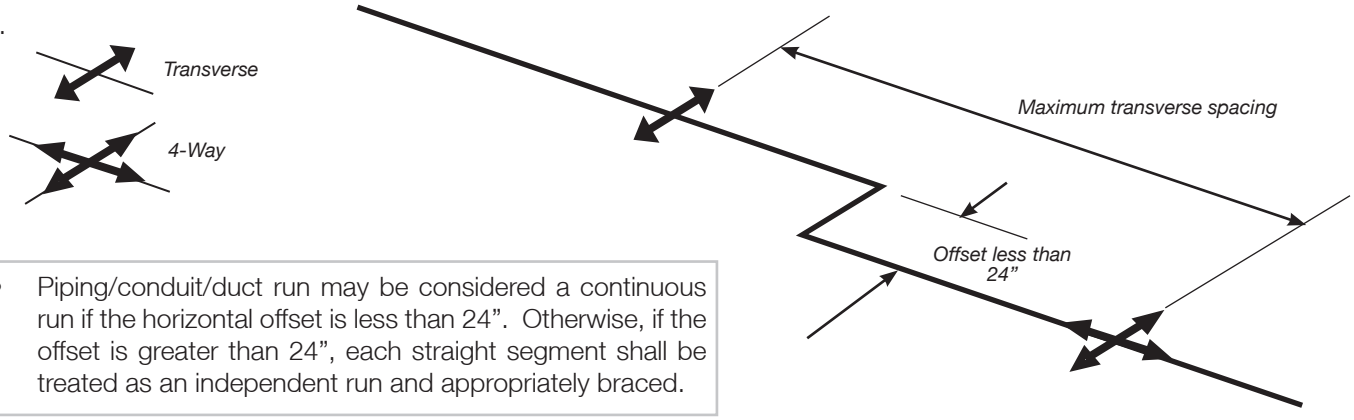

- Piping/conduit/duct run may be considered a continuous run if the horizontal offset is less than 24”. Otherwise, if the offset is greater than 24”, each straight segment shall be treated as an independent run and appropriately braced.

3.

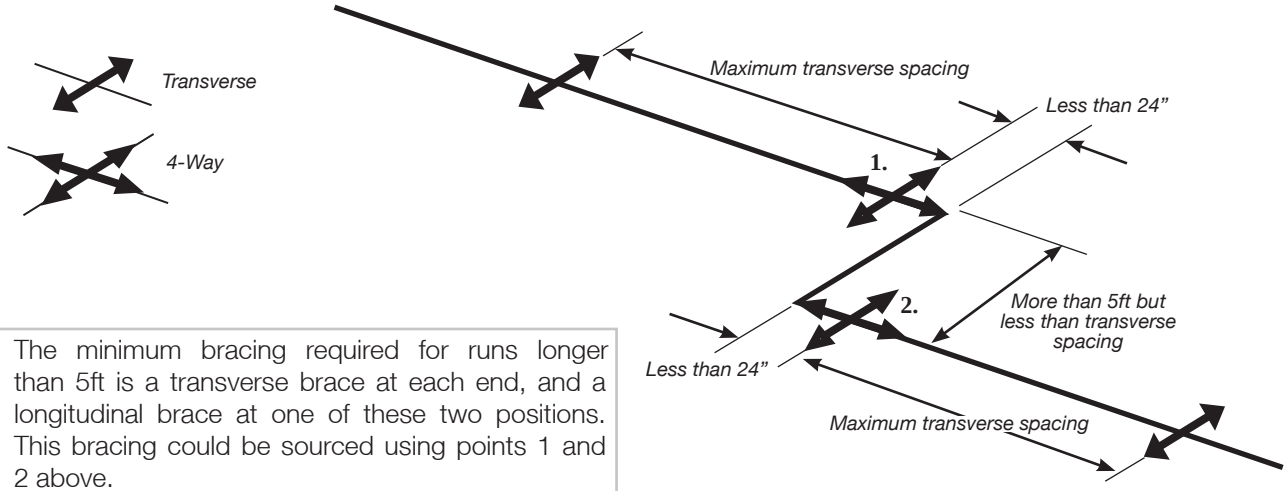

- The minimum bracing required for runs longer than 5ft is a transverse brace at each end, and a longitudinal brace at one of these two positions. This bracing could be sourced using points 1 and 2 above.

GRIPPLE®

Gripple Inc
1611 Emily Lane
Aurora, IL 60502

T: +1 866 474 7753
E: grippleinc@gripple.com

Mahmoud Faghihi, PE, SE
California SE No. S5789

PAGE NUMBER: 1.18

DATE 7/11/2025

LAYOUT OF SEISMIC BRACES (CONT.)

4.

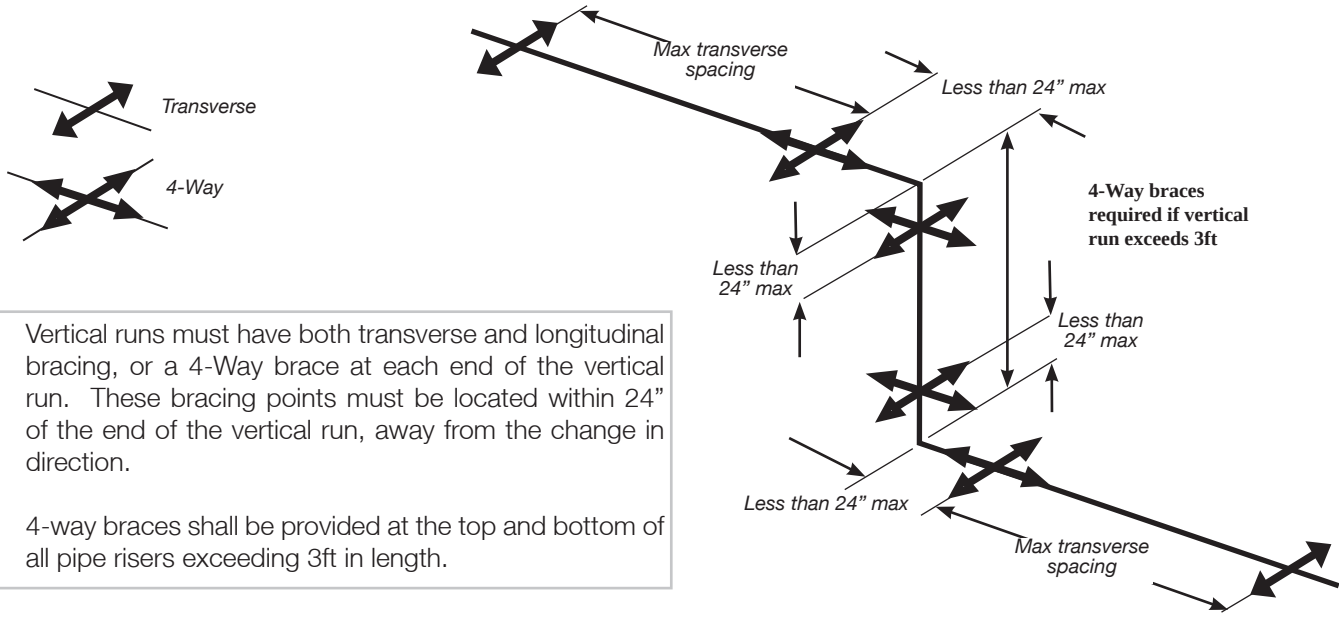

- Vertical runs must have both transverse and longitudinal bracing, or a 4-Way brace at each end of the vertical run. These bracing points must be located within 24" of the end of the vertical run, away from the change in direction.
- 4-way braces shall be provided at the top and bottom of all pipe risers exceeding 3ft in length.

5.

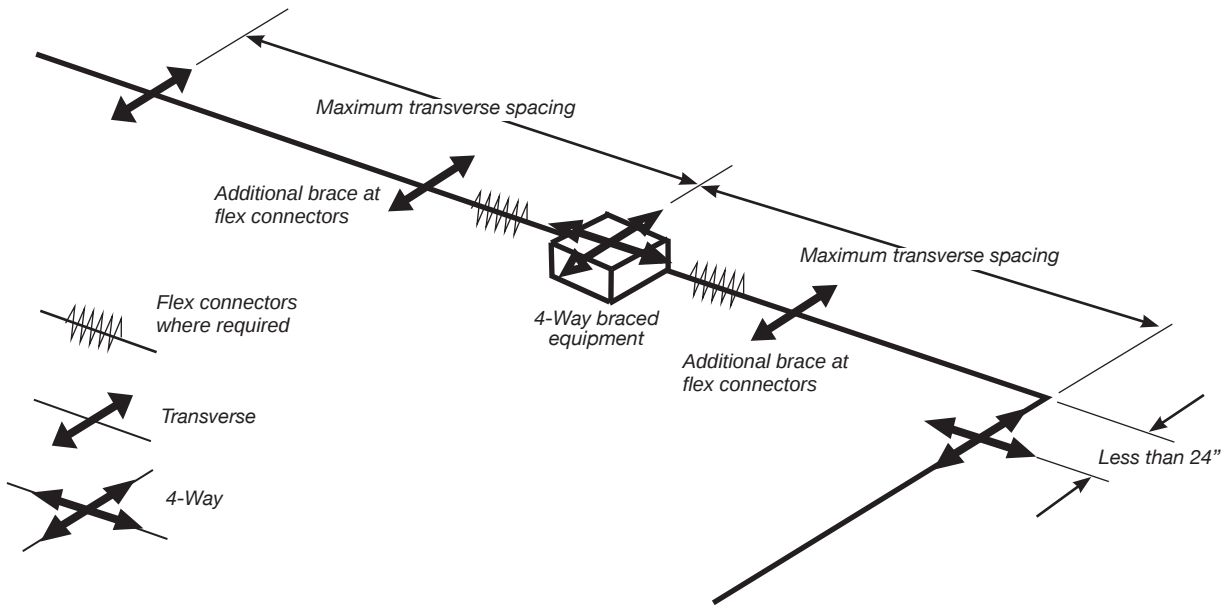

- Each unit of equipment connected to a run of piping/conduit/ductwork should be individually and independently braced. If rigidly connected to the piping/conduit/ductwork, then the equipment bracing shall also be designed for the tributary piping/conduit/ductwork seismic forces. If the piping/conduit/ductwork is not rigidly connected, i.e. flex joints, then the equipment bracing cannot be used to brace the adjacent piping/conduit/ductwork and shall be independently braced.
- Suspended rectangular units of equipment shall be provided with a minimum of one sway brace at each corner (4 total braces). See Section 5 for details.

GRIPPLE®

Gripple Inc
1611 Emily Lane
Aurora, IL 60502

T: +1 866 474 7753
E: grippleinc@gripple.com

Mahmoud Faghihi, PE, SE
California SE No. S5789

LAYOUT OF SEISMIC BRACES (CONT.)

6.

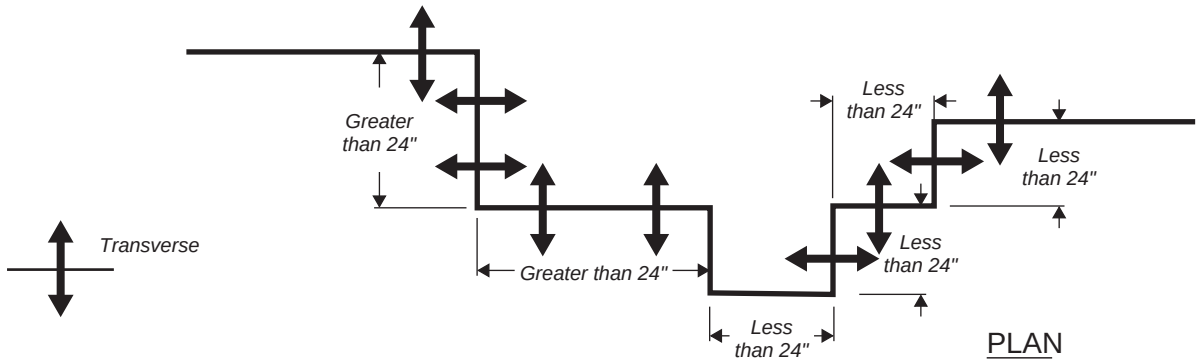

- Multiple changes in direction of piping/conduit/ductwork may be treated as one complete system. Straight runs greater than the offset length described in #2 above (24") require a minimum of 2 transverse braces. Straight runs less than 24" may require as few as one or no braces.

GRIPPLE®

Gripple Inc
1611 Emily Lane
Aurora, IL 60502

T: +1 866 474 7753
E: grippleinc@gripple.com

Mahmoud Faghihi, PE, SE
California SE No. S5789

PAGE NUMBER: 1.20

DATE 7/11/2025

General Notes for Post-Installed Anchors

Post-Installed Anchors

Provide special inspection in accordance with the CBC Section 1705A and 1910A.5 as applicable.

Hilti KB-TZ2: Install anchors per latest edition of ICC-ESR 4266.
Dewalt Power-Stud SD2: Install anchors per latest edition of ICC-ESR 2502
Simpson Strong-bolt 2: Install anchors per latest edition of ICC-ESR 3037

Nut and washer must be tightened until the following torque values are achieved:

Required Installation/Test Torques (ft-lb)					
Anchor Type	"ø" Anchor Diameter				
	1/4"	3/8"	1/2"	5/8"	3/4"
Hilti KB-TZ2	4	30	50	40	110
Dewalt Power-Stud SD2	NA	20	40	60	110
Simpson Strong-bolt 2	4	30	60	90	150

Torque wrench method acceptance criteria: Torque-controlled post-installed anchors tested with a calibrated torque wrench shall attain the specified torque within 1/2 turn of the nut; or one-quarter (1/4) turn of the nut for a 3/8 inch sleeve anchor only.

Initial test frequency: 50 percent of anchor bolts shall be tested. Alternate testing anchors within a group.

If any anchor fails testing, all anchors of the same type shall be tested, which are installed by the same trade, not previously tested until twenty (20) consecutive anchors pass, then resume the initial test frequency.

A BUILDING C

GRIPPLE®

Gripple Inc
1611 Emily Lane
Aurora, IL 60502

T: +1 866 474 7753
E: grippleinc@gripple.com

Mahmoud Faghihi, PE, SE
California SE No. S5789

PAGE NUMBER: 1.21

DATE 7/11/2025

Section 2 - Cable Brace System Details

REVIEWED FOR CODE COMPLIANCE
HCAi
OPM-0709
BY: William Staehlin
DATE: 07/19/2025
CALIFORNIA BUILDING CODE, 2022

CABLE BRACING SYSTEM - SINGLE HUNG PIPE - TRANSVERSE

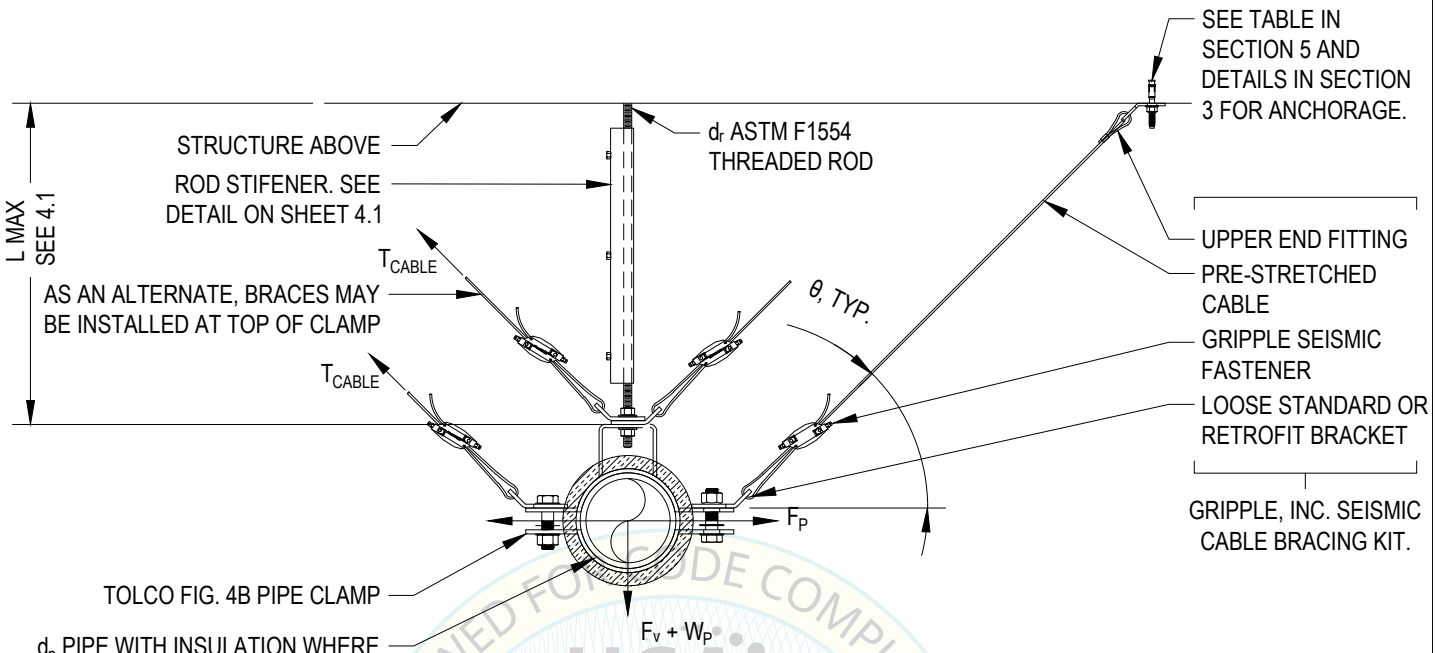

TYPICAL ELEVATION VIEW

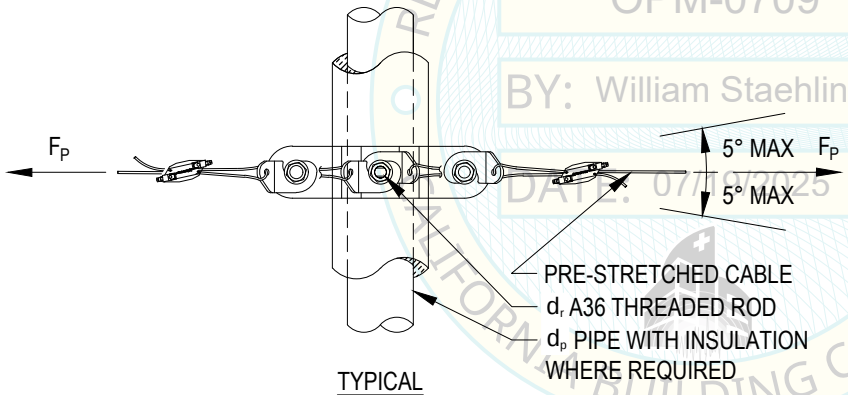

TYPICAL PLAN VIEW

REVIEWED FOR CODE COMPLIANCE
HCAi
OPM-0709
BY: William Staehlin
DATE: 07/19/2025
CALIFORNIA BUILDING CODE, 2022

CABLE KIT CAPACITIES (LRFD)			
KIT NUMBER	MAX CABLE TENSION, T_{CABLE}	TAG COLOR	CABLE DIAMETER
GS10	400 LBS	RED	5/64"
GS12	945 LBS	GREEN	1/8"
GS19	2265 LBS	YELLOW	3/16"
GS25	3570 LBS	PURPLE	1/4"

NOTES:

1. HAND-TIGHTEN CABLES TO REMOVE SLACK. CABLE MUST NOT SUSTAIN ANY DEAD LOAD.
2. SEE PAGE 4.1 FOR ROD STIFFENER DETAIL & REQUIREMENTS.
3. LOOSE STANDARD OR RETROFIT BRACKET SHOULD ALWAYS BE INSTALLED AT THE EQUIPMENT LEVEL. SEE PAGES 4.4 & 4.5 FOR BRACKETS.
4. BUILDING STRUCTURE AT ANCHOR LOCATIONS MUST BE POINT LOAD CAPABLE. VERIFY LOADING W/ S.E.O.R. FOR THE PROJECT.
5. LEAVE 2" TAIL EXTENDING OUT OF GRIPPLE SEISMIC FASTENER FOR FUTURE ADJUSTMENTS.
6. SEE SECTION 5 FOR DESIGN TABLES INCLUDING VALUES OF d_r, d_p AND θ.

BRACING KIT		PART NO.
QUANTITY	COMPONENT	
2	UPPER END FITTING	GSE, GSS
2	PRE-STRETCHED CABLE	-
2	GRIPPLE SEISMIC FASTENER	GS10, GS12 GS19, GS25
2	LOWER BRACKET	GSR, GSS

GRIPPLE®
Gripple Inc
1611 Emily Lane
Aurora, IL 60502
T: +1 866 474 7753
E: grippleinc@gripple.com

Mahmoud Faghihi, PE, SE
California SE No. S5789

PAGE NUMBER: 2.1A

DATE 7/11/2025

CABLE BRACING SYSTEM - SINGLE HUNG PIPE - TRANSVERSE

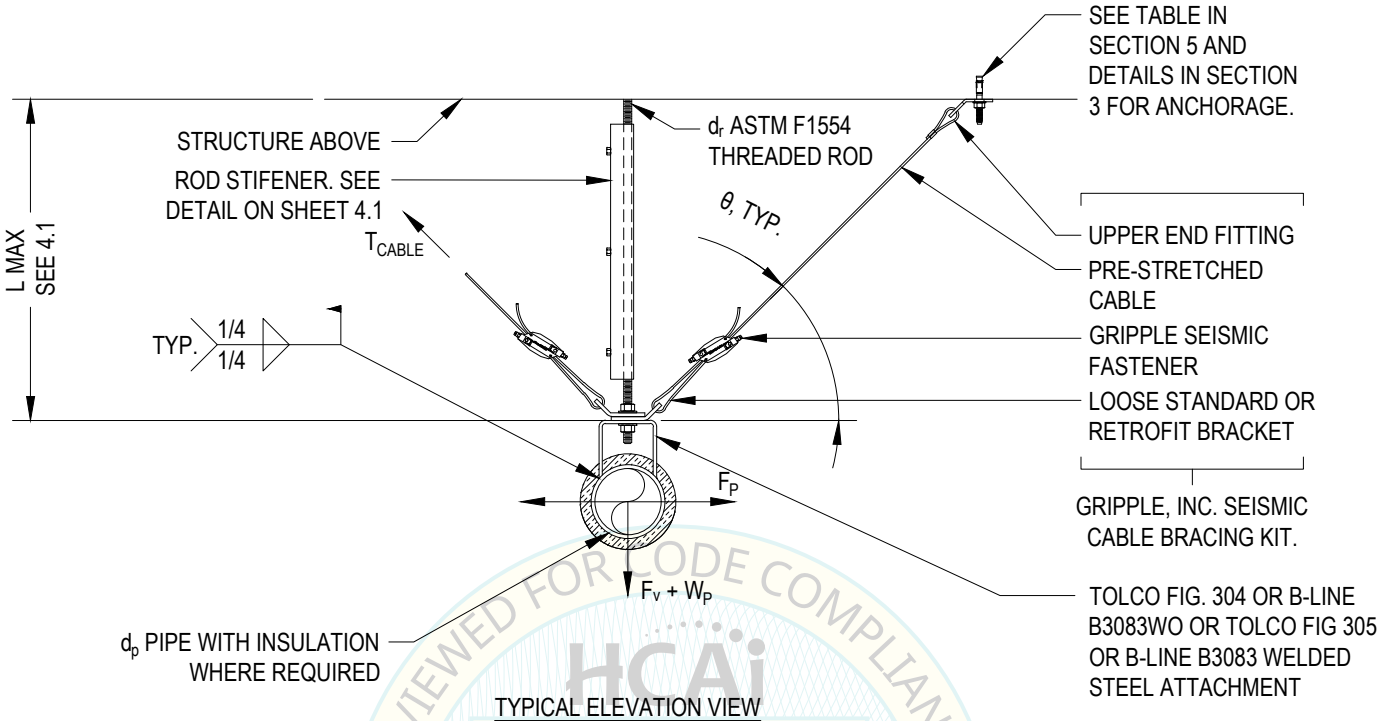

TYPICAL ELEVATION VIEW

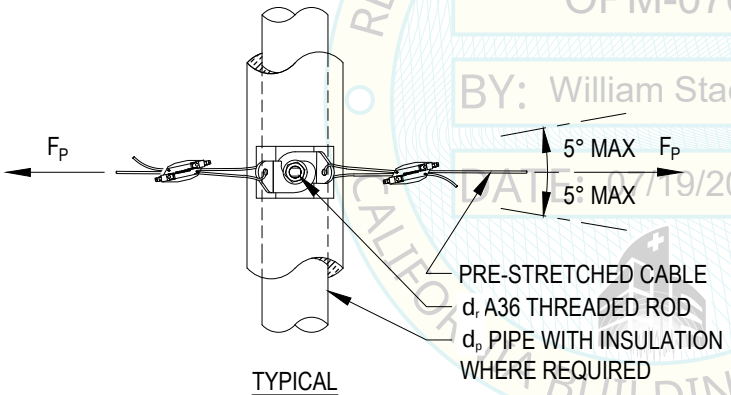

TYPICAL PLAN VIEW

REVIEWED FOR CODE COMPLIANCE
HCAi
OPM-0709
BY: William Staehlin
DATE: 07/19/2025
CALIFORNIA BUILDING CODE, 2022

CABLE KIT CAPACITIES (LRFD)			
KIT NUMBER	MAX CABLE TENSION, T_{CABLE}	TAG COLOR	CABLE DIAMETER
GS10	400 LBS	RED	5/64"
GS12	945 LBS	GREEN	1/8"
GS19	2265 LBS	YELLOW	3/16"
GS25	3570 LBS	PURPLE	1/4"

NOTES:

1. HAND-TIGHTEN CABLES TO REMOVE SLACK. CABLE MUST NOT SUSTAIN ANY DEAD LOAD.
2. SEE PAGE 4.1 FOR ROD STIFFENER DETAIL & REQUIREMENTS.
3. LOOSE STANDARD OR RETROFIT BRACKET SHOULD ALWAYS BE INSTALLED AT THE EQUIPMENT LEVEL. SEE PAGES 4.4 & 4.5 FOR BRACKETS.
4. BUILDING STRUCTURE AT ANCHOR LOCATIONS MUST BE POINT LOAD CAPABLE. VERIFY LOADING W/ S.E.O.R. FOR THE PROJECT.
5. LEAVE 2" TAIL EXTENDING OUT OF GRIPPLE SEISMIC FASTENER FOR FUTURE ADJUSTMENTS.
6. SEE SECTION 5 FOR DESIGN TABLES INCLUDING VALUES OF d_r, d_p AND θ.

BRACING KIT		PART NO.
QUANTITY	COMPONENT	
2	UPPER END FITTING	GSE, GSS
2	PRE-STRETCHED CABLE	-
2	GRIPPLE SEISMIC FASTENER	GS10, GS12 GS19, GS25
2	LOWER BRACKET	GSR, GSS

GRIPPLE®
Gripple Inc
1611 Emily Lane
Aurora, IL 60502
T: +1 866 474 7753
E: grippleinc@gripple.com

Mahmoud Faghihi, PE, SE
California SE No. S5789

PAGE NUMBER: 2.1B

DATE 7/11/2025

CABLE BRACING SYSTEM - SINGLE HUNG PIPE - TRANSVERSE

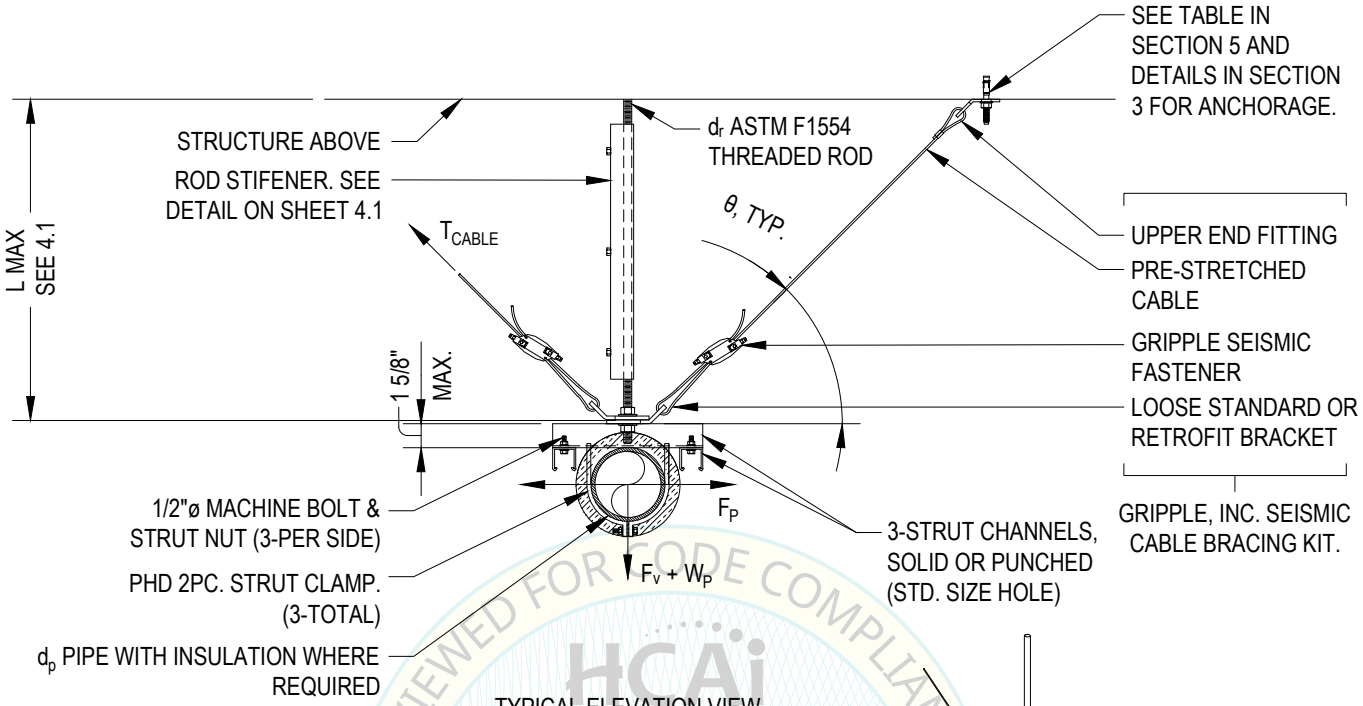

TYPICAL ELEVATION VIEW

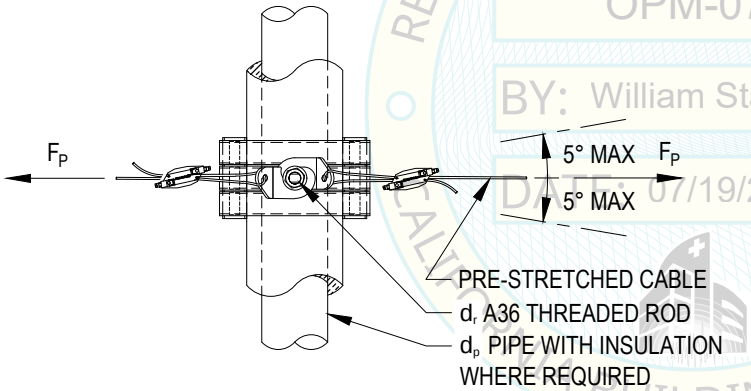

TYPICAL PLAN VIEW

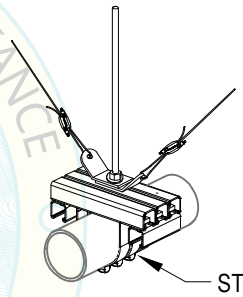

ISOMETRIC

HCAi
OPM-0709
BY: William Staehlin
DATE: 07/19/2025
REVIEWED FOR CODE COMPLIANCE
CALIFORNIA BUILDING CODE, 2022

CABLE KIT CAPACITIES (LRFD)			
KIT NUMBER	MAX CABLE TENSION, T_{CABLE}	TAG COLOR	CABLE DIAMETER
GS10	400 LBS	RED	5/64"
GS12	945 LBS	GREEN	1/8"
GS19	2265 LBS	YELLOW	3/16"
GS25	3570 LBS	PURPLE	1/4"

NOTES:

1. HAND-TIGHTEN CABLES TO REMOVE SLACK. CABLE MUST NOT SUSTAIN ANY DEAD LOAD.
2. SEE PAGE 4.1 FOR ROD STIFFENER DETAIL & REQUIREMENTS.
3. LOOSE STANDARD OR RETROFIT BRACKET SHOULD ALWAYS BE INSTALLED AT THE EQUIPMENT LEVEL. SEE PAGES 4.4 & 4.5 FOR BRACKETS.
4. BUILDING STRUCTURE AT ANCHOR LOCATIONS MUST BE POINT LOAD CAPABLE. VERIFY LOADING W/ S.E.O.R. FOR THE PROJECT.
5. LEAVE 2" TAIL EXTENDING OUT OF GRIPPLE SEISMIC FASTENER FOR FUTURE ADJUSTMENTS.
6. SEE SECTION 5 FOR DESIGN TABLES INCLUDING VALUES OF d_r, d_p AND θ.

BRACING KIT		PART NO.
QUANTITY	COMPONENT	
2	UPPER END FITTING	GSE, GSS
2	PRE-STRETCHED CABLE	-
2	GRIPPLE SEISMIC FASTENER	GS10, GS12 GS19, GS25
2	LOWER BRACKET	GSR, GSS

GRIPPLE®

Gripple Inc
1611 Emily Lane
Aurora, IL 60502

T: +1 866 474 7753
E: grippleinc@gripple.com

Mahmoud Faghihi, PE, SE
California SE No. S5789

PAGE NUMBER: 2.1C

DATE 7/11/2025

CABLE BRACING SYSTEM - SINGLE HUNG PIPE - LONGITUDINAL

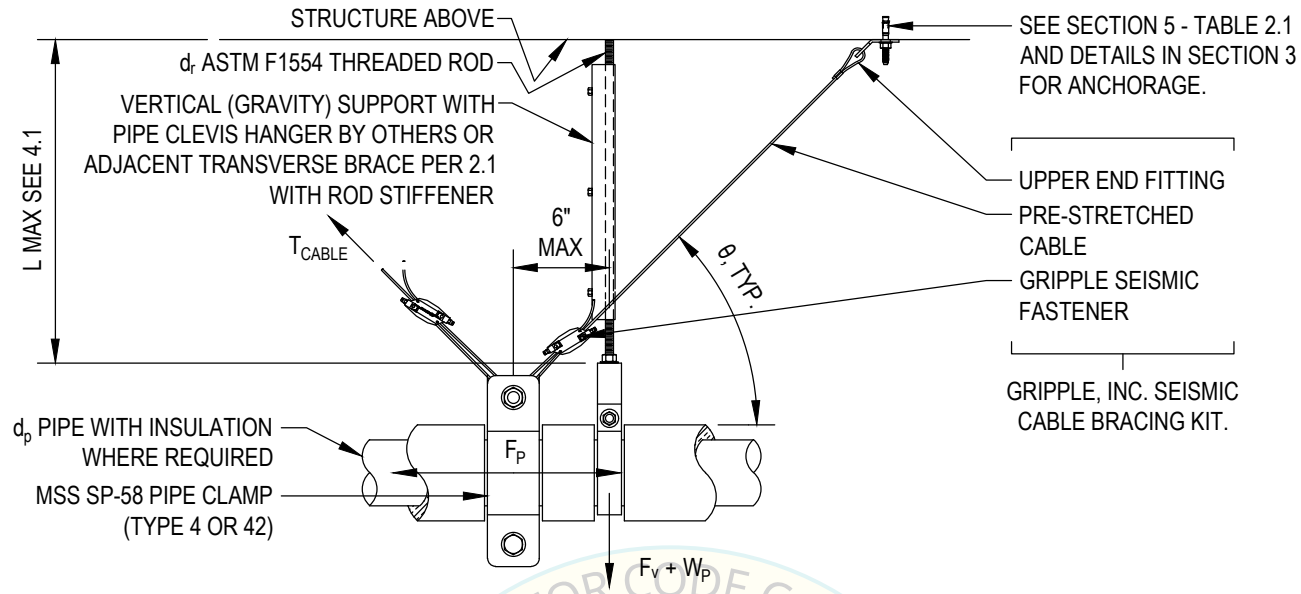

TYPICAL ELEVATION VIEW

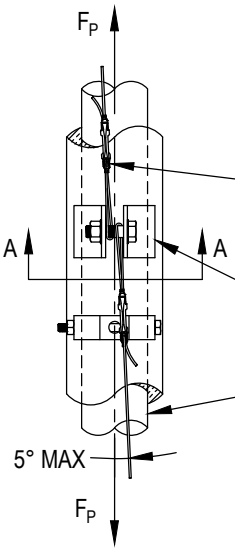

TYPICAL PLAN VIEW

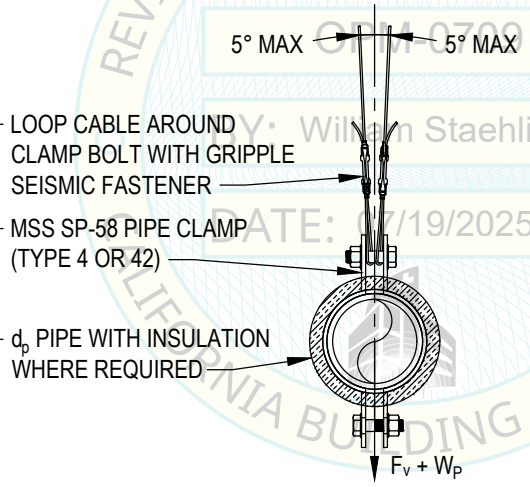

SECTION A-A

CABLE KIT CAPACITIES (LRFD)			
KIT NUMBER	MAX CABLE TENSION, T_{CABLE}	TAG COLOR	CABLE DIAMETER
GS10	400 LBS	RED	5/64"
GS12	945 LBS	GREEN	1/8"
GS19	2265 LBS	YELLOW	3/16"
GS25	3570 LBS	PURPLE	1/4"

BRACING KIT		PART NO.
QUANTITY	COMPONENT	
2	UPPER END FITTING	GSE, GSS
2	PRE-STRETCHED CABLE	-
2	GRIPPLE SEISMIC FASTENER	GS10, GS12 GS19, GS25
2	LOWER BRACKET	GSR, GSS

REVIEWED FOR CODE COMPLIANCE
HCAi
OPM-0709
BY: William Staehlin
DATE: 07/19/2025
CALIFORNIA BUILDING CODE 2022

NOTES:

1. HAND-TIGHTEN CABLES TO REMOVE SLACK. CABLE MUST NOT SUSTAIN ANY DEAD LOAD.
2. SEE PAGE 4.1 FOR ROD STIFFENER DETAIL & REQUIREMENTS.
3. LOOSE STANDARD OR RETROFIT BRACKET SHOULD ALWAYS BE INSTALLED AT THE EQUIPMENT LEVEL. SEE PAGES 4.4 & 4.5 FOR BRACKETS.
4. BUILDING STRUCTURE AT ANCHOR LOCATIONS MUST BE POINT LOAD CAPABLE. VERIFY LOADING W/ S.E.O.R. FOR THE PROJECT.
5. LEAVE 2" TAIL EXTENDING OUT OF GRIPPLE SEISMIC FASTENER FOR FUTURE ADJUSTMENTS.
6. SEE SECTION 5 FOR DESIGN TABLES INCLUDING VALUES OF d_r, d_p, AND θ.

GRIPPLE®
Gripple Inc
1611 Emily Lane
Aurora, IL 60502
T: +1 866 474 7753
E: grippleinc@gripple.com

Mahmoud Faghihi, PE, SE
California SE No. S5789

PAGE NUMBER: 2.2

DATE 7/11/2025

CABLE BRACING SYSTEM - SINGLE HUNG PIPE - 4 WAY BRACING

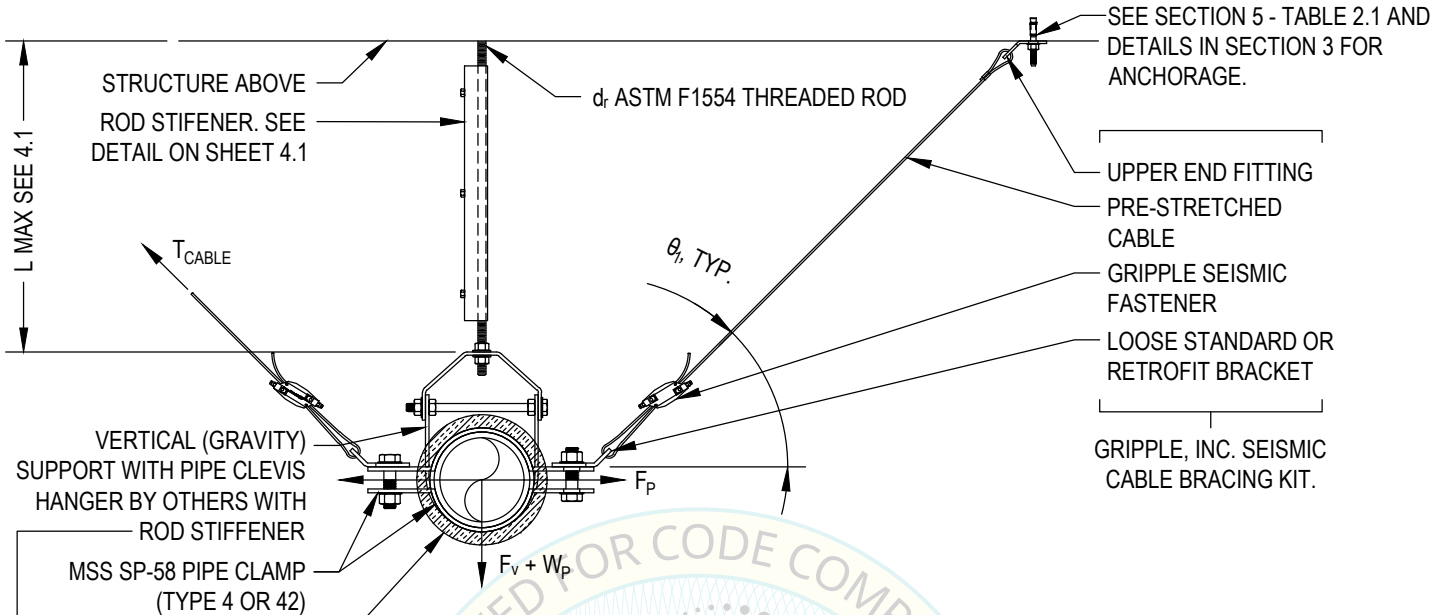

TYPICAL ELEVATION VIEW

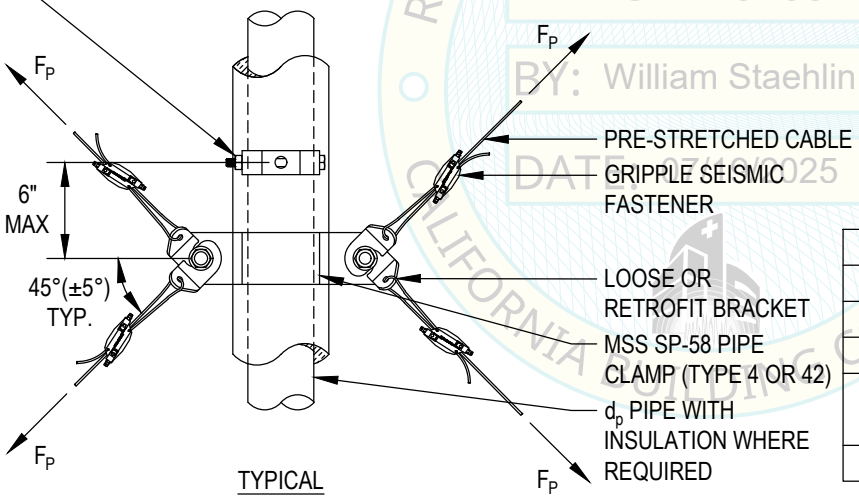

TYPICAL PLAN VIEW

& $ % / (. , 7 & $ 3 $ & , 7 , (6 / 5) '			
KIT NUMBER	MAX CABLE TENSION, T_{CABLE}	TAG COLOR	CABLE DIAMETER
GS10	400 LBS	RED	5/64"
GS12	945 LBS	GREEN	1/8"
GS19	2265 LBS	YELLOW	3/16"
GS25	3570 LBS	PURPLE	1/4"

% 5 $ & , 1 * . , 7		PART NO.
QUANTITY	COMPONENT	
4	UPPER END FITTING	GSE, GSS
4	PRE-STRETCHED CABLE	-
4	GRIPPLE SEISMIC FASTENER	GS10, GS12 GS19, GS25
4	LOWER BRACKET	GSR, GSS

HCAi
OPM-0709
BY: William Staehlin
DATE: 07/19/2025
REVIEWED FOR CODE COMPLIANCE
CALIFORNIA BUILDING CODE 2022

NOTES:

1. HAND-TIGHTEN CABLES TO REMOVE SLACK. CABLE MUST NOT SUSTAIN ANY DEAD LOAD.
2. SEE PAGE 4.1 FOR ROD STIFFENER DETAIL & REQUIREMENTS.
3. LOOSE STANDARD OR RETROFIT BRACKET SHOULD ALWAYS BE INSTALLED AT THE EQUIPMENT LEVEL. SEE PAGES 4.4 & 4.5 FOR BRACKETS.
4. BUILDING STRUCTURE AT ANCHOR LOCATIONS MUST BE POINT LOAD CAPABLE. VERIFY LOADING W/ S.E.O.R. FOR THE PROJECT.
5. LEAVE 2" TAIL EXTENDING OUT OF GRIPPLE SEISMIC FASTENER FOR FUTURE ADJUSTMENTS.
6. SEE SECTION 5 FOR DESIGN TABLES INCLUDING VALUES OF d_r, d_p, AND θ.

GRIPPLE®
Gripple Inc
1611 Emily Lane
Aurora, IL 60502
T: +1 866 474 7753
E: grippleinc@gripple.com

Mahmoud Faghihi, PE, SE
California SE No. S5789

PAGE NUMBER: 2.3

DATE 7/11/2025

CABLE BRACING SYSTEM - TRAPEZE - TRANSVERSE RECTANGULAR DUCT

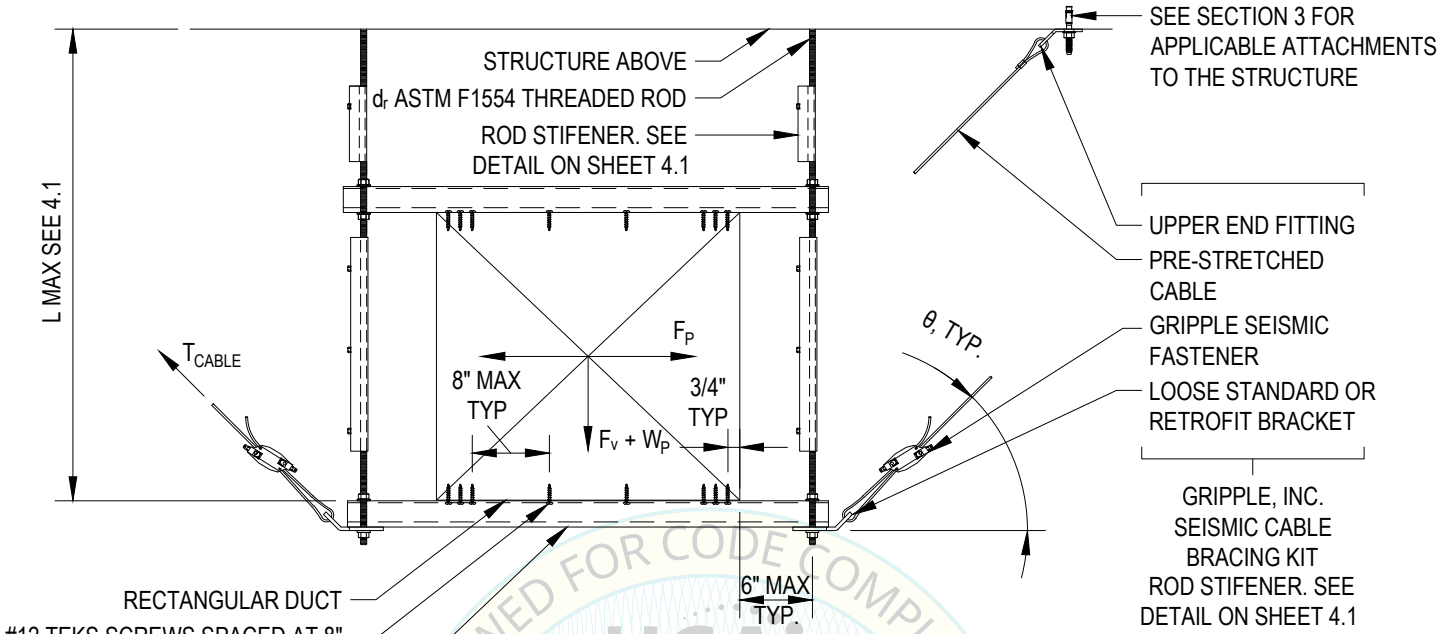

TYPICAL ELEVATION VIEW

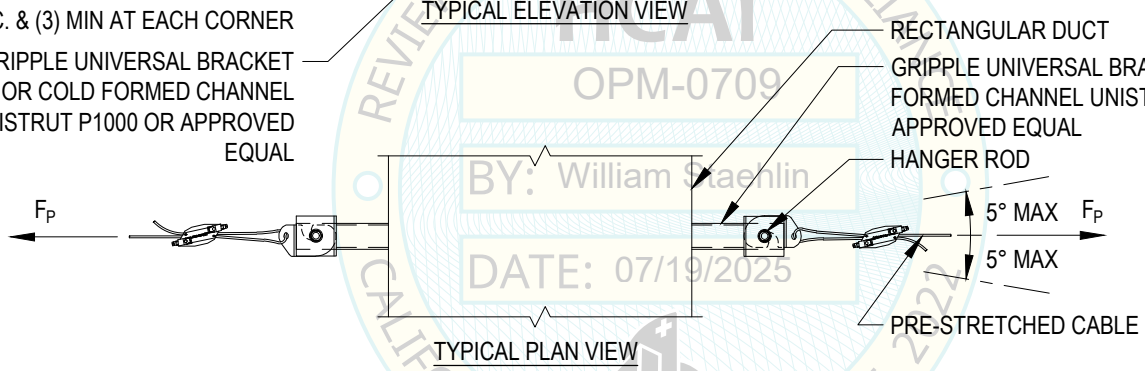

TYPICAL PLAN VIEW

REVIEWED FOR CODE COMPLIANCE
HCAi
OPM-0709
BY: William Staehlin
DATE: 07/19/2025
CALIFORNIA BUILDING CODE, 2022

CABLE KIT CAPACITIES (LRFD)			
KIT NUMBER	MAX CABLE TENSION, T_{CABLE}	TAG COLOR	CABLE DIAMETER
GS10	400 LBS	RED	5/64"
GS12	945 LBS	GREEN	1/8"
GS19	2265 LBS	YELLOW	3/16"
GS25	3570 LBS	PURPLE	1/4"

BRACING KIT		PART NO.
QUANTITY	COMPONENT	
2	UPPER END FITTING	GSE, GSS
2	PRE-STRETCHED CABLE	-
2	GRIPPLE SEISMIC FASTENER	GS10, GS12 GS19, GS25
2	LOWER BRACKET	GSR, GSS

NOTES:

1. HAND-TIGHTEN CABLES TO REMOVE SLACK. CABLE MUST NOT SUSTAIN ANY DEAD LOAD.
2. SEE PAGE 4.1 FOR ROD STIFFENER DETAIL & REQUIREMENTS.
3. LOOSE STANDARD OR RETROFIT BRACKET SHOULD ALWAYS BE INSTALLED AT THE EQUIPMENT LEVEL. SEE PAGE 4.4 & 4.5 FOR BRACKETS.
4. BUILDING STRUCTURE AT ANCHOR LOCATIONS MUST BE POINT LOAD CAPABLE. VERIFY LOADING w/ S.E.O.R. FOR THE PROJECT.
5. LEAVE 2" TAIL EXTENDING OUT OF GRIPPLE SEISMIC FASTENER FOR FUTURE ADJUSTMENTS.
6. SEE SECTION 5 FOR DESIGN TABLES INCLUDING VALUES OF d_r AND θ.
7. VERTICAL HANGER RODS SHALL BE CONTINUOUS.

GRIPPLE®
Gripple Inc
1611 Emily Lane
Aurora, IL 60502
T: +1 866 474 7753
E: grippleinc@gripple.com

Mahmoud Faghihi, PE, SE
California SE No. S5789

PAGE NUMBER: 2.4

DATE 7/11/2025

CABLE BRACING SYSTEM - TRAPEZE - LONGITUDINAL
RECTANGULAR DUCT

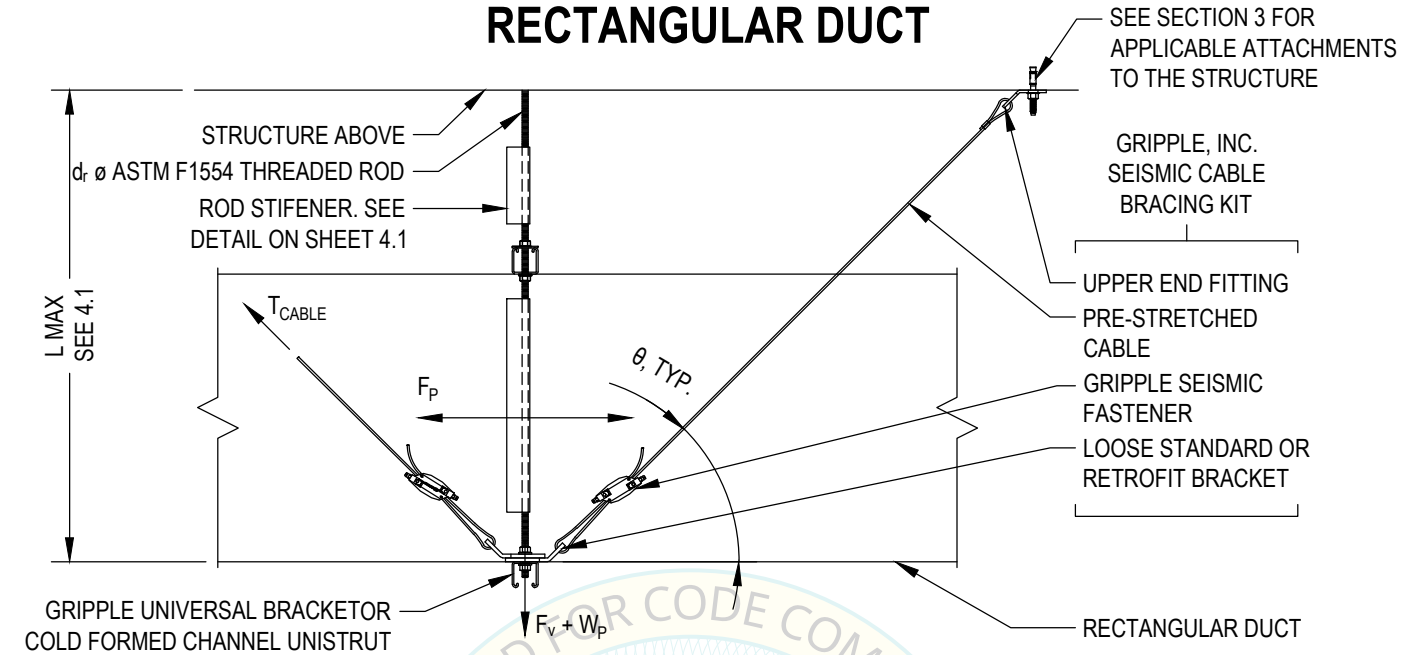

TYPICAL ELEVATION VIEW

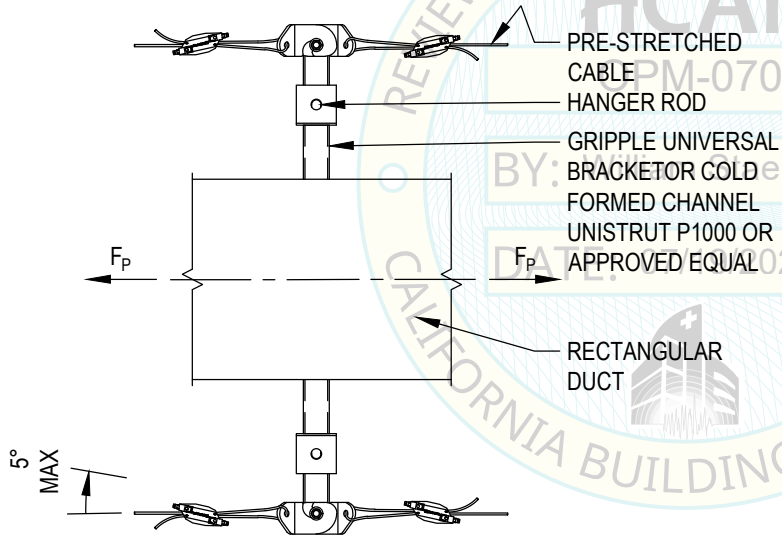

TYPICAL PLAN VIEW

CABLE KIT CAPACITIES (LRFD)			
KIT NUMBER	MAX CABLE TENSION, T_{CABLE}	TAG COLOR	CABLE DIAMETER
GS10	400 LBS	RED	5/64"
GS12	945 LBS	GREEN	1/8"
GS19	2265 LBS	YELLOW	3/16"
GS25	3570 LBS	PURPLE	1/4"

BRACING KIT		PART NO.
QUANTITY	COMPONENT	
4	UPPER END FITTING	GSE, GSS
4	PRE-STRETCHED CABLE	-
4	GRIPPLE SEISMIC FASTENER	GS10, GS12 GS19, GS25
4	LOWER BRACKET	GSR, GSS

REVIEWED FOR CODE COMPLIANCE
HCAi
OPM-0709
BY: William Staehlin
DATE: 07/19/2025
CALIFORNIA BUILDING CODE 2022

NOTES:

1. HAND-TIGHTEN CABLES TO REMOVE SLACK. CABLE MUST NOT SUSTAIN ANY DEAD LOAD.
2. SEE PAGE 4.1 FOR ROD STIFFENER DETAIL & REQUIREMENTS.
3. LOOSE STANDARD OR RETROFIT BRACKET SHOULD ALWAYS BE INSTALLED AT THE EQUIPMENT LEVEL. SEE PAGES 4.4 & 4.5 FOR BRACKETS.
4. BUILDING STRUCTURE AT ANCHOR LOCATIONS MUST BE POINT LOAD CAPABLE. VERIFY LOADING W/ S.E.O.R. FOR THE PROJECT.
5. LEAVE 2" TAIL EXTENDING OUT OF GRIPPLE SEISMIC FASTENER FOR FUTURE ADJUSTMENTS.
6. SEE SECTION 5 FOR DESIGN TABLES INCLUDING VALUES OF d_r AND θ.
7. VERTICAL HANGER RODS SHALL BE CONTINUOUS.

GRIPPLE®
Gripple Inc
1611 Emily Lane
Aurora, IL 60502
T: +1 866 474 7753
E: grippleinc@gripple.com

Mahmoud Faghihi, PE, SE
California SE No. S5789

PAGE NUMBER: 2.5

DATE 7/11/2025

CABLE BRACING SYSTEM - TRAPEZE - 4 WAY
RECTANGULAR DUCT

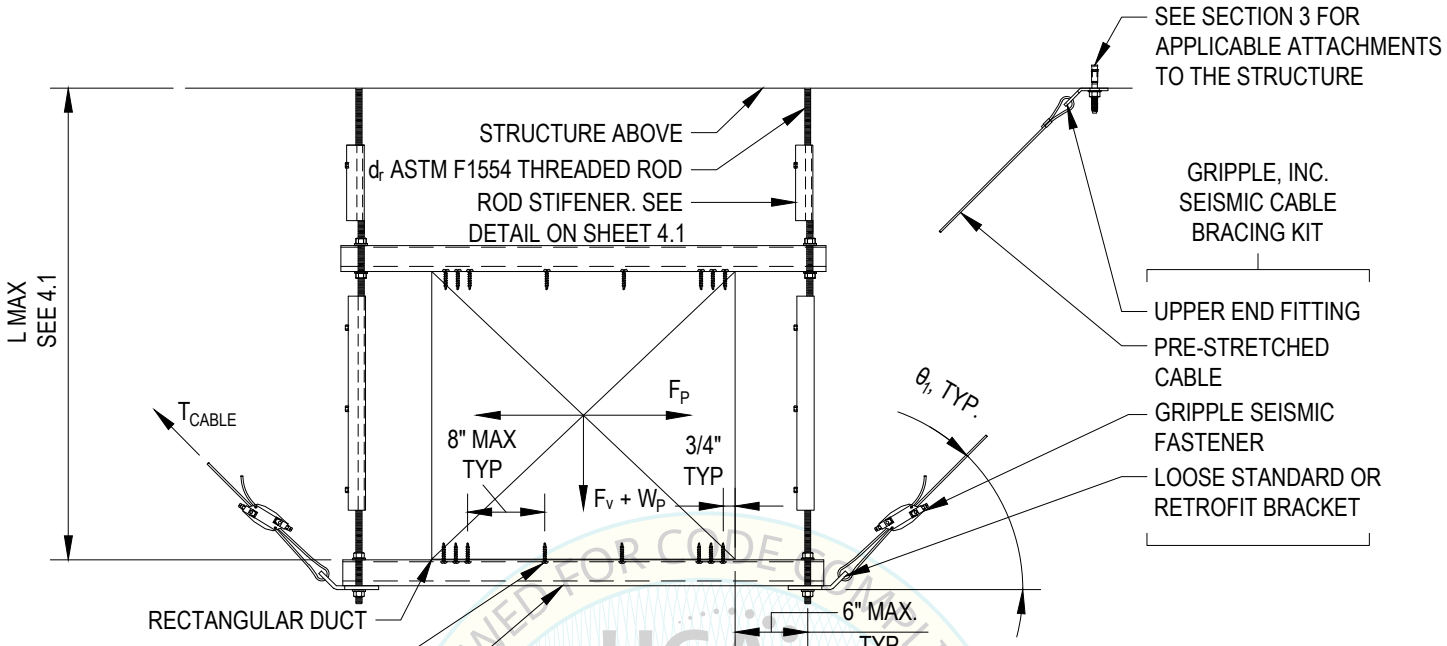

TYPICAL ELEVATION VIEW

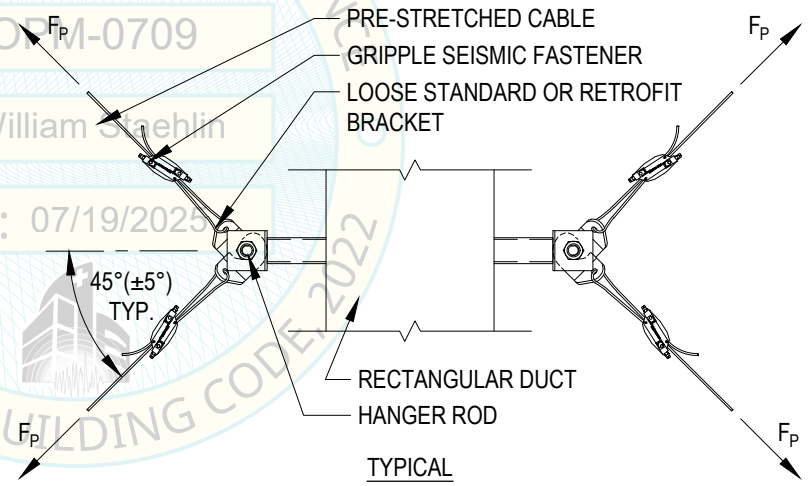

TYPICAL PLAN VIEW

CABLE KIT CAPACITIES (LRFD)			
KIT NUMBER	MAX CABLE TENSION, T_{CABLE}	TAG COLOR	CABLE DIAMETER
GS10	400 LBS	RED	5/64"
GS12	945 LBS	GREEN	1/8"
GS19	2265 LBS	YELLOW	3/16"
GS25	3570 LBS	PURPLE	1/4"

NOTES:
1. HAND-TIGHTEN CABLES TO REMOVE SLACK. CABLE MUST NOT SUSTAIN ANY DEAD LOAD.
2. SEE PAGE 4.1 FOR ROD STIFFENER DETAIL & REQUIREMENTS.
3. LOOSE STANDARD OR RETROFIT BRACKET SHOULD ALWAYS BE INSTALLED AT THE EQUIPMENT LEVEL. SEE PAGES 4.4 & 4.5 FOR BRACKETS.
4. BUILDING STRUCTURE AT ANCHOR LOCATIONS MUST BE POINT LOAD CAPABLE. VERIFY LOADING W/ S.E.O.R. FOR THE PROJECT.
5. LEAVE 2" TAIL EXTENDING OUT OF GRIPPLE SEISMIC FASTENER FOR FUTURE ADJUSTMENTS.
6. SEE SECTION 5 FOR DESIGN TABLES INCLUDING VALUES OF d_r AND θ.
7. VERTICAL HANGER RODS SHALL BE CONTINUOUS.

BRACING KIT		PART NO.
QUANTITY	COMPONENT	
4	UPPER END FITTING	GSE, GSS
4	PRE-STRETCHED CABLE	-
4	GRIPPLE SEISMIC FASTENER	GS10, GS12 GS19, GS25
4	LOWER BRACKET	GSR, GSS

REVIEWED FOR CODE COMPLIANCE
HCAI
OPM-0709
BY: William Staehlin
DATE: 07/19/2025
CALIFORNIA BUILDING CODE 2022

GRIPPLE®
Gripple Inc
1611 Emily Lane
Aurora, IL 60502
T: +1 866 474 7753
E: grippleinc@gripple.com

Mahmoud Faghihi, PE, SE
California SE No. S5789

PAGE NUMBER: 2.6

DATE 7/11/2025

CABLE BRACING SYSTEM - ROUND DUCT - TRANSVERSE (UP TO 84 INCHES)

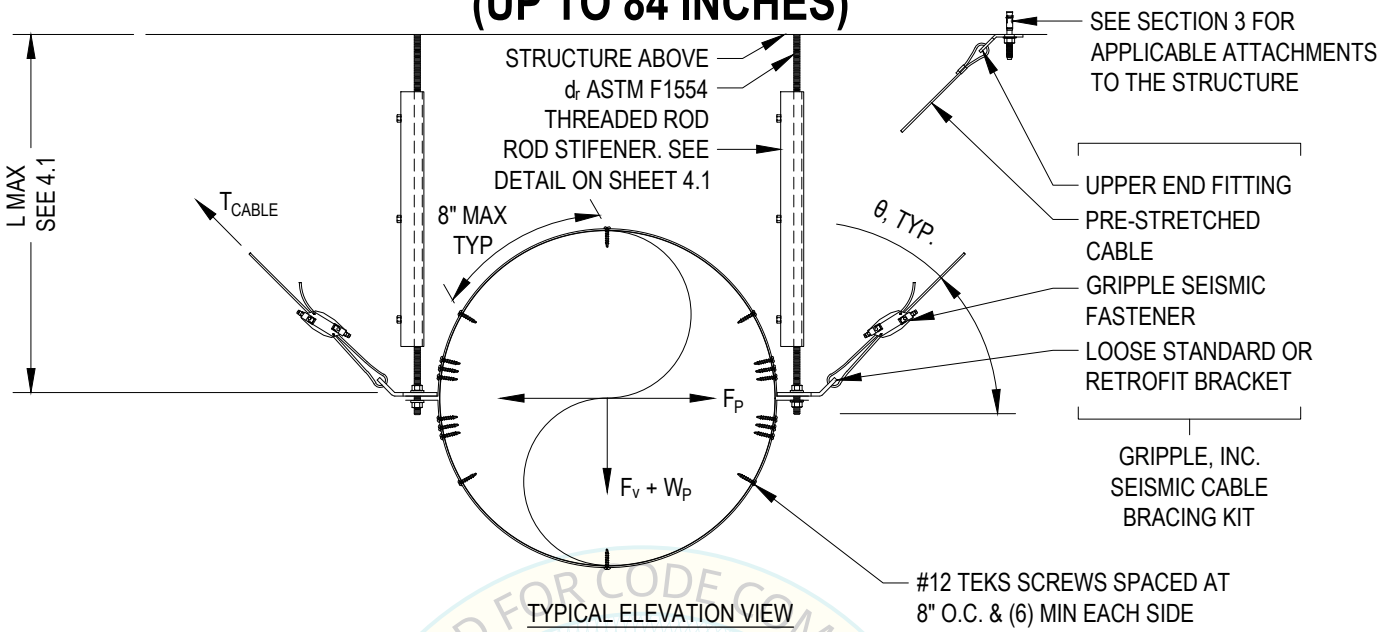

TYPICAL ELEVATION VIEW

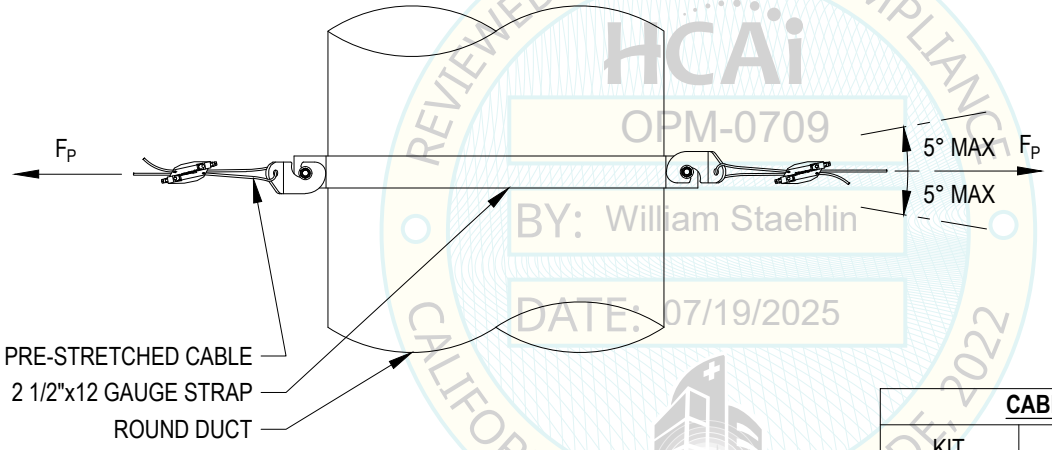

TYPICAL PLAN VIEW

REVIEWED FOR CODE COMPLIANCE
HCAi
OPM-0709
BY: William Staehlin
DATE: 07/19/2025
CALIFORNIA BUILDING CODE, 2022

CABLE KIT CAPACITIES (LRFD)			
KIT NUMBER	MAX CABLE TENSION, T_{CABLE}	TAG COLOR	CABLE DIAMETER
GS10	400 LBS	RED	5/64"
GS12	945 LBS	GREEN	1/8"
GS19	2265 LBS	YELLOW	3/16"
GS25	3570 LBS	PURPLE	1/4"

NOTES:

1. HAND-TIGHTEN CABLES TO REMOVE SLACK. CABLE MUST NOT SUSTAIN ANY DEAD LOAD.
2. SEE PAGE 4.1 FOR ROD STIFFENER DETAIL & REQUIREMENTS.
3. LOOSE STANDARD OR RETROFIT BRACKET SHOULD ALWAYS BE INSTALLED AT THE EQUIPMENT LEVEL. SEE PAGES 4.4 & 4.5 FOR BRACKETS.
4. BUILDING STRUCTURE AT ANCHOR LOCATIONS MUST BE POINT LOAD CAPABLE. VERIFY LOADING W/ S.E.O.R. FOR THE PROJECT.
5. LEAVE 2" TAIL EXTENDING OUT OF GRIPPLE SEISMIC FASTENER FOR FUTURE ADJUSTMENTS.
6. SEE SECTION 5 FOR DESIGN TABLES INCLUDING VALUES OF d_r AND θ.

BRACING KIT		PART NO.
QUANTITY	COMPONENT	
2	UPPER END FITTING	GSE, GSS
2	PRE-STRETCHED CABLE	-
2	GRIPPLE SEISMIC FASTENER	GS10, GS12 GS19, GS25
2	LOWER BRACKET	GSR, GSS

GRIPPLE®
Gripple Inc
1611 Emily Lane
Aurora, IL 60502
T: +1 866 474 7753
E: grippleinc@gripple.com

MRAghihi

Mahmoud Faghihi, PE, SE
California SE No. S5789

PAGE NUMBER: 2.7

DATE 7/11/2025

CABLE BRACING SYSTEM - ROUND DUCT - LONGITUDINAL (UP TO 84 INCHES)

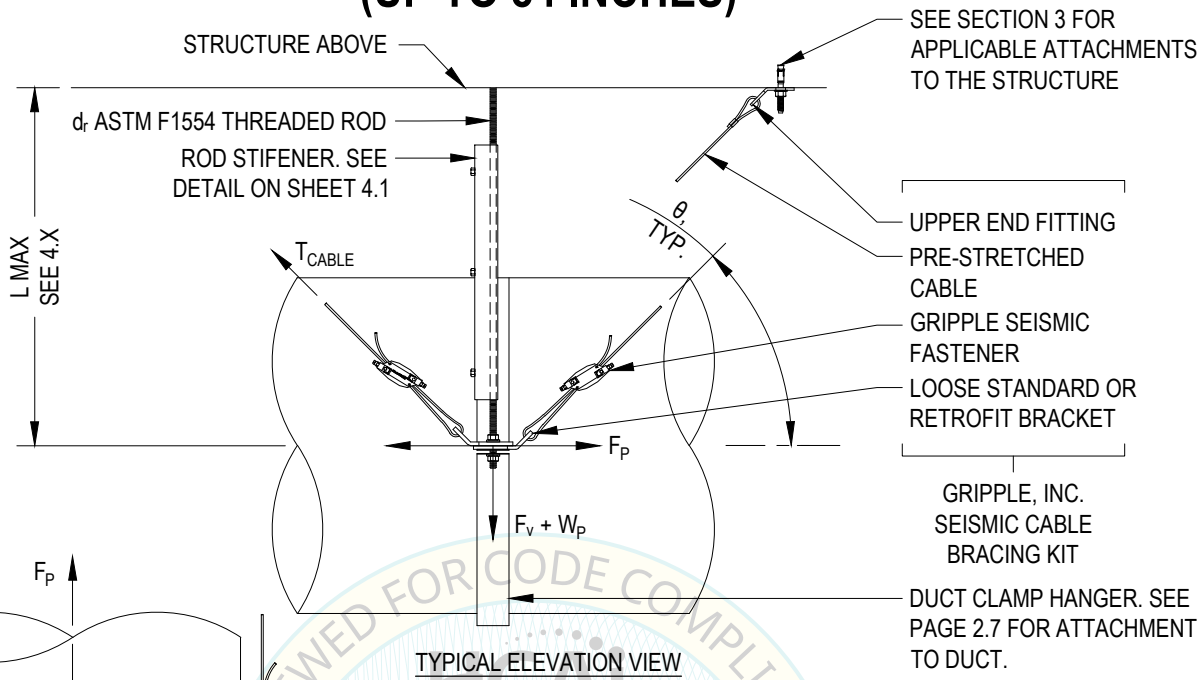

TYPICAL ELEVATION VIEW

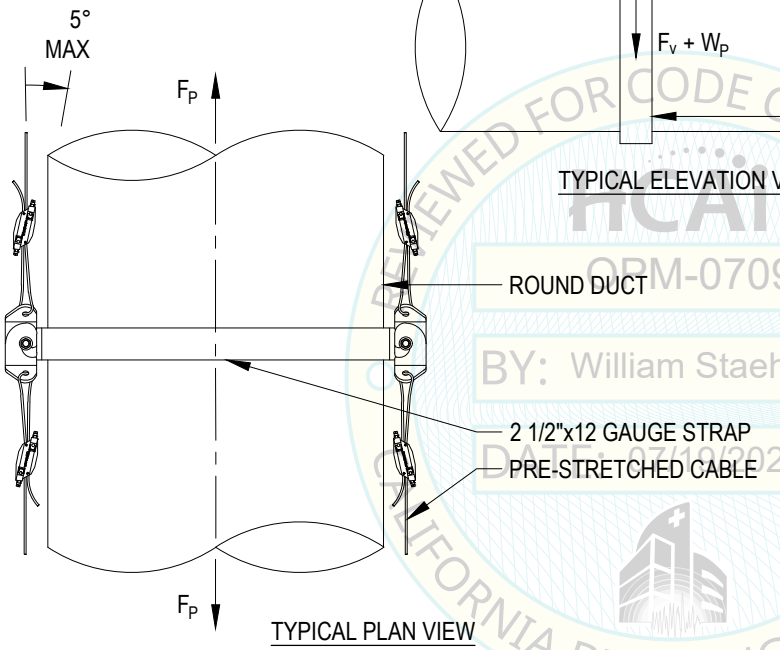

TYPICAL PLAN VIEW

REVIEWED FOR CODE COMPLIANCE
HCAI
OPM-0709
BY: William Staehlin
DATE: 07/19/2025
CALIFORNIA BUILDING CODE, 2022

CABLE KIT CAPACITIES (LRFD)			
KIT NUMBER	MAX CABLE TENSION, T_{CABLE}	TAG COLOR	CABLE DIAMETER
GS10	400 LBS	RED	5/64"
GS12	945 LBS	GREEN	1/8"
GS19	2265 LBS	YELLOW	3/16"
GS25	3570 LBS	PURPLE	1/4"

NOTES:

1. HAND-TIGHTEN CABLES TO REMOVE SLACK. CABLE MUST NOT SUSTAIN ANY DEAD LOAD.
2. SEE PAGE 4.1 FOR ROD STIFFENER DETAIL & REQUIREMENTS.
3. LOOSE STANDARD OR RETROFIT BRACKET SHOULD ALWAYS BE INSTALLED AT THE EQUIPMENT LEVEL. SEE PAGES 4.4 & 4.5 FOR BRACKETS.
4. BUILDING STRUCTURE AT ANCHOR LOCATIONS MUST BE POINT LOAD CAPABLE. VERIFY LOADING W/ S.E.O.R. FOR THE PROJECT.
5. LEAVE 2" TAIL EXTENDING OUT OF GRIPPLE SEISMIC FASTENER FOR FUTURE ADJUSTMENTS.
6. SEE SECTION 5 FOR DESIGN TABLES INCLUDING VALUES OF d_r AND θ.

BRACING KIT		PART NO.
QUANTITY	COMPONENT	
4	UPPER END FITTING	GSE, GSS
4	PRE-STRETCHED CABLE	-
4	GRIPPLE SEISMIC FASTENER	GS10, GS12 GS19, GS25
4	LOWER BRACKET	GSR, GSS

GRIPPLE®
Gripple Inc
1611 Emily Lane
Aurora, IL 60502
T: +1 866 474 7753
E: grippleinc@gripple.com

Mahmoud Faghihi, PE, SE
California SE No. S5789

PAGE NUMBER: 2.8

DATE 7/11/2025

CABLE BRACING SYSTEM - ROUND DUCT - 4 WAY (UP TO 84 INCHES)

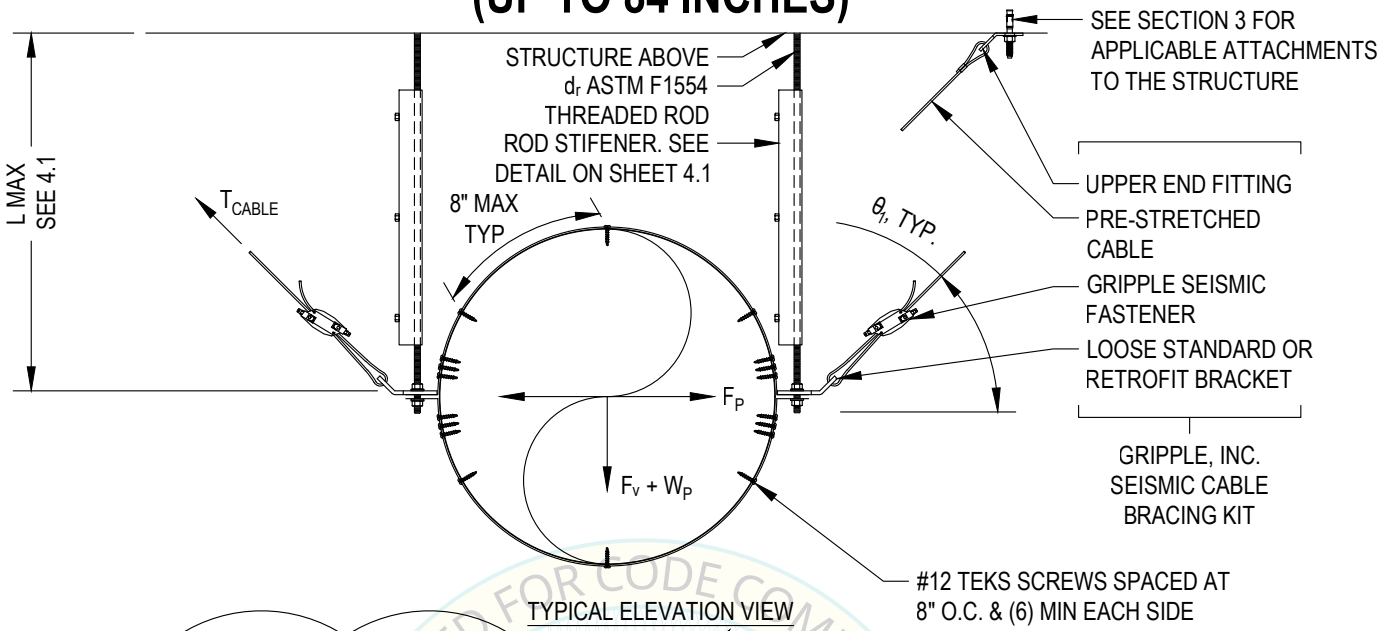

TYPICAL ELEVATION VIEW

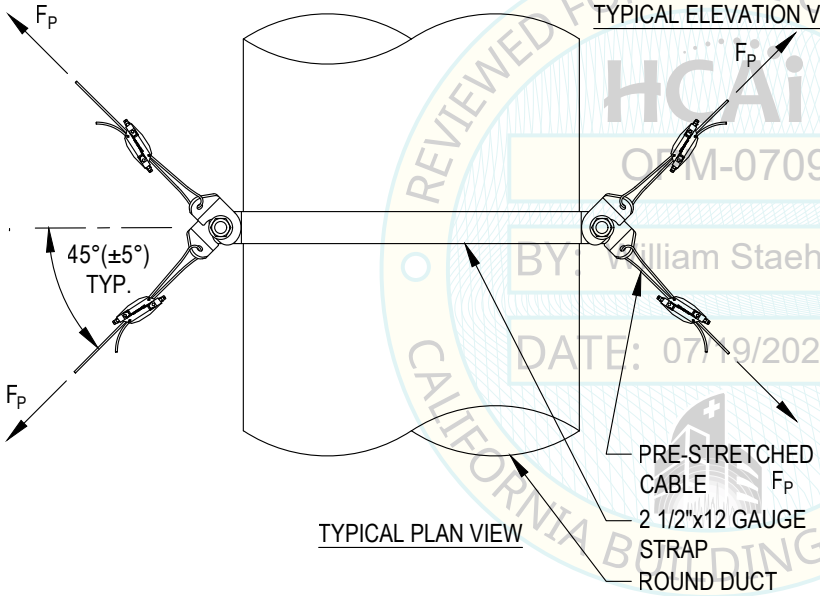

TYPICAL PLAN VIEW

REVIEWED FOR CODE COMPLIANCE
HCAi
OPM-0709
BY: William Staehlin
DATE: 07/19/2025
CALIFORNIA BUILDING CODE 2022

CABLE KIT CAPACITIES (LRFD)			
KIT NUMBER	MAX CABLE TENSION, T_{CABLE}	TAG COLOR	CABLE DIAMETER
GS10	400 LBS	RED	5/64"
GS12	945 LBS	GREEN	1/8"
GS19	2265 LBS	YELLOW	3/16"
GS25	3570 LBS	PURPLE	1/4"

NOTES:

1. HAND-TIGHTEN CABLES TO REMOVE SLACK. CABLE MUST NOT SUSTAIN ANY DEAD LOAD.
2. SEE PAGE 4.1 FOR ROD STIFFENER DETAIL & REQUIREMENTS.
3. LOOSE STANDARD OR RETROFIT BRACKET SHOULD ALWAYS BE INSTALLED AT THE EQUIPMENT LEVEL. SEE PAGES 4.4 & 4.5 FOR BRACKETS.
4. BUILDING STRUCTURE AT ANCHOR LOCATIONS MUST BE POINT LOAD CAPABLE. VERIFY LOADING W/ S.E.O.R. FOR THE PROJECT.
5. LEAVE 2" TAIL EXTENDING OUT OF GRIPPLE SEISMIC FASTENER FOR FUTURE ADJUSTMENTS.
6. SEE SECTION 5 FOR DESIGN TABLES INCLUDING VALUES OF d_r AND θ.

BRACING KIT		PART NO.
QUANTITY	COMPONENT	
4	UPPER END FITTING	GSE, GSS
4	PRE-STRETCHED CABLE	-
4	GRIPPLE SEISMIC FASTENER	GS10, GS12 GS19, GS25
4	LOWER BRACKET	GSR, GSS

GRIPPLE®
Gripple Inc
1611 Emily Lane
Aurora, IL 60502
T: +1 866 474 7753
E: grippleinc@gripple.com

MRAghhi

Mahmoud Faghihi, PE, SE
California SE No. S5789

PAGE NUMBER: 2.9

DATE 7/11/2025

CABLE BRACING SYSTEM - TRAPEZE - TRANSVERSE
FLAT OR OVAL DUCT

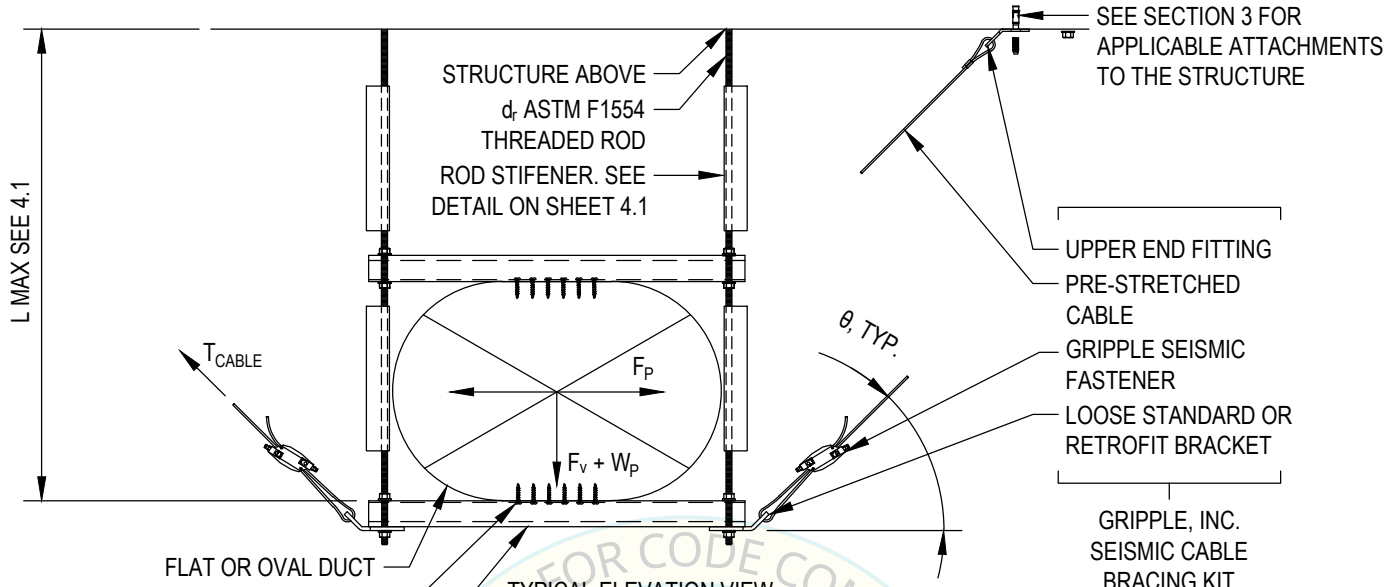

TYPICAL ELEVATION VIEW

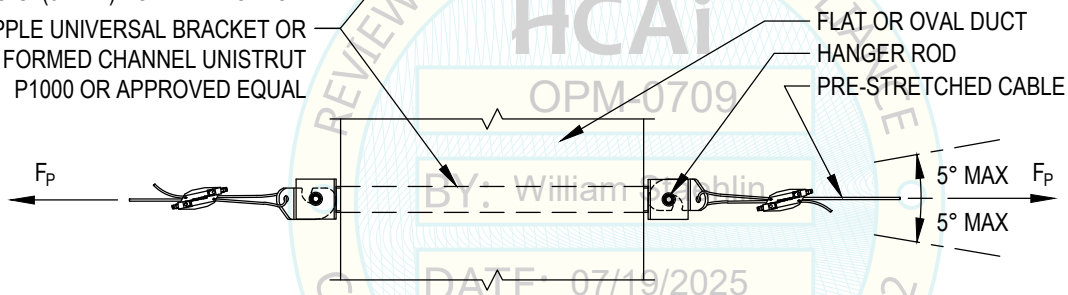

TYPICAL PLAN VIEW

REVIEWED FOR CODE COMPLIANCE
HCAi
OPM-0709
BY: William Staehlin
DATE: 07/19/2025
CALIFORNIA BUILDING CODE 2022

CABLE KIT CAPACITIES (LRFD)			
KIT NUMBER	MAX CABLE TENSION, T_{CABLE}	TAG COLOR	CABLE DIAMETER
GS10	400 LBS	RED	5/64"
GS12	945 LBS	GREEN	1/8"
GS19	2265 LBS	YELLOW	3/16"
GS25	3570 LBS	PURPLE	1/4"

BRACING KIT		PART NO.
QUANTITY	COMPONENT	
2	UPPER END FITTING	GSE, GSS
2	PRE-STRETCHED CABLE	-
2	GRIPPLE SEISMIC FASTENER	GS10, GS12 GS19, GS25
2	LOWER BRACKET	GSR, GSS

NOTES:

1. HAND-TIGHTEN CABLES TO REMOVE SLACK. CABLE MUST NOT SUSTAIN ANY DEAD LOAD.
2. SEE PAGE 4.1 FOR ROD STIFFENER DETAIL & REQUIREMENTS.
3. LOOSE STANDARD OR RETROFIT BRACKET SHOULD ALWAYS BE INSTALLED AT THE EQUIPMENT LEVEL. SEE PAGES 4.4 & 4.5 FOR BRACKETS.
4. BUILDING STRUCTURE AT ANCHOR LOCATIONS MUST BE POINT LOAD CAPABLE. VERIFY LOADING W/ S.E.O.R. FOR THE PROJECT.
5. LEAVE 2" TAIL EXTENDING OUT OF GRIPPLE SEISMIC FASTENER FOR FUTURE ADJUSTMENTS.
6. SEE SECTION 5 FOR DESIGN TABLES INCLUDING VALUES OF d_r AND θ.
7. VERTICAL HANGER RODS SHALL BE CONTINUOUS.

GRIPPLE®
Gripple Inc
1611 Emily Lane
Aurora, IL 60502
T: +1 866 474 7753
E: grippleinc@gripple.com

Mahmoud Faghihi, PE, SE
California SE No. S5789

PAGE NUMBER: 2.10

DATE 7/11/2025

CABLE BRACING SYSTEM - TRAPEZE - LONGITUDINAL
FLAT OR OVAL DUCT

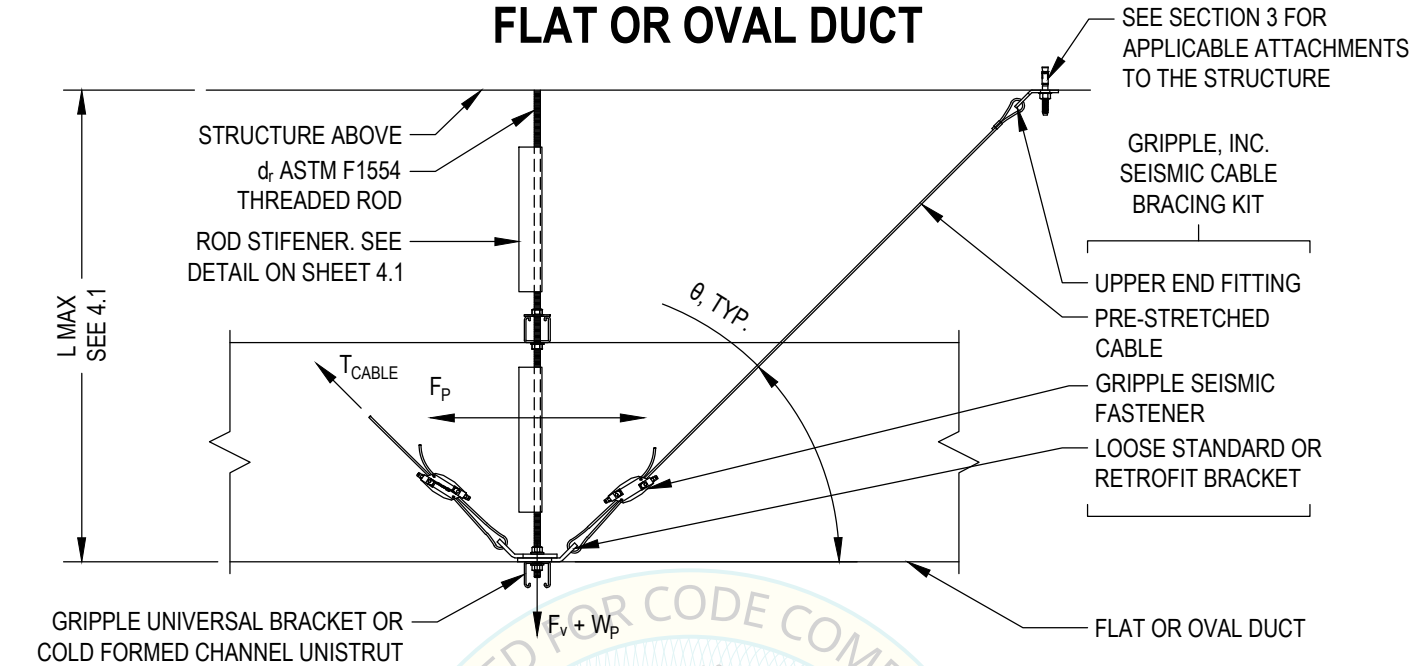

TYPICAL ELEVATION VIEW

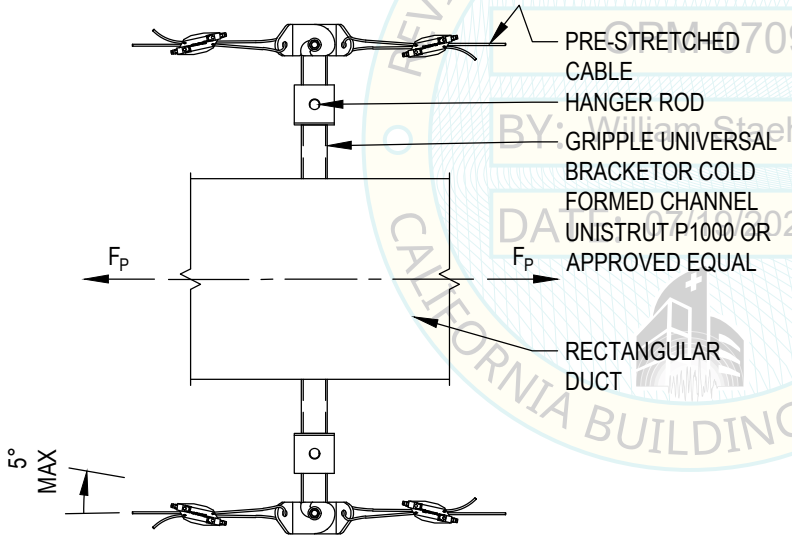

TYPICAL PLAN VIEW

CABLE KIT CAPACITIES (LRFD)			
KIT NUMBER	MAX CABLE TENSION, T_{CABLE}	TAG COLOR	CABLE DIAMETER
GS10	400 LBS	RED	5/64"
GS12	945 LBS	GREEN	1/8"
GS19	2265 LBS	YELLOW	3/16"
GS25	3570 LBS	PURPLE	1/4"

BRACING KIT		PART NO.
QUANTITY	COMPONENT	
4	UPPER END FITTING	GSE, GSS
4	PRE-STRETCHED CABLE	-
4	GRIPPLE SEISMIC FASTENER	GS10, GS12 GS19, GS25
4	LOWER BRACKET	GSR, GSS

NOTES:

1. HAND-TIGHTEN CABLES TO REMOVE SLACK. CABLE MUST NOT SUSTAIN ANY DEAD LOAD.
2. SEE PAGE 4.1 FOR ROD STIFFENER DETAIL & REQUIREMENTS.
3. LOOSE STANDARD OR RETROFIT BRACKET SHOULD ALWAYS BE INSTALLED AT THE EQUIPMENT LEVEL. SEE PAGES 4.4 & 4.5 FOR BRACKETS.
4. BUILDING STRUCTURE AT ANCHOR LOCATIONS MUST BE POINT LOAD CAPABLE. VERIFY LOADING W/ S.E.O.R. FOR THE PROJECT.
5. LEAVE 2" TAIL EXTENDING OUT OF GRIPPLE SEISMIC FASTENER FOR FUTURE ADJUSTMENTS.
6. SEE SECTION 5 FOR DESIGN TABLES INCLUDING VALUES OF d_r AND θ.
7. VERTICAL HANGER RODS SHALL BE CONTINUOUS.

GRIPPLE®

Gripple Inc
1611 Emily Lane
Aurora, IL 60502

T: +1 866 474 7753
E: grippleinc@gripple.com

Mahmoud Faghihi, PE, SE
California SE No. S5789

PAGE NUMBER: 2.11

DATE 7/11/2025

REVIEWED FOR CODE COMPLIANCE
HCAI
OPM-0709
BY: William Staehlin
DATE: 07/19/2025
CALIFORNIA BUILDING CODE, 2022

CABLE BRACING SYSTEM - TRAPEZE - 4 WAY
FLAT OR OVAL DUCT

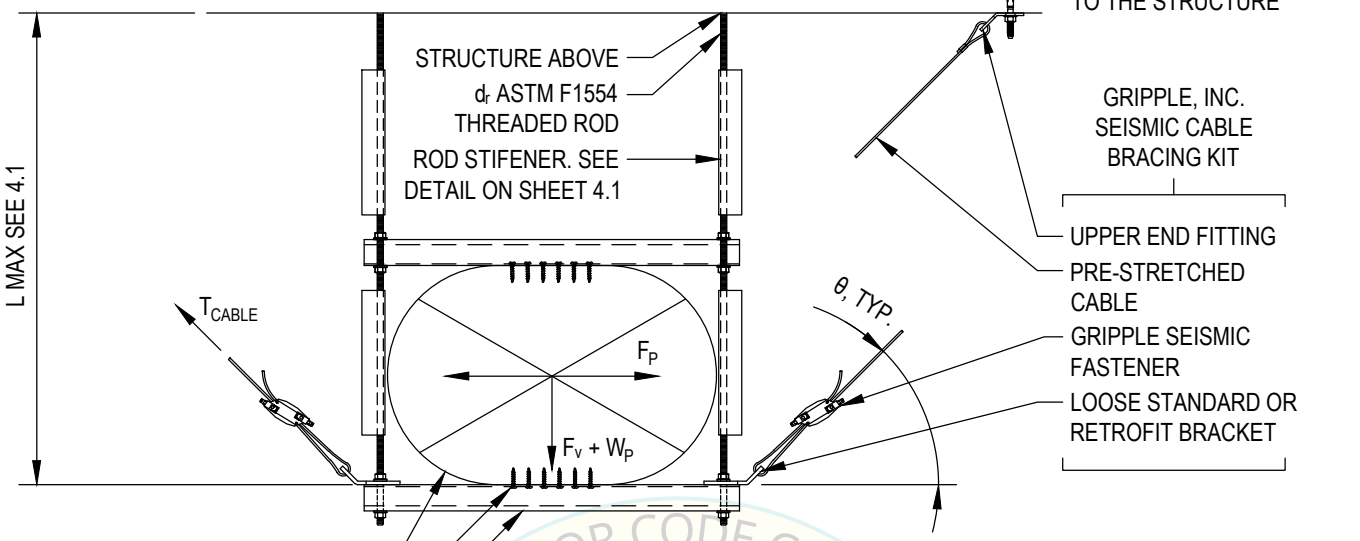

FLAT OR OVAL DUCT

#12 TEKS SCREWS SPACED AT 8" O.C. (6 MIN.) TOP AND BOTTOM

GRIPPLE UNIVERSAL BRACKET OR COLD FORMED CHANNEL UNISTRUT P1000 OR APPROVED EQUAL

TYPICAL ELEVATION VIEW

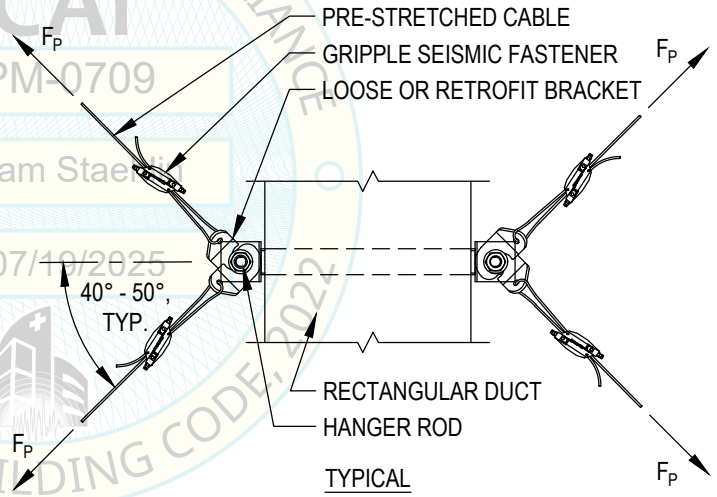

TYPICAL PLAN VIEW

REVIEWED FOR CODE COMPLIANCE
HCAi
OPM-0709
BY: William Staehlin
DATE: 07/10/2025
CALIFORNIA BUILDING CODE, 2022

CABLE KIT CAPACITIES (LRFD)			
KIT NUMBER	MAX CABLE TENSION, T_{CABLE}	TAG COLOR	CABLE DIAMETER
GS10	400 LBS	RED	5/64"
GS12	945 LBS	GREEN	1/8"
GS19	2265 LBS	YELLOW	3/16"
GS25	3570 LBS	PURPLE	1/4"

NOTES:

1. HAND-TIGHTEN CABLES TO REMOVE SLACK. CABLE MUST NOT SUSTAIN ANY DEAD LOAD.
2. SEE PAGE 4.1 FOR ROD STIFFENER DETAIL & REQUIREMENTS.
3. CRIMPED CABLE END FITTING SHOULD ALWAYS BE INSTALLED AT THE STRUCTURE ABOVE. LOOSE STANDARD OR RETROFIT BRACKET SHOULD ALWAYS BE INSTALLED AT THE EQUIPMENT LEVEL. SEE PAGES 4.4 & 4.5 FOR BRACKETS.
4. BUILDING STRUCTURE AT ANCHOR LOCATIONS MUST BE POINT LOAD CAPABLE. VERIFY LOADING W/ S.E.O.R. FOR THE PROJECT.
5. LEAVE 2" TAIL EXTENDING OUT OF GRIPPLE SEISMIC FASTENER FOR FUTURE ADJUSTMENTS.
6. SEE SECTION 5 FOR DESIGN TABLES INCLUDING VALUES OF d_r AND θ.
7. VERTICAL HANGER RODS SHALL BE CONTINUOUS.

BRACING KIT		PART NO.
QUANTITY	COMPONENT	
4	UPPER END FITTING	GSE, GSS
4	PRE-STRETCHED CABLE	-
4	GRIPPLE SEISMIC FASTENER	GS10, GS12 GS19, GS25
4	LOWER BRACKET	GSR, GSS

GRIPPLE®
Gripple Inc
1611 Emily Lane
Aurora, IL 60502
T: +1 866 474 7753
E: grippleinc@gripple.com

Mahmoud Faghihi, PE, SE
California SE No. S5789

PAGE NUMBER: 2.12

DATE 7/11/2025

CABLE BRACING SYSTEM - TRAPEZE - TRANSVERSE
HUNG ELECTRICAL CABLE TRAY/RACEWAY

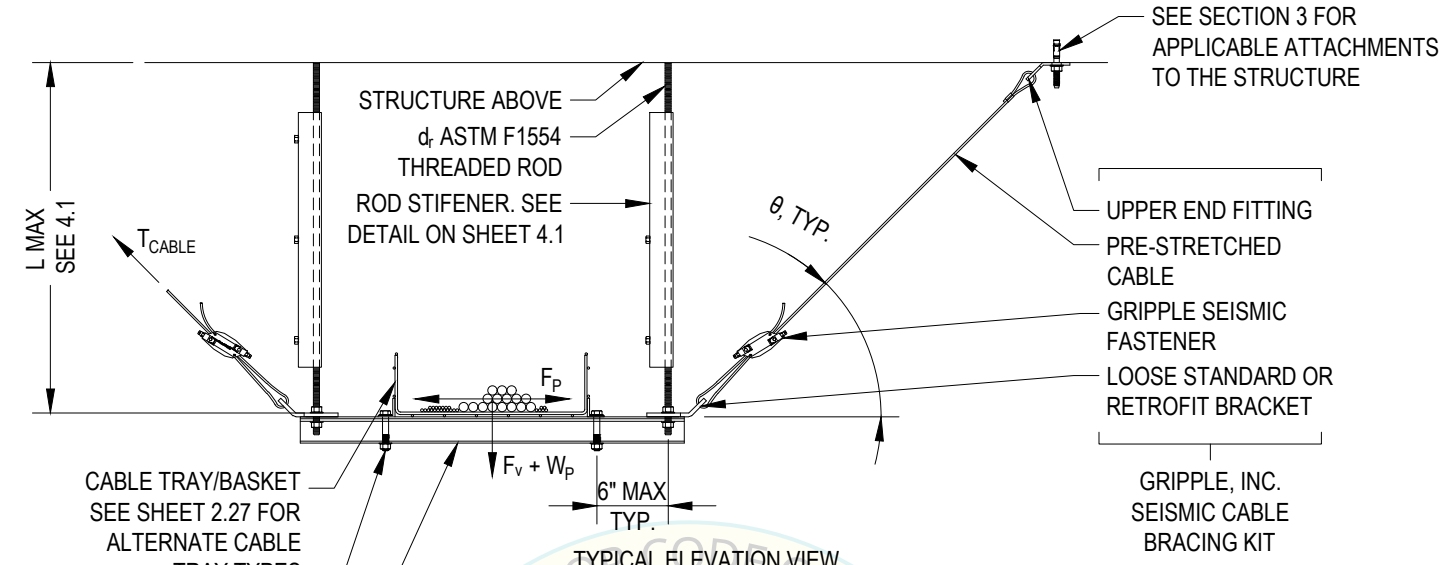

TYPICAL ELEVATION VIEW

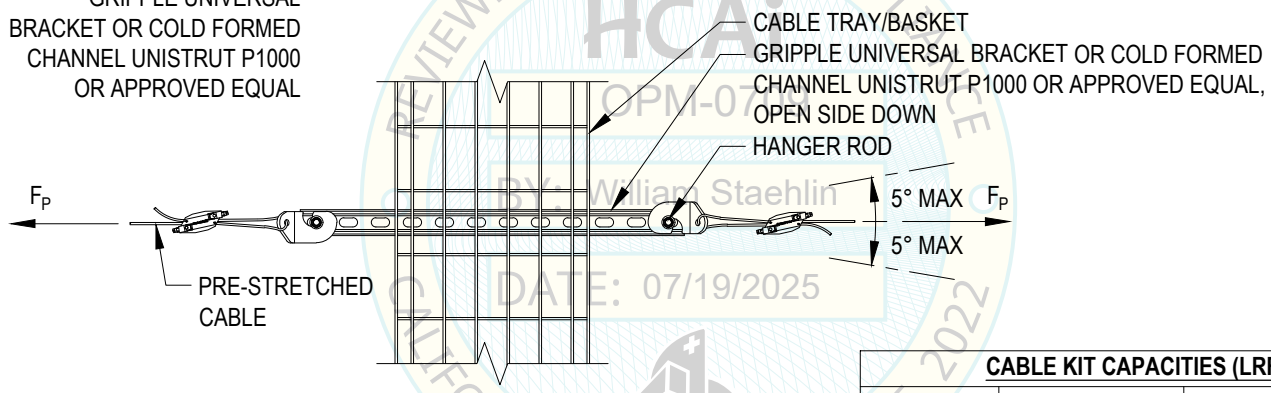

TYPICAL PLAN VIEW

REVIEWED FOR CODE COMPLIANCE
HCAI
OPM-0709
BY: William Staehlin
DATE: 07/19/2025
CALIFORNIA BUILDING CODE 2022

CABLE KIT CAPACITIES (LRFD)			
KIT NUMBER	MAX CABLE TENSION, T_{CABLE}	TAG COLOR	CABLE DIAMETER
GS10	400 LBS	RED	5/64"
GS12	945 LBS	GREEN	1/8"
GS19	2265 LBS	YELLOW	3/16"
GS25	3570 LBS	PURPLE	1/4"

NOTES:

1. HAND-TIGHTEN CABLES TO REMOVE SLACK. CABLE MUST NOT SUSTAIN ANY DEAD LOAD.
2. SEE PAGE S4.1 FOR ROD STIFFENER DETAIL & REQUIREMENTS.
3. LOOSE STANDARD OR RETROFIT BRACKET SHOULD ALWAYS BE INSTALLED AT THE EQUIPMENT LEVEL. SEE PAGES 4.4 & 4.5 FOR BRACKETS.
4. BUILDING STRUCTURE AT ANCHOR LOCATIONS MUST BE POINT LOAD CAPABLE. VERIFY LOADING W/ S.E.O.R. FOR THE PROJECT.
5. LEAVE 2" TAIL EXTENDING OUT OF GRIPPLE SEISMIC FASTENER FOR FUTURE ADJUSTMENTS.
6. SEE SECTION 5 FOR DESIGN TABLES INCLUDING VALUES OF d_r AND θ.

BRACING KIT		PART NO.
QUANTITY	COMPONENT	
2	UPPER END FITTING	GSE, GSS
2	PRE-STRETCHED CABLE	-
2	GRIPPLE SEISMIC FASTENER	GS10, GS12 GS19, GS25
2	LOWER BRACKET	GSR, GSS

GRIPPLE®
Gripple Inc
1611 Emily Lane
Aurora, IL 60502
T: +1 866 474 7753
E: grippleinc@gripple.com

Mahmoud Faghihi, PE, SE
California SE No. S5789

PAGE NUMBER: 2.13

DATE 7/11/2025

CABLE BRACING SYSTEM - TRAPEZE - LONGITUDINAL
HUNG ELECTRICAL CABLE TRAY/RACEWAY

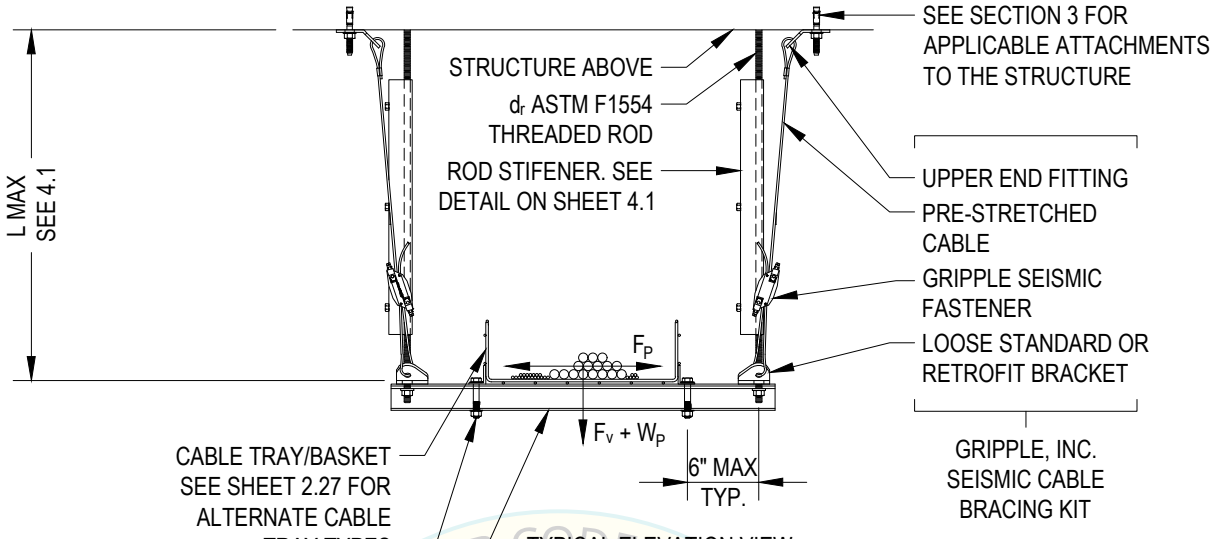

TYPICAL ELEVATION VIEW

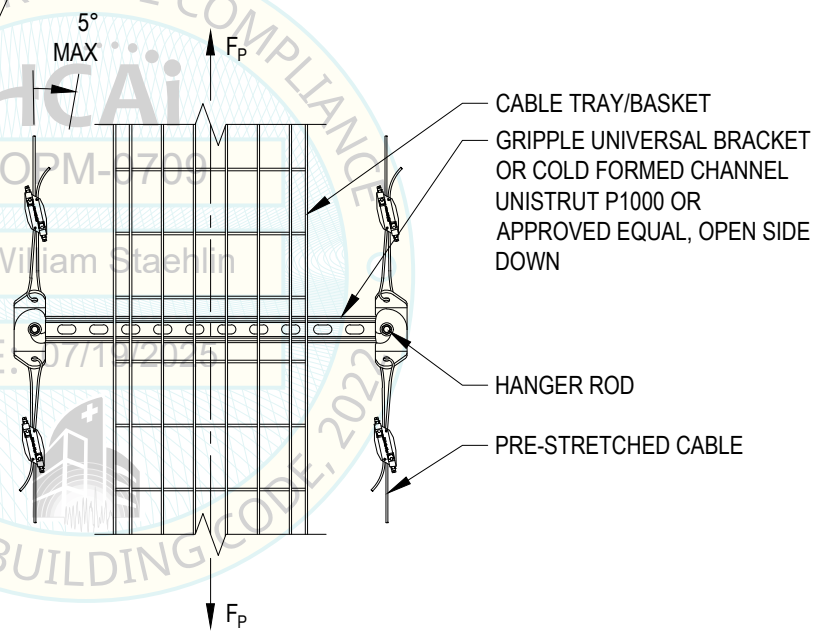

HCAi
OPM-0709
BY: William Staehlin
DATE: 07/19/2025
REVIEWED FOR CODE COMPLIANCE
CALIFORNIA BUILDING CODE, 2022

CABLE KIT CAPACITIES (LRFD)			
KIT NUMBER	MAX CABLE TENSION, T_{CABLE}	TAG COLOR	CABLE DIAMETER
GS10	400 LBS	RED	5/64"
GS12	945 LBS	GREEN	1/8"
GS19	2265 LBS	YELLOW	3/16"
GS25	3570 LBS	PURPLE	1/4"

NOTES:

1. HAND-TIGHTEN CABLES TO REMOVE SLACK. CABLE MUST NOT SUSTAIN ANY DEAD LOAD.
2. SEE PAGE 4.1 FOR ROD STIFFENER DETAIL & REQUIREMENTS.
3. LOOSE STANDARD OR RETROFIT BRACKET SHOULD ALWAYS BE INSTALLED AT THE EQUIPMENT LEVEL. SEE PAGES 4.1 & 4.5 FOR BRACKETS.
4. BUILDING STRUCTURE AT ANCHOR LOCATIONS MUST BE POINT LOAD CAPABLE. VERIFY LOADING W/ S.E.O.R. FOR THE PROJECT.
5. LEAVE 2" TAIL EXTENDING OUT OF GRIPPLE SEISMIC FASTENER FOR FUTURE ADJUSTMENTS.
6. SEE SECTION 5 FOR DESIGN TABLES INCLUDING VALUES OF d_r AND θ .

BRACING KIT		PART NO.
QUANTITY	COMPONENT	
4	UPPER END FITTING	GSE, GSS
4	PRE-STRETCHED CABLE	-
4	GRIPPLE SEISMIC FASTENER	GS10, GS12 GS19, GS25
4	LOWER BRACKET	GSR, GSS

GRIPPLE®
Gripple Inc
1611 Emily Lane
Aurora, IL 60502
T: +1 866 474 7753
E: grippleinc@gripple.com

Mahmoud Faghihi, PE, SE
California SE No. S5789

PAGE NUMBER: 2.14

DATE 7/11/2025

CABLE BRACING SYSTEM - TRAPEZE - 4 WAY
HUNG ELECTRICAL CABLE TRAY/RACEWAY

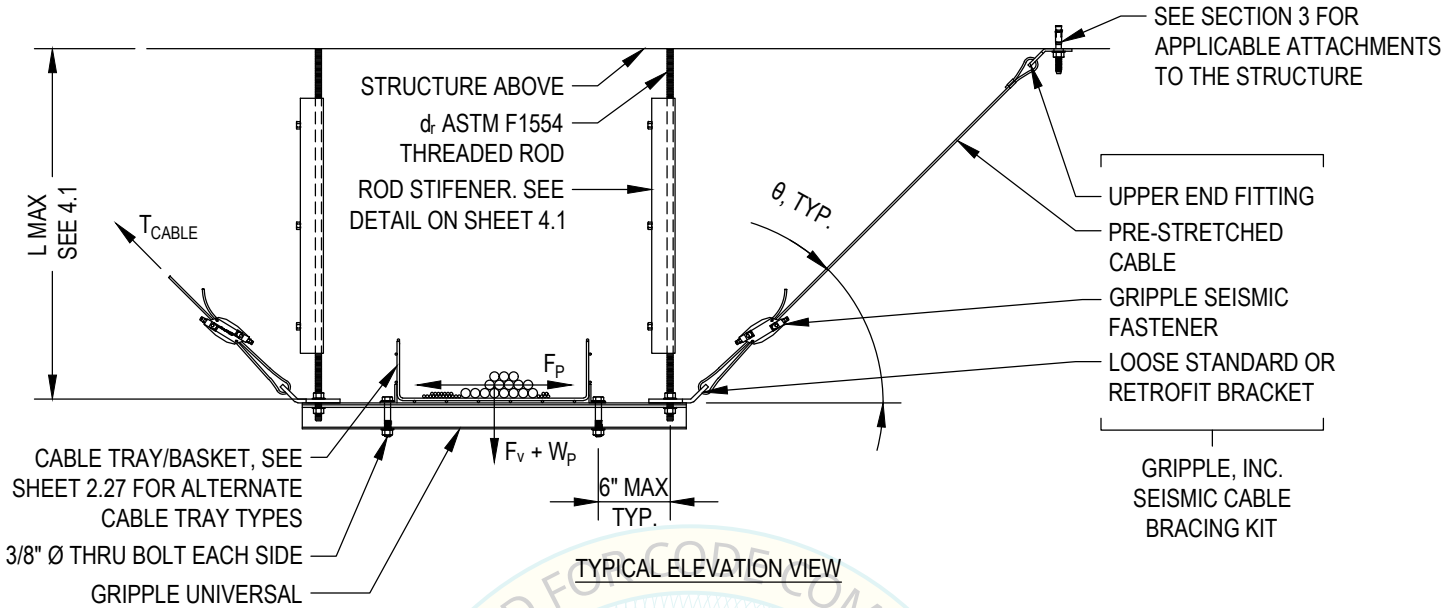

TYPICAL ELEVATION VIEW

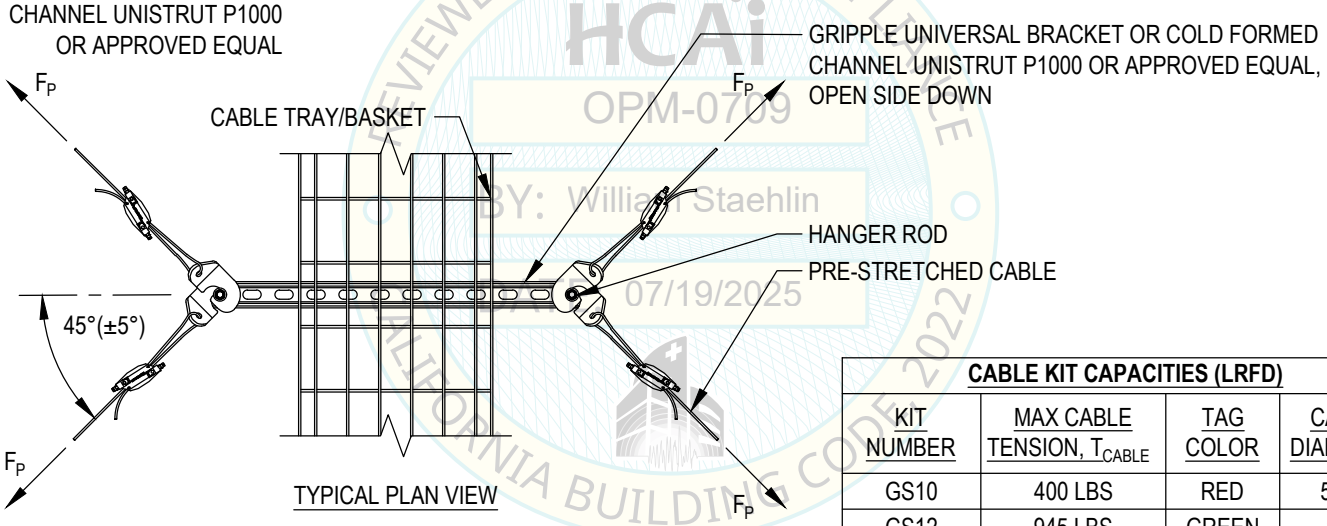

TYPICAL PLAN VIEW

REVIEWED FOR CODE COMPLIANCE
HCAi
OPM-0709
BY: William Staehlin
DATE: 07/19/2025
CALIFORNIA BUILDING CODE 2022

CABLE KIT CAPACITIES (LRFD)			
KIT NUMBER	MAX CABLE TENSION, T_{CABLE}	TAG COLOR	CABLE DIAMETER
GS10	400 LBS	RED	5/64"
GS12	945 LBS	GREEN	1/8"
GS19	2265 LBS	YELLOW	3/16"
GS25	3570 LBS	PURPLE	1/4"

NOTES:
1. HAND-TIGHTEN CABLES TO REMOVE SLACK. CABLE MUST NOT SUSTAIN ANY DEAD LOAD.
2. SEE PAGE 4.1 FOR ROD STIFFENER DETAIL & REQUIREMENTS.
3. LOOSE STANDARD OR RETROFIT BRACKET SHOULD ALWAYS BE INSTALLED AT THE EQUIPMENT LEVEL. SEE PAGES 4.4 & 4.5 FOR BRACKETS.
4. BUILDING STRUCTURE AT ANCHOR LOCATIONS MUST BE POINT LOAD CAPABLE. VERIFY LOADING W/ S.E.O.R. FOR THE PROJECT.
5. LEAVE 2" TAIL EXTENDING OUT OF GRIPPLE SEISMIC FASTENER FOR FUTURE ADJUSTMENTS.
6. SEE SECTION 5 FOR DESIGN TABLES INCLUDING VALUES OF d_r AND θ.

BRACING KIT		PART NO.
QUANTITY	COMPONENT	
4	UPPER END FITTING	GSE, GSS
4	PRE-STRETCHED CABLE	-
4	GRIPPLE SEISMIC FASTENER	GS10, GS12 GS19, GS25
4	LOWER BRACKET	GSR, GSS

GRIPPLE®
Gripple Inc
1611 Emily Lane
Aurora, IL 60502
T: +1 866 474 7753
E: grippleinc@gripple.com

Mahmoud Faghihi, PE, SE
California SE No. S5789

PAGE NUMBER: 2.15

DATE 7/11/2025

CABLE BRACING SYSTEM - TRAPEZE - 4 WAY
SUSPENDED EQUIPMENT

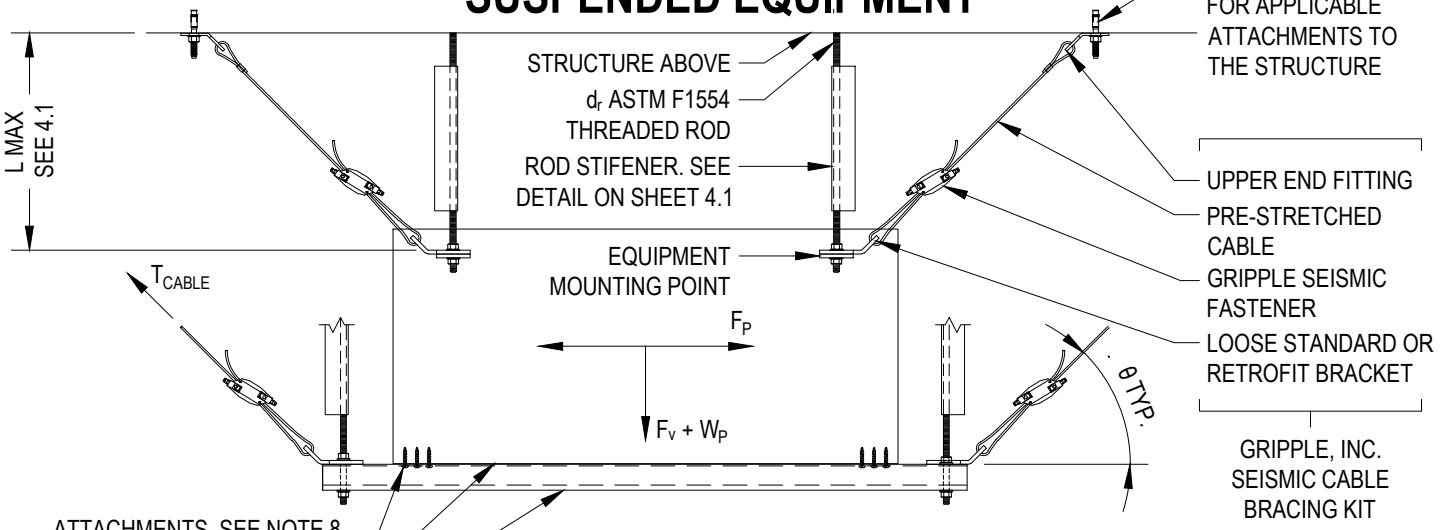

TYPICAL ELEVATION VIEW

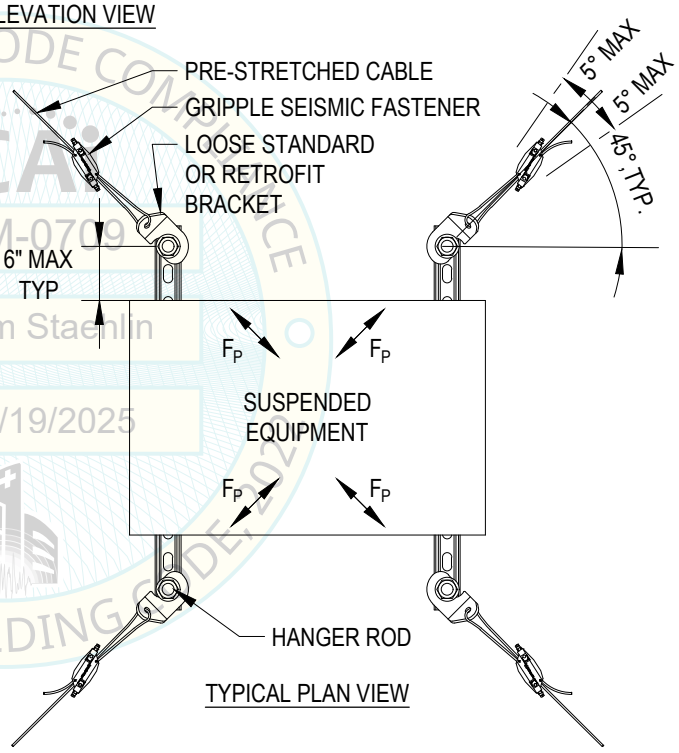

TYPICAL PLAN VIEW

CABLE KIT CAPACITIES (LRFD)			
KIT NUMBER	MAX CABLE TENSION, T_{CABLE}	TAG COLOR	CABLE DIAMETER
GS10	400 LBS	RED	5/64"
GS12	945 LBS	GREEN	1/8"
GS19	2265 LBS	YELLOW	3/16"
GS25	3570 LBS	PURPLE	1/4"

REVIEWED FOR CODE COMPLIANCE
HCAI
OPM-0709
BY: William Staehlin
DATE: 07/19/2025
CALIFORNIA BUILDING CODE, 2022

NOTES:

1. HAND-TIGHTEN CABLES TO REMOVE SLACK. CABLE MUST NOT SUSTAIN ANY DEAD LOAD.
2. SEE PAGE 4.1 FOR ROD STIFFENER DETAIL & REQUIREMENTS.
3. LOOSE STANDARD OR RETROFIT BRACKET SHOULD ALWAYS BE INSTALLED AT THE EQUIPMENT LEVEL. SEE PAGES 4.4 & 4.5 FOR BRACKETS.
4. BUILDING STRUCTURE AT ANCHOR LOCATIONS MUST BE POINT LOAD CAPABLE. VERIFY LOADING W/ S.E.O.R. FOR THE PROJECT.
5. LEAVE 2" TAIL EXTENDING OUT OF GRIPPLE SEISMIC FASTENER FOR FUTURE ADJUSTMENTS.
6. SEE SECTION 5 FOR DESIGN TABLES INCLUDING VALUES OF d_r AND θ.
7. SUPPORT MEMBERS UNDERNEATH AND THE CONNECTION TO THE EQUIPMENT MUST BE DESIGNED AND SUBMITTED TO OSHPD FOR APPROVAL. MINIMUM THICKNESS SHALL BE 12 GA WITH A MINIMUM YIELD STRENGHT OF 33 KSI.

BRACING KIT		PART NO.
QUANTITY	COMPONENT	
4	UPPER END FITTING	GSE, GSS
4	PRE-STRETCHED CABLE	-
4	GRIPPLE SEISMIC FASTENER	GS10, GS12 GS19, GS25
4	LOWER BRACKET	GSR, GSS

GRIPPLE®
Gripple Inc
1611 Emily Lane
Aurora, IL 60502
T: +1 866 474 7753
E: grippleinc@gripple.com

Mahmoud Faghihi, PE, SE
California SE No. S5789

PAGE NUMBER: 2.16

DATE 7/11/2025

CABLE BRACING SYSTEM - TRANSVERSE - TRAPEZE SUPPORTED PIPING AND/OR CONDUIT

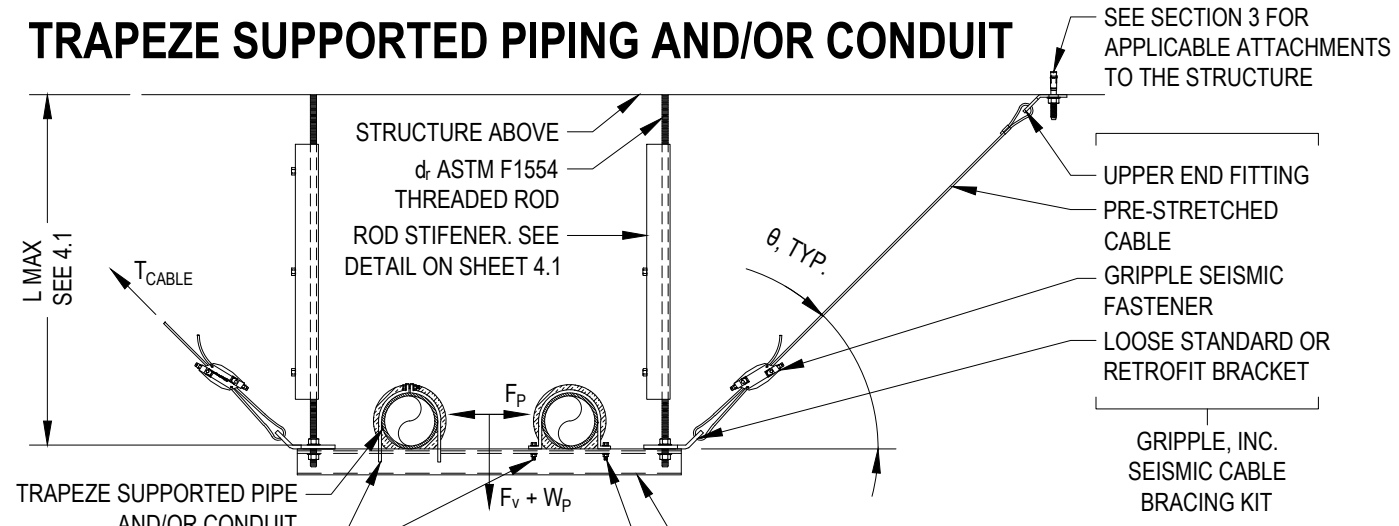

TYPICAL ELEVATION VIEW

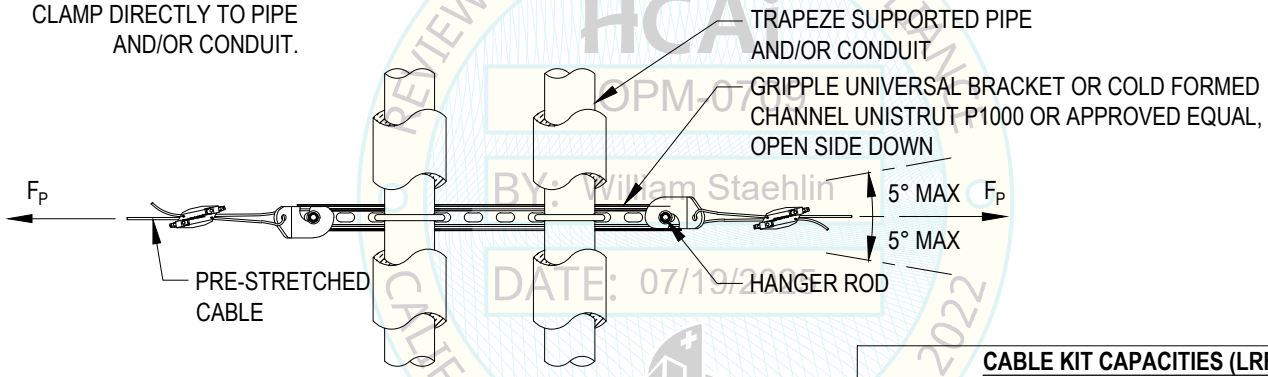

TYPICAL PLAN VIEW

REVIEWED FOR CODE COMPLIANCE
HCAI
OPM-0709
BY: William Staehlin
DATE: 07/19/2025
CALIFORNIA BUILDING CODE 2022

CABLE KIT CAPACITIES (LRFD)			
KIT NUMBER	MAX CABLE TENSION, T_{CABLE}	TAG COLOR	CABLE DIAMETER
GS10	400 LBS	RED	5/64"
GS12	945 LBS	GREEN	1/8"
GS19	2265 LBS	YELLOW	3/16"
GS25	3570 LBS	PURPLE	1/4"

NOTES:

1. HAND-TIGHTEN CABLES TO REMOVE SLACK. CABLE MUST NOT SUSTAIN ANY DEAD LOAD.
2. SEE PAGE 4.1 FOR ROD STIFFENER DETAIL & REQUIREMENTS.
3. LOOSE STANDARD OR RETROFIT BRACKET SHOULD ALWAYS BE INSTALLED AT THE EQUIPMENT LEVEL. SEE PAGES 4.4 & 4.5 FOR BRACKETS.
4. BUILDING STRUCTURE AT ANCHOR LOCATIONS MUST BE POINT LOAD CAPABLE. VERIFY LOADING W/ S.E.O.R. FOR THE PROJECT.
5. LEAVE 2" TAIL EXTENDING OUT OF GRIPPLE SEISMIC FASTENER FOR FUTURE ADJUSTMENTS.
6. SEE SECTION 5 FOR DESIGN TABLES INCLUDING VALUES OF d_r AND θ.

BRACING KIT		PART NO.
QUANTITY	COMPONENT	
2	UPPER END FITTING	GSE, GSS
2	PRE-STRETCHED CABLE	-
2	GRIPPLE SEISMIC FASTENER	GS10, GS12 GS19, GS25
2	LOWER BRACKET	GSR, GSS

GRIPPLE®
Gripple Inc
1611 Emily Lane
Aurora, IL 60502
T: +1 866 474 7753
E: grippleinc@gripple.com

Mahmoud Faghihi, PE, SE
California SE No. S5789

PAGE NUMBER: 2.17

DATE 7/11/2025

CABLE BRACING SYSTEM - LONGITUDINAL - TRAPEZE SUPPORTED PIPING AND/OR CONDUIT

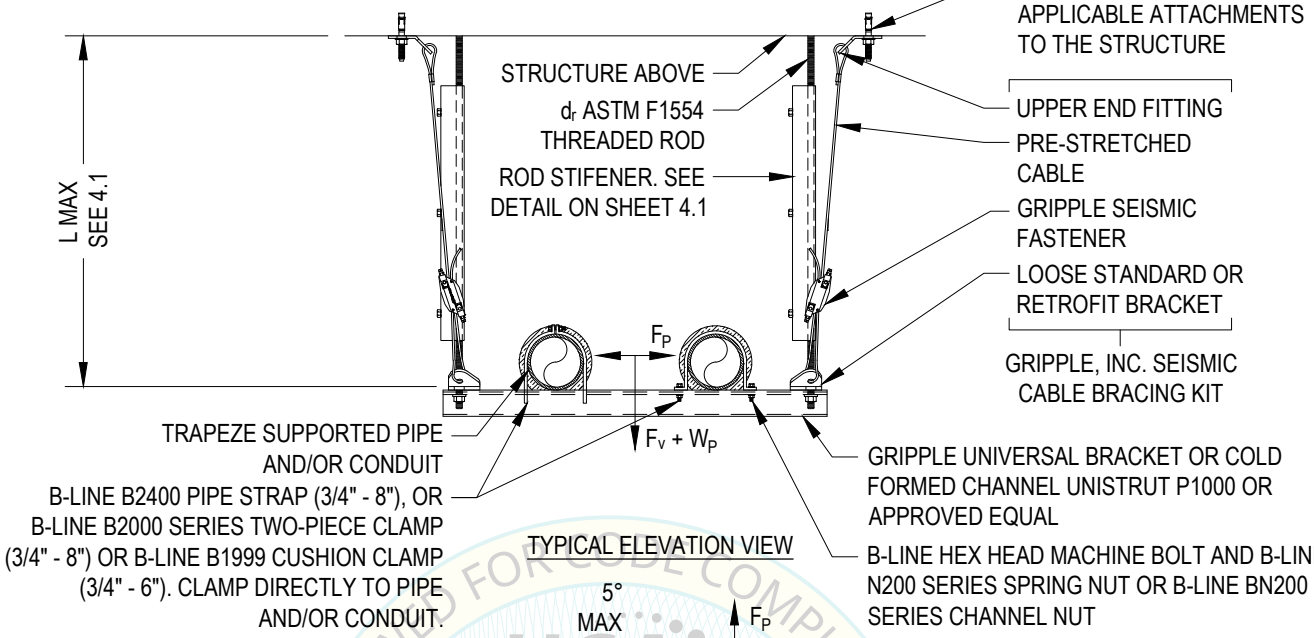

TYPICAL ELEVATION VIEW

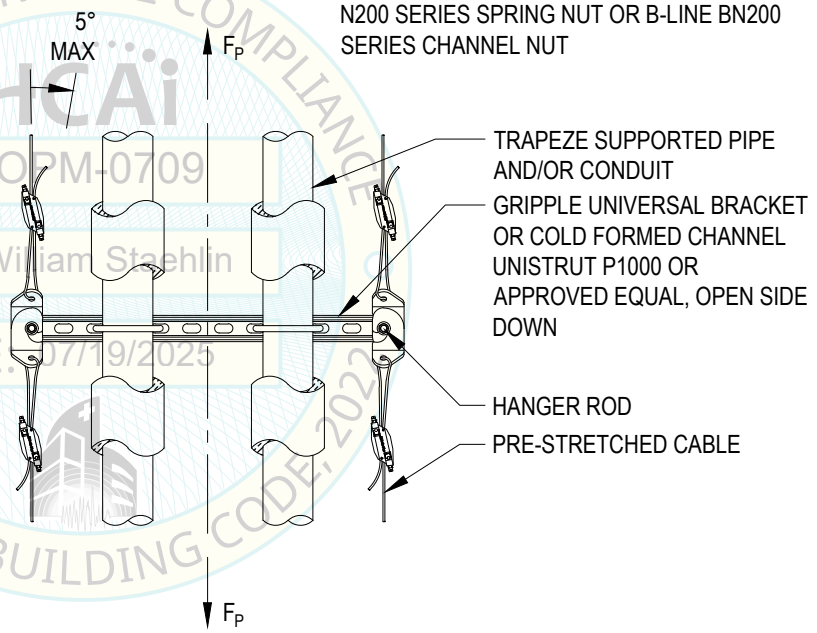

REVIEWED FOR CODE COMPLIANCE
HCAi
OPM-0709
BY: William Staehlin
DATE: 07/19/2025
CALIFORNIA BUILDING CODE, 2022

CABLE KIT CAPACITIES (LRFD)			
KIT NUMBER	MAX CABLE TENSION, T_{CABLE}	TAG COLOR	CABLE DIAMETER
GS10	400 LBS	RED	5/64"
GS12	945 LBS	GREEN	1/8"
GS19	2265 LBS	YELLOW	3/16"
GS25	3570 LBS	PURPLE	1/4"

NOTES:

1. HAND-TIGHTEN CABLES TO REMOVE SLACK. CABLE MUST NOT SUSTAIN ANY DEAD LOAD.
2. SEE PAGE 4.1 FOR ROD STIFFENER DETAIL & REQUIREMENTS.
3. LOOSE STANDARD OR RETROFIT BRACKET SHOULD ALWAYS BE INSTALLED AT THE EQUIPMENT LEVEL. SEE PAGES 4.4 & 4.5 FOR BRACKETS.
4. BUILDING STRUCTURE AT ANCHOR LOCATIONS MUST BE POINT LOAD CAPABLE. VERIFY LOADING W/ S.E.O.R. FOR THE PROJECT.
5. LEAVE 2" TAIL EXTENDING OUT OF GRIPPLE SEISMIC FASTENER FOR FUTURE ADJUSTMENTS.
6. SEE SECTION 5 FOR DESIGN TABLES INCLUDING VALUES OF d_r AND θ.

BRACING KIT		PART NO.
QUANTITY	COMPONENT	
4	UPPER END FITTING	GSE, GSS
4	PRE-STRETCHED CABLE	-
4	GRIPPLE SEISMIC FASTENER	GS10, GS12 GS19, GS25
4	LOWER BRACKET	GSR, GSS

GRIPPLE®
Gripple Inc
1611 Emily Lane
Aurora, IL 60502
T: +1 866 474 7753
E: grippleinc@gripple.com

Mahmoud Faghihi, PE, SE
California SE No. S5789

PAGE NUMBER: 2.18

DATE 7/11/2025

CABLE BRACING SYSTEM - 4 WAY - TRAPEZE SUPPORTED PIPING AND/OR CONDUIT

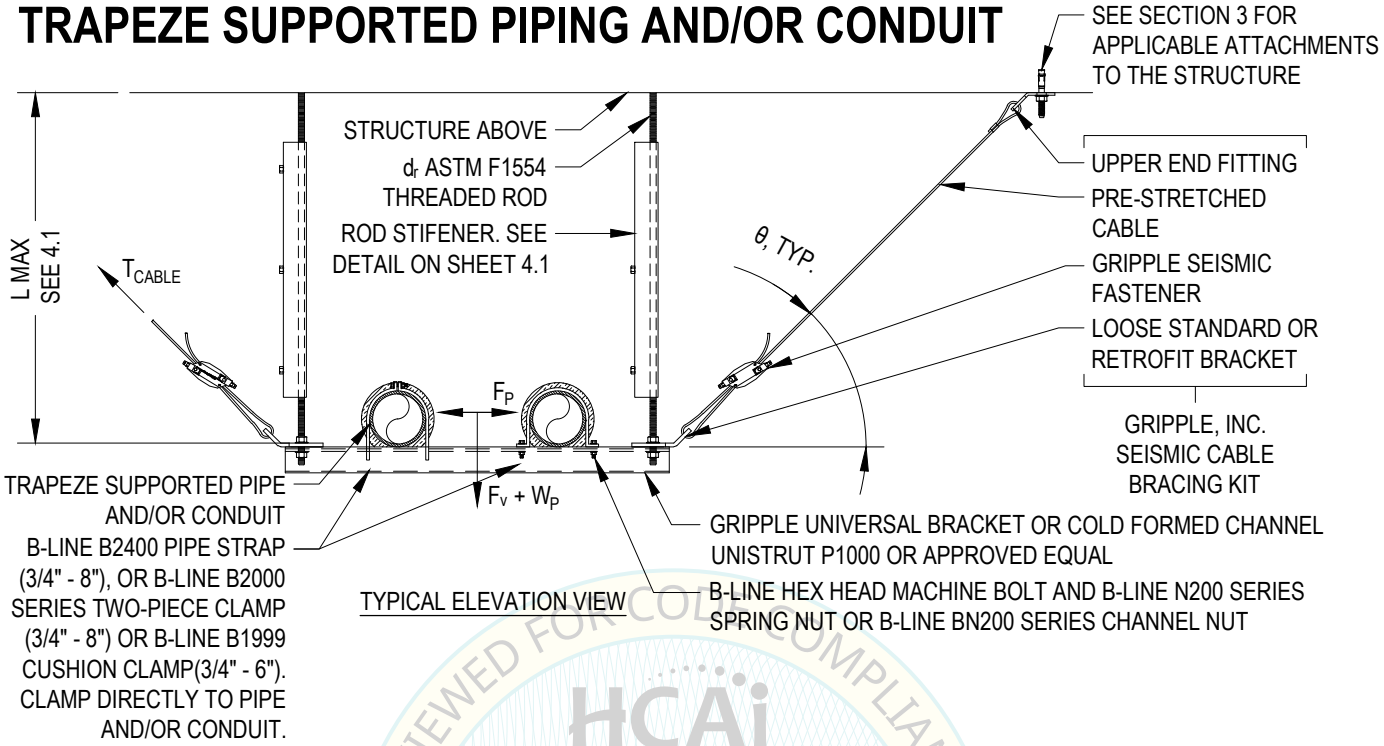

TYPICAL ELEVATION VIEW

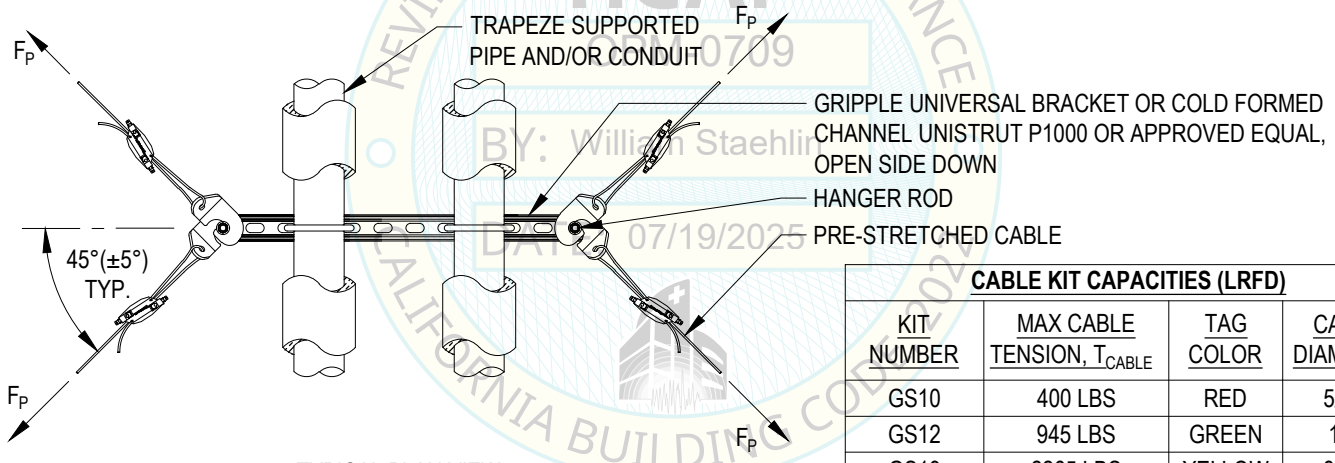

TYPICAL PLAN VIEW

CABLE KIT CAPACITIES (LRFD)			
KIT NUMBER	MAX CABLE TENSION, T_{CABLE}	TAG COLOR	CABLE DIAMETER
GS10	400 LBS	RED	5/64"
GS12	945 LBS	GREEN	1/8"
GS19	2265 LBS	YELLOW	3/16"
GS25	3570 LBS	PURPLE	1/4"

NOTES:

1. HAND-TIGHTEN CABLES TO REMOVE SLACK. CABLE MUST NOT SUSTAIN ANY DEAD LOAD.
2. SEE PAGE 4.1 FOR ROD STIFFENER DETAIL & REQUIREMENTS.
3. LOOSE STANDARD OR RETROFIT BRACKET SHOULD ALWAYS BE INSTALLED AT THE EQUIPMENT LEVEL. SEE PAGES 4.4 & 4.5 FOR BRACKETS.
4. BUILDING STRUCTURE AT ANCHOR LOCATIONS MUST BE POINT LOAD CAPABLE. VERIFY LOADING W/ S.E.O.R. FOR THE PROJECT.
5. LEAVE 2" TAIL EXTENDING OUT OF GRIPPLE SEISMIC FASTENER FOR FUTURE ADJUSTMENTS.
6. SEE SECTION 5 FOR DESIGN TABLES INCLUDING VALUES OF d_r AND θ.

BRACING KIT		PART NO.
QUANTITY	COMPONENT	
4	UPPER END FITTING	GSE, GSS
4	PRE-STRETCHED CABLE	-
4	GRIPPLE SEISMIC FASTENER	GS10, GS12 GS19, GS25
4	LOWER BRACKET	GSR, GSS

REVIEWED FOR CODE COMPLIANCE
HCAi
OPM-0709
BY: William Staehlin
DATE: 07/19/2025
CALIFORNIA BUILDING CODE 2022

GRIPPLE®
Gripple Inc
1611 Emily Lane
Aurora, IL 60502
T: +1 866 474 7753
E: grippleinc@gripple.com

Mahmoud Faghihi, PE, SE
California SE No. S5789

PAGE NUMBER: 2.19

DATE 7/11/2025

CABLE BRACING SYSTEM - TRANSVERSE - MULTI-TIER
TRAPEZE SUPPORTED PIPING AND/OR CONDUIT

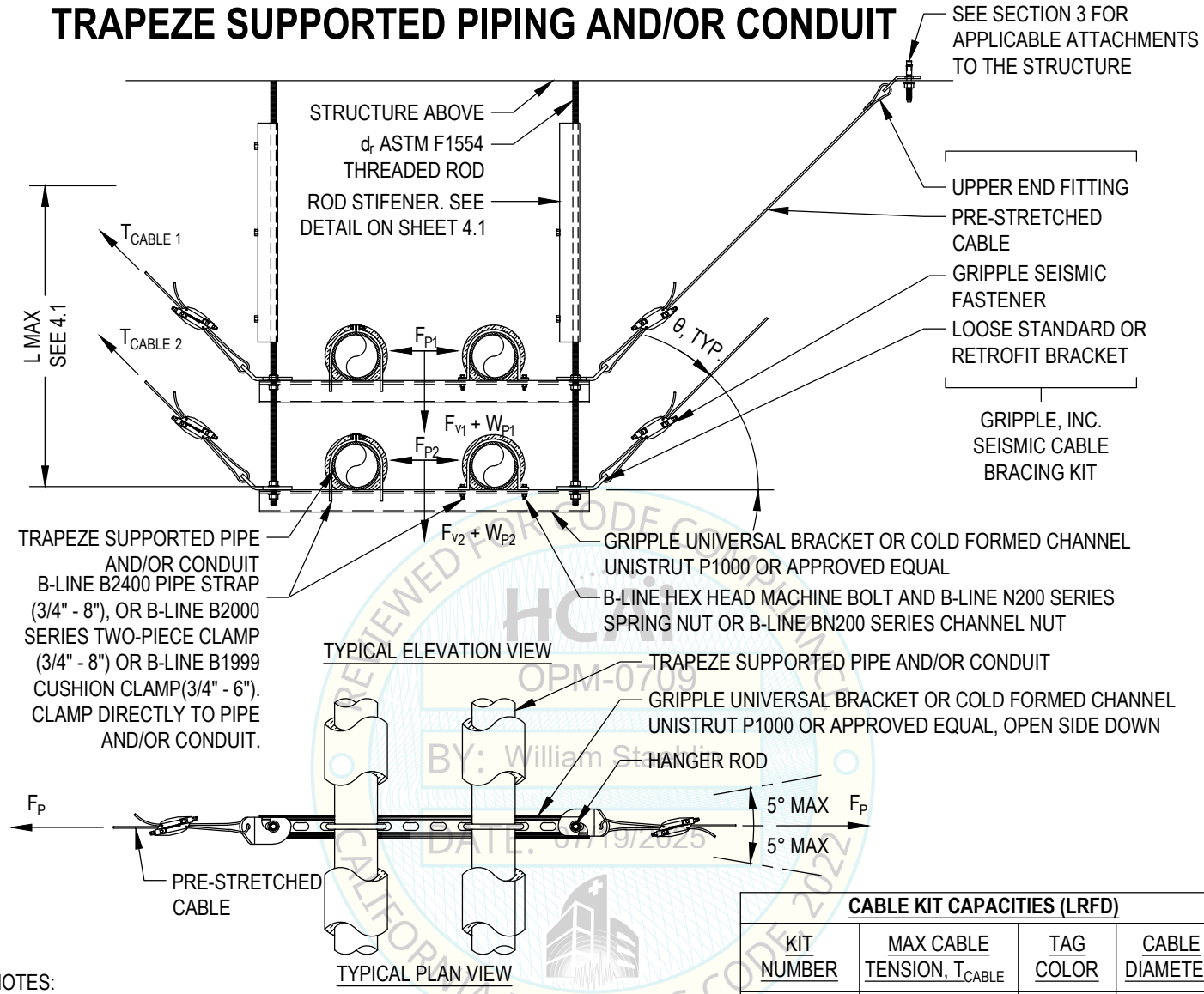

REVIEWED FOR CODE COMPLIANCE
HCAI
OPM-0709
BY: William Staehlin
DATE: 07/19/2025
CALIFORNIA BUILDING CODE 2022

CABLE KIT CAPACITIES (LRFD)			
KIT NUMBER	MAX CABLE TENSION, T_{CABLE}	TAG COLOR	CABLE DIAMETER
GS10	400 LBS	RED	5/64"
GS12	945 LBS	GREEN	1/8"
GS19	2265 LBS	YELLOW	3/16"
GS25	3570 LBS	PURPLE	1/4"

NOTES:
1. HAND-TIGHTEN CABLES TO REMOVE SLACK. CABLE MUST NOT SUSTAIN ANY DEAD LOAD.
2. SEE PAGE 4.1 FOR ROD STIFFENER DETAIL & REQUIREMENTS.
3. LOOSE STANDARD OR RETROFIT BRACKET SHOULD ALWAYS BE INSTALLED AT THE EQUIPMENT LEVEL. SEE PAGES 4.4 & 4.5 FOR BRACKETS.
4. BUILDING STRUCTURE AT ANCHOR LOCATIONS MUST BE POINT LOAD CAPABLE. VERIFY LOADING W/ S.E.O.R. FOR THE PROJECT.
5. LEAVE 2" TAIL EXTENDING OUT OF GRIPPLE SEISMIC FASTENER FOR FUTURE ADJUSTMENTS.
6. SEE SECTION 5 FOR DESIGN TABLES INCLUDING VALUES OF d_r AND θ.
7. T_{CABLE1} SHALL BE DESIGNED FOR THE TOTAL WEIGHT OF THE UPPER TIER (F_{p1}) AND T_{CABLE2} SHALL BE DESIGNED FOR THE TOTAL WEIGHT OF THE LOWER TIER (F_{p2}).
8. VERTICAL HANGER RODS SHALL BE CONTINUOUS.

BRACING KIT		PART NO.
QUANTITY	COMPONENT	
4	UPPER END FITTING	GSE, GSS
4	PRE-STRETCHED CABLE	-
4	GRIPPLE SEISMIC FASTENER	GS10, GS12 GS19, GS25
4	LOWER BRACKET	GSR, GSS

GRIPPLE®
Gripple Inc
1611 Emily Lane
Aurora, IL 60502
T: +1 866 474 7753
E: grippleinc@gripple.com

MRAghihi

Mahmoud Faghihi, PE, SE
California SE No. S5789

PAGE NUMBER: 2.20

DATE 7/11/2025

CABLE BRACING SYSTEM - LONGITUDINAL - MULTI-TIER TRAPEZE SUPPORTED PIPING AND/OR CONDUIT

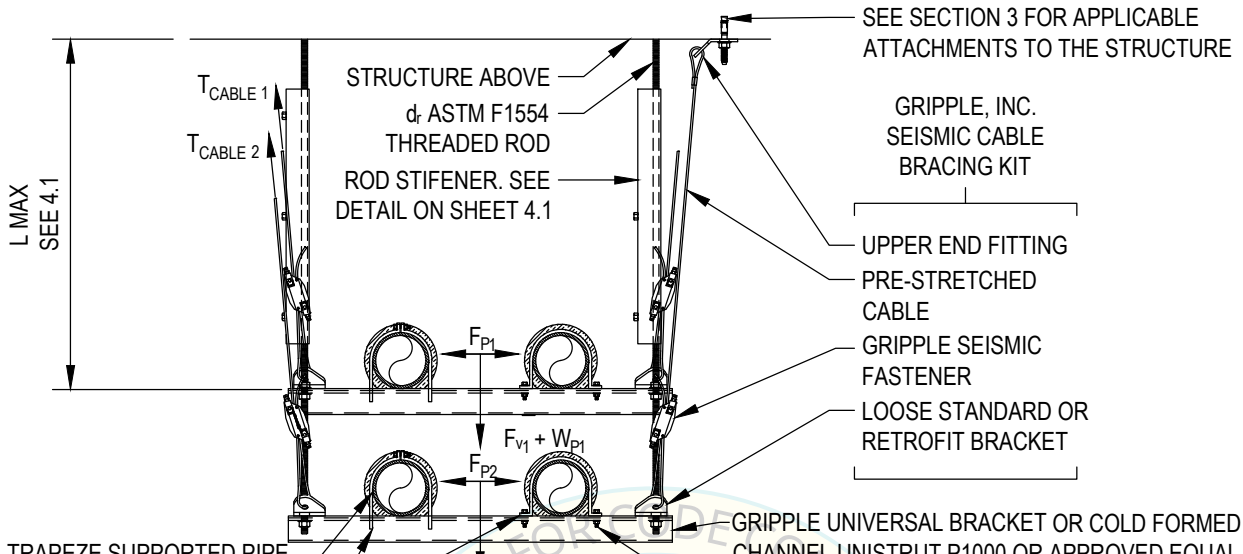

TYPICAL ELEVATION VIEW

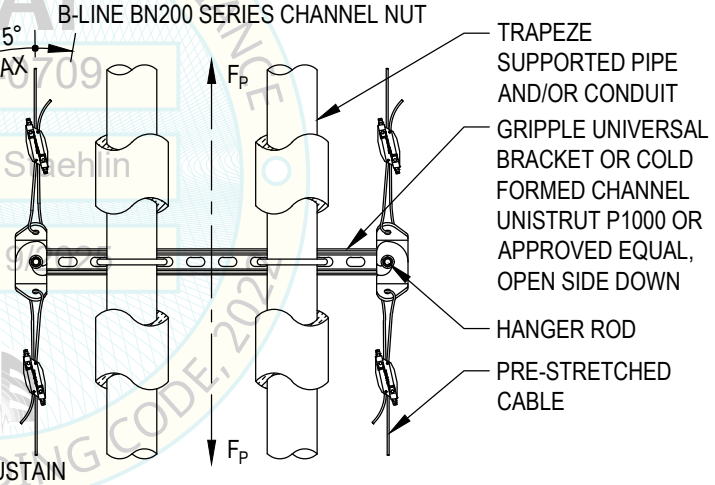

TYPICAL PLAN VIEW

CABLE KIT CAPACITIES (LRFD)			
KIT NUMBER	MAX CABLE TENSION, T_{CABLE}	TAG COLOR	CABLE DIAMETER
GS10	400 LBS	RED	5/64"
GS12	945 LBS	GREEN	1/8"
GS19	2265 LBS	YELLOW	3/16"
GS25	3570 LBS	PURPLE	1/4"

NOTES:

1. HAND-TIGHTEN CABLES TO REMOVE SLACK. CABLE MUST NOT SUSTAIN ANY DEAD LOAD.
2. SEE PAGE 4.1 FOR ROD STIFFENER DETAIL & REQUIREMENTS.
3. LOOSE STANDARD OR RETROFIT BRACKET SHOULD ALWAYS BE INSTALLED AT THE EQUIPMENT LEVEL. SEE PAGES 4.4 & 4.5 FOR BRACKETS.
4. BUILDING STRUCTURE AT ANCHOR LOCATIONS MUST BE POINT LOAD CAPABLE. VERIFY LOADING W/ S.E.O.R. FOR THE PROJECT.
5. LEAVE 2" TAIL EXTENDING OUT OF GRIPPLE SEISMIC FASTENER FOR FUTURE ADJUSTMENTS.
6. SEE SECTION 5 FOR DESIGN TABLES INCLUDING VALUES OF d_r AND θ.
7. T_{CABLE1} SHALL BE DESIGNED FOR THE TOTAL WEIGHT OF THE UPPER TIER (F_{p1}) AND T_{CABLE2} SHALL BE DESIGNED FOR THE TOTAL WEIGHT OF THE LOWER TIER (F_{p2}).
8. VERTICAL HANGER RODS SHALL BE CONTINUOUS.

BRACING KIT		PART NO.
QUANTITY	COMPONENT	
8	UPPER END FITTING	GSE, GSS
8	PRE-STRETCHED CABLE	-
8	GRIPPLE SEISMIC FASTENER	GS10, GS12 GS19, GS25
8	LOWER BRACKET	GSR, GSS

REVIEWED FOR CODE COMPLIANCE
HCAI
OPM-0709
BY: William Staehlin
DATE: 07/19/2025
CALIFORNIA BUILDING CODE, 2022

GRIPPLE®
Gripple Inc
1611 Emily Lane
Aurora, IL 60502
T: +1 866 474 7753
E: grippleinc@gripple.com

Mahmoud Faghihi, PE, SE
California SE No. S5789

PAGE NUMBER: 2.21

DATE 7/11/2025

CABLE BRACING SYSTEM - SINGLE HUNG CONDUIT - TRANSVERSE

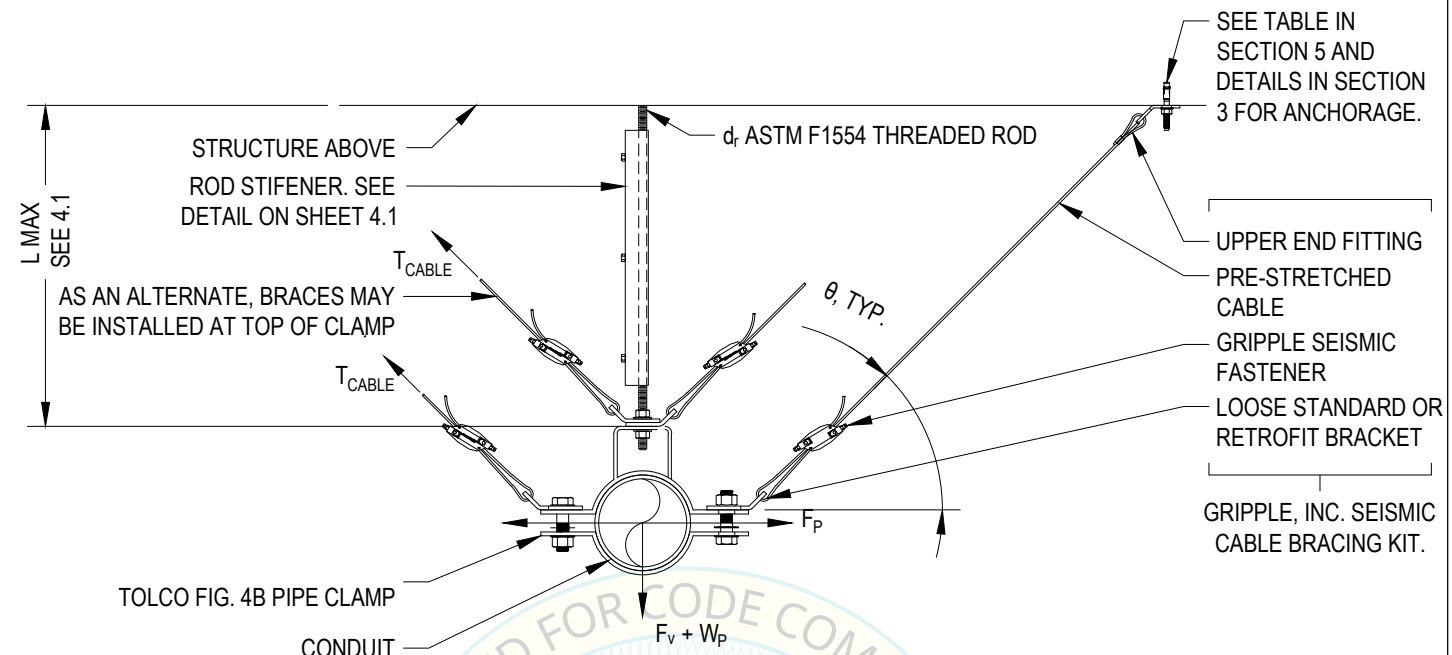

TYPICAL ELEVATION VIEW

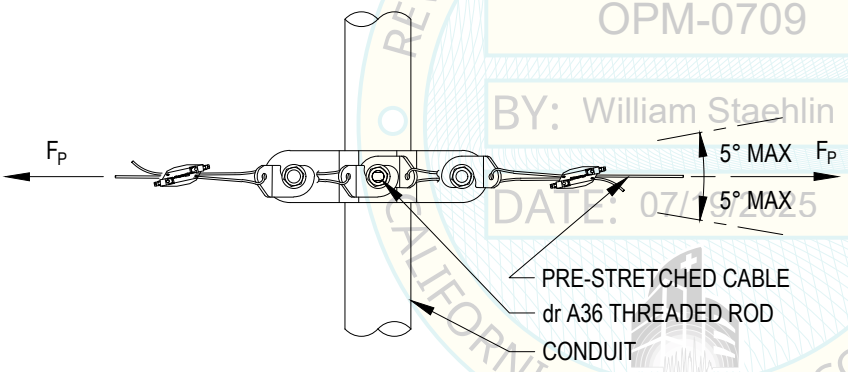

TYPICAL PLAN VIEW

REVIEWED FOR CODE COMPLIANCE
ICC
OPM-0709
BY: William Staehlin
DATE: 07/19/2025
CALIFORNIA BUILDING CODE 2022

CABLE KIT CAPACITIES (LRFD)			
KIT NUMBER	MAX CABLE TENSION, T_{CABLE}	TAG COLOR	CABLE DIAMETER
GS10	400 LBS	RED	5/64"
GS12	945 LBS	GREEN	1/8"
GS19	2265 LBS	YELLOW	3/16"
GS25	3570 LBS	PURPLE	1/4"

NOTES:

1. HAND-TIGHTEN CABLES TO REMOVE SLACK. CABLE MUST NOT SUSTAIN ANY DEAD LOAD.
2. SEE PAGE 4.1 FOR ROD STIFFENER DETAIL & REQUIREMENTS.
3. LOOSE STANDARD OR RETROFIT BRACKET SHOULD ALWAYS BE INSTALLED AT THE EQUIPMENT LEVEL. SEE PAGES 4.4 & 4.5 FOR BRACKETS.
4. BUILDING STRUCTURE AT ANCHOR LOCATIONS MUST BE POINT LOAD CAPABLE. VERIFY LOADING W/ S.E.O.R. FOR THE PROJECT.
5. LEAVE 2" TAIL EXTENDING OUT OF GRIPPLE SEISMIC FASTENER FOR FUTURE ADJUSTMENTS.
6. SEE SECTION 5 FOR DESIGN TABLES INCLUDING VALUES OF d_r, AND θ.

BRACING KIT		PART NO.
QUANTITY	COMPONENT	
2	UPPER END FITTING	GSE, GSS
2	PRE-STRETCHED CABLE	-
2	GRIPPLE SEISMIC FASTENER	GS10, GS12 GS19, GS25
2	LOWER BRACKET	GSR, GSS

GRIPPLE®
Gripple Inc
1611 Emily Lane
Aurora, IL 60502
T: +1 866 474 7753
E: grippleinc@gripple.com

MRAGHHY

Mahmoud Faghihi, PE, SE
California SE No. S5789

PAGE NUMBER: 2.22

DATE 7/11/2025

CABLE BRACING SYSTEM - SINGLE HUNG CONDUIT - LONGITUDINAL

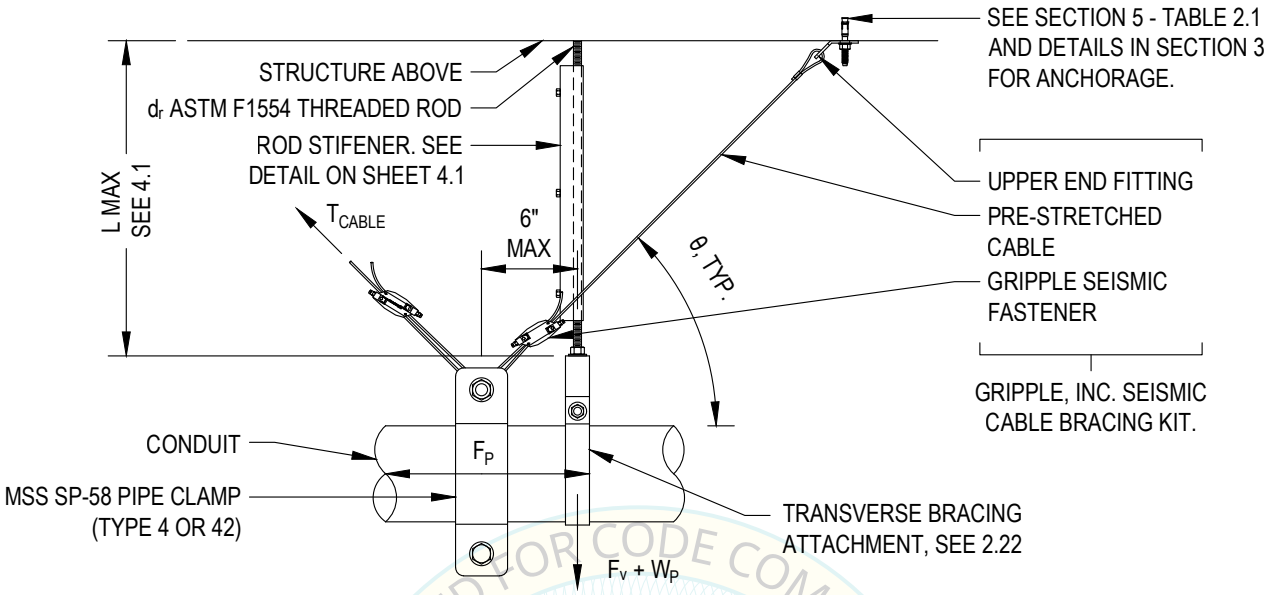

TYPICAL ELEVATION VIEW

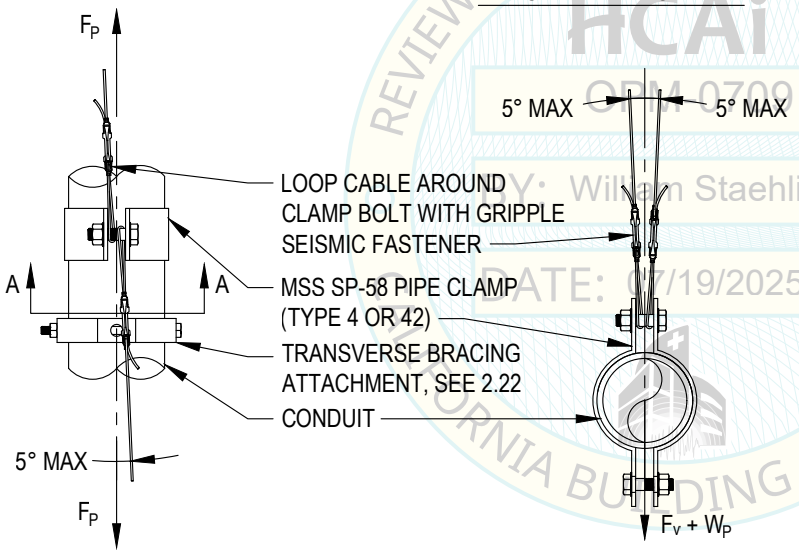

TYPICAL PLAN VIEW

SECTION A-A

CABLE KIT CAPACITIES (LRFD)			
KIT NUMBER	MAX CABLE TENSION, T_{CABLE}	TAG COLOR	CABLE DIAMETER
GS10	400 LBS	RED	5/64"
GS12	945 LBS	GREEN	1/8"
GS19	2265 LBS	YELLOW	3/16"
GS25	3570 LBS	PURPLE	1/4"

BRACING KIT		PART NO.
QUANTITY	COMPONENT	
2	UPPER END FITTING	GSE, GSS
2	PRE-STRETCHED CABLE	-
2	GRIPPLE SEISMIC FASTENER	GS10, GS12 GS19, GS25
2	LOWER BRACKET	GSR, GSS

NOTES:

1. HAND-TIGHTEN CABLES TO REMOVE SLACK. CABLE MUST NOT SUSTAIN ANY DEAD LOAD.
2. SEE PAGE 4.1 FOR ROD STIFFENER DETAIL & REQUIREMENTS.
3. LOOSE STANDARD OR RETROFIT BRACKET SHOULD ALWAYS BE INSTALLED AT THE EQUIPMENT LEVEL. SEE PAGES 4.4 & S4.5 FOR BRACKETS.
4. BUILDING STRUCTURE AT ANCHOR LOCATIONS MUST BE POINT LOAD CAPABLE. VERIFY LOADING W/ S.E.O.R. FOR THE PROJECT.
5. LEAVE 2" TAIL EXTENDING OUT OF GRIPPLE SEISMIC FASTENER FOR FUTURE ADJUSTMENTS.
6. SEE SECTION 5 FOR DESIGN TABLES INCLUDING VALUES OF d_r, d_p AND θ.

HCAi
OPM-0709
BY: William Staehlin
DATE: 07/19/2025
REVIEWED FOR CODE COMPLIANCE
CALIFORNIA BUILDING CODE 2022

GRIPPLE®
Gripple Inc
1611 Emily Lane
Aurora, IL 60502
T: +1 866 474 7753
E: grippleinc@gripple.com

Mahmoud Faghihi, PE, SE
California SE No. S5789

PAGE NUMBER: 2.23

DATE 7/11/2025

ALTERNATIVE BRACING FOR SINGLE HUNG PIPE OR CONDUIT

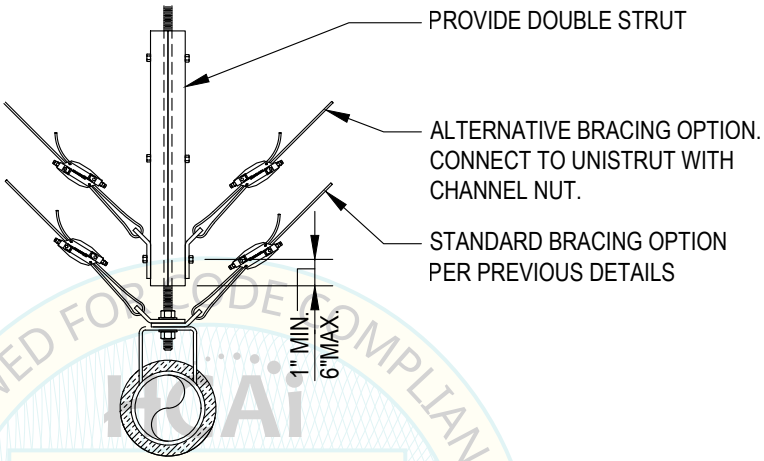

REVIEWED FOR CODE COMPLIANCE
OPM-0709
BY: William Staehlin
DATE: 07/19/2025
CALIFORNIA BUILDING CODE, 2022

NOTES:

1. BRACING ALTERNATIVE IS APPLICABLE TO DETAILS ON SHEETS 2.1A-D, 2.3 AND 2.22. REFER TO THOSE SHEETS FOR INFORMATION NOT SHOWN.

GRIPPLE®
Gripple Inc
1611 Emily Lane
Aurora, IL 60502
T: +1 866 474 7753
E: grippleinc@gripple.com

Mahmoud Faghihi, PE, SE
California SE No. S5789

PAGE NUMBER: 2.24

DATE 7/11/2025

ALTERNATIVE BRACING OPTIONS FOR DUCTS

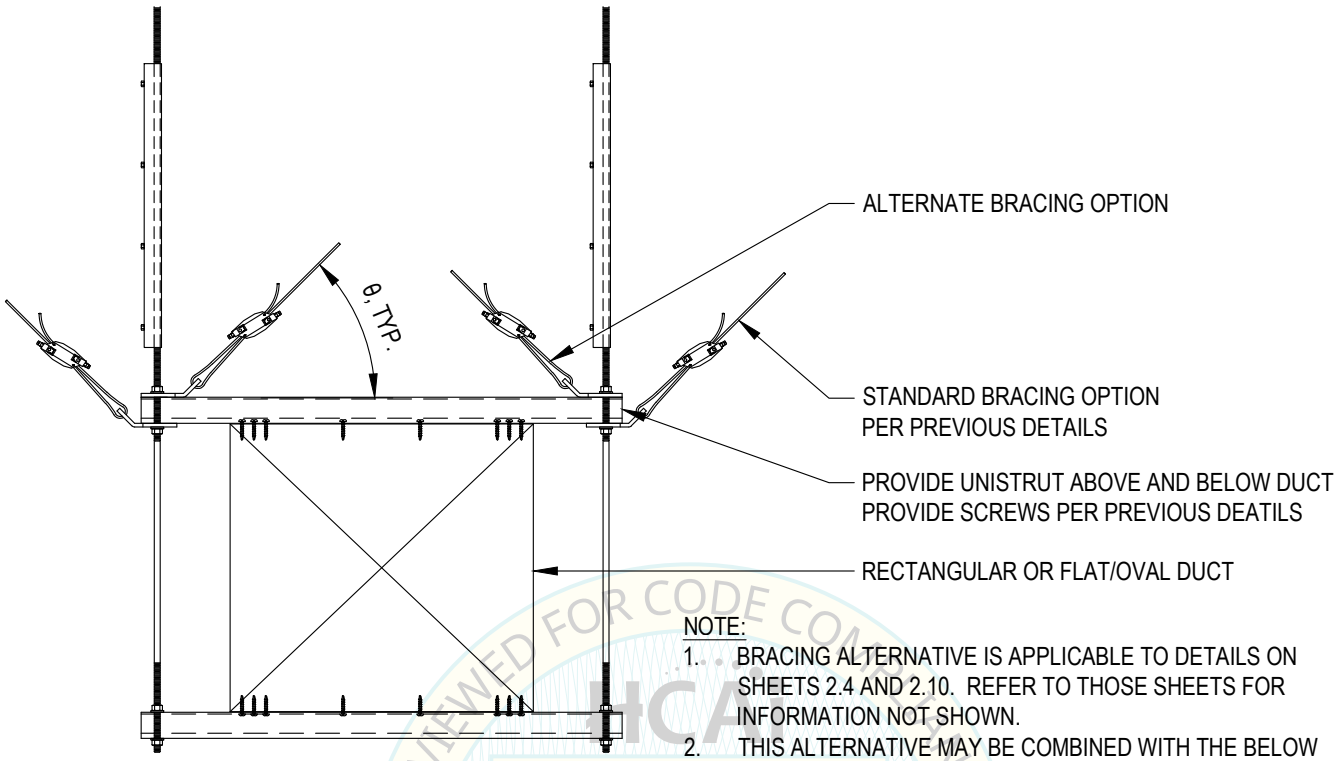

NOTE:

1. BRACING ALTERNATIVE IS APPLICABLE TO DETAILS ON SHEETS 2.4 AND 2.10. REFER TO THOSE SHEETS FOR INFORMATION NOT SHOWN.
2. THIS ALTERNATIVE MAY BE COMBINED WITH THE BELOW ALTERNATIVE. THAT IS, BRACING IN THE INWARD DIRECTION AND ATTACHED TO THE VERTICAL STRUTS.

INWARD BRACING ALTERNATIVE

REVIEWED FOR CODE COMPLIANCE
HCAI
OPM-0709
BY: William Staehlin
DATE: 07/19/2025
CALIFORNIA BUILDING CODE, 2022

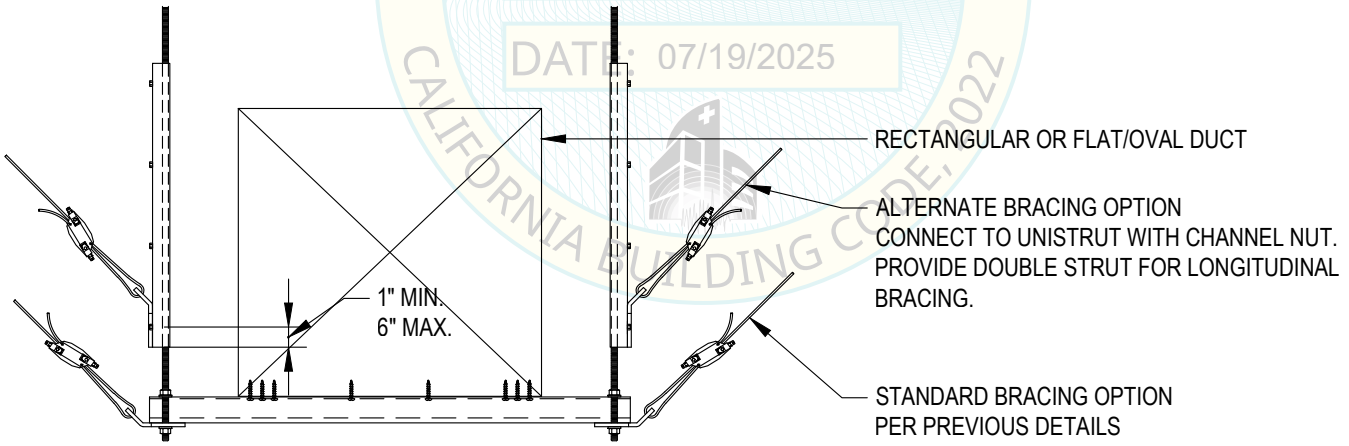

ALTERNATIVE BRACE TO VERTICAL STRUT

NOTE:

1. BRACING ALTERNATIVE IS APPLICABLE TO DETAILS ON SHEETS 2.4, 2.7 AND 2.10. REFER TO THOSE SHEETS FOR INFORMATION NOT SHOWN.
2. THIS BRACING ALTERNATIVE MAY BE USED SIMILARLY FOR THE LONGITUDINAL BRACING. FOR LONGITUDINAL BRACING THE ALTERNATIVE IS APPLICABLE TO DETAILS ON SHEETS 2.5, 2.6 AND 2.11. REFER TO THOSE SHEETS FOR INFORMATION NOT SHOWN.
3. VERTICAL HANGER RODS SHALL BE CONTINUOUS.

GRIPPLE®

Gripple Inc
1611 Emily Lane
Aurora, IL 60502

T: +1 866 474 7753
E: grippleinc@gripple.com

Mahmoud Faghihi, PE, SE
California SE No. S5789

PAGE NUMBER: 2.25

DATE 7/11/2025

ALTERNATIVE BRACING OPTIONS FOR TRAPEZE SUPPORTED PIPES, CABLE TRAYS OR CONDUIT

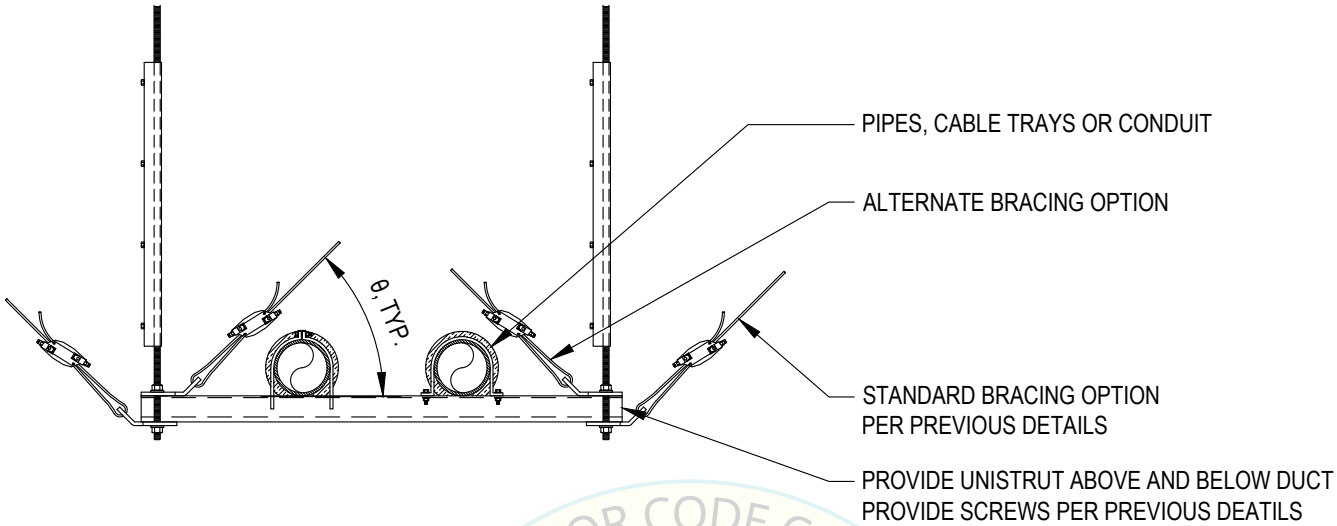

NOTE:

1. BRACING ALTERNATIVE IS APPLICABLE TO DETAILS ON SHEETS 2.13, 2.17 AND 2.20. REFER TO THOSE SHEETS FOR INFORMATION NOT SHOWN.
2. THIS ALTERNATIVE MAY BE COMBINED WITH THE BELOW ALTERNATIVE. THAT IS, BRACING IN THE INWARD DIRECTION AND ATTACHED TO THE VERTICAL STRUTS.

REVIEWED FOR CODE COMPLIANCE
HCAI
OPM-0709
BY: William Staehlin
DATE: 07/19/2025
CALIFORNIA BUILDING CODE 2022

INWARD BRACING ALTERNATIVE

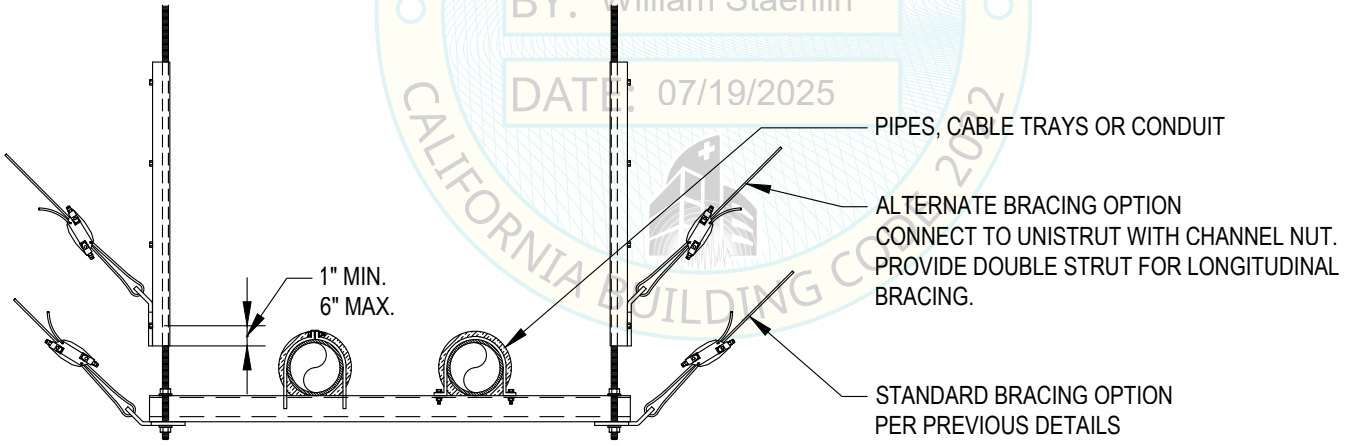

NOTE:

1. BRACING ALTERNATIVE IS APPLICABLE TO DETAILS ON SHEETS 2.13, 2.17 AND 2.20. REFER TO THOSE SHEETS FOR INFORMATION NOT SHOWN.
2. THIS BRACING ALTERNATIVE MAY BE USED SIMILARLY FOR THE LONGITUDINAL BRACING. FOR LONGITUDINAL BRACING THE ALTERNATIVE IS APPLICABLE TO DETAILS ON SHEETS 2.14, 2.18 AND 2.21. REFER TO THOSE SHEETS FOR INFORMATION NOT SHOWN.

ALTERNATIVE BRACE TO VERTICAL STRUT

GRIPPLE®
Gripple Inc
1611 Emily Lane
Aurora, IL 60502
T: +1 866 474 7753
E: grippleinc@gripple.com

Mahmoud Faghihi, PE, SE
California SE No. S5789

PAGE NUMBER: 2.26

DATE 7/11/2025

ALTERNATIVE BRACING CABLE TRAY TYPES

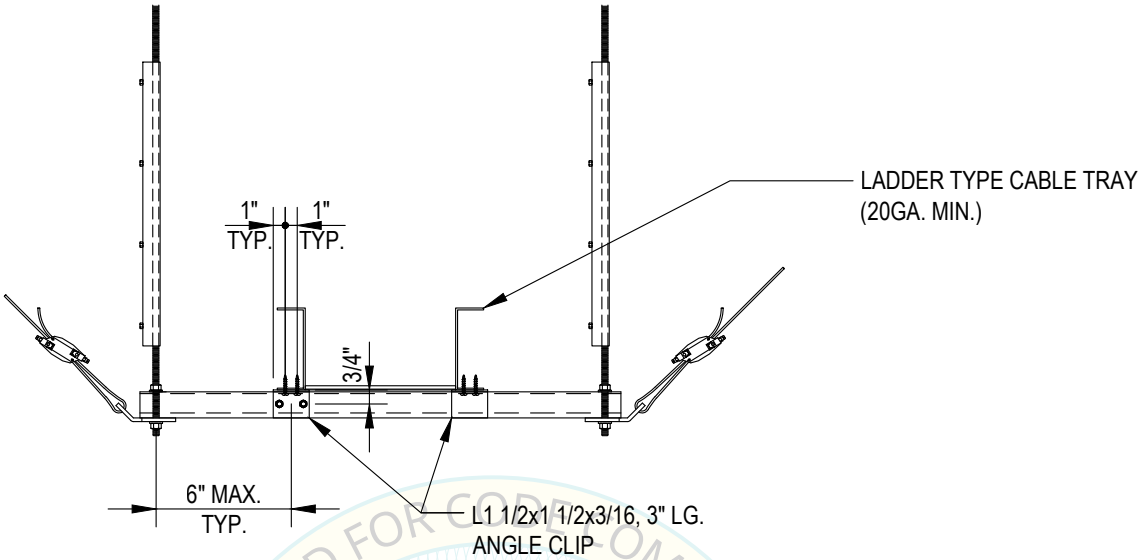

LADDER TYPE CABLE TRAY

REVIEWED FOR CODE COMPLIANCE
HCAi
OPM-0709
BY: William Staehlin
DATE: 07/19/2025
CALIFORNIA BUILDING CODE, 2022

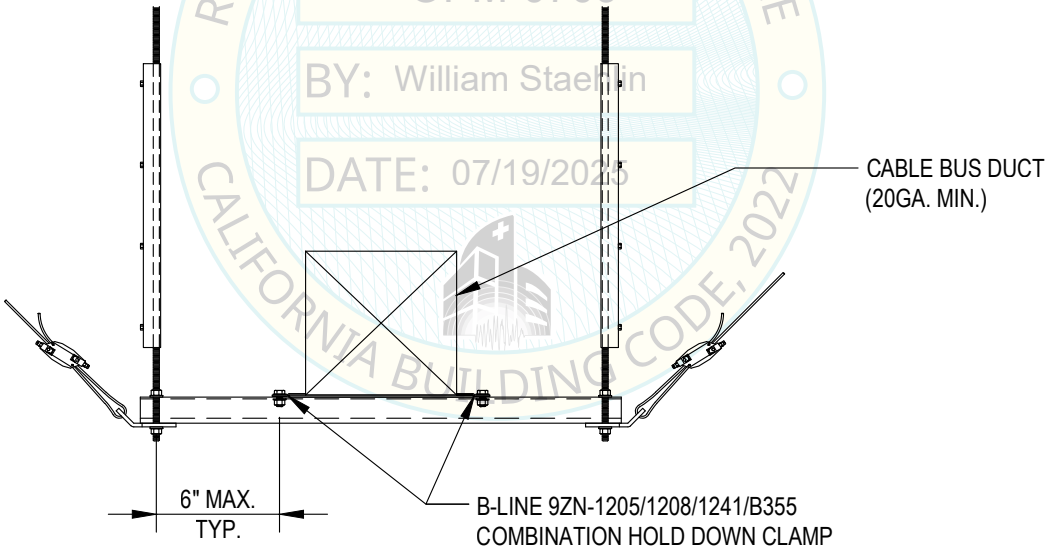

CABLE BUS DUCT

NOTE:

1. ALTERNATE CABLE TRAY TYPES ARE APPLICABLE TO DETAILS ON SHEETS 2.13 - 2.15. REFER TO THOSE SHEETS FOR INFORMATION NOT SHOWN.

GRIPPLE®
Gripple Inc
1611 Emily Lane
Aurora, IL 60502
T: +1 866 474 7753
E: grippleinc@gripple.com

Mahmoud Faghihi, PE, SE
California SE No. S5789

PAGE NUMBER: 2.27

DATE 7/11/2025

Section 3 - Structural Attachments

REVIEWED FOR CODE COMPLIANCE
HCAi
OPM-0709
BY: William Staehlin
DATE: 07/19/2025
CALIFORNIA BUILDING CODE, 2022

BRACE ATTACHMENT TO CONCRETE SLAB, WALL, OR BEAM USING HILTI KB-TZ2 EXPANSION ANCHORS

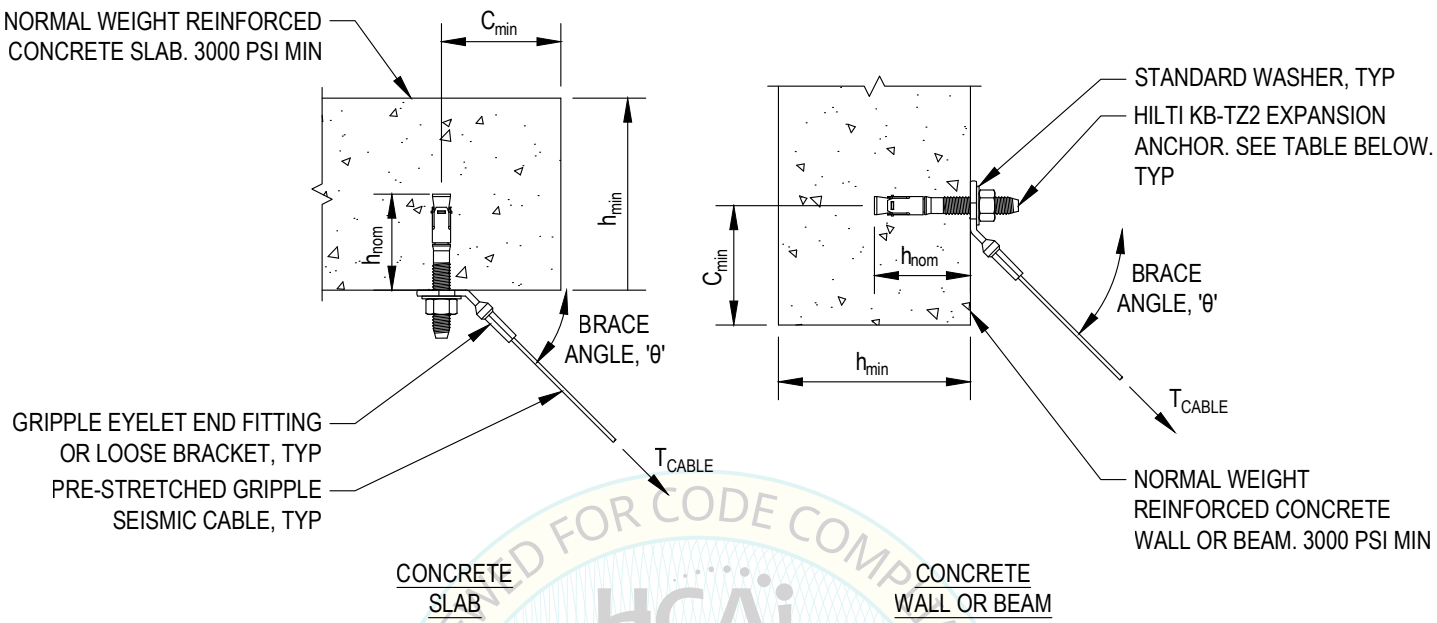

REVIEWED FOR CODE COMPLIANCE BY HCAi OPM 0709 William Staehlin DATE: 07/19/2025 CALIFORNIA BUILDING CODE 2022

Table 3.1.1 – Hilti KB-TZ2 into 3,000 psi NW Reinf Concrete

Brace Attachment Designation	"ø" Anchor diameter	"h_{nom}" Nominal Embed	"h_{ef}" Effective Embed	"C_{min}" min edge distance	"h_{min}" min conc thickness	"t_{cable}" Max Tension in Cable	"Ω_o x t_{cable}" Max Anchorage Force
B1	3/8"	2 1/2"	2"	2 1/2"	4"	100 lbs	200 lbs
B2	3/8"	2 1/2"	2"	2 1/2"	4"	300 lbs	600 lbs
B3	1/2"	2 1/2"	2"	5"	5"	600 lbs	1200 lbs
B4	1/2"	3 3/4"	3 1/4"	5"	5 1/2"	900 lbs	1800 lbs
B5	5/8"	3 3/4"	3 1/4"	6"	6"	1200 lbs	2400 lbs
B6	5/8"	4 1/2"	4"	8"	6"	1500 lbs	3000 lbs
B7	3/4"	5 1/2"	4 3/4"	10"	8"	2000 lbs	4000 lbs

NOTES:
1. OVER STRENGTH FACTOR = 2.0 PER ASCE 7-16 TABLE 13.6-1 HAS BEEN INCORPORATED INTO THE CAPACITIES PROVIDED IN THIS DETAIL.
2. INSTALL EXPANSION ANCHORS PER NOTES ON PAGE 1.21.
3. POINT LOADING AT ANCHOR LOCATIONS ON THE BUILDING STRUCTURE TO BE VERIFIED BY OTHERS.
4. LOCATE AND AVOID REINFORCING STEEL PRIOR TO INSTALLING ANCHORS. AVOID DAMAGING REINFORCING STEEL.
5. REFERENCE DETAILS IN SECTION 2 FOR ADDITIONAL BRACING INFORMATION.
6. FOLLOW BUILDING CODE AND MANUFACTURER REQUIREMENTS FOR INSTALLATION OF ANCHOR BOLTS, SEOR TO CONFIRM.

GRIPPLE®
Gripple Inc
1611 Emily Lane
Aurora, IL 60502
T: +1 866 474 7753
E: grippleinc@gripple.com

Mahmoud Faghihi, PE, SE
California SE No. S5789

PAGE NUMBER: 3.1.1

DATE 7/11/2025

BRACE ATTACHMENT TO CONCRETE SLAB, WALL, OR BEAM USING DEWALT POWER-STUD SD2 EXPANSION ANCHORS

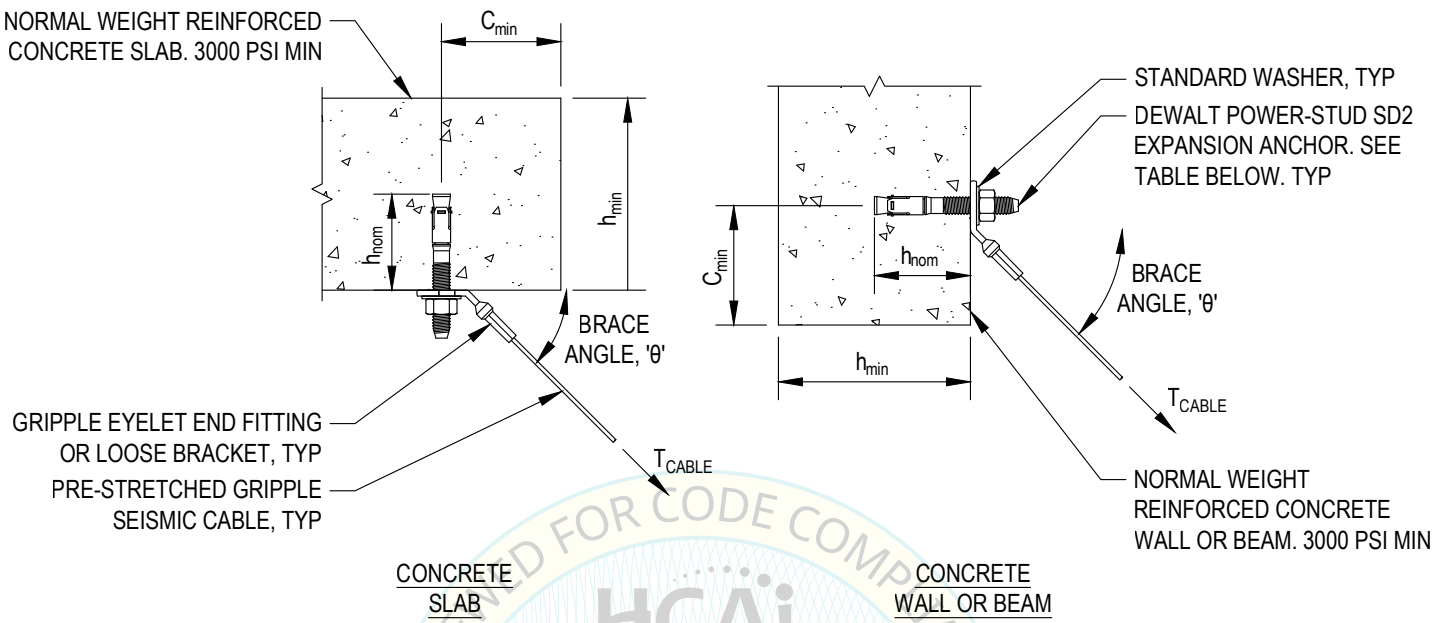

REVIEWED FOR CODE COMPLIANCE
HCAi
OPM-0709
BY: William Staehlin
DATE: 07/19/2025
CALIFORNIA BUILDING CODE 2022

Table 3.1.2 – Dewalt Power-Stud SD2 into 3,000 psi NW Reinf Concrete

Brace Attachment Designation	"ø" Anchor diameter	"h_{nom}" Nominal Embed	"h_{ef}" Effective Embed	"C_{min}" min edge distance	"h_{min}" min conc thickness	"t_{cable}" Max Tension in Cable	"Ω_o x t_{cable}" Max Anchorage Force
B1	3/8"	2 3/8"	2"	2 1/2"	4"	100 lbs	200 lbs
B2	3/8"	2 3/8"	2"	2 1/2"	4"	300 lbs	600 lbs
B3	3/8"	2 3/8"	2"	4"	4"	600 lbs	1200 lbs
B4	1/2"	3 3/4"	3 1/4"	4 1/2"	5 3/4"	900 lbs	1800 lbs
B5	5/8"	3 3/4"	3 1/4"	5"	5 3/4"	1200 lbs	2400 lbs
B6	5/8"	3 3/4"	3 1/4"	6"	5 3/4"	1500 lbs	3000 lbs
B7	3/4"	5 3/4"	5"	6"	10"	2000 lbs	4000 lbs

NOTES:

1. OVER STRENGTH FACTOR = 2.0 PER ASCE 7-16 TABLE 13.6-1 HAS BEEN INCORPORATED INTO THE CAPACITIES PROVIDED IN THIS DETAIL.
2. INSTALL EXPANSION ANCHORS PER NOTES ON PAGE 1.21.
3. POINT LOADING AT ANCHOR LOCATIONS ON THE BUILDING STRUCTURE TO BE VERIFIED BY OTHERS.
4. LOCATE AND AVOID REINFORCING STEEL PRIOR TO INSTALLING ANCHORS. AVOID DAMAGING REINFORCING STEEL.
5. REFERENCE DETAILS IN SECTION 2 FOR ADDITIONAL BRACING INFORMATION.
6. FOLLOW BUILDING CODE AND MANUFACTURER REQUIREMENTS FOR INSTALLATION OF ANCHOR BOLTS, SEOR TO CONFIRM.

GRIPPLE®
Gripple Inc
1611 Emily Lane
Aurora, IL 60502
T: +1 866 474 7753
E: grippleinc@gripple.com

Mahmoud Faghihi, PE, SE
California SE No. S5789

PAGE NUMBER: 3.1.2

DATE 7/11/2025

BRACE ATTACHMENT TO CONCRETE SLAB, WALL, OR BEAM USING SIMPSON STRONGBOLT EXPANSION ANCHORS

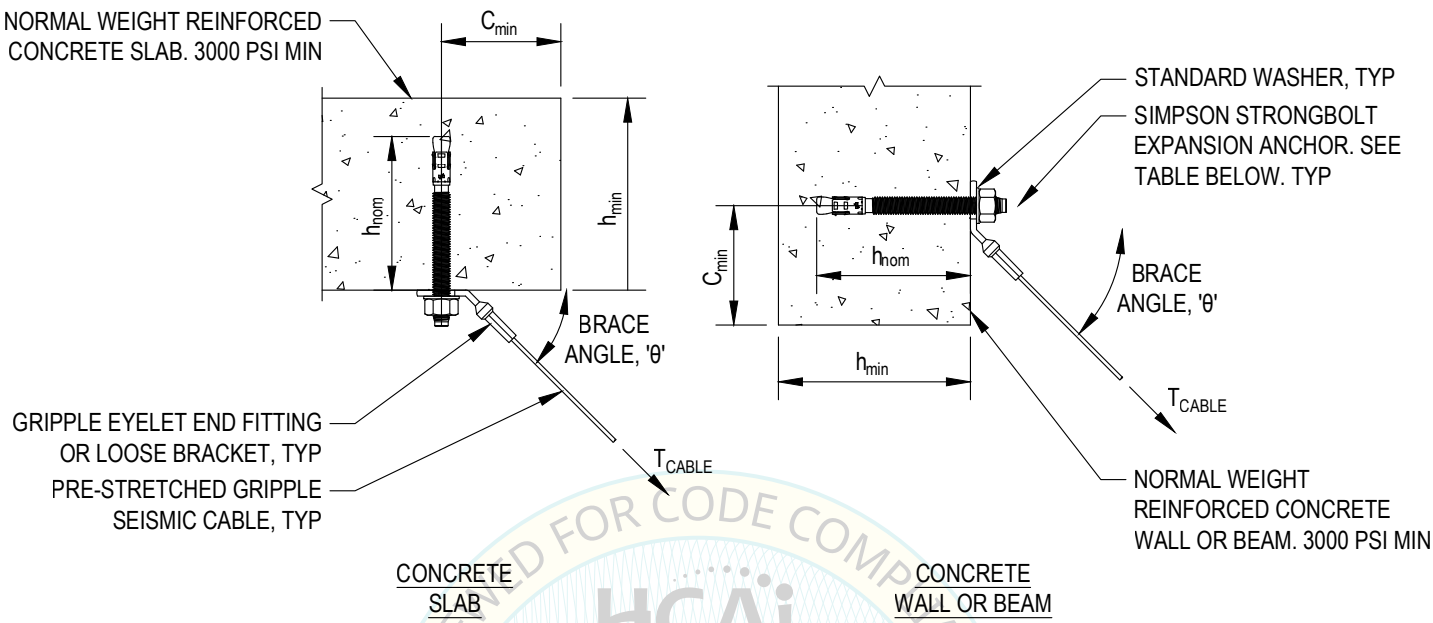

REVIEWED FOR CODE COMPLIANCE
HCAi
OPM-0709
BY: William Staehlin
DATE: 07/19/2025
CALIFORNIA BUILDING CODE, 2022

Table 3.1.3 – Simpson Strongbolt into 3,000 psi NW Reinf Concrete

Brace Attachment Designation	"ø" Anchor diameter	"h_{nom}" Nominal Embed	"h_{ef}" Effective Embed	"C_{min}" min edge distance	"h_{min}" min conc thickness	"t_{cable}" Max Tension in Cable	"Ω_o x t_{cable}" Max Anchorage Force
B1	3/8"	2"	1 5/8"	6"	4"	100 lbs	200 lbs
B2	3/8"	2"	1 5/8"	6"	4"	300 lbs	600 lbs
B3	3/8"	2 3/4"	2 3/8"	6"	5"	600 lbs	1200 lbs
B4	1/2"	2 3/4"	2 1/4"	6"	4"	900 lbs	1800 lbs
B5	5/8"	3 3/8"	2 3/4"	6 1/2"	5 1/2"	1200 lbs	2400 lbs
B6	5/8"	3 3/8"	2 3/4"	6 1/2"	5 1/2"	1500 lbs	3000 lbs
B7	3/4"	5"	4 1/2"	6 1/2"	7 1/2"	2000 lbs	4000 lbs

NOTES:

1. OVER STRENGTH FACTOR = 2.0 PER ASCE 7-16 TABLE 13.6-1 HAS BEEN INCORPORATED INTO THE CAPACITIES PROVIDED IN THIS DETAIL.
2. INSTALL EXPANSION ANCHORS PER NOTES ON PAGE 1.21.
3. POINT LOADING AT ANCHOR LOCATIONS ON THE BUILDING STRUCTURE TO BE VERIFIED BY OTHERS.
4. LOCATE AND AVOID REINFORCING STEEL PRIOR TO INSTALLING ANCHORS. AVOID DAMAGING REINFORCING STEEL.
5. REFERENCE DETAILS IN SECTION 2 FOR ADDITIONAL BRACING INFORMATION.
6. FOLLOW BUILDING CODE AND MANUFACTURER REQUIREMENTS FOR INSTALLATION OF ANCHOR BOLTS, SEOR TO CONFIRM.

GRIPPLE®
Gripple Inc
1611 Emily Lane
Aurora, IL 60502
T: +1 866 474 7753
E: grippleinc@gripple.com

Mahmoud Faghihi, PE, SE
California SE No. S5789

PAGE NUMBER: 3.1.3

DATE 7/11/2025

BRACE ATTACHMENT - UNDERSIDE OF CONCRETE SLAB WITH TWO EXPANSION ANCHORS

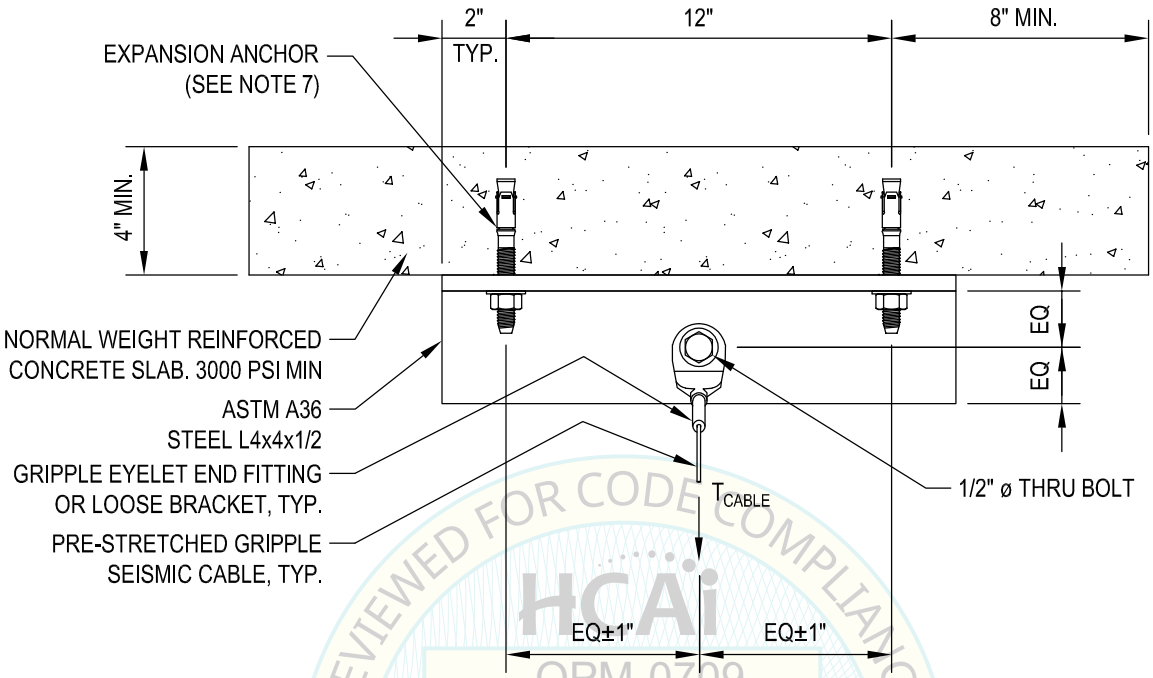

REVIEWED FOR CODE COMPLIANCE
HCAi
OPM-0709
BY: William Staehlin
DATE: 07/19/2025
CALIFORNIA BUILDING CODE, 2022

NOTES:

1. OVER STRENGTH FACTOR = 2.0 PER ASCE 7-16 TABLE 13.6-1 HAS BEEN INCORPORATED INTO THE CAPACITIES PROVIDED IN THIS DETAIL.
2. INSTALL EXPANSION ANCHORS PER NOTES ON PAGE 1.21.
3. STRUCTURAL ENGINEER ON RECORD SHALL VERIFY POINT LOADING AT ANCHOR LOCATIONS ON THE BUILDING STRUCTURE.
4. LOCATE AND AVOID REINFORCING STEEL PRIOR TO INSTALLING ANCHORS. AVOID DAMAGING REINFORCING STEEL.
5. REFERENCE DETAILS IN SECTION 2 FOR ADDITIONAL BRACING INFORMATION.
6. FOLLOW BUILDING CODE AND MANUFACTURER REQUIREMENTS FOR INSTALLATION OF ANCHOR BOLTS, SEOR TO CONFIRM.
7. SEE PAGES 3.1.1, 3.1.2, AND 3.1.3 FOR EXPANSION ANCHOR TABLES. CAPACITIES MAY BE DOUBLED WHEN TWO ANCHORS ARE USED.

GRIPPLE®
Gripple Inc
1611 Emily Lane
Aurora, IL 60502
T: +1 866 474 7753
E: grippleinc@gripple.com

Mahmoud Faghihi, PE, SE
California SE No. S5789

PAGE NUMBER: 3.1.4

DATE 7/11/2025

BRACE ATTACHMENT - UNDERSIDE OF CONCRETE FILL OVER METAL DECK (MAX 1 1/2" DEEP) - EXPANSION ANCHORS

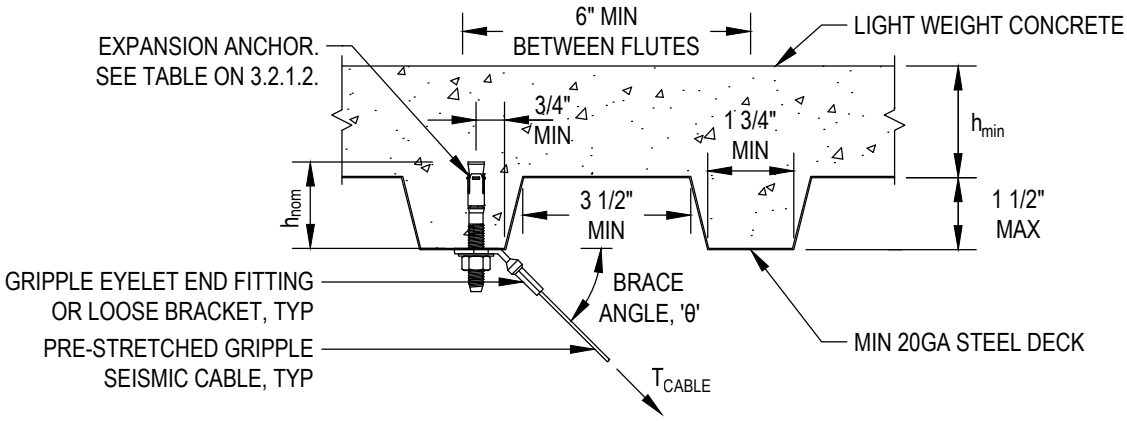

ATTACHMENT WITH ONE ANCHOR

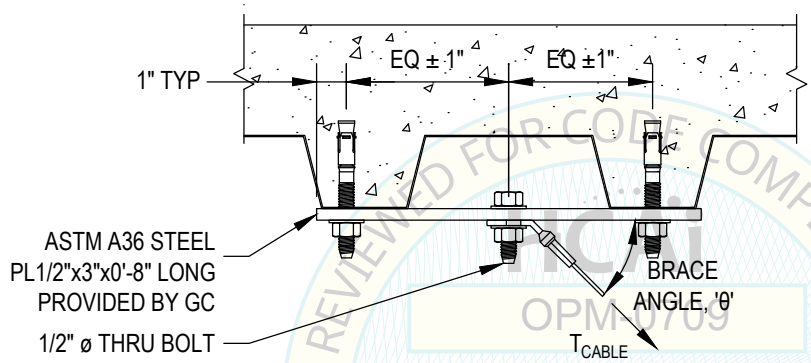

ATTACHMENT WITH TWO ANCHOR

NOTE: REFERENCE DETAIL ABOVE FOR INFORMATION NOT SHOWN.

REVIEWED FOR CODE COMPLIANCE
HCAI
OPM-0709
BY: William Staehlin
DATE: 07/19/2025
CALIFORNIA BUILDING CODE, 2022

NOTES:

1. OVER STRENGTH FACTOR = 2.0 PER ASCE 7-16 TABLE 13.6-1 HAS BEEN INCORPORATED INTO THE CAPACITIES PROVIDED IN THIS DETAIL.
2. INSTALL EXPANSION ANCHORS PER NOTES ON PAGE 1.21.
3. POINT LOADING AT ANCHOR LOCATIONS ON THE BUILDING STRUCTURE TO BE VERIFIED BY OTHERS.
4. LOCATE AND AVOID REINFORCING STEEL PRIOR TO INSTALLING ANCHORS. AVOID DAMAGING REINFORCING STEEL.
5. REFERENCE DETAILS SEE 3.1.1 FOR ADDITIONAL BRACING INFORMATION.
6. FOLLOW BUILDING CODE AND MANUFACTURER REQUIREMENTS FOR INSTALLATION OF ANCHOR BOLTS, SEOR TO CONFIRM.
7. SEE PAGE 3.2.1.2 FOR ANCHOR TABLES.

GRIPPLE®

Gripple Inc
1611 Emily Lane
Aurora, IL 60502

T: +1 866 474 7753
E: grippleinc@gripple.com

Mahmoud Faghihi, PE, SE
California SE No. S5789

PAGE NUMBER: 3.2.1.1

DATE 7/11/2025

Table 3.2.1A – Hilti KB-TZ2 into 3,000 psi LW Concrete Fill over 1 1/2" Deep Metal Deck							
	Brace Attachment Designation	"ø" Anchor diameter	"h_{nom}" Nominal Embed	"h_{ef}" Effective Embed	"h_{min}" min conc thickness	"t_{cable}" Max Tension in Cable	"Ω_0 x t_{cable}" Max Anchorage Force
One Anchor	B1	3/8"	1 7/8"	1 1/2"	2 1/2"	100 lbs	200 lbs
	B2	3/8"	2 1/2"	2"	2 1/2"	300 lbs	600 lbs
	B3	5/8"	3 1/4"	2 3/4"	3 1/4"	600 lbs	1200 lbs
Two Anchors	B2	3/8"	1 7/8"	1 1/2"	2 1/2"	300 lbs	600 lbs
	B4	3/8"	2 1/2"	2"	2 1/2"	900 lbs	1800 lbs
	B5	5/8"	3 1/4"	2 3/4"	3 1/4"	1200 lbs	2400 lbs

Table 3.2.1B – Dewalt Power-Stud+SD2 into 3,000 psi LW Concrete Fill over 1 1/2" Deep Metal Deck							
	Brace Attachment Designation	"ø" Anchor diameter	"h_{nom}" Nominal Embed	"h_{ef}" Effective Embed	"h_{min}" min conc thickness	"t_{cable}" Max Tension in Cable	"Ω_0 x t_{cable}" Max Anchorage Force
One Anchor	B2	3/8"	2 3/8"	2"	2 1/4"	300 lbs	600 lbs
Two Anchors	B3	3/8"	2 3/8"	2"	2 1/4"	600 lbs	1200 lbs

REVIEWED FOR CODE COMPLIANCE
ICC
OPM-0709
BY: William Staehlin
DATE: 07/19/2025
CALIFORNIA BUILDING CODE, 2022

GRIPPLE®
Gripple Inc
1611 Emily Lane
Aurora, IL 60502
T: +1 866 474 7753
E: grippleinc@gripple.com

Mahmoud Faghihi, PE, SE
California SE No. S5789

PAGE NUMBER: 3.2.1.2

DATE 7/11/2025

BRACE ATTACHMENT - UNDERSIDE OF CONCRETE FILL OVER METAL DECK (MAX 3" DEEP) - EXPANSION ANCHORS

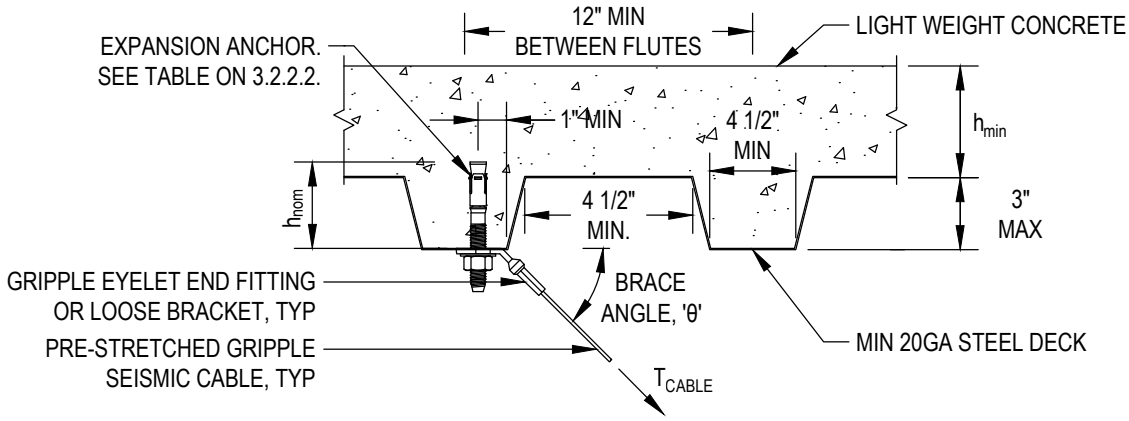

ATTACHMENT WITH ONE ANCHOR

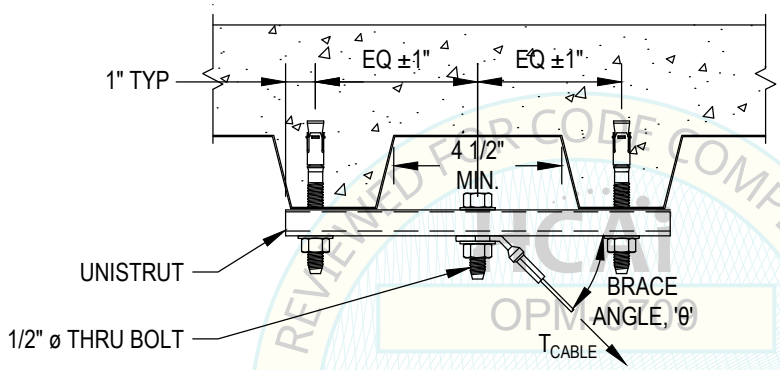

ATTACHMENT WITH TWO ANCHOR

NOTE: REFERENCE DETAIL ABOVE FOR INFORMATION NOT SHOWN.

REVIEWED FOR CODE COMPLIANCE
ICC
OPM 0709
BY: William Staehlin
DATE: 07/19/2025
CALIFORNIA BUILDING CODE, 2022

NOTES:

1. OVER STRENGTH FACTOR = 2.0 PER ASCE 7-16 TABLE 13.6-1 HAS BEEN INCORPORATED INTO THE CAPACITIES PROVIDED IN THIS DETAIL.
2. INSTALL EXPANSION ANCHORS PER NOTES ON PAGE 1.21.
3. STRUCTURAL ENGINEER OF RECORD SHALL VERIFY POINT LOADING AT ANCHOR LOCATIONS ON THE BUILDING STRUCTURE.
4. LOCATE AND AVOID REINFORCING STEEL PRIOR TO INSTALLING ANCHORS. AVOID DAMAGING REINFORCING STEEL.
5. REFERENCE DETAILS IN SECTION 2 FOR ADDITIONAL BRACING INFORMATION.
6. FOLLOW BUILDING CODE AND MANUFACTURER REQUIREMENTS FOR INSTALLATION OF ANCHOR BOLTS, SEOR TO CONFIRM.
7. SEE PAGE 3.2.2.2 FOR ANCHOR TABLES.

GRIPPLE®
Gripple Inc
1611 Emily Lane
Aurora, IL 60502
T: +1 866 474 7753
E: grippleinc@gripple.com

Mahmoud Faghihi, PE, SE
California SE No. S5789

PAGE NUMBER: 3.2.2.1

DATE 7/11/2025

Table 3.2.2A – Hilti KB-TZ2 into 3,000 psi LW Concrete Fill over 3" Deep Metal Deck							
	Brace Attachment Designation	"ø" Anchor diameter	"h_{nom}" Nominal Embed	"h_{ef}" Effective Embed	"h_{min}" min conc thickness	"t_{cable}" Max Tension in Cable	"Ω_0 x t_{cable}" Max Anchorage Force
One Anchor	B2	3/8"	1 7/8"	1 1/2"	2 1/2"	300 lbs	600 lbs
	B3	1/2"	3"	2 1/2"	2 1/2"	600 lbs	1200 lbs
	B4	5/8"	3 1/4"	2 3/4"	2 1/2"	900 lbs	1800 lbs
Two Anchors	B3	3/8"	1 7/8"	1 1/2"	2 1/2"	600 lbs	1200 lbs
	B5	1/2"	3"	2 1/2"	2 1/2"	1200 lbs	2400 lbs
	B7	5/8"	4 1/2"	4"	2 1/2"	1500 lbs	3000 lbs

Table 3.2.2B – Dewalt Power-Stud+SD2 into 3,000 psi LW Concrete Fill over 3" Deep Metal Deck							
	Brace Attachment Designation	"ø" Anchor diameter	"h_{nom}" Nominal Embed	"h_{ef}" Effective Embed	"h_{min}" min conc thickness	"t_{cable}" Max Tension in Cable	"Ω_0 x t_{cable}" Max Anchorage Force
One Anchor	B2	3/8"	2 3/8"	2"	3 1/4"	300 lbs	600 lbs
	B3	1/2"	3 3/4"	3 1/4"	3 1/4"	600 lbs	1200 lbs
	B5	5/8"	4 7/8"	4 1/4"	3 1/4"	1200 lbs	2400 lbs
Two Anchors	B3	3/8"	2 3/8"	2"	3 1/4"	600 lbs	1200 lbs
	B5	1/2"	3 3/4"	3 1/4"	3 1/4"	1200 lbs	2400 lbs
	B7	5/8"	4 7/8"	4 1/4"	3 1/4"	1500 lbs	3000 lbs

REVIEWED FOR CODE COMPLIANCE
BY:
DATE: 07/19/2025
CALIFORNIA BUILDING CODE 2022

Table 3.2.2C – Simpson Strongbolt 2 into 3,000 psi LW Concrete Fill over 3" Deep Metal Deck							
	Brace Attachment Designation	"ø" Anchor diameter	"h_{nom}" Nominal Embed	"h_{ef}" Effective Embed	"h_{min}" min conc thickness	"t_{cable}" Max Tension in Cable	"Ω_0 x t_{cable}" Max Anchorage Force
One Anchor	B2	3/8"	2 1/2"	2 1/8"	1 1/2"	300 lbs	600 lbs
	B3	1/2"	3 1/4"	2 3/4"	1 1/2"	600 lbs	1200 lbs
	B4	5/8"	4 3/8"	3 3/4"	1 1/2"	900 lbs	1800 lbs
Two Anchors	B3	3/8"	2 1/4"	1 7/8"	1 1/2"	600 lbs	1200 lbs
	B5	1/2"	3 1/4"	2 3/4"	1 1/2"	1200 lbs	2400 lbs
	B7	5/8"	4 7/8"	4 1/4"	1 1/2"	1500 lbs	3000 lbs

BRACE ATTACHMENT - UNDERSIDE OF BARE METAL DECK - TEK SCREWS

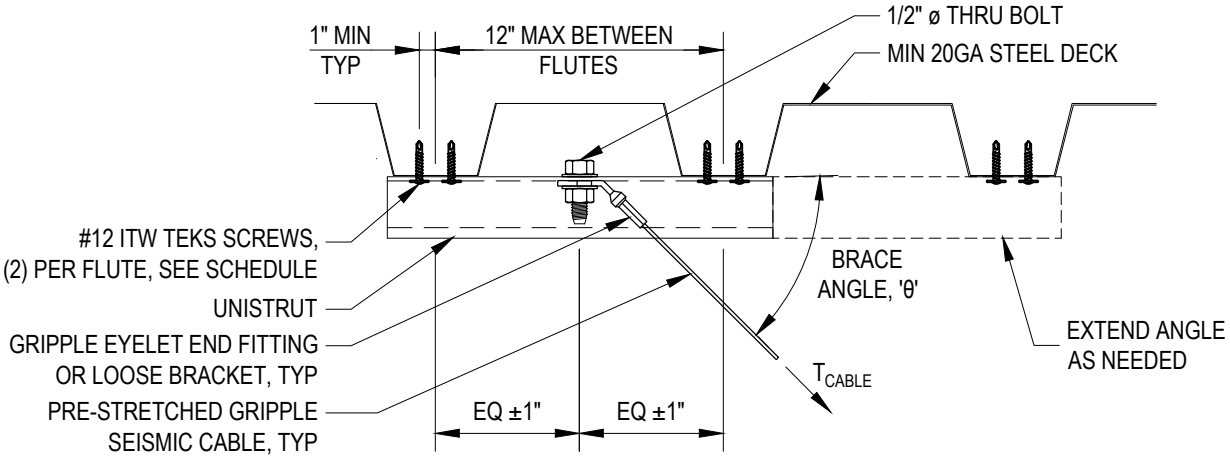

REVIEWED FOR CODE COMPLIANCE
HCAi
OPM-0709
BY: William Staehlin
DATE: 07/19/2025
CALIFORNIA BUILDING CODE

Table 3.3 – TEK Screws to Bare Metal Deck			
Number of #12 screws	Brace Attachment Designation at Brace Angle, 'X'		
	30	45	60
4	B2	B2	B2

NOTES:
1. POINT LOADING AT ANCHOR LOCATIONS ON THE BUILDING STRUCTURE TO BE VERIFIED BY OTHERS.
2. FOR ITW TEKS SCREWS, REFERENCE ICC - ESR 1976.
3. REFERENCE DETAILS IN SECTION 2 FOR ADDITIONAL BRACING INFORMATION.
4. MAXIMUN OUT OF PLANE ANGLE SHALL NOT EXCEEL 45 DEGREES

GRIPPLE®
Gripple Inc
1611 Emily Lane
Aurora, IL 60502
T: +1 866 474 7753
E: grippleinc@gripple.com

Mahmoud Faghihi, PE, SE
California SE No. S5789

PAGE NUMBER: 3.3

DATE 7/11/2025

BRACE ATTACHMENT - STEEL BEAM

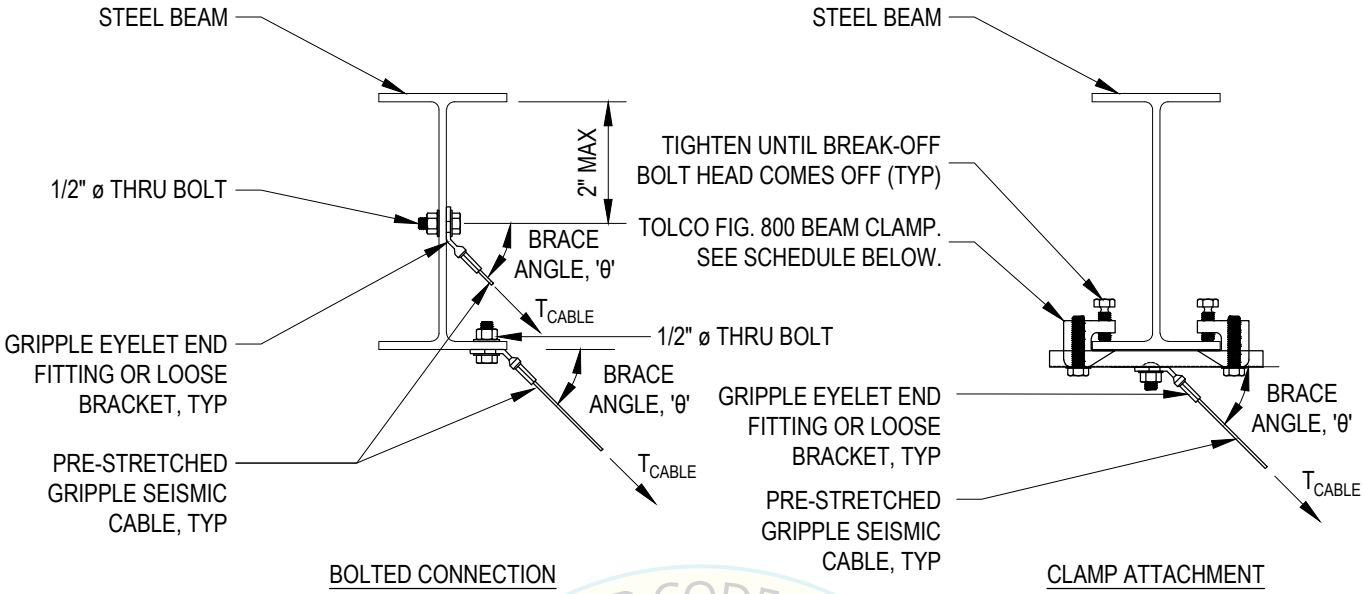

Table 3.4A – Thru bolts to Steel Beam					
"ø" Bolt diameter	Min install torque	"C_{edge}" min edge distance	Brace Attachment Designation at Brace Angle, 'θ'		
(in)		(in)	30	45	60
3/8	16	3/4	B6	B6	B7
1/2	40	1	B7	B7	B7

Table 3.4B – Tolco Fig. 800 clamp to Steel Beam			
Brace Orientation*	Brace Attachment Designation at Max Brace Angle, 'θ'		
	30	45	60
Perpendicular to beam	B7	B7	B6
Parallel to beam	B7	B6	B5
*If brace is at an angle relative to the beam, loads for parallel orientation govern.			

NOTES:

1. POINT LOADING AT ANCHOR LOCATIONS ON THE BUILDING STRUCTURE TO BE VERIFIED BY OTHERS AND PROVIDE ADEQUATE BEAM BRACING AS REQUIRED.
2. DO NOT DRILL HOLES IN STRUCTURAL STEEL BEAMS WITHOUT WRITTEN APPROVAL FROM THE STRUCTURAL ENGINEER OF RECORD.
3. ALL STEEL MEMBERS SHALL BE ASTM A36 MINIMUM.
4. REFERENCE DETAILS IN SECTION 2 FOR ADDITIONAL BRACING INFORMATION.
5. DO NOT CONNECT TO STEEL BEAMS WITHIN THE "PORTECTED ZONES" PER AISC. SEE STRUCTURAL DRAWINGS FOR PROTECTED ZONE LOCATIONS.

GRIPPLE®

Gripple Inc
1611 Emily Lane
Aurora, IL 60502

T: +1 866 474 7753
E: grippleinc@gripple.com

Mahmoud Faghihi, PE, SE
California SE No. S5789

PAGE NUMBER: 3.4

DATE 7/11/2025

BRACE ATTACHMENT - WOOD BEAM - THRU BOLT

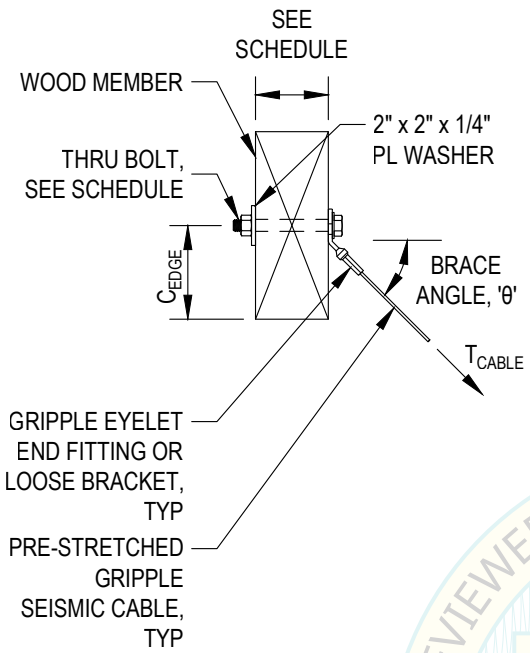

Table 3.5 – Thru-Bolt Perpendicular to Wood Member

Member Size	Brace Angle, 'θ'	Brace Attachment Designation	"ø" Anchor diameter	"C_{edge}" min edge distance	"C_{end}" min end distance
	(degrees)		(in)	(in)	(in)
2x (1 1/2")	30	B4	1/2	2	3 1/2
		B5	3/4	3	5 1/4
		B6	1	4	7
	45	B3	1/2	2	3 1/2
		B4	3/4	3	5 1/4
	60	B3	1/2	2	3 1/2
		B4	1	4	7
3x (2 1/2")	30	B6	1/2	2	3 1/2
		B7	3/4	3	5 1/4
	45	B4	1/2	2	3 1/2
		B5	5/8	2 1/2	4 3/8
		B6	1	4	7
	60	B4	1/2	2	3 1/2
		B5	1	4	7
4x (3 1/2")	30	B6	1/2	2	3 1/2
		B7	5/8	2 1/2	4 3/8
	45	B5	1/2	2	3 1/2
		B6	5/8	2 1/2	4 3/8
		B7	1	4	7
	60	B4	1/2	2	3 1/2
		B5	5/8	2 1/2	4 3/8
		B6	3/4	3	5 1/4

REVIEWED FOR CODE COMPLIANCE
HCAi
OPM-0709
BY: William Staehlin
DATE: 07/19/2025
CALIFORNIA BUILDING

NOTES:
1. POINT LOADING AT ANCHOR LOCATIONS ON THE BUILDING STRUCTURE TO BE VERIFIED BY OTHERS AND PROVIDE ADEQUATE BEAM BRACING AS REQUIRED.
2. DO NOT DRILL HOLES IN STRUCTURAL WOOD BEAMS WITHOUT WRITTEN APPROVAL FROM THE STRUCTURAL ENGINEER OF RECORD.
3. CAPACITIES IN THE SCHEDULE ARE BASED ON WOOD WITH A SPECIFIC GRAVITY OF 0.50 (DOUGLAS FIR - LARCH).
4. DRILL BOLT HOLES 1/16" LARGER THAN THE NOMINAL BOLT DIAMETER.
5. PROVIDE ASTM A307 MINIMUM THRU BOLTS.
6. REFERENCE DETAILS IN SECTION 2 FOR ADDITIONAL BRACING INFORMATION.

GRIPPLE®
Gripple Inc
1611 Emily Lane
Aurora, IL 60502
T: +1 866 474 7753
E: grippleinc@gripple.com

Mahmoud Faghihi, PE, SE
California SE No. S5789

PAGE NUMBER: 3.5

DATE 7/11/2025

BRACE ATTACHMENT - WOOD BEAM - LAG SCREW

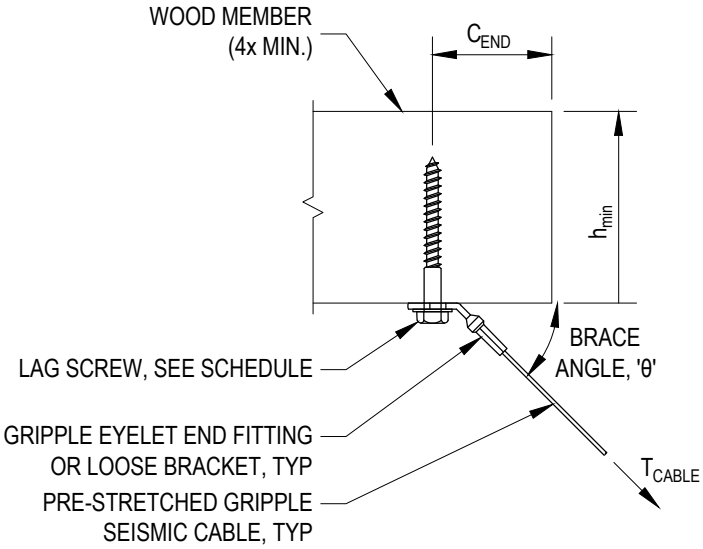

ATTACHMENT WITH
ONE LAG SCREW

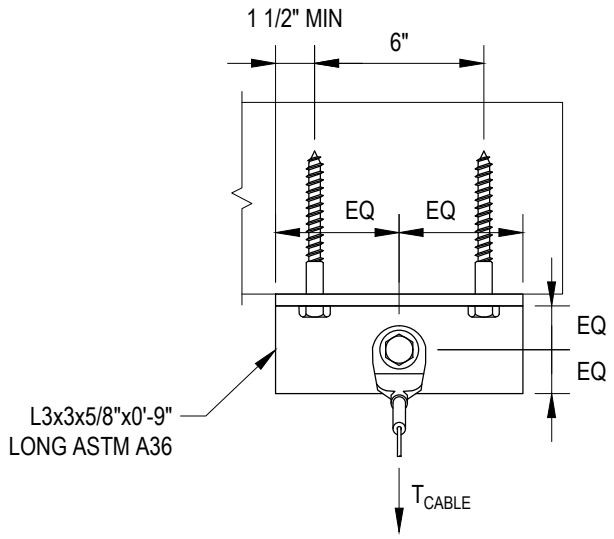

ATTACHMENT WITH
TWO LAG SCREWS

NOTE: REFERENCE ONE LAG DETAIL
FOR INFORMATION NOT SHOWN.

REVIEWED FOR CODE COMPLIANCE
HCAi

Table 3.6 – Lag Screws to Wood Member

# of Lag screws	"ø" Lag screw diameter	"C_{edge}" min edge distance	"C_{end}" min end distance	Length of Lag Screw	"h_{min}" min member depth	Brace Attachment Designation at Brace Angle, 'θ'		
	(in)	(in)	(in)	(in)	(in)	30	45	60
1 screw	3/8	1 1/2	2 5/8	3	3 1/2	B2	B3	B5
	1/2	2	3 1/2	4	4 1/2	B3	B4	B7
	5/8	2 1/2	4 3/8	5	5 1/2	B4	B6	-
	3/4	3	5 1/4	6	6 1/2	B6	B7	-
2 screws	3/8	1 1/2	2 5/8	3	3 1/2	B3	B5	B7
	1/2	2	3 1/2	4	4 1/2	B5	B7	-
	5/8	2 1/2	4 3/8	5	5 1/2	B7	-	-
	3/4	3	5 1/4	6	6 1/2	-	-	-

NOTES:
1. POINT LOADING AT ANCHOR LOCATIONS ON THE BUILDING STRUCTURE TO BE VERIFIED BY OTHERS AND PROVIDE ADEQUATE BEAM BRACING AS REQUIRED.
2. DO NOT DRILL HOLES IN STRUCTURAL WOOD BEAMS WITHOUT WRITTEN APPROVAL FROM THE STRUCTURAL ENGINEER OF RECORD.
3. CAPACITIES IN THE SCHEDULE ARE BASED ON WOOD WITH A SPECIFIC GRAVITY OF 0.50 (DOUGLAS FIR - LARCH).
4. DRILL BOLT HOLES 1/16" LARGER THAN THE NOMINAL BOLT DIAMETER.
5. REFERENCE DETAILS IN SECTION 2 FOR ADDITIONAL BRACING INFORMATION.

GRIPPLE®
Gripple Inc
1611 Emily Lane
Aurora, IL 60502
T: +1 866 474 7753
E: grippleinc@gripple.com

Mahmoud Faghihi, PE, SE
California SE No. S5789

PAGE NUMBER: 3.6

DATE 7/11/2025

BRACE ATTACHMENT TO CONCRETE POST-TENSION CONCRETE SLAB USING CAST IN PLACE ANCHOR

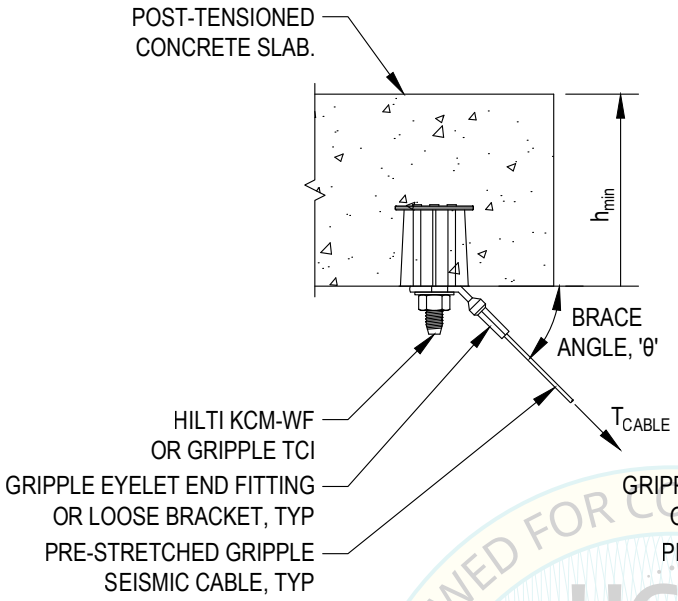

CAST IN INSERTS

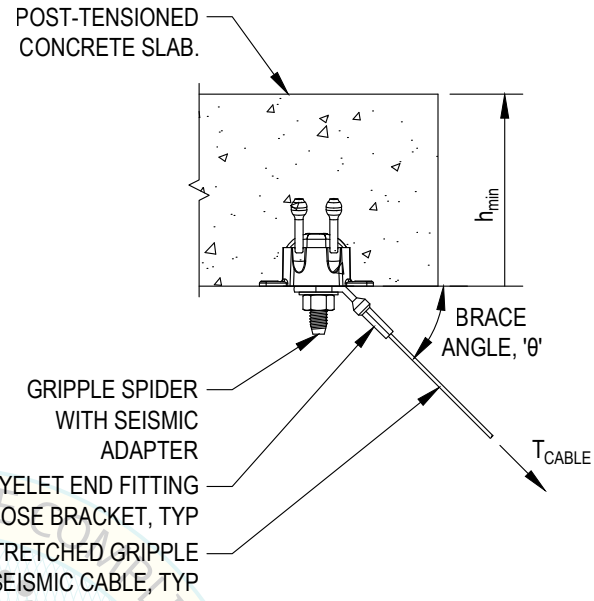

GRIPPLE SPIDER

REVIEWED FOR CODE COMPLIANCE
HCAi
OPM-0709
BY: William Staehlin
DATE: 07/19/2025
CALIFORNIA BUILDING CODE, 2022

NOTES:

1. OVER STRENGTH FACTOR = 2.0 PER ASCE 7-16 TABLE 13.6-1 HAS BEEN INCORPORATED INTO THE CAPACITIES PROVIDED IN THIS DETAIL.
2. POINT LOADING AT ANCHOR LOCATIONS ON THE BUILDING STRUCTURE TO BE VERIFIED BY OTHERS.
3. COORDINATE ANCHOR LOCATIONS WITH PT TENDONS, MILD REINFORCING, AND EMBEDDED PIPES AND CONDUITS.
4. REFERENCE DETAILS IN SECTION 2 FOR ADDITIONAL BRACING INFORMATION.
5. SEE PAGES 3.7.1 FOR ANCHOR TABLES.

GRIPPLE®

Gripple Inc
1611 Emily Lane
Aurora, IL 60502

T: +1 866 474 7753
E: grippleinc@gripple.com

Mahmoud Faghihi, PE, SE
California SE No. S5789

PAGE NUMBER: 3.7

DATE 7/11/2025

Table 3.7A – PT Concrete with Gripple TCI Anchor				
Brace Attachment Designation	**Anchor Type**	**Min Concrete Strength, f'c**	**"h_{min}" min conc thickness**	**"t_{cable}" Max Tension in Cable**
B2	TCI-WF w/ 5/64" diameter cable	3,000 psi	3"	300 lbs
B3	TCI-WF w/ 1/8" diameter cable	3,000 psi	3"	600 lbs

Table 3.7B – 4,000 psi PT Concrete with Hilti KCM-WF Kwik Cast Anchor							
Brace Attachment Designation	**Anchor type**	**"ø" Anchor Diameter**	**"h_{ef}" Effective Embed**	**"h_{min}" min conc thickness**	**Color Code**	**"t_{cable}" Max Tension in Cable**	**"Ω_0x t_{cable}" Max Anchorage Force**
B2	1/4" - 3/8"	3/8"	1 1/8"	2 1/2"	Green	300 lbs	600 lbs
B3	1/4" - 3/8" -1/2"	1/2"	1 5/8"	2 1/2"	Black	600 lbs	1200 lbs
B3	3/8" -1/2"	1/2"	1 5/8"	2 1/2"	Orange,Grey	600 lbs	1200 lbs
B4	3/8" -1/2"-5/8"	5/8"	2"	3"	Red	900 lbs	1800 lbs
B6	3/8" -1/2"-5/8"-3/4"	3/4"	3"	4"	Grey	1500 lbs	3000 lbs
B6	5/8"-3/4"	3/4"	2 1/2"	3 1/2"	Grey	1500 lbs	3000 lbs

REVIEWED FOR CODE COMPLIANCE
HCAi
OPM-0709
By: William Staehlin
DATE: 07/19/2025
CALIFORNIA BUILDING CODE, 2022

Table 3.7C – PT Concrete with Cast in place Gripple Spider					
Brace Attachment Designation	**Anchor Type**	**"ø" Anchor Diameter**	**Min Concrete Strength, f'c**	**"h_{min}" min conc thickness**	**"t_{cable}" Max Tension in Cable**
B4	SX-WF w/ SX-ADP-SEIS	3/4"	2,500 psi	4"	900 lbs

GRIPPLE®
Gripple Inc
1611 Emily Lane
Aurora, IL 60502
T: +1 866 474 7753
E: grippleinc@gripple.com

MFaghihi

Mahmoud Faghihi, PE, SE
California SE No. S5789

PAGE NUMBER: 3.7.1

DATE 7/11/2025

BRACE ATTACHMENT - OPEN WEB JOISTS

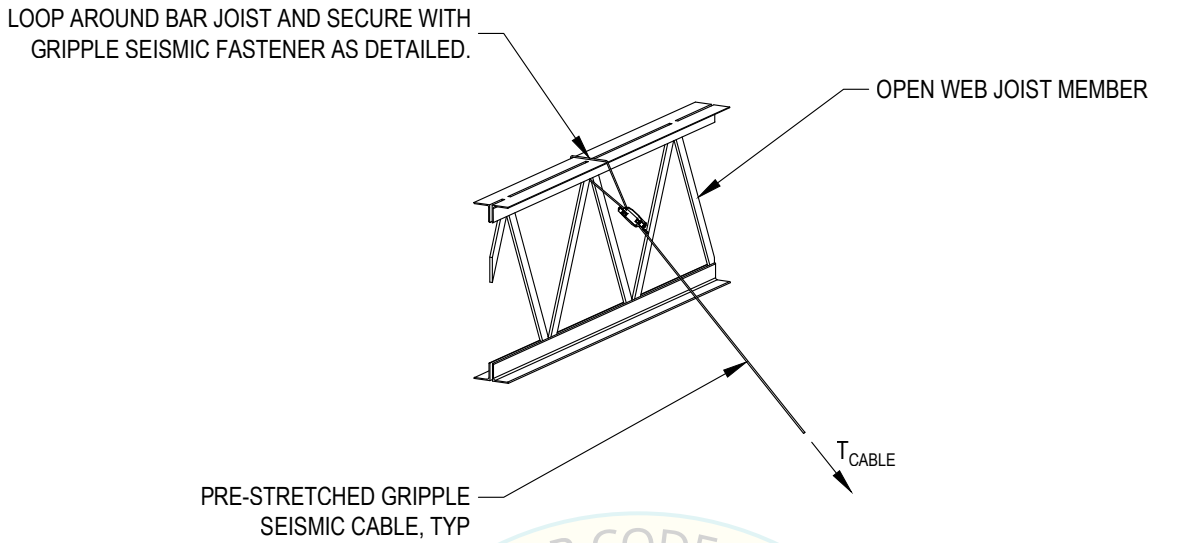

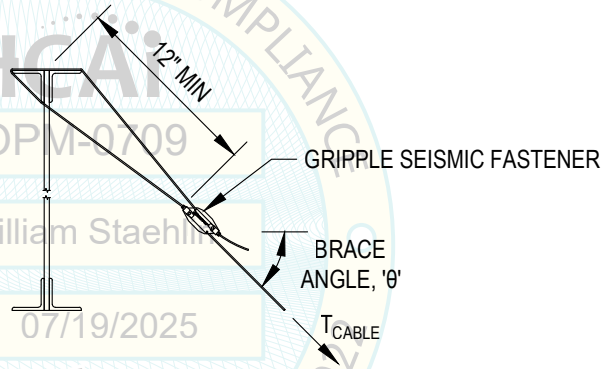

REVIEWED FOR CODE COMPLIANCE
HCAI
OPM-0709
BY: William Staehlin
DATE: 07/19/2025
CALIFORNIA BUILDING CODE, 2025

NOTES:

1. POINT LOADING AT ANCHOR LOCATIONS ON THE BUILDING STRUCTURE TO BE VERIFIED BY OTHERS AND PROVIDE ADEQUATE BEAM BRACING AS REQUIRED.
2. THE GRIPPLE SEISMIC CABLE SHALL ONLY BE ATTACHED TO THE TOP CHORD OF THE OPEN WEB JOIST MEMBER.
3. WHEN INSTALLING THE GRIPPLE SEISMIC FASTENER, LEAVE A 2" MINIMUM TAIL.
4. REFERENCE DETAILS IN SECTION 2 FOR ADDITIONAL BRACING INFORMATION.

GRIPPLE®

Gripple Inc
1611 Emily Lane
Aurora, IL 60502

T: +1 866 474 7753
E: grippleinc@gripple.com

Mahmoud Faghihi, PE, SE
California SE No. S5789

PAGE NUMBER: 3.8

DATE 7/11/2025

BRACE ATTACHMENT - METAL STUD FRAMED WALL

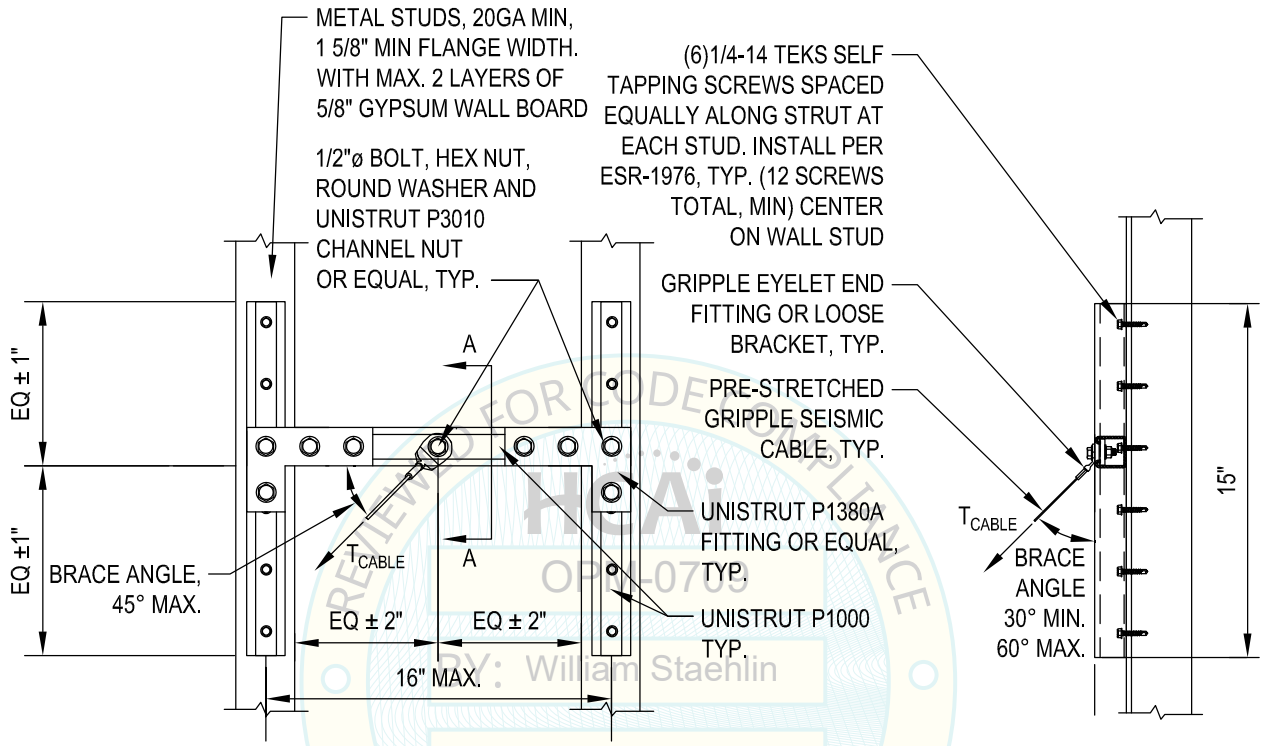

ELEVATION VIEW

SECTION A-A

REVIEWED FOR CODE COMPLIANCE
HCAi
OPM-0709
BY: William Staehlin
DATE: 07/19/2025
CALIFORNIA BUILDING CODE, 2022

WALL STUD THICKNESS	T CABLE MAX. - LBS
33 MIL STRUCT (20 GA.)	250
43 MIL (18 GA.)	350
54 MIL (16 GA.)	450

NOTES:

1. POINT LOADING AT ANCHOR LOCATIONS ON THE BUILDING STRUCTURE TO BE VERIFIED BY OTHERS AND PROVIDE ADEQUATE BRACING AS REQUIRED.
2. ALL STUDS SHALL BE fy = 33 KSI MIN.
3. REFERENCE DETAILS IN SECTION 2 FOR ADDITIONAL BRACING INFORMATION.
4. TIGHTEN 1/2" BOLTS AND CHANNEL NUTS TO A TORQUE OF 50 FT-LBS.
5. WALL STUDS AND BACKING DESIGNED BY SEOR.

GRIPPLE®

Gripple Inc
1611 Emily Lane
Aurora, IL 60502

T: +1 866 474 7753
E: grippleinc@gripple.com

Mahmoud Faghihi, PE, SE
California SE No. S5789

PAGE NUMBER: 3.9

DATE 7/11/2025

HANGER ROD ATTACHMENT TO CONCRETE SLAB USING EXPANSION ANCHORS

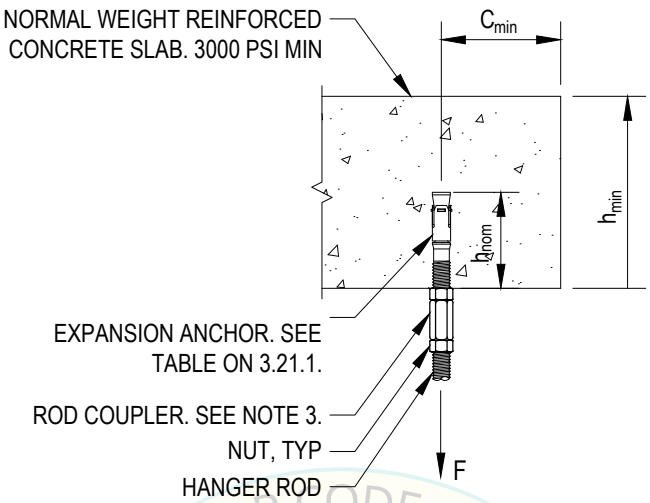

REVIEWED FOR CODE COMPLIANCE
HCAi
OPM-0709
BY: William Staehlin
DATE: 07/19/2025
CALIFORNIA BUILDING CODE, 2022

NOTES:

1. FORCE, F, IS THE FACTORED DEAD LOAD PLUS THE VERTICAL SEISMIC LOAD WHERE OCCURS: (1.2 + 0.2Sds)*D.
2. INSTALL EXPANSION ANCHORS PER NOTES ON PAGE 1.21.
3. ROD COUPLER SHALL BE HEAVY HEX PER ASTM A194-2H OR A563-DH. HANGER ROD AND ANCHOR BOLT THREAD ENGAGEMENT INTO COUPLING NUT MUST EQUAL THE DIAMETER OF THE ROD/ANCHOR MIN. ROD AND ANCHOR BOLT MUST BE TIGHTENED SO THEY ARE IN CONTACT WITH EACH OTHER IN THE COUPLER.
4. POINT LOADING AT ANCHOR LOCATIONS ON THE BUILDING STRUCTURE TO BE VERIFIED BY OTHERS.
5. LOCATE AND AVOID REINFORCING STEEL PRIOR TO INSTALLING ANCHORS. AVOID DAMAGING REINFORCING STEEL.
6. REFERENCE DETAILS IN SECTION 2 FOR ADDITIONAL BRACING INFORMATION.
7. SEE PAGES 3.21.1 FOR ANCHOR TABLES.

GRIPPLE®
Gripple Inc
1611 Emily Lane
Aurora, IL 60502
T: +1 866 474 7753
E: grippleinc@gripple.com

Mahmoud Faghihi, PE, SE
California SE No. S5789

PAGE NUMBER: 3.21

DATE 7/11/2025

Table 3.21A – Hilti KB-TZ2 into 3,000 psi NW Reinf Concrete Slab						
Hanger Rod Attachment Designation	"ø" Anchor diameter	"h_{nom}" Nominal Embed	"h_{ef}" Effective Embed	"C_{min}" min edge distance	"h_{min}" min conc thickness	"F" Max Hanger Force
R3	3/8"	2 1/2"	2"	4"	4"	1000 lbs
R4	1/2"	3"	2 1/2"	5"	5"	1500 lbs
R6	5/8"	3 3/4"	3 1/4"	6"	6"	2500 lbs
R7	3/4"	4 1/2"	3 3/4"	6"	6"	3000 lbs

Table 3.21B – Dewalt Power-Stud SD2 into 3,000 psi NW Reinf Concrete Slab						
Hanger Rod Attachment Designation	"ø" Anchor diameter	"h_{nom}" Nominal Embed	"h_{ef}" Effective Embed	"C_{min}" min edge distance	"h_{min}" min conc thickness	"F" Max Hanger Force
R3	3/8"	2 3/8"	2"	4"	4"	1000 lbs
R4	1/2"	2 1/2"	2"	4"	5"	1500 lbs
R6	5/8"	3 7/8"	3 1/4"	5"	6"	2500 lbs
R7	3/4"	4 1/2"	3 3/4"	6"	7"	3000 lbs

Table 3.21C – Simpson Strongbolt into 3,000 psi NW Reinf Concrete Slab						
Hanger Rod Attachment Designation	"ø" Anchor diameter	"h_{nom}" Nominal Embed	"h_{ef}" Effective Embed	"C_{min}" min edge distance	"h_{min}" min conc thickness	"F" Max Hanger Force
R2	3/8"	2 1/4"	1 7/8"	6"	4"	600 lbs
R3	3/8"	2 7/8"	2 1/2"	6"	5"	1000 lbs
R4	1/2"	3"	2 1/2"	6"	5"	1500 lbs
R5	1/2"	3 1/2"	3"	6"	6"	2000 lbs
R6	5/8"	4 3/8"	3 3/4"	7"	7"	2500 lbs
R7	3/4"	4 3/4"	4"	7"	8"	3000 lbs

REVIEWED FOR CODE COMPLIANCE
HCAI
OPM-0709
BY: William Staehlin
DATE: 07/19/2025
CALIFORNIA BUILDING CODE 2022

GRIPPLE®
Gripple Inc
1611 Emily Lane
Aurora, IL 60502
T: +1 866 474 7753
E: grippleinc@gripple.com

Mahmoud Faghihi, PE, SE
California SE No. S5789

PAGE NUMBER: 3.21.1

DATE 7/11/2025

HANGER ROD ATTACHMENT TO CONCRETE WALL OR BEAM USING EXPANSION ANCHORS

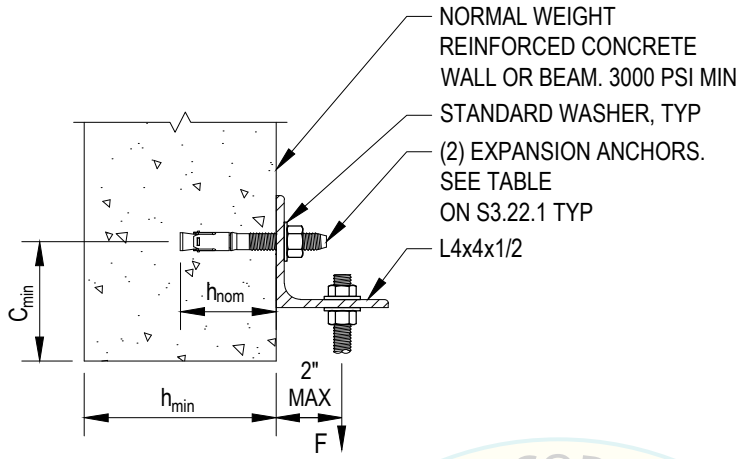

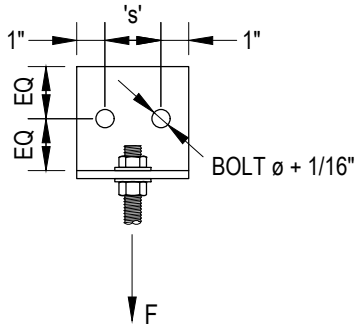

REVIEWED FOR CODE COMPLIANCE
HCAi
OPM-0709
BY: William Staehlin
DATE: 07/19/2025
CALIFORNIA BUILDING CODE, 2022

NOTES:

1. FORCE, F, IS THE FACTORED DEAD LOAD PLUS THE VERTICAL SEISMIC LOAD WHERE OCCURS: (1.2 + 0.2Sds)*D.
2. INSTALL EXPANSION ANCHORS PER NOTES ON PAGE 1.21.
3. ROD COUPLER SHALL BE HEAVY HEX PER ASTM A194-2H OR A563-DH. HANGER ROD AND ANCHOR BOLT THREAD ENGAGEMENT INTO COUPLING NUT MUST EQUAL THE DIAMETER OF THE ROD/ANCHOR MIN. ROD AND ANCHOR BOLT MUST BE TIGHTENED SO THEY ARE IN CONTACT WITH EACH OTHER IN THE COUPLER.
4. POINT LOADING AT ANCHOR LOCATIONS ON THE BUILDING STRUCTURE TO BE VERIFIED BY OTHERS.
5. LOCATE AND AVOID REINFORCING STEEL PRIOR TO INSTALLING ANCHORS. AVOID DAMAGING REINFORCING STEEL.
6. REFERENCE DETAILS IN SECTION 2 FOR ADDITIONAL BRACING INFORMATION.
7. SEE PAGES 3.22.1 FOR ANCHOR TABLES.

GRIPPLE®
Gripple Inc
1611 Emily Lane
Aurora, IL 60502
T: +1 866 474 7753
E: grippleinc@gripple.com

Mahmoud Faghihi, PE, SE
California SE No. S5789

PAGE NUMBER: 3.22

DATE 7/11/2025

Table 3.22A – (2) Hilti KB-TZ2 into 3,000 psi NW Reinf Concrete Wall/Beam							
Hanger Rod Attachment Designation	"ø" Anchor diameter	"h_{nom}" Nominal Embed	"h_{ef}" Effective Embed	"C_{min}" min edge distance	"h_{min}" min conc thickness	"s" spacing between anchor bolts	"F" Max Hanger Force
R3	1/4"	1 3/4"	1 1/2"	4"	4"	2"	1000 lbs
R5	3/8"	2 1/2"	2"	4"	6"	3"	2000 lbs
R6	3/8"	3"	2 1/2"	6"	6"	3"	2500 lbs
R7	1/2"	3 3/4"	3 1/4"	6"	8"	3"	3000 lbs

Table 3.22B – (2) Dewalt Power-Stud SD2 into 3,000 psi NW Reinf Concrete Wall/Beam							
Hanger Rod Attachment Designation	"ø" Anchor diameter	"h_{nom}" Nominal Embed	"h_{ef}" Effective Embed	"C_{min}" min edge distance	"h_{min}" min conc thickness	"s" spacing between anchor bolts	"F" Max Hanger Force
R3	3/8"	2 3/8"	2"	4"	4"	3 1/2"	1000 lbs
R5	1/2"	2 1/2"	2"	4"	5"	6"	2000 lbs
R6	1/2"	3 3/4"	3 1/4"	5"	6"	6"	2500 lbs
R7	5/8"	3 7/8"	3 1/4"	5"	6"	6"	3000 lbs

Table 3.22C – (2) Simpson Strongbolt into 3,000 psi NW Reinf Concrete Wall/Beam							
Hanger Rod Attachment Designation	"ø" Anchor diameter	"h_{nom}" Nominal Embed	"h_{ef}" Effective Embed	"C_{min}" min edge distance	"h_{min}" min conc thickness	"s" spacing between anchor bolts	"F" Max Hanger Force
R5	3/8"	2 1/4"	1 7/8"	6"	4"	3"	2000 lbs
R7	1/2"	2 3/4"	2 1/4"	6"	4"	6"	3000 lbs

REVIEWED FOR CODE COMPLIANCE
HCAi
OPM-0709
BY: William Staehlin
DATE: 07/19/2025
CALIFORNIA BUILDING CODE, 2022

GRIPPLE®
Gripple Inc
1611 Emily Lane
Aurora, IL 60502
T: +1 866 474 7753
E: grippleinc@gripple.com

Mahmoud Faghihi, PE, SE
California SE No. S5789

PAGE NUMBER: 3.22.1

DATE 7/11/2025

HANGER ROD ATTACHMENT - UNDERSIDE OF CONCRETE FILL OVER METAL DECK (MAX 1 1/2" DEEP) - EXPANSION ANCHORS

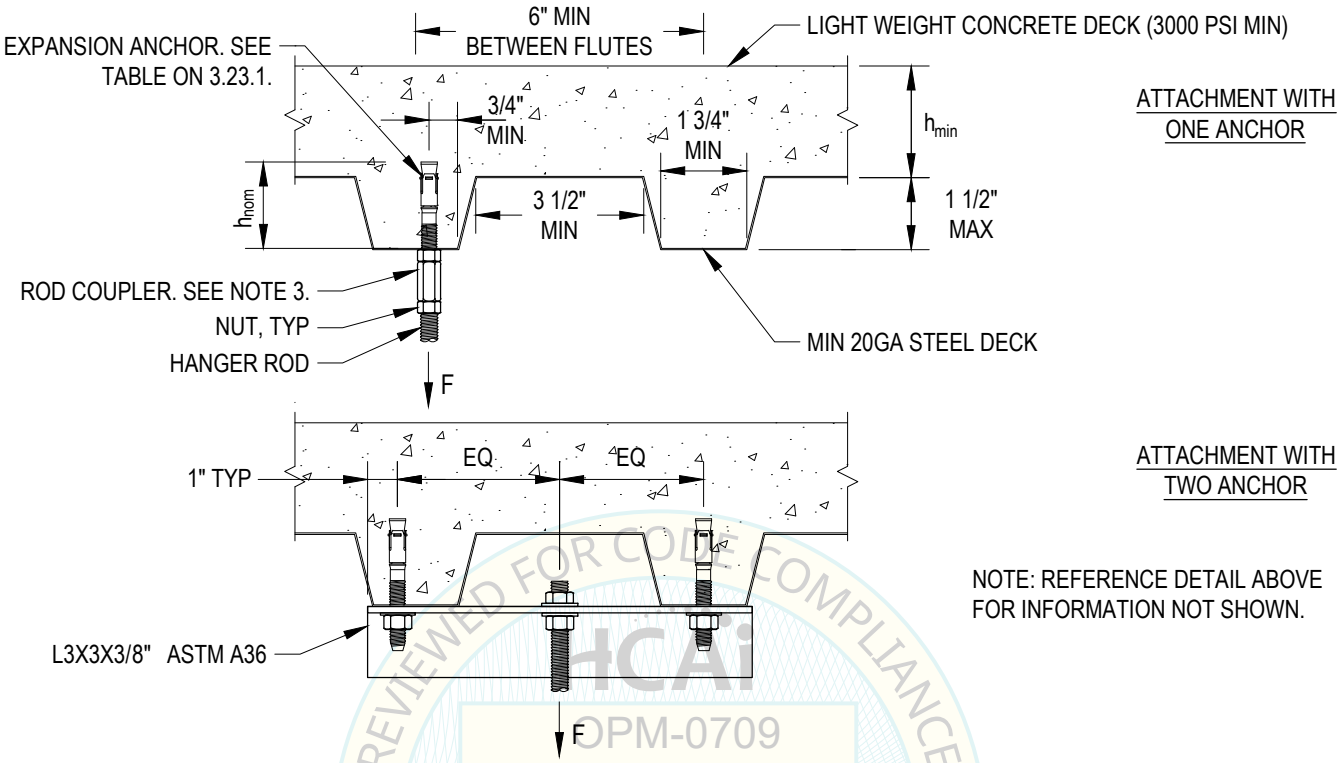

NOTE: REFERENCE DETAIL ABOVE FOR INFORMATION NOT SHOWN.

REVIEWED FOR CODE COMPLIANCE
HCAi
OPM-0709
BY: William Staehlin
DATE: 07/19/2025
CALIFORNIA BUILDING CODE, 2022

NOTES:

1. FORCE, F, IS THE FACTORED DEAD LOAD PLUS THE VERTICAL SEISMIC LOAD WHERE OCCURS: (1.2 + 0.2Sds)*D.
2. INSTALL EXPANSION ANCHORS PER NOTES ON PAGE 1.21.
3. ROD COUPLER SHALL BE HEAVY HEX PER ASTM A194-2H OR A563-DH. HANGER ROD AND ANCHOR BOLT THREAD ENGAGEMENT INTO COUPLING NUT MUST EQUAL THE DIAMETER OF THE ROD/ANCHOR MIN. ROD AND ANCHOR BOLT MUST BE TIGHTENED SO THEY ARE IN CONTACT WITH EACH OTHER IN THE COUPLER.
4. POINT LOADING AT ANCHOR LOCATIONS ON THE BUILDING STRUCTURE TO BE VERIFIED BY OTHERS.
5. LOCATE AND AVOID REINFORCING STEEL PRIOR TO INSTALLING ANCHORS. AVOID DAMAGING REINFORCING STEEL.
6. REFERENCE DETAILS SEE IN SECTION 2 FOR ADDITIONAL BRACING INFORMATION.
7. SEE PAGES 3.23.1 FOR ANCHOR TABLES.

GRIPPLE®

Gripple Inc
1611 Emily Lane
Aurora, IL 60502

T: +1 866 474 7753
E: grippleinc@gripple.com

Mahmoud Faghihi, PE, SE
California SE No. S5789

PAGE NUMBER: 3.23

DATE 7/11/2025

Table 3.23A – Hilti KB-TZ2 into 3,000 psi LW Concrete Fill over 1 1/2" Deep Metal Deck						
	Hanger Rod Attachment Designation	"ø" Anchor diameter	"h_{nom}" Nominal Embed	"h_{ef}" Effective Embed	"h_{min}" min conc thickness	"F" Max Hanger Force
One Anchor	R1	3/8"	1 7/8"	1 1/2"	2 1/2"	300 lbs
	R2	3/8"	2 1/2"	2"	2 1/2"	600 lbs
	R4	5/8"	3 1/4"	2 3/4"	3 1/2"	1500 lbs
Two Anchors	R2	3/8"	1 7/8"	1 1/2"	2 1/2"	600 lbs
	R4	3/8"	2 1/2"	2"	2 1/2"	1500 lbs
	R5	5/8"	3 1/4"	2 3/4"	3 1/2"	2000 lbs

Table 3.23B – Dewalt Power-Stud SD2 into 3,000 psi LW Concrete Fill over 1 1/2" Deep Metal Deck						
	Hanger Rod Attachment Designation	"ø" Anchor diameter	"h_{nom}" Nominal Embed	"h_{ef}" Effective Embed	"h_{min}" min conc thickness	"F" Max Hanger Force
One Anchor	R2	3/8"	2 3/8"	2"	3 1/4"	600 lbs
Two Anchors	R4	3/8"	2 3/8"	2"	3 1/4"	1500 lbs

REVIEWED FOR CODE COMPLIANCE
HCAI
OPM-0709
William
DATE: 07/19/2025
CALIFORNIA BUILDING CODE, 2022

GRIPPLE®
Gripple Inc
1611 Emily Lane
Aurora, IL 60502
T: +1 866 474 7753
E: grippleinc@gripple.com

Mahmoud Faghihi, PE, SE
California SE No. S5789

PAGE NUMBER: 3.23.1

DATE 7/11/2025

HANGER ROD ATTACHMENT - UNDERSIDE OF BARE METAL DECK - TEK SCREWS

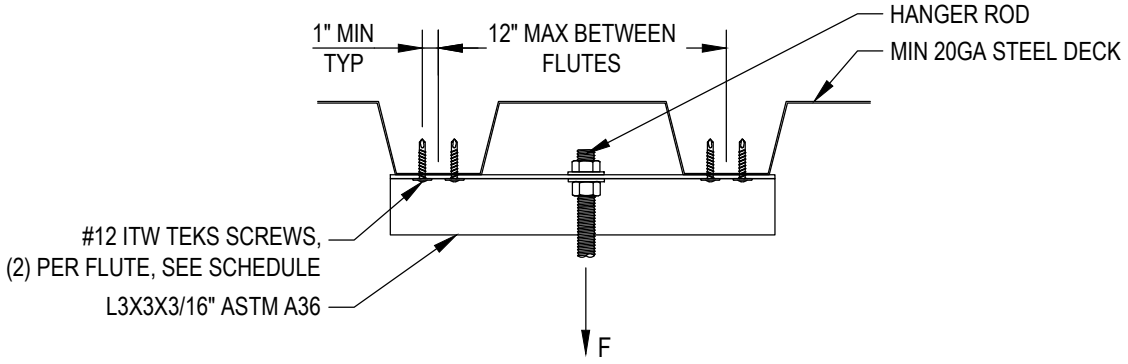

REVIEWED FOR CODE COMPLIANCE
HCAi
OPM-0709
BY: William Staehlin
DATE: 07/19/2025
CALIFORNIA BUILDING CODE 2022

Table 3.24 – TEK Screws to Bare Metal Deck		
Hanger Rod Attachment Designation	**Number of #12 screws**	**"F" Max Hanger Force**
		(lbs)
R1	4	300 lbs

NOTES:
1. POINT LOADING AT ANCHOR LOCATIONS ON THE BUILDING STRUCTURE TO BE VERIFIED BY OTHERS.
2. FOR ITW TEKS SCREWS, REFERENCE ICC - ESR 1976.
3. REFERENCE DETAILS IN SECTION 2 FOR ADDITIONAL BRACING INFORMATION.

GRIPPLE®
Gripple Inc
1611 Emily Lane
Aurora, IL 60502
T: +1 866 474 7753
E: grippleinc@gripple.com

Mahmoud Faghihi, PE, SE
California SE No. S5789

PAGE NUMBER: 3.24

DATE 7/11/2025

HANGER ROD ATTACHMENT - WOOD BEAM - THRU BOLT

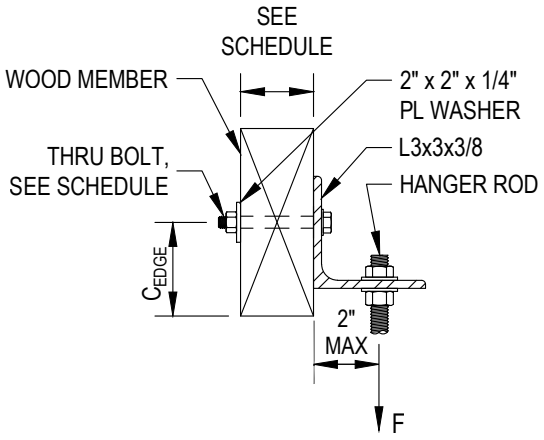

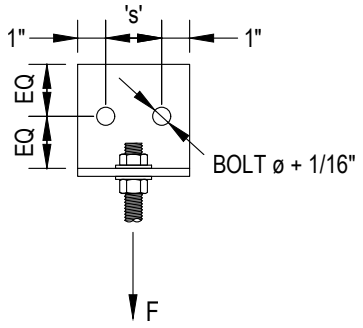

Table 3.25 – Thru-Bolt Perpendicular to Wood Member						
Member Size	**Hanger Rod Attachment Designation**	**"ø" Anchor diameter**	**"C_{edge}" min edge distance**	**"C_{end}" min end distance**	**"s" spacing between anchor bolts**	**"F" Max Hanger Force**
		(in)	(in)	(in)	(in)	(lbs)
2x (1 1/2")	R1	1/2	2	3 1/2	2 1/2	300
	R2	3/4	3	5 1/4	4	600
3x (2 1/2")	R2	1/2	2	3 1/2	2 1/2	300
	R3	5/8	2 1/2	4 3/8	3 1/2	1000
4x (3 1/2")	R3	1/2	2	3 1/2	2 1/2	1000
	R4	3/4	3	5 1/4	4	1500

REVIEWED FOR CODE COMPLIANCE
HCAi
OPM-0709
BY: William Staehlin
DATE: 07/19/2025
OPM BUILDING CODE

NOTES:
1. POINT LOADING AT ANCHOR LOCATIONS ON THE BUILDING STRUCTURE TO BE VERIFIED BY OTHERS AND PROVIDE ADEQUATE BEAM BRACING AS REQUIRED.
2. DO NOT DRILL HOLES IN STRUCTURAL WOOD BEAMS WITHOUT WRITTEN APPROVAL FROM THE STRUCTURAL ENGINEER OF RECORD.
3. CAPACITIES IN THE SCHEDULE ARE BASED ON WOOD WITH A SPECIFIC GRAVITY OF 0.50 (DOUGLAS FIR - LARCH).
4. DRILL BOLT HOLES 1/16" LARGER THAN THE NOMINAL BOLT DIAMETER.
5. PROVIDE ASTM A307 MINIMUM THRU BOLTS.
6. REFERENCE DETAILS IN SECTION 2 FOR ADDITIONAL BRACING INFORMATION.

GRIPPLE®
Gripple Inc
1611 Emily Lane
Aurora, IL 60502
T: +1 866 474 7753
E: grippleinc@gripple.com

Mahmoud Faghihi, PE, SE
California SE No. S5789

PAGE NUMBER: 3.25

DATE 7/11/2025

HANGER ROD ATTACHMENT - WOOD BEAM - LAG SCREWS

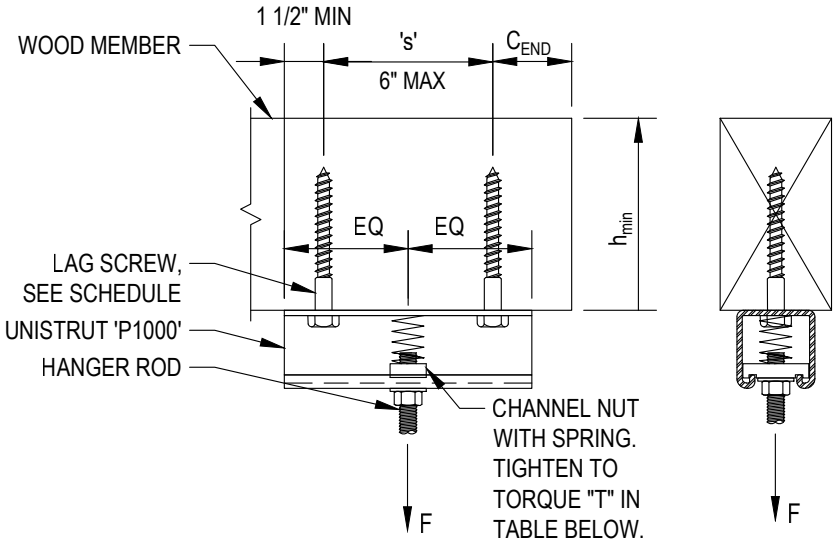

Table 3.26 – (2) Lag Screws to Wood Member							
Hanger Rod Attachment Designation	"ø" Lag screw diameter	"C_{edge}" min edge distance	"C_{end}" min end distance	Length of Lag Screw	"h_{min}" min member thickness	"s" min lag screw spacing	"F" Max Hanger Force
	(in)	(in)	(in)	(in)	(in)	(in)	(lbs)
R3	3/8	1 1/2	2 5/8	3	3 1/2	2	1000 lbs
R5	1/2	2	3 1/2	4	4 1/2	2	2000 lbs

Hanger rod to Unistrut	
Hanger rod diameter	"T" Recommended torque, (max in brackets)
(in)	(ft-lbs)
1/2	50 (55)
5/8	100 (110)

APPROVED FOR CODE COMPLIANCE
HCAI
OPM-0709
BY: William Staehlin
DATE: 07/19/2025
CALIFORNIA BUILDING CODE, 2022

NOTES:

1. POINT LOADING AT ANCHOR LOCATIONS ON THE BUILDING STRUCTURE TO BE VERIFIED BY OTHERS AND PROVIDE ADEQUATE BEAM BRACING AS REQUIRED.
2. DO NOT DRILL HOLES IN STRUCTURAL WOOD BEAMS WITHOUT WRITTEN APPROVAL FROM THE STRUCTURAL ENGINEER OF RECORD.
3. CAPACITIES IN THE SCHEDULE ARE BASED ON WOOD WITH A SPECIFIC GRAVITY OF 0.50 (DOUGLAS FIR - LARCH).
4. DRILL BOLT HOLES 1/16" LARGER THAN THE NOMINAL BOLT DIAMETER.
5. PROVIDE ASTM A307 MINIMUM THRU BOLTS.
6. REFERENCE DETAILS IN SECTION 2 FOR ADDITIONAL BRACING INFORMATION.

GRIPPLE®
Gripple Inc
1611 Emily Lane
Aurora, IL 60502
T: +1 866 474 7753
E: grippleinc@gripple.com

Mahmoud Faghihi, PE, SE
California SE No. S5789

PAGE NUMBER: 3.26

DATE 7/11/2025

HANGER ROD ATTACHMENT TO POST-TENSION CONCRETE SLAB USING CAST IN PLACE ANCHOR

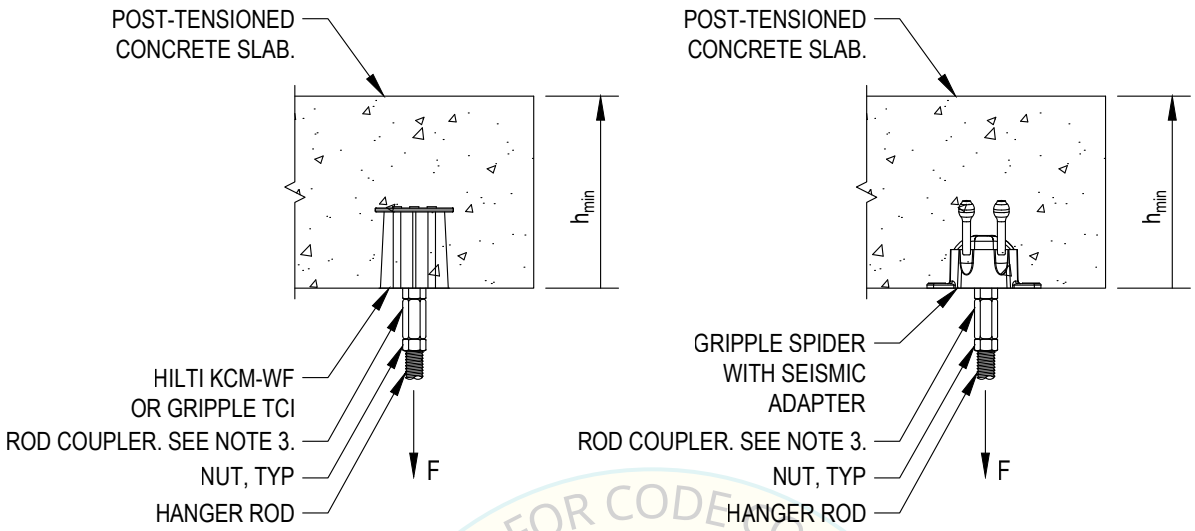

CAST IN INSERT

GRIPPLE SPIDER

REVIEWED FOR CODE COMPLIANCE
HCAi
OPM-0709
BY: William Staehlin
DATE: 07/19/2025
CALIFORNIA BUILDING CODE, 2022

NOTES:

1. FORCE, F, IS THE FACTORED DEAD LOAD PLUS THE VERTICAL SEISMIC LOAD WHERE OCCURS: (1.2 + 0.2Sds)*D.
2. POINT LOADING AT ANCHOR LOCATIONS ON THE BUILDING STRUCTURE TO BE VERIFIED BY OTHERS.
3. COORDINATE ANCHOR LOCATIONS WITH PT TENDONS, MILD REINFORCING, AND EMBEDDED PIPES AND CONDUITS.
4. REFERENCE DETAILS IN SECTION 2 FOR ADDITIONAL BRACING INFORMATION.
5. SEE PAGES 3.27.1 FOR ANCHOR TABLES.

GRIPPLE®

Gripple Inc
1611 Emily Lane
Aurora, IL 60502

T: +1 866 474 7753
E: grippleinc@gripple.com

Mahmoud Faghihi, PE, SE
California SE No. S5789

PAGE NUMBER: 3.27

DATE 7/11/2025

Table 3.27A – PT Concrete with Gripple TCI Anchor				
Hanger Rod Attachment Designation	Anchor Type	Min Concrete Strength, f'c	"h_{min}" min conc thickness	"F" Max Hanger Force
R2	TCI-WF W/ 3/8" thread	3,000 psi	3"	600 lbs
R2	TCI-WF W/ 1/2" thread	3,000 psi	3"	600 lbs

Table 3.27B – 4,000 psi PT Concrete with Hilti KCM-WF Kwik Cast Anchor						
Hanger Rod Attachment Designation	Anchor type	"ø" Anchor Diameter	"h_{ef}" Effective Embed	"h_{min}" min conc thickness	Color Code	"F" Max Hanger Force
R2	1/4" - 3/8"	3/8"	1 1/8"	2 1/2"	Green	600 lbs
R4	1/4" - 3/8" -1/2"	1/2"	1 5/8"	2 1/2"	Black	1500 lbs
R5	3/8" -1/2"-5/8"	5/8"	2"	3"	Red	2000 lbs
R7	3/8" -1/2"-5/8"-3/4"	3/4"	3"	4"	Grey	3000 lbs

REVIEWED FOR CODE COMPLIANCE
HCAI
OPM-0709
BY: William Staehlin
DATE: 07/19/2025
CALIFORNIA BUILDING CODE, 2022

Table 3.27C – PT Concrete with Cast in place Gripple Spider					
Hanger Rod Attachment Designation	Anchor Type	"ø" Anchor Diameter	Min Concrete Strength, f'c	"h_{min}" min conc thickness	"F" Max Hanger Force
R4	SX-WF-LP w/ SX-ADP-SEIS	3/4"	2,500 psi	3"	1500 lbs
R6	SX-WF w/ SX-ADP-SEIS	3/4"	2,500 psi	4"	2500 lbs
R7	SX-WF w/ SX-ADP-SEIS	3/4"	6,000 psi	4"	3000 lbs

GRIPPLE®
Gripple Inc
1611 Emily Lane
Aurora, IL 60502
T: +1 866 474 7753
E: grippleinc@gripple.com

Mahmoud Faghihi, PE, SE
California SE No. S5789

PAGE NUMBER: 3.27.1

DATE 7/11/2025

Section 4 - Brace and Hanger Components

REVIEWED FOR CODE COMPLIANCE
HCAi
OPM-0709
BY: William Staehlin
DATE: 07/19/2025
CALIFORNIA BUILDING CODE, 2022

ROD STIFFENER DETAIL AND REQUIREMENTS

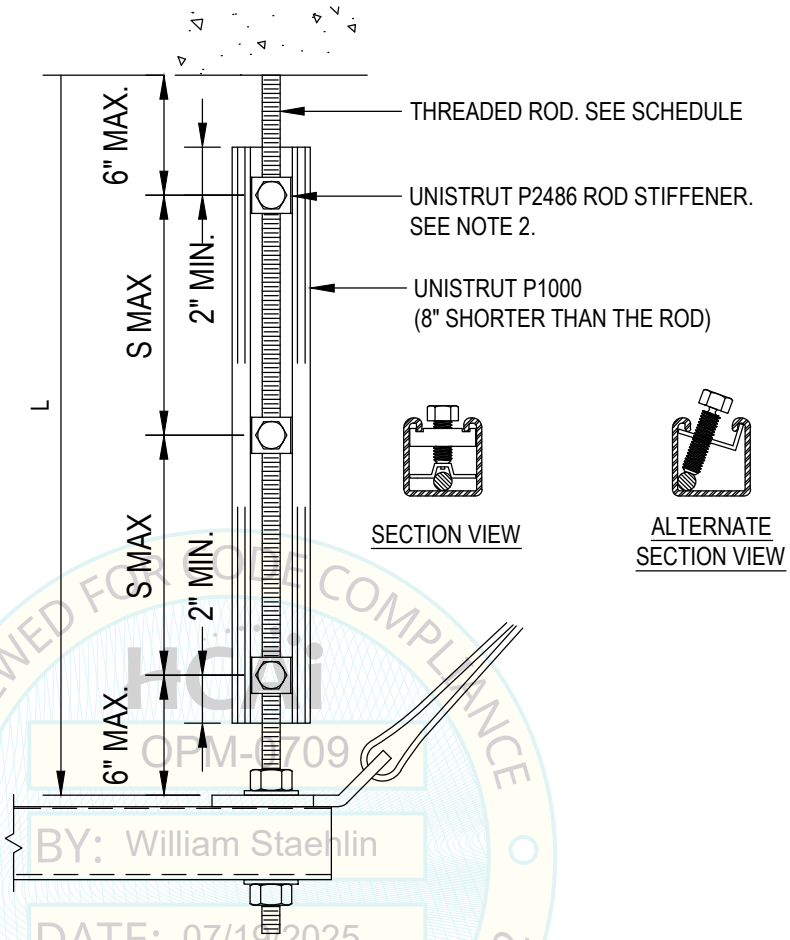

REVIEWED FOR CODE COMPLIANCE
HCAI
OPM-0709
BY: William Staehlin
DATE: 07/19/2025
CALIFORNIA BUILDING CODE 2022

ROD DIAMETER	S MAX	MAX COMPRESSIVE FORCE, P_{CR}	HANGER ROD TENSILE STRENGTH
3/8"	14"	440 LBS	1403 LBS
1/2"	20"	739 LBS	2597 LBS
5/8"	25"	1218 LBS	4168 LBS
3/4"	31"	1766 LBS	6223 LBS

NOTES:

1. DESIGN STRENGTHS BASED ON AISC 360 AND GRADE A36 STEEL THREADED RODS.
2. AT INSTALLER'S OPTION, BADGER INDUSTRIES RS-1 ROD STIFFENER MAY BE USED IN LIEU OF THE UNISTRUT P2486 ROD STIFFENER. TIGHTEN UNTIL BOLT HEAD BREAKS OFF. SEE ALTERNATE SECTION VIEW. SPECIFIED STIFFENER SPACING AND CAPACITIES STILL APPLY.
3. STRUCTURAL ATTACHMENT OF THE HANGER ROD MAY HAVE A LOWER CAPACITY.
4. DETERMINE IF STIFFENERS ARE REQUIRED AS FOLLOWS:
   - 4.1. ROD STIFFENERS ARE NOT REQUIRED IF THE ROD IS IN TENSION.
   - 4.2. ROD STIFFENERS ARE NOT REQUIRED IF $L < S\ MAX$ AND $P < P_{cr}$
   - 4.3. ROD STIFFENERS ARE REQUIRED IF $L > S\ MAX$ OR $P > P_{cr}$

GRIPPLE®
Gripple Inc
1611 Emily Lane
Aurora, IL 60502
T: +1 866 474 7753
E: grippleinc@gripple.com

Mahmoud Faghihi, PE, SE
California SE No. S5789

PAGE NUMBER: 4.1

DATE 7/11/2025

GRIPPLE SEISMIC FASTENER

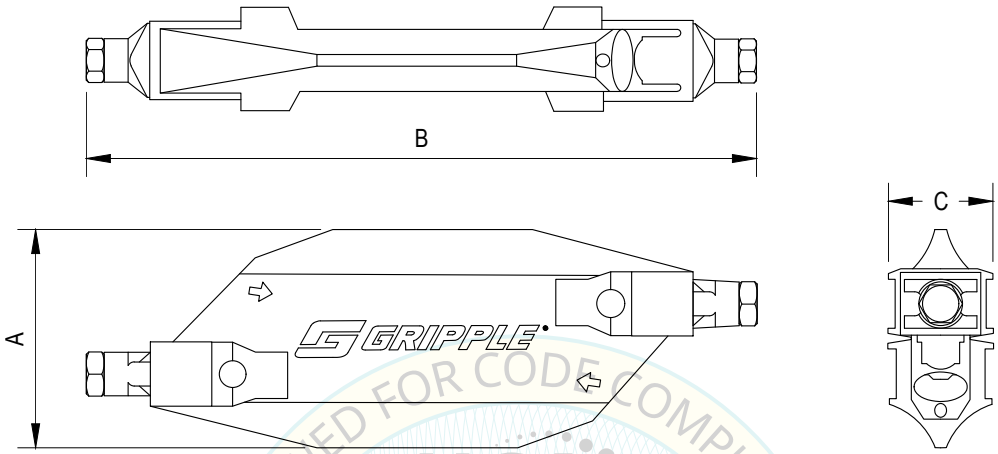

REVIEWED FOR CODE COMPLIANCE
HCAi
OPM-0709
BY: William Staehlin
DATE: 07/19/2025
CALIFORNIA BUILDING CODE 2022

PART NUMBER	DIMENSIONS			CABLE SIZE	CABLE CONSTRUCTION
	A	B	C		
GS10	1 9/64"	2 15/16"	33/64"	1/6"	7 x 7
GS12	1 9/64"	3 1/4"	35/64"	1/8"	7 x 7
GS19	1 11/32"	3 3/4"	9/16"	3/16"	7 x 19
GS25	1 23/32"	4 21/32"	11/16"	1/4"	7 x 19

GRIPPLE®

Gripple Inc
1611 Emily Lane
Aurora, IL 60502

T: +1 866 474 7753
E: grippleinc@gripple.com

Mahmoud Faghihi, PE, SE
California SE No. S5789

PAGE NUMBER: 4.2

DATE 7/11/2025

GRIPPLE EYELET END FITTING

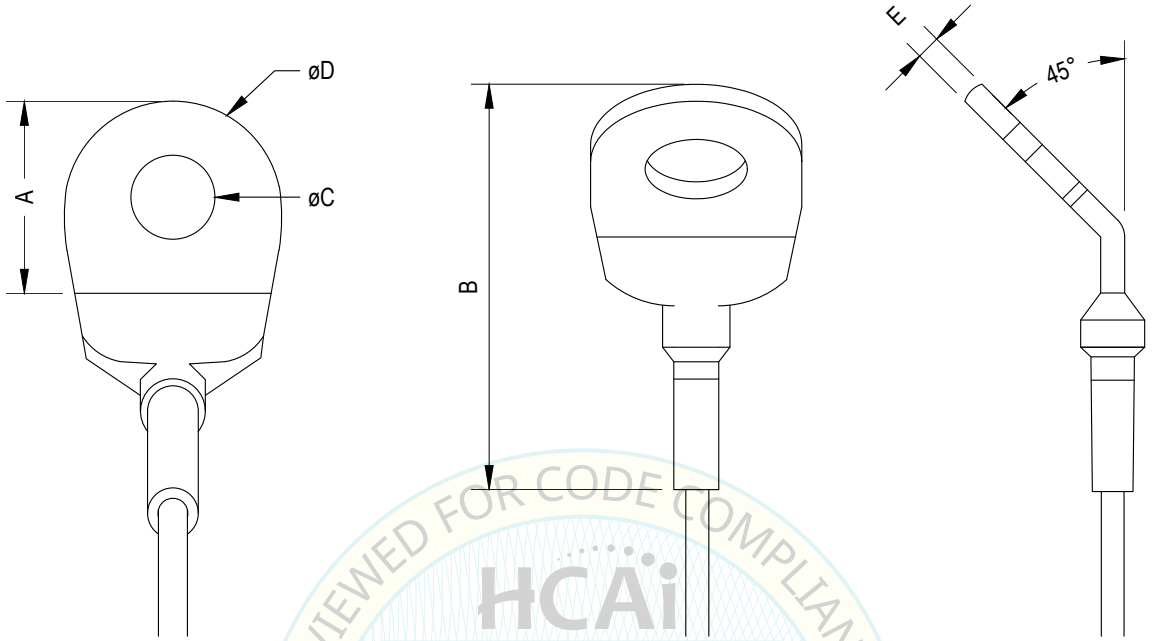

REVIEWED FOR CODE COMPLIANCE
HCAi
OPM-0709
BY: William Staehlin
DATE: 07/19/2025
CALIFORNIA BUILDING CODE 2022

EYELET PART NUMBER	DIMENSIONS				
	A	B	øC	øD	E
GSE4	1"	1 29/32"	53/64"	7/16"	1/8"

GRIPPLE®

Gripple Inc
1611 Emily Lane
Aurora, IL 60502

T: +1 866 474 7753
E: grippleinc@gripple.com

Mahmoud Faghihi, PE, SE
California SE No. S5789

PAGE NUMBER: 4.3

DATE 7/11/2025

GRIPPLE LOOSE STANDARD BRACKET

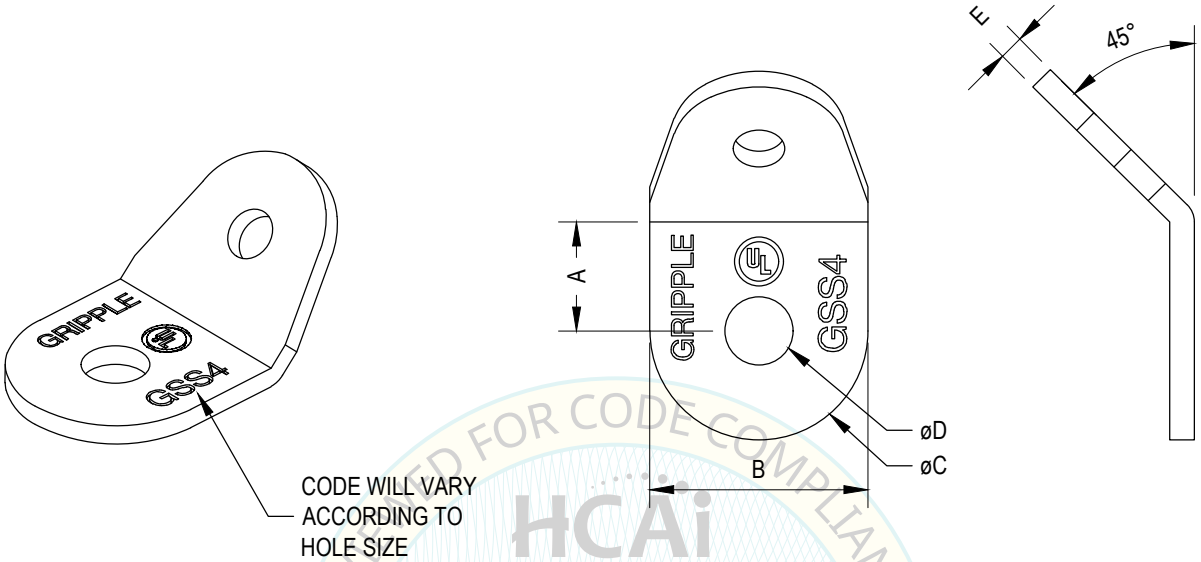

REVIEWED FOR CODE COMPLIANCE
HCAi
OPM-0709
BY: William Staehlin
DATE: 07/19/2025
CALIFORNIA BUILDING CODE, 2022

PART NUMBER	BOLT DIAMETER	DIMENSIONS				
		A	B	øC	øD	E
GSS4	3/8"	25/32"	1 9/16"	1 9/16"	7/16"	5/32"
GSS5	1/2"	13/16"	1 9/16"	1 21/32"	9/16"	5/32"
GSS6	5/8"	13/16"	1 9/16"	1 21/32"	11/16"	5/32"
GSS8	3/4"	1"	1 31/32"	1 31/32"	13/16"	5/32"
GSS10	7/8"	1 1/16"	1 31/32"	1 31/32"	1 1/8"	5/32"

GRIPPLE®
Gripple Inc
1611 Emily Lane
Aurora, IL 60502
T: +1 866 474 7753
E: grippleinc@gripple.com

Mahmoud Faghihi, PE, SE
California SE No. S5789

PAGE NUMBER: 4.4

DATE 7/11/2025

GRIPPLE LOOSE RETROFIT BRACKET

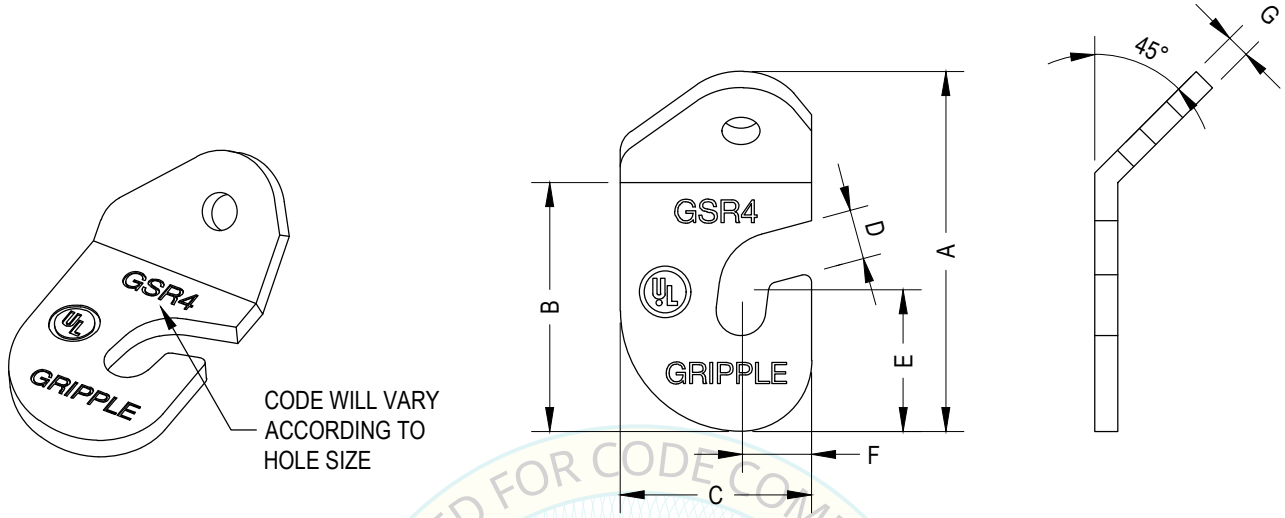

REVIEWED FOR CODE COMPLIANCE
HCAi
OPM-0709
BY: William Staehlin
DATE: 07/19/2025
INTERNATIONAL BUILDING CODE 2022

PART NUMBER	BOLT DIAMETER	DIMENSIONS						
		A	B	C	D	E	F	G
GSR4	3/8"	3 45/64"	2 9/16"	1 31/32"	7/16"	1 17/64"	45/64"	1/4"
GSR5	1/2"	3 3/4"	2 41/64"	1 31/32"	9/16"	1 19/64"	45/64"	1/4"
GSR6	5/8"	3 3/4"	2 41/64"	1 31/32"	11/16"	1 19/64"	45/64"	1/4"
GSR8	3/4"	4 9/64"	3 1/16"	2 1/4"	13/16"	1 3/8"	55/64"	1/4"
GSR10	7/8"	4 9/16"	3 5/16"	2 7/16"	1 1/8"	1 17/32"	29/32"	1/4"

GRIPPLE®
Gripple Inc
1611 Emily Lane
Aurora, IL 60502
T: +1 866 474 7753
E: grippleinc@gripple.com

Mahmoud Faghihi, PE, SE
California SE No. S5789

PAGE NUMBER: 4.5

DATE 7/11/2025

Universal Bracket (for Mechanical & Plumbing)

Gripple's Universal Brackets are designed for quick and easy support of piping, and other mechanical services, and are used in the same manner as strut.

FEATURES / BENEFITS

- **Quick** – pre-cut lengths eliminate the need for cutting channel on-site, allowing more productive use of labor
- **Versatile** – can be bolted directly to soffit or wall, or suspended from the soffit using a Gripple Cable Hanger, or threaded rod
- **Compatible** – uniform slots on three sides allow accurate alignment of Gripple clamps and Quick Twist accessories with the fourth side permitting the use of traditional channel / strut accessories
- **Safe** – improved health and safety as no tools or 'hot works' permit required for installation
- **Flexible** – perfect for pre-fab or multi-service installations

INSTALLATION & ADJUSTMENT

1.

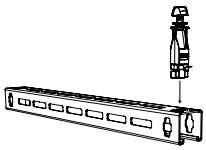

2.

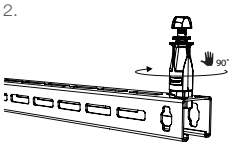

3.

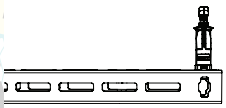

4.

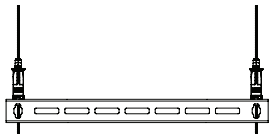

SPECIFICATION

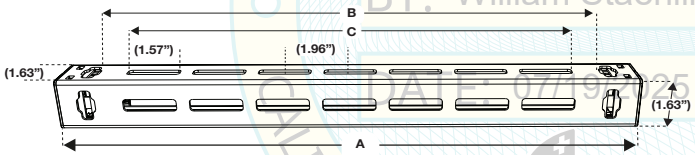

Bracket	UB-9IN	UB-13IN	UB-17IN	UB-21IN	UB-25IN	UB-29IN	UB-33IN
A (in) Length	9.3	13.2	17.1	21.1	25.0	28.9	32.9
B (in) Suspension Space	6.9	10.9	14.8	18.7	22.7	26.6	30.6
C (in) Working Space	5.5	9.4	13.4	17.3	21.3	25.2	29.1
No. of Slots	3	5	7	9	11	13	15
Bracket	**UB-37IN**	**UB-41IN**	**UB-45IN**	**UB-49IN**	**UB-53IN**	**UB-58IN**	**UB-61IN**
A (in) Length	36.8	40.8	44.7	48.6	52.6	56.5	60.4
B (in) Suspension Space	34.5	38.4	42.4	46.3	50.2	54.2	58.1
C (in) Working Space	33.1	37.0	40.9	44.9	48.8	52.8	56.7
No. of Slots	17	19	21	23	25	27	29

RELATED PRODUCTS

UniGrip Central Exit

UniGrip QTUB

Conduit Clamp

Trunking Clamp

Pipe Clamps

QT Accessories

For more information on suspension methods contact us or visit **www.gripple.com**

SUBMITTAL INFORMATION

Load Rating:
Loading at ambient temperatures. See table on reverse page for maximum working loads.

Material:
BS EN 10346:2009 DX51D (Mild Steel, Pre-Galv Z275)

Approvals:
ICC-ESR-4622 approved
IAPMO approved
MFMA compliant
Division of State Architect (DSA) Compliance
Office of Statewide Health Planning & Development (OSHPD)
Compliance Fire tested by Exova to F120 & MPA to 1363-1

PI-BRACKET-UNIVERSAL-MECH-US
Published 04/22

www.gripple.com

Gripple's policy is one of continuous development and innovation.
We therefore reserve the right to alter specifications, etc. without notice.

Gripple Inc | 1611 Emily Lane | Aurora, IL 60502 | USA
Tel +1 866 474 7753 Fax +1 800 654 0689 Email grippleinc@gripple.com

OPM-0709
BY: William Staehlin
DATE: 07/19/2025
CALIFORNIA BUILDING CODE, 2022

Gripple Inc
1611 Emily Lane
Aurora, IL 60502

T: +1 866 474 7753
E: grippleinc@gripple.com

Mahmoud Faghihi, PE, SE
California SE No. S5789

PAGE NUMBER: 4.6

DATE 7/11/2025

Universal Bracket (for Mechanical & Plumbing)

GRIPPLE®

Maximum Working Load (lbs)*

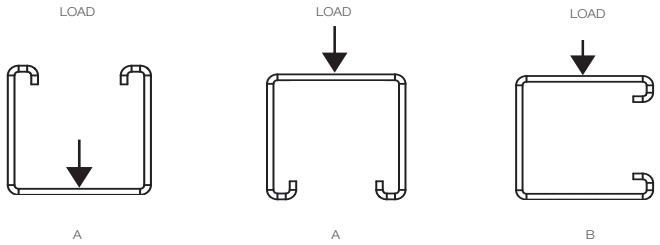

UB Bracket Code	Bracket Length (in.)	L/240 SWL (lbs) *			
		UDL (Orientation A)	Point Load (Orientation A)	UDL (Orientation B)	Point Load (Orientation B)
UB-9IN	9.25	995	830	270	260
UB-13IN	13.19	952	781	261	247
UB-17IN	17.13	909	733	253	235
UB-21IN	21.06	866	684	244	223
UB-25IN	25	824	636	236	210
UB-29IN	28.94	781	587	227	198
UB-33IN	32.87	738	539	219	186
UB-37IN	36.81	696	490	210	173
UB-41IN	40.75	653	442	202	161
UB-45IN	44.69	610	393	193	149
UB-49IN	48.62	568	345	185	136
UB-53IN	52.56	525	296	176	124
UB-58IN	56.5	482	248	168	112
UB-61IN	60.43	440	200	160	100

*For more details on specified loads or additional deflection ratings please contact Gripple Technical Services. When loading multiple faces the total load applied must not exceed the values stated.

PI-BRACKET-UNIVERSAL-MECH-US
Published 04/22

www.gripple.com

Gripple's policy is one of continuous development and innovation.
We therefore reserve the right to alter specifications, etc. without notice.

Gripple Inc | 1611 Emily Lane | Aurora, IL 60502 | USA
Tel +1 866 474 7753 Fax +1 800 654 0689 Email grippleinc@gripple.com

GRIPPLE®
Gripple Inc
1611 Emily Lane
Aurora, IL 60502
T: +1 866 474 7753
E: grippleinc@gripple.com

Mahmoud Faghihi, PE, SE
California SE No. S5789

PAGE NUMBER: 4.7

DATE 7/11/2025

UNISTRUT P1000

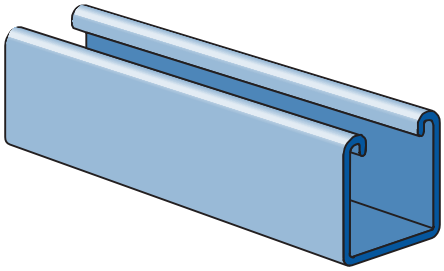

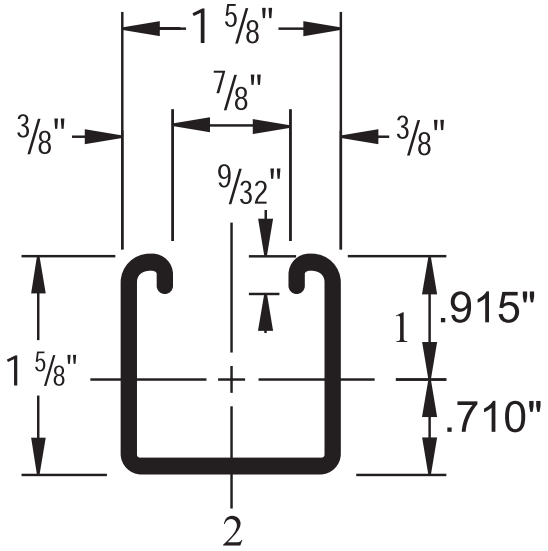

Wt/100 Ft:189 Lbs (281 kg/100 m)
Allowable Moment 5,070 In-Lbs (570 N•m)
12 Gauge Nominal Thickness .105" (2.7mm)

FOR CODE CO

P1000 - Beam Loading

Span In	Max. Allowable Uniform Load Lbs	Defl. at Uniform Load In	Uniform Loading at Deflection Span/180 Lbs	Span/240 Lbs	Span/360 Lbs
24	1,690	0.06	1,690	1,690	1,690
36	1,130	0.13	1,130	1,130	900
48	850	0.22	850	760	500
60	680	0.35	650	480	320
72	560	0.50	450	340	220
84	480	0.68	330	250	160
96	420	0.89	250	190	130
108	380	1.14	200	150	100
120	340	1.40	160	120	80
144	280	2.00	110	80	60
168	240	2.72	80	60	40
192	210	3.55	60	50	NR
216	190	4.58	50	40	NR
240	170	5.62	40	NR	NR

GRIPPLE®
Gripple Inc
1611 Emily Lane
Aurora, IL 60502
T: +1 866 474 7753
E: grippleinc@gripple.com

MFaghihi

Mahmoud Faghihi, PE, SE
California SE No. S5789

PAGE NUMBER: 4.8

DATE 7/11/2025

Section 5 - Design Tables Associated with Section 2

REVIEWED FOR CODE COMPLIANCE
HCAi
OPM-0709
BY: William Staehlin
07/19/2025
CALIFORNIA BUILDING CODE, 2022

Section 5 – Brace Force Demand Tables – Table 1.1 – Steel Pipe Schedule 40 w/ Water & Insulation

Reference Detail p2.1-3

Maximum Brace Angle, θ_{max} = 30 degrees

Table 1.1A – Steel Pipe Schedule 40 w/ Water & Insulation - Brace Force Demand, T_{cable} (lbs)

Pipe ø	Weight	Spacing	z/h	0.25				0.5				0.75				1			
			S_{DS}	0.5	1	1.5	2	0.5	1	1.5	2	0.5	1	1.5	2	0.5	1	1.5	2
(in.)	(plf)	(ft)	F_P	0.23	0.45	0.68	0.90	0.25	0.50	0.75	1.00	0.31	0.63	0.94	1.25	0.38	0.75	1.13	1.50
1.25	3.6	80		75	150	224	299	83	166	249	333	104	208	312	416	125	249	374	499
1.5	4.3	80		89	179	268	357	99	199	298	397	124	248	372	497	149	298	447	596
2	6	80		125	249	374	499	139	277	416	554	173	346	520	693	208	416	624	831
2.5	8.8	80		183	366	549	732	203	406	610	813	254	508	762	1016	305	610	915	1219
3	11.9	80		247	495	742	989	275	550	824	1099	344	687	1031	1374	412	824	1237	1649
3.5	14.6	80		303	607	910	1214	337	674	1012	1349	421	843	1264	1686	506	1012	1517	2023
4	17.6	80		366	732	1097	1463	406	813	1219	1626	508	1016	1524	2032	610	1219	1829	2439
5	24.8	60		387	773	1160	1546	430	859	1289	1718	537	1074	1611	2148	644	1289	1933	2577
6	33.3	60		519	1038	1557	2076	577	1154	1730	2307	721	1442	2163	2884	865	1730	2595	3461
8	52.5	40		546	1091	1637	2182	606	1212	1819	2425	758	1516	2273	3031	909	1819	2728	3637
10	77.4	20		402	804	1207	1609	447	894	1341	1787	559	1117	1676	2234	670	1341	2011	2681
12	101.7	20		528	1057	1585	2114	587	1174	1761	2349	734	1468	2202	2936	881	1761	2642	3523

Key

	LRFD Rated Strength (lbf)	Cable ø
GS10	400	5/64
GS12	945	1/8
GS19	2265	3/16
GS25	3570	1/4
N/A	Exceeds brace kit strength	

Reference Detail p2.1-3

Maximum Brace Angle, θ_{max} = 45 degrees

Table 1.1B – Steel Pipe Schedule 40 w/ Water & Insulation - Brace Force Demand, T_{cable} (lbs)

Pipe ø	Weight	Spacing	z/h	0.25				0.5				0.75				1			
			S_{DS}	0.5	1	1.5	2	0.5	1	1.5	2	0.5	1	1.5	2	0.5	1	1.5	2
(in.)	(plf)	(ft)	F_P	0.23	0.45	0.68	0.90	0.25	0.50	0.75	1.00	0.31	0.63	0.94	1.25	0.38	0.75	1.13	1.50
1.25	3.6	80		92	183	275	367	102	204	305	407	127	255	382	509	153	305	458	611
1.5	4.3	80		109	219	328	438	122	243	365	486	152	304	456	608	182	365	547	730
2	6	80		153	305	458	611	170	339	509	679	212	424	636	849	255	509	764	1018
2.5	8.8	80		224	448	672	896	249	498	747	996	311	622	933	1245	373	747	1120	1493
3	11.9	80		303	606	909	1212	337	673	1010	1346	421	841	1262	1683	505	1010	1515	2019
3.5	14.6	80		372	743	1115	1487	413	826	1239	1652	516	1032	1549	2065	619	1239	1858	2478
4	17.6	80		448	896	1344	1792	498	996	1493	1991	622	1245	1867	2489	747	1493	2240	2987
5	24.8	60		473	947	1420	1894	526	1052	1578	2104	658	1315	1973	2630	789	1578	2367	3157
6	33.3	40		424	848	1272	1695	471	942	1413	1884	589	1177	1766	2355	706	1413	2119	2826
8	52.5	20		334	668	1002	1336	371	742	1114	1485	464	928	1392	1856	557	1114	1671	2227
10	77.4	20		493	985	1478	1970	547	1095	1642	2189	684	1368	2052	2737	821	1642	2463	3284
12	101.7	20		647	1294	1942	2589	719	1438	2157	2877	899	1798	2697	3596	1079	2157	3236	4315

Key

	LRFD Rated Strength (lbf)	Cable ø
GS10	400	5/64
GS12	945	1/8
GS19	2265	3/16
GS25	3570	1/4
N/A	Exceeds brace kit strength	

Reference Detail p2.1-3

Maximum Brace Angle, θ_{max} = 60 degrees

Table 1.1C – Steel Pipe Schedule 40 w/ Water & Insulation - Brace Force Demand, T_{cable} (lbs)

Pipe ø	Weight	Spacing	z/h	0.25				0.5				0.75				1			
			S_{DS}	0.5	1	1.5	2	0.5	1	1.5	2	0.5	1	1.5	2	0.5	1	1.5	2
(in.)	(plf)	(ft)	F_P	0.23	0.45	0.68	0.90	0.25	0.50	0.75	1.00	0.31	0.63	0.94	1.25	0.38	0.75	1.13	1.50
1.25	3.6	80		130	259	389	518	144	288	432	576	180	360	540	720	216	432	648	864
1.5	4.3	80		155	310	464	619	172	344	516	688	215	430	645	860	258	516	774	1032
2	6	80		216	432	648	864	240	480	720	960	300	600	900	1200	360	720	1080	1440
2.5	8.8	80		317	634	950	1267	352	704	1056	1408	440	880	1320	1760	528	1056	1584	2112
3	11.9	80		428	857	1285	1714	476	952	1428	1904	595	1190	1785	2380	714	1428	2142	2856
3.5	14.6	80		526	1051	1577	2102	584	1168	1752	2336	730	1460	2190	2920	876	1752	2628	3504
4	17.6	60		475	950	1426	1901	528	1056	1584	2112	660	1320	1980	2640	792	1584	2376	3168
5	24.8	40		446	893	1339	1786	496	992	1488	1984	620	1240	1860	2480	744	1488	2232	2976
6	33.3	40		599	1199	1798	2398	666	1332	1998	2664	833	1665	2498	3330	999	1998	2997	3996
8	52.5	20		473	945	1418	1890	525	1050	1575	2100	656	1313	1969	2625	788	1575	2363	3150
10	77.4	20		697	1393	2090	2786	774	1548	2322	3096	968	1935	2903	3870	1161	2322	3483	4644
12	101.7	10		458	915	1373	1831	509	1017	1526	2034	636	1271	1907	2543	763	1526	2288	3051

Key

	LRFD Rated Strength (lbf)	Cable ø
GS10	400	5/64
GS12	945	1/8
GS19	2265	3/16
GS25	3570	1/4
N/A	Exceeds brace kit strength	

Assumed constants: a_p = 2.5 R_p = 6 I_p = 1.5

Notes:

1. For spacings other than those listed in the table, multiply T_{cable} table values by actual spacing/spacing in the table. Then use maximum LRFD Rated Strength in Key to determine Gripple fastener.
2. Gripple seismic kit is only approved for angles 30-60 degrees
3. Adequacy of pipe, duct, cable tray, etc to span between bracing shall be determined by the engineer of record.
4. "Spacing" provided does not consider the spacing required for gravity support. The scope of this OPM is limited to seismic bracing only.

Section 5 – Brace Force Demand Tables – Table 1.2 – Cast Iron Pipe w/ Water & Insulation

Reference Detail p2.1-3

Maximum Brace Angle, θ_{max} = 30 degrees

Table 1.2A – Cast Iron Pipe w/ Water & Insulation - Brace Force Demand, T_{cable} (lbs)

Pipe ø (in.)	Weight (plf)	Spacing (ft)	z/h	0.25				0.5				0.75				1			
			S_{DS}	0.5	1	1.5	2	0.5	1	1.5	2	0.5	1	1.5	2	0.5	1	1.5	2
			F_P	0.23	0.45	0.68	0.90	0.25	0.50	0.75	1.00	0.31	0.63	0.94	1.25	0.38	0.75	1.13	1.50
3	8.4	40		87	175	262	349	97	194	291	388	121	242	364	485	145	291	436	582
4	13	14		47	95	142	189	53	105	158	210	66	131	197	263	79	158	236	315
5	18	16		75	150	224	299	83	166	249	333	104	208	312	416	125	249	374	499
6	23.4	17		103	207	310	413	115	230	345	459	144	287	431	574	172	345	517	689
8	40.2	19		198	397	595	794	220	441	661	882	276	551	827	1102	331	661	992	1323
10	60.8	22		348	695	1043	1390	386	772	1158	1545	483	965	1448	1931	579	1158	1738	2317
12	82.1	23		491	981	1472	1962	545	1090	1635	2180	681	1363	2044	2726	818	1635	2453	3271

Key

	LRFD Rated Strength (lbf)	Cable ø
GS10	400	5/64
GS12	945	1/8
GS19	2265	3/16
GS25	3570	1/4
N/A	Exceeds brace kit strength	

Reference Detail p2.1-3

Maximum Brace Angle, θ_{max} = 45 degrees

Table 1.2B – Cast Iron Pipe w/ Water & Insulation - Brace Force Demand, T_{cable} (lbs)

Pipe ø (in.)	Weight (plf)	Spacing (ft)	z/h	0.25				0.5				0.75				1			
			S_{DS}	0.5	1	1.5	2	0.5	1	1.5	2	0.5	1	1.5	2	0.5	1	1.5	2
			F_P	0.23	0.45	0.68	0.90	0.25	0.50	0.75	1.00	0.31	0.63	0.94	1.25	0.38	0.75	1.13	1.50
3	8.4	12		32	64	96	128	36	71	107	143	45	89	134	178	53	107	160	214
4	13	14		58	116	174	232	64	129	193	257	80	161	241	322	97	193	290	386
5	18	16		92	183	275	367	102	204	305	407	127	255	382	509	153	305	458	611
6	23.4	17		127	253	380	506	141	281	422	563	176	352	527	703	211	422	633	844
8	40.2	19		243	486	729	972	270	540	810	1080	338	675	1013	1350	405	810	1215	1620
10	60.8	22		426	851	1277	1702	473	946	1419	1892	591	1182	1773	2365	709	1419	2128	2837
12	82.1	23		601	1202	1803	2403	668	1335	2003	2670	835	1669	2504	3338	1001	2003	3004	4006

Key

	LRFD Rated Strength (lbf)	Cable ø
GS10	400	5/64
GS12	945	1/8
GS19	2265	3/16
GS25	3570	1/4
N/A	Exceeds brace kit strength	

Reference Detail p2.1-3

Maximum Brace Angle, θ_{max} = 60 degrees

Table 1.2C – Cast Iron Pipe w/ Water & Insulation - Brace Force Demand, T_{cable} (lbs)

Pipe ø (in.)	Weight (plf)	Spacing (ft)	z/h	0.25				0.5				0.75				1			
			S_{DS}	0.5	1	1.5	2	0.5	1	1.5	2	0.5	1	1.5	2	0.5	1	1.5	2
			F_P	0.23	0.45	0.68	0.90	0.25	0.50	0.75	1.00	0.31	0.63	0.94	1.25	0.38	0.75	1.13	1.50
3	8.4	12		45	91	136	181	50	101	151	202	63	126	189	252	76	151	227	302
4	13	14		82	164	246	328	91	182	273	364	114	228	341	455	137	273	410	546
5	18	16		130	259	389	518	144	288	432	576	180	360	540	720	216	432	648	864
6	23.4	17		179	358	537	716	199	398	597	796	249	497	746	995	298	597	895	1193
8	40.2	19		344	687	1031	1375	382	764	1146	1528	477	955	1432	1910	573	1146	1719	2291
10	60.8	22		602	1204	1806	2408	669	1338	2006	2675	836	1672	2508	3344	1003	2006	3010	4013
12	82.1	23		850	1699	2549	3399	944	1888	2832	3777	1180	2360	3541	4721	1416	2832	4249	5665

Key

	LRFD Rated Strength (lbf)	Cable ø
GS10	400	5/64
GS12	945	1/8
GS19	2265	3/16
GS25	3570	1/4
N/A	Exceeds brace kit strength	

Assumed constants: a_p = 2.5 6 I_p = 1.5

Notes:

1. For spacings other than those listed in the table, multiply T_{cable} table values by actual spacing/spacing in the table. Then use maximum LRFD Rated Strength in Key to determine Gripple fastener.
2. Gripple seismic kit is only approved for angles 30-60 degrees
3. Adequacy of pipe, duct, cable tray, etc to span between bracing shall be determined by the engineer of record.
4. "Spacing" provided does not consider the spacing required for gravity support. The scope of this OPM is limited to seismic bracing only.

Section 5 – Brace Force Demand Tables – Table 1.3 – PVC Pipe w/ Water & Insulation

Reference Detail p2.1-3

Maximum Brace Angle, θ_{max} = 30 degrees

Table 1.3A – PVC Pipe w/ Water & Insulation - Brace Force Demand, T_{cable} (lbs)

Pipe ø (in.)	Weight (plf)	Spacing (ft)	z/h = 0.25, S_{DS} = 0.5	0.25, 1	0.25, 1.5	0.25, 2	0.5, 0.5	0.5, 1	0.5, 1.5	0.5, 2	0.75, 0.5	0.75, 1	0.75, 1.5	0.75, 2	1, 0.5	1, 1	1, 1.5	1, 2
			F_P = 0.23	0.45	0.68	0.90	0.25	0.50	0.75	1.00	0.31	0.63	0.94	1.25	0.38	0.75	1.13	1.50
1.25	1.1	7	2	4	6	8	2	5	7	9	3	6	9	11	3	7	10	14
1.5	1.5	9	3	7	10	14	4	8	11	15	5	9	14	19	6	11	17	23
2	2.1	10	6	11	17	22	6	12	18	25	8	15	23	31	9	18	28	37
2.5	3.3	11	9	19	28	37	10	21	31	42	13	26	39	52	16	31	47	62
3	4.8	12	15	30	45	59	17	33	50	66	21	41	62	83	25	50	74	99
3.5	7.8	13	26	52	79	105	29	58	87	116	36	73	109	145	44	87	131	175
4	11.7	14	43	85	128	171	47	95	142	189	59	118	178	237	71	142	213	284
5	16.5	16	68	137	205	274	76	152	228	304	95	190	285	380	114	228	342	456
6	27.5	17	122	243	365	486	135	270	405	540	169	338	506	675	203	405	608	810
8	42.5	19	210	420	630	839	233	466	699	933	291	583	874	1166	350	699	1049	1399
10	59.7	22	341	682	1023	1364	379	758	1137	1516	474	947	1421	1895	568	1137	1705	2274
12	71.8	23	429	858	1286	1715	476	953	1429	1906	596	1191	1787	2382	715	1429	2144	2859

Key

	LRFD Rated Strength (lbf)	Cable ø
GS10	400	5/64
GS12	945	1/8
GS19	2265	3/16
GS25	3570	1/4
N/A	Exceeds brace kit strength	

Reference Detail p2.1-3

Maximum Brace Angle, θ_{max} = 45 degrees

Table 1.3B – PVC Pipe w/ Water & Insulation - Brace Force Demand, T_{cable} (lbs)

Pipe ø (in.)	Weight (plf)	Spacing (ft)	z/h = 0.25, S_{DS} = 0.5	0.25, 1	0.25, 1.5	0.25, 2	0.5, 0.5	0.5, 1	0.5, 1.5	0.5, 2	0.75, 0.5	0.75, 1	0.75, 1.5	0.75, 2	1, 0.5	1, 1	1, 1.5	1, 2
			F_P = 0.23	0.45	0.68	0.90	0.25	0.50	0.75	1.00	0.31	0.63	0.94	1.25	0.38	0.75	1.13	1.50
1.25	1.1	7	2	5	7	10	3	6	8	11	3	7	10	14	4	8	12	17
1.5	1.5	9	4	8	12	17	5	9	14	18	6	12	17	23	7	14	21	28
2	2.1	10	7	14	20	27	8	15	23	30	9	19	28	38	11	23	34	45
2.5	3.3	11	11	23	34	46	13	25	38	51	16	32	48	64	19	38	57	76
3	4.8	12	18	36	55	73	20	40	61	81	25	51	76	101	30	61	91	121
3.5	7.8	13	32	64	96	128	36	71	107	142	45	89	134	178	53	107	160	214
4	11.7	14	52	104	157	209	58	116	174	232	73	145	218	290	87	174	261	348
5	16.5	16	84	168	251	335	93	186	279	372	116	233	349	466	140	279	419	559
6	27.5	17	149	298	447	595	165	331	496	662	207	414	620	827	248	496	744	992
8	42.5	19	257	514	771	1028	286	571	857	1142	357	714	1071	1428	428	857	1285	1713
10	59.7	22	418	835	1253	1671	464	928	1392	1856	580	1160	1740	2321	696	1392	2089	2785
12	71.8	23	525	1050	1576	2101	584	1167	1751	2334	729	1459	2188	2918	875	1751	2626	3501

Key

	LRFD Rated Strength (lbf)	Cable ø
GS10	400	5/64
GS12	945	1/8
GS19	2265	3/16
GS25	3570	1/4
N/A	Exceeds brace kit strength	

Reference Detail p2.1-3

Maximum Brace Angle, θ_{max} = 60 degrees

Table 1.3C – PVC Pipe w/ Water & Insulation - Brace Force Demand, T_{cable} (lbs)

Pipe ø (in.)	Weight (plf)	Spacing (ft)	z/h = 0.25, S_{DS} = 0.5	0.25, 1	0.25, 1.5	0.25, 2	0.5, 0.5	0.5, 1	0.5, 1.5	0.5, 2	0.75, 0.5	0.75, 1	0.75, 1.5	0.75, 2	1, 0.5	1, 1	1, 1.5	1, 2
			F_P = 0.23	0.45	0.68	0.90	0.25	0.50	0.75	1.00	0.31	0.63	0.94	1.25	0.38	0.75	1.13	1.50
1.25	1.1	7	4	7	11	14	4	8	12	16	5	10	15	20	6	12	18	24
1.5	1.5	9	6	12	18	23	7	13	20	26	8	16	24	33	10	20	29	39
2	2.1	10	10	19	29	38	11	21	32	43	13	27	40	53	16	32	48	64
2.5	3.3	11	16	32	49	65	18	36	54	72	22	45	67	90	27	54	81	108
3	4.8	12	26	52	77	103	29	57	86	114	36	72	107	143	43	86	129	172
3.5	7.8	13	45	91	136	181	50	101	151	202	63	126	189	252	76	151	227	302
4	11.7	14	74	148	222	295	82	164	246	328	103	205	308	410	123	246	369	492
5	16.5	16	119	237	356	474	132	263	395	527	165	329	494	658	198	395	593	790
6	27.5	17	211	421	632	842	234	468	702	936	292	585	877	1170	351	702	1053	1404
8	42.5	19	363	727	1090	1454	404	808	1212	1615	505	1010	1514	2019	606	1212	1817	2423
10	59.7	22	591	1181	1772	2363	656	1313	1969	2625	820	1641	2461	3282	985	1969	2954	3938
12	71.8	23	743	1485	2228	2971	825	1650	2476	3301	1032	2063	3095	4126	1238	2476	3714	4951

Key

	LRFD Rated Strength (lbf)	Cable ø
GS10	400	5/64
GS12	945	1/8
GS19	2265	3/16
GS25	3570	1/4
N/A	Exceeds brace kit strength	

Assumed constants: a_p = 2.5 R_p = 6 I_p = 1.5

Notes:

1. For spacings other than those listed in the table, multiply T_{cable} table values by actual spacing/spacing in the table. Then use maximum LRFD Rated Strength in Key to determine Gripple fastener.
2. Gripple seismic kit is only approved for angles 30-60 degrees
3. Adequacy of pipe, duct, cable tray, etc to span between bracing shall be determined by the engineer of record.
4. "Spacing" provided does not consider the spacing required for gravity support. The scope of this OPM is limited to seismic bracing only.

Section 5 – Brace Force Demand Tables – Table 1.4 – Copper Pipe type K with Gas

Reference Detail p2.1-3

Maximum Brace Angle, θ_{max} = 30 degrees

Table 1.4A – Copper Pipe type K only Gas - Brace Force Demand, T_{cable} (lbs)

Pipe ø (in.)	Weight (plf)	Spacing (ft)	z/h = 0.25, S_{DS} = 0.5	0.25, 1	0.25, 1.5	0.25, 2	0.5, 0.5	0.5, 1	0.5, 1.5	0.5, 2	0.75, 0.5	0.75, 1	0.75, 1.5	0.75, 2	1, 0.5	1, 1	1, 1.5	1, 2
			F_p = 0.23	0.45	0.68	0.90	0.25	0.50	0.75	1.00	0.31	0.63	0.94	1.25	0.38	0.75	1.13	1.50
1.25	1.04	80	22	43	65	86	24	48	72	96	30	60	90	120	36	72	108	144
1.5	1.36	80	28	57	85	113	31	63	94	126	39	79	118	157	47	94	141	188
2	2.06	80	43	86	128	171	48	95	143	190	59	119	178	238	71	143	214	285
2.5	2.93	80	61	122	183	244	68	135	203	271	85	169	254	338	101	203	304	406
3	4	80	83	166	249	333	92	185	277	370	115	231	346	462	139	277	416	554
3.5	5.3	80	110	220	330	441	122	245	367	490	153	306	459	612	184	367	551	734
4	6.51	80	135	271	406	541	150	301	451	601	188	376	564	752	226	451	677	902
5	9.67	60	151	301	452	603	167	335	502	670	209	419	628	837	251	502	754	1005
6	13.9	60	217	433	650	867	241	482	722	963	301	602	903	1204	361	722	1083	1445
8	25.9	40	269	538	807	1077	299	598	897	1196	374	748	1122	1495	449	897	1346	1794
10	40.3	20	209	419	628	838	233	465	698	931	291	582	873	1163	349	698	1047	1396
12	57.8	20	300	601	901	1201	334	667	1001	1335	417	834	1251	1669	501	1001	1502	2002

Key

	LRFD Rated Strength (lbf)	Cable ø
GS10	400	5/64
GS12	945	1/8
GS19	2265	3/16
GS25	3570	1/4
N/A	Exceeds brace kit strength	

Reference Detail p2.1-3

Maximum Brace Angle, θ_{max} = 45 degrees

Table 1.4B – Copper Pipe type K only Gas - Brace Force Demand, T_{cable} (lbs)

Pipe ø (in.)	Weight (plf)	Spacing (ft)	z/h = 0.25, S_{DS} = 0.5	0.25, 1	0.25, 1.5	0.25, 2	0.5, 0.5	0.5, 1	0.5, 1.5	0.5, 2	0.75, 0.5	0.75, 1	0.75, 1.5	0.75, 2	1, 0.5	1, 1	1, 1.5	1, 2
			F_p = 0.23	0.45	0.68	0.90	0.25	0.50	0.75	1.00	0.31	0.63	0.94	1.25	0.38	0.75	1.13	1.50
1.25	1.04	80	26	53	79	106	29	59	88	118	37	74	110	147	44	88	132	176
1.5	1.36	80	35	69	104	138	38	77	115	154	48	96	144	192	58	115	173	231
2	2.06	80	52	105	157	210	58	117	175	233	73	146	218	291	87	175	262	350
2.5	2.93	80	75	149	224	298	83	166	249	331	104	207	311	414	124	249	373	497
3	4	80	102	204	305	407	113	226	339	453	141	283	424	566	170	339	509	679
3.5	5.3	80	135	270	405	540	150	300	450	600	187	375	562	750	225	450	675	899
4	6.51	80	166	331	497	663	184	368	552	737	230	460	690	921	276	552	829	1105
5	9.67	60	185	369	554	738	205	410	615	821	256	513	769	1026	308	615	923	1231
6	13.9	60	265	531	796	1062	295	590	885	1179	369	737	1106	1474	442	885	1327	1769
8	25.9	40	330	659	989	1319	366	733	1099	1465	458	916	1374	1831	549	1099	1648	2198
10	40.3	20	256	513	769	1026	285	570	855	1140	356	712	1069	1425	427	855	1282	1710
12	57.8	20	368	736	1104	1471	409	817	1226	1635	511	1022	1533	2044	613	1226	1839	2452

Key

	LRFD Rated Strength (lbf)	Cable ø
GS10	400	5/64
GS12	945	1/8
GS19	2265	3/16
GS25	3570	1/4
N/A	Exceeds brace kit strength	

Reference Detail p2.1-3

Maximum Brace Angle, θ_{max} = 60 degrees

Table 1.4C – Copper Pipe type K only Gas - Brace Force Demand, T_{cable} (lbs)

Pipe ø (in.)	Weight (plf)	Spacing (ft)	z/h = 0.25, S_{DS} = 0.5	0.25, 1	0.25, 1.5	0.25, 2	0.5, 0.5	0.5, 1	0.5, 1.5	0.5, 2	0.75, 0.5	0.75, 1	0.75, 1.5	0.75, 2	1, 0.5	1, 1	1, 1.5	1, 2
			F_p = 0.23	0.45	0.68	0.90	0.25	0.50	0.75	1.00	0.31	0.63	0.94	1.25	0.38	0.75	1.13	1.50
1.25	1.04	80	37	75	112	150	42	83	125	166	52	104	156	208	62	125	187	250
1.5	1.36	80	49	98	147	196	54	109	163	218	68	136	204	272	82	163	245	326
2	2.06	80	74	148	222	297	82	165	247	330	103	206	309	412	124	247	371	494
2.5	2.93	80	105	211	316	422	117	234	352	469	147	293	440	586	176	352	527	703
3	4	80	144	288	432	576	160	320	480	640	200	400	600	800	240	480	720	960
3.5	5.3	80	191	382	572	763	212	424	636	848	265	530	795	1060	318	636	954	1272
4	6.51	80	234	469	703	937	260	521	781	1042	326	651	977	1302	391	781	1172	1562
5	9.67	60	261	522	783	1044	290	580	870	1160	363	725	1088	1451	435	870	1305	1741
6	13.9	60	375	751	1126	1501	417	834	1251	1668	521	1043	1564	2085	626	1251	1877	2502
8	25.9	40	466	932	1399	1865	518	1036	1554	2072	648	1295	1943	2590	777	1554	2331	3108
10	40.3	20	363	725	1088	1451	403	806	1209	1612	504	1008	1511	2015	605	1209	1814	2418
12	57.8	20	520	1040	1561	2081	578	1156	1734	2312	723	1445	2168	2890	867	1734	2601	3468

Key

	LRFD Rated Strength (lbf)	Cable ø
GS10	400	5/64
GS12	945	1/8
GS19	2265	3/16
GS25	3570	1/4
N/A	Exceeds brace kit strength	

Assumed constants: a_p = 2.5 R_p = 6 I_p = 1.5

Notes:

1. For spacings other than those listed in the table, multiply T_{cable} table values by actual spacing/spacing in the table. Then use maximum LRFD Rated Strength in Key to determine Gripple fastener.
2. Gripple seismic kit is only approved for angles 30-60 degrees
3. Adequacy of pipe, duct, cable tray, etc to span between bracing shall be determined by the engineer of record.
4. "Spacing" provided does not consider the spacing required for gravity support. The scope of this OPM is limited to seismic bracing only.

Section 5 – Brace Force Demand Tables – Table 1.5 – Copper Pipe type K w/ Water & Insulation

Reference Detail p2.1-3

Maximum Brace Angle, θ_{max} = 30 degrees

Table 1.5A – Copper Pipe type K w/ Water & Insulation - Brace Force Demand, T_{cable} (lbs)

Pipe ø (in.)	Weight (plf)	Spacing (ft)	z/h = 0.25, S_{DS} = 0.5	0.25, 1	0.25, 1.5	0.25, 2	0.5, 0.5	0.5, 1	0.5, 1.5	0.5, 2	0.75, 0.5	0.75, 1	0.75, 1.5	0.75, 2	1, 0.5	1, 1	1, 1.5	1, 2
			F_p = 0.23	0.45	0.68	0.90	0.25	0.50	0.75	1.00	0.31	0.63	0.94	1.25	0.38	0.75	1.13	1.50
1.25	2.3	80	48	96	143	191	53	106	159	212	66	133	199	266	80	159	239	319
1.5	2.8	80	58	116	175	233	65	129	194	259	81	162	242	323	97	194	291	388
2	4.2	80	87	175	262	349	97	194	291	388	121	242	364	485	145	291	436	582
2.5	5.8	80	121	241	362	482	134	268	402	536	167	335	502	670	201	402	603	804
3	7.6	80	158	316	474	632	176	351	527	702	219	439	658	878	263	527	790	1053
3.5	10	80	208	416	624	831	231	462	693	924	289	577	866	1155	346	693	1039	1386
4	12.4	60	193	387	580	773	215	430	644	859	268	537	805	1074	322	644	966	1289
5	18.6	60	290	580	870	1160	322	644	966	1289	403	805	1208	1611	483	966	1450	1933
6	25.1	40	261	522	783	1043	290	580	869	1159	362	725	1087	1449	435	869	1304	1739
8	43.7	20	227	454	681	908	252	505	757	1009	315	631	946	1262	378	757	1135	1514
10	66.9	20	348	695	1043	1390	386	772	1159	1545	483	966	1448	1931	579	1159	1738	2317
12	91.8	20	477	954	1431	1908	530	1060	1590	2120	663	1325	1988	2650	795	1590	2385	3180

Key	LRFD Rated Strength (lbf)	Cable ø
GS10	400	5/64
GS12	945	1/8
GS19	2265	3/16
GS25	3570	1/4
N/A	Exceeds brace kit strength	

Reference Detail p2.1-3

Maximum Brace Angle, θ_{max} = 45 degrees

Table 1.5B – Copper Pipe type K w/ Water & Insulation - Brace Force Demand, T_{cable} (lbs)

Pipe ø (in.)	Weight (plf)	Spacing (ft)	z/h = 0.25, S_{DS} = 0.5	0.25, 1	0.25, 1.5	0.25, 2	0.5, 0.5	0.5, 1	0.5, 1.5	0.5, 2	0.75, 0.5	0.75, 1	0.75, 1.5	0.75, 2	1, 0.5	1, 1	1, 1.5	1, 2
			F_p = 0.23	0.45	0.68	0.90	0.25	0.50	0.75	1.00	0.31	0.63	0.94	1.25	0.38	0.75	1.13	1.50
1.25	2.3	80	59	117	176	234	65	130	195	260	81	163	244	325	98	195	293	390
1.5	2.8	80	71	143	214	285	79	158	238	317	99	198	297	396	119	238	356	475
2	4.2	80	107	214	321	428	119	238	356	475	148	297	445	594	178	356	535	713
2.5	5.8	80	148	295	443	591	164	328	492	656	205	410	615	820	246	492	738	984
3	7.6	80	193	387	580	774	215	430	645	860	269	537	806	1075	322	645	967	1290
3.5	10	80	255	509	764	1018	283	566	849	1131	354	707	1061	1414	424	849	1273	1697
4	12.4	60	237	473	710	947	263	526	789	1052	329	658	986	1315	395	789	1184	1578
5	18.6	40	237	473	710	947	263	526	789	1052	329	658	986	1315	395	789	1184	1578
6	25.1	20	160	319	479	639	177	355	532	710	222	444	666	887	266	532	799	1065
8	43.7	20	278	556	834	1112	309	618	927	1236	386	773	1159	1545	464	927	1391	1854
10	66.9	10	213	426	639	851	237	473	710	946	296	591	887	1183	355	710	1064	1419
12	91.8	10	292	584	876	1168	325	649	974	1298	406	811	1217	1623	487	974	1461	1947

Key	LRFD Rated Strength (lbf)	Cable ø
GS10	400	5/64
GS12	945	1/8
GS19	2265	3/16
GS25	3570	1/4
N/A	Exceeds brace kit strength	

Reference Detail p2.1-3

Maximum Brace Angle, θ_{max} = 60 degrees

Table 1.5C – Copper Pipe type K w/ Water & Insulation - Brace Force Demand, T_{cable} (lbs)

Pipe ø (in.)	Weight (plf)	Spacing (ft)	z/h = 0.25, S_{DS} = 0.5	0.25, 1	0.25, 1.5	0.25, 2	0.5, 0.5	0.5, 1	0.5, 1.5	0.5, 2	0.75, 0.5	0.75, 1	0.75, 1.5	0.75, 2	1, 0.5	1, 1	1, 1.5	1, 2
			F_p = 0.23	0.45	0.68	0.90	0.25	0.50	0.75	1.00	0.31	0.63	0.94	1.25	0.38	0.75	1.13	1.50
1.25	2.3	80	83	166	248	331	92	184	276	368	115	230	345	460	138	276	414	552
1.5	2.8	80	101	202	302	403	112	224	336	448	140	280	420	560	168	336	504	672
2	4.2	80	151	302	454	605	168	336	504	672	210	420	630	840	252	504	756	1008
2.5	5.8	80	209	418	626	835	232	464	696	928	290	580	870	1160	348	696	1044	1392
3	7.6	80	274	547	821	1094	304	608	912	1216	380	760	1140	1520	456	912	1368	1824
3.5	10	60	270	540	810	1080	300	600	900	1200	375	750	1125	1500	450	900	1350	1800
4	12.4	60	335	670	1004	1339	372	744	1116	1488	465	930	1395	1860	558	1116	1674	2232
5	18.6	40	335	670	1004	1339	372	744	1116	1488	465	930	1395	1860	558	1116	1674	2232
6	25.1	20	226	452	678	904	251	502	753	1004	314	628	941	1255	377	753	1130	1506
8	43.7	10	197	393	590	787	219	437	656	874	273	546	819	1093	328	656	983	1311
10	66.9	10	301	602	903	1204	335	669	1004	1338	418	836	1254	1673	502	1004	1505	2007
12	91.8	10	413	826	1239	1652	459	918	1377	1836	574	1148	1721	2295	689	1377	2066	2754

Key	LRFD Rated Strength (lbf)	Cable ø
GS10	400	5/64
GS12	945	1/8
GS19	2265	3/16
GS25	3570	1/4
N/A	Exceeds brace kit strength	

Assumed constants: a_p = 2.5 R_p = 6 I_p = 1.5

Notes:

1. For spacings other than those listed in the table, multiply T_{cable} table values by actual spacing/spacing in the table. Then use maximum LRFD Rated Strength in Key to determine Gripple fastener.
2. Gripple seismic kit is only approved for angles 30-60 degrees
3. Adequacy of pipe, duct, cable tray, etc to span between bracing shall be determined by the engineer of record.
4. "Spacing" provided does not consider the spacing required for gravity support. The scope of this OPM is limited to seismic bracing only.

Section 5 – Brace Force Demand Tables – Table 1.6 – Round, Oval, or Rectangular Duct

Reference Detail p2.4-12

Maximum Brace Angle, θ_{max} = 30 degrees

Table 1.6A – Round, Oval, or Rectangular Duct - Brace Force Demand, T_{cable} (lbs)

Weight (plf)	Longitudinal Spacing (ft)	Transverse Spacing (ft)	z/h 0.25				0.5				0.75				1			
			S_{DS} 0.5	1	1.5	2	0.5	1	1.5	2	0.5	1	1.5	2	0.5	1	1.5	2
			F_P 0.23	0.45	0.68	0.90	0.25	0.50	0.75	1.00	0.31	0.63	0.94	1.25	0.38	0.75	1.13	1.50
10	40	20	52	104	156	208	58	115	173	231	72	144	217	289	87	173	260	346
20	40	20	104	208	312	416	115	231	346	462	144	289	433	577	173	346	520	693
30	40	20	156	312	468	624	173	346	520	693	217	433	650	866	260	520	779	1039
40	40	20	208	416	624	831	231	462	693	924	289	577	866	1155	346	693	1039	1386
50	40	20	260	520	779	1039	289	577	866	1155	361	722	1083	1443	433	866	1299	1732
60	20	10	156	312	468	624	173	346	520	693	217	433	650	866	260	520	779	1039
70	20	10	182	364	546	727	202	404	606	808	253	505	758	1010	303	606	909	1212
80	20	10	208	416	624	831	231	462	693	924	289	577	866	1155	346	693	1039	1386
90	20	10	234	468	701	935	260	520	779	1039	325	650	974	1299	390	779	1169	1559
100	20	10	260	520	779	1039	289	577	866	1155	361	722	1083	1443	433	866	1299	1732

Key		
	LRFD Rated Strength (lbf)	Cable ø
GS10	400	5/64
GS12	945	1/8
GS19	2265	3/16
GS25	3570	1/4
N/A	Exceeds brace kit strength	

Reference Detail p2.4-12

Maximum Brace Angle, θmax = 45 degrees

Table 1.6B – Round, Oval, or Rectangular Duct - Brace Force Demand, T_{cable} (lbs)

Weight (plf)	Longitudinal Spacing (ft)	Transverse Spacing (ft)	z/h 0.25				0.5				0.75				1			
			S_{DS} 0.5	1	1.5	2	0.5	1	1.5	2	0.5	1	1.5	2	0.5	1	1.5	2
			F_P 0.23	0.45	0.68	0.90	0.25	0.50	0.75	1.00	0.31	0.63	0.94	1.25	0.38	0.75	1.13	1.50
10	40	20	64	127	191	255	71	141	212	283	88	177	265	354	106	212	318	424
20	40	20	127	255	382	509	141	283	424	566	177	354	530	707	212	424	636	849
30	40	20	191	382	573	764	212	424	636	849	265	530	795	1061	318	636	955	1273
40	40	20	255	509	764	1018	283	566	849	1131	354	707	1061	1414	424	849	1273	1697
50	40	20	318	636	955	1273	354	707	1061	1414	442	884	1326	1768	530	1061	1591	2121
60	20	10	191	382	573	764	212	424	636	849	265	530	795	1061	318	636	955	1273
70	20	10	223	445	668	891	247	495	742	990	309	619	928	1237	371	742	1114	1485
80	20	10	255	509	764	1018	283	566	849	1131	354	707	1061	1414	424	849	1273	1697
90	20	10	286	573	859	1146	318	636	955	1273	398	795	1193	1591	477	955	1432	1909
100	20	10	318	636	955	1273	354	707	1061	1414	442	884	1326	1768	530	1061	1591	2121

Key		
	LRFD Rated Strength (lbf)	Cable ø
GS10	400	5/64
GS12	945	1/8
GS19	2265	3/16
GS25	3570	1/4
N/A	Exceeds brace kit strength	

Reference Detail p2.4-12

Maximum Brace Angle, θmax = 60 degrees

Table 1.6C – Round, Oval, or Rectangular Duct - Brace Force Demand, T_{cable} (lbs)

Weight (plf)	Longitudinal Spacing (ft)	Transverse Spacing (ft)	z/h 0.25				0.5				0.75				1			
			S_{DS} 0.5	1	1.5	2	0.5	1	1.5	2	0.5	1	1.5	2	0.5	1	1.5	2
			F_P 0.23	0.45	0.68	0.90	0.25	0.50	0.75	1.00	0.31	0.63	0.94	1.25	0.38	0.75	1.13	1.50
10	40	20	90	180	270	360	100	200	300	400	125	250	375	500	150	300	450	600
20	40	20	180	360	540	720	200	400	600	800	250	500	750	1000	300	600	900	1200
30	40	20	270	540	810	1080	300	600	900	1200	375	750	1125	1500	450	900	1350	1800
40	40	20	360	720	1080	1440	400	800	1200	1600	500	1000	1500	2000	600	1200	1800	2400
50	40	20	450	900	1350	1800	500	1000	1500	2000	625	1250	1875	2500	750	1500	2250	3000
60	20	10	270	540	810	1080	300	600	900	1200	375	750	1125	1500	450	900	1350	1800
70	20	10	315	630	945	1260	350	700	1050	1400	438	875	1313	1750	525	1050	1575	2100
80	20	10	360	720	1080	1440	400	800	1200	1600	500	1000	1500	2000	600	1200	1800	2400
90	20	10	405	810	1215	1620	450	900	1350	1800	563	1125	1688	2250	675	1350	2025	2700
100	20	10	450	900	1350	1800	500	1000	1500	2000	625	1250	1875	2500	750	1500	2250	3000

Key		
	LRFD Rated Strength (lbf)	Cable ø
GS10	400	5/64
GS12	945	1/8
GS19	2265	3/16
GS25	3570	1/4
N/A	Exceeds brace kit strength	

Assumed constants: a_p = 2.5 R_p = 6 I_p = 1.5

Notes:

1. For spacings other than those listed in the table, multiply T_{cable} table values by actual spacing/spacing in the table. Then use maximum LRFD Rated Strength in Key to determine Gripple fastener.
2. Gripple seismic kit is only approved for angles 30-60 degrees
3. Adequacy of pipe, duct, cable tray, etc to span between bracing shall be determined by the engineer of record.
4. "Spacing" provided does not consider the spacing required for gravity support. The scope of this OPM is limited to seismic bracing only.

Section 5 – Brace Force Demand Tables – Table 1.7 – Trapeze or Cable Tray

Reference Detail p2.13-15, 2.17-21

Maximum Brace Angle, θ_{max} = 30 degrees

Table 1.7A – Trapeze or Cable Tray - Brace Force Demand, T_{cable} (lbs)

Weight (plf)	Longitudinal Spacing (ft)	Transverse Spacing (ft)	z/h 0.25				0.5				0.75				1			
			S_{DS} 0.5	1	1.5	2	0.5	1	1.5	2	0.5	1	1.5	2	0.5	1	1.5	2
			F_P 0.23	0.45	0.68	0.90	0.25	0.50	0.75	1.00	0.31	0.63	0.94	1.25	0.38	0.75	1.13	1.50
10	40	20	52	104	156	208	58	115	173	231	72	144	217	289	87	173	260	346
20	40	20	104	208	312	416	115	231	346	462	144	289	433	577	173	346	520	693
30	40	20	156	312	468	624	173	346	520	693	217	433	650	866	260	520	779	1039
40	40	20	208	416	624	831	231	462	693	924	289	577	866	1155	346	693	1039	1386
45	40	20	234	468	701	935	260	520	779	1039	325	650	974	1299	390	779	1169	1559
50	20	10	130	260	390	520	144	289	433	577	180	361	541	722	217	433	650	866
60	20	10	156	312	468	624	173	346	520	693	217	433	650	866	260	520	779	1039
70	20	10	182	364	546	727	202	404	606	808	253	505	758	1010	303	606	909	1212
80	20	10	208	416	624	831	231	462	693	924	289	577	866	1155	346	693	1039	1386
85	20	10	221	442	663	883	245	491	736	981	307	613	920	1227	368	736	1104	1472

Key		
	LRFD Rated Strength (lbf)	Cable ø
GS10	400	5/64
GS12	945	1/8
GS19	2265	3/16
GS25	3570	1/4
N/A	Exceeds brace kit strength	

Reference Detail p2.13-15, 2.17-21

Maximum Brace Angle, θ_{max} = 45 degrees

Table 1.7B – Trapeze or Cable Tray - Brace Force Demand, T_{cable} (lbs)

Weight (plf)	Longitudinal Spacing (ft)	Transverse Spacing (ft)	z/h 0.25				0.5				0.75				1			
			S_{DS} 0.5	1	1.5	2	0.5	1	1.5	2	0.5	1	1.5	2	0.5	1	1.5	2
			F_P 0.23	0.45	0.68	0.90	0.25	0.50	0.75	1.00	0.31	0.63	0.94	1.25	0.38	0.75	1.13	1.50
10	40	20	64	127	191	255	71	141	212	283	88	177	265	354	106	212	318	424
20	40	20	127	255	382	509	141	283	424	566	177	354	530	707	212	424	636	849
30	40	20	191	382	573	764	212	424	636	849	265	530	795	1061	318	636	955	1273
40	40	20	255	509	764	1018	283	566	849	1131	354	707	1061	1414	424	849	1273	1697
45	40	20	286	573	859	1146	318	636	955	1273	398	795	1193	1591	477	955	1432	1909
50	20	10	159	318	477	636	177	354	530	707	221	442	663	884	265	530	795	1061
60	20	10	191	382	573	764	212	424	636	849	265	530	795	1061	318	636	955	1273
70	20	10	223	445	668	891	247	495	742	990	309	619	928	1237	371	742	1114	1485
80	20	10	255	509	764	1018	283	566	849	1131	354	707	1061	1414	424	849	1273	1697
85	20	10	270	541	811	1082	301	601	902	1202	376	751	1127	1503	451	902	1352	1803

Key		
	LRFD Rated Strength (lbf)	Cable ø
GS10	400	5/64
GS12	945	1/8
GS19	2265	3/16
GS25	3570	1/4
N/A	Exceeds brace kit strength	

Reference Detail p2.13-15, 2.17-21

Maximum Brace Angle, θ_{max} = 60 degrees

Table 1.7C – Trapeze or Cable Tray - Brace Force Demand, T_{cable} (lbs)

Weight (plf)	Longitudinal Spacing (ft)	Transverse Spacing (ft)	z/h 0.25				0.5				0.75				1			
			S_{DS} 0.5	1	1.5	2	0.5	1	1.5	2	0.5	1	1.5	2	0.5	1	1.5	2
			F_P 0.23	0.45	0.68	0.90	0.25	0.50	0.75	1.00	0.31	0.63	0.94	1.25	0.38	0.75	1.13	1.50
10	40	20	90	180	270	360	100	200	300	400	125	250	375	500	150	300	450	600
20	40	20	180	360	540	720	200	400	600	800	250	500	750	1000	300	600	900	1200
30	40	20	270	540	810	1080	300	600	900	1200	375	750	1125	1500	450	900	1350	1800
40	40	20	360	720	1080	1440	400	800	1200	1600	500	1000	1500	2000	600	1200	1800	2400
45	40	20	405	810	1215	1620	450	900	1350	1800	563	1125	1688	2250	675	1350	2025	2700
50	20	10	225	450	675	900	250	500	750	1000	313	625	938	1250	375	750	1125	1500
60	20	10	270	540	810	1080	300	600	900	1200	375	750	1125	1500	450	900	1350	1800
70	20	10	315	630	945	1260	350	700	1050	1400	438	875	1313	1750	525	1050	1575	2100
80	20	10	360	720	1080	1440	400	800	1200	1600	500	1000	1500	2000	600	1200	1800	2400
85	20	10	383	765	1148	1530	425	850	1275	1700	531	1063	1594	2125	638	1275	1913	2550

Key		
	LRFD Rated Strength (lbf)	Cable ø
GS10	400	5/64
GS12	945	1/8
GS19	2265	3/16
GS25	3570	1/4
N/A	Exceeds brace kit strength	

Assumed constants: a_p = 2.5 R_p = 6 I_p = 1.5

Notes:

1. For spacings other than those listed in the table, multiply T_{cable} table values by actual spacing/spacing in the table. Then use maximum LRFD Rated Strength in Key to determine Gripple fastener.
2. Gripple seismic kit is only approved for angles 30-60 degrees
3. Adequacy of pipe, duct, cable tray, etc to span between bracing shall be determined by the engineer of record.
4. "Spacing" provided does not consider the spacing required for gravity support. The scope of this OPM is limited to seismic bracing only.

Section 5 – Brace Force Demand Tables – Table 1.8 – Single Hung Conduit

Reference Detail p2.22-2.23		
Maximum Brace Angle, θ_{max} =	30	degrees
Pipe ø	Max Weight	Spacing
(in.)	(plf)	(ft)
3	11.9	60
3.5	14.6	60
4	17.6	40
5	24.8	40
6	33.3	20

Table 1.8A – Single Hung Conduit - Brace Force Demand, T_{cable} (lbs)

z/h	0.25				0.5				0.75				1			
S_{DS}	0.5	1	1.5	2	0.5	1	1.5	2	0.5	1	1.5	2	0.5	1	1.5	2
F_P	0.23	0.45	0.68	0.90	0.25	0.50	0.75	1.00	0.31	0.63	0.94	1.25	0.38	0.75	1.13	1.50
	186	371	557	742	206	412	618	824	258	515	773	1031	309	618	928	1237
	228	455	683	910	253	506	759	1012	316	632	948	1264	379	759	1138	1517
	183	366	549	732	203	406	610	813	254	508	762	1016	305	610	915	1219
	258	515	773	1031	286	573	859	1145	358	716	1074	1432	430	859	1289	1718
	173	346	519	692	192	385	577	769	240	481	721	961	288	577	865	1154

Key		
	LRFD Rated Strength (lbf)	Cable ø
GS10	400	5/64
GS12	945	1/8
GS19	2265	3/16
GS25	3570	1/4
N/A	Exceeds brace kit strength	

Reference Detail p2.22-2.23		
Maximum Brace Angle, θ_{max} =	45	degrees
Pipe ø	Max Weight	Spacing
(in.)	(plf)	(ft)
3	11.9	60
3.5	14.6	40
4	17.6	40
5	24.8	20
6	33.3	20

Table 1.8B – Single Hung Conduit - Brace Force Demand, T_{cable} (lbs)

z/h	0.25				0.5				0.75				1			
S_{DS}	0.5	1	1.5	2	0.5	1	1.5	2	0.5	1	1.5	2	0.5	1	1.5	2
F_P	0.23	0.45	0.68	0.90	0.25	0.50	0.75	1.00	0.31	0.63	0.94	1.25	0.38	0.75	1.13	1.50
	227	454	682	909	252	505	757	1010	316	631	947	1262	379	757	1136	1515
	186	372	557	743	206	413	619	826	258	516	774	1032	310	619	929	1239
	224	448	672	896	249	498	747	996	311	622	933	1245	373	747	1120	1493
	158	316	473	631	175	351	526	701	219	438	658	877	263	526	789	1052
	212	424	636	848	235	471	706	942	294	589	883	1177	353	706	1060	1413

Key		
	LRFD Rated Strength (lbf)	Cable ø
GS10	400	5/64
GS12	945	1/8
GS19	2265	3/16
GS25	3570	1/4
N/A	Exceeds brace kit strength	

Reference Detail p2.22-2.23		
Maximum Brace Angle, θ_{max} =	60	degrees
Pipe ø	Max Weight	Spacing
(in.)	(plf)	(ft)
3	11.9	60
3.5	14.6	40
4	17.6	40
5	24.8	20
6	33.3	20

Table 1.8C – Single Hung Conduit - Brace Force Demand, T_{cable} (lbs)

z/h	0.25				0.5				0.75				1			
S_{DS}	0.5	1	1.5	2	0.5	1	1.5	2	0.5	1	1.5	2	0.5	1	1.5	2
F_P	0.23	0.45	0.68	0.90	0.25	0.50	0.75	1.00	0.31	0.63	0.94	1.25	0.38	0.75	1.13	1.50
	321	643	964	1285	357	714	1071	1428	446	893	1339	1785	536	1071	1607	2142
	263	526	788	1051	292	584	876	1168	365	730	1095	1460	438	876	1314	1752
	317	634	950	1267	352	704	1056	1408	440	880	1320	1760	528	1056	1584	2112
	223	446	670	893	248	496	744	992	310	620	930	1240	372	744	1116	1488
	300	599	899	1199	333	666	999	1332	416	833	1249	1665	500	999	1499	1998

Key		
	LRFD Rated Strength (lbf)	Cable ø
GS10	400	5/64
GS12	945	1/8
GS19	2265	3/16
GS25	3570	1/4
N/A	Exceeds brace kit strength	

Assumed constants: a_p = 2.5 R_p = 6 I_p = 1.5

Notes:

1. For spacings other than those listed in the table, multiply T_{cable} table values by actual spacing/spacing in the table. Then use maximum LRFD Rated Strength in Key to determine Gripple fastener.
2. Gripple seismic kit is only approved for angles 30-60 degrees
3. Adequacy of pipe, duct, cable tray, etc to span between bracing shall be determined by the engineer of record.
4. "Spacing" provided does not consider the spacing required for gravity support. The scope of this OPM is limited to seismic bracing only.

HCAi DATE: 07/19/2025

Section 5 – Bracing Attachment Designation Tables – Table 2.1 – Steel Pipe Schedule 40 w/ Water & Insulation

Reference Details p 3.1-8

Maximum Brace Angle, θ_{max} = 30 degrees

Table 2.1A – Steel Pipe Schedule 40 w/ Water & Insulation - Bracing Attachment Designation

Pipe ø (in.)	Weight (plf)	Spacing (ft)	z/h: 0.25				0.5				0.75				1			
			S_{DS}: 0.5	1	1.5	2	0.5	1	1.5	2	0.5	1	1.5	2	0.5	1	1.5	2
			F_P: 0.23	0.45	0.68	0.90	0.25	0.50	0.75	1.00	0.31	0.63	0.94	1.25	0.38	0.75	1.13	1.50
1.25	3.6	80	B1	B2	B2	B2	B1	B2	B2	B3	B2	B2	B3	B3	B2	B2	B3	B3
1.5	4.3	80	B1	B2	B2	B3	B1	B2	B2	B3	B2	B2	B3	B3	B2	B2	B3	B3
2	6	80	B2	B2	B3	B3	B2	B2	B3	B3	B2	B3	B3	B4	B2	B3	B4	B4
2.5	8.8	80	B2	B3	B3	B4	B2	B3	B4	B4	B2	B3	B4	B5	B3	B4	B5	B6
3	11.9	80	B2	B3	B4	B5	B2	B3	B4	B5	B3	B4	B5	B6	B3	B4	B6	B7
3.5	14.6	80	B3	B4	B5	B6	B3	B4	B5	B6	B3	B4	B6	B7	B3	B5	B7	N/A
4	17.6	80	B3	B4	B5	B6	B3	B4	B6	B7	B3	B5	B7	N/A	B4	B6	B7	N/A
5	24.8	60	B3	B4	B5	B7	B3	B4	B6	B7	B3	B5	B7	N/A	B4	B6	B7	N/A
6	33.3	60	B3	B5	B7	N/A	B3	B5	B7	N/A	B4	B6	N/A	N/A	B4	B7	N/A	N/A
8	52.5	40	B3	B5	B7	N/A	B4	B6	B7	N/A	B4	B7	N/A	N/A	B5	B7	N/A	N/A
10	77.4	20	B3	B4	B6	B7	B3	B4	B6	B7	B3	B5	B7	N/A	B4	B6	N/A	N/A
12	101.7	20	B3	B5	B7	N/A	B3	B5	B7	N/A	B4	B6	N/A	N/A	B4	B7	N/A	N/A

Reference Details p 3.1-8

Maximum Brace Angle, θ_{max} = 45 degrees

Table 2.1B – Steel Pipe Schedule 40 w/ Water & Insulation - Bracing Attachment Designation

Pipe ø (in.)	Weight (plf)	Spacing (ft)	z/h: 0.25				0.5				0.75				1			
			S_{DS}: 0.5	1	1.5	2	0.5	1	1.5	2	0.5	1	1.5	2	0.5	1	1.5	2
			F_P: 0.23	0.45	0.68	0.90	0.25	0.50	0.75	1.00	0.31	0.63	0.94	1.25	0.38	0.75	1.13	1.50
1.25	3.6	80	B1	B2	B2	B3	B2	B2	B3	B3	B2	B2	B3	B3	B2	B3	B3	B4
1.5	4.3	80	B2	B2	B3	B3	B2	B2	B3	B3	B2	B3	B3	B4	B2	B3	B3	B4
2	6	80	B2	B3	B3	B4	B2	B3	B3	B4	B2	B3	B4	B4	B2	B3	B4	B5
2.5	8.8	80	B2	B3	B4	B4	B2	B3	B4	B5	B3	B4	B5	B6	B3	B4	B5	B6
3	11.9	80	B3	B4	B5	B6	B3	B4	B5	B6	B3	B4	B6	B7	B3	B5	B7	N/A
3.5	14.6	80	B3	B4	B5	B6	B3	B4	B6	B7	B3	B5	B7	N/A	B4	B6	B7	N/A
4	17.6	80	B3	B4	B6	B7	B3	B5	B6	B7	B4	B6	B7	N/A	B4	B6	N/A	N/A
5	24.8	60	B3	B5	B6	B7	B3	B5	B7	N/A	B4	B6	B7	N/A	B4	B7	N/A	N/A
6	33.3	40	B3	B4	B6	B7	B3	B5	B6	B7	B3	B5	B7	N/A	B4	B6	N/A	N/A
8	52.5	20	B3	B4	B5	B6	B3	B4	B5	B6	B3	B5	B6	B7	B3	B5	B7	N/A
10	77.4	20	B3	B5	B6	B7	B3	B5	B7	N/A	B4	B6	N/A	N/A	B4	B7	N/A	N/A
12	101.7	20	B4	B6	B7	N/A	B4	B6	N/A	N/A	B4	B7	N/A	N/A	B5	N/A	N/A	N/A

Reference Details p 3.1-8

Maximum Brace Angle, θ_{max} = 60 degrees

Table 2.1C – Steel Pipe Schedule 40 w/ Water & Insulation - Bracing Attachment Designation

Pipe ø (in.)	Weight (plf)	Spacing (ft)	z/h: 0.25				0.5				0.75				1			
			S_{DS}: 0.5	1	1.5	2	0.5	1	1.5	2	0.5	1	1.5	2	0.5	1	1.5	2
			F_P: 0.23	0.45	0.68	0.90	0.25	0.50	0.75	1.00	0.31	0.63	0.94	1.25	0.38	0.75	1.13	1.50
1.25	3.6	80	B2	B2	B3	B3	B2	B2	B3	B3	B2	B3	B3	B4	B2	B3	B4	B4
1.5	4.3	80	B2	B3	B3	B4	B2	B3	B3	B4	B2	B3	B4	B4	B2	B3	B4	B5
2	6	80	B2	B3	B4	B4	B2	B3	B4	B5	B2	B3	B4	B5	B3	B4	B5	B6
2.5	8.8	80	B3	B4	B5	B6	B3	B4	B5	B6	B3	B4	B6	B7	B3	B5	B7	N/A
3	11.9	80	B3	B4	B6	B7	B3	B5	B6	B7	B3	B5	B7	N/A	B4	B6	N/A	N/A
3.5	14.6	80	B3	B5	B7	N/A	B3	B5	B7	N/A	B4	B6	N/A	N/A	B4	B7	N/A	N/A
4	17.6	60	B3	B5	B6	B7	B3	B5	B7	N/A	B4	B6	B7	N/A	B4	B7	N/A	N/A
5	24.8	40	B3	B4	B6	B7	B3	B5	B6	B7	B4	B6	B7	N/A	B4	B6	N/A	N/A
6	33.3	40	B3	B5	B7	N/A	B4	B6	B7	N/A	B4	B7	N/A	N/A	B5	B7	N/A	N/A
8	52.5	20	B3	B5	B6	B7	B3	B5	B7	N/A	B4	B6	B7	N/A	B4	B7	N/A	N/A
10	77.4	20	B4	B6	N/A	N/A	B4	B7	N/A	N/A	B5	B7	N/A	N/A	B5	N/A	N/A	N/A
12	101.7	10	B3	B5	B6	B7	B3	B5	B7	N/A	B4	B6	B7	N/A	B4	B7	N/A	N/A

Assumed constants: a_p = 2.5 R_p = 6 I_p = 1.5

Key

T_{cable} Max (lbs)	
100	B1
300	B2
600	B3
900	B4
1200	B5
1500	B6
2000	B7

Notes:

1. For spacings other than those listed in the table, multiply T_{cable} table values by actual spacing/spacing in the table. Then use maximum LRFD Rated Strength in Key to determine Gripple fastener.
2. Gripple seismic kit is only approved for angles 30-60 degrees
3. Adequacy of pipe, duct, cable tray, etc to span between bracing shall be determined by the engineer of record.
4. "Spacing" provided does not consider the spacing required for gravity support. The scope of this OPM is limited to seismic bracing only.

Section 5 – Bracing Attachment Designation Tables – Table 2.2 – Cast Iron Pipe w/ Water & Insulation

Reference Details p 3.1-8

Maximum Brace Angle, θ_{max} = 30 degrees

Table 2.2A – Cast Iron Pipe w/ Water & Insulation - Bracing Attachment Designation

Pipe ø (in.)	Weight (plf)	Spacing (ft)	z/h	0.25				0.5				0.75				1			
			S_{DS}	0.5	1	1.5	2	0.5	1	1.5	2	0.5	1	1.5	2	0.5	1	1.5	2
			F_P	0.23	0.45	0.68	0.90	0.25	0.50	0.75	1.00	0.31	0.63	0.94	1.25	0.38	0.75	1.13	1.50
3	8.4	40		B1	B2	B2	B3	B1	B2	B2	B3	B2	B2	B3	B3	B2	B2	B3	B3
4	13	14		B1	B1	B2	B2	B1	B2	B2	B2	B1	B2	B2	B2	B1	B2	B2	B3
5	18	16		B1	B2	B2	B2	B1	B2	B2	B3	B2	B2	B3	B3	B2	B2	B3	B3
6	23.4	17		B2	B2	B3	B3	B2	B2	B3	B3	B2	B2	B3	B3	B2	B3	B3	B4
8	40.2	19		B2	B3	B3	B4	B2	B3	B4	B4	B2	B3	B4	B5	B3	B4	B5	B6
10	60.8	22		B3	B4	B5	B6	B3	B4	B5	B7	B3	B5	B6	B7	B3	B5	B7	N/A
12	82.1	23		B3	B5	B6	B7	B3	B5	B7	N/A	B4	B6	N/A	N/A	B4	B7	N/A	N/A

Key

T_{cable} Max (lbs)	
100	B1
300	B2
600	B3
900	B4
1200	B5
1500	B6
2000	B7

Reference Details p 3.1-8

Maximum Brace Angle, θ_{max} = 45 degrees

Table 2.2B – Cast Iron Pipe w/ Water & Insulation - Bracing Attachment Designation

Pipe ø (in.)	Weight (plf)	Spacing (ft)	z/h	0.25				0.5				0.75				1			
			S_{DS}	0.5	1	1.5	2	0.5	1	1.5	2	0.5	1	1.5	2	0.5	1	1.5	2
			F_P	0.23	0.45	0.68	0.90	0.25	0.50	0.75	1.00	0.31	0.63	0.94	1.25	0.38	0.75	1.13	1.50
3	8.4	12		B1	B1	B1	B2	B1	B1	B2	B2	B1	B1	B2	B2	B1	B2	B2	B2
4	13	14		B1	B2	B2	B2	B1	B2	B2	B2	B1	B2	B2	B3	B1	B2	B2	B3
5	18	16		B1	B2	B2	B3	B2	B2	B3	B3	B2	B2	B3	B3	B2	B3	B3	B4
6	23.4	17		B2	B2	B3	B3	B2	B2	B3	B3	B2	B3	B3	B4	B2	B3	B4	B4
8	40.2	19		B2	B3	B4	B5	B2	B3	B4	B5	B3	B4	B5	B6	B3	B4	B6	B7
10	60.8	22		B3	B4	B6	B7	B3	B5	B6	B7	B3	B5	B7	N/A	B4	B6	N/A	N/A
12	82.1	23		B4	B6	B7	N/A	B4	B6	N/A	N/A	B4	B7	N/A	N/A	B5	N/A	N/A	N/A

Reference Details p 3.1-8

Maximum Brace Angle, θ_{max} = 60 degrees

Table 2.2C – Cast Iron Pipe w/ Water & Insulation - Bracing Attachment Designation

Pipe ø (in.)	Weight (plf)	Spacing (ft)	z/h	0.25				0.5				0.75				1			
			S_{DS}	0.5	1	1.5	2	0.5	1	1.5	2	0.5	1	1.5	2	0.5	1	1.5	2
			F_P	0.23	0.45	0.68	0.90	0.25	0.50	0.75	1.00	0.31	0.63	0.94	1.25	0.38	0.75	1.13	1.50
3	8.4	12		B1	B1	B2	B2	B1	B2	B2	B2	B1	B2	B2	B2	B1	B2	B2	B3
4	13	14		B1	B2	B2	B3	B1	B2	B2	B3	B2	B2	B3	B3	B2	B2	B3	B3
5	18	16		B2	B2	B3	B3	B2	B2	B3	B3	B2	B3	B3	B4	B2	B3	B4	B4
6	23.4	17		B2	B3	B3	B4	B2	B3	B3	B4	B2	B3	B4	B5	B2	B3	B4	B5
8	40.2	19		B3	B4	B5	B6	B3	B4	B5	B7	B3	B5	B6	B7	B3	B5	B7	N/A
10	60.8	22		B4	B6	B7	N/A	B4	B6	N/A	N/A	B4	B7	N/A	N/A	B5	N/A	N/A	N/A
12	82.1	23		B4	B7	N/A	N/A	B5	B7	N/A	N/A	B5	N/A	N/A	N/A	B6	N/A	N/A	N/A

Assumed constants: a_p = 2.5 R_p = 6 I_p = 1.5

Notes:

1. For spacings other than those listed in the table, multiply T_{cable} table values by actual spacing/spacing in the table. Then use maximum LRFD Rated Strength in Key to determine Gripple fastener.
2. Gripple seismic kit is only approved for angles 30-60 degrees
3. Adequacy of pipe, duct, cable tray, etc to span between bracing shall be determined by the engineer of record.
4. "Spacing" provided does not consider the spacing required for gravity support. The scope of this OPM is limited to seismic bracing only.

Section 5 – Bracing Attachment Designation Tables – Table 2.3 – PVC Pipe w/ Water & Insulation

Reference Details p 3.1-8

Maximum Brace Angle, θ_{max} = 30 degrees

Table 2.3A – PVC Pipe w/ Water & Insulation - Bracing Attachment Designation

Pipe ø (in.)	Weight (plf)	Spacing (ft)	z/h: 0.25, S_{DS} = 0.5	0.25, 1	0.25, 1.5	0.25, 2	0.5, 0.5	0.5, 1	0.5, 1.5	0.5, 2	0.75, 0.5	0.75, 1	0.75, 1.5	0.75, 2	1, 0.5	1, 1	1, 1.5	1, 2
			F_P	0.23	0.45	0.68	0.90	0.25	0.50	0.75	1.00	0.31	0.63	0.94	1.25	0.38	0.75	1.13	1.50
1.25	1.1	7		B1	B1	B1	B1	B1	B1	B1	B1	B1	B1	B1	B1	B1	B1	B1	B1
1.5	1.5	9		B1	B1	B1	B1	B1	B1	B1	B1	B1	B1	B1	B1	B1	B1	B1	B1
2	2.1	10		B1	B1	B1	B1	B1	B1	B1	B1	B1	B1	B1	B1	B1	B1	B1	B1
2.5	3.3	11		B1	B1	B1	B1	B1	B1	B1	B1	B1	B1	B1	B1	B1	B1	B1	B1
3	4.8	12		B1	B1	B1	B1	B1	B1	B1	B1	B1	B1	B1	B1	B1	B1	B1	B1
3.5	7.8	13		B1	B1	B1	B2	B1	B1	B1	B2	B1	B1	B2	B2	B1	B1	B2	B2
4	11.7	14		B1	B1	B2	B2	B1	B1	B2	B2	B1	B2	B2	B2	B1	B2	B2	B2
5	16.5	16		B1	B2	B2	B2	B1	B2	B2	B3	B1	B2	B2	B3	B2	B2	B3	B3
6	27.5	17		B2	B2	B3	B3	B2	B2	B3	B3	B2	B3	B3	B4	B2	B3	B4	B4
8	42.5	19		B2	B3	B4	B4	B2	B3	B4	B5	B2	B3	B4	B5	B3	B4	B5	B6
10	59.7	22		B3	B4	B5	B6	B3	B4	B5	B7	B3	B5	B6	B7	B3	B5	B7	N/A
12	71.8	23		B3	B4	B6	B7	B3	B5	B6	B7	B3	B5	B7	N/A	B4	B6	N/A	N/A

Reference Details p 3.1-8

Maximum Brace Angle, θ_{max} = 45 degrees

Table 2.3B – PVC Pipe w/ Water & Insulation - Bracing Attachment Designation

Pipe ø (in.)	Weight (plf)	Spacing (ft)	z/h: 0.25, S_{DS} = 0.5	0.25, 1	0.25, 1.5	0.25, 2	0.5, 0.5	0.5, 1	0.5, 1.5	0.5, 2	0.75, 0.5	0.75, 1	0.75, 1.5	0.75, 2	1, 0.5	1, 1	1, 1.5	1, 2
			F_P	0.23	0.45	0.68	0.90	0.25	0.50	0.75	1.00	0.31	0.63	0.94	1.25	0.38	0.75	1.13	1.50
1.25	1.1	7		B1	B1	B1	B1	B1	B1	B1	B1	B1	B1	B1	B1	B1	B1	B1	B1
1.5	1.5	9		B1	B1	B1	B1	B1	B1	B1	B1	B1	B1	B1	B1	B1	B1	B1	B1
2	2.1	10		B1	B1	B1	B1	B1	B1	B1	B1	B1	B1	B1	B1	B1	B1	B1	B1
2.5	3.3	11		B1	B1	B1	B1	B1	B1	B1	B1	B1	B1	B1	B1	B1	B1	B1	B1
3	4.8	12		B1	B1	B1	B1	B1	B1	B1	B1	B1	B1	B1	B2	B1	B1	B1	B2
3.5	7.8	13		B1	B1	B1	B2	B1	B1	B2	B2	B1	B1	B2	B2	B1	B2	B2	B2
4	11.7	14		B1	B2	B2	B2	B1	B2	B2	B2	B1	B2	B2	B2	B1	B2	B2	B3
5	16.5	16		B1	B2	B2	B3	B1	B2	B2	B3	B2	B2	B3	B3	B2	B2	B3	B3
6	27.5	17		B2	B2	B3	B3	B2	B3	B3	B4	B2	B3	B4	B4	B2	B3	B4	B5
8	42.5	19		B2	B3	B4	B5	B2	B3	B4	B5	B3	B4	B5	B6	B3	B4	B6	B7
10	59.7	22		B3	B4	B6	B7	B3	B5	B6	B7	B3	B5	B7	N/A	B4	B6	N/A	N/A
12	71.8	23		B3	B5	B7	N/A	B3	B5	B7	N/A	B4	B6	N/A	N/A	B4	B7	N/A	N/A

Reference Details p 3.1-8

Maximum Brace Angle, θ_{max} = 60 degrees

Table 2.3C – PVC Pipe w/ Water & Insulation - Bracing Attachment Designation

Pipe ø (in.)	Weight (plf)	Spacing (ft)	z/h: 0.25, S_{DS} = 0.5	0.25, 1	0.25, 1.5	0.25, 2	0.5, 0.5	0.5, 1	0.5, 1.5	0.5, 2	0.75, 0.5	0.75, 1	0.75, 1.5	0.75, 2	1, 0.5	1, 1	1, 1.5	1, 2
			F_P	0.23	0.45	0.68	0.90	0.25	0.50	0.75	1.00	0.31	0.63	0.94	1.25	0.38	0.75	1.13	1.50
1.25	1.1	7		B1	B1	B1	B1	B1	B1	B1	B1	B1	B1	B1	B1	B1	B1	B1	B1
1.5	1.5	9		B1	B1	B1	B1	B1	B1	B1	B1	B1	B1	B1	B1	B1	B1	B1	B1
2	2.1	10		B1	B1	B1	B1	B1	B1	B1	B1	B1	B1	B1	B1	B1	B1	B1	B1
2.5	3.3	11		B1	B1	B1	B1	B1	B1	B1	B1	B1	B1	B1	B1	B1	B1	B1	B2
3	4.8	12		B1	B1	B1	B2	B1	B1	B1	B2	B1	B1	B2	B2	B1	B1	B2	B2
3.5	7.8	13		B1	B1	B2	B2	B1	B2	B2	B2	B1	B2	B2	B2	B1	B2	B2	B3
4	11.7	14		B1	B2	B2	B2	B1	B2	B2	B3	B2	B2	B3	B3	B2	B2	B3	B3
5	16.5	16		B2	B2	B3	B3	B2	B2	B3	B3	B2	B3	B3	B4	B2	B3	B3	B4
6	27.5	17		B2	B3	B4	B4	B2	B3	B4	B5	B2	B3	B4	B5	B3	B4	B5	B6
8	42.5	19		B3	B4	B5	B6	B3	B4	B6	B7	B3	B5	B7	N/A	B4	B6	B7	N/A
10	59.7	22		B3	B5	B7	N/A	B4	B6	B7	N/A	B4	B7	N/A	N/A	B5	B7	N/A	N/A
12	71.8	23		B4	B6	N/A	N/A	B4	B7	N/A	N/A	B5	N/A	N/A	N/A	B6	N/A	N/A	N/A

Assumed constants: a_p = 2.5 R_p = 6 I_p = 1.5

Key

T_{cable} Max (lbs)	
100	B1
300	B2
600	B3
900	B4
1200	B5
1500	B6
2000	B7

Notes:

1. For spacings other than those listed in the table, multiply T_{cable} table values by actual spacing/spacing in the table. Then use maximum LRFD Rated Strength in Key to determine Gripple fastener.
2. Gripple seismic kit is only approved for angles 30-60 degrees
3. Adequacy of pipe, duct, cable tray, etc to span between bracing shall be determined by the engineer of record.
4. "Spacing" provided does not consider the spacing required for gravity support. The scope of this OPM is limited to seismic bracing only.

Section 5 – Bracing Attachment Designation Tables – Table 2.4 – Copper Pipe type K with Gas

Reference Details p 3.1-8

Maximum Brace Angle, θ_{max} = 30 degrees

Table 2.4A – Copper Pipe type K with Gas - Bracing Attachment Designation

Pipe ø (in.)	Weight (plf)	Spacing (ft)	z/h	0.25				0.5				0.75				1			
			S_{DS}	0.5	1	1.5	2	0.5	1	1.5	2	0.5	1	1.5	2	0.5	1	1.5	2
			F_P	0.23	0.45	0.68	0.90	0.25	0.50	0.75	1.00	0.31	0.63	0.94	1.25	0.38	0.75	1.13	1.50
1.25	1.04	80		B1	B1	B1	B1	B1	B1	B1	B1	B1	B1	B1	B2	B1	B1	B2	B2
1.5	1.36	80		B1	B1	B1	B2	B1	B1	B1	B2	B1	B1	B2	B2	B1	B1	B2	B2
2	2.06	80		B1	B1	B2	B2	B1	B1	B2	B2	B1	B2	B2	B2	B1	B2	B2	B2
2.5	2.93	80		B1	B2	B2	B2	B1	B2	B2	B2	B1	B2	B2	B3	B2	B2	B3	B3
3	4	80		B1	B2	B2	B3	B1	B2	B2	B3	B2	B2	B3	B3	B2	B2	B3	B3
3.5	5.3	80		B2	B2	B3	B3	B2	B2	B3	B3	B2	B3	B3	B4	B2	B3	B3	B4
4	6.51	80		B2	B2	B3	B3	B2	B3	B3	B4	B2	B3	B3	B4	B2	B3	B4	B5
5	9.67	60		B2	B3	B3	B4	B2	B3	B3	B4	B2	B3	B4	B4	B2	B3	B4	B5
6	13.9	60		B2	B3	B4	B4	B2	B3	B4	B5	B3	B4	B5	B6	B3	B4	B5	B6
8	25.9	40		B2	B3	B4	B5	B2	B3	B4	B5	B3	B4	B5	B6	B3	B4	B6	B7
10	40.3	20		B2	B3	B4	B4	B2	B3	B4	B5	B2	B3	B4	B5	B3	B4	B5	B6
12	57.8	20		B3	B4	B5	B6	B3	B4	B5	B6	B3	B4	B6	B7	B3	B5	B7	N/A

Reference Details p 3.1-8

Maximum Brace Angle, θ_{max} = 45 degrees

Table 2.4B – Copper Pipe type K with Gas - Bracing Attachment Designation

Pipe ø (in.)	Weight (plf)	Spacing (ft)	z/h	0.25				0.5				0.75				1			
			S_{DS}	0.5	1	1.5	2	0.5	1	1.5	2	0.5	1	1.5	2	0.5	1	1.5	2
			F_P	0.23	0.45	0.68	0.90	0.25	0.50	0.75	1.00	0.31	0.63	0.94	1.25	0.38	0.75	1.13	1.50
1.25	1.04	80		B1	B1	B1	B2	B1	B1	B1	B2	B1	B1	B2	B2	B1	B1	B2	B2
1.5	1.36	80		B1	B1	B2	B2	B1	B1	B2	B2	B1	B1	B2	B2	B1	B2	B2	B2
2	2.06	80		B1	B2	B2	B2	B1	B2	B2	B2	B1	B2	B2	B2	B1	B2	B2	B3
2.5	2.93	80		B1	B2	B2	B2	B1	B2	B2	B3	B2	B2	B3	B3	B2	B2	B3	B3
3	4	80		B2	B2	B3	B3	B2	B2	B3	B3	B2	B2	B3	B3	B2	B3	B3	B4
3.5	5.3	80		B2	B2	B3	B3	B2	B2	B3	B3	B2	B3	B3	B4	B2	B3	B4	B4
4	6.51	80		B2	B3	B3	B4	B2	B3	B3	B4	B2	B3	B4	B5	B2	B3	B4	B5
5	9.67	60		B2	B3	B3	B4	B2	B3	B4	B4	B2	B3	B4	B5	B3	B4	B5	B6
6	13.9	60		B2	B3	B4	B5	B2	B3	B4	B5	B3	B4	B5	B6	B3	B4	B6	B7
8	25.9	40		B3	B4	B5	B6	B3	B4	B5	B6	B3	B5	B6	B7	B3	B5	B7	N/A
10	40.3	20		B2	B3	B4	B5	B2	B3	B4	B5	B3	B4	B5	B6	B3	B4	B6	B7
12	57.8	20		B3	B4	B5	B6	B3	B4	B6	B7	B3	B5	B7	N/A	B4	B6	B7	N/A

Reference Details p 3.1-8

Maximum Brace Angle, θ_{max} = 60 degrees

Table 2.4C – Copper Pipe type K with Gas - Bracing Attachment Designation

Pipe ø (in.)	Weight (plf)	Spacing (ft)	z/h	0.25				0.5				0.75				1			
			S_{DS}	0.5	1	1.5	2	0.5	1	1.5	2	0.5	1	1.5	2	0.5	1	1.5	2
			F_P	0.23	0.45	0.68	0.90	0.25	0.50	0.75	1.00	0.31	0.63	0.94	1.25	0.38	0.75	1.13	1.50
1.25	1.04	80		B1	B1	B2	B2	B1	B1	B2	B2	B1	B2	B2	B2	B1	B2	B2	B2
1.5	1.36	80		B1	B1	B2	B2	B1	B2	B2	B2	B1	B2	B2	B2	B1	B2	B2	B3
2	2.06	80		B1	B2	B2	B2	B1	B2	B2	B3	B2	B2	B3	B3	B2	B2	B3	B3
2.5	2.93	80		B2	B2	B3	B3	B2	B2	B3	B3	B2	B2	B3	B3	B2	B3	B3	B4
3	4	80		B2	B2	B3	B3	B2	B3	B3	B4	B2	B3	B3	B4	B2	B3	B4	B5
3.5	5.3	80		B2	B3	B3	B4	B2	B3	B4	B4	B2	B3	B4	B5	B3	B4	B5	B6
4	6.51	80		B2	B3	B4	B5	B2	B3	B4	B5	B3	B4	B5	B6	B3	B4	B5	B7
5	9.67	60		B2	B3	B4	B5	B2	B3	B4	B5	B3	B4	B5	B6	B3	B4	B6	B7
6	13.9	60		B3	B4	B5	B7	B3	B4	B6	B7	B3	B5	B7	N/A	B4	B6	B7	N/A
8	25.9	40		B3	B5	B6	B7	B3	B5	B7	N/A	B4	B6	B7	N/A	B4	B7	N/A	N/A
10	40.3	20		B3	B4	B5	B6	B3	B4	B6	B7	B3	B5	B7	N/A	B4	B6	B7	N/A
12	57.8	20		B3	B5	B7	N/A	B3	B5	B7	N/A	B4	B6	N/A	N/A	B4	B7	N/A	N/A

Assumed constants: a_p = 2.5 R_p = 6 I_p = 1.5

Key

T_{cable} Max (lbs)	
100	B1
300	B2
600	B3
900	B4
1200	B5
1500	B6
2000	B7

Notes:

1. For spacings other than those listed in the table, multiply T_{cable} table values by actual spacing/spacing in the table. Then use maximum LRFD Rated Strength in Key to determine Gripple fastener.
2. Gripple seismic kit is only approved for angles 30-60 degrees
3. Adequacy of pipe, duct, cable tray, etc to span between bracing shall be determined by the engineer of record.
4. "Spacing" provided does not consider the spacing required for gravity support. The scope of this OPM is limited to seismic bracing only.

Section 5 – Bracing Attachment Designation Tables – Table 2.5 – Copper Pipe type K w/ Water & Insulation

Reference Details p 3.1-8

Maximum Brace Angle, θ_{max} = 30 degrees

Table 2.5A – Copper Pipe type K w/ Water & Insulation - Bracing Attachment Designation

Pipe ø	Weight	Spacing	z/h	0.25				0.5				0.75				1			
			S_{DS}	0.5	1	1.5	2	0.5	1	1.5	2	0.5	1	1.5	2	0.5	1	1.5	2
(in.)	(plf)	(ft)	F_P	0.23	0.45	0.68	0.90	0.25	0.50	0.75	1.00	0.31	0.63	0.94	1.25	0.38	0.75	1.13	1.50
1.25	2.3	80		B1	B1	B2	B2	B1	B2	B2	B2	B1	B2	B2	B2	B1	B2	B2	B3
1.5	2.8	80		B1	B2	B2	B2	B1	B2	B2	B2	B1	B2	B2	B3	B1	B2	B2	B3
2	4.2	80		B1	B2	B2	B3	B1	B2	B2	B3	B2	B2	B3	B3	B2	B2	B3	B3
2.5	5.8	80		B2	B2	B3	B3	B2	B2	B3	B3	B2	B3	B3	B4	B2	B3	B4	B4
3	7.6	80		B2	B3	B3	B4	B2	B3	B3	B4	B2	B3	B4	B4	B2	B3	B4	B5
3.5	10	80		B2	B3	B4	B4	B2	B3	B4	B5	B2	B3	B4	B5	B3	B4	B5	B6
4	12.4	60		B2	B3	B3	B4	B2	B3	B4	B4	B2	B3	B4	B5	B3	B4	B5	B6
5	18.6	60		B2	B3	B4	B5	B3	B4	B5	B6	B3	B4	B6	B7	B3	B5	B6	B7
6	25.1	40		B2	B3	B4	B5	B2	B3	B4	B5	B3	B4	B5	B6	B3	B4	B6	B7
8	43.7	20		B2	B3	B4	B5	B2	B3	B4	B5	B3	B4	B5	B6	B3	B4	B5	B7
10	66.9	20		B3	B4	B5	B6	B3	B4	B5	B7	B3	B5	B6	B7	B3	B5	B7	N/A
12	91.8	20		B3	B5	B6	B7	B3	B5	B7	N/A	B4	B6	B7	N/A	B4	B7	N/A	N/A

Key

T_{cable} Max (lbs)	
100	B1
300	B2
600	B3
900	B4
1200	B5
1500	B6
2000	B7

Reference Details p 3.1-8

Maximum Brace Angle, θ_{max} = 45 degrees

Table 2.5B – Copper Pipe type K w/ Water & Insulation - Bracing Attachment Designation

Pipe ø	Weight	Spacing	z/h	0.25				0.5				0.75				1			
			S_{DS}	0.5	1	1.5	2	0.5	1	1.5	2	0.5	1	1.5	2	0.5	1	1.5	2
(in.)	(plf)	(ft)	F_P	0.23	0.45	0.68	0.90	0.25	0.50	0.75	1.00	0.31	0.63	0.94	1.25	0.38	0.75	1.13	1.50
1.25	2.3	80		B1	B2	B2	B2	B1	B2	B2	B2	B1	B2	B2	B3	B1	B2	B2	B3
1.5	2.8	80		B1	B2	B2	B2	B1	B2	B2	B3	B1	B2	B2	B3	B2	B2	B3	B3
2	4.2	80		B2	B2	B3	B3	B2	B2	B3	B3	B2	B2	B3	B3	B2	B3	B3	B4
2.5	5.8	80		B2	B2	B3	B3	B2	B3	B3	B4	B2	B3	B4	B4	B2	B3	B4	B5
3	7.6	80		B2	B3	B3	B4	B2	B3	B4	B4	B2	B3	B4	B5	B3	B4	B5	B6
3.5	10	80		B2	B3	B4	B5	B2	B3	B4	B5	B3	B4	B5	B6	B3	B4	B6	B7
4	12.4	60		B2	B3	B4	B5	B2	B3	B4	B5	B3	B4	B5	B6	B3	B4	B5	B7
5	18.6	40		B2	B3	B4	B5	B2	B3	B4	B5	B3	B4	B5	B6	B3	B4	B5	B7
6	25.1	20		B2	B3	B3	B4	B2	B3	B3	B4	B2	B3	B4	B4	B2	B3	B4	B5
8	43.7	20		B2	B3	B4	B5	B3	B4	B5	B6	B3	B4	B5	B7	B3	B5	B6	B7
10	66.9	10		B2	B3	B4	B4	B2	B3	B4	B5	B2	B3	B4	B5	B3	B4	B5	B6
12	91.8	10		B2	B3	B4	B5	B3	B4	B5	B6	B3	B4	B6	B7	B3	B5	B6	B7

Reference Details p 3.1-8

Maximum Brace Angle, θ_{max} = 60 degrees

Table 2.5C – Copper Pipe type K w/ Water & Insulation - Bracing Attachment Designation

Pipe ø	Weight	Spacing	z/h	0.25				0.5				0.75				1			
			S_{DS}	0.5	1	1.5	2	0.5	1	1.5	2	0.5	1	1.5	2	0.5	1	1.5	2
(in.)	(plf)	(ft)	F_P	0.23	0.45	0.68	0.90	0.25	0.50	0.75	1.00	0.31	0.63	0.94	1.25	0.38	0.75	1.13	1.50
1.25	2.3	80		B1	B2	B2	B3	B1	B2	B2	B3	B2	B2	B3	B3	B2	B2	B3	B3
1.5	2.8	80		B2	B2	B3	B3	B2	B2	B3	B3	B2	B2	B3	B3	B2	B3	B3	B4
2	4.2	80		B2	B3	B3	B4	B2	B3	B3	B4	B2	B3	B4	B4	B2	B3	B4	B5
2.5	5.8	80		B2	B3	B4	B4	B2	B3	B4	B5	B2	B3	B4	B5	B3	B4	B5	B6
3	7.6	80		B2	B3	B4	B5	B3	B4	B5	B6	B3	B4	B5	B7	B3	B5	B6	B7
3.5	10	60		B2	B3	B4	B5	B2	B3	B4	B5	B3	B4	B5	B6	B3	B4	B6	B7
4	12.4	60		B3	B4	B5	B6	B3	B4	B5	B6	B3	B5	B6	B7	B3	B5	B7	N/A
5	18.6	40		B3	B4	B5	B6	B3	B4	B5	B6	B3	B5	B6	B7	B3	B5	B7	N/A
6	25.1	20		B2	B3	B4	B5	B2	B3	B4	B5	B3	B4	B5	B6	B3	B4	B5	B7
8	43.7	10		B2	B3	B3	B4	B2	B3	B4	B4	B2	B3	B4	B5	B3	B4	B5	B6
10	66.9	10		B3	B4	B5	B6	B3	B4	B5	B6	B3	B4	B6	B7	B3	B5	B7	N/A
12	91.8	10		B3	B4	B6	B7	B3	B5	B6	B7	B3	B5	B7	N/A	B4	B6	N/A	N/A

Assumed constants: a_p = 2.5 R_p = 6 I_p = 1.5

Notes:

1. For spacings other than those listed in the table, multiply T_{cable} table values by actual spacing/spacing in the table. Then use maximum LRFD Rated Strength in Key to determine Gripple fastener.
2. Gripple seismic kit is only approved for angles 30-60 degrees
3. Adequacy of pipe, duct, cable tray, etc to span between bracing shall be determined by the engineer of record.
4. "Spacing" provided does not consider the spacing required for gravity support. The scope of this OPM is limited to seismic bracing only.

Section 5 – Bracing Attachment Designation Tables – Table 2.6 – Round, Oval, or Rectangular Duct

Reference Details p 3.1-8

Maximum Brace Angle, θ_{max} = 30 degrees

Table 2.6A – Round, Oval, or Rectangular Duct - Brace Force Demand, Tcable (lbs)

Weight (plf)	Longitudinal Spacing (ft)	Transverse Spacing (ft)	z/h 0.25				0.5				0.75				1			
			S_{DS} 0.5	1	1.5	2	0.5	1	1.5	2	0.5	1	1.5	2	0.5	1	1.5	2
			F_P 0.23	0.45	0.68	0.90	0.25	0.50	0.75	1.00	0.31	0.63	0.94	1.25	0.38	0.75	1.13	1.50
10	40	20	B1	B2	B2	B2	B1	B2	B2	B2	B1	B2	B2	B2	B1	B2	B2	B3
20	40	20	B2	B2	B3	B3	B2	B2	B3	B3	B2	B2	B3	B3	B2	B3	B3	B4
30	40	20	B2	B3	B3	B4	B2	B3	B3	B4	B2	B3	B4	B4	B2	B3	B4	B5
40	40	20	B2	B3	B4	B4	B2	B3	B4	B5	B2	B3	B4	B5	B3	B4	B5	B6
50	40	20	B2	B3	B4	B5	B2	B3	B4	B5	B3	B4	B5	B6	B3	B4	B6	B7
60	20	10	B2	B3	B3	B4	B2	B3	B3	B4	B2	B3	B4	B4	B2	B3	B4	B5
70	20	10	B2	B3	B3	B4	B2	B3	B4	B4	B2	B3	B4	B5	B3	B4	B5	B6
80	20	10	B2	B3	B4	B4	B2	B3	B4	B5	B2	B3	B4	B5	B3	B4	B5	B6
90	20	10	B2	B3	B4	B5	B2	B3	B4	B5	B3	B4	B5	B6	B3	B4	B5	B7
100	20	10	B2	B3	B4	B5	B2	B3	B4	B5	B3	B4	B5	B6	B3	B4	B6	B7

Key

T_{cable} Max (lbs)	
100	B1
300	B2
600	B3
900	B4
1200	B5
1500	B6
2000	B7

Reference Details p 3.1-8

Maximum Brace Angle, θ_{max} = 45 degrees

Table 2.6B – Round, Oval, or Rectangular Duct - Bracing Attachment Designation

Weight (plf)	Longitudinal Spacing (ft)	Transverse Spacing (ft)	z/h 0.25				0.5				0.75				1			
			S_{DS} 0.5	1	1.5	2	0.5	1	1.5	2	0.5	1	1.5	2	0.5	1	1.5	2
			F_P 0.23	0.45	0.68	0.90	0.25	0.50	0.75	1.00	0.31	0.63	0.94	1.25	0.38	0.75	1.13	1.50
10	40	20	B1	B2	B2	B2	B1	B2	B2	B2	B1	B2	B2	B3	B2	B2	B3	B3
20	40	20	B2	B2	B3	B3	B2	B2	B3	B3	B2	B3	B3	B4	B2	B3	B4	B4
30	40	20	B2	B3	B3	B4	B2	B3	B4	B4	B2	B3	B4	B5	B3	B4	B5	B6
40	40	20	B2	B3	B4	B5	B2	B3	B4	B5	B3	B4	B5	B6	B3	B4	B6	B7
50	40	20	B3	B4	B5	B6	B3	B4	B5	B6	B3	B4	B6	B7	B3	B5	B7	N/A
60	20	10	B2	B3	B3	B4	B2	B3	B4	B4	B2	B3	B4	B5	B3	B4	B5	B6
70	20	10	B2	B3	B4	B4	B2	B3	B4	B5	B3	B4	B5	B6	B3	B4	B5	B6
80	20	10	B2	B3	B4	B5	B2	B3	B4	B5	B3	B4	B5	B6	B3	B4	B6	B7
90	20	10	B2	B3	B4	B5	B3	B4	B5	B6	B3	B4	B5	B7	B3	B5	B6	B7
100	20	10	B3	B4	B5	B6	B3	B4	B5	B6	B3	B4	B6	B7	B3	B5	B7	N/A

Reference Details p 3.1-8

Maximum Brace Angle, θ_{max} = 60 degrees

Table 2.6C – Round, Oval, or Rectangular Duct - Bracing Attachment Designation

Weight (plf)	Longitudinal Spacing (ft)	Transverse Spacing (ft)	z/h 0.25				0.5				0.75				1			
			S_{DS} 0.5	1	1.5	2	0.5	1	1.5	2	0.5	1	1.5	2	0.5	1	1.5	2
			F_P 0.23	0.45	0.68	0.90	0.25	0.50	0.75	1.00	0.31	0.63	0.94	1.25	0.38	0.75	1.13	1.50
10	40	20	B1	B2	B2	B3	B1	B2	B2	B3	B2	B2	B3	B3	B2	B2	B3	B3
20	40	20	B2	B3	B3	B4	B2	B3	B3	B4	B2	B3	B4	B5	B2	B3	B4	B5
30	40	20	B2	B3	B4	B5	B2	B3	B4	B5	B3	B4	B5	B6	B3	B4	B6	B7
40	40	20	B3	B4	B5	B6	B3	B4	B5	B7	B3	B5	B6	B7	B3	B5	B7	N/A
50	40	20	B3	B4	B6	B7	B3	B5	B6	B7	B4	B6	B7	N/A	B4	B6	N/A	N/A
60	20	10	B2	B3	B4	B5	B2	B3	B4	B5	B3	B4	B5	B6	B3	B4	B6	B7
70	20	10	B3	B4	B5	B6	B3	B4	B5	B6	B3	B4	B6	B7	B3	B5	B7	N/A
80	20	10	B3	B4	B5	B6	B3	B4	B5	B7	B3	B5	B6	B7	B3	B5	B7	N/A
90	20	10	B3	B4	B6	B7	B3	B4	B6	B7	B3	B5	B7	N/A	B4	B6	N/A	N/A
100	20	10	B3	B4	B6	B7	B3	B5	B6	B7	B4	B6	B7	N/A	B4	B6	N/A	N/A

Assumed constants: a_p = 2.5 R_p = 6 I_p = 1.5

Notes:

1. For spacings other than those listed in the table, multiply T_{cable} table values by actual spacing/spacing in the table. Then use maximum LRFD Rated Strength in Key to determine Gripple fastener.
2. Gripple seismic kit is only approved for angles 30-60 degrees
3. Adequacy of pipe, duct, cable tray, etc to span between bracing shall be determined by the engineer of record.
4. "Spacing" provided does not consider the spacing required for gravity support. The scope of this OPM is limited to seismic bracing only.

Section 5 – Bracing Attachment Designation Tables – Table 2.7 – Trapeze or Cable Tray

Reference Details p 3.1-8

Maximum Brace Angle, θ_{max} = 30 degrees

Table 2.7A – Trapeze or Cable Tray - Brace Force Demand, Tcable (lbs)

Weight (plf)	Longitudinal Spacing (ft)	Transverse Spacing (ft)	z/h 0.25				0.5				0.75				1			
			S_{DS} 0.5	1	1.5	2	0.5	1	1.5	2	0.5	1	1.5	2	0.5	1	1.5	2
			F_P 0.23	0.45	0.68	0.90	0.25	0.50	0.75	1.00	0.31	0.63	0.94	1.25	0.38	0.75	1.13	1.50
10	40	20	B1	B2	B2	B2	B1	B2	B2	B2	B1	B2	B2	B2	B1	B2	B2	B3
20	40	20	B2	B2	B3	B3	B2	B2	B3	B3	B2	B2	B3	B3	B2	B3	B3	B4
30	40	20	B2	B3	B3	B4	B2	B3	B3	B4	B2	B3	B4	B4	B2	B3	B4	B5
40	40	20	B2	B3	B4	B4	B2	B3	B4	B5	B2	B3	B4	B5	B3	B4	B5	B6
45	40	20	B2	B3	B4	B5	B2	B3	B4	B5	B3	B4	B5	B6	B3	B4	B5	B7
50	20	10	B2	B2	B3	B3	B2	B2	B3	B3	B2	B3	B3	B4	B2	B3	B4	B4
60	20	10	B2	B3	B3	B4	B2	B3	B3	B4	B2	B3	B4	B4	B2	B3	B4	B5
70	20	10	B2	B3	B3	B4	B2	B3	B4	B4	B2	B3	B4	B5	B3	B4	B5	B6
80	20	10	B2	B3	B4	B4	B2	B3	B4	B5	B2	B3	B4	B5	B3	B4	B5	B6
85	20	10	B2	B3	B4	B4	B2	B3	B4	B5	B3	B4	B5	B6	B3	B4	B5	B6

Key

T_{cable} Max (lbs)	
100	B1
300	B2
600	B3
900	B4
1200	B5
1500	B6
2000	B7

Reference Details p 3.1-8

Maximum Brace Angle, θ_{max} = 45 degrees

Table 2.7B – Trapeze or Cable Tray - Brace Force Demand, Tcable (lbs)

Weight (plf)	Longitudinal Spacing (ft)	Transverse Spacing (ft)	z/h 0.25				0.5				0.75				1			
			S_{DS} 0.5	1	1.5	2	0.5	1	1.5	2	0.5	1	1.5	2	0.5	1	1.5	2
			F_P 0.23	0.45	0.68	0.90	0.25	0.50	0.75	1.00	0.31	0.63	0.94	1.25	0.38	0.75	1.13	1.50
10	40	20	B1	B2	B2	B2	B1	B2	B2	B2	B1	B2	B2	B3	B2	B2	B3	B3
20	40	20	B2	B2	B3	B3	B2	B2	B3	B3	B2	B3	B3	B4	B2	B3	B4	B4
30	40	20	B2	B3	B3	B4	B2	B3	B4	B4	B2	B3	B4	B5	B3	B4	B5	B6
40	40	20	B2	B3	B4	B5	B2	B3	B4	B5	B3	B4	B5	B6	B3	B4	B6	B7
45	40	20	B2	B3	B4	B5	B3	B4	B5	B6	B3	B4	B5	B7	B3	B5	B6	B7
50	20	10	B2	B3	B3	B4	B2	B3	B3	B4	B2	B3	B4	B4	B2	B3	B4	B5
60	20	10	B2	B3	B3	B4	B2	B3	B4	B4	B2	B3	B4	B5	B3	B4	B5	B6
70	20	10	B2	B3	B4	B4	B2	B3	B4	B5	B3	B4	B5	B6	B3	B4	B5	B6
80	20	10	B2	B3	B4	B5	B2	B3	B4	B5	B3	B4	B5	B6	B3	B4	B6	B7
85	20	10	B2	B3	B4	B5	B3	B4	B5	B6	B3	B4	B5	B7	B3	B5	B6	B7

Reference Details p 3.1-8

Maximum Brace Angle, θ_{max} = 60 degrees

Table 2.7C – Trapeze or Cable Tray - Brace Force Demand, Tcable (lbs)

Weight (plf)	Longitudinal Spacing (ft)	Transverse Spacing (ft)	z/h 0.25				0.5				0.75				1			
			S_{DS} 0.5	1	1.5	2	0.5	1	1.5	2	0.5	1	1.5	2	0.5	1	1.5	2
			F_P 0.23	0.45	0.68	0.90	0.25	0.50	0.75	1.00	0.31	0.63	0.94	1.25	0.38	0.75	1.13	1.50
10	40	20	B1	B2	B2	B3	B1	B2	B2	B3	B2	B2	B3	B3	B2	B2	B3	B3
20	40	20	B2	B3	B3	B4	B2	B3	B3	B4	B2	B3	B4	B5	B2	B3	B4	B5
30	40	20	B2	B3	B4	B5	B2	B3	B4	B5	B3	B4	B5	B6	B3	B4	B6	B7
40	40	20	B3	B4	B5	B6	B3	B4	B5	B7	B3	B5	B6	B7	B3	B5	B7	N/A
45	40	20	B3	B4	B6	B7	B3	B4	B6	B7	B3	B5	B7	N/A	B4	B6	N/A	N/A
50	20	10	B2	B3	B4	B4	B2	B3	B4	B5	B3	B4	B5	B6	B3	B4	B5	B6
60	20	10	B2	B3	B4	B5	B2	B3	B4	B5	B3	B4	B5	B6	B3	B4	B6	B7
70	20	10	B3	B4	B5	B6	B3	B4	B5	B6	B3	B4	B6	B7	B3	B5	B7	N/A
80	20	10	B3	B4	B5	B6	B3	B4	B5	B7	B3	B5	B6	B7	B3	B5	B7	N/A
85	20	10	B3	B4	B5	B7	B3	B4	B6	B7	B3	B5	B7	N/A	B4	B6	B7	N/A

Assumed constants: a_p = 2.5 R_p = 6 I_p = 1.5

Notes:

1. For spacings other than those listed in the table, multiply T_{cable} table values by actual spacing/spacing in the table. Then use maximum LRFD Rated Strength in Key to determine Gripple fastener.
2. Gripple seismic kit is only approved for angles 30-60 degrees
3. Adequacy of pipe, duct, cable tray, etc to span between bracing shall be determined by the engineer of record.
4. "Spacing" provided does not consider the spacing required for gravity support. The scope of this OPM is limited to seismic bracing only.

Section 5 – Bracing Attachment Designation Tables – Table 2.8 – Single Hung Conduit

Reference Details p 3.1-8

Maximum Brace Angle, θ_{max} = 30 degrees

Table 2.8A – Single Hung Conduit - Bracing Attachment Designation

Pipe ø (in.)	Max Weight (plf)	Spacing (ft)	z/h	0.25				0.5				0.75				1			
			S_{DS}	0.5	1	1.5	2	0.5	1	1.5	2	0.5	1	1.5	2	0.5	1	1.5	2
			F_P	0.23	0.45	0.68	0.90	0.25	0.50	0.75	1.00	0.31	0.63	0.94	1.25	0.38	0.75	1.13	1.50
3	12.6	60		B2	B3	B3	B4	B2	B3	B4	B4	B2	B3	B4	B5	B3	B4	B5	B6
3.5	16	60		B2	B3	B4	B5	B2	B3	B4	B5	B3	B4	B5	B6	B3	B4	B5	B7
4	19.67	40		B2	B3	B3	B4	B2	B3	B4	B4	B2	B3	B4	B5	B3	B4	B5	B6
5	28.8	40		B2	B3	B4	B5	B2	B3	B4	B5	B3	B4	B5	B6	B3	B4	B6	B7
6	40	20		B2	B3	B3	B4	B2	B3	B3	B4	B2	B3	B4	B5	B2	B3	B4	B5

Key

T_{cable} Max (lbs)	
100	B1
300	B2
600	B3
900	B4
1200	B5
1500	B6
2000	B7

Reference Details p 3.1-8

Maximum Brace Angle, θ_{max} = 45 degrees

Table 2.8B – Single Hung Conduit - Bracing Attachment Designation

Pipe ø (in.)	Max Weight (plf)	Spacing (ft)	z/h	0.25				0.5				0.75				1			
			S_{DS}	0.5	1	1.5	2	0.5	1	1.5	2	0.5	1	1.5	2	0.5	1	1.5	2
			F_P	0.23	0.45	0.68	0.90	0.25	0.50	0.75	1.00	0.31	0.63	0.94	1.25	0.38	0.75	1.13	1.50
3	12.6	60		B2	B3	B4	B5	B2	B3	B4	B5	B3	B4	B5	B6	B3	B4	B5	B7
3.5	16	40		B2	B3	B3	B4	B2	B3	B4	B4	B2	B3	B4	B5	B3	B4	B5	B6
4	19.67	40		B2	B3	B4	B4	B2	B3	B4	B5	B3	B4	B5	B6	B3	B4	B5	B6
5	28.8	20		B2	B3	B3	B4	B2	B3	B3	B4	B2	B3	B4	B4	B2	B3	B4	B5
6	40	20		B2	B3	B4	B4	B2	B3	B4	B5	B2	B3	B4	B5	B3	B4	B5	B6

Reference Details p 3.1-8

Maximum Brace Angle, θ_{max} = 60 degrees

Table 2.8C – Single Hung Conduit - Bracing Attachment Designation

Pipe ø (in.)	Max Weight (plf)	Spacing (ft)	z/h	0.25				0.5				0.75				1			
			S_{DS}	0.5	1	1.5	2	0.5	1	1.5	2	0.5	1	1.5	2	0.5	1	1.5	2
			F_P	0.23	0.45	0.68	0.90	0.25	0.50	0.75	1.00	0.31	0.63	0.94	1.25	0.38	0.75	1.13	1.50
3	12.6	60		B3	B4	B5	B6	B3	B4	B5	B6	B3	B4	B6	B7	B3	B5	B7	0
3.5	16	40		B2	B3	B4	B5	B2	B3	B4	B5	B3	B4	B5	B6	B3	B4	B6	B7
4	19.67	40		B3	B4	B5	B6	B3	B4	B5	B6	B3	B4	B6	B7	B3	B5	B7	0
5	28.8	20		B2	B3	B4	B4	B2	B3	B4	B5	B3	B4	B5	B6	B3	B4	B5	B6
6	40	20		B2	B3	B4	B5	B3	B4	B5	B6	B3	B4	B6	B7	B3	B5	B6	B7

Assumed constants: a_p = 2.5 R_p = 6 I_p = 1.5

DATE: 07/19/2025

Notes:

1. For spacings other than those listed in the table, multiply T_{cable} table values by actual spacing/spacing in the table. Then use maximum LRFD Rated Strength in Key to determine Gripple fastener.
2. Gripple seismic kit is only approved for angles 30-60 degrees
3. Adequacy of pipe, duct, cable tray, etc to span between bracing shall be determined by the engineer of record.
4. "Spacing" provided does not consider the spacing required for gravity support. The scope of this OPM is limited to seismic bracing only.

Section 5 – Compression Rod Demand Tables – Table 3.1 – Steel Pipe w/ Water & Insulation

Reference Detail p2.1-3

Maximum Brace Angle, θ_{max} = 30 degrees

Table 3.1A - Steel Pipe w/ Water & Insulation - Compression Rod Demand, F_c (lbs)

Pipe ø (in.)	Weight (plf)	Spacing (ft)	z/h 0.25 S_{DS} 0.5	0.25 1	0.25 1.5	0.25 2	0.5 0.5	0.5 1	0.5 1.5	0.5 2.5	0.75 0.5	0.75 1	0.75 1.5	0.75 2	1 0.5	1 1	1 1.5	1 2
			F_p 0.23	0.45	0.68	0.90	0.25	0.50	0.75	1.25	0.31	0.63	0.94	1.25	0.38	0.75	1.13	1.50
1.25	3.6	80		66	132	199	265	70	141	211	352	81	162	242	323	91	182	273	365
1.5	4.3	80		79	158	237	316	84	168	252	420	96	193	289	386	109	218	327	436
2	6	80		110	221	331	441	117	235	352	586	135	269	404	538	152	304	456	608
2.5	8.8	80		162	324	486	647	172	344	516	860	197	395	592	790	223	446	668	891
3	11.9	80		219	438	657	875	233	465	698	1163	267	534	801	1068	301	603	904	1205
3.5	14.6	80		269	537	806	1074	285	571	856	1427	328	655	983	1310	370	739	1109	1479
4	17.6	80		324	647	971	1295	344	688	1032	1720	395	790	1185	1579	446	891	1337	1783
5	24.8	60		342	684	1026	1368	364	727	1091	1818	417	835	1252	1669	471	942	1413	1884
6	33.3	60		459	919	1378	1837	488	976	1465	2441	560	1121	1681	2241	632	1265	1897	2530
8	52.5	40		483	966	1448	1931	513	1026	1539	2566	589	1178	1767	2356	665	1329	1994	2659
10	77.4	20		356	712	1068	1424	378	756	1135	1891	434	868	1302	1736	490	980	1470	1960
12	101.7	20		468	935	1403	1870	497	994	1491	2485	570	1141	1711	2282	644	1288	1931	2575

Key (Reference Detail 4.1)

Rod ø (in)	Fc Max	Lmax
3/8	440	14
1/2	739	20
5/8	1218	25
3/4	1766	31
NA	NA	NA

Reference Detail p2.1-3

Maximum Brace Angle, θ_{max} = 45 degrees

Table 3.1B - Steel Pipe w/ Water & Insulation - Compression Rod Demand, F_c (lbs)

Pipe ø (in.)	Weight (plf)	Spacing (ft)	z/h 0.25 S_{DS} 0.5	0.25 1	0.25 1.5	0.25 2	0.5 0.5	0.5 1	0.5 1.5	0.5 2.5	0.75 0.5	0.75 1	0.75 1.5	0.75 2	1 0.5	1 1	1 1.5	1 2
			F_p 0.23	0.45	0.68	0.90	0.25	0.50	0.75	1.25	0.31	0.63	0.94	1.25	0.38	0.75	1.13	1.50
1.25	3.6	80		94	187	281	374	101	202	302	504	119	238	356	475	137	274	410	547
1.5	4.3	80		112	224	335	447	120	241	361	602	142	284	426	568	163	327	490	654
2	6	80		156	312	468	624	168	336	504	840	198	396	594	792	228	456	684	912
2.5	8.8	80		229	458	686	915	246	493	739	1232	290	581	871	1162	334	669	1003	1338
3	11.9	80		309	619	928	1238	333	666	1000	1666	393	785	1178	1571	452	904	1357	1809
3.5	14.6	80		380	759	1139	1518	409	818	1226	2044	482	964	1445	1927	555	1110	1664	2219
4	17.6	80		458	915	1373	1830	493	986	1478	2464	581	1162	1742	2323	669	1338	2006	2675
5	24.8	60		484	967	1451	1934	521	1042	1562	2604	614	1228	1841	2455	707	1414	2120	2827
6	33.3	40		433	866	1299	1732	466	932	1399	2331	549	1099	1648	2198	633	1265	1898	2531
8	52.5	20		341	683	1024	1365	368	735	1103	1838	433	866	1299	1733	499	998	1496	1995
10	77.4	20		503	1006	1509	2012	542	1084	1625	2709	639	1277	1916	2554	735	1471	2206	2941
12	101.7	20		661	1322	1983	2644	712	1424	2136	3560	839	1678	2517	3356	966	1932	2898	3865

Key (Reference Detail 4.1)

Rod ø (in)	Fc Max	Lmax
3/8	440	14
1/2	739	20
5/8	1218	25
3/4	1766	31
NA	NA	NA

Reference Detail p2.1-3

Maximum Brace Angle, θ_{max} = 60 degrees

Table 3.1C - Steel Pipe w/ Water & Insulation - Compression Rod Demand, F_c (lbs)

Pipe ø (in.)	Weight (plf)	Spacing (ft)	z/h 0.25 S_{DS} 0.5	0.25 1	0.25 1.5	0.25 2	0.5 0.5	0.5 1	0.5 1.5	0.5 2.5	0.75 0.5	0.75 1	0.75 1.5	0.75 2	1 0.5	1 1	1 1.5	1 2
			F_p 0.23	0.45	0.68	0.90	0.25	0.50	0.75	1.25	0.31	0.63	0.94	1.25	0.38	0.75	1.13	1.50
1.25	3.6	80		141	282	423	564	154	307	461	768	185	369	554	739	216	432	648	863
1.5	4.3	80		168	337	505	674	183	367	550	917	221	441	662	882	258	516	774	1031
2	6	80		235	470	705	940	256	512	768	1279	308	616	923	1231	360	720	1079	1439
2.5	8.8	80		345	690	1034	1379	375	750	1126	1876	451	903	1354	1806	528	1055	1583	2111
3	11.9	80		466	932	1399	1865	507	1015	1522	2537	610	1221	1831	2442	714	1427	2141	2854
3.5	14.6	80		572	1144	1716	2288	623	1245	1868	3113	749	1498	2247	2996	875	1751	2626	3502
4	17.6	60		517	1034	1551	2069	563	1126	1689	2814	677	1354	2032	2709	791	1583	2374	3166
5	24.8	40		486	972	1457	1943	529	1057	1586	2644	636	1272	1908	2545	744	1487	2231	2974
6	33.3	40		652	1305	1957	2609	710	1420	2130	3550	854	1708	2562	3417	998	1997	2995	3993
8	52.5	20		514	1028	1543	2057	560	1119	1679	2798	673	1347	2020	2693	787	1574	2361	3148
10	77.4	20		758	1516	2274	3032	825	1650	2475	4126	993	1985	2978	3971	1160	2321	3481	4641
12	101.7	10		498	996	1494	1992	542	1084	1626	2710	652	1304	1957	2609	762	1525	2287	3049

Key (Reference Detail 4.1)

Rod ø (in)	Fc Max	Lmax
3/8	440	14
1/2	739	20
5/8	1218	25
3/4	1766	31
NA	NA	NA

Assumed constants: a_p = 2.5 R_p = 6 I_p = 1.5

Notes:

1. For spacings other than those listed in the table, multiply T_{cable} table values by actual spacing/spacing in the table. Then use maximum LRFD Rated Strength in Key to determine Gripple fastener.
2. Gripple seismic kit is only approved for angles 30-60 degrees
3. Adequacy of pipe, duct, cable tray, etc to span between bracing shall be determined by the engineer of record.
4. "Spacing" provided does not consider the spacing required for gravity support. The scope of this OPM is limited to seismic bracing only.

Section 5 – Compression Rod Demand Tables – Table 3.2 – Cast Iron Pipe w/ Water & Insulation

Reference Detail p2.1-3

Maximum Brace Angle, θ_{max} = 30 degrees

Table 3.2A – Cast Iron Pipe w/ Water & Insulation - Compression Rod Demand, F_c (lbs)

Pipe ø (in.)	Weight (plf)	Spacing (ft)	z/h 0.25				0.5				0.75				1			
			S_{DS} 0.5	1	1.5	2	0.5	1	1.5	2	0.5	1	1.5	2	0.5	1	1.5	2
			F_P 0.23	0.45	0.68	0.90	0.25	0.50	0.75	1.00	0.31	0.63	0.94	1.25	0.38	0.75	1.13	1.50
3	8.4	40	77	154	232	309	82	164	246	328	94	188	283	377	106	213	319	425
4	13	14	42	84	126	167	44	89	133	178	51	102	153	204	58	115	173	230
5	18	16	66	132	199	265	70	141	211	281	81	162	242	323	91	182	273	365
6	23.4	17	91	183	274	366	97	194	292	389	112	223	335	446	126	252	378	504
8	40.2	19	176	351	527	702	187	373	560	747	214	428	643	857	242	483	725	967
10	60.8	22	308	615	923	1230	327	654	980	1307	375	750	1125	1500	423	847	1270	1693
12	82.1	23	434	868	1302	1737	461	923	1384	1846	530	1059	1589	2118	598	1195	1793	2391

Key (Reference Detail 4.1)

Rod ø (in)	Fc Max	Lmax
3/8	440	14
1/2	739	20
5/8	1218	25
3/4	1766	31
NA	NA	NA

Reference Detail p2.1-3

Maximum Brace Angle, θ_{max} = 45 degrees

Table 3.2B – Cast Iron Pipe w/ Water & Insulation - Compression Rod Demand, F_c (lbs)

Pipe ø (in.)	Weight (plf)	Spacing (ft)	z/h 0.25				0.5				0.75				1			
			S_{DS} 0.5	1	1.5	2	0.5	1	1.5	2	0.5	1	1.5	2	0.5	1	1.5	2
			F_P 0.23	0.45	0.68	0.90	0.25	0.50	0.75	1.00	0.31	0.63	0.94	1.25	0.38	0.75	1.13	1.50
3	8.4	12	33	66	98	131	35	71	106	141	42	83	125	166	48	96	144	192
4	13	14	59	118	177	237	64	127	191	255	75	150	225	300	86	173	259	346
5	18	16	94	187	281	374	101	202	302	403	119	238	356	475	137	274	410	547
6	23.4	17	129	259	388	517	139	278	418	557	164	328	492	656	189	378	567	756
8	40.2	19	248	496	745	993	267	535	802	1069	315	630	945	1260	363	726	1088	1451
10	60.8	22	435	869	1304	1739	468	936	1404	1873	552	1104	1655	2207	635	1271	1906	2541
12	82.1	23	614	1227	1841	2455	661	1322	1983	2644	779	1558	2337	3116	897	1794	2691	3588

Key (Reference Detail 4.1)

Rod ø (in)	Fc Max	Lmax
3/8	440	14
1/2	739	20
5/8	1218	25
3/4	1766	31
NA	NA	NA

Reference Detail p2.1-3

Maximum Brace Angle, θ_{max} = 60 degrees

Table 3.2C – Cast Iron Pipe w/ Water & Insulation - Compression Rod Demand, F_c (lbs)

Pipe ø (in.)	Weight (plf)	Spacing (ft)	z/h 0.25				0.5				0.75				1			
			S_{DS} 0.5	1	1.5	2	0.5	1	1.5	2	0.5	1	1.5	2	0.5	1	1.5	2
			F_P 0.23	0.45	0.68	0.90	0.25	0.50	0.75	1.00	0.31	0.63	0.94	1.25	0.38	0.75	1.13	1.50
3	8.4	12	49	99	148	197	54	107	161	215	65	129	194	259	76	151	227	302
4	13	14	89	178	267	357	97	194	291	388	117	233	350	467	136	273	409	546
5	18	16	141	282	423	564	154	307	461	614	185	369	554	739	216	432	648	863
6	23.4	17	195	390	584	779	212	424	636	848	255	510	765	1020	298	596	894	1193
8	40.2	19	374	748	1122	1496	407	814	1221	1628	490	980	1469	1959	572	1145	1717	2290
10	60.8	22	655	1310	1965	2620	713	1426	2139	2852	858	1716	2573	3431	1003	2005	3008	4010
12	82.1	23	925	1849	2774	3699	1006	2013	3019	4026	1211	2422	3633	4844	1415	2831	4246	5661

Key (Reference Detail 4.1)

Rod ø (in)	Fc Max	Lmax
3/8	440	14
1/2	739	20
5/8	1218	25
3/4	1766	31
NA	NA	NA

Assumed constants: a_p = 2.5 6 I_p = 1.5

Notes:

1. For spacings other than those listed in the table, multiply T_{cable} table values by actual spacing/spacing in the table. Then use maximum LRFD Rated Strength in Key to determine Gripple fastener.
2. Gripple seismic kit is only approved for angles 30-60 degrees
3. Adequacy of pipe, duct, cable tray, etc to span between bracing shall be determined by the engineer of record.
4. "Spacing" provided does not consider the spacing required for gravity support. The scope of this OPM is limited to seismic bracing only.

Section 5 – Compression Rod Demand Tables – Table 3.3 – PVC Pipe w/ Water & Insulation

Reference Detail p2.1-3

Maximum Brace Angle, θ_{max} = 30 degrees

Table 3.3A - PVC Pipe w/ Water & Insulation - Compression Rod Demand, F_c (lbs)

Pipe ø (in.)	Weight (plf)	Spacing (ft)	z/h = 0.25, S_{DS} = 0.5	0.25, 1	0.25, 1.5	0.25, 2	0.5, 0.5	0.5, 1	0.5, 1.5	0.5, 2.5	0.75, 0.5	0.75, 1	0.75, 1.5	0.75, 2	1, 0.5	1, 1	1, 1.5	1, 2
			F_p = 0.23	0.45	0.68	0.90	0.25	0.50	0.75	1.25	0.31	0.63	0.94	1.25	0.38	0.75	1.13	1.50
1.25	1.1	7	2	4	5	7	2	4	6	10	2	4	7	9	2	5	7	10
1.5	1.5	9	3	6	9	12	3	6	10	16	4	7	11	15	4	8	12	17
2	2.1	10	5	10	15	20	5	10	16	26	6	12	18	24	7	13	20	27
2.5	3.3	11	8	17	25	33	9	18	26	44	10	20	30	40	11	23	34	46
3	4.8	12	13	26	39	53	14	28	42	70	16	32	48	64	18	36	54	72
3.5	7.8	13	23	46	69	93	25	49	74	123	28	57	85	113	32	64	96	128
4	11.7	14	38	75	113	151	40	80	120	200	46	92	138	184	52	104	156	208
5	16.5	16	61	121	182	242	64	129	193	322	74	148	222	295	83	167	250	333
6	27.5	17	108	215	323	430	114	229	343	572	131	262	394	525	148	296	444	592
8	42.5	19	186	371	557	743	197	395	592	987	226	453	679	906	256	511	767	1023
10	59.7	22	302	604	905	1207	321	642	962	1604	368	736	1104	1472	415	831	1246	1662
12	71.8	23	379	759	1138	1518	403	807	1210	2016	463	926	1388	1851	522	1045	1567	2090

Key (Reference Detail 4.1)

Rod ø (in)	Fc Max	Lmax
3/8	440	14
1/2	739	20
5/8	1218	25
3/4	1766	31
NA	NA	NA

Reference Detail p2.1-3

Maximum Brace Angle, θ_{max} = 45 degrees

Table 3.3B - PVC Pipe w/ Water & Insulation - Compression Rod Demand, F_c (lbs)

Pipe ø (in.)	Weight (plf)	Spacing (ft)	z/h = 0.25, S_{DS} = 0.5	0.25, 1	0.25, 1.5	0.25, 2	0.5, 0.5	0.5, 1	0.5, 1.5	0.5, 2.5	0.75, 0.5	0.75, 1	0.75, 1.5	0.75, 2	1, 0.5	1, 1	1, 1.5	1, 2
			F_p = 0.23	0.45	0.68	0.90	0.25	0.50	0.75	1.25	0.31	0.63	0.94	1.25	0.38	0.75	1.13	1.50
1.25	1.1	7	3	5	8	10	3	5	8	14	3	6	10	13	4	7	11	15
1.5	1.5	9	4	8	13	17	5	9	14	23	5	11	16	22	6	12	19	25
2	2.1	10	7	14	21	28	7	15	22	37	9	18	26	35	10	20	30	40
2.5	3.3	11	12	23	35	47	13	25	38	63	15	30	45	59	17	34	51	68
3	4.8	12	19	37	56	74	20	40	60	100	24	47	71	94	27	54	82	109
3.5	7.8	13	33	65	98	131	35	71	106	176	42	83	125	166	48	96	144	191
4	11.7	14	53	107	160	213	57	115	172	287	68	135	203	271	78	156	234	312
5	16.5	16	86	171	257	342	92	184	277	461	109	217	326	435	125	250	375	500
6	27.5	17	152	304	456	608	164	327	491	819	193	386	579	772	222	444	667	889
8	42.5	19	262	525	787	1050	283	565	848	1413	333	666	1000	1333	384	767	1151	1535
10	59.7	22	427	853	1280	1707	459	919	1378	2297	542	1083	1625	2166	624	1247	1871	2494
12	71.8	23	536	1073	1609	2146	578	1155	1733	2888	681	1362	2042	2723	784	1568	2352	3136

Key (Reference Detail 4.1)

Rod ø (in)	Fc Max	Lmax
3/8	440	14
1/2	739	20
5/8	1218	25
3/4	1766	31
NA	NA	NA

Reference Detail p2.1-3

Maximum Brace Angle, θ_{max} = 60 degrees

Table 3.3C - PVC Pipe w/ Water & Insulation - Compression Rod Demand, F_c (lbs)

Pipe ø (in.)	Weight (plf)	Spacing (ft)	z/h = 0.25, S_{DS} = 0.5	0.25, 1	0.25, 1.5	0.25, 2	0.5, 0.5	0.5, 1	0.5, 1.5	0.5, 2.5	0.75, 0.5	0.75, 1	0.75, 1.5	0.75, 2	1, 0.5	1, 1	1, 1.5	1, 2
			F_p = 0.23	0.45	0.68	0.90	0.25	0.50	0.75	1.25	0.31	0.63	0.94	1.25	0.38	0.75	1.13	1.50
1.25	1.1	7	4	8	12	15	4	8	13	21	5	10	15	20	6	12	18	24
1.5	1.5	9	6	13	19	26	7	14	21	35	8	17	25	33	10	20	29	39
2	2.1	10	10	21	31	42	11	23	34	57	14	27	41	55	16	32	48	64
2.5	3.3	11	18	35	53	70	19	38	58	96	23	46	69	92	27	54	81	108
3	4.8	12	28	56	84	112	31	61	92	153	37	73	110	147	43	86	129	172
3.5	7.8	13	49	99	148	197	54	107	161	269	65	129	194	258	76	151	227	302
4	11.7	14	80	161	241	321	87	175	262	437	105	210	316	421	123	246	369	492
5	16.5	16	129	258	387	516	140	281	421	702	169	338	507	676	197	395	592	790
6	27.5	17	229	458	687	916	249	499	748	1247	300	600	900	1200	351	701	1052	1403
8	42.5	19	396	791	1187	1582	431	861	1292	2153	518	1036	1554	2072	605	1211	1816	2422
10	59.7	22	643	1286	1929	2571	700	1399	2099	3499	842	1684	2525	3367	984	1968	2952	3936
12	71.8	23	808	1617	2425	3233	880	1759	2639	4399	1058	2117	3175	4234	1237	2474	3711	4948

Key (Reference Detail 4.1)

Rod ø (in)	Fc Max	Lmax
3/8	440	14
1/2	739	20
5/8	1218	25
3/4	1766	31
NA	NA	NA

Assumed constants: a_p = 2.5 R_p = 6 I_p = 1.5

Notes:

1. For spacings other than those listed in the table, multiply T_{cable} table values by actual spacing/spacing in the table. Then use maximum LRFD Rated Strength in Key to determine Gripple fastener.
2. Gripple seismic kit is only approved for angles 30-60 degrees
3. Adequacy of pipe, duct, cable tray, etc to span between bracing shall be determined by the engineer of record.
4. "Spacing" provided does not consider the spacing required for gravity support. The scope of this OPM is limited to seismic bracing only.

OPM-0709 REVIEWED FOR CODE COMPLIANCE TEXAS BUILDING CODE, 2022

Section 5 – Compression Rod Tables – Table 3.4 – Copper Pipe type K with Gas

Reference Detail p2.1-3		
Maximum Brace Angle, θ_{max} =	30	degrees
Pipe ø	Weight	Spacing
(in.)	(plf)	(ft)
1.25	1.04	80
1.5	1.36	80
2	2.06	80
2.5	2.93	80
3	4	80
3.5	5.3	80
4	6.51	80
5	9.67	60
6	13.9	60
8	25.9	40
10	40.3	20
12	57.8	20

Table 3.4A – Copper Pipe type K with Gas - Compression Rod Demand, F_c (lbs)

z/h	0.25				0.5				0.75				1			
S_{DS}	0.5	1	1.5	2	0.5	1	1.5	2	0.5	1	1.5	2	0.5	1	1.5	2
F_P	0.23	0.45	0.68	0.90	0.25	0.50	0.75	1.00	0.31	0.63	0.94	1.25	0.38	0.75	1.13	1.50
	19	38	57	77	20	41	61	81	23	47	70	93	26	53	79	105
	25	50	75	100	27	53	80	106	31	61	92	122	34	69	103	138
	38	76	114	152	40	81	121	161	46	92	139	185	52	104	156	209
	54	108	162	216	57	115	172	229	66	131	197	263	74	148	223	297
	74	147	221	294	78	156	235	313	90	179	269	359	101	203	304	405
	97	195	292	390	104	207	311	414	119	238	357	476	134	268	403	537
	120	239	359	479	127	255	382	509	146	292	438	584	165	330	495	659
	133	267	400	534	142	284	425	567	163	325	488	651	184	367	551	735
	192	383	575	767	204	408	611	815	234	468	702	935	264	528	792	1056
	238	476	715	953	253	506	759	1013	291	581	872	1162	328	656	984	1312
	185	371	556	741	197	394	591	788	226	452	678	904	255	510	765	1020
	266	532	797	1063	282	565	847	1130	324	648	973	1297	366	732	1098	1464

Key (Reference Detail 4.1)		
Rod ø (in)	Fc Max	Lmax
3/8	440	14
1/2	739	20
5/8	1218	25
3/4	1766	31
NA	NA	NA

Reference Detail p2.1-3		
Maximum Brace Angle, θ_{max} =	45	degrees
Pipe ø	Weight	Spacing
(in.)	(plf)	(ft)
1.25	1.04	80
1.5	1.36	80
2	2.06	80
2.5	2.93	80
3	4	80
3.5	5.3	80
4	6.51	80
5	9.67	60
6	13.9	60
8	25.9	40
10	40.3	20
12	57.8	20

Table 3.4B – Copper Pipe type K with Gas - Compression Rod Demand, F_c (lbs)

z/h	0.25				0.5				0.75				1			
S_{DS}	0.5	1	1.5	2	0.5	1	1.5	2	0.5	1	1.5	2	0.5	1	1.5	2
F_P	0.23	0.45	0.68	0.90	0.25	0.50	0.75	1.00	0.31	0.63	0.94	1.25	0.38	0.75	1.13	1.50
	27	54	81	108	29	58	87	116	34	69	103	137	40	79	119	158
	35	71	106	141	38	76	114	152	45	90	135	180	52	103	155	207
	54	107	161	214	58	115	173	231	68	136	204	272	78	157	235	313
	76	152	229	305	82	164	246	328	97	193	290	387	111	223	334	445
	104	208	312	416	112	224	336	448	132	264	396	528	152	304	456	608
	138	276	413	551	148	297	445	594	175	350	525	700	201	403	604	806
	169	339	508	677	182	365	547	729	215	430	644	859	247	495	742	990
	189	377	566	754	203	406	609	812	239	479	718	957	276	551	827	1102
	271	542	813	1084	292	584	876	1168	344	688	1032	1376	396	792	1188	1585
	337	673	1010	1347	363	725	1088	1450	427	855	1282	1709	492	984	1476	1968
	262	524	786	1048	282	564	846	1128	332	665	997	1330	383	766	1149	1531
	376	751	1127	1503	405	809	1214	1618	477	954	1431	1907	549	1098	1647	2196

Key (Reference Detail 4.1)		
Rod ø (in)	Fc Max	Lmax
3/8	440	14
1/2	739	20
5/8	1218	25
3/4	1766	31
NA	NA	NA

Reference Detail p2.1-3		
Maximum Brace Angle, θ_{max} =	60	degrees
Pipe ø	Weight	Spacing
(in.)	(plf)	(ft)
1.25	1.04	80
1.5	1.36	80
2	2.06	80
2.5	2.93	80
3	4	80
3.5	5.3	80
4	6.51	80
5	9.67	60
6	13.9	60
8	25.9	40
10	40.3	20
12	57.8	20

Table 3.4C – Copper Pipe type K with Gas - Compression Rod Demand, F_c (lbs)

z/h	0.25				0.5				0.75				1			
S_{DS}	0.5	1	1.5	2	0.5	1	1.5	2	0.5	1	1.5	2	0.5	1	1.5	2
F_P	0.23	0.45	0.68	0.90	0.25	0.50	0.75	1.00	0.31	0.63	0.94	1.25	0.38	0.75	1.13	1.50
	41	81	122	163	44	89	133	177	53	107	160	213	62	125	187	249
	53	107	160	213	58	116	174	232	70	140	209	279	82	163	245	326
	81	161	242	323	88	176	264	351	106	211	317	423	124	247	371	494
	115	230	344	459	125	250	375	500	150	301	451	601	176	351	527	703
	157	313	470	627	171	341	512	682	205	410	616	821	240	480	720	959
	208	415	623	831	226	452	678	904	272	544	816	1088	318	636	953	1271
	255	510	765	1020	278	555	833	1110	334	668	1002	1336	390	781	1171	1561
	284	568	852	1137	309	619	928	1237	372	744	1116	1488	435	870	1305	1739
	408	817	1225	1634	445	889	1334	1778	535	1070	1604	2139	625	1250	1875	2500
	507	1015	1522	2029	552	1104	1657	2209	664	1329	1993	2657	777	1553	2330	3106
	395	789	1184	1579	430	859	1289	1718	517	1034	1551	2067	604	1208	1812	2416
	566	1132	1698	2264	616	1232	1848	2465	741	1483	2224	2965	866	1733	2599	3466

Key (Reference Detail 4.1)		
Rod ø (in)	Fc Max	Lmax
3/8	440	14
1/2	739	20
5/8	1218	25
3/4	1766	31
NA	NA	NA

Assumed constants: a_p = 2.5 R_p = 6 I_p = 1.5

Notes:

1. For spacings other than those listed in the table, multiply T_{cable} table values by actual spacing/spacing in the table. Then use maximum LRFD Rated Strength in Key to determine Gripple fastener.
2. Gripple seismic kit is only approved for angles 30-60 degrees
3. Adequacy of pipe, duct, cable tray, etc to span between bracing shall be determined by the engineer of record.
4. "Spacing" provided does not consider the spacing required for gravity support. The scope of this OPM is limited to seismic bracing only.

Section 5 – Compression Rod Tables – Table 3.5 – Copper Pipe type K w/ Water & Insulation

Reference Detail p2.1-3

Maximum Brace Angle, θ_{max} = 30 degrees

Table 3.5A – Copper Pipe type K w/ Water & Insulation - Compression Rod Demand, F_c (lbs)

Pipe ø (in.)	Weight (plf)	Spacing (ft)	z/h = 0.25, S_{DS} = 0.5, F_P = 0.23	0.25, 1, 0.45	0.25, 1.5, 0.68	0.25, 2, 0.90	0.5, 0.5, 0.25	0.5, 1, 0.50	0.5, 1.5, 0.75	0.5, 2, 1.00	0.75, 0.5, 0.31	0.75, 1, 0.63	0.75, 1.5, 0.94	0.75, 2, 1.25	1, 0.5, 0.38	1, 1, 0.75	1, 1.5, 1.13	1, 2, 1.50
1.25	2.3	80	42	85	127	169	45	90	135	180	52	103	155	206	58	116	175	233
1.5	2.8	80	51	103	154	206	55	109	164	219	63	126	188	251	71	142	213	284
2	4.2	80	77	154	232	309	82	164	246	328	94	188	283	377	106	213	319	425
2.5	5.8	80	107	213	320	427	113	227	340	453	130	260	390	520	147	294	441	587
3	7.6	80	140	280	419	559	149	297	446	594	170	341	511	682	192	385	577	770
3.5	10	80	184	368	552	736	195	391	586	782	224	449	673	897	253	506	760	1013
4	12.4	60	171	342	513	684	182	364	545	727	209	417	626	835	235	471	706	942
5	18.6	60	257	513	770	1026	273	545	818	1091	313	626	939	1252	353	706	1060	1413
6	25.1	40	231	462	692	923	245	491	736	981	282	563	845	1126	318	636	953	1271
8	43.7	20	201	402	603	804	214	427	641	854	245	490	735	980	277	553	830	1107
10	66.9	20	308	615	923	1230	327	654	981	1308	375	750	1126	1501	423	847	1270	1694
12	91.8	20	422	844	1266	1688	449	897	1346	1794	515	1030	1545	2059	581	1162	1743	2324

Key (Reference Detail 4.1)

Rod ø (in)	Fc Max	Lmax
3/8	440	14
1/2	739	20
5/8	1218	25
3/4	1766	31
NA	NA	NA

Reference Detail p2.1-3

Maximum Brace Angle, θ_{max} = 45 degrees

Table 3.5B – Copper Pipe type K w/ Water & Insulation - Compression Rod Demand, F_c (lbs)

Pipe ø (in.)	Weight (plf)	Spacing (ft)	z/h = 0.25, S_{DS} = 0.5, F_P = 0.23	0.25, 1, 0.45	0.25, 1.5, 0.68	0.25, 2, 0.90	0.5, 0.5, 0.25	0.5, 1, 0.50	0.5, 1.5, 0.75	0.5, 2, 1.00	0.75, 0.5, 0.31	0.75, 1, 0.63	0.75, 1.5, 0.94	0.75, 2, 1.25	1, 0.5, 0.38	1, 1, 0.75	1, 1.5, 1.13	1, 2, 1.50
1.25	2.3	80	60	120	179	239	64	129	193	258	76	152	228	304	87	175	262	350
1.5	2.8	80	73	146	218	291	78	157	235	314	92	185	277	370	106	213	319	426
2	4.2	80	109	218	328	437	118	235	353	470	139	277	416	554	160	319	479	638
2.5	5.8	80	151	302	452	603	162	325	487	650	191	383	574	766	220	441	661	882
3	7.6	80	198	395	593	790	213	426	638	851	251	502	752	1003	289	578	866	1155
3.5	10	80	260	520	780	1040	280	560	840	1120	330	660	990	1320	380	760	1140	1520
4	12.4	60	242	484	725	967	260	521	781	1042	307	614	921	1228	353	707	1060	1414
5	18.6	40	242	484	725	967	260	521	781	1042	307	614	921	1228	353	707	1060	1414
6	25.1	20	163	326	489	653	176	351	527	703	207	414	621	828	238	477	715	954
8	43.7	20	284	568	852	1136	306	612	918	1224	361	721	1082	1442	415	830	1245	1661
10	66.9	10	217	435	652	870	234	468	702	937	276	552	828	1104	318	636	953	1271
12	91.8	10	298	597	895	1193	321	643	964	1285	379	757	1136	1515	436	872	1308	1744

Key (Reference Detail 4.1)

Rod ø (in)	Fc Max	Lmax
3/8	440	14
1/2	739	20
5/8	1218	25
3/4	1766	31
NA	NA	NA

Reference Detail p2.1-3

Maximum Brace Angle, θ_{max} = 60 degrees

Table 3.5C – Copper Pipe type K w/ Water & Insulation - Compression Rod Demand, F_c (lbs)

Pipe ø (in.)	Weight (plf)	Spacing (ft)	z/h = 0.25, S_{DS} = 0.5, F_P = 0.23	0.25, 1, 0.45	0.25, 1.5, 0.68	0.25, 2, 0.90	0.5, 0.5, 0.25	0.5, 1, 0.50	0.5, 1.5, 0.75	0.5, 2, 1.00	0.75, 0.5, 0.31	0.75, 1, 0.63	0.75, 1.5, 0.94	0.75, 2, 1.25	1, 0.5, 0.38	1, 1, 0.75	1, 1.5, 1.13	1, 2, 1.50
1.25	2.3	80	90	180	270	360	98	196	294	392	118	236	354	472	138	276	414	552
1.5	2.8	80	110	219	329	439	119	239	358	478	144	287	431	575	168	336	504	672
2	4.2	80	165	329	494	658	179	358	537	716	215	431	646	862	252	504	756	1007
2.5	5.8	80	227	454	682	909	247	495	742	989	298	595	893	1190	348	696	1043	1391
3	7.6	80	298	595	893	1191	324	648	972	1296	390	780	1170	1560	456	911	1367	1823
3.5	10	60	294	588	881	1175	320	640	959	1279	385	770	1154	1539	450	899	1349	1799
4	12.4	60	364	729	1093	1457	397	793	1190	1586	477	954	1431	1908	558	1115	1673	2231
5	18.6	40	364	729	1093	1457	397	793	1190	1586	477	954	1431	1908	558	1115	1673	2231
6	25.1	20	246	492	738	983	268	535	803	1070	322	644	966	1288	376	753	1129	1505
8	43.7	10	214	428	642	856	233	466	699	932	280	560	841	1121	328	655	983	1310
10	66.9	10	328	655	983	1310	357	713	1070	1426	429	858	1287	1716	501	1003	1504	2006
12	91.8	10	450	899	1349	1798	489	979	1468	1957	589	1177	1766	2355	688	1376	2064	2752

Key (Reference Detail 4.1)

Rod ø (in)	Fc Max	Lmax
3/8	440	14
1/2	739	20
5/8	1218	25
3/4	1766	31
NA	NA	NA

Assumed constants: a_p = 2.5 R_p = 6 I_p = 1.5

Notes:

1. For spacings other than those listed in the table, multiply T_{cable} table values by actual spacing/spacing in the table. Then use maximum LRFD Rated Strength in Key to determine Gripple fastener.
2. Gripple seismic kit is only approved for angles 30-60 degrees
3. Adequacy of pipe, duct, cable tray, etc to span between bracing shall be determined by the engineer of record.
4. "Spacing" provided does not consider the spacing required for gravity support. The scope of this OPM is limited to seismic bracing only.

Section 5 – Compression Rod Demand Tables – Table 3.6 – Round, Oval, or Rectangular Duct

Reference Detail p2.4-12

Maximum Brace Angle, θ_{max} = 30 degrees

Table 3.6A – Round, Oval, or Rectangular Duct - Compression Rod Demand, F_c (lbs)

Weight (plf)	Longitudinal Spacing (ft)	Transverse Spacing (ft)	z/h 0.25				0.5				0.75				1			
			S_{DS} 0.5	1	1.5	2	0.5	1	1.5	2	0.5	1	1.5	2	0.5	1	1.5	2
			F_P 0.23	0.45	0.68	0.90	0.25	0.50	0.75	1.00	0.31	0.63	0.94	1.25	0.38	0.75	1.13	1.50
10	40	20	46	92	138	184	49	98	147	195	56	112	168	224	63	127	190	253
20	40	20	92	184	276	368	98	195	293	391	112	224	337	449	127	253	380	506
30	40	20	138	276	414	552	147	293	440	586	168	337	505	673	190	380	570	760
40	40	20	184	368	552	736	195	391	586	782	224	449	673	897	253	506	760	1013
50	40	20	230	460	690	920	244	489	733	977	280	561	841	1122	317	633	950	1266
60	20	10	138	276	414	552	147	293	440	586	168	337	505	673	190	380	570	760
70	20	10	161	322	483	644	171	342	513	684	196	393	589	785	222	443	665	886
80	20	10	184	368	552	736	195	391	586	782	224	449	673	897	253	506	760	1013
90	20	10	207	414	621	828	220	440	660	880	252	505	757	1010	285	570	855	1139
100	20	10	230	460	690	920	244	489	733	977	280	561	841	1122	317	633	950	1266

Key (Reference Detail 4.1)

Rod ø (in)	Fc Max	Lmax
3/8	440	14
1/2	739	20
5/8	1218	25
3/4	1766	31
NA	NA	NA

Reference Detail p2.4-12

Maximum Brace Angle, θ_{max} = 45 degrees

Table 3.6B – Round, Oval, or Rectangular Duct - Compression Rod Demand, F_c (lbs)

Weight (plf)	Longitudinal Spacing (ft)	Transverse Spacing (ft)	z/h 0.25				0.5				0.75				1			
			S_{DS} 0.5	1	1.5	2	0.5	1	1.5	2	0.5	1	1.5	2	0.5	1	1.5	2
			F_P 0.23	0.45	0.68	0.90	0.25	0.50	0.75	1.00	0.31	0.63	0.94	1.25	0.38	0.75	1.13	1.50
10	40	20	65	130	195	260	70	140	210	280	83	165	248	330	95	190	285	380
20	40	20	130	260	390	520	140	280	420	560	165	330	495	660	190	380	570	760
30	40	20	195	390	585	780	210	420	630	840	248	495	743	990	285	570	855	1140
40	40	20	260	520	780	1040	280	560	840	1120	330	660	990	1320	380	760	1140	1520
50	40	20	325	650	975	1300	350	700	1050	1400	413	825	1238	1650	475	950	1425	1900
60	20	10	195	390	585	780	210	420	630	840	248	495	743	990	285	570	855	1140
70	20	10	228	455	683	910	245	490	735	980	289	578	866	1155	333	665	998	1330
80	20	10	260	520	780	1040	280	560	840	1120	330	660	990	1320	380	760	1140	1520
90	20	10	293	585	878	1170	315	630	945	1260	371	743	1114	1485	428	855	1283	1710
100	20	10	325	650	975	1300	350	700	1050	1400	413	825	1238	1650	475	950	1425	1900

Key (Reference Detail 4.1)

Rod ø (in)	Fc Max	Lmax
3/8	440	14
1/2	739	20
5/8	1218	25
3/4	1766	31
NA	NA	NA

Reference Detail p2.4-12

Maximum Brace Angle, θ_{max} = 60 degrees

Table 3.6C – Round, Oval, or Rectangular Duct - Compression Rod Demand, F_c (lbs)

Weight (plf)	Longitudinal Spacing (ft)	Transverse Spacing (ft)	z/h 0.25				0.5				0.75				1			
			S_{DS} 0.5	1	1.5	2	0.5	1	1.5	2	0.5	1	1.5	2	0.5	1	1.5	2
			F_P 0.23	0.45	0.68	0.90	0.25	0.50	0.75	1.00	0.31	0.63	0.94	1.25	0.38	0.75	1.13	1.50
10	40	20	98	196	294	392	107	213	320	426	128	257	385	513	150	300	450	600
20	40	20	196	392	588	784	213	426	640	853	257	513	770	1026	300	600	899	1199
30	40	20	294	588	881	1175	320	640	959	1279	385	770	1154	1539	450	899	1349	1799
40	40	20	392	784	1175	1567	426	853	1279	1706	513	1026	1539	2052	600	1199	1799	2398
50	40	20	490	979	1469	1959	533	1066	1599	2132	641	1283	1924	2565	750	1499	2249	2998
60	20	10	294	588	881	1175	320	640	959	1279	385	770	1154	1539	450	899	1349	1799
70	20	10	343	686	1028	1371	373	746	1119	1492	449	898	1347	1796	525	1049	1574	2099
80	20	10	392	784	1175	1567	426	853	1279	1706	513	1026	1539	2052	600	1199	1799	2398
90	20	10	441	881	1322	1763	480	959	1439	1919	577	1154	1731	2309	675	1349	2024	2698
100	20	10	490	979	1469	1959	533	1066	1599	2132	641	1283	1924	2565	750	1499	2249	2998

Key (Reference Detail 4.1)

Rod ø (in)	Fc Max	Lmax
3/8	440	14
1/2	739	20
5/8	1218	25
3/4	1766	31
NA	NA	NA

Assumed constants: a_p = 2.5 R_p = 6 I_p = 1.5

Notes:

1. For spacings other than those listed in the table, multiply T_{cable} table values by actual spacing/spacing in the table. Then use maximum LRFD Rated Strength in Key to determine Gripple fastener.
2. Gripple seismic kit is only approved for angles 30-60 degrees
3. Adequacy of pipe, duct, cable tray, etc to span between bracing shall be determined by the engineer of record.
4. "Spacing" provided does not consider the spacing required for gravity support. The scope of this OPM is limited to seismic bracing only.

Section 5 – Compression Rod Demand Tables – Table 3.7 – Trapeze or Cable Tray

Reference Detail p2.13-15, 2.17-21

Maximum Brace Angle, θ_{max} = 30 degrees

Table 3.7A – Trapeze or Cable Tray - Compression Rod Demand, F_c (lbs)

Weight (plf)	Longitudinal Spacing (ft)	Transverse Spacing (ft)	z/h 0.25				0.5				0.75				1			
			S_{DS} 0.5	1	1.5	2	0.5	1	1.5	2	0.5	1	1.5	2	0.5	1	1.5	2
			F_P 0.23	0.45	0.68	0.90	0.25	0.50	0.75	1.00	0.31	0.63	0.94	1.25	0.38	0.75	1.13	1.50
10	40	20	46	92	138	184	49	98	147	195	56	112	168	224	63	127	190	253
20	40	20	92	184	276	368	98	195	293	391	112	224	337	449	127	253	380	506
30	40	20	138	276	414	552	147	293	440	586	168	337	505	673	190	380	570	760
40	40	20	184	368	552	736	195	391	586	782	224	449	673	897	253	506	760	1013
45	40	20	207	414	621	828	220	440	660	880	252	505	757	1010	285	570	855	1139
50	20	10	115	230	345	460	122	244	367	489	140	280	421	561	158	317	475	633
60	20	10	138	276	414	552	147	293	440	586	168	337	505	673	190	380	570	760
70	20	10	161	322	483	644	171	342	513	684	196	393	589	785	222	443	665	886
80	20	10	184	368	552	736	195	391	586	782	224	449	673	897	253	506	760	1013
85	20	10	195	391	586	782	208	415	623	831	238	477	715	953	269	538	807	1076

Key (Reference Detail 4.1)

Rod ø (in)	Fc Max	Lmax
3/8	440	14
1/2	739	20
5/8	1218	25
3/4	1766	31
NA	NA	NA

Reference Detail p2.13-15, 2.17-21

Maximum Brace Angle, θ_{max} = 45 degrees

Table 3.7B – Trapeze or Cable Tray - Compression Rod Demand, F_c (lbs)

Weight (plf)	Longitudinal Spacing (ft)	Transverse Spacing (ft)	z/h 0.25				0.5				0.75				1			
			S_{DS} 0.5	1	1.5	2	0.5	1	1.5	2	0.5	1	1.5	2	0.5	1	1.5	2
			F_P 0.23	0.45	0.68	0.90	0.25	0.50	0.75	1.00	0.31	0.63	0.94	1.25	0.38	0.75	1.13	1.50
10	40	20	65	130	195	260	70	140	210	280	83	165	248	330	95	190	285	380
20	40	20	130	260	390	520	140	280	420	560	165	330	495	660	190	380	570	760
30	40	20	195	390	585	780	210	420	630	840	248	495	743	990	285	570	855	1140
40	40	20	260	520	780	1040	280	560	840	1120	330	660	990	1320	380	760	1140	1520
45	40	20	293	585	878	1170	315	630	945	1260	371	743	1114	1485	428	855	1283	1710
50	20	10	163	325	488	650	175	350	525	700	206	413	619	825	238	475	713	950
60	20	10	195	390	585	780	210	420	630	840	248	495	743	990	285	570	855	1140
70	20	10	228	455	683	910	245	490	735	980	289	578	866	1155	333	665	998	1330
80	20	10	260	520	780	1040	280	560	840	1120	330	660	990	1320	380	760	1140	1520
85	20	10	276	553	829	1105	298	595	893	1190	351	701	1052	1403	404	808	1211	1615

Key (Reference Detail 4.1)

Rod ø (in)	Fc Max	Lmax
3/8	440	14
1/2	739	20
5/8	1218	25
3/4	1766	31
NA	NA	NA

Reference Detail p2.13-15, 2.17-21

Maximum Brace Angle, θ_{max} = 60 degrees

Table 3.7C – Trapeze or Cable Tray - Compression Rod Demand, F_c (lbs)

Weight (plf)	Longitudinal Spacing (ft)	Transverse Spacing (ft)	z/h 0.25				0.5				0.75				1			
			S_{DS} 0.5	1	1.5	2	0.5	1	1.5	2	0.5	1	1.5	2	0.5	1	1.5	2
			F_P 0.23	0.45	0.68	0.90	0.25	0.50	0.75	1.00	0.31	0.63	0.94	1.25	0.38	0.75	1.13	1.50
10	40	20	98	196	294	392	107	213	320	426	128	257	385	513	150	300	450	600
20	40	20	196	392	588	784	213	426	640	853	257	513	770	1026	300	600	899	1199
30	40	20	294	588	881	1175	320	640	959	1279	385	770	1154	1539	450	899	1349	1799
40	40	20	392	784	1175	1567	426	853	1279	1706	513	1026	1539	2052	600	1199	1799	2398
45	40	20	441	881	1322	1763	480	959	1439	1919	577	1154	1731	2309	675	1349	2024	2698
50	20	10	245	490	735	979	267	533	800	1066	321	641	962	1283	375	750	1124	1499
60	20	10	294	588	881	1175	320	640	959	1279	385	770	1154	1539	450	899	1349	1799
70	20	10	343	686	1028	1371	373	746	1119	1492	449	898	1347	1796	525	1049	1574	2099
80	20	10	392	784	1175	1567	426	853	1279	1706	513	1026	1539	2052	600	1199	1799	2398
85	20	10	416	833	1249	1665	453	906	1359	1812	545	1090	1635	2180	637	1274	1911	2548

Key (Reference Detail 4.1)

Rod ø (in)	Fc Max	Lmax
3/8	440	14
1/2	739	20
5/8	1218	25
3/4	1766	31
NA	NA	NA

Assumed constants: a_p = 2.5 R_p = 6 I_p = 1.5

Notes:

1. For spacings other than those listed in the table, multiply T_{cable} table values by actual spacing/spacing in the table. Then use maximum LRFD Rated Strength in Key to determine Gripple fastener.
2. Gripple seismic kit is only approved for angles 30-60 degrees
3. Adequacy of pipe, duct, cable tray, etc to span between bracing shall be determined by the engineer of record.
4. "Spacing" provided does not consider the spacing required for gravity support. The scope of this OPM is limited to seismic bracing only.

Section 5 – Compression Rod Demand Tables – Table 3.8 – Single Hung Conduit

Reference Detail p2.22-2.23		
Maximum Brace Angle, θ_{max} =	30	degrees
Pipe ø	Max Weight	Spacing
(in.)	(plf)	(ft)
3	12.6	60
3.5	16	60
4	19.67	40
5	28.8	40
6	40	20

Table 3.8A – Single Hung Conduit - Compression Rod Demand, F_c (lbs)

z/h	0.25				0.5				0.75				1			
S_{DS}	0.5	1	1.5	2	0.5	1	1.5	2	0.5	1	1.5	2	0.5	1	1.5	2
F_P	0.23	0.45	0.68	0.90	0.25	0.50	0.75	1.00	0.31	0.63	0.94	1.25	0.38	0.75	1.13	1.50
	174	348	521	695	185	369	554	739	212	424	636	848	239	479	718	957
	221	441	662	883	235	469	704	938	269	538	808	1077	304	608	912	1215
	181	362	543	724	192	384	577	769	221	441	662	883	249	498	747	996
	265	530	795	1059	281	563	844	1126	323	646	969	1292	365	729	1094	1458
	184	368	552	736	195	391	586	782	224	449	673	897	253	506	760	1013

Key (Reference Detail 4.1)		
Rod ø (in)	Fc Max	Lmax
3/8	440	14
1/2	739	20
5/8	1218	25
3/4	1766	31
NA	NA	NA

Reference Detail p2.22-2.23		
Maximum Brace Angle, θ_{max} =	45	degrees
Pipe ø	Max Weight	Spacing
(in.)	(plf)	(ft)
3	12.6	60
3.5	16	40
4	19.67	40
5	28.8	20
6	40	20

Table 3.8B – Single Hung Conduit - Compression Rod Demand, F_c (lbs)

z/h	0.25				0.5				0.75				1			
S_{DS}	0.5	1	1.5	2	0.5	1	1.5	2	0.5	1	1.5	2	0.5	1	1.5	2
F_P	0.23	0.45	0.68	0.90	0.25	0.50	0.75	1.00	0.31	0.63	0.94	1.25	0.38	0.75	1.13	1.50
	246	491	737	983	265	529	794	1058	312	624	936	1247	359	718	1077	1436
	208	416	624	832	224	448	672	896	264	528	792	1056	304	608	912	1216
	256	511	767	1023	275	551	826	1102	325	649	974	1298	374	747	1121	1495
	187	374	562	749	202	403	605	806	238	475	713	950	274	547	821	1094
	260	520	780	1040	280	560	840	1120	330	660	990	1320	380	760	1140	1520

Key (Reference Detail 4.1)		
Rod ø (in)	Fc Max	Lmax
3/8	440	14
1/2	739	20
5/8	1218	25
3/4	1766	31
NA	NA	NA

Reference Detail p2.22-2.23		
Maximum Brace Angle, θ_{max} =	60	degrees
Pipe ø	Max Weight	Spacing
(in.)	(plf)	(ft)
3	12.6	60
3.5	16	40
4	19.67	40
5	28.8	20
6	40	20

Table 3.8C – Single Hung Conduit - Compression Rod Demand, F_c (lbs)

z/h	0.25				0.5				0.75				1			
S_{DS}	0.5	1	1.5	2	0.5	1	1.5	2	0.5	1	1.5	2	0.5	1	1.5	2
F_P	0.23	0.45	0.68	0.90	0.25	0.50	0.75	1.00	0.31	0.63	0.94	1.25	0.38	0.75	1.13	1.50
	370	740	1111	1481	403	806	1209	1612	485	970	1454	1939	567	1133	1700	2267
	313	627	940	1254	341	682	1023	1365	410	821	1231	1642	480	959	1439	1919
	385	771	1156	1541	419	839	1258	1677	505	1009	1514	2018	590	1179	1769	2359
	282	564	846	1128	307	614	921	1228	369	739	1108	1477	432	863	1295	1727
	392	784	1175	1567	426	853	1279	1706	513	1026	1539	2052	600	1199	1799	2398

Key (Reference Detail 4.1)		
Rod ø (in)	Fc Max	Lmax
3/8	440	14
1/2	739	20
5/8	1218	25
3/4	1766	31
NA	NA	NA

Assumed constants: a_p = 2.5 R_p = 6 I_p = 1.5

DATE: 07/19/2025

Notes:

1. For spacings other than those listed in the table, multiply T_{cable} table values by actual spacing/spacing in the table. Then use maximum LRFD Rated Strength in Key to determine Gripple fastener.
2. Gripple seismic kit is only approved for angles 30-60 degrees
3. Adequacy of pipe, duct, cable tray, etc to span between bracing shall be determined by the engineer of record.
4. "Spacing" provided does not consider the spacing required for gravity support. The scope of this OPM is limited to seismic bracing only.

Section 5 – Compression Rod Attachment Tables – Table 4.1 – Steel Pipe w/ Water & Insulation

Reference Details p 3.21-27

Maximum Brace Angle, θ_{max} = 30 degrees

Table 4.1A - Steel Pipe w/ Water & Insulation - Rod Attachment Designation

Pipe ø (in.)	Weight (plf)	Spacing (ft)	z/h	0.25				0.5				0.75				1			
			S_{DS}	0.5	1	1.5	2	0.5	1	1.5	2.5	0.5	1	1.5	2	0.5	1	1.5	2
			F_P	0.23	0.45	0.68	0.90	0.25	0.50	0.75	1.25	0.31	0.63	0.94	1.25	0.38	0.75	1.13	1.50
1.25	3.6	80		R2	R2	R2	R2	R2	R2	R2	R2	R2	R2	R2	R2	R2	R2	R2	R2
1.5	4.3	80		R2	R2	R2	R2	R2	R2	R2	R2	R2	R2	R2	R2	R2	R2	R2	R2
2	6	80		R2	R2	R2	R2	R2	R2	R2	R2	R2	R2	R2	R2	R2	R2	R2	R2
2.5	8.8	80		R3	R3	R3	R3	R3	R3	R3	R3	R3	R3	R3	R3	R3	R3	R3	R3
3	11.9	80		R4	R4	R4	R4	R4	R4	R4	R4	R4	R4	R4	R4	R4	R4	R4	R4
3.5	14.6	80		R4	R4	R4	R4	R4	R4	R4	R4	R4	R4	R4	R4	R4	R4	R4	R4
4	17.6	80		R5	R5	R5	R5	R5	R5	R5	R5	R5	R5	R5	R5	R5	R5	R5	R5
5	24.8	60		R5	R5	R5	R5	R5	R5	R5	R5	R5	R5	R5	R5	R5	R5	R5	R5
6	33.3	60		R6	R6	R6	R6	R6	R6	R6	R6	R6	R6	R6	R6	R6	R6	R6	R6
8	52.5	40		R7	R7	R7	R7	R7	R7	R7	R7	R7	R7	R7	R7	R7	R7	R7	R7
10	77.4	20		R5	R5	R5	R5	R5	R5	R5	R5	R5	R5	R5	R5	R5	R5	R5	R5
12	101.7	20		R6	R6	R6	R6	R6	R6	R6	R6	R6	R6	R6	R6	R6	R6	R6	R6

Key

Ta Max (lbs)	
-	R0
300	R1
600	R2
1000	R3
1500	R4
2000	R5
2500	R6
3000	R7

Reference Details p 3.21-27

Maximum Brace Angle, θ_{max} = 45 degrees

Table 4.1B - Steel Pipe w/ Water & Insulation - Rod Attachment Designation

Pipe ø (in.)	Weight (plf)	Spacing (ft)	z/h	0.25				0.5				0.75				1			
			S_{DS}	0.5	1	1.5	2	0.5	1	1.5	2.5	0.5	1	1.5	2	0.5	1	1.5	2
			F_P	0.23	0.45	0.68	0.90	0.25	0.50	0.75	1.25	0.31	0.63	0.94	1.25	0.38	0.75	1.13	1.50
1.25	3.6	80		R2	R2	R2	R2	R2	R2	R2	R2	R2	R2	R2	R2	R2	R2	R2	R2
1.5	4.3	80		R2	R2	R2	R2	R2	R2	R2	R2	R2	R2	R2	R2	R2	R2	R2	R2
2	6	80		R2	R2	R2	R2	R2	R2	R2	R2	R2	R2	R2	R2	R2	R2	R2	R2
2.5	8.8	80		R3	R3	R3	R3	R3	R3	R3	R3	R3	R3	R3	R3	R3	R3	R3	R3
3	11.9	80		R4	R4	R4	R4	R4	R4	R4	R4	R4	R4	R4	R4	R4	R4	R4	R4
3.5	14.6	80		R4	R4	R4	R4	R4	R4	R4	R4	R4	R4	R4	R4	R4	R4	R4	R4
4	17.6	80		R5	R5	R5	R5	R5	R5	R5	R5	R5	R5	R5	R5	R5	R5	R5	R5
5	24.8	60		R5	R5	R5	R5	R5	R5	R5	R5	R5	R5	R5	R5	R5	R5	R5	R5
6	33.3	40		R5	R5	R5	R5	R5	R5	R5	R5	R5	R5	R5	R5	R5	R5	R5	R5
8	52.5	20		R4	R4	R4	R4	R4	R4	R4	R4	R4	R4	R4	R4	R4	R4	R4	R4
10	77.4	20		R5	R5	R5	R5	R5	R5	R5	R5	R5	R5	R5	R5	R5	R5	R5	R5
12	101.7	20		R6	R6	R6	R6	R6	R6	R6	R6	R6	R6	R6	R6	R6	R6	R6	R6

Reference Details p 3.21-27

Maximum Brace Angle, θ_{max} = 60 degrees

Table 4.1C - Steel Pipe w/ Water & Insulation - Rod Attachment Designation

Pipe ø (in.)	Weight (plf)	Spacing (ft)	z/h	0.25				0.5				0.75				1			
			S_{DS}	0.5	1	1.5	2	0.5	1	1.5	2.5	0.5	1	1.5	2	0.5	1	1.5	2
			F_P	0.23	0.45	0.68	0.90	0.25	0.50	0.75	1.25	0.31	0.63	0.94	1.25	0.38	0.75	1.13	1.50
1.25	3.6	80		R2	R2	R2	R2	R2	R2	R2	R2	R2	R2	R2	R2	R2	R2	R2	R2
1.5	4.3	80		R2	R2	R2	R2	R2	R2	R2	R2	R2	R2	R2	R2	R2	R2	R2	R2
2	6	80		R2	R2	R2	R2	R2	R2	R2	R2	R2	R2	R2	R2	R2	R2	R2	R2
2.5	8.8	80		R3	R3	R3	R3	R3	R3	R3	R3	R3	R3	R3	R3	R3	R3	R3	R3
3	11.9	80		R4	R4	R4	R4	R4	R4	R4	R4	R4	R4	R4	R4	R4	R4	R4	R4
3.5	14.6	80		R4	R4	R4	R4	R4	R4	R4	R4	R4	R4	R4	R4	R4	R4	R4	R4
4	17.6	60		R4	R4	R4	R4	R4	R4	R4	R4	R4	R4	R4	R4	R4	R4	R4	R4
5	24.8	40		R4	R4	R4	R4	R4	R4	R4	R4	R4	R4	R4	R4	R4	R4	R4	R4
6	33.3	40		R5	R5	R5	R5	R5	R5	R5	R5	R5	R5	R5	R5	R5	R5	R5	R5
8	52.5	20		R4	R4	R4	R4	R4	R4	R4	R4	R4	R4	R4	R4	R4	R4	R4	R4
10	77.4	20		R5	R5	R5	R5	R5	R5	R5	R5	R5	R5	R5	R5	R5	R5	R5	R5
12	101.7	10		R4	R4	R4	R4	R4	R4	R4	R4	R4	R4	R4	R4	R4	R4	R4	R4

Assumed constants: a_p = 2.5 R_p = 6 I_p = 1.5

Notes:

1. For spacings other than those listed in the table, multiply T_{cable} table values by actual spacing/spacing in the table. Then use maximum LRFD Rated Strength in Key to determine Gripple fastener.
2. Gripple seismic kit is only approved for angles 30-60 degrees
3. Adequacy of pipe, duct, cable tray, etc to span between bracing shall be determined by the engineer of record.
4. "Spacing" provided does not consider the spacing required for gravity support. The scope of this OPM is limited to seismic bracing only.

Section 5 – Compression Rod Attachment Tables – Table 4.2 – Cast Iron Pipe w/ Water & Insulation

Reference Details p 3.21-27

Maximum Brace Angle, θ_{max} = 30 degrees

Table 4.2A – Cast Iron Pipe w/ Water & Insulation - Rod Attachment Designation

Pipe ø (in.)	Weight (plf)	Spacing (ft)	z/h: 0.25				0.5				0.75				1			
			S_{DS} 0.5	1	1.5	2	0.5	1	1.5	2	0.5	1	1.5	2	0.5	1	1.5	2
			F_P 0.23	0.45	0.68	0.90	0.25	0.50	0.75	1.00	0.31	0.63	0.94	1.25	0.38	0.75	1.13	1.50
3	8.4	12	R1	R1	R1	R1	R1	R1	R1	R1	R1	R1	R1	R1	R1	R1	R1	R1
4	13	14	R1	R1	R1	R1	R1	R1	R1	R1	R1	R1	R1	R1	R1	R1	R1	R1
5	18	16	R2	R2	R2	R2	R2	R2	R2	R2	R2	R2	R2	R2	R2	R2	R2	R2
6	23.4	17	R2	R2	R2	R2	R2	R2	R2	R2	R2	R2	R2	R2	R2	R2	R2	R2
8	40.2	19	R3	R3	R3	R3	R3	R3	R3	R3	R3	R3	R3	R3	R3	R3	R3	R3
10	60.8	22	R5	R5	R5	R5	R5	R5	R5	R5	R5	R5	R5	R5	R5	R5	R5	R5
12	82.1	23	R6	R6	R6	R6	R6	R6	R6	R6	R6	R6	R6	R6	R6	R6	R6	R6

Key

Ta Max (lbs)	
-	R0
300	R1
600	R2
1000	R3
1500	R4
2000	R5
2500	R6
3000	R7

Reference Details p 3.21-27

Maximum Brace Angle, θ_{max} = 45 degrees

Table 4.2B – Cast Iron Pipe w/ Water & Insulation - Rod Attachment Designation

Pipe ø (in.)	Weight (plf)	Spacing (ft)	z/h: 0.25				0.5				0.75				1			
			S_{DS} 0.5	1	1.5	2	0.5	1	1.5	2	0.5	1	1.5	2	0.5	1	1.5	2
			F_P 0.23	0.45	0.68	0.90	0.25	0.50	0.75	1.00	0.31	0.63	0.94	1.25	0.38	0.75	1.13	1.50
3	8.4	12	R1	R1	R1	R1	R1	R1	R1	R1	R1	R1	R1	R1	R1	R1	R1	R1
4	13	14	R1	R1	R1	R1	R1	R1	R1	R1	R1	R1	R1	R1	R1	R1	R1	R1
5	18	16	R2	R2	R2	R2	R2	R2	R2	R2	R2	R2	R2	R2	R2	R2	R2	R2
6	23.4	17	R2	R2	R2	R2	R2	R2	R2	R2	R2	R2	R2	R2	R2	R2	R2	R2
8	40.2	19	R3	R3	R3	R3	R3	R3	R3	R3	R3	R3	R3	R3	R3	R3	R3	R3
10	60.8	22	R5	R5	R5	R5	R5	R5	R5	R5	R5	R5	R5	R5	R5	R5	R5	R5
12	82.1	23	R6	R6	R6	R6	R6	R6	R6	R6	R6	R6	R6	R6	R6	R6	R6	R6

Reference Details p 3.21-27

Maximum Brace Angle, θ_{max} = 60 degrees

Table 4.2C – Cast Iron Pipe w/ Water & Insulation - Rod Attachment Designation

Pipe ø (in.)	Weight (plf)	Spacing (ft)	z/h: 0.25				0.5				0.75				1			
			S_{DS} 0.5	1	1.5	2	0.5	1	1.5	2	0.5	1	1.5	2	0.5	1	1.5	2
			F_P 0.23	0.45	0.68	0.90	0.25	0.50	0.75	1.00	0.31	0.63	0.94	1.25	0.38	0.75	1.13	1.50
3	8.4	12	R1	R1	R1	R1	R1	R1	R1	R1	R1	R1	R1	R1	R1	R1	R1	R1
4	13	14	R1	R1	R1	R1	R1	R1	R1	R1	R1	R1	R1	R1	R1	R1	R1	R1
5	18	16	R2	R2	R2	R2	R2	R2	R2	R2	R2	R2	R2	R2	R2	R2	R2	R2
6	23.4	17	R2	R2	R2	R2	R2	R2	R2	R2	R2	R2	R2	R2	R2	R2	R2	R2
8	40.2	19	R3	R3	R3	R3	R3	R3	R3	R3	R3	R3	R3	R3	R3	R3	R3	R3
10	60.8	22	R5	R5	R5	R5	R5	R5	R5	R5	R5	R5	R5	R5	R5	R5	R5	R5
12	82.1	23	R6	R6	R6	R6	R6	R6	R6	R6	R6	R6	R6	R6	R6	R6	R6	R6

Assumed constants: a_p = 2.5 6 I_p = 1.5

Notes:

1. For spacings other than those listed in the table, multiply T_{cable} table values by actual spacing/spacing in the table. Then use maximum LRFD Rated Strength in Key to determine Gripple fastener.
2. Gripple seismic kit is only approved for angles 30-60 degrees
3. Adequacy of pipe, duct, cable tray, etc to span between bracing shall be determined by the engineer of record.
4. "Spacing" provided does not consider the spacing required for gravity support. The scope of this OPM is limited to seismic bracing only.

Section 5 – Compression Rod Attachment Tables – Table 4.3 – PVC Pipe w/ Water & Insulation

Reference Details p 3.21-27

Maximum Brace Angle, θ_{max} = 30 degrees

Table 4.3A - PVC Pipe w/ Water & Insulation - Rod Attachment Designation

Pipe ø (in.)	Weight (plf)	Spacing (ft)	z/h	0.25				0.5				0.75				1			
			S_{DS}	0.5	1	1.5	2	0.5	1	1.5	2.5	0.5	1	1.5	2	0.5	1	1.5	2
			F_P	0.23	0.45	0.68	0.90	0.25	0.50	0.75	1.25	0.31	0.63	0.94	1.25	0.38	0.75	1.13	1.50
1.25	1.1	7		R1	R1	R1	R1	R1	R1	R1	R1	R1	R1	R1	R1	R1	R1	R1	R1
1.5	1.5	9		R1	R1	R1	R1	R1	R1	R1	R1	R1	R1	R1	R1	R1	R1	R1	R1
2	2.1	10		R1	R1	R1	R1	R1	R1	R1	R1	R1	R1	R1	R1	R1	R1	R1	R1
2.5	3.3	11		R1	R1	R1	R1	R1	R1	R1	R1	R1	R1	R1	R1	R1	R1	R1	R1
3	4.8	12		R1	R1	R1	R1	R1	R1	R1	R1	R1	R1	R1	R1	R1	R1	R1	R1
3.5	7.8	13		R1	R1	R1	R1	R1	R1	R1	R1	R1	R1	R1	R1	R1	R1	R1	R1
4	11.7	14		R1	R1	R1	R1	R1	R1	R1	R1	R1	R1	R1	R1	R1	R1	R1	R1
5	16.5	16		R2	R2	R2	R2	R2	R2	R2	R2	R2	R2	R2	R2	R2	R2	R2	R2
6	27.5	17		R2	R2	R2	R2	R2	R2	R2	R2	R2	R2	R2	R2	R2	R2	R2	R2
8	42.5	19		R3	R3	R3	R3	R3	R3	R3	R3	R3	R3	R3	R3	R3	R3	R3	R3
10	59.7	22		R5	R5	R5	R5	R5	R5	R5	R5	R5	R5	R5	R5	R5	R5	R5	R5
12	71.8	23		R5	R5	R5	R5	R5	R5	R5	R5	R5	R5	R5	R5	R5	R5	R5	R5

Key

Ta Max (lbs)	
-	R0
300	R1
600	R2
1000	R3
1500	R4
2000	R5
2500	R6
3000	R7

Reference Details p 3.21-27

Maximum Brace Angle, θ_{max} = 45 degrees

Table 4.3B - PVC Pipe w/ Water & Insulation - Rod Attachment Designation

Pipe ø (in.)	Weight (plf)	Spacing (ft)	z/h	0.25				0.5				0.75				1			
			S_{DS}	0.5	1	1.5	2	0.5	1	1.5	2.5	0.5	1	1.5	2	0.5	1	1.5	2
			F_P	0.23	0.45	0.68	0.90	0.25	0.50	0.75	1.25	0.31	0.63	0.94	1.25	0.38	0.75	1.13	1.50
1.25	1.1	7		R1	R1	R1	R1	R1	R1	R1	R1	R1	R1	R1	R1	R1	R1	R1	R1
1.5	1.5	9		R1	R1	R1	R1	R1	R1	R1	R1	R1	R1	R1	R1	R1	R1	R1	R1
2	2.1	10		R1	R1	R1	R1	R1	R1	R1	R1	R1	R1	R1	R1	R1	R1	R1	R1
2.5	3.3	11		R1	R1	R1	R1	R1	R1	R1	R1	R1	R1	R1	R1	R1	R1	R1	R1
3	4.8	12		R1	R1	R1	R1	R1	R1	R1	R1	R1	R1	R1	R1	R1	R1	R1	R1
3.5	7.8	13		R1	R1	R1	R1	R1	R1	R1	R1	R1	R1	R1	R1	R1	R1	R1	R1
4	11.7	14		R1	R1	R1	R1	R1	R1	R1	R1	R1	R1	R1	R1	R1	R1	R1	R1
5	16.5	16		R2	R2	R2	R2	R2	R2	R2	R2	R2	R2	R2	R2	R2	R2	R2	R2
6	27.5	17		R2	R2	R2	R2	R2	R2	R2	R2	R2	R2	R2	R2	R2	R2	R2	R2
8	42.5	19		R3	R3	R3	R3	R3	R3	R3	R3	R3	R3	R3	R3	R3	R3	R3	R3
10	59.7	22		R5	R5	R5	R5	R5	R5	R5	R5	R5	R5	R5	R5	R5	R5	R5	R5
12	71.8	23		R5	R5	R5	R5	R5	R5	R5	R5	R5	R5	R5	R5	R5	R5	R5	R5

Reference Details p 3.21-27

Maximum Brace Angle, θ_{max} = 60 degrees

Table 4.3C - PVC Pipe w/ Water & Insulation - Rod Attachment Designation

Pipe ø (in.)	Weight (plf)	Spacing (ft)	z/h	0.25				0.5				0.75				1			
			S_{DS}	0.5	1	1.5	2	0.5	1	1.5	2.5	0.5	1	1.5	2	0.5	1	1.5	2
			F_P	0.23	0.45	0.68	0.90	0.25	0.50	0.75	1.25	0.31	0.63	0.94	1.25	0.38	0.75	1.13	1.50
1.25	1.1	7		R1	R1	R1	R1	R1	R1	R1	R1	R1	R1	R1	R1	R1	R1	R1	R1
1.5	1.5	9		R1	R1	R1	R1	R1	R1	R1	R1	R1	R1	R1	R1	R1	R1	R1	R1
2	2.1	10		R1	R1	R1	R1	R1	R1	R1	R1	R1	R1	R1	R1	R1	R1	R1	R1
2.5	3.3	11		R1	R1	R1	R1	R1	R1	R1	R1	R1	R1	R1	R1	R1	R1	R1	R1
3	4.8	12		R1	R1	R1	R1	R1	R1	R1	R1	R1	R1	R1	R1	R1	R1	R1	R1
3.5	7.8	13		R1	R1	R1	R1	R1	R1	R1	R1	R1	R1	R1	R1	R1	R1	R1	R1
4	11.7	14		R1	R1	R1	R1	R1	R1	R1	R1	R1	R1	R1	R1	R1	R1	R1	R1
5	16.5	16		R2	R2	R2	R2	R2	R2	R2	R2	R2	R2	R2	R2	R2	R2	R2	R2
6	27.5	17		R2	R2	R2	R2	R2	R2	R2	R2	R2	R2	R2	R2	R2	R2	R2	R2

Notes:

1. For spacings other than those listed in the table, multiply T_{cable} table values by actual spacing/spacing in the table. Then use maximum LRFD Rated Strength in Key to determine Gripple fastener.
2. Gripple seismic kit is only approved for angles 30-60 degrees
3. Adequacy of pipe, duct, cable tray, etc to span between bracing shall be determined by the engineer of record.
4. "Spacing" provided does not consider the spacing required for gravity support. The scope of this OPM is limited to seismic bracing only.

Section 5 – Compression Rod Attachment Tables – Table 4.4 – Copper Pipe type K with Gas

Reference Details p 3.21-27

Maximum Brace Angle, θ_{max} = 30 degrees

Table 4.4A – Copper Pipe type K with Gas - Rod Attachment Designation

Pipe ø (in.)	Weight (plf)	Spacing (ft)	z/h 0.25				0.5				0.75				1			
			S_{DS} 0.5	1	1.5	2	0.5	1	1.5	2	0.5	1	1.5	2	0.5	1	1.5	2
			F_P 0.23	0.45	0.68	0.90	0.25	0.50	0.75	1.00	0.31	0.63	0.94	1.25	0.38	0.75	1.13	1.50
1.25	1.04	80	R1	R1	R1	R1	R1	R1	R1	R1	R1	R1	R1	R1	R1	R1	R1	R1
1.5	1.36	80	R1	R1	R1	R1	R1	R1	R1	R1	R1	R1	R1	R1	R1	R1	R1	R1
2	2.06	80	R1	R1	R1	R1	R1	R1	R1	R1	R1	R1	R1	R1	R1	R1	R1	R1
2.5	2.93	80	R1	R1	R1	R1	R1	R1	R1	R1	R1	R1	R1	R1	R1	R1	R1	R1
3	4	80	R2	R2	R2	R2	R2	R2	R2	R2	R2	R2	R2	R2	R2	R2	R2	R2
3.5	5.3	80	R2	R2	R2	R2	R2	R2	R2	R2	R2	R2	R2	R2	R2	R2	R2	R2
4	6.51	80	R3	R3	R3	R3	R3	R3	R3	R3	R3	R3	R3	R3	R3	R3	R3	R3
5	9.67	60	R3	R3	R3	R3	R3	R3	R3	R3	R3	R3	R3	R3	R3	R3	R3	R3
6	13.9	60	R4	R4	R4	R4	R4	R4	R4	R4	R4	R4	R4	R4	R4	R4	R4	R4
8	25.9	40	R4	R4	R4	R4	R4	R4	R4	R4	R4	R4	R4	R4	R4	R4	R4	R4
10	40.3	20	R3	R3	R3	R3	R3	R3	R3	R3	R3	R3	R3	R3	R3	R3	R3	R3
12	57.8	20	R4	R4	R4	R4	R4	R4	R4	R4	R4	R4	R4	R4	R4	R4	R4	R4

Key

Ta Max (lbs)	
-	R0
300	R1
600	R2
1000	R3
1500	R4
2000	R5
2500	R6
3000	R7

Reference Details p 3.21-27

Maximum Brace Angle, θ_{max} = 45 degrees

Table 4.4B – Copper Pipe type K with Gas - Rod Attachment Designation

Pipe ø (in.)	Weight (plf)	Spacing (ft)	z/h 0.25				0.5				0.75				1			
			S_{DS} 0.5	1	1.5	2	0.5	1	1.5	2	0.5	1	1.5	2	0.5	1	1.5	2
			F_P 0.23	0.45	0.68	0.90	0.25	0.50	0.75	1.00	0.31	0.63	0.94	1.25	0.38	0.75	1.13	1.50
1.25	1.04	80	R1	R1	R1	R1	R1	R1	R1	R1	R1	R1	R1	R1	R1	R1	R1	R1
1.5	1.36	80	R1	R1	R1	R1	R1	R1	R1	R1	R1	R1	R1	R1	R1	R1	R1	R1
2	2.06	80	R1	R1	R1	R1	R1	R1	R1	R1	R1	R1	R1	R1	R1	R1	R1	R1
2.5	2.93	80	R1	R1	R1	R1	R1	R1	R1	R1	R1	R1	R1	R1	R1	R1	R1	R1
3	4	80	R2	R2	R2	R2	R2	R2	R2	R2	R2	R2	R2	R2	R2	R2	R2	R2
3.5	5.3	80	R2	R2	R2	R2	R2	R2	R2	R2	R2	R2	R2	R2	R2	R2	R2	R2
4	6.51	80	R3	R3	R3	R3	R3	R3	R3	R3	R3	R3	R3	R3	R3	R3	R3	R3
5	9.67	60	R3	R3	R3	R3	R3	R3	R3	R3	R3	R3	R3	R3	R3	R3	R3	R3
6	13.9	60	R4	R4	R4	R4	R4	R4	R4	R4	R4	R4	R4	R4	R4	R4	R4	R4
8	25.9	40	R4	R4	R4	R4	R4	R4	R4	R4	R4	R4	R4	R4	R4	R4	R4	R4
10	40.3	20	R3	R3	R3	R3	R3	R3	R3	R3	R3	R3	R3	R3	R3	R3	R3	R3
12	57.8	20	R4	R4	R4	R4	R4	R4	R4	R4	R4	R4	R4	R4	R4	R4	R4	R4

Reference Details p 3.21-27

Maximum Brace Angle, θ_{max} = 60 degrees

Table 4.4C – Copper Pipe type K with Gas - Rod Attachment Designation

Pipe ø (in.)	Weight (plf)	Spacing (ft)	z/h 0.25				0.5				0.75				1			
			S_{DS} 0.5	1	1.5	2	0.5	1	1.5	2	0.5	1	1.5	2	0.5	1	1.5	2
			F_P 0.23	0.45	0.68	0.90	0.25	0.50	0.75	1.00	0.31	0.63	0.94	1.25	0.38	0.75	1.13	1.50
1.25	1.04	80	R1	R1	R1	R1	R1	R1	R1	R1	R1	R1	R1	R1	R1	R1	R1	R1
1.5	1.36	80	R1	R1	R1	R1	R1	R1	R1	R1	R1	R1	R1	R1	R1	R1	R1	R1
2	2.06	80	R1	R1	R1	R1	R1	R1	R1	R1	R1	R1	R1	R1	R1	R1	R1	R1
2.5	2.93	80	R1	R1	R1	R1	R1	R1	R1	R1	R1	R1	R1	R1	R1	R1	R1	R1
3	4	80	R2	R2	R2	R2	R2	R2	R2	R2	R2	R2	R2	R2	R2	R2	R2	R2
3.5	5.3	80	R2	R2	R2	R2	R2	R2	R2	R2	R2	R2	R2	R2	R2	R2	R2	R2
4	6.51	80	R3	R3	R3	R3	R3	R3	R3	R3	R3	R3	R3	R3	R3	R3	R3	R3
5	9.67	60	R3	R3	R3	R3	R3	R3	R3	R3	R3	R3	R3	R3	R3	R3	R3	R3
6	13.9	60	R4	R4	R4	R4	R4	R4	R4	R4	R4	R4	R4	R4	R4	R4	R4	R4
8	25.9	40	R4	R4	R4	R4	R4	R4	R4	R4	R4	R4	R4	R4	R4	R4	R4	R4
10	40.3	20	R3	R3	R3	R3	R3	R3	R3	R3	R3	R3	R3	R3	R3	R3	R3	R3
12	57.8	20	R4	R4	R4	R4	R4	R4	R4	R4	R4	R4	R4	R4	R4	R4	R4	R4

Assumed constants: a_p = 2.5 R_p = 6 I_p = 1.5

Notes:

1. For spacings other than those listed in the table, multiply T_{cable} table values by actual spacing/spacing in the table. Then use maximum LRFD Rated Strength in Key to determine Gripple fastener.
2. Gripple seismic kit is only approved for angles 30-60 degrees
3. Adequacy of pipe, duct, cable tray, etc to span between bracing shall be determined by the engineer of record.
4. "Spacing" provided does not consider the spacing required for gravity support. The scope of this OPM is limited to seismic bracing only.

OPM-0709 CODE COMPLIANCE BUILDING CODE, 2022

Section 5 – Compression Rod Attachment Tables – Table 4.5 – Copper Pipe type K w/ Water & Insulation

Reference Details p 3.21-27

Maximum Brace Angle, θ_{max} = 30 degrees

Table 4.5A – Copper Pipe type K w/ Water & Insulation - Rod Attachment Designation

Pipe ø (in.)	Weight (plf)	Spacing (ft)	z/h = 0.25, S_{DS} = 0.5, F_P = 0.23	0.25, 1, 0.45	0.25, 1.5, 0.68	0.25, 2, 0.90	0.5, 0.5, 0.25	0.5, 1, 0.50	0.5, 1.5, 0.75	0.5, 2, 1.00	0.75, 0.5, 0.31	0.75, 1, 0.63	0.75, 1.5, 0.94	0.75, 2, 1.25	1, 0.5, 0.38	1, 1, 0.75	1, 1.5, 1.13	1, 2, 1.50
1.25	2.3	80	R1	R1	R1	R1	R1	R1	R1	R1	R1	R1	R1	R1	R1	R1	R1	R1
1.5	2.8	80	R1	R1	R1	R1	R1	R1	R1	R1	R1	R1	R1	R1	R1	R1	R1	R1
2	4.2	80	R2	R2	R2	R2	R2	R2	R2	R2	R2	R2	R2	R2	R2	R2	R2	R2
2.5	5.8	80	R2	R2	R2	R2	R2	R2	R2	R2	R2	R2	R2	R2	R2	R2	R2	R2
3	7.6	80	R3	R3	R3	R3	R3	R3	R3	R3	R3	R3	R3	R3	R3	R3	R3	R3
3.5	10	80	R3	R3	R3	R3	R3	R3	R3	R3	R3	R3	R3	R3	R3	R3	R3	R3
4	12.4	60	R3	R3	R3	R3	R3	R3	R3	R3	R3	R3	R3	R3	R3	R3	R3	R3
5	18.6	60	R4	R4	R4	R4	R4	R4	R4	R4	R4	R4	R4	R4	R4	R4	R4	R4
6	25.1	40	R4	R4	R4	R4	R4	R4	R4	R4	R4	R4	R4	R4	R4	R4	R4	R4
8	43.7	20	R4	R4	R4	R4	R4	R4	R4	R4	R4	R4	R4	R4	R4	R4	R4	R4
10	66.9	20	R5	R5	R5	R5	R5	R5	R5	R5	R5	R5	R5	R5	R5	R5	R5	R5
12	91.8	20	R6	R6	R6	R6	R6	R6	R6	R6	R6	R6	R6	R6	R6	R6	R6	R6

Key

Ta Max (lbs)	
-	R0
300	R1
600	R2
1000	R3
1500	R4
2000	R5
2500	R6
3000	R7

Reference Details p 3.21-27

Maximum Brace Angle, θ_{max} = 45 degrees

Table 4.5B – Copper Pipe type K w/ Water & Insulation - Rod Attachment Designation

Pipe ø (in.)	Weight (plf)	Spacing (ft)	z/h = 0.25, S_{DS} = 0.5, F_P = 0.23	0.25, 1, 0.45	0.25, 1.5, 0.68	0.25, 2, 0.90	0.5, 0.5, 0.25	0.5, 1, 0.50	0.5, 1.5, 0.75	0.5, 2, 1.00	0.75, 0.5, 0.31	0.75, 1, 0.63	0.75, 1.5, 0.94	0.75, 2, 1.25	1, 0.5, 0.38	1, 1, 0.75	1, 1.5, 1.13	1, 2, 1.50
1.25	2.3	80	R1	R1	R1	R1	R1	R1	R1	R1	R1	R1	R1	R1	R1	R1	R1	R1
1.5	2.8	80	R1	R1	R1	R1	R1	R1	R1	R1	R1	R1	R1	R1	R1	R1	R1	R1
2	4.2	80	R2	R2	R2	R2	R2	R2	R2	R2	R2	R2	R2	R2	R2	R2	R2	R2
2.5	5.8	80	R2	R2	R2	R2	R2	R2	R2	R2	R2	R2	R2	R2	R2	R2	R2	R2
3	7.6	80	R3	R3	R3	R3	R3	R3	R3	R3	R3	R3	R3	R3	R3	R3	R3	R3
3.5	10	80	R3	R3	R3	R3	R3	R3	R3	R3	R3	R3	R3	R3	R3	R3	R3	R3
4	12.4	60	R3	R3	R3	R3	R3	R3	R3	R3	R3	R3	R3	R3	R3	R3	R3	R3
5	18.6	40	R3	R3	R3	R3	R3	R3	R3	R3	R3	R3	R3	R3	R3	R3	R3	R3
6	25.1	20	R3	R3	R3	R3	R3	R3	R3	R3	R3	R3	R3	R3	R3	R3	R3	R3
8	43.7	20	R4	R4	R4	R4	R4	R4	R4	R4	R4	R4	R4	R4	R4	R4	R4	R4
10	66.9	10	R3	R3	R3	R3	R3	R3	R3	R3	R3	R3	R3	R3	R3	R3	R3	R3
12	91.8	10	R4	R4	R4	R4	R4	R4	R4	R4	R4	R4	R4	R4	R4	R4	R4	R4

Reference Details p 3.21-27

Maximum Brace Angle, θ_{max} = 60 degrees

Table 4.5C – Copper Pipe type K w/ Water & Insulation - Rod Attachment Designation

Pipe ø (in.)	Weight (plf)	Spacing (ft)	z/h = 0.25, S_{DS} = 0.5, F_P = 0.23	0.25, 1, 0.45	0.25, 1.5, 0.68	0.25, 2, 0.90	0.5, 0.5, 0.25	0.5, 1, 0.50	0.5, 1.5, 0.75	0.5, 2, 1.00	0.75, 0.5, 0.31	0.75, 1, 0.63	0.75, 1.5, 0.94	0.75, 2, 1.25	1, 0.5, 0.38	1, 1, 0.75	1, 1.5, 1.13	1, 2, 1.50
1.25	2.3	80	R1	R1	R1	R1	R1	R1	R1	R1	R1	R1	R1	R1	R1	R1	R1	R1
1.5	2.8	80	R1	R1	R1	R1	R1	R1	R1	R1	R1	R1	R1	R1	R1	R1	R1	R1
2	4.2	80	R2	R2	R2	R2	R2	R2	R2	R2	R2	R2	R2	R2	R2	R2	R2	R2
2.5	5.8	80	R2	R2	R2	R2	R2	R2	R2	R2	R2	R2	R2	R2	R2	R2	R2	R2
3	7.6	80	R3	R3	R3	R3	R3	R3	R3	R3	R3	R3	R3	R3	R3	R3	R3	R3
3.5	10	60	R3	R3	R3	R3	R3	R3	R3	R3	R3	R3	R3	R3	R3	R3	R3	R3
4	12.4	60	R3	R3	R3	R3	R3	R3	R3	R3	R3	R3	R3	R3	R3	R3	R3	R3
5	18.6	40	R3	R3	R3	R3	R3	R3	R3	R3	R3	R3	R3	R3	R3	R3	R3	R3
6	25.1	20	R3	R3	R3	R3	R3	R3	R3	R3	R3	R3	R3	R3	R3	R3	R3	R3
8	43.7	10	R2	R2	R2	R2	R2	R2	R2	R2	R2	R2	R2	R2	R2	R2	R2	R2
10	66.9	10	R3	R3	R3	R3	R3	R3	R3	R3	R3	R3	R3	R3	R3	R3	R3	R3
12	91.8	10	R4	R4	R4	R4	R4	R4	R4	R4	R4	R4	R4	R4	R4	R4	R4	R4

Assumed constants: a_p = 2.5 R_p = 6 I_p = 1.5

Notes:

1. For spacings other than those listed in the table, multiply T_{cable} table values by actual spacing/spacing in the table. Then use maximum LRFD Rated Strength in Key to determine Gripple fastener.
2. Gripple seismic kit is only approved for angles 30-60 degrees
3. Adequacy of pipe, duct, cable tray, etc to span between bracing shall be determined by the engineer of record.
4. "Spacing" provided does not consider the spacing required for gravity support. The scope of this OPM is limited to seismic bracing only.

Section 5 – Compression Rod Attachment Tables – Table 4.6 – Round, Oval, or Rectangular Duct

Reference Details p 3.21-27		
Maximum Brace Angle, θ_{max} =	30	degrees
Weight	Longitudinal Spacing	Transverse Spacing
(plf)	(ft)	(ft)
10	40	20
20	40	20
30	40	20
40	40	20
50	40	20
60	20	10
70	20	10
80	20	10
90	20	10
100	20	10

Table 4.6A – Round, Oval, or Rectangular Duct - Rod Attachment Designation

z/h	0.25				0.5				0.75				1			
S_{DS}	0.5	1	1.5	2	0.5	1	1.5	2	0.5	1	1.5	2	0.5	1	1.5	2
F_P	0.23	0.45	0.68	0.90	0.25	0.50	0.75	1.00	0.31	0.63	0.94	1.25	0.38	0.75	1.13	1.50
	R1	R1	R1	R1	R1	R1	R1	R1	R1	R1	R1	R1	R1	R1	R1	R1
	R2	R2	R2	R2	R2	R2	R2	R2	R2	R2	R2	R2	R2	R2	R2	R2
	R3	R3	R3	R3	R3	R3	R3	R3	R3	R3	R3	R3	R3	R3	R3	R3
	R3	R3	R3	R3	R3	R3	R3	R3	R3	R3	R3	R3	R3	R3	R3	R3
	R4	R4	R4	R4	R4	R4	R4	R4	R4	R4	R4	R4	R4	R4	R4	R4
	R3	R3	R3	R3	R3	R3	R3	R3	R3	R3	R3	R3	R3	R3	R3	R3
	R3	R3	R3	R3	R3	R3	R3	R3	R3	R3	R3	R3	R3	R3	R3	R3
	R3	R3	R3	R3	R3	R3	R3	R3	R3	R3	R3	R3	R3	R3	R3	R3
	R4	R4	R4	R4	R4	R4	R4	R4	R4	R4	R4	R4	R4	R4	R4	R4
	R4	R4	R4	R4	R4	R4	R4	R4	R4	R4	R4	R4	R4	R4	R4	R4

Key	
Ta Max	
(lbs)	
-	R0
300	R1
600	R2
1000	R3
1500	R4
2000	R5
2500	R6
3000	R7

Reference Details p 3.21-27		
Maximum Brace Angle, θ_{max} =	45	degrees
Weight	Longitudinal Spacing	Transverse Spacing
(plf)	(ft)	(ft)
10	40	20
20	40	20
30	40	20
40	40	20
50	40	20
60	20	10
70	20	10
80	20	10
90	20	10
100	20	10

Table 4.6B – Round, Oval, or Rectangular Duct - Rod Attachment Designation

z/h	0.25				0.5				0.75				1			
S_{DS}	0.5	1	1.5	2	0.5	1	1.5	2	0.5	1	1.5	2	0.5	1	1.5	2
F_P	0.23	0.45	0.68	0.90	0.25	0.50	0.75	1.00	0.31	0.63	0.94	1.25	0.38	0.75	1.13	1.50
	R1	R1	R1	R1	R1	R1	R1	R1	R1	R1	R1	R1	R1	R1	R1	R1
	R2	R2	R2	R2	R2	R2	R2	R2	R2	R2	R2	R2	R2	R2	R2	R2
	R3	R3	R3	R3	R3	R3	R3	R3	R3	R3	R3	R3	R3	R3	R3	R3
	R3	R3	R3	R3	R3	R3	R3	R3	R3	R3	R3	R3	R3	R3	R3	R3
	R4	R4	R4	R4	R4	R4	R4	R4	R4	R4	R4	R4	R4	R4	R4	R4
	R3	R3	R3	R3	R3	R3	R3	R3	R3	R3	R3	R3	R3	R3	R3	R3
	R3	R3	R3	R3	R3	R3	R3	R3	R3	R3	R3	R3	R3	R3	R3	R3
	R3	R3	R3	R3	R3	R3	R3	R3	R3	R3	R3	R3	R3	R3	R3	R3
	R4	R4	R4	R4	R4	R4	R4	R4	R4	R4	R4	R4	R4	R4	R4	R4
	R4	R4	R4	R4	R4	R4	R4	R4	R4	R4	R4	R4	R4	R4	R4	R4

Reference Details p 3.21-27		
Maximum Brace Angle, θ_{max} =	60	degrees
Weight	Longitudinal Spacing	Transverse Spacing
(plf)	(ft)	(ft)
10	40	20
20	40	20
30	40	20
40	40	20
50	40	20
60	20	10
70	20	10
80	20	10
90	20	10
100	20	10

Table 4.6C – Round, Oval, or Rectangular Duct - Rod Attachment Designation

z/h	0.25				0.5				0.75				1			
S_{DS}	0.5	1	1.5	2	0.5	1	1.5	2	0.5	1	1.5	2	0.5	1	1.5	2
F_P	0.23	0.45	0.68	0.90	0.25	0.50	0.75	1.00	0.31	0.63	0.94	1.25	0.38	0.75	1.13	1.50
	R1	R1	R1	R1	R1	R1	R1	R1	R1	R1	R1	R1	R1	R1	R1	R1
	R2	R2	R2	R2	R2	R2	R2	R2	R2	R2	R2	R2	R2	R2	R2	R2
	R3	R3	R3	R3	R3	R3	R3	R3	R3	R3	R3	R3	R3	R3	R3	R3
	R3	R3	R3	R3	R3	R3	R3	R3	R3	R3	R3	R3	R3	R3	R3	R3
	R4	R4	R4	R4	R4	R4	R4	R4	R4	R4	R4	R4	R4	R4	R4	R4
	R3	R3	R3	R3	R3	R3	R3	R3	R3	R3	R3	R3	R3	R3	R3	R3
	R3	R3	R3	R3	R3	R3	R3	R3	R3	R3	R3	R3	R3	R3	R3	R3
	R3	R3	R3	R3	R3	R3	R3	R3	R3	R3	R3	R3	R3	R3	R3	R3
	R4	R4	R4	R4	R4	R4	R4	R4	R4	R4	R4	R4	R4	R4	R4	R4
	R4	R4	R4	R4	R4	R4	R4	R4	R4	R4	R4	R4	R4	R4	R4	R4

Assumed constants: a_p = 2.5 R_p = 6 I_p = 1.5

Notes:

1. For spacings other than those listed in the table, multiply T_{cable} table values by actual spacing/spacing in the table. Then use maximum LRFD Rated Strength in Key to determine Gripple fastener.
2. Gripple seismic kit is only approved for angles 30-60 degrees
3. Adequacy of pipe, duct, cable tray, etc to span between bracing shall be determined by the engineer of record.
4. "Spacing" provided does not consider the spacing required for gravity support. The scope of this OPM is limited to seismic bracing only.

Section 5 – Compression Rod Attachment Tables – Table 4.7 – Trapeze or Cable Tray

Reference Details p 3.21-27		
Maximum Brace Angle, θ_{max} =	30	degrees
Weight	Longitudinal Spacing	Transverse Spacing
(plf)	(ft)	(ft)
10	40	20
20	40	20
30	40	20
40	40	20
45	40	20
50	20	10
60	20	10
70	20	10
80	20	10
85	20	10

Table 4.7A – Trapeze or Cable Tray - Rod Attachment Designation

z/h	0.25				0.5				0.75				1			
S_{DS}	0.5	1	1.5	2	0.5	1	1.5	2	0.5	1	1.5	2	0.5	1	1.5	2
F_P	0.23	0.45	0.68	0.90	0.25	0.50	0.75	1.00	0.31	0.63	0.94	1.25	0.38	0.75	1.13	1.50
	R1	R1	R1	R1	R1	R1	R1	R1	R1	R1	R1	R1	R1	R1	R1	R1
	R2	R2	R2	R2	R2	R2	R2	R2	R2	R2	R2	R2	R2	R2	R2	R2
	R3	R3	R3	R3	R3	R3	R3	R3	R3	R3	R3	R3	R3	R3	R3	R3
	R3	R3	R3	R3	R3	R3	R3	R3	R3	R3	R3	R3	R3	R3	R3	R3
	R4	R4	R4	R4	R4	R4	R4	R4	R4	R4	R4	R4	R4	R4	R4	R4
	R3	R3	R3	R3	R3	R3	R3	R3	R3	R3	R3	R3	R3	R3	R3	R3
	R3	R3	R3	R3	R3	R3	R3	R3	R3	R3	R3	R3	R3	R3	R3	R3
	R3	R3	R3	R3	R3	R3	R3	R3	R3	R3	R3	R3	R3	R3	R3	R3
	R3	R3	R3	R3	R3	R3	R3	R3	R3	R3	R3	R3	R3	R3	R3	R3
	R4	R4	R4	R4	R4	R4	R4	R4	R4	R4	R4	R4	R4	R4	R4	R4

Key	
Ta Max	
(lbs)	
-	R0
300	R1
600	R2
1000	R3
1500	R4
2000	R5
2500	R6
3000	R7

Reference Details p 3.21-27		
Maximum Brace Angle, θ_{max} =	45	degrees
Weight	Longitudinal Spacing	Transverse Spacing
(plf)	(ft)	(ft)
10	40	20
20	40	20
30	40	20
40	40	20
45	40	20
50	20	10
60	20	10
70	20	10
80	20	10
85	20	10

Table 4.7B – Trapeze or Cable Tray - Rod Attachment Designation

z/h	0.25				0.5				0.75				1			
S_{DS}	0.5	1	1.5	2	0.5	1	1.5	2	0.5	1	1.5	2	0.5	1	1.5	2
F_P	0.23	0.45	0.68	0.90	0.25	0.50	0.75	1.00	0.31	0.63	0.94	1.25	0.38	0.75	1.13	1.50
	R1	R1	R1	R1	R1	R1	R1	R1	R1	R1	R1	R1	R1	R1	R1	R1
	R2	R2	R2	R2	R2	R2	R2	R2	R2	R2	R2	R2	R2	R2	R2	R2
	R3	R3	R3	R3	R3	R3	R3	R3	R3	R3	R3	R3	R3	R3	R3	R3
	R3	R3	R3	R3	R3	R3	R3	R3	R3	R3	R3	R3	R3	R3	R3	R3
	R4	R4	R4	R4	R4	R4	R4	R4	R4	R4	R4	R4	R4	R4	R4	R4
	R3	R3	R3	R3	R3	R3	R3	R3	R3	R3	R3	R3	R3	R3	R3	R3
	R3	R3	R3	R3	R3	R3	R3	R3	R3	R3	R3	R3	R3	R3	R3	R3
	R3	R3	R3	R3	R3	R3	R3	R3	R3	R3	R3	R3	R3	R3	R3	R3
	R3	R3	R3	R3	R3	R3	R3	R3	R3	R3	R3	R3	R3	R3	R3	R3
	R4	R4	R4	R4	R4	R4	R4	R4	R4	R4	R4	R4	R4	R4	R4	R4

Reference Details p 3.21-27		
Maximum Brace Angle, θ_{max} =	60	degrees
Weight	Longitudinal Spacing	Transverse Spacing
(plf)	(ft)	(ft)
10	40	20
20	40	20
30	40	20
40	40	20
45	40	20
50	20	10
60	20	10
70	20	10
80	20	10
85	20	10

Table 4.7C – Trapeze or Cable Tray - Rod Attachment Designation

z/h	0.25				0.5				0.75				1			
S_{DS}	0.5	1	1.5	2	0.5	1	1.5	2	0.5	1	1.5	2	0.5	1	1.5	2
F_P	0.23	0.45	0.68	0.90	0.25	0.50	0.75	1.00	0.31	0.63	0.94	1.25	0.38	0.75	1.13	1.50
	R1	R1	R1	R1	R1	R1	R1	R1	R1	R1	R1	R1	R1	R1	R1	R1
	R2	R2	R2	R2	R2	R2	R2	R2	R2	R2	R2	R2	R2	R2	R2	R2
	R3	R3	R3	R3	R3	R3	R3	R3	R3	R3	R3	R3	R3	R3	R3	R3
	R3	R3	R3	R3	R3	R3	R3	R3	R3	R3	R3	R3	R3	R3	R3	R3
	R4	R4	R4	R4	R4	R4	R4	R4	R4	R4	R4	R4	R4	R4	R4	R4
	R3	R3	R3	R3	R3	R3	R3	R3	R3	R3	R3	R3	R3	R3	R3	R3
	R3	R3	R3	R3	R3	R3	R3	R3	R3	R3	R3	R3	R3	R3	R3	R3
	R3	R3	R3	R3	R3	R3	R3	R3	R3	R3	R3	R3	R3	R3	R3	R3
	R3	R3	R3	R3	R3	R3	R3	R3	R3	R3	R3	R3	R3	R3	R3	R3
	R4	R4	R4	R4	R4	R4	R4	R4	R4	R4	R4	R4	R4	R4	R4	R4

Assumed constants: a_p = 2.5 R_p = 6 I_p = 1.5

Notes:

1. For spacings other than those listed in the table, multiply T_{cable} table values by actual spacing/spacing in the table. Then use maximum LRFD Rated Strength in Key to determine Gripple fastener.
2. Gripple seismic kit is only approved for angles 30-60 degrees
3. Adequacy of pipe, duct, cable tray, etc to span between bracing shall be determined by the engineer of record.
4. "Spacing" provided does not consider the spacing required for gravity support. The scope of this OPM is limited to seismic bracing only.

Section 5 – Compression Rod Attachment Tables – Table 4.8 – Single Hung Conduit

Reference Details p 3.21-27		
Maximum Brace Angle, θ_{max} =	30	degrees
Pipe ø	Max Weight	Spacing
(in.)	(plf)	(ft)
3	12.6	60
3.5	16	60
4	19.67	40
5	28.8	40
6	40	20

Table 4.8A – Single Hung Conduit - Rod Attachment Designation

z/h	0.25				0.5				0.75				1			
S_{DS}	0.5	1	1.5	2	0.5	1	1.5	2	0.5	1	1.5	2	0.5	1	1.5	2
F_P	0.23	0.45	0.68	0.90	0.25	0.50	0.75	1.00	0.31	0.63	0.94	1.25	0.38	0.75	1.13	1.50
	R3	R3	R3	R3	R3	R3	R3	R3	R3	R3	R3	R3	R3	R3	R3	R3
	R4	R4	R4	R4	R4	R4	R4	R4	R4	R4	R4	R4	R4	R4	R4	R4
	R3	R3	R3	R3	R3	R3	R3	R3	R3	R3	R3	R3	R3	R3	R3	R3
	R4	R4	R4	R4	R4	R4	R4	R4	R4	R4	R4	R4	R4	R4	R4	R4
	R3	R3	R3	R3	R3	R3	R3	R3	R3	R3	R3	R3	R3	R3	R3	R3

Key	
Ta Max	
(lbs)	
-	R0
300	R1
600	R2
1000	R3
1500	R4
2000	R5
2500	R6
3000	R7

Reference Details p 3.21-27		
Maximum Brace Angle, θ_{max} =	45	degrees
Pipe ø	Max Weight	Spacing
(in.)	(plf)	(ft)
3	12.6	60
3.5	16	40
4	19.67	40
5	28.8	20
6	40	20

Table 4.8B – Single Hung Conduit - Rod Attachment Designation

z/h	0.25				0.5				0.75				1			
S_{DS}	0.5	1	1.5	2	0.5	1	1.5	2	0.5	1	1.5	2	0.5	1	1.5	2
F_P	0.23	0.45	0.68	0.90	0.25	0.50	0.75	1.00	0.31	0.63	0.94	1.25	0.38	0.75	1.13	1.50
	R3	R3	R3	R3	R3	R3	R3	R3	R3	R3	R3	R3	R3	R3	R3	R3
	R3	R3	R3	R3	R3	R3	R3	R3	R3	R3	R3	R3	R3	R3	R3	R3
	R3	R3	R3	R3	R3	R3	R3	R3	R3	R3	R3	R3	R3	R3	R3	R3
	R3	R3	R3	R3	R3	R3	R3	R3	R3	R3	R3	R3	R3	R3	R3	R3
	R3	R3	R3	R3	R3	R3	R3	R3	R3	R3	R3	R3	R3	R3	R3	R3

Reference Details p 3.21-27		
Maximum Brace Angle, θ_{max} =	60	degrees
Pipe ø	Max Weight	Spacing
(in.)	(plf)	(ft)
3	12.6	60
3.5	16	40
4	19.67	40
5	28.8	20
6	40	20

Table 4.8C – Single Hung Conduit - Rod Attachment Designation

z/h	0.25				0.5				0.75				1			
S_{DS}	0.5	1	1.5	2	0.5	1	1.5	2	0.5	1	1.5	2	0.5	1	1.5	2
F_P	0.23	0.45	0.68	0.90	0.25	0.50	0.75	1.00	0.31	0.63	0.94	1.25	0.38	0.75	1.13	1.50
	R3	R3	R3	R3	R3	R3	R3	R3	R3	R3	R3	R3	R3	R3	R3	R3
	R3	R3	R3	R3	R3	R3	R3	R3	R3	R3	R3	R3	R3	R3	R3	R3
	R3	R3	R3	R3	R3	R3	R3	R3	R3	R3	R3	R3	R3	R3	R3	R3
	R3	R3	R3	R3	R3	R3	R3	R3	R3	R3	R3	R3	R3	R3	R3	R3
	R3	R3	R3	R3	R3	R3	R3	R3	R3	R3	R3	R3	R3	R3	R3	R3

Assumed constants: a_p = 2.5 R_p = 6 I_p = 1.5

DATE: 07/19/2025

Notes:

1. For spacings other than those listed in the table, multiply T_{cable} table values by actual spacing/spacing in the table. Then use maximum LRFD Rated Strength in Key to determine Gripple fastener.
2. Gripple seismic kit is only approved for angles 30-60 degrees
3. Adequacy of pipe, duct, cable tray, etc to span between bracing shall be determined by the engineer of record.
4. "Spacing" provided does not consider the spacing required for gravity support. The scope of this OPM is limited to seismic bracing only.