DEPARTMENT OF HEALTH CARE ACCESS AND INFORMATION
FACILITIES DEVELOPMENT DIVISION

APPLICATION FOR HCAI PREAPPROVAL OF MANUFACTURER'S CERTIFICATION (OPM)

OFFICE USE ONLY

APPLICATION #: OPM-0403

HCAI Preapproval of Manufacturer's Certification (OPM)

Type: ☐ New ☒ Renewal/Update

Manufacturer Information

Manufacturer: ISAT

Manufacturer's Technical Representative: Deep Shah

Mailing Address: 14848 Northam Street, La Mirada, CA 90638

Telephone: (877) 999-4728 Email: dshah@isatsb.com

Product Information

Product Name: ISAT FOR DISTRIBUTION SYSTEM SUPPORTS AND ATTACHMENTS

Product Type: Seismic Restraint Guidelines For Suspended MEP Distributed Systems

Product Model Number: BC-5, TZ2, PIPM38, LRD, Series 2500 2PC Strut Clamps

General Description: Seismic Restraint Hardware For Suspended MEP Distributed Systems

REVIEWED FOR CODE COMPLIANCE
HCAi
OPM-0403
BY: William Staehlin
DATE: 01-26-2024
CALIFORNIA BUILDING CODE, 2022

Applicant Information

Applicant Company Name: ISAT

Contact Person: Deep Shah

Mailing Address: 14848 Northam Street, La Mirada, CA 90638

Telephone: (877) 999-4728 Email: dshah@isatsb.com

Title: Director of Engineering (Corporate)

DEPARTMENT OF HEALTH CARE ACCESS AND INFORMATION
FACILITIES DEVELOPMENT DIVISION

Registered Design Professonal Preparing Engineering Recommendations

Company Name: ISAT

Name: MARCIN WASAZNIK California License Number: S6612

Mailing Address: 14848 Northam Street, La Mirada, CA 90638

Telephone: (714) 880-3007 Email: mwasaznik@isatsb.com

HCAI Special Seismic Certification Preapproval (OSP)

☐ Special Seismic Certification is preapproved under OSP OSP Number:

Certification Method

Testing in accordance with: ☐ ICC-ES AC156 ☐ FM 1950-16

☒ Other(s) (Please Specify): FM 1950-10

*Use of criteria other than those adopted by the California Building Standards Code, 2019 (CBSC 2019) for component supports and attachments are not permitted. For distribution system, interior partition wall, and suspended ceiling seismic bracings, test criteria other than those adopted in the CBSC 2019 may be used when approved by HCAI prior to testing.

☐ Analysis

☐ Experience Data

☒ Combination of Testing, Analysis, and/or Experience Data (Please Specify): Calculations based on national standards

REVIEWED FOR CODE COMPLIANCE
HCAI
OPM-0403
BY: William Staehlin
DATE: 01-26-2024
CALIFORNIA BUILDING CODE, 2022

HCAI Approval

Date: 1/26/2024

Name: William Staehlin Title: Senior Structural Engineer

Condition of Approval (if applicable):

TOTAL SUPPORT

Innovation • Engineering • BIM • Fabrication

A Division of Tomarco Contractor Specialties

REVIEWED FOR CODE COMPLIANCE
OPM-0403
BY: William Staehlin
DATE: 01-26-2024
CALIFORNIA BUILDING CODE 2022

OSHPD PRE-APPROVAL OF MANUFACTURER CERTIFICATION

OPM-0403-19 MANUAL

Version 3.0

SEISMIC RESTRAINT SYSTEMS GUIDELINES

CALIFORNIA BUILDING CODE 2019 (2019 CBC)

GREEN CLOUD - NEW PAGE
ORANGE CLOUD - REVISED PAGE

TABLE OF CONTENTS

PAGE	*DESCRIPTION*
TOC1	INDEX SECTION 1
1.1 - 10.6b	SECTION 1: INTRODUCTION, APPLICATION GUIDELINES AND NOTES
A0.1	INDEX SECTION A
A1.0E - A6.1	SECTION A: GENERAL LAYOUTS GUIDELINES, OFFSETS & SETBACKS
B0.1 - B0.6	INDEX SECTION B
B1.4 - B293	SECTION B: MEP SYSTEMS SEISMIC BRACING CONSTRUCTION DETAILS
C0.1	INDEX SECTION C
C9-G-A - C66	SECTION C: SEISMIC BRACING TABLES
D0.1 - D0.6	INDEX SECTION D
D1 - D8.13	SECTION D: BRACE ARM ANCHORAGE, SUPPORT AND ATTACHMENTS DETAILS
E0	INDEX SECTION E
E0.1 - E4.7	SECTION E: SEISMIC RESTRAINT BRACE ARM ASSEMBLIES
F0	INDEX SECTION F
F1 - F24	SECTION F: ISAT SEISMIC RESTRAINT HARDWARE
G0.1 - G0.5	INDEX SECTION G
G1 - G10.1	SECTION G: VERTICAL SUPPORT SYSTEMS
H0	INDEX SECTION H
H1 - H5.2	SECTION H: GENERAL HARDWARE
X0	INDEX SECTION X
X1.1 - X4.1	SECTION X: REFERENCE DOCUMENTS

REVIEWED FOR CODE COMPLIANCE
HCAi
OPM-0403
BY: William Staehlin
DATE: 01-26-2024
CALIFORNIA BUILDING CODE, 2022

REGISTERED PROFESSIONAL ENGINEER
MARCIN WASAZNIK
S-6612
STRUCTURAL
STATE OF CALIFORNIA

ISAT
A Division of Tomarco Contractor Specialties

International Seismic Application Technology
14848 Northam Street, La Mirada, CA 90638
877-999-4728 (Toll Free) 714-523-0845 (fax)
www.isatsb.com

INDEX – INTRODUCTION, GUIDELINES, AND NOTES

PAGE	*DESCRIPTION*
1.1 – 1.5	INTRODUCTION
	APPLICATION GUIDELINES
2.1 – 2.6	DESIGN CONSIDERATIONS
3.1 – 3.3	NOMENCLATURE
4.1 – 4.5	GENERAL APPLICATION NOTES
5.1 – 5.3	HOW TO UTILIZE THE MANUAL
6.1 – 6.5	EXAMPLES – HOW TO UTILIZE THE MANUAL
	SEISMIC BRACING NOTES – 2013 CBC AND 2016 CBC
7.1 – 7.4	SUSPENDED ELECTRICAL SYSTEMS
8.1 – 8.5	SUSPENDED MECHANICAL PIPING SYSTEMS
9.1 – 9.5	HVAC DUCT AND MECHANICAL COMPONENTS
10.1 – 10.5	SUSPENDED PLUMBING PIPING
	SEISMIC BRACING NOTES – 2019 CBC
7.1a – 7.5a	SUSPENDED ELECTRICAL SYSTEMS
8.1a – 8.6a	SUSPENDED MECHANICAL PIPING SYSTEMS
9.1a – 9.6a	HVAC DUCT AND MECHANICAL COMPONENTS
10.1a – 10.6a	SUSPENDED PLUMBING PIPING
	SEISMIC BRACING NOTES – 2022 CBC
7.1b – 7.5b	SUSPENDED ELECTRICAL SYSTEMS
8.1b – 8.6b	SUSPENDED MECHANICAL PIPING SYSTEMS
9.1b – 9.6b	HVAC DUCT AND MECHANICAL COMPONENTS
10.1b – 10.6b	SUSPENDED PLUMBING PIPING

VERIFIED FOR CODE COMPLIANCE
HCAi
OPM-0403
BY: William Staehlin
DATE: 01/26/2024
CALIFORNIA BUILDING CODE, 2022

REGISTERED PROFESSIONAL ENGINEER
MARCIN WASAZNIK
S-6612
STRUCTURAL
STATE OF CALIFORNIA

ISAT
A Division of Tomarco Contractor Specialties

International Seismic Application Technology
14848 Northam Street, La Mirada, CA 90638
877-999-4728 (Toll Free) 714-523-0845 (fax)
www.isatsb.com

INTRODUCTION

2013 California Building Code Compliant

The International Seismic Application Technology (ISAT) *Applications, Design and Inspection Manual* provides guidelines for the design and installation of engineered seismic restraint systems for interior suspended utilities for OSHPD 1, 2 & 4 buildings regulated by the Office of Statewide Health Planning and Development (OSHPD). These applications include hospitals, skilled nursing facilities, intermediate care facilities and correctional treatment centers.

This pre-approval is limited to seismic bracing of interior pipes, ducts, and electrical raceways only. It does not address other loads such as, but not limited to, those generated by thermal growth, pressure, fluid dynamics, pipe rupture, or movement of equipment to which brace components are attached. It does not address components that cross seismic separation of buildings. Nor does it address components (other than pipe risers) attached to portions of the structure or equipment that will experience relative seismic displacement.

The utility components encompassed within the *Manual* are:

DISTRIBUTED ELECTRICAL SYSTEMS (RACEWAYS) & EQUIPMENT

- Electrical Conduit
- Cable Trays
- Bus Duct and Busway
- Suspended Equipment

DISTRIBUTED PIPING SYSTEMS & MECHANICAL SYSTEMS

- Mechanical Piping
- HVAC Duct
- Plumbing and Process Piping
- Suspended Equipment
- Fire Protection (Outside the scope of this manual)

The bracing details provide options for utilizing ISAT seismic restraint brackets in conjunction with approved Brace Arm Assembly options cataloged in Subsection "E" of the Manual.

BRACING MEMBERS USED FOR OPM

- Strut Channel
- Cable 7x19 Steel Small Diameter Galvanized Specialty Cord, ASTM A1023/A1023M Table 7
- EMT

REVIEWED FOR CODE COMPLIANCE
OPM-0403
BY: William Staehlin
DATE: 01-26-2024
CALIFORNIA BUILDING CODE, 2022

INTRODUCTION (CONTINUED)

RANGE OF COMPONENT SIZES AND MATERIAL USED FOR OPM

a) Pipes:
   a. Steel; Sch. 10 and larger - Sizes up to 36"
   b. Copper; Type L and K - Sizes up to 6”
   c. Cast Iron Pipe - Sizes 2” - 15”
b) Ducts:
   a. Galvanized Rectangular Duct; all sizes up to 120" wide
   b. Galvanized Round Duct; 3" to 72"
c) Conduits/Cable Trays:
   a. RMC Conduit - Sizes up to 6"
   b. IMC Conduit - Sizes up to 4"
   c. EMT Conduit - Sizes up to 4"
   d. Cable trays -- ladder type, all sizes

The substrates included in this pre-approval are as follows:
   a. Concrete
   b. Metal Deck
   c. Steel
   d. Wood
   e. Masonry

REVIEWED FOR CODE COMPLIANCE
HCAi
OPM-0403
BY: William Staehlin
DATE: 01-26-2024
CALIFORNIA BUILDING CODE, 2022

INTRODUCTION (CONTINUED)

GENERAL CODE COMPLIANCE

ISAT installation details and engineered bracing tables are suitable for use under the following codes and requirements:

- 2019 California Building Code (2019 CBC); provisions per OSHPD
- ASCE 7-16, Minimum Design Loads For Buildings and Other Structures, as amended by the 2019 CBC, as applicable
- Refer to pages 7.1a - 7.5a, 8.1a - 8.6a, 9.1a - 9.6a, 10.1a - 10.6a for the 2019 CBC
- Refer to pages 7.1b - 7.5b, 8.1b - 8.6b, 9.1b - 9.6b, 10.1b - 10.6b for the 2022 CBC

Exemptions from the seismic design of nonstructural components are defined by the 2019 CBC Section 1617A.1.18 for OSHPD 1 & 4 buildings and by ASCE 7, Sections 13.1.4 and 13.6 as amended by Chapter 16, 2019 CBC for OSHPD 2 Buildings.

SEISMIC FORCE FORMULAS

The *ISAT Applications, Design and Inspection Manual* provides seismic restraint requirements engineered for use within a broad range of horizontal accelerations. Information required at the beginning of the process includes project type, location, seismic force variables, and the seismic design specifications or performance criteria. Once these parameters have been determined and certain basic calculations have been performed, ISAT's Engineered Bracing Tables and Detail Drawings are used to define the seismic bracing requirements for the suspended utilities.

ASCE 7, Section 13.1.1 requires design of the seismic restraints for nonstructural components. The resultant construction documents are to be prepared by a registered design professional.

Seismic Design Force for the component, Fp, is calculated per ASCE 7 Equations 13.3-1 thru 13.3-3. In order to perform these calculations, it is first necessary that the project specific S_{DS} value, be provided by the Engineer of Record or the Project Architect. The S_{DS} value should be identified on the construction documents.

Note: Max allowable S_{DS} for this OPM is limited to 2.5g

SEISMIC FORCE VARIABLES

Spectral Response Acceleration at Short Periods, S_{DS}
Component Amplification Factor, a_p
Component Response Modification Factor, R_p
Component Importance Factor, I_p
Component Operating Weight, W_p
Height in Structure, Point of Component Attachment With Respect To Base, z
Average Roof Height With Respect To Base, h

Component importance factor, Ip, for design of supports and attachments shall be in accordance with the CBC 2019 Section 1617A.1.17 for OSHPD 1 & 4 buildings. Component importance factor, Ip, for OSHPD 2 buildings shall be in accordance with ASCE 7 Section 13.1.3

The ISAT Project Worksheet located at the back of the *Manual* is provided as a vehicle for gathering the required information. To obtain assistance in performing calculations, complete the Worksheet and transmit it to ISAT Technical Service. The resultant F_p values will then be calculated by ISAT and returned in conjunction with project specific submittal documentation in accordance with OSHPD PIN 62.

REVIEWED FOR CODE COMPLIANCE
OPM-0403
BY: William Staehlin
DATE: 01-26-2024
CALIFORNIA BUILDING CODE, 2022

INTRODUCTION (CONTINUED)

ISAT ENGINEERED BRACING TABLES

The cumulative result of applying the seismic demand formulas is the need to provide engineered seismic restraint systems covering a substantial range of possible horizontal accelerations. For simplicity, the worst case horizontal acceleration can be calculated at the underside of the roof deck and then used for all floors of the structure. However, to achieve economy of installation, the horizontal acceleration for each floor can be computed separately and used in conjunction with the ISAT bracing tables.

In response to this need ISAT has generated concise tables of the minimum restraint requirements for a broad array of component accelerations applied to commonly used suspended utilities.

Please note - The use of the ISAT Engineered Bracing Tables is only applicable in conjunction with the use of ISAT's family of seismic restraint hardware. No Substitutions Allowed.

SECTION DESCRIPTIONS

This Manual encompass ten sections described below:

Section 1: **INTRODUCTION, GUIDELINES AND NOTES:** Includes introduction, design considerations, nomenclature, general application notes, and seismic bracing notes for suspended Mechanical, Electrical and Piping (MEP) bracing systems. In addition, tables with requirements and exceptions are included for different Seismic Design Categories (SDC).

Section A - GENERAL LAYOUTS GUIDELINES, OFFSETS AND SETBACKS: This section comprises general layouts guidelines, offsets and setbacks for MEP trades including single hung and trapeze applications. Trades included: Conduit, Steel Piping and HVAC Mechanical Ducts.

Section B – MEP SYSTEMS SEISMIC BRACING CONSTRUCTION DETAILS: General details for MEP seismic rigid and cable bracing construction are included in this section. Details are divided in subsections with drawings for single hung and trapeze supported applications for different services such as Conduit, Steel Pipe, HVAC Duct, Cable Trays, Bus Duct, Suspended Fans, among others.

Section C – SEISMIC RESTRAINT ENGINEERED BRACING TABLES: Seismic bracing tables incorporate engineered solutions using Seismic Design Forces ranging from 0.25G to 1.50G. The bracing tables present the minimum brace assemblies and anchorages (form pour and metal deck) required for the single hung and trapeze applications.

Section D – BRACE ARM ANCHORAGE DETAILS: This section contains drawings for connections to form pour and metal and decks, including PRPIP and PRSDI inserts. Post Installed anchorage load capacity details are included for Hilti and Powers. Structural member connections details such as beam to beam, open web steel, wood, and walls are presented in charts showing load capacities with construction notes.

Section E – SEISMIC RESTRAINT BRACE ARM ASSEMBLIES: This section defines the most common seismic restraint (rigid and cable) brace arm assemblies. Rigid bracing assembly connections include Tite-End True torque and strut nut connectors. Cable bracing Wedgy assembly connections include thru-bolted, cable clip and swaged connection details.

REGISTERED PROFESSIONAL ENGINEER MARCIN WASAZNIK S 6612 STRUCTURAL STATE OF CALIFORNIA

ISAT
A Division of Tomarco Contractor Specialties

International Seismic Application Technology
14848 Northam Street, La Mirada, CA 90638
877-999-4728 (Toll Free) 714-523-0845 (fax)
www.isatsb.com

Rev. 4
08/18/17
Page
1.4

01/26/2024 OPM-0403: Reviewed for Code Compliance by William Staehlin Page 9 of 1157

INTRODUCTION (CONTINUED)

Section F – ISAT SEISMIC RESTRAINT HARDWARE: The ISAT seismic restraint hardware section includes brackets, Longitudinal Restraint Devices (LRD), pipe hanger accessories, inserts for PIP and Steel Deck (SDI) applications.

Section G – VERTICAL SUPPORT SYSTEMS: Vertical support systems section includes rod stiffening, strut channel, and structural steel load requirements. Also, maximum tension values for ISAT Blue Banger Hanger (BBH) and Push Rod Inserts. Load capacities of various post installed concrete anchorages are evaluated including Hilti and Powers anchors. Design is controlled by seismic forces. Non-seismic forces such as gravity are outside the scope of this OPM.

Section H – GENERAL HARDWARE: Into the general hardware section this Manual includes maximum design load tables for all-thread rods, strut channels, screws, and FM approved PHD Manufacturing hardware.

Section X – REFERENCE DOCUMENTS: This section includes weight charts for Steel piping, Copper tubing, Cast-Iron Pipe, Electrical conduit, and HVAC ducts.

REVIEWED FOR CODE COMPLIANCE
HCAi
OPM-0403
BY: William Staehlin
DATE: 01-26-2024
CALIFORNIA BUILDING CODE, 2022

Deep Shah, S.E.
Director of Engineering

Marcin Wasaznik, S.E.
ISAT Manual and Code Compliance Lead

DESIGN CONSIDERATIONS

1. Information within the ISAT *Manual* is intended only as a guideline for the design of seismic restraint systems. It is not intended as the basis for the design of the suspended utility nor is it intended to be all inclusive of every element of the suspended utility. Certain elements of systems such as trapeze assemblies, support frames for suspended mechanical equipment or pipe anchors and guides for steam lines may require additional design, analysis and detailing by a Registered Design Professional.

2. Distribution system supports and attachment shall require submittal of layout drawings in accordance with OSHPD PIN 62 Item # 11

3. Any deviation from the ISAT Bracing Tables or ISAT Installation Details shall only be made using sound design practices by a qualified engineer with the approval of the Engineer of Record and OSHPD.

4. It is the responsibility of the Engineer of Record for the building to confirm suitability of the structure to accept the vertical support loads and seismic reactions generated as a result of these designs.

5. All ISAT brace assemblies employ proprietary ISAT seismic brackets, third party tested and witnessed by a licensed California structural engineer. No deviations or substitutions allowed without OSHPD review and approval, and the express written consent of ISAT. Any unauthorized deviation or substitution voids all engineering.

6. Use of ISAT's elemental engineering data for the generation of custom engineered bracing solutions is solely the responsibility of the designer. Consultation with ISAT is advised. ISAT design values are subject to change without notice.

7. Where California Building Standards Code, 2013 (CBSC 2013) specification or job requirements deviate from those shown in the ISAT *Manual*, the more stringent requirement shall prevail.

8. ISAT materials and design work are produced with a degree of care and skill ordinarily exercised by other reputable members of our profession. No other warranty, expressed or implied, is made.

9. Where design of nonstructural components or their supports is required by ASCE 7-10, as amended by the CBC 2013, such design shall be shown in the construction documents prepared by a registered design professional for use by the owner, building officials, contractors and inspectors.

REVIEWED FOR CODE COMPLIANCE
HCAi
OPM-0403
BY: William Staehlin
DATE: 01-26-2024
CALIFORNIA BUILDING CODE 2022

DESIGN CONSIDERATIONS (CONTINUED)

10. The installation of seismic restraints for nonstructural components is subject to special inspections, testing and observation in accordance with OSHPD approved Testing, Inspection and Observation (TIO) form.

11. Registered Design Professional Responsibility:

The Registered Design Professional (RDP) is the engineer executing the design of the seismic bracing system. The RDP delivers the complete seismic bracing design to the Structural Engineer of Record (SEOR) for the OSHPD project. It is the responsibility of the Registered Design Professional in responsible charge to:

A. Verify that the nonstructural components or system is seismically qualified in accordance with the 2013 CBC.

B. Verify that the proper ISAT brace system is selected to meet the seismic requirements of this OPM.

C. Verify that the structure to which the ISAT seismic brace is anchored meets the requirements of the applicable anchorage ICC ESR Report.

D. Verify that anchor edge distance and spacing meets the requirements of the applicable ICC ESR.

E. Verify that the installation is in conformance with the 2013 CBC and with details shown in this OPM. Testing of post installed anchors shall also be performed in accordance with 2013 CBC Section 1913A.7.

REVIEWED FOR CODE COMPLIANCE
ICAI
OPM-0403
BY: William Staehlin
DATE: 01-26-2024
CALIFORNIA BUILDING CODE, 2022

DESIGN CONSIDERATIONS (CONTINUED)

12. Layout Drawings:
    A. Layout drawings of the supports, attachments, and bracing systems in accordance with the pre-approval shall be submitted to the Registered Design Professional (RDP) in responsible charge of the project for review to verify that the details are in conformance with the code requirements. The layout drawings shall, as a minimum, satisfy the requirements of ASCE 7 Section 13.6 (including Supplements # 1 & # 2) as modified by CBC 2013 Section 1616A.
        a. The Structural Engineer Of Record (SEOR) shall verify that the supporting structure is adequate for the forces imposed on it by the supports, attachments and braces installed in accordance with the pre-approval in addition to all other loads.
        b. The SEOR shall forward the supports, attachments, and bracing drawings (including construction documents for supplementary framing, where required) to the discipline in responsible charge with a notation indicating that the drawings have been reviewed and are in general conformance with the pre-approval and the design of the project.
        c. A "review stamp" may be used to indicate compliance with this requirement.
        d. The Registered Design Professional (RDP), other than SEOR, may provide the shop drawing stamp for small projects at the discretion of OSHPD.
    B. The SEOR shall design any supplementary framing that is needed to resist the loads, maintain stability and/or is required for installation of pre-approved system. The supplementary framing shall be submitted to OSHPD as construction documents.
    C. The layout drawings with the review stamp, shall be submitted to OSHPD for verification of the following:
        a. Structure supporting the distribution system has adequate capacity;
        b. Seismic design forces (F_P) are in accordance with the 2013 CBC; and
        c. Submittal is within the scope of OSHPD Preapproval of Manufacturer's Certification (OPM):
            i. Size of distribution system components
            ii. Spacing of bracing and flex. joints, and
            iii. Substrate for attachments
            iv. Review of those parts not approved through the OPM.
    D. The layout drawings (with the shop drawing stamp) shall be kept on the jobsite and can then be used for installation of the support and bracing.
        a. OSHPD field staff will review the installation.
    E. A copy of the bracing system(s) installation guide/OPM manual shall be on the jobsite prior to starting the installation of hangers and/or braces.
        a. It is the contractor's responsibility to obtain copies of the OPM and furnish the IOR with one copy of each.

REVIEWED FOR CODE COMPLIANCE
HCAI
OPM-0403
BY: William Staehlin
DATE: 01-26-2024
CALIFORNIA BUILDING CODE 2022

DESIGN CONSIDERATIONS (CONTINUED)

F. Components of two or more pre-approved bracing systems shall not be mixed.
   a. Only one pre-approved bracing system may be used for a run of pipe, duct, or conduit.
   b. Any substitution of a component of an OPM system shall require OSHPD review and approval.

13. Post installed concrete anchors:

A. Anchors to be installed in accordance with their corresponding ICC-ES Report and 2019 CBC §1917A.1.19

B. Anchors to be tested in accordance with 2019 CBC §1910A.5

14. Post Installed Anchor Test Values (concrete/metal deck install at soffit; concrete slab installed at either top or bottom):

REVIEWED FOR CODE COMPLIANCE
HCAi
OPM-0403
BY: William Staehlin
DATE: 01-26-2024
CALIFORNIA BUILDING CODE, 2022

DESIGN CONSIDERATIONS (CONTINUED)

ANCHOR	ANCHOR SIZE Ø x h_{ef}	TORQUE TEST VALUES (FT-LBS)	CONCRETE SLAB TEST VALUES (1.25*strength capacity)	CONCRETE OVER METAL DECK TEST VALUES[1] (1.25*strength capacity)	CONCRETE SLAB TEST VALUES (1.25*strength capacity)	CONCRETE OVER METAL DECK TEST VALUES[1] (1.25*strength capacity)
			3,000 PSI		4,000 PSI	
HILTI KWIK BOLT-TZ2 (ESR-4266)	3/8" x 2"	30	1983	1399	2289	1596
	1/2" x 2"	50	1983	1301	2289	1503
	1/2" x 3 1/4"	50	3325	2035	3839	2284
	5/8" x 2 3/4"	40	3196	2395	3691	2765
	5/8" x 4"	40	4539	2678	5241	3093
	3/4" x 3 3/4"	110	5090	2273	5878	2565
HILTI KWIK BOLT-TZ2 B DECK (ESR-4266)	3/8" x 2"	30	N/A	1298	N/A	1481
	1/2" x 2"	50		903		1041
	1/2" x 3 1/4"	50		1152		1293
	5/8" x 2 3/4"	40		1152		1330
POWER-STUD SD2 (ESR-2502)	3/8" x 2"	20	1402	881	1543	969
	1/2" x 2"	40	1605	893	1853	1031
	1/2" x 3 1/4"	40	2921	1584	3372	1829
	5/8" x 3 1/4"	60	3324	N/A	3839	N/A
	5/8" x 4 1/4"	60	4971	3178	5740	3670
	3/4" x 3 3/4"	110	4120	N/A	4758	N/A
POWER-STUD SD2 B DECK (ESR-2502)	3/8" x 2"	20	N/A	762	N/A	838
	1/2" x 2"	40		874		1010
DEWALT SCREW – BOLT+ (ESR-3889)	1/4" x 1.94"	N/A	753	680	821	741
	3/8" x 1.33"		601	786	694	908
	3/8" x 2.39"		1681	1395	1943	1611
	1/2" x 3.23"		3138	2456	3623	2836
	5/8" x 3.73"		2250	3014	2598	3480
HILTI KWIK HUS-EZ (ESR-3027)	1/4" x 1.18"	N/A	357	378	413	436
	3/8" x 1.11"		484	494	559	570
	1/2" x 1.52"		1063	500	1228	578
	1/2" x 3.22"		3279	2057	3786	2375
	5/8" x 3.88"		4337	3644	5008	4208
DEWALT SNAKE+ (ESR-2272)	3/8" x 1 1/8"	N/A	873	655	N/A	N/A
DEWALT HANGERMATE+ (ESR-3889)	1/4" x 1.425"	N/A	231	176	253	193
	3/8" x 1.425"		240	176	278	204
	1/2" x 1.425"		781	456	901	528

1. 3" deck w/ min 2½" concrete over, U.N.O.
2. Reinforcement of a #4 bar of greater between the anchor and the edge

REVIEWED FOR CODE COMPLIANCE
HCAi
OPM-0403
BY: William Staehlin
DATE: 01-26-2024
CALIFORNIA BUILDING CODE 2022

REGISTERED PROFESSIONAL ENGINEER
MARCIN WASAZNIK
S 6612
STRUCTURAL
STATE OF CALIFORNIA

ISAT
A Division of Tomarco Contractor Specialties

International Seismic Application Technology
14848 Northam Street, La Mirada, CA 90638
877-999-4728 (Toll Free) 714-523-0845 (fax)
www.isatsb.com

DESIGN CONSIDERATIONS (CONTINUED)

ANCHOR	ANCHOR SIZE	TORQUE TEST VALUES (FT-LBS)	CONCRETE SLAB TEST VALUES	CONCRETE OVER METAL DECK TEST VALUES	CONCRETE SLAB TEST VALUES	CONCRETE OVER METAL DECK TEST VALUES
			3,000 PSI		4,000 PSI	
HILTI KWIK BOLT-TZ* (ESR-1917)	3/8" x 2"	25	1515	890	1750	1028
	1/2" x 2"	40	1605	890	1854	1028
	1/2" x 3 1/4"	40	3281	1597	3789	1844
	5/8" x 3 1/8"	60	3135	N/A	3620	N/A
	5/8" x 4"	60	4539	2831	5241	3269
	3/4" x 3 3/4"	110	4120	N/A	4758	N/A
HILTI KWIK BOLT-TZ* B DECK (ESR-1917)	3/8" x 2"	25	N/A	1012	N/A	1168
	1/2" x 2"	40		807		933
	1/2" x 3 1/4"	40		1831		2115
	5/8" x 3 1/8"	60		1758		2030

*HILTI KWIK BOLT TZ is no longer supplied by manufacturer; refer to table on previous page for KB-TZ2 anchor (ESR-4266)

REVIEWED FOR CODE COMPLIANCE
HCAi
OPM-0403
BY: William Staehlin
DATE: 01-26-2024
CALIFORNIA BUILDING CODE, 2022

NOTES:

1. Anchor diameter refers to the thread size.
2. Apply proof test loads to anchors without removing the nut if possible. If not, remove nut and install a threaded coupler to the same tightness of the original nut using a torque wrench and apply load.
3. Reaction loads from test fixtures may be applied close to the anchor being tested, provided the anchor is not restrained from withdrawing by the fixture(s).
4. Test equipment is to be calibrated by an approved testing laboratory in accordance with standard recognized procedures.
5. TEST FREQUENCY: 50 percent or alternate bolts in a group, including at least one-half the anchors in each group, shall be tested. Exception: Where the factored design tension on anchors is less than 100 lbs. and those anchors are clearly noted on the approved construction documents, only 10 percent of those anchors shall be tested.
6. Testing and special inspection of expansion anchors shall be performed by an approved independent agency employed by the facility owner per CBC §1704A & §1910A.5, & CA § 7-149. all reports shall be sent to the inspector of record (IOR), owner, and the architect or engineer in responsible charge.
7. The following criteria apply for the acceptance of installed anchors:
    a. HYDRAULIC RAM METHOD: Anchors tested shall maintain the test load for a minimum of 15 seconds and exhibit no discernable movement at the applicable test load. A practical way to determine discernable movement is that the washer under the nut becomes loose.
    b. TORQUE WRENCH METHOD: The applicable test torque must be reached within ¼ turn of the nut for ⅜" diameter sleeve anchors and ½" turn of the nut for all others.
8. Testing should occur 24 hours minimum after installation of the subject anchors.
9. Refer to appropriate D and G pages for appropriate slab installation parameters. Refer to appropriate D and G pages for appropriate concrete over metal deck installation parameters.
10. Maximum Impact Wrench Torque (Values not applicable for hand wrench)
11. All concrete flat slabs, walls, and beams must have a minimum of #4 bar or greater between the anchor and the edge of concrete.

REVIEWED FOR CODE COMPLIANCE
OPM-0403
BY: William Staehlin
DATE: 01-26-2024
CALIFORNIA BUILDING CODE 2022

REGISTERED PROFESSIONAL ENGINEER
MARCIN WASAZNIK
S 6612
STRUCTURAL
STATE OF CALIFORNIA

ISAT
A Division of Tomarco Contractor Specialties

International Seismic Application Technology
14848 Northam Street, La Mirada, CA 90638
877-999-4728 (Toll Free) 714-523-0845 (fax)
www.isatsb.com

NOMENCLATURE

a	Acceleration
ABF	Angle Bracket, Fixed
ABHW	Anchor Bracket, Hinged Welded
AB45	Angle Bracket, 45 Degree (w/ Factory Tied Wire)
AB90	Angle Bracket, 90 Degree (w/ Factory Tied Wire)
ACI	American Concrete Institute
AHJ	Authority Having Jurisdiction
ASJ	All Service Jacket
ASCE	American Society of Civil Engineers
ASD	Allowable Stress Design
ASHRAE	American Society of Heating, Refrigerating and Air-Conditioning Engineers
ASME	American Society of Mechanical Engineers
ASTM	American Society for Testing and Materials
Anc	Anchor
ANSI	American National Standards Institute
ATR	All Thread Rod
AWG	American Wire Gage
Ax	Torsional Acceleration Factor
ap	Component Acceleration Factor
api	Acceleration at Level *i* for Modal Analysis
CB	Cable Brace Arm
CBC	California Building Code
CBS	Cross Bolt Sleeve
Dia	Diameter
Dp	Relative Seismic Displacement of a Component
Fp	Component Seismic Design Force
FSB	Flute Span Bracket
Ft, ft	Feet
ft-lbs	Foot-Pounds, Torque or Moment
Fv	Vertical Seismic Acceleration
G, g	Gravitation Force
Ga, ga	Gage
h	Average Roof Height
HVAC	Heating, Ventilation and Air Conditioning

REVIEWED FOR CODE COMPLIANCE
IICAi
OPM-0403
BY: William Staehlin
DATE: 01-26-2024
CALIFORNIA BUILDING CODE, 2022

REGISTERED PROFESSIONAL ENGINEER MARCIN WASAZNIK S 6612 STRUCTURAL STATE OF CALIFORNIA

ISAT
A Division of Tomarco Contractor Specialties
International Seismic Application Technology
14848 Northam Street, La Mirada, CA 90638
877-999-4728 (Toll Free) 714-523-0845 (fax)
www.isatsb.com

Rev. 1
08/18/17
Page
3.1

01/26/2024 OPM-0403: Reviewed for Code Compliance by William Staehlin Page 18 of 1157

NOMENCLATURE (CONTINUED)

ICC	International Code Council
IFI	Industrial Fasteners Institute
Ip	Component Importance Factor
ISAT	International Seismic Application Technology
L	Longitudinal
Lbs	Pounds Force
lf	Linear Foot
LRD	Longitudinal Restraint Device
LRFD	Load and Resistance Factor Design
LWC	Sand Light Weight Concrete (See General Application Note No. 34, pg 4.4)
m	Meter
mm	Millimeter
Max	Maximum
MEP	Mechanical, Electrical and Plumbing
Mfg	Manufacturer
Min	Minimum
MSS	Manufacturers Standardization Society
NWC	Normal Weight Concrete
NFPA	National Fire Protection Association
OSHPD	Office of Statewide Health Planning and Development, CA
OSP	OSHPD Special Seismic Certification Preapproval per OSHPD PIN 55
P	Brace Reaction
P_h	Brace Reaction, Horizontal Component
P_v	Brace Reaction, Vertical Component
PIP	Poured-In-Place Insert
Pl	Plate
PLF	Pounds Per Linear Foot
POR	Professional Of Record
PSI, psi	Pounds per Square Inch
RB	Rigid Brace Arm
rad	Radian
RCC	Rod Capture Cable Bracket
RCHW	Rod Capture, Hinged Welded Bracket
S_{DS}	Design Spectral Acceleration, short period
SDF	Seismic Design Force (Fp)
SDI	Steel Deck Insert
SSC	Special Seismic Certification
s/m	Sheet Metal

REVIEWED FOR CODE COMPLIANCE BY HCAi
BY William Staehlin
DATE 01/26/2024
CALIFORNIA BUILDING CODE, 2022

NOMENCLATURE (CONTINUED)

SMACNA	Sheet Metal And Air-Conditioning Contractors National Association
T	Transverse
TL	Transverse, Longitudinal
TR	Trapeze
TVL	Total Vertical Load
Wp	Component Operating Weight
Wshr	Washer
z	Component Attachment Height within the Structure

REVIEWED FOR CODE COMPLIANCE
HCAi
OPM-0403
BY: William Staehlin
DATE: 01-26-2024
CALIFORNIA BUILDING CODE, 2022

GENERAL APPLICATION NOTES

1. This OSHPD preapproval of manufacturer's certification (OPM) is based on the CBC 2013. The demand (design forces) for use with this OPM shall be based on the CBC 2013.

2. "Every structure, and portion thereof, including nonstructural components that are permanently attached to structures and their supports and attachments, shall be designed and constructed to resist the effects of earthquake motions in accordance with ASCE 7, as modified by the CBC 2013.

3. Project seismic design parameters shall be defined on the plans or within the construction documents by the Engineer of Record in accordance with CBC 2013 Section 1603A.1.5, "Earthquake design data". Specific earthquake data used for nonstructural seismic bracing design includes S_{DS}, z/h and I_p. Component Importance Factors are those assigned by the design team, not ISAT.

4. Information within the ISAT Manual is intended only as a guideline for the design of seismic restraint systems. It is not intended as the basis for the design of the suspended utility nor is it intended to be all inclusive of every element of the suspended utility. Certain elements of systems such as trapeze assemblies, support frames for suspended equipment may require additional design, analysis and detailing by a Registered Structural Engineer. Contact ISAT Technical Service for assistance.

5. All seismic bracing assemblies shall utilize ISAT supplied, proprietary, seismic brackets unless noted otherwise. No Substitutions Allowed.

6. The Engineer of Record for the building shall review the ISAT attachment details and loads to determine the suitability of the structure to accept such loads prior to installation of the seismic bracing system (Consistent with OSHPD PIN 62).

7. Component importance factor, I_p, for design of supports and attachments shall be in accordance with the CBC 2013 Section 1616A.1.17 for OSHPD 1 & 4 buildings. Component importance factor, I_p, for OSHPD 2 buildings shall be in accordance with ASCE 7-10 Section 13.1.3. Structural Engineer of Record shall assign the importance factor for OSHPD review and approval.

8. Every run which requires bracing shall have a minimum of two Transverse Brace locations and one Longitudinal Brace location.

9. For the purpose of these guidelines a "run" is defined as a suspended, distributed utility having a minimum of 10 foot straight run length. Refer to Page A1.2 for guidance on treating interconnected short runs with multiple off-sets.

10. If a change in run direction results in an offset in the run, the offset may not be required to be braced. Refer to specific guidelines per the "A" series pages.

REVIEWED FOR CODE COMPLIANCE
HCAI
OPM-0403
BY: William Staehlin
DATE: 04-26-2024
CALIFORNIA BUILDING CODE, 2022

REGISTERED PROFESSIONAL ENGINEER
MARCIN WASAZNIK
S 6612
STRUCTURAL
STATE OF CALIFORNIA

ISAT
A Division of Tomarco Contractor Specialties

International Seismic Application Technology
14848 Northam Street, La Mirada, CA 90638
877-999-4728 (Toll Free) 714-523-0845 (fax)
www.isatsb.com

GENERAL APPLICATION NOTES (CONTINUED)

11. Solid strut provides higher design capacities than punched or slotted and may allow for greater brace spacing. The ISAT Bracing Tables, therefore, are based on the use of solid strut for rigid seismic restraint brace arm construction unless noted otherwise. Refer to page E1 for brace arm lengths and capacities. Punched or short slot channel may be used provided the reduced design values on Page E1.1 and E1.2 are accounted for.

12. For trapeze construction at seismic restraint locations, strut may be solid or punched with holes. Trapeze beam elements and maximum uniform loads are shown on Page G2.

13. Solid, punched or short slot strut may be used for rod stiffening per Page G1 and for rigid brace arms or as trapeze elements. Use short slot strut as trapeze elements only at non-seismic locations.

14. Strut with 3” long slot or large diameter knockouts are not to be used.

15. Where brace elements are through-bolted, the mounting hole in the element is to be no more than 1/16” in diameter larger than the bolt or threaded rod.

16. A Longitudinal Brace at a 90 degree change in direction may act as a Transverse Brace if it is located within 2 feet of the change in direction or within the set back distances per the “A” series pages. The brace arm and anchorage must be sized to meet or exceed the requirements of the tabulated total brace loads. A brace arm for a smaller distributed utility is not to be utilized as transverse or longitudinal brace for an adjoining run of a larger distributed utility.

17. A Transverse Brace at a 90 degree change in direction may act as a Longitudinal Brace if it is located within 2 feet of the change in direction or within the set back distances per the “A” series pages. The brace arm and anchorage must be sized to meet or exceed the requirements of the tabulated total brace loads. A brace arm for a smaller distributed utility is not to be utilized as transverse or longitudinal brace for an adjoining run of a larger distributed utility.

18. A brace arm for a smaller distributed utility is not to be utilized as a transverse or longitudinal brace for an adjoining run of a larger distributed utility.

19. When utilizing cable bracing (for other than vibration isolated systems or on piping likely to have thermal expansion and/or contraction), tension the cable to remove slack without inducing uplift of the suspended element. Cable installation is to be symmetrical.

20. Avoid bracing to structural elements which may respond differently in a seismic event.

REVIEWED FOR CODE COMPLIANCE
OPM-0403
BY: William Staehlin
DATE: 01-26-2024
CALIFORNIA BUILDING CODE 2022

GENERAL APPLICATION NOTES (CONTINUED)

21. As a general rule, do not mix rigid bracing and cable bracing within the same direction in the same run. However, once bracing has made a 90 degree change in run direction, the bracing type may switch from rigid to cable or vice versa when approved by OSHPD.

22. Bracing may be installed with up to +/- 7-½ degrees variation from "true" Transverse or "true" Longitudinal alignment without the need for additional engineering. Refer to installation details.

23. Minimum Rod Diameter sizes for seismic brace locations are shown within the ISAT "C" Series Engineered Bracing Tables. For locations utilizing cable brace arms, the rod size is based on dead load plus a vertical seismic acceleration force equal to 0.2 S_{DS} W_P in accordance with ASCE 7-10, Sections 12.4.2.2 and 13.3.1. Where rigid brace arms are to be utilized the vertical component of the seismic brace reaction has also been added to the rod load. Rod strength values are listed within the "H" series pages.

24. Compare ISAT minimum rod diameters to the local trade specific requirements and to the project specifications. The more conservative of the two shall govern.

25. Bolt connection strength and strut-nut slippage design values are based on the Manufacturer's recommended bolt torque. If these are not given use the values listed here:

3/8" Diameter Bolt	19 ft-lbs
1/2" Diameter Bolt	50 ft-lbs
5/8" Diameter Bolt	100 ft-lbs

For RC-1, RC-2 and RC2.1 Rod Stiffener tightening requirements, refer to Page G1.

26. Project Engineer of Record to determine minimum required spacing from ceiling support wires to un-braced suspended utilities. Ceiling support and bracing wires shall be spaced a minimum of 6" from all pipes, ducts, conduits and equipment that are not braced for horizontal forces, unless approved otherwise by the building official.

REVIEWED FOR CODE COMPLIANCE
HCAi
OPM-0403
BY: William Staehlin
DATE: 01-26-2024
CALIFORNIA BUILDING CODE 2022

GENERAL APPLICATION NOTES (CONTINUED)

27. Post installed anchor strength values used for attachment of seismic bracing to concrete decks are based on combined tension and shear in accordance with the recommendations of the Manufacturer's data given in the ICC evaluation report for the anchor. Refer to anchor installation pages for anchor torque, minimum anchor spacing and edge distance requirements.

28. Post installed mechanical expansion anchor embedment shown on ISAT details is to be measured before the anchor setting torque is applied. The observed anchor projection after the proper torque is applied may increase by a maximum of one bolt diameter.

29. Seismic bracing may not pass through a structural seismic separation joint. Utility systems that pass through a seismic separation joint must be seismically restrained within 2 feet of both sides of the separation or within 2 feet of point of connection of any hardware designed to accommodate seismic movement across the span of the separation joint in accordance with ASCE 7-10 Section 13.3.2.2.

30. With the approval of the Structural Engineer of Record, utility systems within a basement that are suspended from the overhead deck may be braced to load bearing basement walls provided that the walls and the overhead deck will respond similarly during a seismic event.

31. The ISAT component design and published loads to the structure are working loads. Maximum anchorage design loads are working loads based on combined tension and shear. Anchor ultimate strength values have been converted to working loads in accordance with the anchor manufacturer's ICC Report.

32. For ISAT seismic restraint components, refer to Section F. For all general components refer to Section H, Approved Hardware and Qualified Manufacturers.

33. Where the Code allows seismic restraints to be omitted from a component, provisions shall be made to avoid seismic impact with other components or impact with elements of the building structure. Consequential damage risk analysis of non-braced components to be by others in accordance with CBC 2016, 1616A.1.21 Modification to ASCE 7, Section 13.5.6.2.2 Item #5.

34. For anchorage designs presented in this Manual, light weight concrete (LWC) is to be sand light weight concrete.

35. In developing the ISAT Bracing Tables, the pipe stress limitations of ASCE 7-10, Section 13.6.8 were determined and accounted for when engineering the Maximum Allowable Transverse Brace Spacing.

REVIEWED FOR CODE COMPLIANCE
OPM-0403
BY: William Staehlin
DATE: 01-26-2024
CALIFORNIA BUILDING CODE, 2022

GENERAL APPLICATION NOTES (CONTINUED)

36. Brace locations may be field relocated to an alternate support location within the same utility run when the length of the utility tributary to the brace does not exceed the brace spacing tabulated in the C-Series Bracing Tables. Anchorage and support rod details are to be taken from the Bracing Tables.

37. Rigid grooved coupling listed for UL Standard 213 shall be permitted in horizontal run of pipe. Flexible grooved coupling listed for UL Standard 213 shall be permitted in vertical risers (to accommodate drift) and other locations (e.g. seismic separation, equipment nozzle, etc.) to accommodate small movement and/or rotation. Non-UL listed groove couplings shall not be used unless approved on project specific basis. Exception: Cast-iron (no-hub pipe) brace spacings shall be in accordance with ASTM C1540, shall be certified in accordance with FM 1680 Class 1 and gravity hangers shall be spaced per the requirements of Table 313.1 of the 2013 California Plumbing Code (CPC 2013) for no-hub cast iron pipe.

REVIEWED FOR CODE COMPLIANCE
HCAi
OPM-0403
BY: William Staehlin
DATE: 01-26-2024
CALIFORNIA BUILDING CODE, 2022

HOW TO UTILIZE THE MANUAL

To effectively utilize the ISAT Engineered Bracing Tables and Detail Drawings, employ the following procedure.

Step One: **Determine "Seismic Design Force"**

1. Determine the "Seismic Design Force" (SDF) requirements for the project by gathering site specific seismic parameters from the plan set, contract documents and/or the Engineer of Record. See Project Information Worksheet in the back of the Manual. Most of the required information is typically found on the title sheet of the structural plans (commonly Dwg. S.0 or similar).

2. Using the "Structural Engineering Data" from the Project Worksheet calculate Seismic Design Force (Fp) per Formulae 13.3-1, 13.3-2 and 13.3-3 from ASCE 7-10, Section 13.3. The Code Formulae can be found on the ISAT Project Information Worksheet at the back of the Manual. The Component Coefficients, ap, Rp, are to be those taken from ASCE 7-10, Table 13.6-1.

$$F_p = \frac{0.4 a_p S_{DS} W_p}{\left(\frac{R_p}{I_p}\right)}\left(1 + 2\frac{z}{h}\right) \qquad (13.3\text{-}1)$$

F_p is not required to be taken as greater than

$$F_p = 1.6 S_{DS} I_p W_p \qquad (13.3\text{-}2)$$

and F_p shall not be taken as less than

$$F_p = 0.3 S_{DS} I_p W_p \qquad (13.3\text{-}3)$$

REVIEWED FOR CODE COMPLIANCE
HCAi
OPM-0403
BY: William Staehlin
DATE: 01-26-2024
CALIFORNIA BUILDING CODE, 2022

3. The elevation "z", the height in structure of point of attachment of the component with respect to the base of the structure plays an important role in deriving the SDF. Each story of the structure can have a different SDF value. When considering elevation and its influence there are several approaches which may be employed for calculating Seismic Design Force.

   a. To generate a single Seismic Design Force value which may be universally applied to the entire structure, calculate SDF utilizing the Roof Elevation as the factor for both *z* and *h.* This provides a worst-case result which may then be used on any story of the structure where $z \leq h$.

b. For optimum economy of bracing installation, it may be desirable to calculate Seismic Design Force on a floor-by-floor basis. To do so, calculate SDF for each story using the elevation of the floor above as *z*, (eg. for the 3rd Floor, use the 4th Floor elevation in the calculation. For the Top Floor, use the Roof Elevation.) The results will be such that the lowest floor levels will require bracing to comply with a comparatively low seismic force while the upper floors will require bracing to comply with a much higher force.

c. For multi-story high rise construction, it may be desirable to group floors into quadrants for the purposes of calculating SDF. Using a 20-story structure, for example, consider the structure as 4 separate zones. Calculate SDF for the 5th Floor and apply this value to the 5th Floor and all Floors below it. Do the same for the 10th Floor and apply the result to all floors from 6 up through 10. Continue the same method up to the top of the structure.

d. Compare the results against minimum and maximum force requirements per Formulas 13.3-2 & -3.

e. As a final step before proceeding on to utilize ISAT's pre-engineered Bracing Tables, convert the results to Allowable Stress Design (ASD) by dividing the Seismic Design Force for the overall structure or for each floor by 1.4. Contact ISAT Technical Support if assistance is required in performing any of the above calculations.

f. ASCE 7-10 table 13.6-1requirement, "over-strength factor Ω_0, required for anchorage to concrete" has been accounted for within the calculations for all pre-engineered anchorages within the ISAT Manuals and need not be applied to the values derived within the ISAT Worksheet.

Step Two: **Determine the Correct Bracing Table and Detail**

4. Refer to the Index of Electrical Systems Seismic Bracing Tables beginning on Page C0.1. Identify the Bracing Table most closely related to the calculated SDF value and the specific utility system being braced. When the SDF falls between two Horizontal Force break points, use the next higher Horizontal Force. Never round down. For elements suspended from a trapeze, determine the correct trapeze weight range in lbs/lf. When the trapeze weight falls between two break points, use the next higher trapeze weight range. Never round down.

   Note: Within certain parameters, the user may select from rigid, cable or wire bracing systems.

REVIEWED FOR CODE COMPLIANCE
HCAi
OPM-0403
BY: William Staehlin
DATE: 01-26-2024
CALIFORNIA BUILDING CODE 2022

5. From the Bracing Table, select the correct row of information for the conduit size or trapeze weight range. The selected row defines the minimum requirements for installation of the vertical support and seismic restraints.

6. Next to the "Bracing Pattern" is the installation reference page (B Series). Turn to the series of pages indicated. Locate the detail most representative of the utility being braced and install the seismic restraints in compliance with the Bracing Table requirements, the requirements of the Brace Pattern Detail and associated call-outs

7. Prior to beginning installation, read a) the General Notes and b) the Seismic Bracing Notes – Suspended Electrical Systems, beginning on Pages 4.1 and 7.1 respectively.

Step Three: **Determine Brace Spacing, Brace Arms and Anchorage**

8. Lay out the seismic bracing on a run-by-run basis. Do not exceed the Maximum Transverse and Longitudinal Brace Spacing requirements from the Bracing Tables.

9. Construct the brace arms based on the Minimum Brace Assembly requirements from the Bracing Tables. See Pages E1 thru E4. for Assembly details and hardware requirements.

10. From the Bracing Table select the Minimum Brace Anchorage appropriate to the type of overhead concrete deck:

    Normal Weight Concrete (NWC); Page D1.

    Light Weight Concrete On Metal Deck (LWC); Page D2.

11. For Brace Anchorage connections to Structural Steel see the D3 thru D5 series pages. For Wood Framing see the D6 thru D7 series pages. For Wall Connections see the D8 series pages.

REVIEWED FOR CODE COMPLIANCE
HCAi
OPM-0403
BY: William Staehlin
DATE: 01-26-2024
CALIFORNIA BUILDING CODE, 2022

EXAMPLES – HOW TO UTILIZE THE ISAT MANUAL

The examples that are provided are intended solely to demonstrate how to utilize the ISAT pre-engineered bracing Manual. The SDS values shown are those furnished by the USGS based on the zip code of the Central Post Office for the example city and have not been adjusted for site specific soil conditions. The values shown are not to be used for project specific purposes.

EXAMPLE 1

Step One: **Determine "Seismic Design Force"**

Select an appropriate seismic restraint system for a 2 1/2" diameter steel pipe with welded connections on the 4th floor of a 4-story essential hospital facility in Anaheim. The pipe is suspended from the overhead roof deck. The overhead deck is composite 3" fluted metal deck and minimum 3,000 psi light weight concrete. The minimum concrete thickness is 3-1/4" above the top of the metal deck. Top of the deck is 60 feet above grade. Use rigid bracing for single hung pipe that is rigidly mounted at 45° from horizontal.

1. From the structural cover sheet of the contract drawings, the following information is used to complete the Structural Engineering Data section of the ISAT Project Worksheet.
   - Ip = 1.50 SDS = 0.94 Seismic Design Category: "F"
   - z = 60 feet h = 60 feet
2. Per ASCE 7-10, Table 13.6-1, for high deformability pipe with welded joints use ap = 2.5, Rp = 6 for anchorage per ASCE-7-10 section 13.4.1. You now have sufficient information to perform the SDF calculation as shown on the ISAT worksheet. Fp = 0.71g.

Step Two: **Determine the Correct Bracing Table**

1. Divide the result by 1.4 to arrive at "Allowable Stress Design" for use in applying the ISAT Engineered Bracing Tables.
   - 0.71/1.4 = 0.50 g's
2. Turn to Page C0.1
   - Select Page C11-0.5-45 for 0.50 g's Horizontal Force.

Step Three: **Determine Brace Spacing, Brace Arms and Anchorage**

1. From Page C11-0.5-45, using the row corresponding to 2 1/2" diameter pipe, read across the Table for the minimum Transverse Bracing Requirements:
   - Support the 2 1/2" pipe via a minimum 1/2" diameter threaded rod at a maximum of 10 feet o.c.
   - Install a 1-way transverse brace.

REVIEWED FOR CODE COMPLIANCE
HCAi
OPM-0403
BY: William Staehlin
DATE: 01/26/2024
CALIFORNIA BUILDING CODE, 2019

EXAMPLE 1. CONTINUED

- Maximum Transverse Brace Spacing to be 40 feet.
- Utilize a R12AAEM306 Brace Arm Assembly. Refer to Page E1.1-45° for assembly details. A R12AAEM306 consists of an RCHFR12 Rod Capture Bracket for connection to the vertical support rod, an appropriate length of "EM3" EMT per Page E0.1 and an RCTFR bracket for connection to the overhead structure. See pg. D2.1SD23, brace anchorage designation. Match 1SD23812 Anchor Type from page D2 and page D2.1SD23 for 3/8" x 2" anchor.
- The Transverse Minimum Brace Anchorage is to be an L3 anchorage. Refer to Page D2 which indicates that for an L3 anchorage we may utilize a post installed anchor from one of the pre- approved manufacturers shown.
- Turn to Page B1.4 for a detail of the proper method for installation of the Transverse Brace Arm.
- Brace assembly capacities have been checked against LRD transverse design loads per pages F7, F7.1 and F7.6.

2. Continue reading across Table C11-05.45 for the minimum Longitudinal Brace Spacing Requirements:
    - At a maximum distance of 40 feet beyond the previous brace point and no more than 80 feet from the start of the run, install another Transverse Brace per the steps above.
    - At the same location, install a Longitudinal Restraint Device and (1) Longitudinal Brace Arm.
    - Utilize a R12AAEM406 Brace Arm Assembly.
    - The requirements for the Transverse Minimum Brace Anchorage are the same as stated above.
    - The Longitudinal Minimum Brace Anchorage is to be an L6 level anchorage. Refer to Page D2 which indicates that for an L6 anchorage we may utilize a post installed anchor from one of the pre-approved manufacturers shown.
    - Refer to Page B3.0, B3.1 or B3.3 for the proper installation detail for installing both the Transverse and Longitudinal brace arms at the same hanger location. See page D2.1SD23, brace anchorage designation. Match 1SD21218 anchor type from D2 and page D2.1SD23 for 1/2"x 3/8" anchor.
    - Brace assembly capacities have been checked against LRD longitudinal design loads per pages F7, F7.1 and F7.6.
3. Turn to pages G1 and G1.1 to determine Rod Stiffener requirements for the 1/2" diameter vertical support rod.

REVIEWED FOR CODE COMPLIANCE
HCAI
OPM-0403
BY: William Staehlin
DATE: 01-26-2024
CALIFORNIA BUILDING CODE 2022

EXAMPLE 2

Step One: Determine "Seismic Design Force"

Select an appropriate seismic restraint system for a 5th floor, non-vibration isolated rectangular duct weighing 33 pounds per lineal foot located in an 8-story essential hospital facility Hemet. The overhead deck is a form pour slab six inches thick consisting of minimum 4,000 psi normal weight concrete. The trapeze is 36" wide from center-to-center of the support rods and is suspended every 10 feet on center. The weight of the duct is distributed uniformly on the trapeze. For this example, we will elect to use rigid bracing installed at 45° from horizontal.

1. From the structural cover sheet of the contract drawings, the following information is used to complete the Structural Engineering Data section of the ISAT Project Worksheet.
   - Ip = 1.50 SDS = 1.146 Seismic Design Category: "F"
   - z = 75 feet h = 120 feet
2. Per ASCE 7-10, Table 13.6-1, for non-welded, non-vibration isolated HVAC duct use ap= 2.5, Rp = 6.0. You now have sufficient information to perform the SDF calculation as shown on the ISAT worksheet. Fp = 0.64g.

REVIEWED FOR CODE COMPLIANCE
ISAT
OPM-0403
BY: William Staehlin
DATE: 01-26-2024
UNIFORM BUILDING CODE 2022

Step Two: Determine the Correct Bracing Table

1. Divide the result by 1.4 to arrive at "Allowable Stress Design" for use in applying the ISAT Engineered Bracing Tables.
   - 0.64/1.4 = 0.46 g's
   - Round 0.46 g's up to 0.50.
2. Turn to Page C0.1.
   - From the index on Page C0.1 select Page C21-0.5-45, Bracing Table for maximum 0.50 g's horizontal force.
   - The Bracing Table indicates that the Page B30.0 or B33.0 bracing details are to be utilized for installation of 1-way transverse braces. Turning to these respective details, the user will see that the appropriate size duct trapeze element is to be selected from Page G2.
   - From Page G2 determine whether or not the trapeze may be constructed of "B1", 12 ga., 1-5/8 x 1-5/8 Single Channel for gravity loads. The trapeze vertical gravity load equals 330 pounds (33 pounds per lineal foot x 10 foot hanger spacing). Per Page G2 the Maximum Uniform Load for a 36" span of solid channel "B1" single channel = 940 pounds. For "B1" with 9/16" diameter punched holes, Maximum Uniform Load = 840 pounds. Therefore, from the B1 chart, B1 channel at a 36" span has adequate capacity. Use B1 as the trapeze element at transverse only seismic locations. Instructions for trapeze elements at longitudinal locations are provided at the end of this example.

EXAMPLE 2. CONTINUED

Step Three: Determine Brace Spacing, Brace Arms and Anchorage

1. From Page C21-0.5-45, select the row corresponding to a maximum trapeze weight of 35 lbs/lf .
2. To meet the minimum Transverse Bracing Requirements:
    - Minimum support rod diameter to be 5/8”. Trapeze spacing to be 10 feet o.c. maximum.
    - Install a single Transverse Brace on one of the 2 support rods.
    - Maximum Brace Spacing to be 30 feet.
    - Utilize R58AAEM506 Brace Arm Assemblies. Refer to Page B30.0 for assembly details. A R58AAEM506 consists of an RCTFR58 Rod Capture Bracket for connection to the trapeze, an appropriate length of EM5 EMT per Page E0.1 and an RCTFR bracket for connection to the overhead structure.
    - The Transverse Minimum Brace Anchorage is to be a N9 anchorage. Refer to Page D1 which indicates that for an N9 anchorage we may utilize post installed anchors from one of the pre-approved manufacturers shown. See page D1.1SD24, brace anchorage designation. Match 1SD25819 anchor type from D1 and page D1.1SD24 for 5/8” x 3 1/4” anchors.
    - Refer to Page B30.0 for the proper method for installation of the Transverse Brace Arm.
3. To meet the minimum Longitudinal Brace Spacing Requirements, continue reading across the Table for the minimum Longitudinal Brace Spacing Requirements. Refer to Page B30.2 for assembly details.
    - At a maximum distance of 60 feet beyond the previous brace point, install another brace per the steps above.
    - At the same location, install (2) R58AAEM506 Longitudinal Brace Arm Assemblies, one to each rod. A R58AAEM506 consists of an RCTFR58 Rod Capture Bracket for connection to the trapeze, an appropriate length of EM5 EMT per Page E0.1 and an RCTFR bracket for connection to the overhead structure.
    - The Longitudinal Minimum Brace Anchorage is to be an N11 anchorage. Refer to Page D1 which indicates that for an N11 anchorage we may utilize a PIP Blue Banger Hanger cast-in- place deck insert or post installed anchors from one of the pre-approved manufacturers shown. See page D1.1SD24, brace anchorage designation. Match 1SD25824 anchor type from D1 and page D1.1SD24 for 5/8” x 4 1/4” anchors.
    - Turn to Page B30.2 for the proper method for installing the Transverse and Longitudinal Brace Arms.

REVIEWED FOR CODE COMPLIANCE
HCAI
OPM-0403
BY: William Staehlin
DATE: 01-26-2024
CALIFORNIA BUILDING CODE 2022

EXAMPLE 2. CONTINUED

4. Turn to Page G1 to determine Rod Stiffening requirements for the 5/8” diameter vertical support rod at all Transverse and Longitudinal Brace Locations.
5. Because, by code, bi-axial bending of the trapeze strut must be considered, at trapeze locations with longitudinal bracing the trapeze strut member must be sized using information from the G3 page series. From Bracing Table Page C21-0.5-45 we know that the maximum longitudinal brace spacing is 80 feet. From the G3-Series pages with G = 0.60, a 8 x longitudinal brace spacing and a total load of 330 pounds we find that the section best meeting these requirements is “B2” channel rated for 330 pounds per Page G3.2 with a max span of 36 inches.

REVIEWED FOR CODE COMPLIANCE
HCAi
OPM-0403
BY: William Staehlin
DATE: 01-26-2024
CALIFORNIA BUILDING CODE, 2022

SEISMIC BRACING NOTES

SUSPENDED ELECTRICAL SYSTEMS

1. In compliance with the 2013 CBC, seismic bracing is to be installed for all suspended distributed electrical systems and suspended electrical equipment per ISAT's engineered bracing tables, ISAT's installation details and the following criteria.

BRACING REQUIREMENTS FOR ELECTRICAL SERVICES		
Seismic Design Category	**I_P [a]**	**Service Bracing Requirements**
D, E, F	≥1.0	Brace Conduit > 2-1/2" Trade Size or Brace Trapeze (Refer to CBC 2013 Section 1616A.1.23 for Additional Requirements) Assemblies Supporting Raceways ≥ 10 lbs/lf
EXCEPTIONS	ALL	Light Fixtures Suspended From the Structure Having Attachments Designed To Accommodate 1.4 x Weight In Both the Vertical and Horizontal Directions and With 360° Range of Motion. And In-Lay Ceiling Grid Light Fixtures < 56 Lbs With Safety Wires Per ASTM E580. Refer to ASCE 7-10 Section 13.6.1, ASTM E580 & 2013 CBC 1616A.1.20 for additional requirements.

a. I_p = Component Importance Factor.

REVIEWED FOR CODE COMPLIANCE
OPM-0403
BY: William Staehlin
DATE: 01-26-2024
CALIFORNIA BUILDING CODE, 2022

2. Where bracing is allowed to be omitted, connections between any fixed juncture, equipment or component are to be installed with adequate flexibility to accommodate differential displacements.

3. Conduit > 2.5" connected to panels, cabinets or other equipment to be installed with flexible connections or designed for seismic forces and seismic relative displacements.

4. For Seismic Design Categories D, E or F, brace suspended components where component I_p > 1.0. Component Importance Factors are those assigned by the design team, not ISAT. Component importance factor, I_p, for design of supports and attachments shall be in accordance with the CBC 2013 Section 1616A.1.17 for OSHPD 1 & 4 buildings. Component importance factor, I_p, for OSHPD 2 buildings shall be in accordance with ASCE 7-10 Section 13.1.3.

5. Where the actual weight of the conduit plus conductor is unknown, refer to ISAT's conduit weight charts, Section X.

SEISMIC BRACING NOTES

SUSPENDED ELECTRICAL SYSTEMS (CONTINUED)

6. Seismic design is not required for:

   a. Components weighing ≤ 20 lbs or distributed systems ≤ 5 lb/lf that have flexible connections between the equipment and associated utilities, where components are positively attached to structure.

   b. Floor supported components weighing less than 400 lbs., with a center of mass located 4 ft or less above the adjacent floor, the component is attached via flexible connections between itself and associated utilities (conduit, piping, etc.) and the component is positively attached to the floor *(CBC 2013 Section 1616A.1.18)* except components requiring Special Seismic Certification.

7. Seismic restraints are not required for conduit, cable trays and other electrical distributed systems (raceways) if the following conditions are met for the full length of the run *(CBC 2013 Section 1616A.1.23)*:

   a. The raceway is supported by hangers and each hanger in the raceway run is 12 in. or less from the raceway support point to the overhead supporting structure.

   b. When rod hangers are used with a diameter greater than 3/8 in. they shall be equipped with swivels to prevent inelastic bending in the rod.

   c. Provisions are made for raceways to accommodate expected deflections.

8. Tests, Special Inspections and Observations (TIO) shall be in accordance with OSHPD approved TIO form.

9. Brace spacing shall not exceed the maximum allowable brace spacing as engineered by ISAT. Refer to individual ISAT bracing charts compiled by conduit size or trapeze weight. See C-Series pages.

10. All seismic bracing assemblies shall utilize ISAT supplied, proprietary, seismic brackets unless noted otherwise. Any substitution shall be subject to ISAT review and OSHPD approval.

REVIEWED FOR CODE COMPLIANCE
OPM-0403
BY: William Staehlin
DATE: 01-26-2024
CALIFORNIA BUILDING CODE, 2022

SEISMIC BRACING NOTES

SUSPENDED ELECTRICAL SYSTEMS (CONTINUED)

11. Every raceway which requires bracing shall have a minimum of two transverse braces and one longitudinal brace. For the purposes of this Manual, a “run” is defined as suspended raceway of 10 foot minimum straight length.

12. A longitudinal brace at a 90 degree change in direction may act as a transverse brace if it is within 2 feet of the change in direction or located within prescribed distances from the change in direction as shown on pages A6.0 and A6.1. The brace arm and anchorage must be sized to meet or exceed the requirements of the total brace reaction. A brace arm for a smaller distributed utility is not to be utilized as transverse or longitudinal brace for an adjoining run of a larger distributed utility.

13. A transverse brace at a 90 degree change in direction may act as a longitudinal brace if it is within 2 feet of the change in direction or located within prescribed distances from the change in direction as shown on pages A6.0 and A6.1. The brace arm and anchorage must be sized to meet or exceed the requirements of the total brace reaction. A brace arm for a smaller distributed utility is not to be utilized as transverse or longitudinal brace for an adjoining run of a larger distributed utility.

14. A transverse brace for a smaller raceway is not to be utilized as the longitudinal brace for an adjoining run of a larger raceway. A longitudinal brace for a smaller raceway is not to be utilized as the transverse brace for an adjoining run of a larger raceway.

15. All longitudinal brace locations, for individually supported conduit, shall employ an ISAT Longitudinal Restraint Device (LRD) as illustrated on F7 series pages and installed per the individual detail drawings within section B of the manual.

16. Standard supports in accordance with ASME B31, NFPA 13 or MSS SP-58 designed by tested load rating or analysis considering all loads are acceptable. There shall be a vertical support within 12’’ of all seismic braces to ensure a seismic load path.

17. Vertical support spacing for electrical components is to be the lesser of 10 foot maximum, or the minimum as dictated by the California Electrical Code, 2013 (CEC 2013), as listed in the project specifications, or as allowed by the local code authority.

18. Each layer of a multi-layer trapeze rack shall be braced individually based on the weight of the individual layer, or as specifically engineered by ISAT. Layers supporting loads < 10 lbs/lf need not be braced provided that the load is accounted for in the nearest braced layer.

REVIEWED FOR CODE COMPLIANCE
OPM-0403
BY: William Staehlin
DATE: 01/26/2024
CALIFORNIA BUILDING CODE, 2019

REGISTERED PROFESSIONAL ENGINEER
MARCIN WASAZNIK
S 6612
STRUCTURAL
STATE OF CALIFORNIA

ISAT
A Division of Tomarco Contractor Specialties

International Seismic Application Technology
14848 Northam Street, La Mirada, CA 90638
877-999-4728 (Toll Free) 714-523-0845 (fax)
www.isatsb.com

SEISMIC BRACING NOTES

SUSPENDED ELECTRICAL SYSTEMS (CONTINUED)

19. When used to construct a rigid brace arm assembly, minimum 12 gauge steel channel shall be solid, punched or short slot channel. Brace arm design values shown on Page E1.1 and E1.2.

20. When using back-to-back 12 gauge steel channel as a trapeze assembly, raceways may be mounted to both the top and the underside provided the limitations of Page G2 and G3 are not exceeded.

21. When using back-to-back 12 gauge steel channel as a trapeze assembly, raceways may be mounted to both the top and the underside provided the limitations of Page G2 and G3 are not exceeded.

22. Batteries on racks shall have wrap-around restraints with spacers between restraints and cells. Refer to ASCE 7-10 Section 13.6.4 Item #3.

23. Pull boxes in-line with conduit are not electro-mechanical devices and are not required to be seismically braced unless otherwise called for in the construction documents. Brace pull boxes greater than 75 lbs.

REVIEWED FOR CODE COMPLIANCE
HCAi
OPM-0403
BY: William Staehlin
DATE: 01-26-2024
CALIFORNIA BUILDING CODE, 2022

REGISTERED PROFESSIONAL ENGINEER
MARCIN WASAZNIK
S-6612
STRUCTURAL
STATE OF CALIFORNIA

ISAT
A Division of Tomarco Contractor Specialties

International Seismic Application Technology
14848 Northam Street, La Mirada, CA 90638
877-999-4728 (Toll Free) 714-523-0845 (fax)
www.isatsb.com

SEISMIC BRACING NOTES

SUSPENDED MECHANICAL PIPING

1. In compliance with the 2013 CBC, seismic bracing is to be installed on all suspended pipe and equipment per ISAT's engineered bracing tables, ISAT's installation details and the following criteria:

BRACING REQUIREMENTS FOR MECHANICAL PIPING SERVICES		
Seismic Design Category	**I_P [a]**	**Service Bracing Requirements**
Steel or Copper Piping Systems [b]		
D, E, F	1.0	Brace All Pipe > 3" Diameter
	1.5	Brace All Pipe > 1" Diameter Exceptions: Single Hung Pipe With Non-Hazardous Content With An Operating Weight ≤ 5 Lbs/Lf: - Sch. 40 Steel Vent Lines ≤ 2" Diameter - Full Sch. 40 Steel Lines ≤ 1-1/2" Diameter - Copper Vent Lines < 3-1/2" Diameter - Full Copper Lines ≤ 2" Diameter
	All	Brace All Trapeze Assemblies Supporting Loads ≥ 10 Lbs/Lf And No Single Pipe Exceeds The Limits in 1616A.1.26 ASCE 7, 13.6.8.3(3a) & (3b)
EXCEPTIONS	All	Piping Systems Designed And Braced in Accordance with ASCE 7, Section 13.6.8.1
Cast Iron Piping Systems [b]		
D, E, F	All	Brace All Pipe With Non-Hazardous Content With An Operating Weight > 5 Lbs/Lf: - No-Hub Cast Iron Gravity Lines > 2" Diameter - No-Hub Cast Iron Vent Lines, Storm Drains & Overflow Drains > 3" Diameter

a. I_p = Component Importance Factor.
b. Use of flexible connectors required between un-braced piping and components.

1.1. For Seismic Design Categories D, E or F, brace suspended components where component Ip > 1.0. Component Importance Factors are those assigned by the design team, not ISAT. Component importance factor, Ip, for design of supports and attachments shall be in accordance with the CBC 2013 Section 1616A.1.17 for OSHPD 1 & 4 buildings. Component importance factor, Ip, for OSHPD 2 buildings shall be in accordance with ASCE 7-10 Section 13.1.3.

REVIEWED FOR CODE COMPLIANCE
HCAI
OPM-0403
BY: William Staehlin
DATE: 01-26-2024
CALIFORNIA BUILDING CODE 2022

REGISTERED PROFESSIONAL ENGINEER
MARCIN WASAZNIK
S 6612
STRUCTURAL
STATE OF CALIFORNIA

ISAT
A Division of Tomarco Contractor Specialties

International Seismic Application Technology
14848 Northam Street, La Mirada, CA 90638
877-999-4728 (Toll Free) 714-523-0845 (fax)
www.isatsb.com

SEISMIC BRACING NOTES

SUSPENDED MECHANICAL PIPING (CONTINUED)

2. Where the component does not convey hazardous content, seismic design is not required for:

   a. Components weighing ≤ 20 lbs or distributed systems ≤ 5 lbs/lf ($I_p \geq 1.0$, CBC) that have flexible connections between the equipment and associated utilities, where components are positively attached to structure, except components requiring Special Seismic Certification *(2013 CBC, 1616A.1.18).*

   b. Components weighing less than 400 lbs., with a center of mass located 4 ft or less above the adjacent floor or roof, the component is attached via flexible connections between itself and associated utilities (conduit, piping, etc.) and the component is positively attached to the floor or roof *(2013 CBC, 1616A.1.18)* except components requiring Special Seismic Certification.

3. For any situation in which seismic bracing is allowed to be omitted, flexible connections are to be provided between the components and piping. Provisions are to be made to avoid or protect the pipe from impact.

4. Un-braced, suspended piping attached to components is to be installed with adequate flexibility to accommodate differential displacements.

5. Seismic restraints are not required for piping components if the following conditions are met for the full length of the run:

   a. The piping is supported by hangers and each hanger from the top of the pipe is 12 in. or less in length to the supporting structure for single hung pipe or the hangers are 12 in. or less for trapeze hangers.

   b. When rod hangers are used (> 3/8" dia., CBC), they shall be equipped with swivels to prevent inelastic bending in the rod.

6. For the purpose of calculating weight, pipe weights are to be the operating weights, include weight of pipe insulation as required. If actual pipe weight is unknown, refer to pipe weight charts in Section X.

7. Tests, Special Inspections and Observations (TIO) shall be in accordance with OSHPD approved TIO form.

8. Brace spacing shall not exceed the maximum allowable brace spacing as engineered by ISAT. Refer to individual ISAT bracing charts compiled by pipe size or trapeze weight. See Index Page C.0.

REVIEWED FOR CODE COMPLIANCE
ICAI
OPM-0403
BY: William Staehlin
DATE: 01-26-2024
CALIFORNIA BUILDING CODE, 2022

SUSPENDED MECHANICAL PIPING (CONTINUED)

9. When calculating seismic design force for pipes constructed of low deformability materials such as cast iron, the value $R_p = 3.0$ (e.g. cast iron piping with non-flexible connections) is to be utilized. For drain, waste and vent piping, the value $R_p = 2.5$ (e.g. cast iron piping with flexible connections) is to be utilized.

10. All seismic bracing assemblies shall utilize ISAT supplied, proprietary seismic brackets unless noted otherwise. Any substitution shall be subject to ISAT review and OSHPD approval.

11. Every pipe run which requires bracing shall have a minimum of two transverse braces and one longitudinal brace. For the purposes of this *Manual*, a "run" is defined as suspended piping of 10 foot minimum straight length.

12. Rigid grooved coupling listed for UL Standard 213 shall be permitted in horizontal run of pipe. Flexible grooved coupling listed for UL Standard 213 shall be permitted in vertical risers (to accommodate drift) and other locations (e.g. seismic separation, equipment nozzle, etc.) to accommodate small movement and/or rotation. Non-UL listed groove couplings shall not be used unless approved on project specific basis. Exception: Cast-iron (no-hub pipe) brace spacings shall be in accordance with ASTM C1540, shall be certified in accordance with FM 1680 Class 1 and gravity hangers shall be spaced per the requirements of Table 313.1 of the 2013 California Plumbing Code (CPC 2013) for no-hub cast iron pipe.

13. A longitudinal brace at a 90 degree change in direction may act as a transverse brace if it is within 2 feet of the change in direction or located within prescribed distances from the change in direction as shown on pages A4.0 through A5.1. The brace arm and anchorage must be sized to meet or exceed the requirements of the total brace reaction. A brace arm for a smaller distributed utility is not to be utilized as transverse or longitudinal brace for an adjoining run of a larger distributed utility.

14. A transverse brace at a 90 degree change in direction may act as a longitudinal brace if it is within 2 feet of the change in direction or located within prescribed distances from the change in direction as shown on pages A4.0 through A5.1. The brace arm and anchorage must be sized to meet or exceed the requirements of the total brace reaction. A brace arm for a smaller distributed utility is not to be utilized as transverse or longitudinal brace for an adjoining run of a larger distributed utility.

15. A transverse brace for a smaller pipe is not to be utilized as the longitudinal brace for an adjoining run of larger pipe. A longitudinal brace for a smaller pipe is not to be utilized as the transverse brace for an adjoining run of larger pipe except when specifically engineered by ISAT technical support.

REVIEWED FOR CODE COMPLIANCE BY HCAI
OPM-0403
BY: William Staehlin
DATE: 01-26-2024
CALIFORNIA BUILDING CODE

SEISMIC BRACING NOTES

SUSPENDED MECHANICAL PIPING (CONTINUED)

16. Except where transverse braces are acting as a longitudinal brace at a change in direction, all longitudinal brace locations, for individually supported pipe, shall employ an ISAT Longitudinal Restraint Device (LRD) as illustrated on F7 series pages and installed per the individual detail drawings within section B of the manual.

17. Standard supports in accordance with ASME B31, NFPA 13 or MSS SP-58 designed by tested load rating or analysis considering all loads are acceptable. There shall be a vertical support within 12'' of all seismic braces to ensure a seismic load path.

18. Vertical support spacing for trapeze mounted pipe runs is to be the lesser of 10 foot maximum or the maximum as dictated by the CPC 2013 or CMC 2013, as listed in the project specifications.

19. Each layer of a multi-layer trapeze rack shall be braced individually based on the weight of the individual layer, or as specifically engineered by ISAT. Layers supporting loads < 10 lbs/lf need not be braced provided that the load is accounted for in the nearest braced layer.

20. This OPM is limited to seismic bracing of interior pipes only. It does not address other loads such as, but not limited to, those generated by thermal growth, pressure, fluid dynamics, pipe rupture, or movement of equipment to which brace components are attached. It does not address components that cross seismic separation of buildings. Nor does it address components (other than pipe risers) attached to portions of the structure or equipment that will experience relative seismic displacement. Project specific design and OSHPD approval shall be required for design not covered by the OPM.

21. When used to construct a rigid brace arm assembly, minimum 12 gauge steel channel shall be solid, punched or short slot channel. Brace arm design values shown on Page E1.1 and E1.2.

22. Vertical pipe systems supported at each floor shall be considered seismically braced if the pipe has a riser clamp or bracket appropriately designed for seismic and vertical loads or if the penetration through each floor is tightly packed with approved insulation or firestops, satisfying NFPA 13-13 Section 9.3.5.8.5 and floor to floor spacing does not exceed maximum spacing tabulated in the C-series Bracing tables. Tops of risers exceeding 3 ft. shall be provided with supports or bracing appropriately designed. Where this bracing is attached to the horizontal piping, it shall be installed within 2 ft. of the riser.

REVIEWED FOR CODE COMPLIANCE
ICC-ES
OPM-0403
By: William Staehlin
DATE: 01/26/2024
CALIFORNIA BUILDING CODE

SUSPENDED MECHANICAL PIPING (CONTINUED)

23. Re-insulate any locations where pipe insulation had been originally removed for direct attachment of Longitudinal Restraint Devices (LRD) to single hung pipe.

24. When using back-to-back 12 gauge steel channel as a trapeze assembly, pipe may be mounted to both the top and the underside provided the limitations of Page G2 and G3 are not exceeded.

VIBRATION ISOLATED PIPING

1. ISAT includes designs for the seismic restraint of vibration isolated piping suspended from spring hangers. However, design of the vibration isolated support system itself must be accomplished separately on a job specific basis by a qualified engineer. Hanger design shall satisfy overstrength factor (Ω_0) in accordance with ASCE7, as amended in 2016 CBC section 1616A.1.23 and springs must have OSHPD approval for strength and stiffness.

2. Install vibration isolation hardware per manufacturer's instructions to achieve the required degree of isolation and/or deflection.

3. Vibration isolated hangers that also require seismic bracing shall be braced using galvanized steel cable or minimum 12 gage hanging wire tied to ISAT designed and tested seismic brackets.

4. Cable to be installed with sufficient slack to accommodate, but not exceed, the vibration isolators calculated deflection. See manufacturer's vibration isolator specifications. Do not tension cables to the extent that they support gravity loads. Cable installation is to be symmetrical.

REVIEWED FOR CODE COMPLIANCE
HCAi
BY: William Staehlin
DATE: 01-26-2024
CALIFORNIA BUILDING CODE 2022

SEISMIC BRACING NOTES

HVAC DUCT AND MECHANICAL COMPONENTS

1. In compliance with the 2013 CBC, seismic bracing is to be installed on all suspended HVAC duct runs and mechanical components per ISAT's engineered bracing tables, ISAT's installation details and the following criteria.

BRACING REQUIREMENTS FOR SUSPENDED HVAC DUCT AND MECHANICAL COMPONENTS		
Seismic Design Category	**I_P [a]**	**Service Bracing Requirements**
D, E, F	> 1.0	Brace All Duct Designed To Carry Or Convey Toxic, Highly Toxic Or Flammable Gases Or Used For Smoke Control.
	≥ 1.0	Brace All Duct Having A Cross-Sectional Area > 6 ft^2

a. I_p = Component Importance Factor.

1.1. For Seismic Design Categories D, E or F, brace suspended components where component I_p > 1.0. Component Importance Factors are those assigned by the design team, not ISAT. Component importance factor, I_p, for design of supports and attachments shall be in accordance with the CBC 2013 Section 1616A.1.17 for OSHPD 1 & 4 buildings. Component importance factor, I_p, for OSHPD 2 buildings shall be in accordance with ASCE 7-10 Section 13.1.3.

2. Where component I_p = 1.0, seismic restraints are not required for:

   a. Components weighing ≤ 20 lbs or distributed systems ≤ 5 lbs/lf (I_p ≥ 1.0, *CBC*) having flexible connections between equipment and associated utilities, where components are positively attached to structure, except components requiring Special Seismic Certification *(2013 CBC, 1616A.1.18)*.

   b. Floor supported components weighing less than 400 lbs., with a center of mass located 4 ft or less above the adjacent floor, the component is attached via flexible connections between itself and associated utilities (conduit, piping, etc.) and the component is positively attached to the floor *(2013 CBC, 1616A.1.18)* except components requiring Special Seismic Certification.

REVIEWED FOR CODE COMPLIANCE
HCAi
OPM-0403
BY: William Staehlin
DATE: 01-26-2024
CALIFORNIA BUILDING CODE, 2022

HVAC DUCT AND MECHANICAL COMPONENTS (CONTINUED)

3. Components that are installed in-line with the duct system and have an operating weight greater than 75 lbs (334N), such as fans, heat exchangers and humidifiers, shall be supported and laterally braced independent of the duct system. If the in-line device requires special seismic certification or use an OSP (OSHPD Special Seismic Certification Preapproval per OSHPD PIN 55), support & lateral brace shall be provided as specified in the certification or OSP document, regardless of the in-line duct device operating weight. (Exception: VAV/CAV boxes up to 75 lbs.)

4. Bracing for suspended components installed in-line with the duct system not designed to convey, support or otherwise contain toxic, highly toxic or explosive substances, flammable gasses or are used for smoke control is not required where the operating weight is less than or equal to 75 lbs.

   Note: If the in-line duct device requires special seismic certification or an OSHPD OSP,
   support and lateral bracing shall be provided as specified in the certification or OSP document, regardless of the in-line duct device operating weight. (Exception: VAV/CAV boxes up to 75 lbs.)

5. Components or equipment that are installed in-line with the duct system and have an operating weight less than or equal to 75 lbs. such as fans, heat exchangers, humidifiers and VAV/CAV/ATU boxes, etc. and are directly connected to the ductwork on each end (no flexible connections) may be considered part of the duct run and do not require independent support and seismic bracing if the weight of the duct on each side of the component equals or exceeds the weight of the component; or if the duct is braced with the mass of the in-line component considered in the forces tributary to the adjacent braces. Unbraced piping attached to in-line components or equipment shall be provided with adequate flexibility (e.g. flexible connections or (3) 90 degree elbows) to accommodate the seismic relative displacements.

6. Per ASCE 7-10, Section 13.4.1, do not use an R_p factor greater than 6.0 when calculating F_p and F_{pv} for design of the attachment.

7. Seismic restraints are not required for duct components if the following conditions are met for the full length of the run:

   a. The duct is supported by hangers and each hanger in the run is 12 in. or less in length from the duct support point to the overhead supporting structure.

   b. When rod hangers are used (> 3/8” dia., CBC), they shall be equipped with swivels to prevent inelastic bending in the rod.

REVIEWED FOR CODE COMPLIANCE
OPM-0403
BY: William Staehlin
DATE: 01-26-2024
CALIFORNIA BUILDING CODE

HVAC DUCT AND MECHANICAL COMPONENTS (CONTINUED)

8. Design duct for the displacements across seismic joints, regardless of size, weight or where hanger length ≤ 12 inches.

9. Where bracing is allowed to be omitted:

   a. Flexible connections are required between any fixed juncture or component and the connecting HVAC duct.

   b. Provisions are to be made to avoid impact with larger ducts or mechanical components or to protect the ducts in the event of impact.

10. All trapeze assemblies supporting ducts shall be braced considering the total weight of the duct(s) and insulation on the trapeze. If the actual weight of the duct is unknown, refer to Duct Weight Charts, Section X.

11. All seismic bracing assemblies shall utilize ISAT supplied, proprietary seismic brackets unless noted otherwise. Any substitution shall be subject to ISAT review and OSHPD approval.

12. Brace spacing shall not exceed the maximum allowable brace spacing as engineered by ISAT. Refer to individual ISAT bracing charts compiled by duct trapeze weight. See Index Page C0.1.

13. Every HVAC duct run which requires bracing shall have a minimum of two transverse braces and one longitudinal brace. For the purposes of this *Manual*, a run is defined as a suspended element of 10 foot minimum straight length.

14. A rigid transverse brace shall be installed on one side of a horizontal 90 degree change in duct direction.

15. A transverse brace may act as a longitudinal brace if it is located within two duct widths of a 90 degree change in direction, if the brace arm and anchor have been sized to meet or exceed the requirements of the longitudinal brace and the transverse brace is installed on the larger of the two ducts or as engineered by ISAT technical support.

16. A longitudinal brace may act as a transverse brace if it is located within two duct widths of a 90 degree change in direction, if the brace arm and anchor have been sized to meet or exceed the requirements of the transverse brace and the longitudinal brace is installed on the larger of the two ducts or as engineered by ISAT technical support.

17. Tests, Special Inspections and Observations (TIO) shall be in accordance with OSHPD approved TIO form.

REVIEWED FOR CODE COMPLIANCE
OPM-0403
BY: William Staehlin
DATE: 01-26-2024
CALIFORNIA BUILDING CODE, 2022

SEISMIC BRACING NOTES

HVAC DUCT AND MECHANICAL COMPONENTS (CONTINUED)

18. Flexible connections at walls are not allowed as Transverse Brace locations.

19. Where a duct passes through a wall may be considered a transverse brace location provided the duct is tightly constrained and it is a rigid connection. The ability of a breakaway smoke damper to act as a transverse brace location is to be evaluated on a case-by-case basis. The Engineer of Record or the Project Architect must verify the ability of the wall to accommodate the transverse seismic load.

20. Vertical support spacing for trapeze mounted duct is to be the lesser of 10 foot maximum, or the maximum as dictated by the California Mechanical Code.

21. Each layer of a multi-layer trapeze rack shall be braced individually based on the weight of the individual layer, or as specifically engineered by ISAT. Layers supporting
loads < 10 lbs/lf need not be braced provided that the load is accounted for in the nearest braced layer.

22. All vertical riser ducts shall include engineered lateral restraint and vertical supports at the top and bottom of the riser and at each intermediate floor not to exceed a maximum interval from the C-series Bracing Tables. The lateral seismic restraint and the vertical support shall be engineered on an individual project basis.

23. Vertical risers which are mechanically attached to floors at the point of penetration are considered a transverse and longitudinal brace location when the supports and anchorages are sized to accommodate the lateral load.

24. When used to construct a rigid brace arm assembly, minimum 12 gauge steel channel shall be solid, punched or short slot channel. Brace arm design values shown on Page E1.1 and E1.2.

REVIEWED FOR CODE COMPLIANCE
HCAI
BY: William Staehlin
DATE: 01-26-2024
CALIFORNIA BUILDING CODE, 2022

SEISMIC BRACING NOTES

VIBRATION ISOLATED HVAC DUCT AND MECHANICAL COMPONENTS

1. ISAT includes designs for the seismic restraint of vibration isolated piping suspended from spring hangers. However, design of the vibration isolated support system itself must be accomplished separately on a job specific basis by a qualified engineer. Hanger design shall satisfy overstrength factor (Ω_0) in accordance with ASCE7, as amended in 2016 CBC section 1616A.1.23 and springs must have OSHPD approval for strength and stiffness.

2. Install vibration isolation hardware per manufacturer's instructions to achieve the required degree of isolation and/or deflection.

3. Vibration isolated hangers that also require seismic bracing shall be braced using galvanized steel cable or minimum 12 gage hanging wire tied to ISAT designed and tested seismic brackets.

4. Cable to be installed with sufficient slack to accommodate, but not exceed, the vibration isolators calculated deflection. See manufacturer's vibration isolator specifications. Do not tension cables to the extent that they support gravity loads. Cable installation is to be symmetrical.

REVIEWED FOR CODE COMPLIANCE
OPM-0403
BY: William Staehlin
DATE: 01-26-2024
CALIFORNIA BUILDING CODE, 2022

REGISTERED PROFESSIONAL ENGINEER
MARCIN WASAZNIK
S-6612
STRUCTURAL
STATE OF CALIFORNIA

ISAT
A Division of Tomarco Contractor Specialties

International Seismic Application Technology
14848 Northam Street, La Mirada, CA 90638
877-999-4728 (Toll Free) 714-523-0845 (fax)
www.isatsb.com

SEISMIC BRACING NOTES

SUSPENDED PLUMBING PIPING

1. In compliance with the 2013 CBC, seismic bracing is to be installed on all suspended pipe and equipment per ISAT's engineered bracing tables, ISAT's installation details and the following criteria:

BRACING REQUIREMENTS FOR PLUMBING PIPING SERVICES		
Seismic Design Category	**I_P [a]**	**Service Bracing Requirements**
Steel or Copper Piping Systems [b]		
D, E, F	1.0	Brace All Pipe > 3" Diameter Except Pipe With An Operating Weight ≤ 5 Lbs/Lf
	>1.0	Brace All Pipe > 1" Diameter Exceptions: Pipe With Non-Hazardous Content With An Operating Weight ≤ 5 Lbs/Lf: - Sch. 40 Steel Vent Lines ≤ 2" Diameter - Full Sch. 40 Steel Lines ≤ 1-1/2" Diameter - Copper Vent Lines < 3-1/2" Diameter - Full Copper Lines ≤ 2" Diameter
	≥1.0	Brace All Trapeze Assemblies Supporting Loads ≥ 10 Lbs/Lf And No Single Pipe Exceeds The Limits in 1616A.1.26 ASCE 7, 13.6.8.3 (3a) & (3b)
EXCEPTIONS	All	Piping Systems Designed And Braced in Accordance with ASCE 7, Section 13.6.8.1
Cast Iron Piping Systems [b]		
D, E, F	All	Brace All Pipe With Non-Hazardous Content With An Operating Weight > 5 Lbs/Lf: - No-Hub Cast Iron Gravity Lines > 2" Diameter - No-Hub Cast Iron Vent Lines, Storm Drains & Overflow Drains > 3" Diameter

a. I_p = Component Importance Factor.
b. Use of flexible connectors required between un-braced piping and components.

1.1. For Seismic Design Categories D, E or F, brace suspended components where component Ip > 1.0. Component Importance Factors are those assigned by the design team, not ISAT. Component importance factor, Ip, for design of supports and attachments shall be in accordance with the CBC 2013 Section 1616A.1.17 for OSHPD 1 & 4 buildings. Component importance factor, Ip, for OSHPD 2 buildings shall be in accordance with ASCE 7-10 Section 13.1.3.

REVIEWED FOR CODE COMPLIANCE
HCAI
OPM-0403
BY: Michael Chen
DATE: 01-26-2024
CALIFORNIA BUILDING CODE 2022

SEISMIC BRACING NOTES

SUSPENDED PLUMBING PIPING (CONTINUED)

2. Seismic design is not required for:

   a. Components weighing ≤ 20 lbs. or distributed systems ≤ 5 lbs/lf that have flexible connections between the equipment and associated utilities, where components are positively attached to structure.

   b. Floor supported components weighing less than 400 lbs., with a center of mass located 4 ft or less above the adjacent floor, the component is attached via flexible connections between itself and associated utilities (conduit, piping, etc.) and the component is positively attached to the floor *(CBC 2013 Section 1616A.1.18)* except components requiring Special Seismic Certification.

3. For any situation in which seismic bracing is allowed to be omitted, flexible connections are to be provided between the components and piping. Provisions are to be made to avoid or protect the pipe from impact.

4. Un-braced, suspended piping attached to components is to be installed with adequate flexibility to accommodate differential displacements.

5. Seismic restraints are not required for piping components if the following conditions are met for the full length of the run:

   a. The piping is supported by hangers and each hanger from the top of the pipe is 12 in. or less in length to the supporting structure for single hung pipe or the hangers are 12 in. or less for trapeze hangers.

   b. When rod hangers are used (> 3/8" dia., CBC), they shall be equipped with swivels to prevent inelastic bending in the rod.

6. For the purpose of calculating weight, pipe weights are to be the operating weights, include weight of pipe insulation. If actual pipe weight is unknown, refer to pipe weight charts in Section X.

7. Tests, Special Inspections and Observations (TIO) shall be in accordance with OSHPD approved TIO form.

8. Brace spacing shall not exceed the maximum allowable brace spacing as engineered by ISAT. Refer to individual ISAT bracing charts compiled by pipe size or trapeze weight. See Index Page C.0.

REVIEWED FOR CODE COMPLIANCE
HCAi
BY: William Staehlin
DATE: 01-26-2024
CALIFORNIA BUILDING CODE 2022

SUSPENDED PLUMBING PIPING (CONTINUED)

9. When calculating seismic design force for pipes constructed of low deformability materials such as cast iron, the value $R_p = 3.0$ (e.g. cast iron piping with non-flexible connections) is to be utilized. For drain, waste and vent piping, the value $R_p = 2.5$ (e.g. cast iron piping with flexible connections) is to be utilized.

10. All seismic bracing assemblies shall utilize ISAT supplied, proprietary seismic brackets unless noted otherwise. Any substitution shall be subject to ISAT review and OSHPD approval.

11. Every pipe run which requires bracing shall have a minimum of two transverse braces and one longitudinal brace. For the purposes of this *Manual*, a "run" is defined as suspended piping of 10 foot minimum straight length.

12. Rigid grooved coupling listed for UL Standard 213 shall be permitted in horizontal run of pipe. Flexible grooved coupling listed for UL Standard 213 shall be permitted in vertical risers (to accommodate drift) and other locations (e.g. seismic separation, equipment nozzle, etc.) to accommodate small movement and/or rotation. Non-UL listed groove couplings shall not be used unless approved on project specific basis.

13. A longitudinal brace at a 90 degree change in direction may act as a transverse brace if it is within 2 feet of the change in direction or located within prescribed distances from the change in direction as shown on pages A4.0 through A5.1. The brace arm and anchorage must be sized to meet or exceed the requirements of the total brace reaction.

14. A transverse brace at a 90 degree change in direction may act as a longitudinal brace if it is within 2 feet of the change in direction or located within prescribed distances from the change in direction as shown on pages A4.0 through A5.1. The brace arm and anchorage must be sized to meet or exceed the requirements of the total brace reaction.

15. A transverse brace for a smaller pipe is not to be utilized as the longitudinal brace for an adjoining run of larger pipe. A longitudinal brace for a smaller pipe is not to be utilized as the transverse brace for an adjoining run of larger pipe except when specifically engineered by ISAT technical support.

16. Except where transverse braces are acting as a longitudinal brace at a change in direction, all longitudinal brace locations, for individually supported pipe, shall employ an ISAT Longitudinal Restraint Device (LRD) as illustrated on F7 series pages and installed per the individual detail drawings within section B of the manual.

REVIEWED FOR CODE COMPLIANCE
OPM-0403
BY: William Staehlin
DATE: 01-26-2024
CALIFORNIA BUILDING CODE 2022

SEISMIC BRACING NOTES

SUSPENDED PLUMBING PIPING (CONTINUED)

17. Standard supports in accordance with ASME B31, NFPA 13 or MSS SP-58 designed by tested load rating or analysis considering all loads are acceptable. There shall be a vertical support within 12'' of all seismic braces to ensure a seismic load path.

18. Vertical support spacing for trapeze mounted pipe runs is to be the lesser of 10 foot maximum or the maximum as dictated by the CPC 2013 or CMC 2013, as listed in the project specifications.

19. Each layer of a multi-layer trapeze rack shall be braced individually based on the weight of the individual layer, or as specifically engineered by ISAT. Layers supporting loads < 10 lbs/lf need not be braced provided that the load is accounted for in the nearest braced layer.

20. This OPM is limited to seismic bracing of interior pipes only. It does not address other loads such as, but not limited to, those generated by thermal growth, pressure, fluid dynamics, pipe rupture, or movement of equipment to which brace components are attached. It does not address components that cross seismic separation of buildings. Nor does it address components (other than pipe risers) attached to portions of the structure or equipment that will experience relative seismic displacement. Project specific design and OSHPD approval shall be required for design not covered by the OPM.

21. When used to construct a rigid brace arm assembly, minimum 12 gauge steel channel shall be solid, punched or short slot channel. Brace arm design values shown on Page E1.1 and E1.2.

22. Vertical pipe systems supported at each floor shall be considered seismically braced if the pipe has a riser clamp or bracket appropriately designed for seismic and vertical loads or if the penetration through each floor is tightly packed with approved insulation or firestops, satisfying NFPA 13-13 Section 9.3.5.8.5 and floor to floor spacing does not exceed maximum spacing tabulated in the C-series Bracing tables. Tops of risers exceeding 3 ft. shall be provided with supports or bracing appropriately designed. Where this bracing is attached to the horizontal piping, it shall be installed within 2 ft. of the riser.

23. Re-insulate any locations where pipe insulation had been originally removed for direct attachment of Longitudinal Restraint Devices (LRD) to single hung pipe.

24. When using back-to-back 12 gauge steel channel as a trapeze assembly, pipe may be mounted to both the top and the underside provided the limitations of Page G2 and G3 are not exceeded.

REVIEWED FOR CODE COMPLIANCE
OPM-0403
BY: William Staehlin
DATE: 01-26-2024
CALIFORNIA APPROVED

SEISMIC BRACING NOTES

VIBRATION ISOLATED PIPING

1. ISAT includes designs for the seismic restraint of vibration isolated piping suspended from spring hangers. However, design of the vibration isolated support system itself must be accomplished separately on a job specific basis by a qualified engineer. Hanger design shall satisfy overstrength factor (Ω_0) in accordance with ASCE7, as amended in 2016 CBC section 1616A.1.23 and springs must have OSHPD approval for strength and stiffness.

2. Install vibration isolation hardware per manufacturer's instructions to achieve the required degree of isolation and/or deflection.

3. Vibration isolated hangers that also require seismic bracing shall be braced using galvanized steel cable or minimum 12 gage hanging wire tied to ISAT designed and tested seismic brackets.

4. Cable to be installed with sufficient slack to accommodate, but not exceed, the vibration isolators calculated deflection. See manufacturer's vibration isolator specifications. Do not tension cables to the extent that they support gravity loads. Cable installation is to be symmetrical.

REVIEWED FOR CODE COMPLIANCE
OPM-0403
BY: William Staehlin
DATE: 01-26-2024
CALIFORNIA BUILDING CODE, 2022

REGISTERED PROFESSIONAL ENGINEER
MARCIN WASAZNIK
S-6612
STRUCTURAL
STATE OF CALIFORNIA

ISAT
A Division of Tomarco Contractor Specialties

International Seismic Application Technology
14848 Northam Street, La Mirada, CA 90638
877-999-4728 (Toll Free) 714-523-0845 (fax)
www.isatsb.com

2019 CBC HCAI SEISMIC BRACING NOTES

SUSPENDED ELECTRICAL SYSTEMS

1. In compliance with the 2019 CBC, seismic bracing is to be installed for all suspended distributed electrical systems and suspended electrical equipment per ISAT's engineered bracing tables, ISAT's installation details and the following criteria.

BRACING REQUIREMENTS FOR ELECTRICAL SERVICES		
Seismic Design Category	**I_P [a]**	**Service Bracing Requirements**
D, E, F	≥1.0	Brace Conduit ≥ 2-1/2" Trade Size Brace Trapeze Assemblies Supporting Raceways > 5 Lbs/Lf
EXCEPTIONS	ALL	Light Fixtures Suspended From the Structure Having Attachments Designed To Accommodate 1.4 x Weight In Both the Vertical and Horizontal Directions and With 360° Range of Motion. And In-Lay Ceiling Grid Light Fixtures That Are Positively Attached To The Suspended Ceiling System < 56 Lbs With Safety Wires[(b)] Per ASTM E580. Refer to ASCE 7-16 Section 13.5.6.2, ASTM E580 & 2019 CBC 1617A.1.21 for additional requirements.

a. I_P = Component Importance Factor
b. (2) No. 12-ga safety wires connected from the fixture housing to the structure above; not necessary for these safety wires to be taut

REVIEWED FOR CODE COMPLIANCE
HCAI
OPM-0403
BY: William Staehlin
DATE: 01-26-2024
CALIFORNIA BUILDING CODE, 2022

2. Where bracing is allowed to be omitted, connections between any fixed juncture, equipment or component are to be installed with adequate flexibility to accommodate differential displacements.

3. Conduit ≥ 2.5" connected to panels, cabinets or other equipment to be installed with flexible connections or designed for seismic forces and seismic relative displacements.

4. For Seismic Design Categories D, E or F, brace suspended components where component Ip > 1.0. Component importance factor, Ip, for design of supports and attachments shall be in accordance with the 2019 CBC Section 1617A.1.17 for HCAI 1 & 4 buildings. Component importance factor, Ip = 1.5, for HCAI 1R, 2 & 5 buildings shall be in accordance with 2019 CBC Section 1613.4.

5. Where the actual weight of the conduit plus conductor is unknown, refer to ISAT's conduit weight charts, Section X.

REGISTERED PROFESSIONAL ENGINEER
MARCIN WASAZNIK
S 6612
STRUCTURAL
STATE OF CALIFORNIA

ISAT
A Division of Tomarco Contractor Specialties

International Seismic Application Technology
14848 Northam Street, La Mirada, CA 90638
877-999-4728 (Toll Free) 714-523-0845 (fax)
www.isatsb.com

SUSPENDED ELECTRICAL SYSTEMS (CONTINUED)

6. Where the component does not convey hazardous content, seismic design is not required for:
   a. Components weighing ≤ 20 lbs or distributed systems ≤ 5 lbs/lf (Ip ≥ 1.0, SDC D, E, F) that are positively attached to the structure and supports & attachments are detailed on the plans, except equipment with hazardous contents, attachments to be shown on construction documents irrespective of weight (2019 CBC, 1617A.1.18 ASCE 7, Section 13.1.4).
   b. Components weighing less than 400 lbs., with a center of mass located 4 ft or less above the adjacent floor, the component is attached via flexible connections between itself and associated utilities (conduit, piping, etc.) and the component is positively attached to the floor (2019 CBC, 1617A.1.18 ASCE 7, Section 13.1.4) except components requiring Special Seismic Certification.

7. Seismic restraints are not required for conduit, cable trays and other electrical distributed systems (raceways) if the following conditions are met for the full length of the run (2019 CBC Section 1617A.1.24):
   a. Cable tray 12 ga. minimum or raceway is positively attached to the structure. Cable tray must be approved on a project specific basis or preapproved by HCAi. Spacing limits set by the manufacturer must not be exceeded. Cable tray brace spacing must be approved or preapproved by HCAi.
   b. Flexible connections or other assemblies are provided between cable tray or raceway and associated components to accommodate relative displacement.
   c. Trapeze assemblies with ⅜" or ½" diameter rod hangers ≤ 12" from the conduit, cable tray, or raceway support point to the connection at the supporting structure are used to support the cable tray or raceway, and the total weight supported by any single trapeze is 100 lbs or less.
   d. The conduit, cable tray, or raceway is supported by individual rod hangers ⅜" or ½" diameter, and each hanger in the raceway run is ≤ 12" in length from the conduit, cable tray, or raceway support point connection to the supporting structure, and the total weight supported by any single rod is 50 lbs or less.

8. Tests, Special Inspections and Observations (TIO) shall be in accordance with HCAI approved TIO form for the project.

9. Brace spacing shall not exceed the maximum allowable brace spacing as engineered by ISAT. Refer to ISAT bracing charts compiled by conduit size or trapeze weight. See C-Series pages.

10. All seismic bracing assemblies shall utilize ISAT supplied, proprietary, seismic brackets unless noted otherwise. Any substitution shall be subject to ISAT review and HCAI approval.

REVIEWED FOR CODE COMPLIANCE HCAI BY: William Staehlin DATE: 01/26/2024 CALIFORNIA BUILDING CODE, 2019

REGISTERED PROFESSIONAL ENGINEER MARCIN WASAZNIK S-6612 STRUCTURAL STATE OF CALIFORNIA

ISAT
A Division of Tomarco Contractor Specialties

International Seismic Application Technology
14848 Northam Street, La Mirada, CA 90638
877-999-4728 (Toll Free) 714-523-0845 (fax)
www.isatsb.com

SUSPENDED ELECTRICAL SYSTEMS (CONTINUED)

11. Every raceway which requires bracing shall have a minimum of two transverse braces and one longitudinal brace. For the purposes of this Manual, a "run" is defined as suspended raceway of 10 foot minimum straight length.

12. A longitudinal brace at a 90 degree change in direction may act as a transverse brace if it is within 2 feet of the change in direction or located within prescribed distances from the change in direction as shown on pages A1.0E and A2.0E. The brace arm and anchorage must be sized to meet or exceed the requirements of the total brace reaction. A brace arm for a smaller distributed utility is not to be utilized as transverse or longitudinal brace for an adjoining run of a larger distributed utility.

13. A transverse brace at a 90 degree change in direction may act as a longitudinal brace if it is within 2 feet of the change in direction or located within prescribed distances from the change in direction as shown on pages A1.0E and A2.0E. The brace arm and anchorage must be sized to meet or exceed the requirements of the total brace reaction. A brace arm for a smaller distributed utility is not to be utilized as transverse or longitudinal brace for an adjoining run of a larger distributed utility.

14. A transverse brace for a smaller raceway is not to be utilized as the longitudinal brace for an adjoining run of a larger raceway. A longitudinal brace for a smaller raceway is not to be utilized as the transverse brace for an adjoining run of a larger raceway.

15. All longitudinal brace locations, for individually supported conduit, shall employ an ISAT Longitudinal Restraint Device (LRD) as illustrated on F7 series pages and installed per the individual detail drawings within section B of the manual.

16. Standard supports in accordance with ASME B31, NFPA 13-16 or MSS SP-58 designed by tested load rating or analysis considering all loads are acceptable. There shall be a vertical support within 12'' of all seismic braces to ensure a seismic load path.

17. Vertical support spacing for electrical components is to be the lesser of 10 foot maximum, or the minimum as dictated by the California Electrical Code, 2019 (CEC 2019), as listed in the project specifications, or Authority Having Jurisdiction (AHJ).

18. Each layer of a multi-layer trapeze rack shall be braced individually based on the weight of the individual layer, or as specifically engineered by ISAT.

19. When used to construct a rigid brace arm assembly, minimum 12 gauge steel channel shall be solid, punched or short slot channel. Brace arm design values shown on Page E1.1 and E1.2.

REVIEWED FOR CODE COMPLIANCE
OPM-0403
BY: William Staehlin
DATE: 01/26/2024
CALIFORNIA BUILDING CODE, 2019

REGISTERED PROFESSIONAL ENGINEER
MARCIN WASAZNIK
S 6612
STRUCTURAL
STATE OF CALIFORNIA

ISAT
A Division of Tomarco Contractor Specialties

International Seismic Application Technology
14848 Northam Street, La Mirada, CA 90638
877-999-4728 (Toll Free) 714-523-0845 (fax)
www.isatsb.com

SUSPENDED ELECTRICAL SYSTEMS (CONTINUED)

20. When using back-to-back 12 gauge steel channel as a trapeze assembly, raceways may be mounted to both the top and the underside provided the limitations of Page G2 and G3 are not exceeded.

21. Pull boxes in-line with conduit are not electro-mechanical devices and are not required to be seismically braced unless otherwise called for in the construction documents. Brace pull boxes greater than 75 lbs.

REVIEWED FOR CODE COMPLIANCE
HCAi
OPM-0403
BY: William Staehlin
DATE: 01-26-2024
CALIFORNIA BUILDING CODE, 2022

REGISTERED PROFESSIONAL ENGINEER
MARCIN WASAZNIK
S 6612
STRUCTURAL
STATE OF CALIFORNIA

ISAT
A Division of Tomarco Contractor Specialties

International Seismic Application Technology
14848 Northam Street, La Mirada, CA 90638
877-999-4728 (Toll Free) 714-523-0845 (fax)
www.isatsb.com

2019 CBC HCAI SEISMIC BRACING NOTES

TRAPEZE ASSEMBLY - NO BRACING REQUIREMENTS

ALL CRITERIA SHOWN MUST BE MET

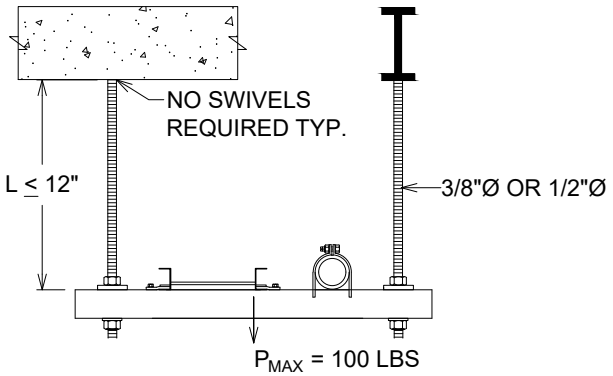

SINGLE ROD ASSEMBLY - NO BRACING REQUIREMENTS

ALL CRITERIA SHOWN MUST BE MET

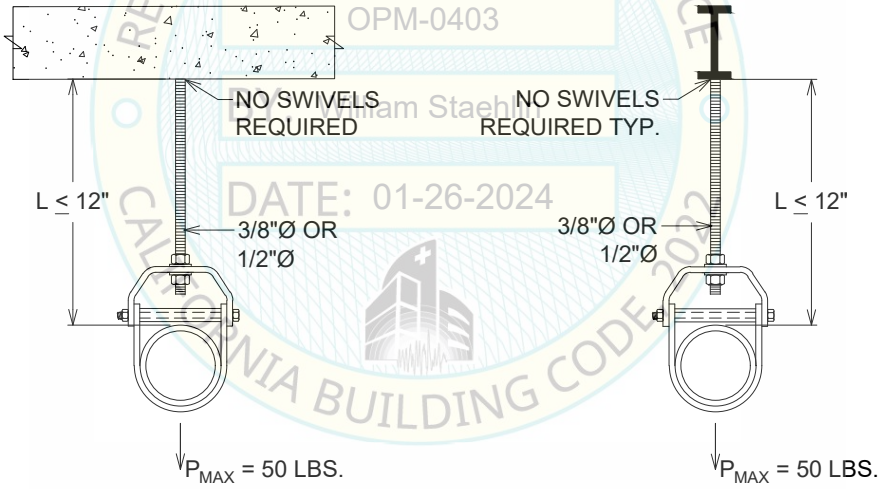

REVIEWED FOR CODE COMPLIANCE
HCAI
OPM-0403
By: William Staehlin
DATE: 01-26-2024
CALIFORNIA BUILDING CODE 2022

GENERAL NOTES (APPLIES TO TRAPEZE AND SINGLE ROD HANGERS)

1. SUPPORT ELECTRICAL RACEWAYS WITH ALL THREAD RODS.
2. EACH HANGER LENGTH IN THE RUN MUST BE LESS THAN THE LENGTH "L".
3. P_{MAX}= MAXIMUM TOTAL WEIGHT SUPPORTED BY ANY SINGLE TRAPEZE OR IN THE CASE OF A SINGLE HUNG UTILITY, MAXIMUM TOTAL WEIGHT SUPPORTED BY ANY SINGLE HANGER.
4. FLEXIBLE CONNECTIONS OR OTHER ASSEMBLIES ARE PROVIDED BETWEEN THE CABLE TRAY OR RACEWAY & ASSOCIATED COMPONENTS TO ACCOMMODATE RELATIVE DISPLACEMENT, WHERE THE CABLE TRAY OR RACEWAY IS POSITIVELY ATTACHED TO THE STRUCTURE.

DROP LENGTH EXCLUSIONS - ELECTRICAL

CONDUIT, CABLE TRAY & RACEWAYS

REGISTERED PROFESSIONAL ENGINEER
MARCIN WASAZNIK
S 6612
STRUCTURAL
STATE OF CALIFORNIA

ISAT
A Division of Tomarco Contractor Specialties
International Seismic Application Technology
14848 Northam Street, La Mirada, CA 90638
877-999-4728 (Toll Free) 714-523-0845 (fax)
www.isatsb.com

Rev. 0
5/30/2023

Page
7.5a

2019 CBC HCAI SEISMIC BRACING NOTES

SUSPENDED MECHANICAL PIPING

1. In compliance with the 2019 CBC, seismic bracing is to be installed on all suspended pipe and equipment per ISAT's engineered bracing tables, ISAT's installation details and the following criteria:

BRACING REQUIREMENTS FOR MECHANICAL PIPING SERVICES		
Seismic Design Category	**I_P [a]**	**Service Bracing Requirements**
Steel or Copper Piping Systems [(c)(d)(e)(f)(g)]		
D, E, F	1.0	Brace All Pipe > 3"
	>1.0	Brace All Pipe > 1" Exception: Pipes With Non-Hazardous Content With An Operating Weight ≤ 5 Lbs/Lf: - Sch. 40 Steel Vent Lines ≤ 2" Diameter - Full Sch. 40 Steel Lines ≤ 1-1/2" Diameter - Copper Vent Lines ≤ 3-1/2" Diameter - Full Copper Lines ≤ 2" Diameter
	≥1.0	Brace All Trapeze Assemblies Supporting Loads > 5 Lbs/Lf
EXCEPTIONS	All	Piping Systems Designed And Braced in Accordance with ASCE 7, Section 13.6.7.1
Cast Iron Piping Systems [(b)(c)(d)(f)(g)]		
D, E, F	All	Brace All Pipe With Non-Hazardous Content With An Operating Weight > 5 Lbs/Lf: - No-Hub Cast Iron Gravity Lines > 2" Diameter - No-Hub Cast Iron Vent Lines, Storm Drains & Overflow Drains > 3" Diameter

a. I_p = Component Importance Factor
b. Refer to Note 11 on page 8.3a
c. Provisions are made to avoid damaging impact
d. Use of flexible connectors required between unbraced piping and components
e. Applicable to pipe having an $R_p \geq 4.5$ in Table 13.6-1, ASCE 7-16
f. Hazardous: Including, but not limited to medical gases, fuel oil, natural gas, acid waste, methane, fire protection, fume hood exhaust, BSC exhaust, airborne infection isolation (AII) exhaust, ED decontamination exhaust, type I kitchen grease exhaust, steam and condensate piping, steam safety valves vents
g. Non-hazardous: Including, but not limited to, medical vacuum, compressed air, water, medical air

REGISTERED PROFESSIONAL ENGINEER MARCIN WASAZNIK S-6612 STRUCTURAL STATE OF CALIFORNIA

ISAT
A Division of Tomarco Contractor Specialties

International Seismic Application Technology
14848 Northam Street, La Mirada, CA 90638
877-999-4728 (Toll Free) 714-523-0845 (fax)
www.isatsb.com

Rev. 0
05/25/23
Page
8.1a

REVIEWED FOR CODE COMPLIANCE HCAI OPM-0403 BY: William Staehlin DATE: 01/26/2024 CALIFORNIA BUILDING CODE, 2022

SUSPENDED MECHANICAL PIPING (CONTINUED)

a. For Seismic Design Categories D, E or F, brace suspended components where component Ip > 1.0. Component importance factor, Ip, for design of supports and attachments shall be in accordance with the 2019 CBC Section 1617A.1.17 for HCAI 1 & 4 buildings. Component importance factor, Ip = 1.5, for HCAI 1R, 2 & 5 buildings shall be in accordance with 2019 CBC Section 1613.4.

2. Where the component does not convey hazardous content, seismic design is not required for:
   a. Components weighing ≤ 20 lbs or distributed systems ≤ 5 lbs/lf (Ip ≥ 1.0, SDC D, E, F) that are positively attached to the structure & supports & attachments are detailed on the plans, except equipment with hazardous contents, attachments to be shown on construction documents irrespective of weight (2019 CBC, 1617A.1.18 ASCE 7, Section 13.1.4, Section 3(a)).
   b. Components weighing less than 400 lbs., with a center of mass located 4 ft or less above the adjacent floor or roof, the component is attached via flexible connections between itself and associated utilities (conduit, piping, etc.) and the component is positively attached to the floor or roof (2019 CBC, 1617A.1.18 ASCE 7, Section 13.1.4) except components requiring Special Seismic Certification.

3. For any situation in which seismic bracing is allowed to be omitted, flexible connections are to be provided between the components and piping. Provisions are to be made to avoid or protect the pipe from impact.

4. Per ASCE 7-16, Section 13.4.1, do not use an Rp factor greater than 6.0 when calculating Fp for design of the attachment.

5. Un-braced, suspended piping attached to components is to be installed with adequate flexibility to accommodate differential displacements. Flexible connections in piping required in 2019 CBC, 1617A.1.26 ASCE 7, Section 13.6.7.3 are not required where pipe is rigidly attached to the same floor (or wall, as applicable) that provides vertical and lateral support for the equipment, or to a fixture.

6. Flexible connections in piping are required at seismic separation joints and shall be detailed to accommodate the seismic relative displacements at connections.

7. Seismic restraints are not required for piping components if the following conditions are met for the full length of the run:
   a. Piping system is positively attached to the structure.
   b. Flexible connections, expansion loops, or other assemblies are provided to accommodate the relative displacement between component and piping.
   c. Trapeze and single support components meet or exceed any one of the limitations in 2019 CBC, 1617A.1.26 ASCE 7, Section 13.6.7.3 - 1 through 2.b. Refer to page 8.6a.

REVIEWED FOR CODE COMPLIANCE
OPM-0403
BY: William Staehlin
DATE: 01-26-2024
CALIFORNIA BUILDING CODE 2022

REGISTERED PROFESSIONAL ENGINEER
MARCIN WASAZNIK
S-6612
STRUCTURAL
STATE OF CALIFORNIA

ISAT
A Division of Tomarco Contractor Specialties

International Seismic Application Technology
14848 Northam Street, La Mirada, CA 90638
877-999-4728 (Toll Free) 714-523-0845 (fax)
www.isatsb.com

SUSPENDED MECHANICAL PIPING (CONTINUED)

8. For the purpose of calculating weight, pipe weights are to be the operating weights, include weight of pipe insulation as required. If actual pipe weight is unknown, refer to pipe weight charts in Section X.

9. Tests, Special Inspections and Observations (TIO) shall be in accordance with HCAI approved TIO form for the project.

10. Brace spacing shall not exceed the maximum allowable brace spacing as engineered by ISAT. Refer to individual ISAT bracing charts compiled by pipe size or trapeze weight. See Index Page C0.1.

11. When calculating seismic design force for pipes constructed of low deformability materials such as cast iron, the value $R_p = 3.0$ (e.g. cast iron piping with non-flexible connections) is to be utilized. For drain, waste and vent piping, the value $R_p = 2.5$ (e.g. cast iron piping with flexible connections) is to be utilized.

12. All seismic bracing assemblies shall utilize ISAT supplied, proprietary seismic brackets unless noted otherwise. Any substitution shall be subject to ISAT review and HCAI approval.

13. Every pipe run which requires bracing shall have a minimum of two transverse braces and one longitudinal brace. For the purposes of this Manual, a "run" is defined as suspended piping of 10 foot minimum straight length.

14. Rigid grooved coupling listed for UL Standard 213 shall be permitted in horizontal run of pipe. Flexible grooved coupling listed for UL Standard 213 shall be permitted in vertical risers (to accommodate drift) and other locations (e.g. seismic separation, equipment nozzle, etc.) to accommodate small movement and/or rotation. Non-UL listed groove couplings shall not be used unless approved on project specific basis. Cast-iron (no-hub) pipe brace couplings shall be manufactured in accordance with ASTM C1540, shall be certified in accordance with FM 1680 Class 1 and gravity hangers shall be spaced per the requirements of Table 313.3 of the 2019 California Plumbing Code (CPC 2019) for no-hub cast iron pipe.

    Exception: cast iron (no-hub) pipe joined by couplings not satisfying ASTM C1540 or not certified in accordance w/ FM 1680 class 1 shall be designed on a project specific basis & shall require project specific HCAI approval.

15. A longitudinal brace at a 90 degree change in direction may act as a transverse brace if it is within 2 feet of the change in direction or located within prescribed distances from the change in direction as shown on pages A1.0P and A2.0P. The brace arm and anchorage must be sized to meet or exceed the requirements of the total brace reaction. A brace arm for a smaller distributed utility is not to be utilized as transverse or longitudinal brace for an adjoining run of a larger distributed utility.

REVIEWED FOR CODE COMPLIANCE
HCAi
OPM-0403
BY: William Staehlin
DATE: 01-26-2024
CALIFORNIA BUILDING CODE 2022

REGISTERED PROFESSIONAL ENGINEER
MARCIN WASAZNIK
S 6612
STRUCTURAL
STATE OF CALIFORNIA

ISAT
A Division of Tomarco Contractor Specialties

International Seismic Application Technology
14848 Northam Street, La Mirada, CA 90638
877-999-4728 (Toll Free) 714-523-0845 (fax)
www.isatsb.com

SUSPENDED MECHANICAL PIPING (CONTINUED)

16. A transverse brace at a 90 degree change in direction may act as a longitudinal brace if it is within 2 feet of the change in direction or located within prescribed distances from the change in direction as shown on pages A1.0P and A2.0P. The brace arm, anchorage, supports & attachments must be sized to meet or exceed the requirements of the total brace reaction. A brace arm for a smaller distributed utility is not to be utilized as transverse or longitudinal brace for an adjoining run of a larger distributed utility.

17. A transverse brace for a smaller pipe is not to be utilized as the longitudinal brace for an adjoining run of larger pipe. A longitudinal brace for a smaller pipe is not to be utilized as the transverse brace for an adjoining run of larger pipe except when specifically engineered by ISAT technical support.

18. Except where transverse braces are acting as a longitudinal brace at a change in direction, all longitudinal brace locations, for individually supported pipe, shall employ an ISAT Longitudinal Restraint Device (LRD) as illustrated on F7 series pages and installed per the individual detail drawings within section B of the manual.

19. Standard supports in accordance with ASME B31, NFPA 13-16 or MSS SP-58 designed by tested load rating or analysis considering all loads are acceptable. In addition, the stiffness of the support, where appropriate, shall be designed such that the seismic load path for the component performs its intended function. There shall be a vertical support within 12'' of all seismic braces to ensure a seismic load path.

20. Vertical support spacing for trapeze mounted pipe runs is to be the lesser of 10 foot maximum or the maximum as dictated by the CPC 2019 or CMC 2019.

21. Each layer of a multi-layer trapeze rack shall be braced individually based on the weight of the individual layer, or as specifically engineered by ISAT. This OPM is limited to seismic bracing of interior pipes only. It does not address other loads such as, but not limited to, those generated by thermal growth, pressure, fluid dynamics, pipe rupture, or movement of equipment to which brace components are attached. It does not address components that cross seismic separation of buildings. Nor does it address components (other than pipe risers) attached to portions of the structure or equipment that will experience relative seismic displacement. Project specific design and HCAI approval shall be required for design not covered by the OPM.

22. For rigid brace arm assembly, solid, punched or short slot minimum 12 gauge steel channel (pg H2) or EMT sizes per page E0.1 shall be used. Brace arm design values shown on Page E1.1 , E1.2, and E1.3.

REVIEWED FOR CODE COMPLIANCE
HCAI
OPM-0403
BY: William Staehlin
DATE: 01-26-2024
CALIFORNIA BUILDING CODE 2019

REGISTERED PROFESSIONAL ENGINEER
MARCIN WASAZNIK
S-6612
STRUCTURAL
STATE OF CALIFORNIA

ISAT
A Division of Tomarco Contractor Specialties

International Seismic Application Technology
14848 Northam Street, La Mirada, CA 90638
877-999-4728 (Toll Free) 714-523-0845 (fax)
www.isatsb.com

SUSPENDED MECHANICAL PIPING (CONTINUED)

23. Vertical pipe systems supported at each floor shall be considered seismically braced if the pipe has a riser clamp or bracket appropriately designed for seismic and vertical loads or if the penetration through each floor is tightly packed with approved insulation or firestops, satisfying NFPA 13-16 Section 9.3.5.8.5 and floor to floor spacing does not exceed maximum spacing tabulated in the C-series Bracing tables. Tops of risers exceeding 3 ft. shall be provided with a four-way brace. Where this bracing is attached to the horizontal piping, it shall be installed within 2 ft. of the riser.

24. Re-insulate any locations where pipe insulation had been originally removed for direct attachment of Longitudinal Restraint Devices (LRD) to single hung pipe.

25. When using back-to-back 12 gauge steel channel as a trapeze assembly, pipe may be mounted to both the top and the underside provided the limitations of Page G2 and G3 are not exceeded.

VIBRATION ISOLATED PIPING

1. ISAT includes designs for the seismic restraint of vibration isolated piping suspended from spring hangers. However, design of the vibration isolated support system itself must be accomplished separately on a job specific basis by a qualified engineer. Hanger design shall satisfy overstrength factor (Ω_0) in accordance with ASCE7, as amended in 2019 CBC section 1617A.1.23 and springs must have HCAI approval for strength and stiffness.

2. Install vibration isolation hardware per manufacturer's instructions to achieve the required degree of isolation and/or deflection.

3. Vibration isolated hangers that also require seismic bracing shall be braced using galvanized steel cable with ISAT designed and tested seismic brackets.

4. Cable (reference pages E4.2, E4.3, E4.4, or E4.7) to be installed with sufficient slack to accommodate, but not exceed, the vibration isolators calculated deflection. See manufacturer's vibration isolator specifications. Do not tension cables to the extent that they support gravity loads. Cable installation is to be symmetrical.

5. Cable: 7x19 steel small diameter specialty cord per ASTM A1023/A1023M table 7.

REVIEWED FOR CODE COMPLIANCE
HCAi
OPM-0403
BY: William Staehlin
DATE: 01-26-2024
CALIFORNIA BUILDING CODE, 2022

2019 CBC HCAI SEISMIC BRACING NOTES

TRAPEZE ASSEMBLY - NO BRACING REQUIREMENTS

ALL CRITERIA SHOWN MUST BE MET

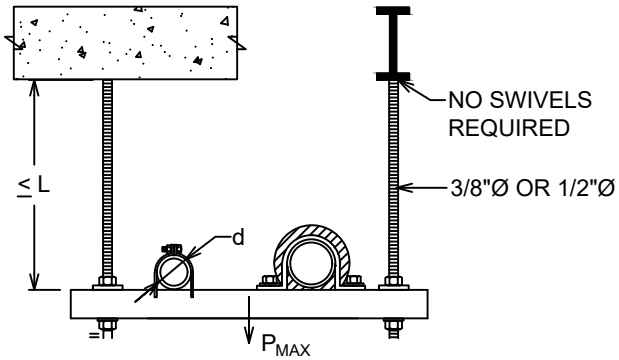

2019 CBC

I_p	SDC	d	L	P_{MAX}
1.0	D, E, F	≤ 3"	12"	100 lbs
1.5	D, E, F	≤ 2"	12"	100 lbs

SINGLE HUNG ASSEMBLY - NO BRACING REQUIREMENTS

ALL CRITERIA SHOWN MUST BE MET

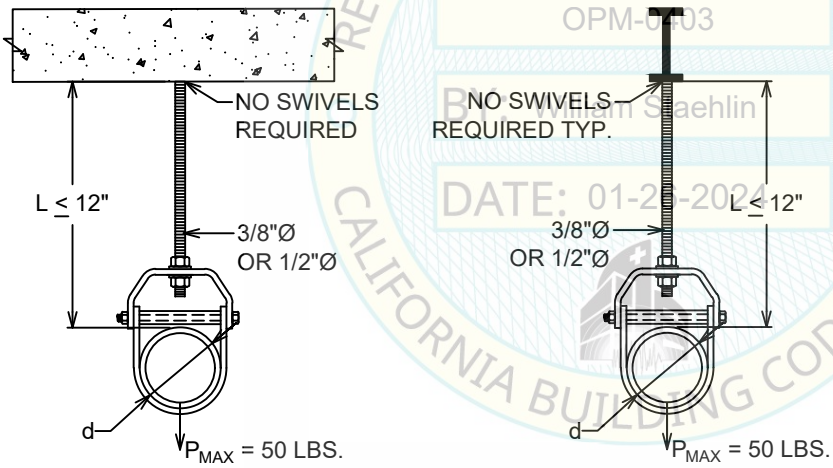

2019 CBC

		I_p	SDC	d
$R_p \geq 4.5$	SINGLE HUNG	1.0	D, E, F	≤ 3"
		1.5	D, E, F	≤ 1"

REVIEWED FOR CODE COMPLIANCE
OPM-0403
By: William Staehlin
DATE: 01-26-2024
CALIFORNIA BUILDING CODE, 2022

GENERAL NOTES (APPLIES TO TRAPEZE AND SINGLE ROD HANGERS)

1. SUPPORT PIPING WITH ALL THREAD RODS.
2. EACH HANGER LENGTH IN THE RUN MUST BE LESS THAN THE LENGTH "L".
3. P_{MAX}= MAXIMUM TOTAL WEIGHT SUPPORTED BY ANY SINGLE TRAPEZE OR IN THE CASE OF A SINGLE HUNG UTILITY, MAXIMUM TOTAL WEIGHT SUPPORTED BY ANY SINGLE HANGER.
4. PROVISIONS ARE MADE TO ELIMINATE SEISMIC IMPACT FOR COMPONENTS VULNERABLE TO IMPACT.
5. FLEXIBLE CONNECTIONS, EXPANSION LOOPS, OR OTHER ASSEMBLIES ARE PROVIDED TO ACCOMMODATE THE RELATIVE DISPLACEMENT BETWEEN COMPONENT AND PIPING, WHERE THE PIPING SYSTEM IS POSITIVELY ATTACHED TO THE STRUCTURE.

DROP LENGTH EXCLUSIONS - PIPING

REGISTERED PROFESSIONAL ENGINEER
MARCIN WASAZNIK
S 6612
STRUCTURAL
STATE OF CALIFORNIA

ISAT
A Division of Tomarco Contractor Specialties

International Seismic Application Technology
14848 Northam Street, La Mirada, CA 90638
877-999-4728 (Toll Free) 714-523-0845 (fax)
www.isatsb.com

Rev. 0
06/06/23

Page
8.6a

2019 CBC HCAI SEISMIC BRACING NOTES

HVAC DUCT AND MECHANICAL COMPONENTS

1. In compliance with the 2019 CBC, seismic bracing is to be installed on all suspended HVAC duct runs and mechanical components per ISAT's engineered bracing tables, ISAT's installation details and the following criteria.

BRACING REQUIREMENTS FOR SUSPENDED HVAC DUCT		
Seismic Design Category	**I_P [a]**	**Service Bracing Requirements**
D, E, F	≥ 1.0	Brace All Duct Designed to Carry or Convey Toxic, Highly Toxic or Flammable Gases or used for Smoke Control
	≥1.0	Brace All Duct Having a Cross-Sectional Area[(b)] ≥ 6 ft^2 or Weighing > 20 Lbs/Lf

a. I_p = Component Importance Factor
b. Provisions Are Made to Avoid Damaging Impact

REVIEWED FOR CODE COMPLIANCE
HCAI
OPM-0403
BY: William Staehlin
DATE: 01-26-2024
CALIFORNIA BUILDING CODE, 2019

a. For Seismic Design Categories D, E or F, brace suspended components where component Ip > 1.0. Component importance factor, Ip, for design of supports and attachments shall be in accordance with the 2019 CBC Section 1617A.1.17 for HCAI 1 & 4 buildings. Component importance factor, Ip = 1.5, for HCAI 1R, 2 & 5 buildings shall be in accordance with 2019 CBC Section 1613.4.

2. Seismic design is not required for:
   a. Components weighing ≤ 20 lbs or distributed systems ≤ 5 lbs/lf (Ip ≥ 1.0, SDC D, E, F) that are positively attached to the structure and supports & attachments are detailed on the plans, except equipment with hazardous contents, attachments to be shown on construction documents irrespective of weight (2019 CBC, 1617A.1.18 ASCE 7, Section 13.1.4).
   b. Components weighing less than 400 lbs., with a center of mass located 4 ft or less above the adjacent floor or roof, the component is attached via flexible connections between itself and associated utilities (conduit, piping, etc.) and the component is positively attached to the floor or roof (2019 CBC, 1617A.1.18 ASCE 7, Section 13.1.4) except components requiring Special Seismic Certification in accordance with 2019 CBC Section 1705A.13.3.

HVAC DUCT AND MECHANICAL COMPONENTS (CONTINUED)

3. Components that are installed in-line with the duct system and have an operating weight greater than 75 lbs (334N), such as fans, heat exchangers and humidifiers, shall be supported and laterally braced independent of the duct system and such braces shall meet the force requirements of section 13.3.1. If the in-line device requires special seismic certification or has an OSP (HCAI Special Seismic Certification Preapproval per HCAI PIN 55), support & lateral brace shall be provided as specified in the certification or OSP document, regardless of the in-line duct device operating weight. (Exception: VAV/CAV boxes up to 75 lbs.)

4. Bracing for suspended components installed in-line with the duct system not designed to convey, support or otherwise contain toxic, highly toxic or explosive substances, flammable gasses or are used for smoke control is not required where the operating weight is less than or equal to 75 lbs.

   Note: If the in-line duct device requires special seismic certification or has an HCAI OSP, support and lateral bracing shall be provided as specified in the certification or OSP document, regardless of the in-line duct device operating weight. (Exception: VAV/CAV boxes up to 75 lbs.)

5. Components or equipment that are installed in-line with the duct system and have an operating weight less than or equal to 75 lbs. such as small terminal units, dampers, louvers, diffusers, and VAV/CAV/ATU boxes, etc. and are directly connected to the rigid ductwork on each end (no flexible connections) may be considered part of the duct run and do not require independent support and seismic bracing if the weight of the duct on each side of the component equals or exceeds the weight of the component; or if the duct is braced with the mass of the in-line component considered in the forces tributary to the adjacent braces. Unbraced piping attached to in-line components or equipment shall be provided with adequate flexibility (e.g. flexible connections or (3) 90 degree elbows) to accommodate the seismic relative displacements.

6. Per ASCE 7-16, Section 13.4.1, do not use an R_p factor greater than 6.0 when calculating F_p for design of the attachment.

7. Un-braced piping attached to in-line components or equipment shall be provided with adequate flexible connections to accommodate seismic relative displacements.

REVIEWED FOR CODE COMPLIANCE
HCAI
OPM-0403
BY: William Staehlin
DATE: 1-26-2024
CALIFORNIA BUILDING CODE

REGISTERED PROFESSIONAL ENGINEER
MARCIN WASAZNIK
S-6612
STRUCTURAL
STATE OF CALIFORNIA

ISAT
A Division of Tomarco Contractor Specialties

International Seismic Application Technology
14848 Northam Street, La Mirada, CA 90638
877-999-4728 (Toll Free) 714-523-0845 (fax)
www.isatsb.com

HVAC DUCT AND MECHANICAL COMPONENTS (CONTINUED)

8. Seismic restraints are not required for duct systems if the following conditions are met for the full length of the run:
   a. Duct system is positively attached to the structure.
   b. Flexible connections or other assemblies are provided to accommodate relative displacement between the duct system and associated components.
   c. Trapeze and single support components must meet the limitations in 2019 CBC, 1617A.1.25 ASCE 7, Section 13.6.6 – 1.a & 1.b, respectively. Refer to page 9.6a.

9. Where bracing is allowed to be omitted:
   a. Flexible connections are required between any fixed juncture or component and the connecting HVAC duct.
   b. Provisions are to be made to avoid impact with other ducts or mechanical components or to protect the ducts in the event of impact, the distribution system is positively attached to the structure.

10. All trapeze assemblies supporting ducts shall be braced considering the total weight of the duct(s) and insulation on the trapeze. If the actual weight of the duct is unknown, refer to Duct Weight Charts, Section X.

11. All seismic bracing assemblies shall utilize ISAT supplied, proprietary seismic brackets unless noted otherwise. Any substitution shall be subject to ISAT review and HCAI approval.

12. Brace spacing shall not exceed the maximum allowable brace spacing as engineered by ISAT for this preapproval. Refer to individual ISAT bracing charts compiled by duct trapeze weight. See Index Page C0.1.

13. Every HVAC duct run which requires bracing shall have a minimum of two transverse braces and one longitudinal brace. For the purposes of this Manual, a run is defined as a suspended element of 10 foot minimum straight length.

14. A rigid transverse brace shall be installed on one side of a horizontal 90 degree change in duct direction.

15. A transverse brace may act as a longitudinal brace if it is located within two duct widths from the inside corner of a 90 degree change in direction, if the brace arm and anchor have been sized to meet or exceed the requirements of the longitudinal brace and the transverse brace is installed on the larger of the two ducts as shown on pages A2.0M and A2.1M or as engineered by ISAT technical support.

REVIEWED FOR CODE COMPLIANCE
HCAI
BY: William Staehlin
DATE: 01-26-2024
CALIFORNIA BUILDING CODE 2022

REGISTERED PROFESSIONAL ENGINEER
MARCIN WASAZNIK
S 6612
STRUCTURAL
STATE OF CALIFORNIA

ISAT
A Division of Tomarco Contractor Specialties

International Seismic Application Technology
14848 Northam Street, La Mirada, CA 90638
877-999-4728 (Toll Free) 714-523-0845 (fax)
www.isatsb.com

HVAC DUCT AND MECHANICAL COMPONENTS (CONTINUED)

16. A longitudinal brace may act as a transverse brace if it is located within two duct widths from the inside corner of a 90 degree change in direction, if the brace arm and anchor have been sized to meet or exceed the requirements of the transverse brace and the longitudinal brace is installed on the larger of the two ducts as shown on pages A2.0M and A2.1M or as engineered by ISAT technical support.

17. Tests, Special Inspections and Observations (TIO) shall be in accordance with HCAI approved TIO form for the project.

18. Flexible connections at walls are not allowed as Transverse Brace locations.

19. Where a duct passes through a wall may be considered a transverse brace location provided the duct is tightly constrained and it is a rigid connection. The ability of a breakaway smoke damper to act as a transverse brace location is to be evaluated on a case-by-case basis. The Engineer of Record or the Project Architect must verify the ability of the wall to accommodate the transverse seismic load.

20. Vertical support spacing for trapeze mounted duct is to be the lesser of 10 foot maximum, or the maximum as dictated by the California Mechanical Code.

21. Each layer of a multi-layer trapeze rack shall be braced individually based on the weight of the individual layer, or as specifically engineered by ISAT.

22. All vertical riser ducts shall include engineered lateral restraint and vertical supports at the top and bottom of the riser and at each intermediate floor not to exceed a maximum interval from the C-series Bracing Tables. The lateral seismic restraint and the vertical support shall be engineered on an individual project basis.

23. Vertical risers which are mechanically attached to floors at the point of penetration are considered a transverse and longitudinal brace location when the supports and attachments are sized to accommodate the lateral load.

24. For rigid brace arm assembly, solid, punched or short slot minimum 12 gauge steel channel (pg H2) or EMT sizes per page E0.1 shall be used. Brace arm design values shown on Page E1.1 , E1.2, and E1.3.

REVIEWED FOR CODE COMPLIANCE
HCAI
BY: William Staehlin
DATE: 01-26-2024
CALIFORNIA BUILDING CODE 2022

REGISTERED PROFESSIONAL ENGINEER
MARCIN WASAZNIK
S 6612
STRUCTURAL
STATE OF CALIFORNIA

ISAT
A Division of Tomarco Contractor Specialties

International Seismic Application Technology
14848 Northam Street, La Mirada, CA 90638
877-999-4728 (Toll Free) 714-523-0845 (fax)
www.isatsb.com

2019 CBC HCAI SEISMIC BRACING NOTES

VIBRATION ISOLATED HVAC DUCT AND MECHANICAL COMPONENTS

1. ISAT includes designs for the seismic restraint of vibration isolated piping suspended from spring hangers. However, design of the vibration isolated support system itself must be accomplished separately on a job specific basis by a qualified engineer. Hanger design shall satisfy overstrength factor (Ω_0) in accordance with ASCE7, as amended in 2019 CBC section 1617A.1.23 and springs must have HCAI approval for strength and stiffness.

2. Install vibration isolation hardware per manufacturer's instructions to achieve the required degree of isolation and/or deflection.

3. Vibration isolated hangers that also require seismic bracing shall be braced using galvanized steel cable with ISAT designed and tested seismic brackets.

4. Cable (reference pages E4.2, E4.3, E4.4, or E4.7) to be installed with sufficient slack to accommodate, but not exceed, the vibration isolators calculated deflection. See manufacturer's vibration isolator specifications. Do not tension cables to the extent that they support gravity loads. Cable installation is to be symmetrical.

5. Cable: 7x19 steel small diameter specialty cord per ASTM A1023/A1023M table 7.

REVIEWED FOR CODE COMPLIANCE
HCAI
OPM-0403
BY: William Staehlin
DATE: 01-26-2024
CALIFORNIA BUILDING CODE, 2022

REGISTERED PROFESSIONAL ENGINEER
MARCIN WASAZNIK
S 6612
STRUCTURAL
STATE OF CALIFORNIA

ISAT
A Division of Tomarco Contractor Specialties

International Seismic Application Technology
14848 Northam Street, La Mirada, CA 90638
877-999-4728 (Toll Free) 714-523-0845 (fax)
www.isatsb.com

2019 CBC HCAI SEISMIC BRACING NOTES

TRAPEZE ASSEMBLIES - NO BRACING REQUIREMENTS

ALL CRITERIA SHOWN MUST BE MET

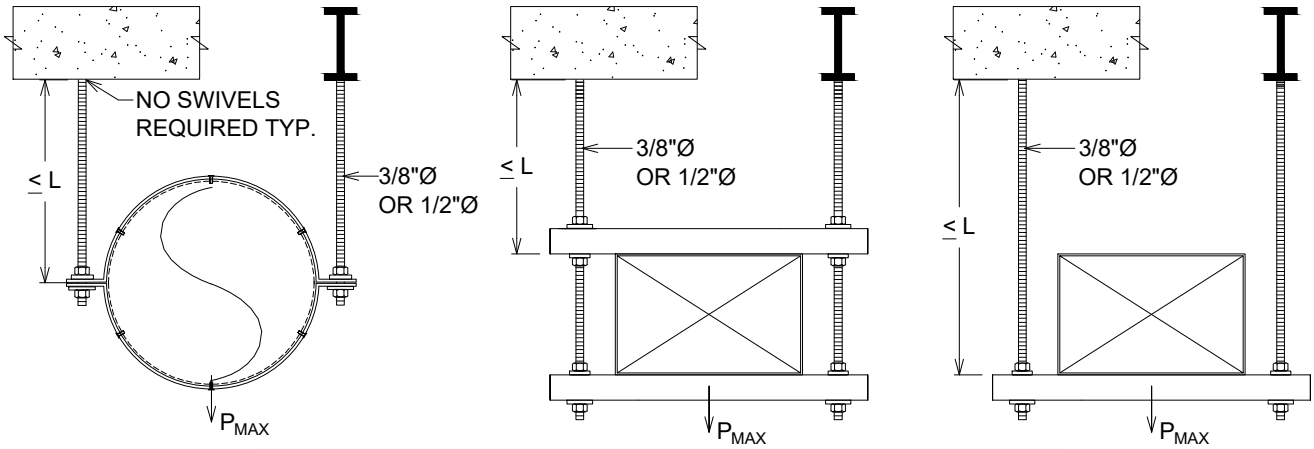

2019 CBC

L	P_{MAX} [1]
12"	100 lbs

1. P/MAX MUST BE LESS THAN 10 LB/FT

SINGLE ROD ASSEMBLY - NO BRACING REQUIREMENTS

ALL CRITERIA SHOWN MUST BE MET

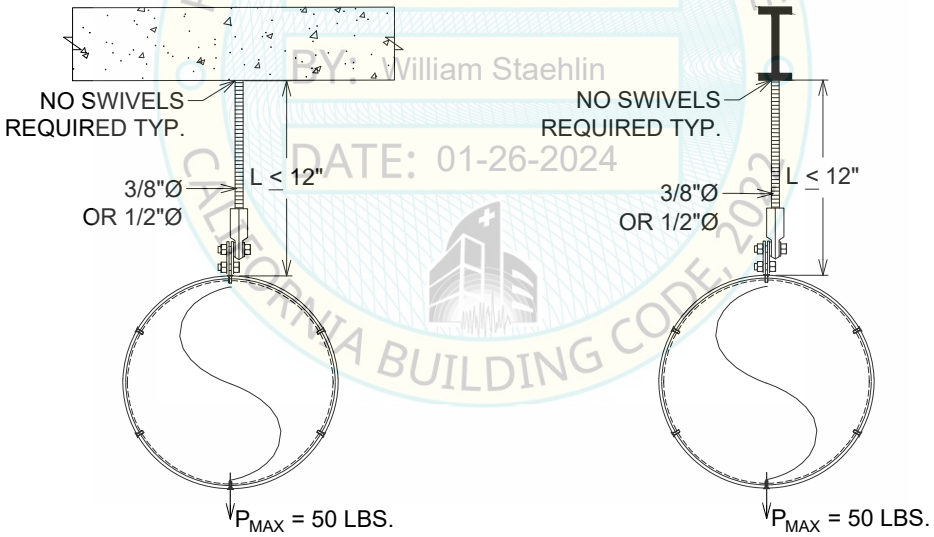

REVIEWED FOR CODE COMPLIANCE
HCAi
OPM-0403
BY: William Staehlin
DATE: 01-26-2024
CALIFORNIA BUILDING CODE 2022

GENERAL NOTES (APPLIES TO TRAPEZE AND SINGLE ROD HANGERS)

1. SUPPORT DUCT WORK WITH ALL THREAD RODS.
2. EACH HANGER LENGTH IN THE RUN MUST BE LESS THAN THE LENGTH "L".
3. P_{MAX}= MAXIMUM TOTAL WEIGHT SUPPORTED BY ANY SINGLE TRAPEZE OR IN THE CASE OF A SINGLE HUNG UTILITY, MAXIMUM TOTAL WEIGHT SUPPORTED BY ANY SINGLE HANGER.
4. PROVISIONS ARE MADE TO ELIMINATE SEISMIC IMPACT FOR COMPONENTS VULNERABLE TO IMPACT.

DROP LENGTH EXCLUSIONS - DUCT

REGISTERED PROFESSIONAL ENGINEER
MARCIN WASAZNIK
S 6612
STRUCTURAL
STATE OF CALIFORNIA

ISAT
A Division of Tomarco Contractor Specialties

International Seismic Application Technology
14848 Northam Street, La Mirada, CA 90638
877-999-4728 (Toll Free) 714-523-0845 (fax)
www.isatsb.com

Rev. 0
5/30/2023

Page
9.6a

2019 CBC HCAI SEISMIC BRACING NOTES

SUSPENDED PLUMBING PIPING

1. In compliance with the 2019 CBC, seismic bracing is to be installed on all suspended pipe and equipment per ISAT's engineered bracing tables, ISAT's installation details and the following criteria:

BRACING REQUIREMENTS FOR PLUMBING PIPING SERVICES		
Seismic Design Category	**I_P [a]**	**Service Bracing Requirements**
Steel or Copper Piping Systems *(c)(d)(e)(f)(g)*		
D, E, F	1.0	Brace All Pipe > 3"
	>1.0	Brace All Pipe > 1" Exception: Pipes With Non-Hazardous Content With An Operating Weight ≤ 5 Lbs/Lf: - Sch. 40 Steel Vent Lines ≤ 2" Diameter - Full Sch. 40 Steel Lines ≤ 1-1/2" Diameter - Copper Vent Lines ≤ 3-1/2" Diameter - Full Copper Lines ≤ 2" Diameter
	≥1.0	Brace All Trapeze Assemblies Supporting Loads > 5 Lbs/Lf
EXCEPTIONS	All	Piping Systems Designed and Braced in Accordance with ASCE 7, Section 13.6.7.1
Cast Iron Piping Systems *(b)(c)(d)(f)(g)*		
D, E, F	All	Brace All Pipe with Non-Hazardous Content With An Operating Weight > 5 Lbs/Lf: - No-Hub Cast Iron Gravity Lines > 2" Diameter - No-Hub Cast Iron Vent Lines, Storm Drains & Overflow Drains > 3" Diameter

a. I_p = Component Importance Factor
b. Refer to Note 11 on page 10.3a
c. Provisions are made to avoid damaging impact
d. Use of flexible connectors required between unbraced piping and components
e. Applicable to pipe having an $R_p \geq 4.5$ in Table 13.6-1, ASCE 7-16
f. Hazardous: Including, but not limited to medical gases, fuel oil, natural gas, acid waste, methane, fire protection, fume hood exhaust, BSC exhaust, airborne infection isolation (AII) exhaust, ED decontamination exhaust, type I kitchen grease exhaust, steam and condensate piping, steam safety valves vents
g. Non-hazardous: Including, but not limited to, medical vacuum, compressed air, water, medical air

REVIEWED FOR CODE COMPLIANCE
OPM-0403
BY: William Staehlin
DATE: 01-26-2024
CALIFORNIA BUILDING CODE 2022

REGISTERED PROFESSIONAL ENGINEER
MARCIN WASAZNIK
S 6612
STRUCTURAL
STATE OF CALIFORNIA

ISAT
A Division of Tomarco Contractor Specialties

International Seismic Application Technology
14848 Northam Street, La Mirada, CA 90638
877-999-4728 (Toll Free) 714-523-0845 (fax)
www.isatsb.com

SUSPENDED PLUMBING PIPING (CONTINUED)

a. For Seismic Design Categories D, E or F, brace suspended components where component Ip > 1.0. Component importance factor, Ip, for design of supports and attachments shall be in accordance with the 2019 CBC Section 1617A.1.17 for HCAI 1 & 4 buildings. Component importance factor, Ip = 1.5, for HCAI 1R, 2 & 5 buildings shall be in accordance with 2019 CBC Section 1613.4.

2. Seismic design is not required for:
   a. Components weighing ≤ 20 lbs or distributed systems ≤ 5 lbs/lf (Ip ≥ 1.0, SDC D, E, F) that are positively attached to the structure and supports & attachments are detailed on the plans, except equipment with hazardous contents, attachments to be shown on construction documents irrespective of weight (2019 CBC, 1617A.1.18 ASCE 7, Section 13.1.4).
   b. Components weighing less than 400 lbs., with a center of mass located 4 ft or less above the adjacent floor or roof, the component is attached via flexible connections between itself and associated utilities (conduit, piping, etc.) and the component is positively attached to the floor or roof (2019 CBC, 1617A.1.18 ASCE 7, Section 13.1.4) except components requiring Special Seismic Certification, in accordance with 2019 CBC Section 1705A.13.3.

3. For any situation in which seismic bracing is allowed to be omitted, flexible connections are to be provided between the components and piping. Provisions are to be made to avoid or protect the pipe from impact.

4. Per ASCE 7-16, Section 13.4.1, do not use an R_p factor greater than 6.0 when calculating F_p for design of the attachment.

5. Un-braced, suspended piping attached to components is to be installed with adequate flexibility to accommodate differential displacements. Flexible connections in piping required in 2019 CBC, 1617A.1.26 ASCE 7, Section 13.6.7.3 are not required where pipe is rigidly attached to the same floor (or wall, as applicable) that provides vertical and lateral support for the equipment, or to a fixture.

6. Flexible connections in piping are required at seismic separation joints and shall be detailed to accommodate the seismic relative displacements at connections.

7. Seismic restraints are not required for piping components if the following conditions are met for the full length of the run:
   a. Piping system is positively attached to the structure.
   b. Flexible connections, expansion loops, or other assemblies are provided to accommodate the relative displacement between component and piping.
   c. Trapeze and single support components meet or exceed any one of the limitations in 2019 CBC, 1617A.1.26 ASCE 7, Section 13.6.7.3 -1 through 2.b. Refer to page 10.6a.

REVIEWED FOR CODE COMPLIANCE
OPM-0403
BY: William Staehlin
DATE: 01-26-2024
CALIFORNIA BUILDING CODE 2022

REGISTERED PROFESSIONAL ENGINEER
MARCIN WASAZNIK
S 6612
STRUCTURAL
STATE OF CALIFORNIA

ISAT
A Division of Tomarco Contractor Specialties

International Seismic Application Technology
14848 Northam Street, La Mirada, CA 90638
877-999-4728 (Toll Free) 714-523-0845 (fax)
www.isatsb.com

SUSPENDED PLUMBING PIPING (CONTINUED)

8. For the purpose of calculating weight, pipe weights are to be the operating weights, include weight of pipe insulation. If actual pipe weight is unknown, refer to pipe weight charts in Section X.

9. Tests, Special Inspections and Observations (TIO) shall be in accordance with HCAI approved TIO form for the project.

10. Brace spacing shall not exceed the maximum allowable brace spacing as engineered by ISAT. Refer to individual ISAT bracing charts compiled by pipe size or trapeze weight. See Index Page C0.1.

11. When calculating seismic design force for pipes constructed of low deformability materials such as cast iron, the value $R_p = 3.0$ (e.g. cast iron piping with non-flexible connections) is to be utilized. For drain, waste and vent piping, the value $R_p = 2.5$ (e.g. cast iron piping with flexible connections) is to be utilized.

12. All seismic bracing assemblies shall utilize ISAT supplied, proprietary seismic brackets unless noted otherwise. Any substitution shall be subject to ISAT review and HCAI approval.

13. Every pipe run which requires bracing shall have a minimum of two transverse braces and one longitudinal brace. For the purposes of this Manual, a "run" is defined as suspended piping of 10 foot minimum straight length.

14. Rigid grooved coupling listed for UL Standard 213 shall be permitted in horizontal run of pipe. Flexible grooved coupling listed for UL Standard 213 shall be permitted in vertical risers (to accommodate drift) and other locations (e.g. seismic separation, equipment nozzle, etc.) to accommodate small movement and/or rotation. Non-UL listed groove couplings shall not be used unless approved on project specific basis. Cast-iron (no-hub) pipe brace couplings shall be manufactured in accordance with ASTM C1540, shall be certified in accordance with FM 1680 Class 1 and gravity hangers shall be spaced per the requirements of Table 313.3 of the 2019 California Plumbing Code (CPC 2019) for no-hub cast iron pipe.

    Exception: cast iron (no-hub) pipe joined by couplings not satisfying ASTM C1540 or not certified in accordance w/ FM 1680 class 1 shall be designed on a project specific basis & shall require project specific HCAI approval.

15. A longitudinal brace at a 90 degree change in direction may act as a transverse brace if it is within 2 feet of the change in direction or located within prescribed distances from the change in direction as shown on pages A1.0P and A2.0P. The brace arm and anchorage must be sized to meet or exceed the requirements of the total brace reaction. A brace arm for a smaller distributed utility is not to be utilized as transverse or longitudinal brace for an adjoining run of a larger distributed utility.

REVIEWED FOR CODE COMPLIANCE
HCAI
OPM-0403
BY: William Staehlin
DATE: 01-26-2024
OFFICE OF PROJECT MANAGEMENT PROCESS

REGISTERED PROFESSIONAL ENGINEER
MARCIN WASAZNIK
S 6612
STRUCTURAL
STATE OF CALIFORNIA

ISAT
A Division of Tomarco Contractor Specialties

International Seismic Application Technology
14848 Northam Street, La Mirada, CA 90638
877-999-4728 (Toll Free) 714-523-0845 (fax)
www.isatsb.com

SUSPENDED PLUMBING PIPING (CONTINUED)

16. A transverse brace at a 90 degree change in direction may act as a longitudinal brace if it is within 2 feet of the change in direction or located within prescribed distances from the change in direction as shown on pages A1.0P and A2.0P. The brace arm and anchorage must be sized to meet or exceed the requirements of the total brace reaction. A brace arm for a smaller distributed utility is not to be utilized as transverse or longitudinal brace for an adjoining run of a larger distributed utility.

17. A transverse brace for a smaller pipe is not to be utilized as the longitudinal brace for an adjoining run of larger pipe. A longitudinal brace for a smaller pipe is not to be utilized as the transverse brace for an adjoining run of larger pipe except when specifically engineered by ISAT technical support.

18. Except where transverse braces are acting as a longitudinal brace at a change in direction, all longitudinal brace locations, for individually supported pipe, shall employ an ISAT Longitudinal Restraint Device (LRD) as illustrated on F7 series pages and installed per the individual detail drawings within section B of the manual.

19. Standard supports in accordance with ASME B31, NFPA 13-16 or MSS SP-58 designed by tested load rating or analysis considering all loads are acceptable. In addition, the stiffness of the support, where appropriate, shall be designed such that the seismic load path for the component performs its intended function. There shall be a vertical support within 12'' of all seismic braces to ensure a seismic load path.

20. Vertical support spacing for trapeze mounted pipe runs is to be the lesser of 10 foot maximum or the maximum as dictated by the CPC 2019 or CMC 2019.

21. Each layer of a multi-layer trapeze rack shall be braced individually based on the weight of the individual layer, or as specifically engineered by ISAT.

22. This OPM is limited to seismic bracing of interior pipes only. It does not address other loads such as, but not limited to, those generated by thermal growth, pressure, fluid dynamics, pipe rupture, or movement of equipment to which brace components are attached. It does not address components that cross seismic separation of buildings. Nor does it address components (other than pipe risers) attached to portions of the structure or equipment that will experience relative seismic displacement. Project specific design and HCAI approval shall be required for design not covered by the OPM.

23. For rigid brace arm assembly, solid, punched or short slot minimum 12 gauge steel channel (pg H2) or EMT sizes per page E0.1 shall be used. Brace arm design values shown on Page E1.1 , E1.2, and E1.3.

REVIEWED FOR CODE COMPLIANCE
HCAI
OPM-0403
By: William Staehlin
DATE: 01-26-2024
CALIFORNIA BUILDING CODE 2019

SUSPENDED PLUMBING PIPING (CONTINUED)

24. Vertical pipe systems supported at each floor shall be considered seismically braced if the pipe has a riser clamp or bracket appropriately designed for seismic and vertical loads or if the penetration through each floor is tightly packed with approved insulation or firestops, satisfying NFPA 13-16 Section 9.3.5.8.5 and floor to floor spacing does not exceed maximum spacing tabulated in the C-series Bracing tables. Tops of risers exceeding 3 ft. shall be provided with a four-way brace. Where this bracing is attached to the horizontal piping, it shall be installed within 2 ft. of the riser.

25. Re-insulate any locations where pipe insulation had been originally removed for direct attachment of Longitudinal Restraint Devices (LRD) to single hung pipe.

26. When using back-to-back 12 gauge steel channel as a trapeze assembly, pipe may be mounted to both the top and the underside provided the limitations of Page G2 and G3 are not exceeded.

VIBRATION ISOLATED PIPING

1. ISAT includes designs for the seismic restraint of vibration isolated piping suspended from spring hangers. However, design of the vibration isolated support system itself must be accomplished separately on a job specific basis by a qualified engineer. Hanger design shall satisfy overstrength factor (Ω_0) in accordance with ASCE7, as amended in 2019 CBC section 1617A.1.23 and springs must have HCAI approval for strength and stiffness.

2. Install vibration isolation hardware per manufacturer's instructions to achieve the required degree of isolation and/or deflection.

3. Vibration isolated hangers that also require seismic bracing shall be braced using galvanized steel cable with ISAT designed and tested seismic brackets.

4. Cable (reference pages E4.2, E4.3, E4.4, or E4.7) to be installed with sufficient slack to accommodate, but not exceed, the vibration isolators calculated deflection. See manufacturer's vibration isolator specifications. Do not tension cables to the extent that they support gravity loads. Cable installation is to be symmetrical.

5. Cable: 7x19 steel small diameter specialty cord per ASTM A1023/A1023M table 7.

REVIEWED FOR CODE COMPLIANCE
HCAi
OPM-0403
BY: William Staehlin
DATE: 01-26-2024
CALIFORNIA BUILDING CODE, 2022

REGISTERED PROFESSIONAL ENGINEER
MARCIN WASAZNIK
S-6612
STRUCTURAL
STATE OF CALIFORNIA

ISAT
A Division of Tomarco Contractor Specialties

International Seismic Application Technology
14848 Northam Street, La Mirada, CA 90638
877-999-4728 (Toll Free) 714-523-0845 (fax)
www.isatsb.com

2019 CBC HCAI SEISMIC BRACING NOTES

TRAPEZE ASSEMBLY - NO BRACING REQUIREMENTS

ALL CRITERIA SHOWN MUST BE MET

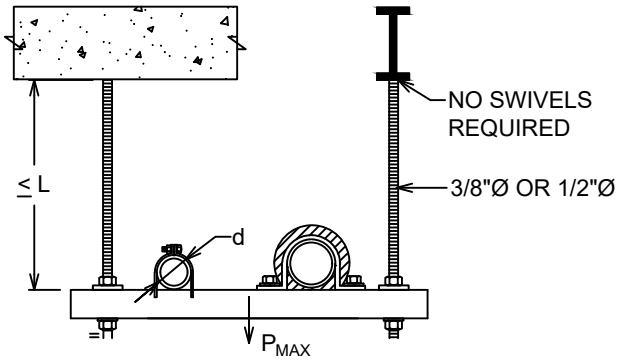

2019 CBC

I_p	SDC	d	L	P_{MAX}
1.0	D, E, F	≤ 3"	12"	100 lbs
1.5	D, E, F	≤ 2"	12"	100 lbs

SINGLE HUNG ASSEMBLY - NO BRACING REQUIREMENTS

ALL CRITERIA SHOWN MUST BE MET

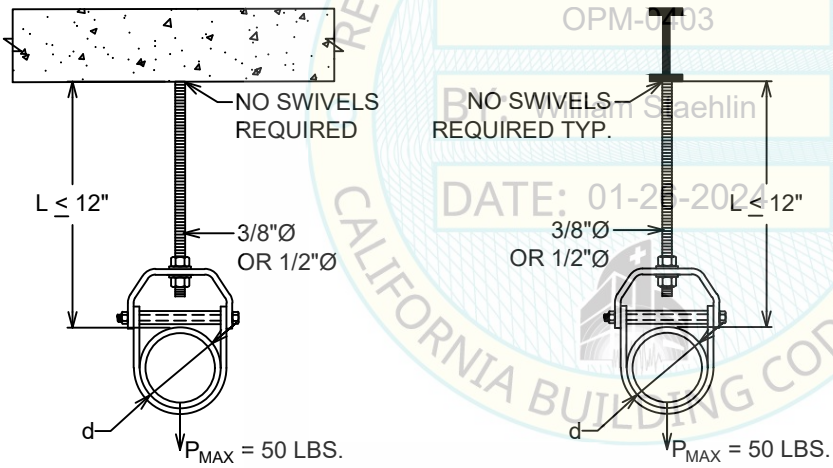

2019 CBC

		I_p	SDC	d
$R_p \geq 4.5$	SINGLE HUNG	1.0	D, E, F	≤ 3"
		1.5	D, E, F	≤ 1"

REVIEWED FOR CODE COMPLIANCE
OPM-0403
Reviewed by William Staehlin
DATE: 01-26-2024
CALIFORNIA BUILDING CODE, 2022

GENERAL NOTES (APPLIES TO TRAPEZE AND SINGLE ROD HANGERS)

1. SUPPORT PIPING WITH ALL THREAD RODS.
2. EACH HANGER LENGTH IN THE RUN MUST BE LESS THAN THE LENGTH "L".
3. P_{MAX}= MAXIMUM TOTAL WEIGHT SUPPORTED BY ANY SINGLE TRAPEZE OR IN THE CASE OF A SINGLE HUNG UTILITY, MAXIMUM TOTAL WEIGHT SUPPORTED BY ANY SINGLE HANGER.
4. PROVISIONS ARE MADE TO ELIMINATE SEISMIC IMPACT FOR COMPONENTS VULNERABLE TO IMPACT.
5. FLEXIBLE CONNECTIONS, EXPANSION LOOPS, OR OTHER ASSEMBLIES ARE PROVIDED TO ACCOMMODATE THE RELATIVE DISPLACEMENT BETWEEN COMPONENT AND PIPING, WHERE THE PIPING SYSTEM IS POSITIVELY ATTACHED TO THE STRUCTURE.

DROP LENGTH EXCLUSIONS - PIPING

REGISTERED PROFESSIONAL ENGINEER
MARCIN WASAZNIK
S 6612
STRUCTURAL
STATE OF CALIFORNIA

ISAT
A Division of Tomarco Contractor Specialties

International Seismic Application Technology
14848 Northam Street, La Mirada, CA 90638
877-999-4728 (Toll Free) 714-523-0845 (fax)
www.isatsb.com

Rev. 0
06/02/23

Page
10.6a

2022 CBC HCAI SEISMIC BRACING NOTES

SUSPENDED ELECTRICAL SYSTEMS

1. In compliance with the 2022 CBC, seismic bracing is to be installed for all suspended distributed electrical systems and suspended electrical equipment per ISAT's engineered bracing tables, ISAT's installation details and the following criteria.

BRACING REQUIREMENTS FOR ELECTRICAL SERVICES		
Seismic Design Category	**I_P [a]**	**Service Bracing Requirements**
D, E, F	≥1.0	Brace Conduit ≥ 2-1/2" Trade Size Brace Trapeze Assemblies Supporting Raceways > 5 Lbs/Lf
EXCEPTIONS	ALL	Light Fixtures Suspended From the Structure Having Attachments Designed To Accommodate 1.4 x Weight In Both the Vertical and Horizontal Directions and With 360° Range of Motion. And In-Lay Ceiling Grid Light Fixtures That Are Positively Attached To The Suspended Ceiling System < 56 Lbs With Safety Wires[(b)] Per ASTM E580. Refer to ASCE 7-16 Section 13.5.6.2, ASTM E580 & 2022 CBC 1617A.1.21 for additional requirements.

a. I_P = Component Importance Factor
b. (2) No. 12-ga safety wires connected from the fixture housing to the structure above; not necessary for these safety wires to be taut

REVIEWED FOR CODE COMPLIANCE
HCAI
OPM-0403
BY: William Staehlin
DATE: 01-26-2024
CALIFORNIA BUILDING CODE, 2022

2. Where bracing is allowed to be omitted, connections between any fixed juncture, equipment or component are to be installed with adequate flexibility to accommodate differential displacements.

3. Conduit ≥ 2.5" connected to panels, cabinets or other equipment to be installed with flexible connections or designed for seismic forces and seismic relative displacements.

4. For Seismic Design Categories D, E or F, brace suspended components where component Ip > 1.0. Component importance factor, Ip, for design of supports and attachments shall be in accordance with the 2022 CBC Section 1617A.1.17 for HCAI 1 & 4 buildings. Component importance factor, Ip = 1.5, for HCAI 1R, 2 & 5 buildings shall be in accordance with 2022 CBC Section 1613.4.

5. Where the actual weight of the conduit plus conductor is unknown, refer to ISAT's conduit weight charts, Section X.

REGISTERED PROFESSIONAL ENGINEER
MARCIN WASAZNIK
S 6612
STRUCTURAL
STATE OF CALIFORNIA

ISAT
A Division of Tomarco Contractor Specialties

International Seismic Application Technology
14848 Northam Street, La Mirada, CA 90638
877-999-4728 (Toll Free) 714-523-0845 (fax)
www.isatsb.com

SUSPENDED ELECTRICAL SYSTEMS (CONTINUED)

6. Where the component does not convey hazardous content, seismic design is not required for:
   a. Components weighing ≤ 20 lbs or distributed systems ≤ 5 lbs/lf (Ip ≥ 1.0, SDC D, E, F) that are positively attached to the structure and supports & attachments are detailed on the plans, except equipment with hazardous contents, attachments to be shown on construction documents irrespective of weight (2022 CBC, 1617A.1.18 ASCE 7, Section 13.1.4).
   b. Components weighing less than 400 lbs., with a center of mass located 4 ft or less above the adjacent floor, the component is attached via flexible connections between itself and associated utilities (conduit, piping, etc.) and the component is positively attached to the floor (2022 CBC, 1617A.1.18 ASCE 7, Section 13.1.4) except components requiring Special Seismic Certification.

7. Seismic restraints are not required for conduit, cable trays and other electrical distributed systems (raceways) if the following conditions are met for the full length of the run (2022 CBC Section 1617A.1.24):
   a. Cable tray 12 ga. minimum or raceway is positively attached to the structure. Cable tray must be approved on a project specific basis or preapproved by HCAi. Spacing limits set by the manufacturer must not be exceeded. Cable tray brace spacing must be approved or preapproved by HCAi.
   b. Flexible connections or other assemblies are provided between cable tray or raceway and associated components to accommodate relative displacement.
   c. Trapeze assemblies with ⅜" or ½" diameter rod hangers ≤ 12" from the conduit, cable tray, or raceway support point to the connection at the supporting structure are used to support the cable tray or raceway, and the total weight supported by any single trapeze is 100 lbs or less.
   d. The conduit, cable tray, or raceway is supported by individual rod hangers ⅜" or ½" diameter, and each hanger in the raceway run is ≤ 12" in length from the conduit, cable tray, or raceway support point connection to the supporting structure, and the total weight supported by any single rod is 50 lbs or less.

8. Tests, Special Inspections and Observations (TIO) shall be in accordance with HCAI approved TIO form for the project.

9. Brace spacing shall not exceed the maximum allowable brace spacing as engineered by ISAT. Refer to ISAT bracing charts compiled by conduit size or trapeze weight. See C-Series pages.

10. All seismic bracing assemblies shall utilize ISAT supplied, proprietary, seismic brackets unless noted otherwise. Any substitution shall be subject to ISAT review and HCAI approval.

REVIEWED FOR CODE COMPLIANCE HCAI BY: William Staehlin DATE: 01/26/2024 STATE OF CALIFORNIA BUILDING CODE, 2019

REGISTERED PROFESSIONAL ENGINEER MARCIN WASAZNIK S-6612 STRUCTURAL STATE OF CALIFORNIA

ISAT
A Division of Tomarco Contractor Specialties

International Seismic Application Technology
14848 Northam Street, La Mirada, CA 90638
877-999-4728 (Toll Free) 714-523-0845 (fax)
www.isatsb.com

SUSPENDED ELECTRICAL SYSTEMS (CONTINUED)

11. Every raceway which requires bracing shall have a minimum of two transverse braces and one longitudinal brace. For the purposes of this Manual, a "run" is defined as suspended raceway of 10 foot minimum straight length.

12. A longitudinal brace at a 90 degree change in direction may act as a transverse brace if it is within 2 feet of the change in direction or located within prescribed distances from the change in direction as shown on pages A1.0E and A2.0E. The brace arm and anchorage must be sized to meet or exceed the requirements of the total brace reaction. A brace arm for a smaller distributed utility is not to be utilized as transverse or longitudinal brace for an adjoining run of a larger distributed utility.

13. A transverse brace at a 90 degree change in direction may act as a longitudinal brace if it is within 2 feet of the change in direction or located within prescribed distances from the change in direction as shown on pages A1.0E and A2.0E. The brace arm and anchorage must be sized to meet or exceed the requirements of the total brace reaction. A brace arm for a smaller distributed utility is not to be utilized as transverse or longitudinal brace for an adjoining run of a larger distributed utility.

14. A transverse brace for a smaller raceway is not to be utilized as the longitudinal brace for an adjoining run of a larger raceway. A longitudinal brace for a smaller raceway is not to be utilized as the transverse brace for an adjoining run of a larger raceway.

15. All longitudinal brace locations, for individually supported conduit, shall employ an ISAT Longitudinal Restraint Device (LRD) as illustrated on F7 series pages and installed per the individual detail drawings within section B of the manual.

16. Standard supports in accordance with ASME B31, NFPA 13-22 or MSS SP-58 designed by tested load rating or analysis considering all loads are acceptable. There shall be a vertical support within 12'' of all seismic braces to ensure a seismic load path.

17. Vertical support spacing for electrical components is to be the lesser of 10 foot maximum, or the minimum as dictated by the California Electrical Code, 2022 (CEC 2022), as listed in the project specifications, or Authority Having Jurisdiction (AHJ).

18. Each layer of a multi-layer trapeze rack shall be braced individually based on the weight of the individual layer, or as specifically engineered by ISAT.

19. When used to construct a rigid brace arm assembly, minimum 12 gauge steel channel shall be solid, punched or short slot channel. Brace arm design values shown on Page E1.1 and E1.2.

REVIEWED FOR CODE COMPLIANCE
ISAT
OPM-0403
BY: William Staehlin
DATE: 01-26-2024
CALIFORNIA BUILDING CODE, 2022

REGISTERED PROFESSIONAL ENGINEER
MARCIN WASAZNIK
S 6612
STRUCTURAL
STATE OF CALIFORNIA

ISAT
A Division of Tomarco Contractor Specialties

International Seismic Application Technology
14848 Northam Street, La Mirada, CA 90638
877-999-4728 (Toll Free) 714-523-0845 (fax)
www.isatsb.com

SUSPENDED ELECTRICAL SYSTEMS (CONTINUED)

20. When using back-to-back 12 gauge minimum steel channel as a trapeze assembly, raceways may be mounted to both the top and the underside provided the limitations of Page G2 and G3 are not exceeded.

21. Pull boxes in-line with conduit are not electro-mechanical devices and are not required to be seismically braced unless otherwise called for in the construction documents. Brace pull boxes greater than 75 lbs.

REVIEWED FOR CODE COMPLIANCE
HCAi
OPM-0403
BY: William Staehlin
DATE: 01-26-2024
CALIFORNIA BUILDING CODE, 2022

REGISTERED PROFESSIONAL ENGINEER
MARCIN WASAZNIK
S 6612
STRUCTURAL
STATE OF CALIFORNIA

ISAT
A Division of Tomarco Contractor Specialties

International Seismic Application Technology
14848 Northam Street, La Mirada, CA 90638
877-999-4728 (Toll Free) 714-523-0845 (fax)
www.isatsb.com

2022 CBC HCAI SEISMIC BRACING NOTES

TRAPEZE ASSEMBLY - NO BRACING REQUIREMENTS

ALL CRITERIA SHOWN MUST BE MET

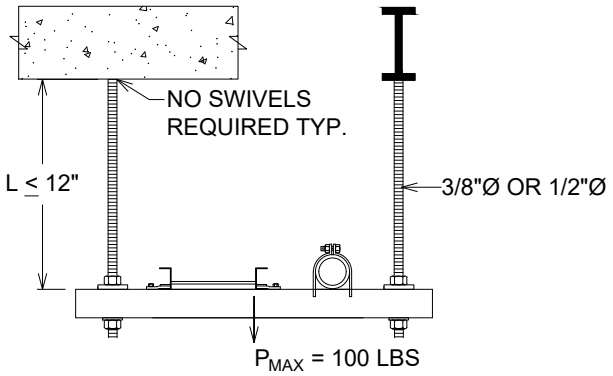

SINGLE ROD ASSEMBLY - NO BRACING REQUIREMENTS

ALL CRITERIA SHOWN MUST BE MET

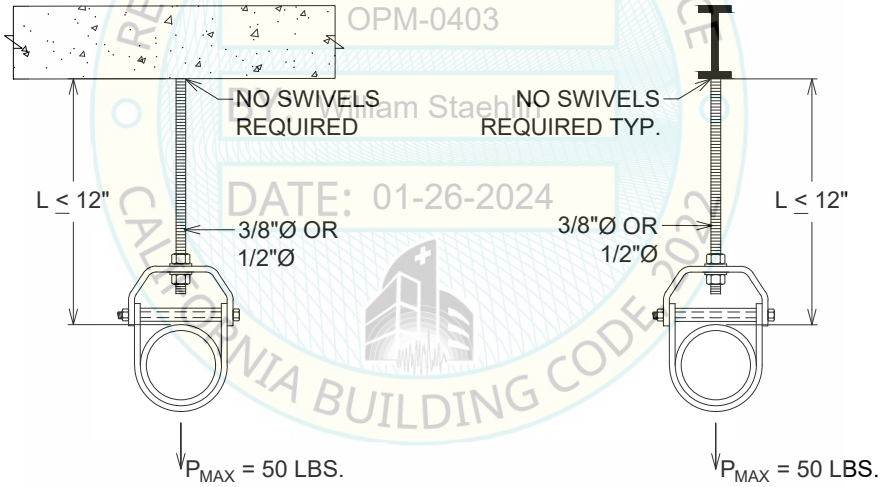

REVIEWED FOR CODE COMPLIANCE
OPM-0403
By: William Staehlin
DATE: 01-26-2024
CALIFORNIA BUILDING CODE 2022

GENERAL NOTES (APPLIES TO TRAPEZE AND SINGLE ROD HANGERS)

1. SUPPORT ELECTRICAL RACEWAYS WITH ALL THREAD RODS.
2. EACH HANGER LENGTH IN THE RUN MUST BE LESS THAN THE LENGTH "L".
3. P_{MAX}= MAXIMUM TOTAL WEIGHT SUPPORTED BY ANY SINGLE TRAPEZE OR IN THE CASE OF A SINGLE HUNG UTILITY, MAXIMUM TOTAL WEIGHT SUPPORTED BY ANY SINGLE HANGER.
4. FLEXIBLE CONNECTIONS OR OTHER ASSEMBLIES ARE PROVIDED BETWEEN THE CABLE TRAY OR RACEWAY & ASSOCIATED COMPONENTS TO ACCOMMODATE RELATIVE DISPLACEMENT, WHERE THE CABLE TRAY OR RACEWAY IS POSITIVELY ATTACHED TO THE STRUCTURE.

DROP LENGTH EXCLUSIONS - ELECTRICAL

CONDUIT, CABLE TRAY & RACEWAYS

REGISTERED PROFESSIONAL ENGINEER
MARCIN WASAZNIK
S 6612
STRUCTURAL
STATE OF CALIFORNIA

ISAT
A Division of Tomarco Contractor Specialties
International Seismic Application Technology
14848 Northam Street, La Mirada, CA 90638
877-999-4728 (Toll Free) 714-523-0845 (fax)
www.isatsb.com

Rev. 0
08/15/23

Page
7.5b

2022 CBC HCAI SEISMIC BRACING NOTES

SUSPENDED MECHANICAL PIPING

1. In compliance with the 2022 CBC, seismic bracing is to be installed on all suspended pipe and equipment per ISAT's engineered bracing tables, ISAT's installation details and the following criteria:

BRACING REQUIREMENTS FOR MECHANICAL PIPING SERVICES		
Seismic Design Category	**I_P [a]**	**Service Bracing Requirements**
Steel or Copper Piping Systems [(c)(d)(e)(f)(g)]		
D, E, F	1.0	Brace All Pipe > 3"
	>1.0	Brace All Pipe > 1" Exception: Pipes With Non-Hazardous Content With An Operating Weight ≤ 5 Lbs/Lf: - Sch. 40 Steel Vent Lines ≤ 2" Diameter - Full Sch. 40 Steel Lines ≤ 1-1/2" Diameter - Copper Vent Lines ≤ 3-1/2" Diameter - Full Copper Lines ≤ 2" Diameter
	≥1.0	Brace All Trapeze Assemblies Supporting Loads > 5 Lbs/Lf
EXCEPTIONS	All	Piping Systems Designed And Braced in Accordance with ASCE 7, Section 13.6.7.1
Cast Iron Piping Systems [(b)(c)(d)(f)(g)]		
D, E, F	All	Brace All Pipe With Non-Hazardous Content With An Operating Weight > 5 Lbs/Lf: - No-Hub Cast Iron Gravity Lines > 2" Diameter - No-Hub Cast Iron Vent Lines, Storm Drains & Overflow Drains > 3" Diameter

a. I_p = Component Importance Factor
b. Refer to Note 11 on page 8.3b
c. Provisions are made to avoid damaging impact
d. Use of flexible connectors required between unbraced piping and components
e. Applicable to pipe having an $R_p \geq 4.5$ in Table 13.6-1, ASCE 7-16
f. Hazardous: Including, but not limited to medical gases, fuel oil, natural gas, acid waste, methane, fire protection, fume hood exhaust, BSC exhaust, airborne infection isolation (AII) exhaust, ED decontamination exhaust, type I kitchen grease exhaust, steam and condensate piping, steam safety valves vents
g. Non-hazardous: Including, but not limited to, medical vacuum, compressed air, water, medical air

REVIEWED FOR CODE COMPLIANCE
HCAI
OPM-0403
BY: William Staehlin
DATE: 01-26-2024
CALIFORNIA BUILDING CODE, 2022

REGISTERED PROFESSIONAL ENGINEER
MARCIN WASAZNIK
S 6612
STRUCTURAL
STATE OF CALIFORNIA

ISAT
A Division of Tomarco Contractor Specialties

International Seismic Application Technology
14848 Northam Street, La Mirada, CA 90638
877-999-4728 (Toll Free) 714-523-0845 (fax)
www.isatsb.com

SUSPENDED MECHANICAL PIPING (CONTINUED)

a. For Seismic Design Categories D, E or F, brace suspended components where component Ip > 1.0. Component importance factor, Ip, for design of supports and attachments shall be in accordance with the 2022 CBC Section 1617A.1.17 for HCAI 1 & 4 buildings. Component importance factor, Ip = 1.5, for HCAI 1R, 2 & 5 buildings shall be in accordance with 2022 CBC Section 1613.4.

2. Where the component does not convey hazardous content, seismic design is not required for:
   a. Components weighing ≤ 20 lbs or distributed systems ≤ 5 lbs/lf (Ip ≥ 1.0, SDC D, E, F) that are positively attached to the structure & supports & attachments are detailed on the plans, except equipment with hazardous contents, attachments to be shown on construction documents irrespective of weight (2022 CBC, 1617A.1.18 ASCE 7, Section 13.1.4, Section 3(a)).
   b. Components weighing less than 400 lbs., with a center of mass located 4 ft or less above the adjacent floor or roof, the component is attached via flexible connections between itself and associated utilities (conduit, piping, etc.) and the component is positively attached to the floor or roof (2022 CBC, 1617A.1.18 ASCE 7, Section 13.1.4) except components requiring Special Seismic Certification.

3. For any situation in which seismic bracing is allowed to be omitted, flexible connections are to be provided between the components and piping. Provisions are to be made to avoid or protect the pipe from impact.

4. Per ASCE 7-16, Section 13.4.1, do not use an Rp factor greater than 6.0 when calculating Fp for design of the attachment.

5. Un-braced, suspended piping attached to components is to be installed with adequate flexibility to accommodate differential displacements. Flexible connections in piping required in 2022 CBC, 1617A.1.26 ASCE 7, Section 13.6.7.3 are not required where pipe is rigidly attached to the same floor (or wall, as applicable) that provides vertical and lateral support for the equipment, or to a fixture.

6. Flexible connections in piping are required at seismic separation joints and shall be detailed to accommodate the seismic relative displacements at connections.

7. Seismic restraints are not required for piping components if the following conditions are met for the full length of the run:
   a. Piping system is positively attached to the structure.
   b. Flexible connections, expansion loops, or other assemblies are provided to accommodate the relative displacement between component and piping.
   c. Trapeze and single support components meet or exceed any one of the limitations in 2022 CBC, 1617A.1.26 ASCE 7, Section 13.6.7.3 - 1 through 2.b. Refer to page 8.6b.

REVIEWED FOR CODE COMPLIANCE
OPM-0403
BY: William Staehlin
DATE: 01-26-2024
CALIFORNIA BUILDING CODE 2022

REGISTERED PROFESSIONAL ENGINEER
MARCIN WASAZNIK
S 6612
STRUCTURAL
STATE OF CALIFORNIA

ISAT
A Division of Tomarco Contractor Specialties

International Seismic Application Technology
14848 Northam Street, La Mirada, CA 90638
877-999-4728 (Toll Free) 714-523-0845 (fax)
www.isatsb.com

SUSPENDED MECHANICAL PIPING (CONTINUED)

8. For the purpose of calculating weight, pipe weights are to be the operating weights, include weight of pipe insulation as required. If actual pipe weight is unknown, refer to pipe weight charts in Section X.

9. Tests, Special Inspections and Observations (TIO) shall be in accordance with HCAI approved TIO form for the project.

10. Brace spacing shall not exceed the maximum allowable brace spacing as engineered by ISAT. Refer to individual ISAT bracing charts compiled by pipe size or trapeze weight. See Index Page C0.1.

11. When calculating seismic design force for pipes constructed of low deformability materials such as cast iron, the value $R_p = 3.0$ (e.g. cast iron piping with non-flexible connections) is to be utilized. For drain, waste and vent piping, the value $R_p = 2.5$ (e.g. cast iron piping with flexible connections) is to be utilized.

12. All seismic bracing assemblies shall utilize ISAT supplied, proprietary seismic brackets unless noted otherwise. Any substitution shall be subject to ISAT review and HCAI approval.

13. Every pipe run which requires bracing shall have a minimum of two transverse braces and one longitudinal brace. For the purposes of this Manual, a "run" is defined as suspended piping of 10 foot minimum straight length.

14. Rigid grooved coupling listed for UL Standard 213 shall be permitted in horizontal run of pipe. Flexible grooved coupling listed for UL Standard 213 shall be permitted in vertical risers (to accommodate drift) and other locations (e.g. seismic separation, equipment nozzle, etc.) to accommodate small movement and/or rotation. Non-UL listed groove couplings shall not be used unless approved on project specific basis. Cast-iron (no-hub) pipe brace couplings shall be manufactured in accordance with ASTM C1540, shall be certified in accordance with FM 1680 Class 1 and gravity hangers shall be spaced per the requirements of Table 313.3 of the 2022 California Plumbing Code (CPC 2022) for no-hub cast iron pipe.

    Exception: cast iron (no-hub) pipe joined by couplings not satisfying ASTM C1540 or not certified in accordance w/ FM 1680 class 1 shall be designed on a project specific basis & shall require project specific HCAI approval.

15. A longitudinal brace at a 90 degree change in direction may act as a transverse brace if it is within 2 feet of the change in direction or located within prescribed distances from the change in direction as shown on pages A1.0P and A2.0P. The brace arm and anchorage must be sized to meet or exceed the requirements of the total brace reaction. A brace arm for a smaller distributed utility is not to be utilized as transverse or longitudinal brace for an adjoining run of a larger distributed utility.

REVIEWED FOR CODE COMPLIANCE
HCAi
OPM-0403
BY: William Staehlin
DATE: 01-26-2024
CALIFORNIA BUILDING CODE 2022

REGISTERED PROFESSIONAL ENGINEER MARCIN WASAZNIK S 6612 STRUCTURAL STATE OF CALIFORNIA

ISAT
A Division of Tomarco Contractor Specialties

International Seismic Application Technology
14848 Northam Street, La Mirada, CA 90638
877-999-4728 (Toll Free) 714-523-0845 (fax)
www.isatsb.com

Rev. 0
05/25/23
Page
8.3b

01/26/2024 OPM-0403: Reviewed for Code Compliance by William Staehlin Page 83 of 1157

SUSPENDED MECHANICAL PIPING (CONTINUED)

16. A transverse brace at a 90 degree change in direction may act as a longitudinal brace if it is within 2 feet of the change in direction or located within prescribed distances from the change in direction as shown on pages A1.0P and A2.0P. The brace arm, anchorage, supports & attachments must be sized to meet or exceed the requirements of the total brace reaction. A brace arm for a smaller distributed utility is not to be utilized as transverse or longitudinal brace for an adjoining run of a larger distributed utility.

17. A transverse brace for a smaller pipe is not to be utilized as the longitudinal brace for an adjoining run of larger pipe. A longitudinal brace for a smaller pipe is not to be utilized as the transverse brace for an adjoining run of larger pipe except when specifically engineered by ISAT technical support.

18. Except where transverse braces are acting as a longitudinal brace at a change in direction, all longitudinal brace locations, for individually supported pipe, shall employ an ISAT Longitudinal Restraint Device (LRD) as illustrated on F7 series pages and installed per the individual detail drawings within section B of the manual.

19. Standard supports in accordance with ASME B31, NFPA 13-22 or MSS SP-58 designed by tested load rating or analysis considering all loads are acceptable. In addition, the stiffness of the support, where appropriate, shall be designed such that the seismic load path for the component performs its intended function. There shall be a vertical support within 12'' of all seismic braces to ensure a seismic load path.

20. Vertical support spacing for trapeze mounted pipe runs is to be the lesser of 10 foot maximum or the maximum as dictated by the CPC 2022 or CMC 2022.

21. Each layer of a multi-layer trapeze rack shall be braced individually based on the weight of the individual layer, or as specifically engineered by ISAT. This OPM is limited to seismic bracing of interior pipes only. It does not address other loads such as, but not limited to, those generated by thermal growth, pressure, fluid dynamics, pipe rupture, or movement of equipment to which brace components are attached. It does not address components that cross seismic separation of buildings. Nor does it address components (other than pipe risers) attached to portions of the structure or equipment that will experience relative seismic displacement. Project specific design and HCAI approval shall be required for design not covered by the OPM.

22. For rigid brace arm assembly, solid, punched or short slot minimum 12 gauge steel channel (pg H2) or EMT sizes per page E0.1 shall be used. Brace arm design values shown on Page E1.1 , E1.2, and E1.3.

REVIEWED FOR CODE COMPLIANCE
HCAI
OPM-0403
BY: William Staehlin
DATE: 01-26-2024
CALIFORNIA BUILDING CODE 2022

REGISTERED PROFESSIONAL ENGINEER
MARCIN WASAZNIK
S-6612
STRUCTURAL
STATE OF CALIFORNIA

ISAT
A Division of Tomarco Contractor Specialties

International Seismic Application Technology
14848 Northam Street, La Mirada, CA 90638
877-999-4728 (Toll Free) 714-523-0845 (fax)
www.isatsb.com

SUSPENDED MECHANICAL PIPING (CONTINUED)

23. Vertical pipe systems supported at each floor shall be considered seismically braced if the pipe has a riser clamp or bracket appropriately designed for seismic and vertical loads or if the penetration through each floor is tightly packed with approved insulation or firestops, satisfying NFPA 13-22 Section 9.3.5.8.5 and floor to floor spacing does not exceed maximum spacing tabulated in the C-series Bracing tables. Tops of risers exceeding 3 ft. shall be provided with a four-way brace. Where this bracing is attached to the horizontal piping, it shall be installed within 2 ft. of the riser.

24. Re-insulate any locations where pipe insulation had been originally removed for direct attachment of Longitudinal Restraint Devices (LRD) to single hung pipe.

25. When using back-to-back 12 gauge steel channel as a trapeze assembly, pipe may be mounted to both the top and the underside provided the limitations of Page G2 and G3 are not exceeded.

VIBRATION ISOLATED PIPING

1. ISAT includes designs for the seismic restraint of vibration isolated piping suspended from spring hangers. However, design of the vibration isolated support system itself must be accomplished separately on a job specific basis by a qualified engineer. Hanger design shall satisfy overstrength factor (Ω_0) in accordance with ASCE7, as amended in 2022 CBC section 1617A.1.23 and springs must have HCAI approval for strength and stiffness.

2. Install vibration isolation hardware per manufacturer's instructions to achieve the required degree of isolation and/or deflection.

3. Vibration isolated hangers that also require seismic bracing shall be braced using galvanized steel cable with ISAT designed and tested seismic brackets.

4. Cable (reference pages E4.2, E4.3, E4.4, or E4.7) to be installed with sufficient slack to accommodate, but not exceed, the vibration isolators calculated deflection. See manufacturer's vibration isolator specifications. Do not tension cables to the extent that they support gravity loads. Cable installation is to be symmetrical.

5. Cable: 7x19 steel small diameter specialty cord per ASTM A1023/A1023M table 7.

REVIEWED FOR CODE COMPLIANCE
HCAi
OPM-0403
BY: William Staehlin
DATE: 01-26-2024
CALIFORNIA BUILDING CODE, 2022

REGISTERED PROFESSIONAL ENGINEER
MARCIN WASAZNIK
S 6612
STRUCTURAL
STATE OF CALIFORNIA

ISAT
A Division of Tomarco Contractor Specialties

International Seismic Application Technology
14848 Northam Street, La Mirada, CA 90638
877-999-4728 (Toll Free) 714-523-0845 (fax)
www.isatsb.com

2022 CBC HCAI SEISMIC BRACING NOTES

TRAPEZE ASSEMBLY - NO BRACING REQUIREMENTS

ALL CRITERIA SHOWN MUST BE MET

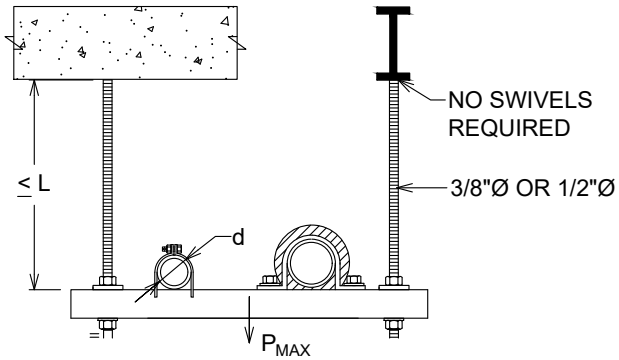

2022 CBC

I_p	SDC	d	L	P_{MAX}
1.0	D, E, F	≤ 3"	12"	100 lbs
1.5	D, E, F	≤ 2"	12"	100 lbs

SINGLE HUNG ASSEMBLY - NO BRACING REQUIREMENTS

ALL CRITERIA SHOWN MUST BE MET

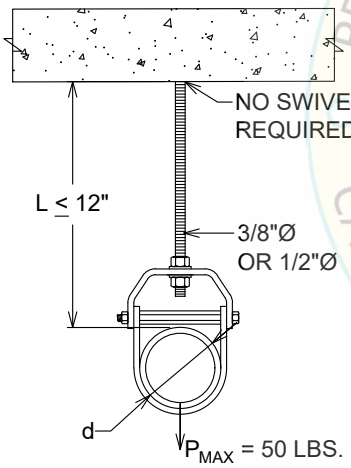

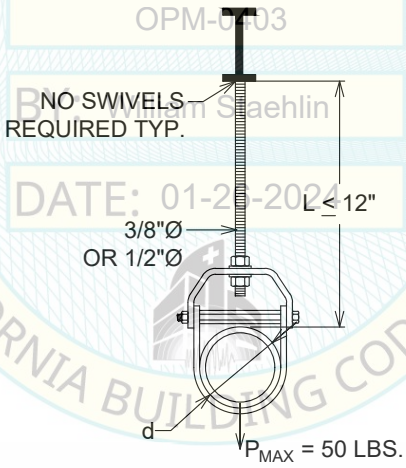

2022 CBC

		I_p	SDC	d
$R_p \geq 4.5$	SINGLE HUNG	1.0	D, E, F	≤ 3"
		1.5	D, E, F	≤ 1"

REVIEWED FOR CODE COMPLIANCE
OPM-0403
Reviewed by William Staehlin
DATE: 01-26-2024
CALIFORNIA BUILDING CODE, 2022

GENERAL NOTES (APPLIES TO TRAPEZE AND SINGLE ROD HANGERS)

1. SUPPORT PIPING WITH ALL THREAD RODS.
2. EACH HANGER LENGTH IN THE RUN MUST BE LESS THAN THE LENGTH "L".
3. P_{MAX}= MAXIMUM TOTAL WEIGHT SUPPORTED BY ANY SINGLE TRAPEZE OR IN THE CASE OF A SINGLE HUNG UTILITY, MAXIMUM TOTAL WEIGHT SUPPORTED BY ANY SINGLE HANGER.
4. PROVISIONS ARE MADE TO ELIMINATE SEISMIC IMPACT FOR COMPONENTS VULNERABLE TO IMPACT.
5. FLEXIBLE CONNECTIONS, EXPANSION LOOPS, OR OTHER ASSEMBLIES ARE PROVIDED TO ACCOMMODATE THE RELATIVE DISPLACEMENT BETWEEN COMPONENT AND PIPING, WHERE THE PIPING SYSTEM IS POSITIVELY ATTACHED TO THE STRUCTURE.

DROP LENGTH EXCLUSIONS - PIPING

REGISTERED PROFESSIONAL ENGINEER
MARCIN WASAZNIK
S 6612
STRUCTURAL
STATE OF CALIFORNIA

ISAT
A Division of Tomarco Contractor Specialties

International Seismic Application Technology
14848 Northam Street, La Mirada, CA 90638
877-999-4728 (Toll Free) 714-523-0845 (fax)
www.isatsb.com

Rev. 0
08/15/23

Page
8.6b

2022 CBC HCAI SEISMIC BRACING NOTES

HVAC DUCT AND MECHANICAL COMPONENTS

1. In compliance with the 2022 CBC, seismic bracing is to be installed on all suspended HVAC duct runs and mechanical components per ISAT's engineered bracing tables, ISAT's installation details and the following criteria.

BRACING REQUIREMENTS FOR SUSPENDED HVAC DUCT		
Seismic Design Category	**I_P [a]**	**Service Bracing Requirements**
D, E, F	≥ 1.0	Brace All Duct Designed to Carry or Convey Toxic, Highly Toxic or Flammable Gases or used for Smoke Control
	≥ 1.0	Brace All Duct Having a Cross-Sectional Area[(b)] ≥ 6 ft^2 or Weighing > 20 Lbs/Lf

a. I_p = Component Importance Factor
b. Provisions Are Made to Avoid Damaging Impact

REVIEWED FOR CODE COMPLIANCE
HCAI
OPM-0403
BY: William Staehlin
DATE: 01-26-2024
CALIFORNIA BUILDING CODE, 2022

a. For Seismic Design Categories D, E or F, brace suspended components where component Ip > 1.0. Component importance factor, Ip, for design of supports and attachments shall be in accordance with the 2022 CBC Section 1617A.1.17 for HCAI 1 & 4 buildings. Component importance factor, Ip = 1.5, for HCAI 1R, 2 & 5 buildings shall be in accordance with 2022 CBC Section 1613.4.

2. Seismic design is not required for:
   a. Components weighing ≤ 20 lbs or distributed systems ≤ 5 lbs/lf (Ip ≥ 1.0, SDC D, E, F) that are positively attached to the structure and supports & attachments are detailed on the plans, except equipment with hazardous contents, attachments to be shown on construction documents irrespective of weight (2022 CBC, 1617A.1.18 ASCE 7, Section 13.1.4).
   b. Components weighing less than 400 lbs., with a center of mass located 4 ft or less above the adjacent floor or roof, the component is attached via flexible connections between itself and associated utilities (conduit, piping, etc.) and the component is positively attached to the floor or roof (2022 CBC, 1617A.1.18 ASCE 7, Section 13.1.4) except components requiring Special Seismic Certification in accordance with 2022 CBC Section 1705A.13.3.

HVAC DUCT AND MECHANICAL COMPONENTS (CONTINUED)

3. Components that are installed in-line with the duct system and have an operating weight greater than 75 lbs (334N), such as fans, heat exchangers and humidifiers, shall be supported and laterally braced independent of the duct system and such braces shall meet the force requirements of section 13.3.1. If the in-line device requires special seismic certification or has an OSP (HCAI Special Seismic Certification Preapproval per HCAI PIN 55), support & lateral brace shall be provided as specified in the certification or OSP document, regardless of the in-line duct device operating weight. (Exception: VAV/CAV boxes up to 75 lbs.)

4. Bracing for suspended components installed in-line with the duct system not designed to convey, support or otherwise contain toxic, highly toxic or explosive substances, flammable gasses or are used for smoke control is not required where the operating weight is less than or equal to 75 lbs.

   Note: If the in-line duct device requires special seismic certification or has an HCAI OSP, support and lateral bracing shall be provided as specified in the certification or OSP document, regardless of the in-line duct device operating weight. (Exception: VAV/CAV boxes up to 75 lbs.)

5. Components or equipment that are installed in-line with the duct system and have an operating weight less than or equal to 75 lbs. such as small terminal units, dampers, louvers, diffusers, and VAV/CAV/ATU boxes, etc. and are directly connected to the rigid ductwork on each end (no flexible connections) may be considered part of the duct run and do not require independent support and seismic bracing if the weight of the duct on each side of the component equals or exceeds the weight of the component; or if the duct is braced with the mass of the in-line component considered in the forces tributary to the adjacent braces. Unbraced piping attached to in-line components or equipment shall be provided with adequate flexibility (e.g. flexible connections or (3) 90 degree elbows) to accommodate the seismic relative displacements.

6. Per ASCE 7-16, Section 13.4.1, do not use an R_p factor greater than 6.0 when calculating F_p for design of the attachment.

7. Un-braced piping attached to in-line components or equipment shall be provided with adequate flexible connections to accommodate seismic relative displacements.

REVIEWED FOR CODE COMPLIANCE
HCAI
OPM-0403
BY: William Staehlin
DATE: 1-26-2024
CALIFORNIA BUILDING CODE

REGISTERED PROFESSIONAL ENGINEER
MARCIN WASAZNIK
S 6612
STRUCTURAL
STATE OF CALIFORNIA

ISAT
A Division of Tomarco Contractor Specialties

International Seismic Application Technology
14848 Northam Street, La Mirada, CA 90638
877-999-4728 (Toll Free) 714-523-0845 (fax)
www.isatsb.com

HVAC DUCT AND MECHANICAL COMPONENTS (CONTINUED)

8. Seismic restraints are not required for duct systems if the following conditions are met for the full length of the run:
   a. Duct system is positively attached to the structure.
   b. Flexible connections or other assemblies are provided to accommodate relative displacement between the duct system and associated components.
   c. Trapeze and single support components must meet the limitations in 2022 CBC, 1617A.1.25 ASCE 7, Section 13.6.6 -1.a & 1.b, respectively. Refer to page 9.6b.

9. Where bracing is allowed to be omitted:
   a. Flexible connections are required between any fixed juncture or component and the connecting HVAC duct.
   b. Provisions are to be made to avoid impact with other ducts or mechanical components or to protect the ducts in the event of impact, the distribution system is positively attached to the structure.

10. All trapeze assemblies supporting ducts shall be braced considering the total weight of the duct(s) and insulation on the trapeze. If the actual weight of the duct is unknown, refer to Duct Weight Charts, Section X.

11. All seismic bracing assemblies shall utilize ISAT supplied, proprietary seismic brackets unless noted otherwise. Any substitution shall be subject to ISAT review and HCAI approval.

12. Brace spacing shall not exceed the maximum allowable brace spacing as engineered by ISAT for this preapproval. Refer to individual ISAT bracing charts compiled by duct trapeze weight. See Index Page C0.1.

13. Every HVAC duct run which requires bracing shall have a minimum of two transverse braces and one longitudinal brace. For the purposes of this Manual, a run is defined as a suspended element of 10 foot minimum straight length.

14. A rigid transverse brace shall be installed on one side of a horizontal 90 degree change in duct direction.

15. A transverse brace may act as a longitudinal brace if it is located within two duct widths from the inside corner of a 90 degree change in direction, if the brace arm and anchor have been sized to meet or exceed the requirements of the longitudinal brace and the transverse brace is installed on the larger of the two ducts as shown on pages A2.0M and A2.1M or as engineered by ISAT technical support.

REVIEWED FOR CODE COMPLIANCE
HCAI
BY: William Staehlin
DATE: 01-26-2024
CALIFORNIA BUILDING CODE 2022

HVAC DUCT AND MECHANICAL COMPONENTS (CONTINUED)

16. A longitudinal brace may act as a transverse brace if it is located within two duct widths from the inside corner of a 90 degree change in direction, if the brace arm and anchor have been sized to meet or exceed the requirements of the transverse brace and the longitudinal brace is installed on the larger of the two ducts as shown on pages A2.0M and A2.1M or as engineered by ISAT technical support.

17. Tests, Special Inspections and Observations (TIO) shall be in accordance with HCAI approved TIO form for the project.

18. Flexible connections at walls are not allowed as Transverse Brace locations.

19. Where a duct passes through a wall may be considered a transverse brace location provided the duct is tightly constrained and it is a rigid connection. The ability of a breakaway smoke damper to act as a transverse brace location is to be evaluated on a case-by-case basis. The Engineer of Record or the Project Architect must verify the ability of the wall to accommodate the transverse seismic load.

20. Vertical support spacing for trapeze mounted duct is to be the lesser of 10 foot maximum, or the maximum as dictated by the California Mechanical Code.

21. Each layer of a multi-layer trapeze rack shall be braced individually based on the weight of the individual layer, or as specifically engineered by ISAT.

22. All vertical riser ducts shall include engineered lateral restraint and vertical supports at the top and bottom of the riser and at each intermediate floor not to exceed a maximum interval from the C-series Bracing Tables. The lateral seismic restraint and the vertical support shall be engineered on an individual project basis.

23. Vertical risers which are mechanically attached to floors at the point of penetration are considered a transverse and longitudinal brace location when the supports and attachments are sized to accommodate the lateral load.

24. For rigid brace arm assembly, solid, punched or short slot minimum 12 gauge steel channel (pg H2) or EMT sizes per page E0.1 shall be used. Brace arm design values shown on Page E1.1 , E1.2, and E1.3.

REVIEWED FOR CODE COMPLIANCE
HCAI
BY: William Staehlin
DATE: 01-26-2024
CALIFORNIA BUILDING CODE 2022

REGISTERED PROFESSIONAL ENGINEER
MARCIN WASAZNIK
S 6612
STRUCTURAL
STATE OF CALIFORNIA

ISAT
A Division of Tomarco Contractor Specialties

International Seismic Application Technology
14848 Northam Street, La Mirada, CA 90638
877-999-4728 (Toll Free) 714-523-0845 (fax)
www.isatsb.com

2022 CBC HCAI SEISMIC BRACING NOTES

VIBRATION ISOLATED HVAC DUCT AND MECHANICAL COMPONENTS

1. ISAT includes designs for the seismic restraint of vibration isolated piping suspended from spring hangers. However, design of the vibration isolated support system itself must be accomplished separately on a job specific basis by a qualified engineer. Hanger design shall satisfy overstrength factor (Ω_0) in accordance with ASCE7, as amended in 2022 CBC section 1617A.1.23 and springs must have HCAI approval for strength and stiffness.

2. Install vibration isolation hardware per manufacturer's instructions to achieve the required degree of isolation and/or deflection.

3. Vibration isolated hangers that also require seismic bracing shall be braced using galvanized steel cable with ISAT designed and tested seismic brackets.

4. Cable (reference pages E4.2, E4.3, E4.4, or E4.7) to be installed with sufficient slack to accommodate, but not exceed, the vibration isolators calculated deflection. See manufacturer's vibration isolator specifications. Do not tension cables to the extent that they support gravity loads. Cable installation is to be symmetrical.

5. Cable: 7x19 steel small diameter specialty cord per ASTM A1023/A1023M table 7.

REVIEWED FOR CODE COMPLIANCE
HCAI
OPM-0403
BY: William Staehlin
DATE: 01-26-2024
CALIFORNIA BUILDING CODE, 2022

REGISTERED PROFESSIONAL ENGINEER
MARCIN WASAZNIK
S-6612
STRUCTURAL
STATE OF CALIFORNIA

ISAT
A Division of Tomarco Contractor Specialties

International Seismic Application Technology
14848 Northam Street, La Mirada, CA 90638
877-999-4728 (Toll Free) 714-523-0845 (fax)
www.isatsb.com

2022 CBC HCAI SEISMIC BRACING NOTES

TRAPEZE ASSEMBLIES - NO BRACING REQUIREMENTS

ALL CRITERIA SHOWN MUST BE MET

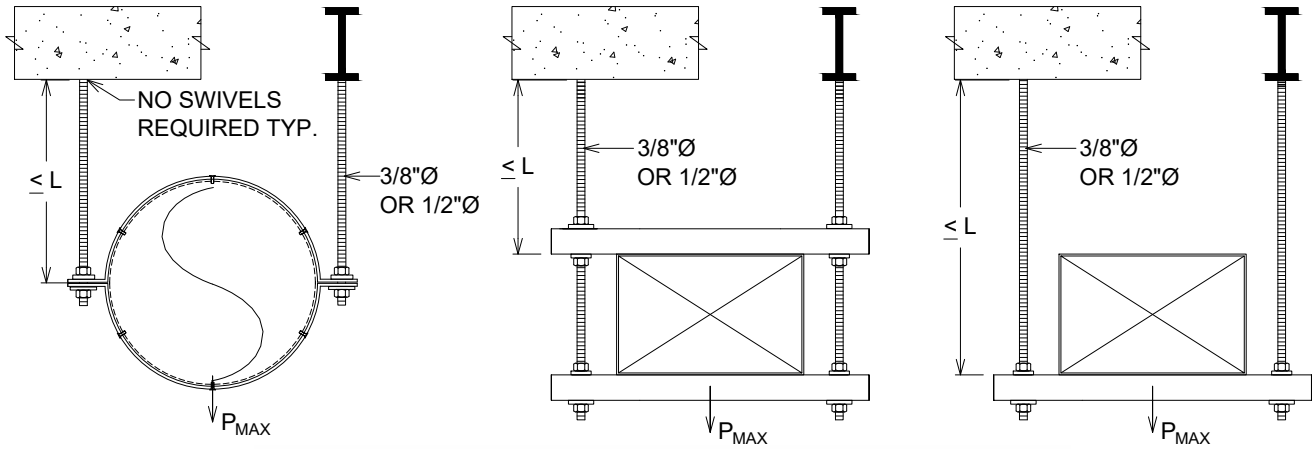

2022 CBC

L	P_{MAX} [1]
12"	100 lbs

1. P/MAX MUST BE LESS THAN 10 LB/FT

SINGLE ROD ASSEMBLY - NO BRACING REQUIREMENTS

ALL CRITERIA SHOWN MUST BE MET

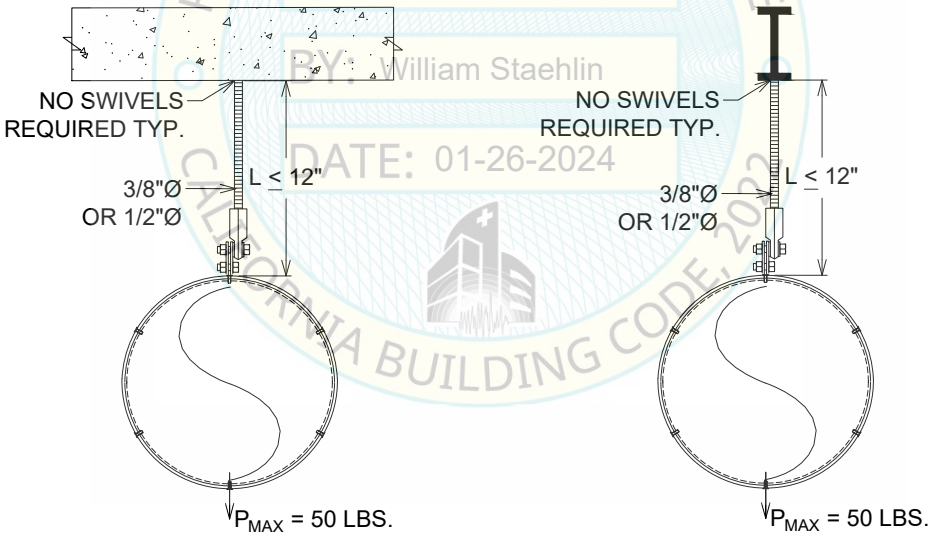

REVIEWED FOR CODE COMPLIANCE
HCAi
OPM-0403
BY: William Staehlin
DATE: 01-26-2024
CALIFORNIA BUILDING CODE 2022

GENERAL NOTES (APPLIES TO TRAPEZE AND SINGLE ROD HANGERS)

1. SUPPORT DUCT WORK WITH ALL THREAD RODS.
2. EACH HANGER LENGTH IN THE RUN MUST BE LESS THAN THE LENGTH "L".
3. P_{MAX}= MAXIMUM TOTAL WEIGHT SUPPORTED BY ANY SINGLE TRAPEZE OR IN THE CASE OF A SINGLE HUNG UTILITY, MAXIMUM TOTAL WEIGHT SUPPORTED BY ANY SINGLE HANGER.
4. PROVISIONS ARE MADE TO ELIMINATE SEISMIC IMPACT FOR COMPONENTS VULNERABLE TO IMPACT.

DROP LENGTH EXCLUSIONS - DUCT

REGISTERED PROFESSIONAL ENGINEER
MARCIN WASAZNIK
S 6612
STRUCTURAL
STATE OF CALIFORNIA

ISAT
A Division of Tomarco Contractor Specialties

International Seismic Application Technology
14848 Northam Street, La Mirada, CA 90638
877-999-4728 (Toll Free) 714-523-0845 (fax)
www.isatsb.com

Rev. 0
08/15/23

Page
9.6b

2022 CBC HCAI SEISMIC BRACING NOTES

SUSPENDED PLUMBING PIPING

1. In compliance with the 2022 CBC, seismic bracing is to be installed on all suspended pipe and equipment per ISAT's engineered bracing tables, ISAT's installation details and the following criteria:

BRACING REQUIREMENTS FOR PLUMBING PIPING SERVICES		
Seismic Design Category	**I_P [a]**	**Service Bracing Requirements**
Steel or Copper Piping Systems *(c)(d)(e)(f)(g)*		
D, E, F	1.0	Brace All Pipe > 3"
	>1.0	Brace All Pipe > 1" Exception: Pipes With Non-Hazardous Content With An Operating Weight ≤ 5 Lbs/Lf: - Sch. 40 Steel Vent Lines ≤ 2" Diameter - Full Sch. 40 Steel Lines ≤ 1-1/2" Diameter - Copper Vent Lines ≤ 3-1/2" Diameter - Full Copper Lines ≤ 2" Diameter
	≥1.0	Brace All Trapeze Assemblies Supporting Loads > 5 Lbs/Lf
EXCEPTIONS	All	Piping Systems Designed and Braced in Accordance with ASCE 7, Section 13.6.7.1
Cast Iron Piping Systems *(b)(c)(d)(f)(g)*		
D, E, F	All	Brace All Pipe with Non-Hazardous Content With An Operating Weight > 5 Lbs/Lf: - No-Hub Cast Iron Gravity Lines > 2" Diameter - No-Hub Cast Iron Vent Lines, Storm Drains & Overflow Drains > 3" Diameter

a. I_p = Component Importance Factor
b. Refer to Note 11 on page 10.3b
c. Provisions are made to avoid damaging impact
d. Use of flexible connectors required between unbraced piping and components
e. Applicable to pipe having an $R_p \geq 4.5$ in Table 13.6-1, ASCE 7-16
f. Hazardous: Including, but not limited to medical gases, fuel oil, natural gas, acid waste, methane, fire protection, fume hood exhaust, BSC exhaust, airborne infection isolation (AII) exhaust, ED decontamination exhaust, type I kitchen grease exhaust, steam and condensate piping, steam safety valves vents
g. Non-hazardous: Including, but not limited to, medical vacuum, compressed air, water, medical air

REVIEWED FOR CODE COMPLIANCE
OPM-0403
BY: William Staehlin
DATE: 01-26-2024
CALIFORNIA BUILDING CODE 2022

REGISTERED PROFESSIONAL ENGINEER MARCIN WASAZNIK S-6612 STRUCTURAL STATE OF CALIFORNIA

ISAT
A Division of Tomarco Contractor Specialties

International Seismic Application Technology
14848 Northam Street, La Mirada, CA 90638
877-999-4728 (Toll Free) 714-523-0845 (fax)
www.isatsb.com

SUSPENDED PLUMBING PIPING (CONTINUED)

a. For Seismic Design Categories D, E or F, brace suspended components where component Ip > 1.0. Component importance factor, Ip, for design of supports and attachments shall be in accordance with the 2022 CBC Section 1617A.1.17 for HCAI 1 & 4 buildings. Component importance factor, Ip = 1.5, for HCAI 1R, 2 & 5 buildings shall be in accordance with 2022 CBC Section 1613.4.

2. Seismic design is not required for:
   a. Components weighing ≤ 20 lbs or distributed systems ≤ 5 lbs/lf (Ip ≥ 1.0, SDC D, E, F) that are positively attached to the structure and supports & attachments are detailed on the plans, except equipment with hazardous contents, attachments to be shown on construction documents irrespective of weight (2022 CBC, 1617A.1.18 ASCE 7, Section 13.1.4).
   b. Components weighing less than 400 lbs., with a center of mass located 4 ft or less above the adjacent floor or roof, the component is attached via flexible connections between itself and associated utilities (conduit, piping, etc.) and the component is positively attached to the floor or roof (2022 CBC, 1617A.1.18 ASCE 7, Section 13.1.4) except components requiring Special Seismic Certification, in accordance with 2022 CBC Section 1705A.13.3.

3. For any situation in which seismic bracing is allowed to be omitted, flexible connections are to be provided between the components and piping. Provisions are to be made to avoid or protect the pipe from impact.

4. Per ASCE 7-16, Section 13.4.1, do not use an R_p factor greater than 6.0 when calculating F_p for design of the attachment.

5. Un-braced, suspended piping attached to components is to be installed with adequate flexibility to accommodate differential displacements. Flexible connections in piping required in 2022 CBC, 1617A.1.26 ASCE 7, Section 13.6.7.3 are not required where pipe is rigidly attached to the same floor (or wall, as applicable) that provides vertical and lateral support for the equipment, or to a fixture.

6. Flexible connections in piping are required at seismic separation joints and shall be detailed to accommodate the seismic relative displacements at connections.

7. Seismic restraints are not required for piping components if the following conditions are met for the full length of the run:
   a. Piping system is positively attached to the structure.
   b. Flexible connections, expansion loops, or other assemblies are provided to accommodate the relative displacement between component and piping.
   c. Trapeze and single support components meet or exceed any one of the limitations in 2022 CBC, 1617A.1.26 ASCE 7, Section 13.6.7.3 -1 through 2.b. Refer to page 10.6b.

REVIEWED FOR CODE COMPLIANCE
OPM-0403
BY: William Staehlin
DATE: 01-26-2024
CALIFORNIA HOSPITAL BUILDING CODE 2022

REGISTERED PROFESSIONAL ENGINEER
MARCIN WASAZNIK
S 6612
STRUCTURAL
STATE OF CALIFORNIA

ISAT
A Division of Tomarco Contractor Specialties

International Seismic Application Technology
14848 Northam Street, La Mirada, CA 90638
877-999-4728 (Toll Free) 714-523-0845 (fax)
www.isatsb.com

SUSPENDED PLUMBING PIPING (CONTINUED)

8. For the purpose of calculating weight, pipe weights are to be the operating weights, include weight of pipe insulation. If actual pipe weight is unknown, refer to pipe weight charts in Section X.

9. Tests, Special Inspections and Observations (TIO) shall be in accordance with HCAI approved TIO form for the project.

10. Brace spacing shall not exceed the maximum allowable brace spacing as engineered by ISAT. Refer to individual ISAT bracing charts compiled by pipe size or trapeze weight. See Index Page C0.1.

11. When calculating seismic design force for pipes constructed of low deformability materials such as cast iron, the value $R_p = 3.0$ (e.g. cast iron piping with non-flexible connections) is to be utilized. For drain, waste and vent piping, the value $R_p = 2.5$ (e.g. cast iron piping with flexible connections) is to be utilized.

12. All seismic bracing assemblies shall utilize ISAT supplied, proprietary seismic brackets unless noted otherwise. Any substitution shall be subject to ISAT review and HCAI approval.

13. Every pipe run which requires bracing shall have a minimum of two transverse braces and one longitudinal brace. For the purposes of this Manual, a "run" is defined as suspended piping of 10 foot minimum straight length.

14. Rigid grooved coupling listed for UL Standard 213 shall be permitted in horizontal run of pipe. Flexible grooved coupling listed for UL Standard 213 shall be permitted in vertical risers (to accommodate drift) and other locations (e.g. seismic separation, equipment nozzle, etc.) to accommodate small movement and/or rotation. Non-UL listed groove couplings shall not be used unless approved on project specific basis. Cast-iron (no-hub) pipe brace couplings shall be manufactured in accordance with ASTM C1540, shall be certified in accordance with FM 1680 Class 1 and gravity hangers shall be spaced per the requirements of Table 313.3 of the 2022 California Plumbing Code (CPC 2022) for no-hub cast iron pipe.

    Exception: cast iron (no-hub) pipe joined by couplings not satisfying ASTM C1540 or not certified in accordance w/ FM 1680 class 1 shall be designed on a project specific basis & shall require project specific HCAI approval.

15. A longitudinal brace at a 90 degree change in direction may act as a transverse brace if it is within 2 feet of the change in direction or located within prescribed distances from the change in direction as shown on pages A1.0P and A2.0P. The brace arm and anchorage must be sized to meet or exceed the requirements of the total brace reaction. A brace arm for a smaller distributed utility is not to be utilized as transverse or longitudinal brace for an adjoining run of a larger distributed utility.

REVIEWED FOR CODE COMPLIANCE
HCAi
OPM-0403
BY: William Staehlin
DATE: 01-26-2024
OFFICE OF PLANNING AND RESEARCH

REGISTERED PROFESSIONAL ENGINEER
MARCIN WASAZNIK
S 6612
STRUCTURAL
STATE OF CALIFORNIA

ISAT
A Division of Tomarco Contractor Specialties

International Seismic Application Technology
14848 Northam Street, La Mirada, CA 90638
877-999-4728 (Toll Free) 714-523-0845 (fax)
www.isatsb.com

SUSPENDED PLUMBING PIPING (CONTINUED)

16. A transverse brace at a 90 degree change in direction may act as a longitudinal brace if it is within 2 feet of the change in direction or located within prescribed distances from the change in direction as shown on pages A1.0P and A2.0P. The brace arm and anchorage must be sized to meet or exceed the requirements of the total brace reaction. A brace arm for a smaller distributed utility is not to be utilized as transverse or longitudinal brace for an adjoining run of a larger distributed utility.

17. A transverse brace for a smaller pipe is not to be utilized as the longitudinal brace for an adjoining run of larger pipe. A longitudinal brace for a smaller pipe is not to be utilized as the transverse brace for an adjoining run of larger pipe except when specifically engineered by ISAT technical support.

18. Except where transverse braces are acting as a longitudinal brace at a change in direction, all longitudinal brace locations, for individually supported pipe, shall employ an ISAT Longitudinal Restraint Device (LRD) as illustrated on F7 series pages and installed per the individual detail drawings within section B of the manual.

19. Standard supports in accordance with ASME B31, NFPA 13-22 or MSS SP-58 designed by tested load rating or analysis considering all loads are acceptable. In addition, the stiffness of the support, where appropriate, shall be designed such that the seismic load path for the component performs its intended function. There shall be a vertical support within 12'' of all seismic braces to ensure a seismic load path.

20. Vertical support spacing for trapeze mounted pipe runs is to be the lesser of 10 foot maximum or the maximum as dictated by the CPC 2022 or CMC 2022.

21. Each layer of a multi-layer trapeze rack shall be braced individually based on the weight of the individual layer, or as specifically engineered by ISAT.

22. This OPM is limited to seismic bracing of interior pipes only. It does not address other loads such as, but not limited to, those generated by thermal growth, pressure, fluid dynamics, pipe rupture, or movement of equipment to which brace components are attached. It does not address components that cross seismic separation of buildings. Nor does it address components (other than pipe risers) attached to portions of the structure or equipment that will experience relative seismic displacement. Project specific design and HCAI approval shall be required for design not covered by the OPM.

23. For rigid brace arm assembly, solid, punched or short slot minimum 12 gauge steel channel (pg H2) or EMT sizes per page E0.1 shall be used. Brace arm design values shown on Page E1.1 , E1.2, and E1.3.

REVIEWED FOR CODE COMPLIANCE
HCAI
OPM-0403
By: William Staehlin
DATE: 01-26-2024
CALIFORNIA BUILDING CODE 2022

SUSPENDED PLUMBING PIPING (CONTINUED)

24. Vertical pipe systems supported at each floor shall be considered seismically braced if the pipe has a riser clamp or bracket appropriately designed for seismic and vertical loads or if the penetration through each floor is tightly packed with approved insulation or firestops, satisfying NFPA 13-22 Section 9.3.5.8.5 and floor to floor spacing does not exceed maximum spacing tabulated in the C-series Bracing tables. Tops of risers exceeding 3 ft. shall be provided with a four-way brace. Where this bracing is attached to the horizontal piping, it shall be installed within 2 ft. of the riser.

25. Re-insulate any locations where pipe insulation had been originally removed for direct attachment of Longitudinal Restraint Devices (LRD) to single hung pipe.

26. When using back-to-back 12 gauge steel channel as a trapeze assembly, pipe may be mounted to both the top and the underside provided the limitations of Page G2 and G3 are not exceeded.

VIBRATION ISOLATED PIPING

1. ISAT includes designs for the seismic restraint of vibration isolated piping suspended from spring hangers. However, design of the vibration isolated support system itself must be accomplished separately on a job specific basis by a qualified engineer. Hanger design shall satisfy overstrength factor (Ω_0) in accordance with ASCE7, as amended in 2022 CBC section 1617A.1.23 and springs must have HCAI approval for strength and stiffness.

2. Install vibration isolation hardware per manufacturer's instructions to achieve the required degree of isolation and/or deflection.

3. Vibration isolated hangers that also require seismic bracing shall be braced using galvanized steel cable with ISAT designed and tested seismic brackets.

4. Cable (reference pages E4.2, E4.3, E4.4, or E4.7) to be installed with sufficient slack to accommodate, but not exceed, the vibration isolators calculated deflection. See manufacturer's vibration isolator specifications. Do not tension cables to the extent that they support gravity loads. Cable installation is to be symmetrical.

5. Cable: 7x19 steel small diameter specialty cord per ASTM A1023/A1023M table 7.

REVIEWED FOR CODE COMPLIANCE
HCAi
OPM-0403
REVIEWED BY: William Staehlin
DATE: 01-26-2024
CALIFORNIA BUILDING CODE, 2022

REGISTERED PROFESSIONAL ENGINEER
MARCIN WASAZNIK
S-6612
STRUCTURAL
STATE OF CALIFORNIA

ISAT
A Division of Tomarco Contractor Specialties

International Seismic Application Technology
14848 Northam Street, La Mirada, CA 90638
877-999-4728 (Toll Free) 714-523-0845 (fax)
www.isatsb.com

2022 CBC HCAI SEISMIC BRACING NOTES

TRAPEZE ASSEMBLY - NO BRACING REQUIREMENTS

ALL CRITERIA SHOWN MUST BE MET

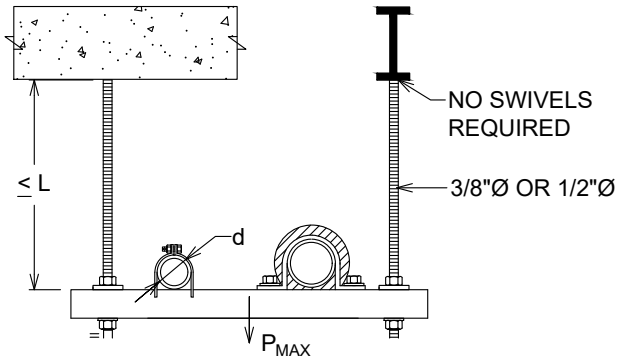

2022 CBC

I_p	SDC	d	L	P_{MAX}
1.0	D, E, F	≤ 3"	12"	100 lbs
1.5	D, E, F	≤ 2"	12"	100 lbs

SINGLE HUNG ASSEMBLY - NO BRACING REQUIREMENTS

ALL CRITERIA SHOWN MUST BE MET

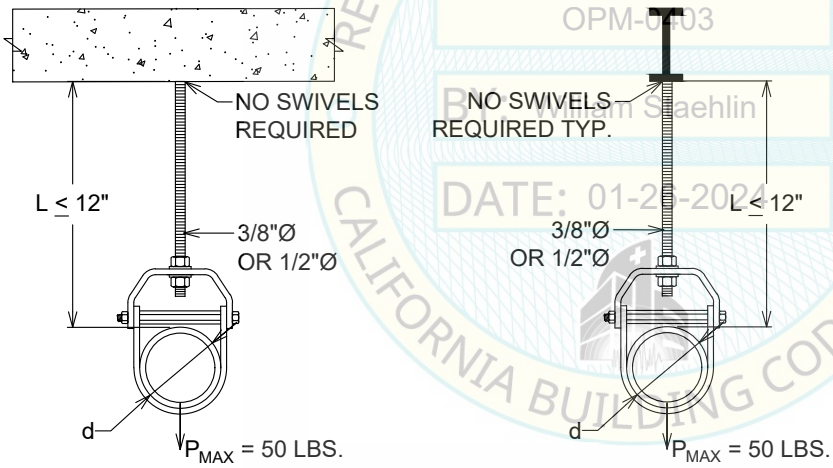

2022 CBC

		I_p	SDC	d
$R_p \geq 4.5$	SINGLE HUNG	1.0	D, E, F	≤ 3"
		1.5	D, E, F	≤ 1"

REVIEWED FOR CODE COMPLIANCE
OPM-0403
Reviewed by William Staehlin
DATE: 01-26-2024
CALIFORNIA BUILDING CODE, 2022

GENERAL NOTES (APPLIES TO TRAPEZE AND SINGLE ROD HANGERS)

1. SUPPORT PIPING WITH ALL THREAD RODS.
2. EACH HANGER LENGTH IN THE RUN MUST BE LESS THAN THE LENGTH "L".
3. P_{MAX}= MAXIMUM TOTAL WEIGHT SUPPORTED BY ANY SINGLE TRAPEZE OR IN THE CASE OF A SINGLE HUNG UTILITY, MAXIMUM TOTAL WEIGHT SUPPORTED BY ANY SINGLE HANGER.
4. PROVISIONS ARE MADE TO ELIMINATE SEISMIC IMPACT FOR COMPONENTS VULNERABLE TO IMPACT.
5. FLEXIBLE CONNECTIONS, EXPANSION LOOPS, OR OTHER ASSEMBLIES ARE PROVIDED TO ACCOMMODATE THE RELATIVE DISPLACEMENT BETWEEN COMPONENT AND PIPING, WHERE THE PIPING SYSTEM IS POSITIVELY ATTACHED TO THE STRUCTURE.

DROP LENGTH EXCLUSIONS - PIPING

REGISTERED PROFESSIONAL ENGINEER
MARCIN WASAZNIK
S 6612
STRUCTURAL
STATE OF CALIFORNIA

ISAT
A Division of Tomarco Contractor Specialties

International Seismic Application Technology
14848 Northam Street, La Mirada, CA 90638
877-999-4728 (Toll Free) 714-523-0845 (fax)
www.isatsb.com

Rev. 0
08/15/23

Page
10.6b

INDEX - GENERAL LAYOUTS GUIDELINES, OFFSETS & SETBACKS

PAGE	*DESCRIPTION*
	CONDUIT
A1.0E - A1.3E	SINGLE HUNG CONDUIT
A2.0E - A2.1E	TRAPEZE MOUNTED ELECTRICAL RACEWAYS
A3.0E	MAXIMUM OFFSET DIMENSION, CONDUIT
A3.1E	MAXIMUM SETBACK DIMENSION, CONDUIT
	PIPING AND MECHANICAL
A1.0P - A1.3P	SINGLE HUNG PIPE
A2.0P - A2.1P	TRAPEZE MOUNTED PIPE
A2.0M - A2.1M	HVAC DUCT
	STEEL AND IRON PIPE
A3.0P	MAXIMUM OFFSET DIMENSION, STEEL PIPE
A4.0P	MAXIMUM SETBACK DIMENSION, STEEL PIPE
A4.1P	MAXIMUM SETBACK DIMENSION, NO-HUB CAST IRON PIPE
	COPPER TUBING
A5.0	MAXIMUM OFFSET DIMENSION, COPPER TUBING
A5.1	MAXIMUM SETBACK DIMENSION, COPPER TUBING
	SEISMIC BRACING EXCLUSIONS
A6.0	DROP LENGTH EXCLUSIONS, TRANSVERSE SECTION
A6.1	DROP LENGTH EXCLUSIONS, LONGITUDINAL SECTION

REVIEWED FOR CODE COMPLIANCE
OPM-0403
BY: William Staehlin
DATE: 01/26/2024
CALIFORNIA BUILDING CODE, 2022

REGISTERED PROFESSIONAL ENGINEER
MARCIN WASAZNIK
S-6612
STRUCTURAL
STATE OF CALIFORNIA

ISAT
A Division of Tomarco Contractor Specialties

International Seismic Application Technology
14848 Northam Street, La Mirada, CA 90638
877-999-4728 (Toll Free) 714-523-0845 (fax)
www.isatsb.com

Rev. 0
12/28/18

Page
A0.1

GENERAL LAYOUT GUIDELINES

SINGLE HUNG CONDUIT

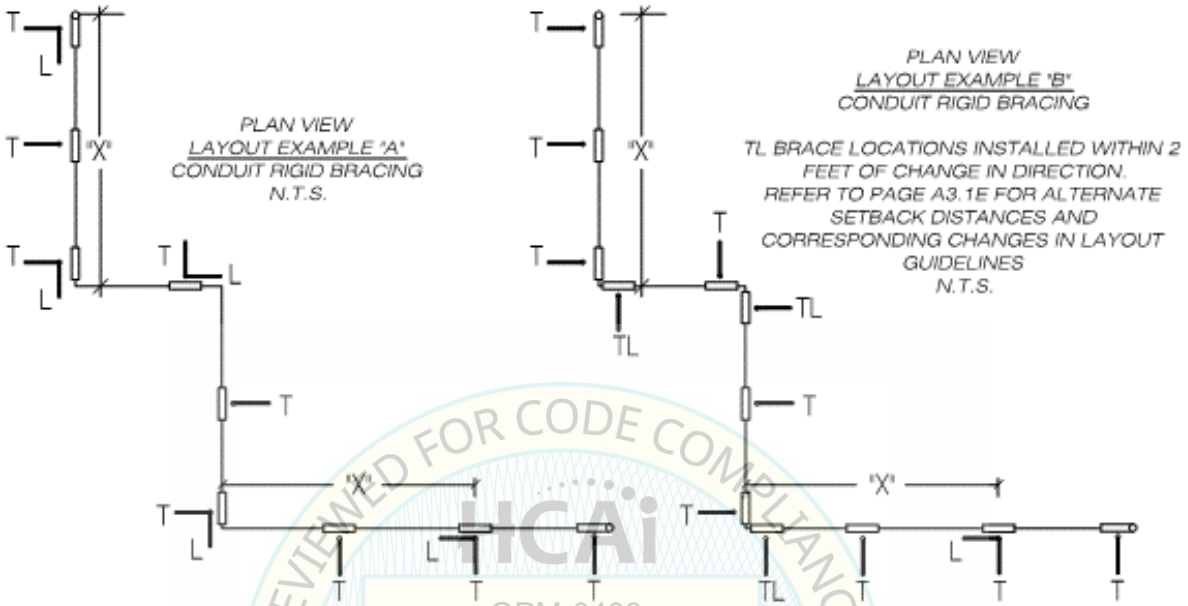

"X" < MAX. ALLOWED LONGITUDINAL BRACE SPACING PER C-SERIES BRACING TABLES

T = TRANSVERSE L = LONGITUDINAL

TL = BRACE ARM ASSEMBLY AND DECK ANCHORAGE SAME AS LONGITUDINAL BRACE.

REVIEWED FOR CODE COMPLIANCE
HCAi
OPM-0403
BY: William Staehlin
DATE: 01-26-2024
CALIFORNIA BUILDING CODE, 2022

1. From the Engineered Bracing Table, C-Series pages, for a specific size of conduit determine the allowable Maximum Transverse and Longitudinal Brace Spacing.

2. As you begin laying out bracing, every pipe run which requires bracing shall have a minimum of two Transverse Braces and one Longitudinal Brace. For the purposes of this manual, a “run” or an “offset” is defined as suspended pipe of 10 foot minimum straight length.

3. Beginning at one end of a straight run install a Transverse brace at the beginning and at the end of the run.

4. From the first hanger, proceed a distance equal to the Maximum Transverse Brace Spacing. Install Transverse Bracing at the nearest hanger not exceeding this distance. Continue from this hanger location repeating the procedure until the Transverse brace at the end of the run is arrived at.

GENERAL LAYOUT GUIDELINES

SINGLE HUNG CONDUIT (CONTINUED)

5. Determine the maximum allowable Longitudinal Brace spacing from the Engineered Bracing Table. Layouts “A” and “B” above for ductile conduit provide two examples of rational Longitudinal brace placement. Longitudinal Bracing is typically installed at twice the spacing of Transverse Bracing.

   As shown the number of hanger locations requiring bracing may be minimized by the judicious placement of bracing at changes in run direction. If a Transverse Brace is installed within 2 feet of a change in run direction or as shown on page A4.1, it may also serve as the Longitudinal Brace for the next portion of the run provided that the brace arm, brace attachments and the deck anchorage have been sized to meet the requirements of the Longitudinal Brace.

   Similarly, a Longitudinal Brace at a 90 degree change in direction may act as a Transverse Brace if it is located within 2 feet of the change in direction or spaced as shown on Page A4.1.

6. Refer to Pages A3.0E thru A3.1E for additional offset and setback allowances.

7. Diagonal brace component must be within 12” of a vertical brace component assembly; vertical assembly may require restraints if assembled with a threaded rod.

REVIEWED FOR CODE COMPLIANCE
HCAi
OPM-0403
BY: William Staehlin
DATE: 01-26-2024
CALIFORNIA BUILDING CODE, 2022

REGISTERED PROFESSIONAL ENGINEER
MARCIN WASAZNIK
S-6612
STRUCTURAL
STATE OF CALIFORNIA

ISAT
A Division of Tomarco Contractor Specialties
International Seismic Application Technology
14848 Northam Street, La Mirada, CA 90638
877-999-4728 (Toll Free) 714-523-0845 (fax)
www.isatsb.com

GENERAL LAYOUT GUIDELINES

SINGLE HUNG CONDUIT (CONTINUED)

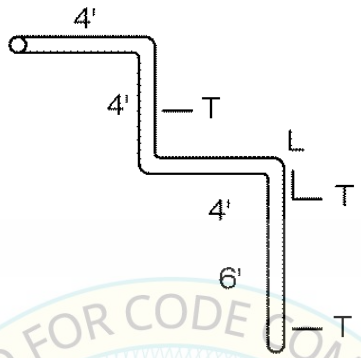

PLAN VIEW (N.T.S.)

BRACING LAYOUT GENERAL EXAMPLE
SHORT OFFSETS NOT EXCEEDING 10 FOOT CUMULATIVE LENGTH
T - TRANSVERSE BRACE ARM ASSEMBLY AND DECK ANCHORAGE
L - LONGITUDINAL BRACE ARM ASSEMBLY AND DECK ANCHORAGE

REVIEWED FOR CODE COMPLIANCE
HCAI
OPM-0403
BY: William Staehlin
DATE: 01-26-2024
CALIFORNIA BUILDING CODE, 2022

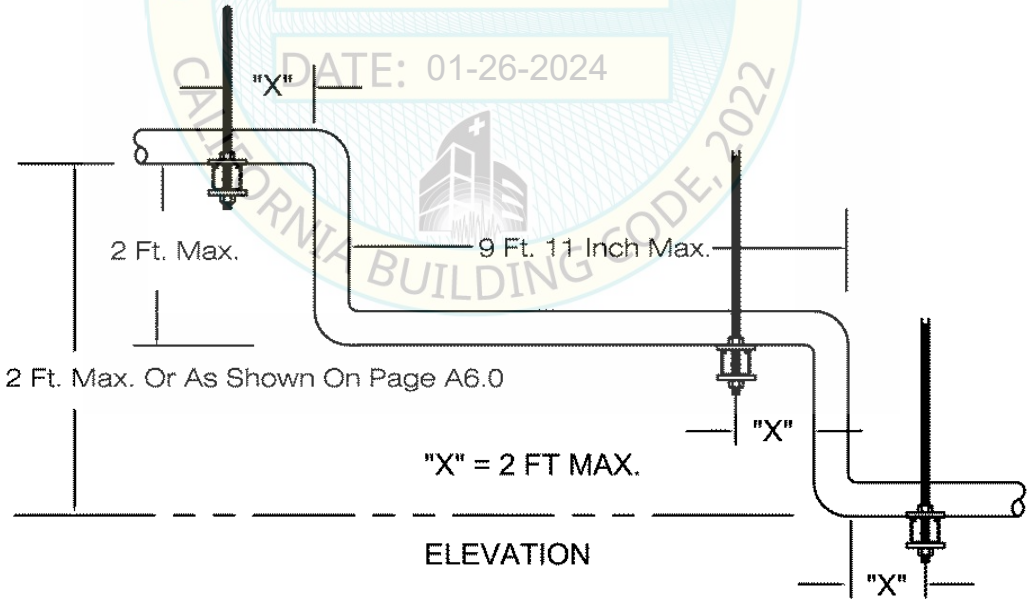

FOR SEISMIC RESTRAINT PURPOSES
WHERE CUMULATIVE VERTICAL RISE ≤ 2 FT OVER A HORIZONTAL SPAN NO GREATER THAN 9 FT. 11 IN., TREAT AS A CONTINUOUS RUN.

REGISTERED PROFESSIONAL ENGINEER
MARCIN WASAZNIK
S-6612
STRUCTURAL
STATE OF CALIFORNIA

ISAT
A Division of Tomarco Contractor Specialties

International Seismic Application Technology
14848 Northam Street, La Mirada, CA 90638
877-999-4728 (Toll Free) 714-523-0845 (fax)
www.isatsb.com

GENERAL LAYOUT GUIDELINES

SINGLE HUNG CONDUIT (CONTINUED)

8. Where conduit runs drop vertically to floor mounted equipment, install a transverse brace on the last hanger before the drop. Last hanger (X1) must be within 2 feet of the drop for conduit up to 3" diameter or within 5 feet of the drop for larger conduit sizes. If the final length of conduit run (X2) leading up to connection to the equipment after the vertical drop exceeds 10 feet and the conduit is elevated 6 feet or less above the floor, install a transverse brace from the conduit to the floor. If the conduit is more than 6 feet above the floor, brace to the overhead structure. To minimize point of connection stress, conduit connections to equipment are to include a swing joint, flexible connector or loop.

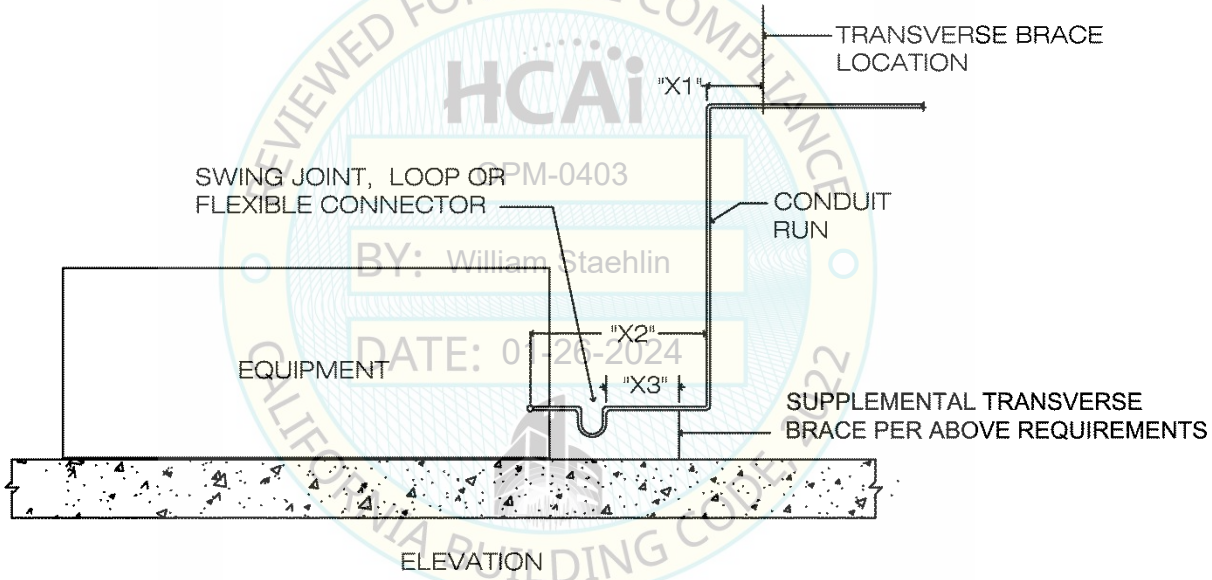

REVIEWED FOR CODE COMPLIANCE
HCAi
OPM-0403
BY: William Staehlin
DATE: 01-26-2024
CALIFORNIA BUILDING CODE 2022

GENERAL LAYOUT GUIDELINES

TRAPEZE MOUNTED ELECTRICAL RACEWAYS

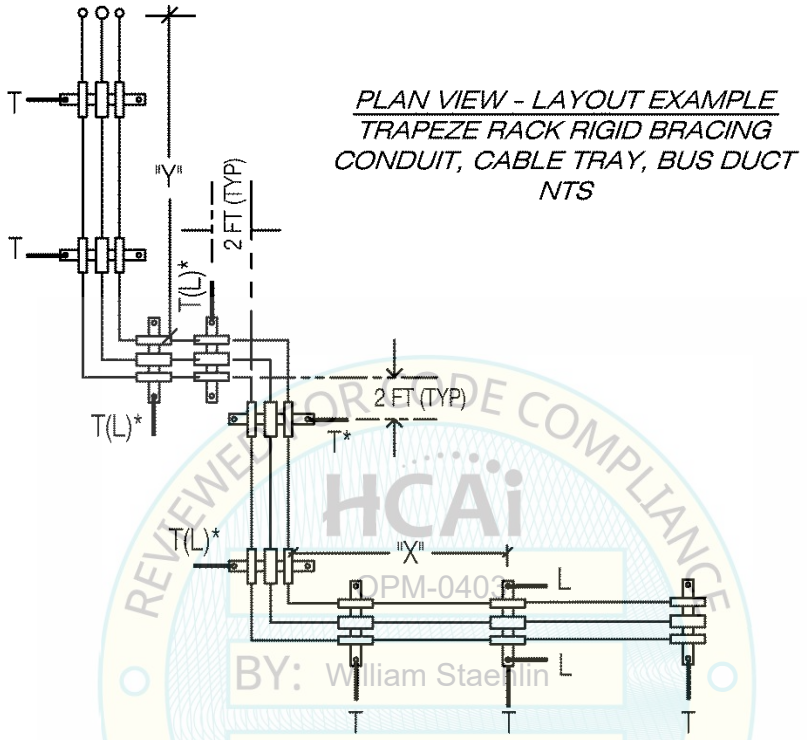

"X" AND "Y" ≤ MAX. ALLOWED LONGITUDINAL BRACE SPACING

T(L) - BRACE ARM ASSEMBLY AND DECK ANCHORAGE SAME AS LONGITUDINAL BRACE. SUITABLE WHERE CONNECTION WITHIN 2 FEET OF CHANGE IN DIRECTION.*

REVIEWED FOR CODE COMPLIANCE
HCAi
OPM-0403
BY: William Staehlin
DATE: 01/26/2024
CALIFORNIA BUILDING CODE 2022

1. From the Engineered Bracing Table, C-Series pages, for the correct weight range of trapeze rack determine the Maximum Transverse and the Maximum Longitudinal Brace Spacing.

2. As you begin laying out bracing, every trapeze run which requires bracing shall have a minimum of two Transverse Braces and one Longitudinal Brace. For the purposes of this manual, a "run" or an "offset" is defined as suspended trapeze of 10 foot minimum straight length.

REGISTERED PROFESSIONAL ENGINEER
MARCIN WASAZNIK
S-6612
STRUCTURAL
STATE OF CALIFORNIA

ISAT
A Division of Tomarco Contractor Specialties
International Seismic Application Technology
14848 Northam Street, La Mirada, CA 90638
877-999-4728 (Toll Free) 714-523-0845 (fax)
www.isatsb.com

GENERAL LAYOUT GUIDELINES

TRAPEZE MOUNTED ELECTRICAL RACEWAYS (CONTINUED)

3. Begin at one end of the run and determine the length of the initial straight run. If the initial run is less than the required Transverse Brace spacing, install Transverse Bracing at the first and last hanger location. If the Transverse Brace on the last hanger is to also act as a Longitudinal Brace for the next run, ensure that the installed brace arm and anchorage meet the Engineered Bracing Table requirements for the Longitudinal Brace.

   If the initial straight run is greater than the Maximum Transverse Brace spacing but less than the Maximum Longitudinal Brace Spacing, the initial Transverse Brace may be installed beyond the start of the run at a maximum distance of 1/2 the allowed Transverse Brace spacing.

4. After installing the initial Transverse Brace, proceed along the run a distance equal to the Maximum Transverse Brace Spacing. Install Transverse and Longitudinal bracing at the nearest hanger not exceeding this distance.

5. Repeat this procedure to completion of the entire run.

6. The ultimate number of installed brace arms may be minimized by the judicious placement of bracing at changes in run direction. If a Transverse Brace is installed within 2 feet of a 90 degree change in run direction, it may also serve as the Longitudinal Brace for the next portion of the run provided that the brace arm and the deck anchorage have been sized to meet the requirements of the Longitudinal Brace.

7. Similarly, a Longitudinal Brace at a 90 degree change in direction may act as a Transverse Brace if it is located within 2 feet of the change in direction.

REVIEWED FOR CODE COMPLIANCE
HCAI
OPM-0403
BY: William Staehlin
DATE: 01-26-2024
CALIFORNIA BUILDING CODE, 2022

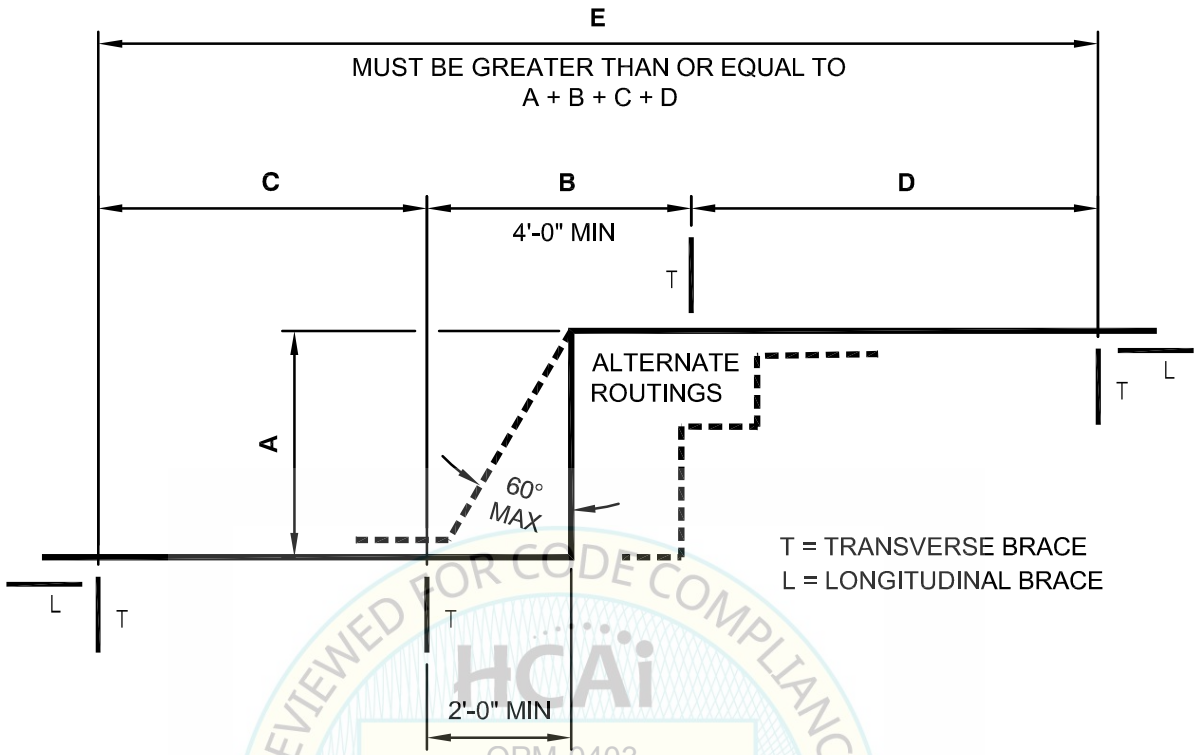

MAXIMUM OFFSET DIMENSION CONDUIT (RMC)	
A	1/2 OF MAX TRANSVERSE BRACE SPACING FROM C-SERIES BRACING TABLES.
B	1/2 OF MAX TRANSVERSE BRACE SPACING FROM C-SERIES BRACING TABLES.
C & D	MAX TRANSVERSE BRACE SPACING FROM C-SERIES BRACING TABLES.
E	MAX LONGITUDINAL BRACE SPACING FROM C-SERIES BRACING TABLES.

NOTES:
1. REFER TO C-SERIES BRACING TABLES FOR LONGITUDINAL AND TRANSVERSE BRACE SPACING AND BRACE LOADS.

REVIEWED FOR CODE COMPLIANCE
HCAi
OPM-0403
BY: William Staehlin
DATE: 01-26-2024
CALIFORNIA BUILDING CODE

MAXIMUM OFFSET DIMENSION - CONDUIT (RMC)

REGISTERED PROFESSIONAL ENGINEER
MARCIN WASAZNIK
S 6612
STRUCTURAL
STATE OF CALIFORNIA

ISAT
A Division of Tomarco Contractor Specialties

International Seismic Application Technology
14848 Northam Street, La Mirada, CA 90638
877-999-4728 (Toll Free) 714-523-0845 (fax)
www.isatsb.com

Rev. 3
12/11/19

Page
A3.0E

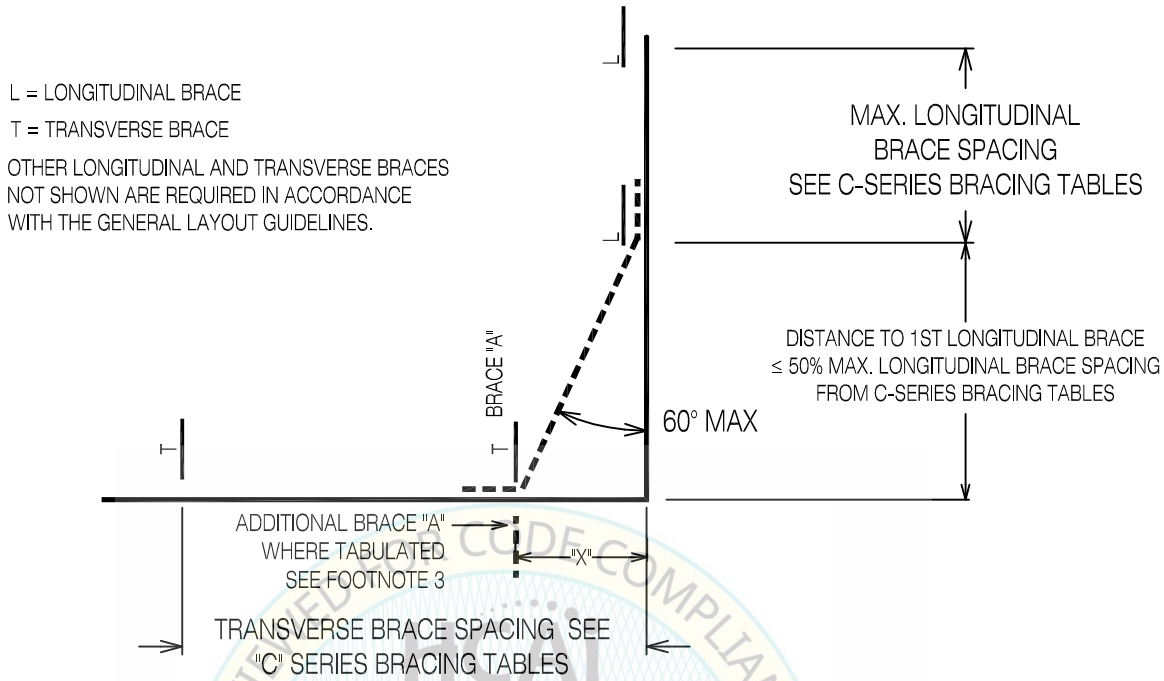

REVIEWED FOR CODE COMPLIANCE BY: William Staehlin DATE: 01-26-2024 OPM-0403 CALIFORNIA BUILDING CODE, 2019

MAXIMUM SET BACK DIMENSION, "X"				
	RMC MAXIMUM SET BACK DIMENSION			
Trade Size Inch	0.25 G's Maximum Allowable Set Back Ft	0.50 G's Maximum Allowable Set Back Ft	0.75 G's Maximum Allowable Set Back Ft	1.00 G'S Maximum Allowable Set Back Ft
3	10	8	6	6
3 1/2	10	10	8	6
4	10	10	8	6
5	10	10	10	8
6	10	10	10	10 [3]

1. BRACE "A" HAS THE SAME BRACE REACTION AND ANCHORAGE REQUIREMENTS AS A LONGITUDINAL BRACE AS DEFINED IN THE C-SERIES BRACING TABLES.
2. FOR 6" RMC AT 1.0G, PROVIDE AN ADDITIONAL TRANSVERSE BRACE (RIGID BRACE OR PAIR OF CABLE BRACES) WITH THE SAME MINIMUM BRACE ASSEMBLY AND ANCHORAGE AS TABULATED IN THE C-SERIES TABLES FOR THE G-FORCE AND TRADE SIZE.

MAXIMUM SETBACK DIMENSION - CONDUIT (RMC)

REGISTERED PROFESSIONAL ENGINEER MARCIN WASAZNIK S-6612 STRUCTURAL STATE OF CALIFORNIA

ISAT
A Division of Tomarco Contractor Specialties

International Seismic Application Technology
14848 Northam Street, La Mirada, CA 90638
877-999-4728 (Toll Free) 714-523-0845 (fax)
www.isatsb.com

Rev. 3
12/12/19

Page
A3.1E

GENERAL LAYOUT GUIDELINES

SINGLE HUNG PIPE

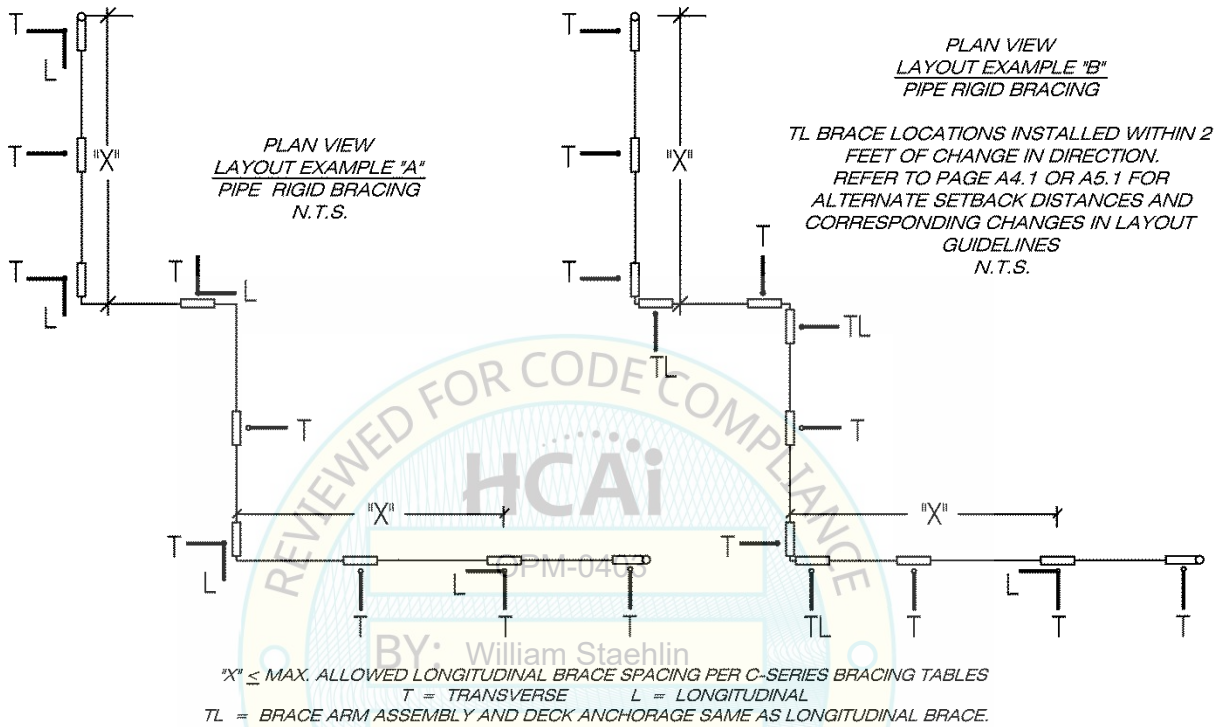

REVIEWED FOR CODE COMPLIANCE
HCAi
OPM-0403
BY: William Staehlin
DATE: 01-26-2024
CALIFORNIA BUILDING CODE 2022

1. From the Engineered Bracing Table, C-Series pages, for a specific size of pipe determine the allowable Maximum Transverse and Longitudinal Brace Spacing.

2. As you begin laying out bracing, every pipe run which requires bracing shall have a minimum of two Transverse Braces and one Longitudinal Brace. For the purposes of this manual, a “run” or an “offset” is defined as suspended pipe of 10 foot minimum straight length.

3. Beginning at one end of a straight run install a Transverse brace at the beginning and at the end of the run.

4. From the first hanger, proceed a distance equal to the Maximum Transverse Brace Spacing. Install Transverse Bracing at the nearest hanger not exceeding this distance. Continue from this hanger location repeating the procedure until the Transverse brace at the end of the run is arrived at.

GENERAL LAYOUT GUIDELINES

SINGLE HUNG PIPE (CONTINUED)

5. Determine the maximum allowable Longitudinal Brace spacing from the Engineered Bracing Table. Layouts “A” and “B” above, for ductile pipe, provide two examples of rational Longitudinal brace placement. Longitudinal Bracing is typically installed at twice the spacing of Transverse Bracing.

   As shown the number of hanger locations requiring bracing may be minimized by the judicious placement of bracing at changes in run direction. If a Transverse Brace is installed within 2 feet of a change in run direction or as shown on page A4.1, it may also serve as the Longitudinal Brace for the next portion of the run provided that the brace arm, brace attachments and the deck anchorage have been sized to meet the requirements of the Longitudinal Brace.

   Similarly, a Longitudinal Brace at a 90 degree change in direction may act as a Transverse Brace if it is located within 2 feet of the change in direction or spaced as shown on Page A4.1.

6. Rigid grooved coupling listed for UL Standard 213 shall be permitted in horizontal run of pipe. Flexible grooved coupling listed for UL Standard 213 shall be permitted in vertical risers (to accommodate drift) and other locations (e.g. seismic separation, equipment nozzle, etc.) to accommodate small movement and/or rotation. Non-UL listed groove couplings shall not be used unless approved on project specific basis. For systems using cast iron pipe the seismic design forces are to be calculated utilizing $R_p = 3.0$.

7. <u>Refer to Pages A4.0 thru A4.1 for additional offset and setback allowances.</u>

REVIEWED FOR CODE COMPLIANCE
HCAi
OPM-0403
BY: William Staehlin
DATE: 01-26-2024
CALIFORNIA BUILDING CODE, 2022

REGISTERED PROFESSIONAL ENGINEER
MARCIN WASAZNIK
S 6612
STRUCTURAL
STATE OF CALIFORNIA

ISAT
A Division of Tomarco Contractor Specialties

International Seismic Application Technology
14848 Northam Street, La Mirada, CA 90638
877-999-4728 (Toll Free) 714-523-0845 (fax)
www.isatsb.com

GENERAL LAYOUT GUIDELINES

SINGLE HUNG PIPE (CONTINUED)

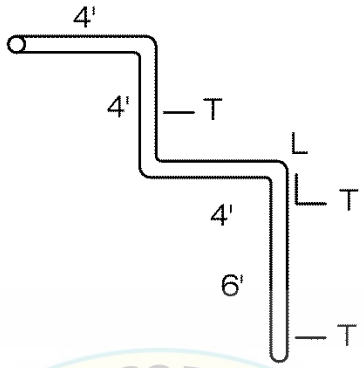

PLAN VIEW (N.T.S.)

BRACING LAYOUT GENERAL EXAMPLE
SHORT OFFSETS NOT EXCEEDING 10 FOOT CUMULATIVE LENGTH
T - TRANSVERSE BRACE ARM ASSEMBLY AND DECK ANCHORAGE
L - LONGITUDINAL BRACE ARM ASSEMBLY AND DECK ANCHORAGE

REVIEWED FOR CODE COMPLIANCE
OPM-0403
BY: William Staehlin
DATE: 01-26-2024
CALIFORNIA BUILDING CODE, 2022

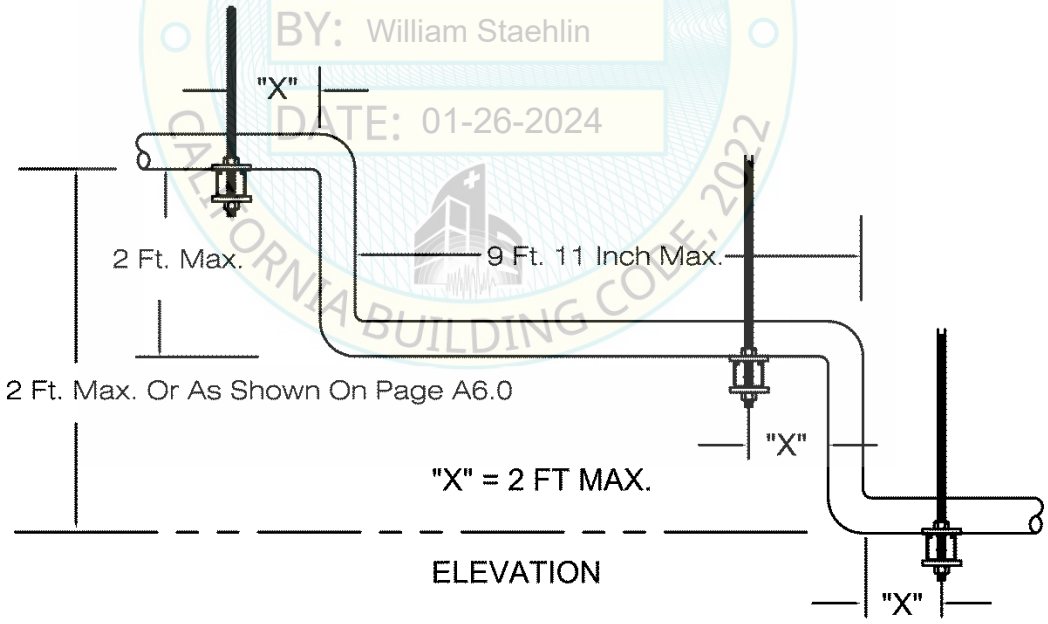

FOR SEISMIC RESTRAINT PURPOSES
WHERE CUMULATIVE VERTICAL RISE ≤ 2 FT OVER A HORIZONTAL SPAN NO GREATER THAN 9 FT. 11 IN., TREAT AS A CONTINUOUS RUN.

REGISTERED PROFESSIONAL ENGINEER
MARCIN WASAZNIK
S-6612
STRUCTURAL
STATE OF CALIFORNIA

ISAT
A Division of Tomarco Contractor Specialties
International Seismic Application Technology
14848 Northam Street, La Mirada, CA 90638
877-999-4728 (Toll Free) 714-523-0845 (fax)
www.isatsb.com

GENERAL LAYOUT GUIDELINES

SINGLE HUNG PIPE (CONTINUED)

8. Where pipe runs drop vertically to floor mounted equipment, install a transverse brace on the last hanger before the drop. Last hanger (X1) must be within 2 feet of the drop for pipe up to 3" diameter or within 5 feet of the drop for larger pipe sizes. If the final length of pipe run (X2) leading up to connection to the equipment after the vertical drop exceeds 10 feet and the pipe is elevated 6 feet or less above the floor, install a transverse brace from the pipe to the floor. If the pipe is more than 6 feet above the floor, brace to the overhead structure. To minimize point of connection stress, pipe connections to equipment are to include a swing joint, flexible connector or loop.

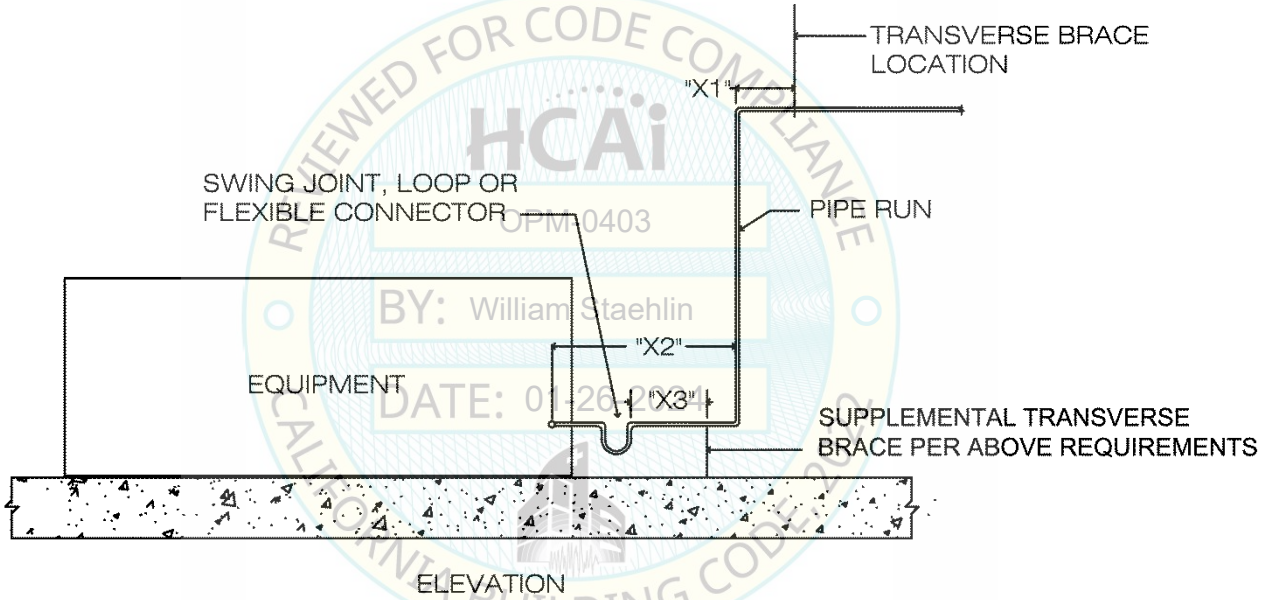

REVIEWED FOR CODE COMPLIANCE
HCAi
OPM-0403
BY: William Staehlin
DATE: 01-26-2024
CALIFORNIA BUILDING CODE 2022

GENERAL LAYOUT GUIDELINES

TRAPEZE MOUNTED PIPE

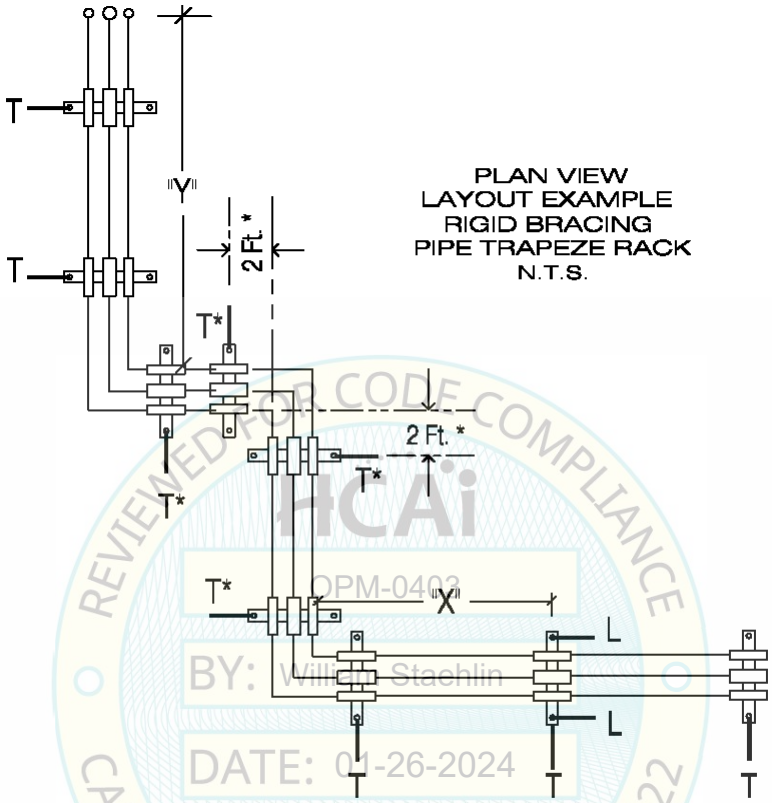

REVIEWED FOR CODE COMPLIANCE
HCAi
OPM-0403
BY: William Staehlin
DATE: 01-26-2024
CALIFORNIA BUILDING CODE 2022

1. From the Engineered Bracing Table, C-Series pages, for the correct weight range of trapeze rack determine the Maximum Transverse and the Maximum Longitudinal Brace Spacing.

2. As you begin laying out bracing, every trapeze run which requires bracing shall have a minimum of two Transverse Braces and one Longitudinal Brace. For the purposes of this manual, a “run” or an “offset” is defined as suspended trapeze of 10 foot minimum straight length.

REGISTERED PROFESSIONAL ENGINEER
MARCIN WASAZNIK
S-6612
STRUCTURAL
STATE OF CALIFORNIA

ISAT
A Division of Tomarco Contractor Specialties

International Seismic Application Technology
14848 Northam Street, La Mirada, CA 90638
877-999-4728 (Toll Free) 714-523-0845 (fax)
www.isatsb.com

GENERAL LAYOUT GUIDELINES

TRAPEZE MOUNTED PIPE (CONTINUED)

3. Begin at one end of the run and determine the length of the initial straight run. If the initial run is less than the required Transverse Brace spacing, install Transverse Bracing at the first and last hanger location. If the Transverse Brace on the last hanger is to also act as a Longitudinal Brace for the next run, ensure that the installed brace arm and anchorage meet the Engineered Bracing Table requirements for the Longitudinal Brace.

   If the initial straight run is greater than the Maximum Transverse Brace spacing but less than the Maximum Longitudinal Brace Spacing, the initial Transverse Brace may be installed beyond the start of the run at a maximum distance of 1/2 the allowed Transverse Brace spacing.

4. After installing the initial Transverse Brace, proceed along the run a distance equal to the Maximum Transverse Brace Spacing. Install Transverse and Longitudinal bracing at the nearest hanger not exceeding this distance.

5. Repeat this procedure to completion of the entire run.

6. The ultimate number of installed brace arms may be minimized by the judicious placement of bracing at changes in run direction. If a Transverse Brace is installed within 2 feet of a 90 degree change in run direction, it may also serve as the Longitudinal Brace for the next portion of the run provided that the brace arm and the deck anchorage have been sized to meet the requirements of the Longitudinal Brace.

7. Similarly, a Longitudinal Brace at a 90 degree change in direction may act as a Transverse Brace if it is located within 2 feet of the change in direction.

8. The above layout guidelines are not applicable to piping systems engineered on the basis of thermal pipe stress analysis.

REVIEWED FOR CODE COMPLIANCE
ISAT
OPM-0403
By: William Staehlin
DATE: 01-26-2024
CALIFORNIA BUILDING CODE, 2022

REGISTERED PROFESSIONAL ENGINEER
MARCIN WASAZNIK
S-6612
STRUCTURAL
STATE OF CALIFORNIA

ISAT
A Division of Tomarco Contractor Specialties

International Seismic Application Technology
14848 Northam Street, La Mirada, CA 90638
877-999-4728 (Toll Free) 714-523-0845 (fax)
www.isatsb.com

GENERAL LAYOUT GUIDELINES

HVAC DUCT

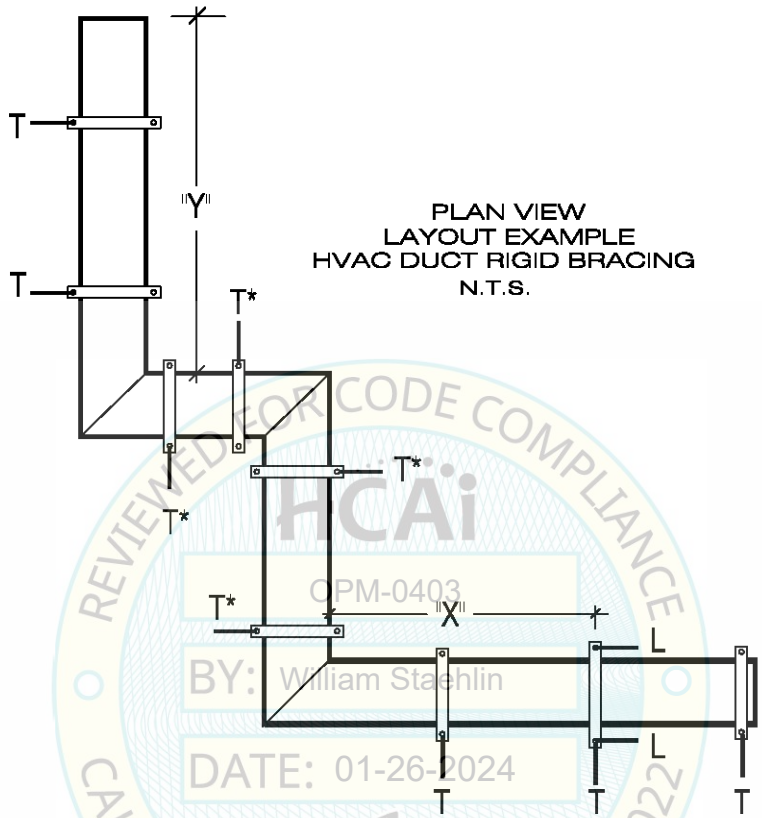

"X" and "Y" ≤ Max. Longitudinal Brace Spacing
T* – Brace Arm Size and Deck Anchorage Same As Longitudinal Brace

REVIEWED FOR CODE COMPLIANCE
HCAi
OPM-0403
BY: William Staehlin
DATE: 01-26-2024
CALIFORNIA BUILDING CODE 2022

1. From the Engineered Bracing Table, C-Series pages, for the correct weight range of HVAC duct determine the Maximum Transverse and the Maximum Longitudinal Brace Spacing.

2. As you begin laying out bracing, every duct run which requires bracing shall have a minimum of two Transverse Braces and one Longitudinal Brace. For the purposes of this manual, a “run” or an “offset” is defined as suspended duct of 10 foot minimum straight length.

GENERAL LAYOUT GUIDELINES

HVAC DUCT (CONTINUED)

3. Begin at one end of the run and determine the length of the initial straight run. If the initial run is less than the required Transverse Brace spacing, install Transverse Bracing at the first and last hanger location. If the Transverse Brace on the last hanger is to also act as a Longitudinal Brace for the next run, ensure that the installed brace arm, brace attachment and anchorage meet the Engineered Bracing Table requirements for the Longitudinal Brace.

   If the initial straight run is greater than the Maximum Transverse Brace spacing but less than the Maximum Longitudinal Brace Spacing, the initial Transverse Brace may be installed beyond the start of the run at a maximum distance of 1/2 the allowed Transverse Brace spacing.

4. After installing the initial Transverse Brace, proceed along the run a distance equal to the Maximum Transverse Brace Spacing. Install Transverse and Longitudinal bracing at the nearest hanger not exceeding this distance. Repeat this procedure to completion of the entire run.

5. Install a Transverse Brace within 2 duct widths on one side or the other of every 90 degree change in duct direction.

6. The ultimate number of installed brace arms may be minimized by the judicious placement of bracing at changes in run direction. If a Transverse Brace is installed within 2 feet or a maximum of 2 x the duct width of a 90 degree change in run direction, it may also serve as the Longitudinal Brace for the next portion of the run provided that the brace arm and the deck anchorage have been sized to meet the requirements of the Longitudinal Brace.

7. Similarly, a Longitudinal Brace at a 90 degree change in direction may act as a Transverse Brace if it is located within 2 feet or a maximum of 2 x the duct width of the change in direction.

8. Where a straight duct run transitions in size from one requiring bracing to a smaller size that does not require bracing, install Transverse Bracing on the smaller duct at the first hanger after the transition.

REVIEWED FOR CODE COMPLIANCE
HCAI
OPM-0403
BY: William Staehlin
DATE: 01-26-2024
CALIFORNIA BUILDING CODE, 2022

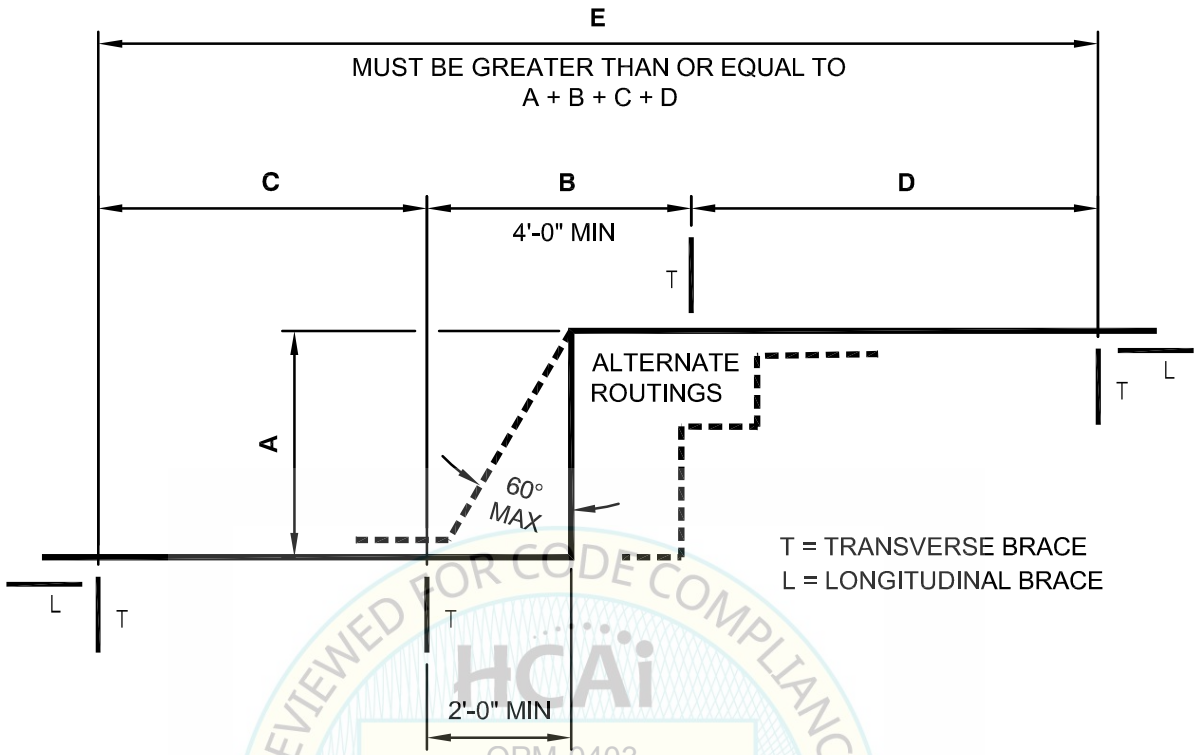

MAXIMUM OFFSET DIMENSION WELDED STEEL PIPES	
A	1/2 OF MAX TRANSVERSE BRACE SPACING FROM C-SERIES BRACING TABLES.
B	1/2 OF MAX TRANSVERSE BRACE SPACING FROM C-SERIES BRACING TABLES.
C & D	MAX TRANSVERSE BRACE SPACING FROM C-SERIES BRACING TABLES.
E	MAX LONGITUDINAL BRACE SPACING FROM C-SERIES BRACING TABLES.

NOTES:
1. REFER TO C-SERIES BRACING TABLES FOR LONGITUDINAL AND TRANSVERSE BRACE SPACING AND BRACE LOADS.

REVIEWED FOR CODE COMPLIANCE
HCAi
OPM-0403
BY: William Staehlin
DATE: 01-26-2024
CALIFORNIA BUILDING CODE

MAXIMUM OFFSET DIMENSION - WELDED STEEL PIPE

REGISTERED PROFESSIONAL ENGINEER
MARCIN WASAZNIK
S 6612
STRUCTURAL
STATE OF CALIFORNIA

ISAT
A Division of Tomarco Contractor Specialties

International Seismic Application Technology
14848 Northam Street, La Mirada, CA 90638
877-999-4728 (Toll Free) 714-523-0845 (fax)
www.isatsb.com

Rev. 3
12/11/19

Page
A3.0P

L = LONGITUDINAL BRACE

T = TRANSVERSE BRACE

OTHER LONGITUDINAL AND TRANSVERSE BRACES NOT SHOWN ARE REQUIRED IN ACCORDANCE WITH THE GENERAL LAYOUT GUIDELINES.

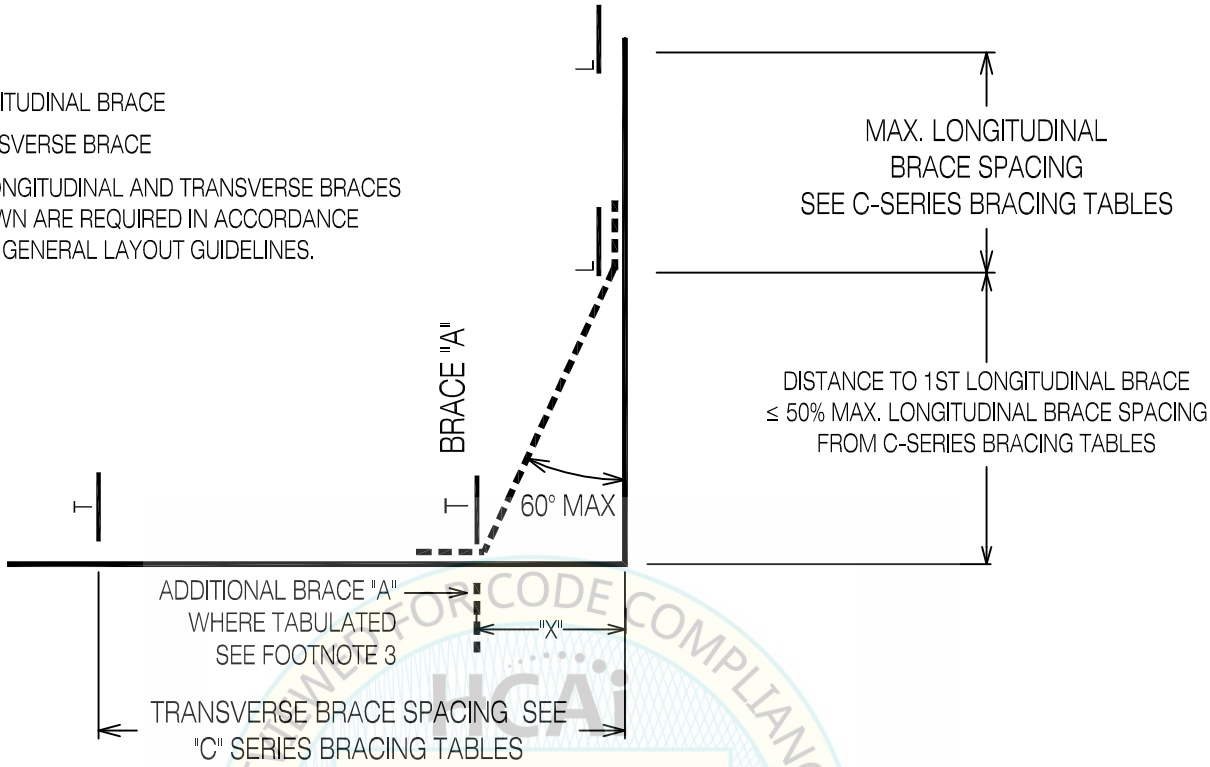

REVIEWED FOR CODE COMPLIANCE BY: OPM-0403 DATE: 01-26-2024 CALIFORNIA BUILDING CODE, 2022

MAXIMUM SET BACK DIMENSION
WELDED STEEL PIPE

Size In	Schedule	MAXIMUM SET BACK DIMENSION 0.25 G's Maximum Allowable Offset Ft	0.50 G's Maximum Allowable Offset Ft	0.75 G's Maximum Allowable Offset Ft	1.00 G's Maximum Allowable Offset Ft
2	40	6	6	4	2
3	40	10	8	6	4
4	40	10	10	6	6
6	40	10	10	10 [3]	10 [3]
8	40	10	10 [3]	10 [3]	10 [3]
10	40	10	10 [3]	10 [3]	---

1. BRACE "A" HAS THE SAME BRACE REACTION AND ANCHORAGE REQUIREMENTS AS A LONGITUDINAL BRACE AS DEFINED IN THE C-SERIES BRACING TABLES.
2. WHERE NOTED ON THE CHART, PROVIDE AN ADDITIONAL TRANSVERSE BRACE (RIGID BRACE OR PAIR OF CABLE BRACES) WITH THE SAME MINIMUM BRACE ASSEMBLY AND ANCHORAGE AS TABULATED IN THE C-SERIES TABLES FOR THE G-FORCE AND PIPE SIZE.

For Transverse Brace "A" Also Acting As Longitudinal Brace
For Adjacent Run With Setback

MAXIMUM SET BACK DIMENSION - STEEL PIPE

REGISTERED PROFESSIONAL ENGINEER MARCIN WASAZNIK S-6612 STRUCTURAL STATE OF CALIFORNIA

ISAT
A Division of Tomarco Contractor Specialties
International Seismic Application Technology
14848 Northam Street, La Mirada, CA 90638
877-999-4728 (Toll Free) 714-523-0845 (fax)
www.isatsb.com

Rev. 3
12/12/19

Page
A4.0P

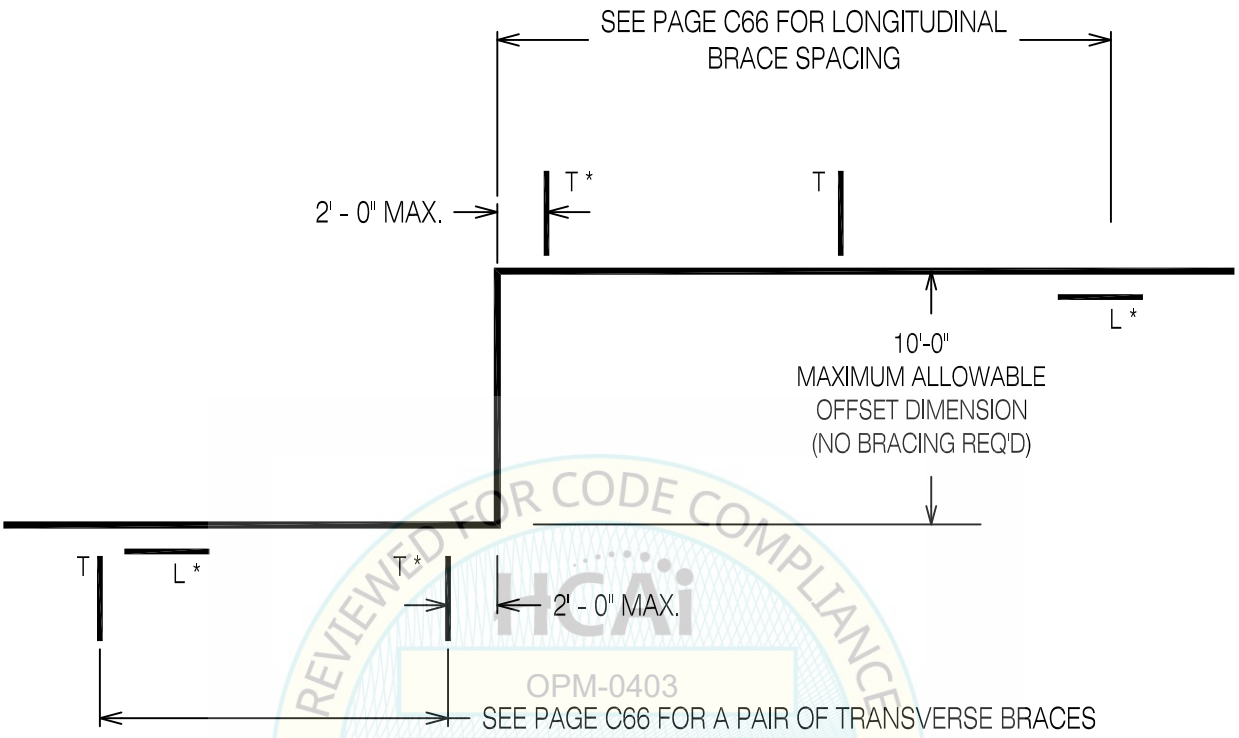

REVIEWED FOR CODE COMPLIANCE
HCAi
OPM-0403
BY: William Staehlin
DATE: 01-26-2024
CALIFORNIA BUILDING CODE, 2022

T * = TRANSVERSE BRACE DESIGN FORCE FOR BRACE ADJACENT TO OFFSET IS INCREASED BY x% (SEE TABLE).

L * = LONGITUDINAL BRACE DESIGN FORCE IN THE RUN ADJACENT TO THE OFFSET IS TO BE INCREASED BY x% (SEE TABLE). 2'-0" SECTION CONSIDERED IN CALCULATIONS.

ADDITIONAL TRANSVERSE BRACE NOT SHOWN FOR CLARITY.

DESIGN CRITERIA SHOWN CAN BE USED FOR ALL PROJECTS.

SPACING (ft)	TRANSVERSE INCREASE	LONGITUDINAL INCREASE
10	80%	40%
15	60%	30%
20	45%	23%
25	N/A	20%
30	N/A	16%
35	N/A	14%
40	N/A	12%

OFFSET DIMENSION, N0-HUB CAST IRON PIPE

REGISTERED PROFESSIONAL ENGINEER MARCIN WASAZNIK S-6612 STRUCTURAL STATE OF CALIFORNIA

ISAT
A Division of Tomarco Contractor Specialties

International Seismic Application Technology
14848 Northam Street, La Mirada, CA 90638
877-999-4728 (Toll Free) 714-523-0845 (fax)
www.isatsb.com

Rev. 3
12/20/18

Page
A4.1P

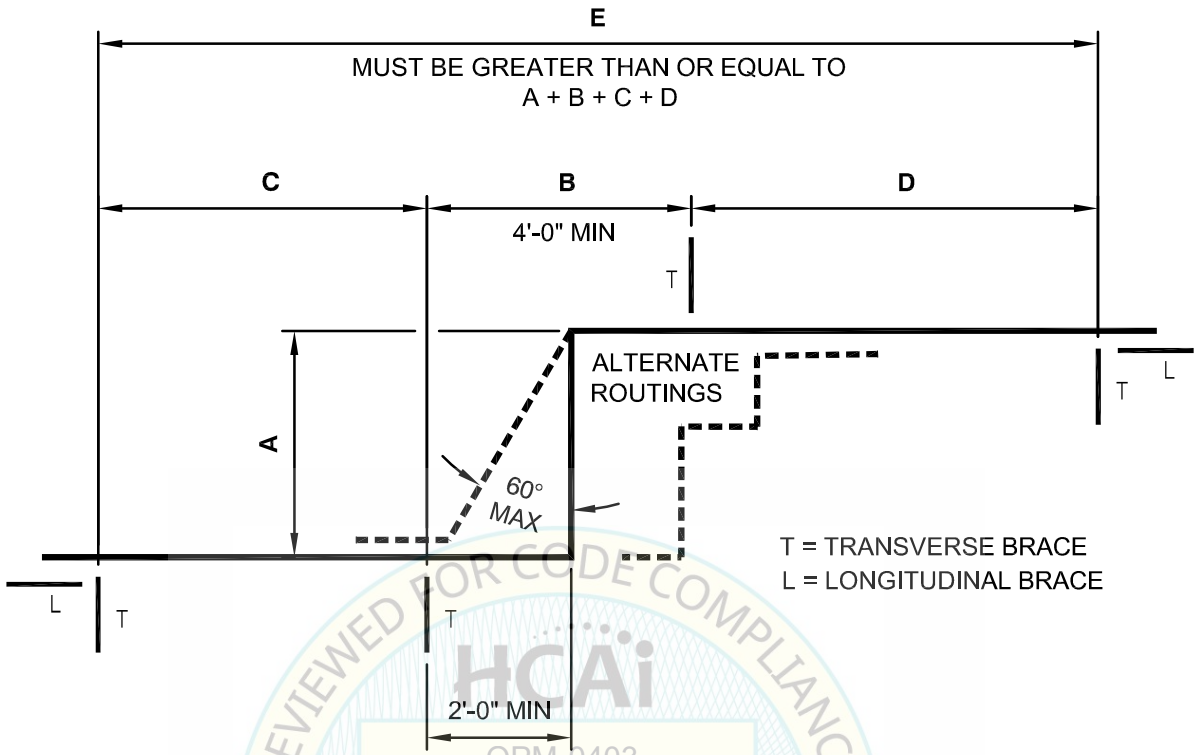

MAXIMUM OFFSET DIMENSION BRAZED COPPER PIPES	
A	1/2 OF MAX TRANSVERSE BRACE SPACING FROM C-SERIES BRACING TABLES.
B	1/2 OF MAX TRANSVERSE BRACE SPACING FROM C-SERIES BRACING TABLES.
C & D	MAX TRANSVERSE BRACE SPACING FROM C-SERIES BRACING TABLES.
E	MAX LONGITUDINAL BRACE SPACING FROM C-SERIES BRACING TABLES.

NOTES:

1. REFER TO C-SERIES BRACING TABLES FOR LONGITUDINAL AND TRANSVERSE BRACE SPACING AND BRACE LOADS.

REVIEWED FOR CODE COMPLIANCE
HCAi
OPM-0403
BY: William Staehlin
DATE: 01-26-2024
CALIFORNIA BUILDING CODE

MAXIMUM OFFSET DIMENSION - BRAZED COPPER TUBING

REGISTERED PROFESSIONAL ENGINEER
MARCIN WASAZNIK
S 6612
STRUCTURAL
STATE OF CALIFORNIA

ISAT
A Division of Tomarco Contractor Specialties

International Seismic Application Technology
14848 Northam Street, La Mirada, CA 90638
877-999-4728 (Toll Free) 714-523-0845 (fax)
www.isatsb.com

Rev. 3
12/11/19

Page
A5.0

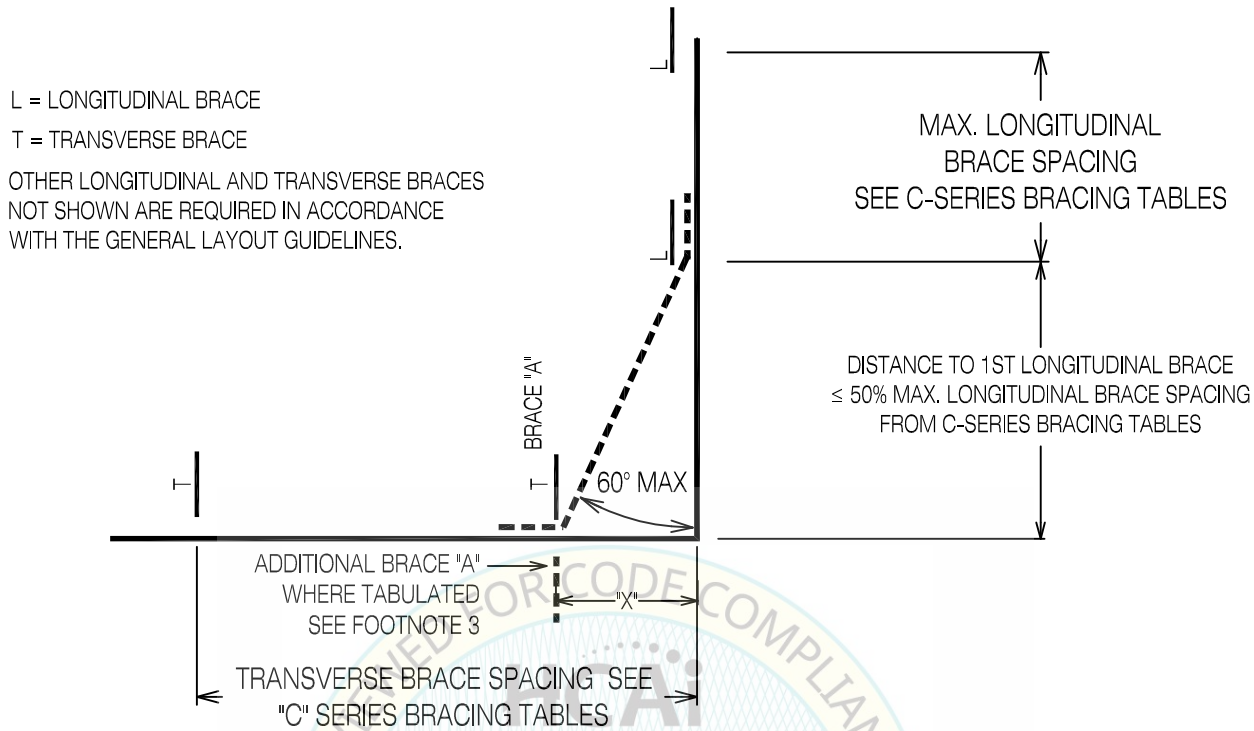

REVIEWED FOR CODE COMPLIANCE
OPM-0403
BY: William Staehlin
DATE: 01/26/2024
CALIFORNIA BUILDING CODE 2019

MAXIMUM SET BACK DIMENSION BRAZED COPPER TUBING					
		MAXIMUM SET BACK DIMENSION			
Size Inch	Schedule	0.25 G's Maximum Allowable Set Back Ft	0.50 G's Maximum Allowable Set Back Ft	0.75 G's Maximum Allowable Set Back Ft	1.00 G'S Maximum Allowable Set Back Ft
2	K or L	4	2	2	2
3	K or L	6	3	2	2
4	K or L	8	3	3	2
6	K or L	10	6	4	3
8	K or L	10	10	10 [3]	10 [3]

1. BRACE "A" HAS THE SAME BRACE REACTION AND ANCHORAGE REQUIREMENTS AS A LONGITUDINAL BRACE AS DEFINED IN THE C-SERIES BRACING TABLES.
2. AS SHOWN IN THE CHART ABOVE FOR 8", PROVIDE AN ADDITIONAL TRANSVERSE BRACE (RIGID BRACE OR PAIR OF CABLE BRACES) WITH THE SAME MINIMUM BRACE ASSEMBLY AND ANCHORAGE AS TABULATED IN THE C-SERIES TABLES FOR THE G-FORCE AND PIPE SIZE.
3. TABULATED VALUES ARE BASED ON SERVICE TEMPREATURE OF 100° F.

MAXIMUM SET BACK DIMENSION - BRAZED COPPER TUBING

For Transverse Brace "A" Also Acting As Longitudinal Brace For Adjacent Run

REGISTERED PROFESSIONAL ENGINEER MARCIN WASAZNIK S-6612 STRUCTURAL STATE OF CALIFORNIA

ISAT
A Division of Tomarco Contractor Specialties
International Seismic Application Technology
14848 Northam Street, La Mirada, CA 90638
877-999-4728 (Toll Free) 714-523-0845 (fax)
www.isatsb.com

Rev. 4
12/12/19

Page
A5.1

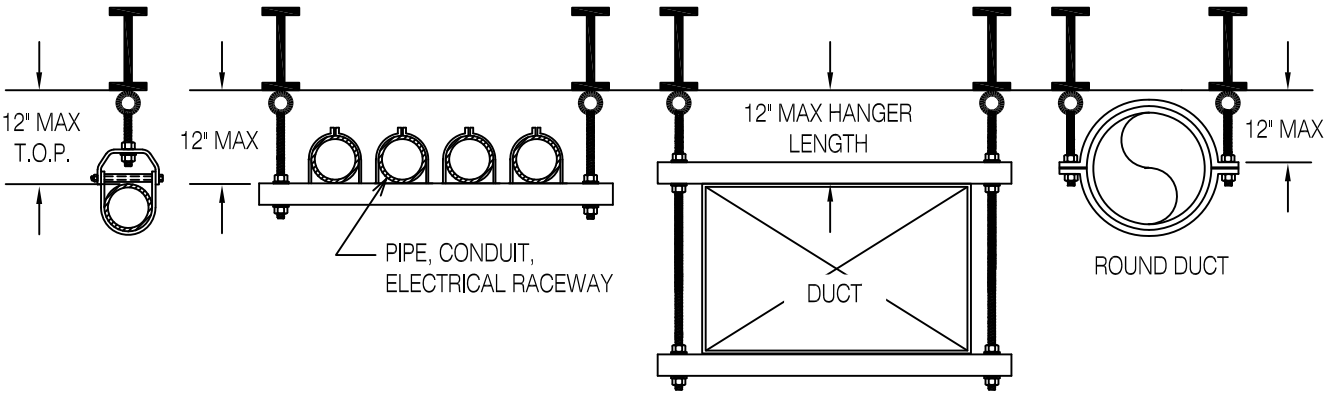

SECTION

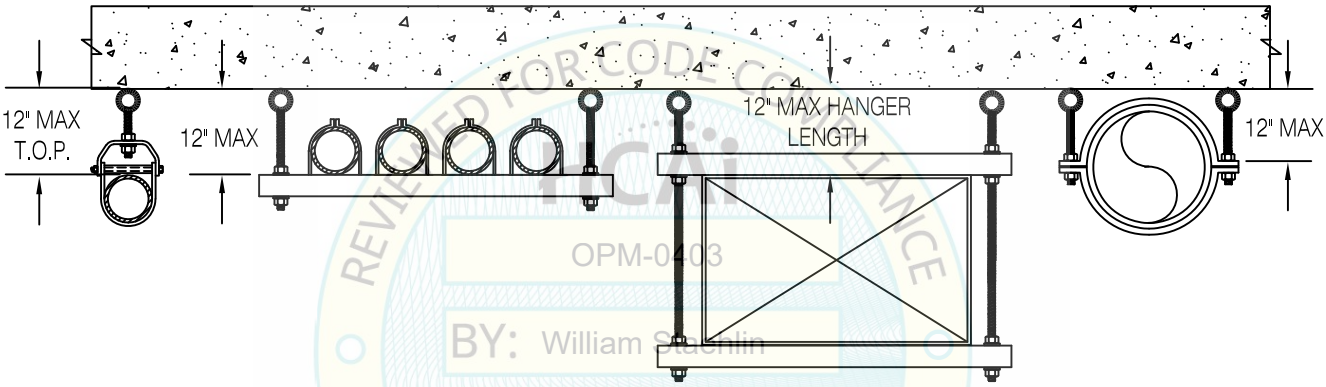

SECTION

REVIEWED FOR CODE COMPLIANCE
OPM-0403
BY: William Staehlin
DATE: 01/26/2024
CALIFORNIA BUILDING CODE, 2022

SEISMIC BRACING IS ALLOWED TO BE EXCLUDED UNDER THE FOLLOWING INSTALLATION CONDITIONS:

1. PIPING, DUCT OR ELECTRICAL RACEWAYS ARE SUPPORTED BY HANGERS.
2. EACH HANGER IN THE RUN IS 12 INCHES OR LESS IN LENGTH FROM THE SUPPORTING STRUCTURE TO:
   - TOP OF PIPE .
   - DUCT SUPPORT POINT. SUPPORT POINT IS BOTTOM OF DUCT AT LOCATIONS WITHOUT CROSS-TOP STRUT.
   - ELECTRICAL RACEWAY SUPPORT POINT.
3. WHERE ROD HANGERS ARE USED, CONNECTION TO STRUCTURE MUST BE EQUIPPED WITH SWIVELS TO PREVENT INELASTIC ROD BENDING. EXCEPTION: SWIVELS OR EYE NUTS NOT REQUIRED FOR INSTALLATIONS WITH ROD HANGERS 3/8" DIAMETER OR LESS.
4. PROVISIONS ARE MADE TO ELIMINATE SEISMIC IMPACT FOR COMPONENTS VULNERABLE TO IMPACT.

DROP LENGTH EXCLUSIONS - SECTION

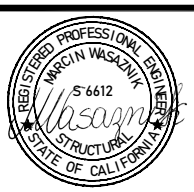

ISAT
A Division of Tomarco Contractor Specialties
International Seismic Application Technology
14848 Northam Street, La Mirada, CA 90638
877-999-4728 (Toll Free) 714-523-0845 (fax)
www.isatsb.com

Rev. 4
12/04/18

Page
A6.0

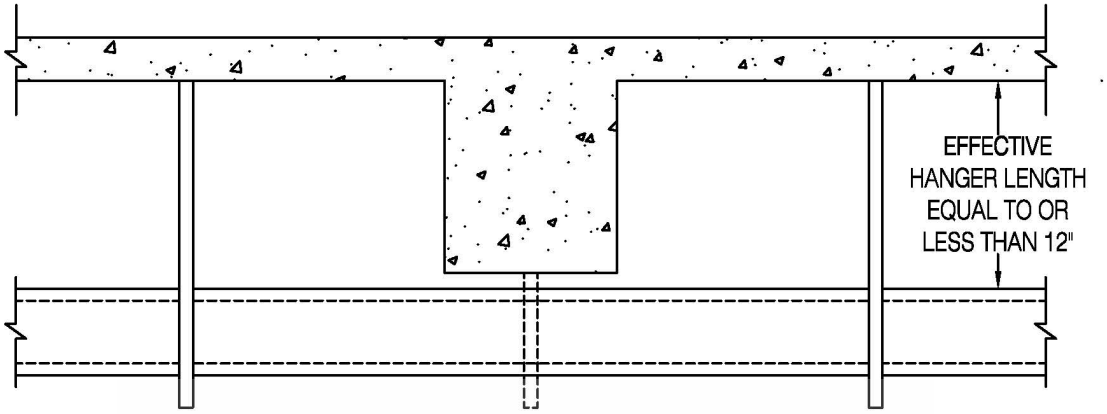

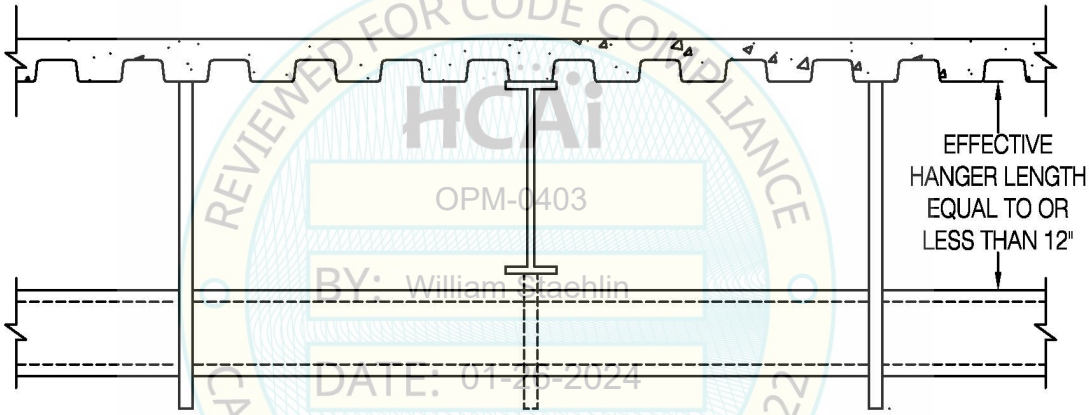

REVIEWED FOR CODE COMPLIANCE
HCAi
OPM-0403
BY: William Staehlin
DATE: 01-26-2024
CALIFORNIA BUILDING CODE, 2022

WHERE BRACING IS OMITTED DUE TO THE 12" EXCEPTION:

1. FOR ALL THE HANGERS IN THE RUN THE EFFECTIVE HANGER LENGTH MUST BE EQUAL TO OR LESS THAN 12" AS SHOWN.
2. A SNUG FIT TO THE BEAM DOES NOT MEET THE REQUIREMENT.

DROP LENGTH EXCLUSIONS - LONGITUDINAL SECTION

REGISTERED PROFESSIONAL ENGINEER
MARCIN WASAZNIK
S 6612
STRUCTURAL
STATE OF CALIFORNIA

ISAT
A Division of Tomarco Contractor Specialties
International Seismic Application Technology
14848 Northam Street, La Mirada, CA 90638
877-999-4728 (Toll Free) 714-523-0845 (fax)
www.isatsb.com

Rev. 3
12/29/15

Page
A6.1

INDEX - MEP SYSTEMS SEISMIC BRACING CONSTRUCTION DETAILS

PAGE	*DESCRIPTION*
	SINGLE HUNG PIPE
	RIGID BRACING
B1.4	1-WAY TRANSVERSE, WITH LRD
B1.5	1-WAY TRANSVERSE, WITH TWO LRDs
B1.10	1-WAY TRANSVERSE, STRUT CLAMP
B1.11	1-WAY TRANSVERSE, TRIPLE STRUT CLAMP
B1.12	1-WAY TRANSVERSE, ROLLER HUNG PIPE WITH CALCIUM SILICATE SUPPORT
B2.10	2-WAY TRANSVERSE, STRUT CLAMP
B2.11	2-WAY TRANSVERSE, TRIPLE STRUT CLAMP
B2.12	2-WAY TRANSVERSE, WITH LRD
B2.13	2-WAY TRANSVERSE, WITH TWO LRDs
B2.14	2-WAY TRANSVERSE, ROLLER HUNG PIPE WITH CALCIUM SILICATE SUPPORT
B3.0	2-WAY TRANSVERSE - LONGITUDINAL, WITH LRD
B3.1	2-WAY TRANSVERSE - LONGITUDINAL, WITH TWO LRDs
B3.3	2-WAY TRANSVERSE - LONGITUDINAL, WITH LRD AND WELDED LUG
B3.10	2-WAY TRANSVERSE - LONGITUDINAL, STRUT CLAMP
B3.11	2-WAY TRANSVERSE – LONGITUDINAL, TRIPLE STRUT CLAMP
B4.0	4-WAY TRANSVERSE - LONGITUDINAL, WITH LRD
B4.1	4-WAY TRANSVERSE - LONGITUDINAL, WITH TWO LRDs
B4.3	4-WAY TRANSVERSE - LONGITUDINAL, WITH LRD AND WELDED LUG
B4.10	4-WAY TRANSVERSE - LONGITUDINAL, STRUT CLAMP
B4.11	4-WAY TRANSVERSE - LONGITUDINAL, TRIPLE STRUT CLAMP
B4.12	4-WAY SPLAYED, STRUT CLAMP
B4.13	4-WAY SPLAYED, WITH LRD AND WELDED LUG
B4.14	4-WAY SPLAYED, WITH LRD
	CABLE BRACING
B6.4	2-WAY TRANSVERSE, WITH LRD
B6.5	2-WAY TRANSVERSE, WITH TWO LRDs
B6.10	2-WAY TRANSVERSE, STRUT CLAMP
B6.11	2-WAY TRANSVERSE, TRIPLE STRUT CLAMP
B6.12	2-WAY TRANSVERSE, ROLLER HUNG PIPE WITH CALCIUM SILICATE SUPPORT
B7.0	4-WAY TRANSVERSE - LONGITUDINAL, WITH LRD
B7.1	4-WAY TRANSVERSE - LONGITUDINAL, WITH TWO LRDs
B7.2	4-WAY TRANSVERSE - LONGITUDINAL, WITH WELDED LUG
B8.4	4-WAY TRANSVERSE - LONGITUDINAL,WITH LRD AND WELDED LUG
B8.9	4-WAY TRANSVERSE - LONGITUDINAL,STRUT CLAMP
B8.10	4-WAY SPLAYED, STRUT CLAMP
B8.11	4-WAY TRANSVERSE – LONGITUDINAL, TRIPLE STRUT CLAMP
B9.0	4-WAY SPLAYED, WITH LRD
B9.1	4-WAY SPLAYED, WITH TWO LRDs
B9.1.1	4-WAY SPLAYED, WITH LRD AND WELDED LUG
B10.1	4-WAY TRANSVERSE - LONGITUDINAL, ROLLER HUNG PIPE WITH CALCIUM SILICATE SUPPORT
B10.2	4-WAY SPLAYED TRANSVERSE - LONGITUDINAL, ROLLER HUNG PIPE WITH CALCIUM SILICATE SUPPORT

REVIEWED FOR CODE COMPLIANCE
HCAI
OPM-0403
BY: William Staehlin
DATE: 01-26-2024
CALIFORNIA BUILDING CODE, 2022

REGISTERED PROFESSIONAL ENGINEER
MARCIN WASAZNIK
S 6612
STRUCTURAL
STATE OF CALIFORNIA

ISAT
A Division of Tomarco Contractor Specialties

International Seismic Application Technology
14848 Northam Street, La Mirada, CA 90638
877-999-4728 (Toll Free) 714-523-0845 (fax)
www.isatsb.com

Rev. 7
06/05/23

Page
B0.1

INDEX - MEP SYSTEMS SEISMIC BRACING CONSTRUCTION DETAILS (CONTINUED)

PAGE	*DESCRIPTION*
	TRAPEZE SUPPORTED PIPE
	RIGID BRACING
B11.0	1-WAY TRANSVERSE
B11.1	2-WAY TRANSVERSE
B11.2	3-WAY TRANSVERSE - LONGITUDINAL
B11.3	4-WAY TRANSVERSE - LONGITUDINAL
B11.4	4-WAY SPLAYED
B12.0	1-WAY TRANSVERSE, 2 TIERS
B12.1	2-WAY TRANSVERSE, 2 TIERS
B12.2	3-WAY TRANSVERSE - LONGITUDINAL, 2 TIERS
B12.3	4-WAY TRANSVERSE - LONGITUDINAL, 2 TIERS
B12.4	4-WAY SPLAYED, 2 TIERS
B13.0	1-WAY TRANSVERSE, 3 SUPPORT RODS
B13.1	2-WAY TRANSVERSE, 3 SUPPORT RODS
B13.2	4-WAY TRANSVERSE - LONGITUDINAL, 3 SUPPORT RODS
B13.3	5-WAY 2 TRANSVERSE - 3 LONGITUDINAL, 3 SUPPORT RODS
B13.4	5-WAY 1 TRANSVERSE - 4 LONGITUDINAL, 3 SUPPORT RODS
B13.5	6-WAY TRANSVERSE - LONGITUDINAL, 3 SUPPORT RODS
B14.0	1-WAY TRANSVERSE, 3 SUPPORT RODS, 2 TIERS
B14.1	2-WAY TRANSVERSE, 3 SUPPORT RODS, 2 TIERS
B14.2	4-WAY TRANSVERSE - LONGITUDINAL, 3 SUPPORT RODS, 2 TIERS
B14.3	5-WAY TRANSVERSE - LONGITUDINAL, 3 SUPPORT RODS, 2 TIERS
B14.4	6-WAY TRANSVERSE - LONGITUDINAL, 3 SUPPORT RODS, 2 TIERS
	CABLE BRACING
B15.0	2-WAY TRANSVERSE
B15.1	6-WAY TRANSVERSE - LONGITUDINAL
B15.2	4-WAY SPLAYED
B16.0	2-WAY TRANSVERSE, 2 TIERS
B16.1	6-WAY TRANSVERSE - LONGITUDINAL, 2 TIERS
B16.2	4-WAY SPLAYED, 2 TIERS
B17.0	2-WAY TRANSVERSE, 3 SUPPORT RODS
B17.1	8-WAY TRANSVERSE - LONGITUDINAL, 3 SUPPORT RODS
B18.0	2-WAY TRANSVERSE, 3 SUPPORT RODS, 2 TIERS
B18.1	8-WAY TRANSVERSE - LONGITUDINAL, 3 SUPPORT RODS, 2 TIERS

REVIEWED FOR CODE COMPLIANCE
ICAI
OPM-0403
BY: William Staehlin
DATE: 01-26-2024
CALIFORNIA BUILDING CODE, 2022

REGISTERED PROFESSIONAL ENGINEER MARCIN WASAZNIK S 6612 STRUCTURAL STATE OF CALIFORNIA

ISAT
A Division of Tomarco Contractor Specialties

International Seismic Application Technology
14848 Northam Street, La Mirada, CA 90638
877-999-4728 (Toll Free) 714-523-0845 (fax)
www.isatsb.com

Rev. 5
12/18/17
Page
B0.2

01/26/2024 OPM-0403: Reviewed for Code Compliance by William Staehlin Page 124 of 1157

INDEX - MEP SYSTEMS SEISMIC BRACING CONSTRUCTION DETAILS (CONTINUED)

PAGE	DESCRIPTION
	SINGLE HUNG CONDUIT
	RIGID BRACING
B19.0	1-WAY TRANSVERSE, WITH LRD
B19.2	2-WAY TRANSVERSE, WITH LRD
B19.4	2-WAY TRANSVERSE - LONGITUDINAL, WITH LRD
B19.6	4-WAY TRANSVERSE - LONGITUDINAL, WITH LRD
B19.8	4-WAY SPLAYED, WITH LRD
	CABLE BRACING
B19.20	2-WAY TRANSVERSE, WITH LRD
B19.22	4-WAY TRANSVERSE - LONGITUDINAL, WITH LRD
B19.23	4-WAY SPLAYED, WITH LRD
	TRAPEZE SUPPORTED CONDUIT
	RIGID BRACING
B20.0	1-WAY TRANSVERSE, 1 AND 2 TIER
B20.1	2-WAY TRANSVERSE
B20.2	3-WAY TRANSVERSE - LONGITUDINAL
B20.3	4-WAY TRANSVERSE - LONGITUDINAL
B20.4	4-WAY SPLAYED BRACING
B21.1	2-WAY TRANSVERSE, 2 TIER
B21.2	3-WAY TRANSVERSE - LONGITUDINAL, 2 TIER
B21.4	4-WAY SPLAYED, 2 TIER
B22.0	1-WAY TRANSVERSE, 3 ROD
B22.1	2-WAY TRANSVERSE, 3 ROD
B22.2	3-WAY TRANSVERSE - LONGITUDINAL, 3 ROD
B22.3	4-WAY TRANSVERSE - LONGITUDINAL, 3 ROD
B22.4	5-WAY TRANSVERSE - LONGITUDINAL, 3 ROD
B22.5	6-WAY TRANSVERSE - LONGITUDINAL, 3 ROD
B23.0	1-WAY TRANSVERSE, 3 ROD, 2 TIER
B23.1	2-WAY TRANSVERSE, 3 ROD, 2 TIER
B23.2	4-WAY TRANSVERSE - LONGITUDINAL, 3 ROD, 2 TIER
B23.3	5-WAY TRANSVERSE - LONGITUDINAL, 3 ROD, 2 TIER
B23.4	6-WAY TRANSVERSE - LONGITUDINAL, 3 ROD, 2 TIER
	CABLE BRACING
B24.0	2-WAY TRANSVERSE
B24.1	6-WAY TRANSVERSE - LONGITUDINAL
B24.2	4-WAY SPLAYED
B25.0	2-WAY TRANSVERSE, 2 TIER
B25.1	6-WAY TRANSVERSE - LONGITUDINAL, 2 TIER
B25.2	4-WAY SPLAYED, 2 TIER
B26.0	2-WAY TRANSVERSE, 3 ROD
B26.1	8-WAY TRANSVERSE - LONGITUDINAL, 3 ROD
B27.0	2-WAY TRANSVERSE, 3 ROD, 2 TIER
B27.1	8-WAY TRANSVERSE - LONGITUDINAL, 2 TIER

REVIEWED FOR CODE COMPLIANCE
HCAi
OPM-0403
BY: William Staehlin
DATE: 01-26-2024
CALIFORNIA BUILDING CODE, 2022

REGISTERED PROFESSIONAL ENGINEER MARCIN WASAZNIK S 6612 STRUCTURAL STATE OF CALIFORNIA

ISAT
A Division of Tomarco Contractor Specialties

International Seismic Application Technology
14848 Northam Street, La Mirada, CA 90638
877-999-4728 (Toll Free) 714-523-0845 (fax)
www.isatsb.com

Rev. 6
06/14/18
Page
B0.3

01/26/2024 OPM-0403: Reviewed for Code Compliance by William Staehlin Page 125 of 1157

INDEX - MEP SYSTEMS SEISMIC BRACING CONSTRUCTION DETAILS (CONTINUED)

PAGE	*DESCRIPTION*
	TRAPEZE SUPPORTED RECTANGULAR HVAC DUCT
	RIGID BRACING
B30.0	1-WAY TRANSVERSE
B30.1	2-WAY TRANSVERSE
B30.2	3-WAY TRANSVERSE - LONGITUDINAL
B30.3	4-WAY TRANSVERSE - LONGITUDINAL
B30.4	4-WAY SPLAYED
	CABLE BRACING
B31.0	2-WAY TRANSVERSE
B31.1	6-WAY TRANSVERSE - LONGITUDINAL
B31.2	4-WAY SPLAYED
	2-ROD ROUND HVAC DUCT
	RIGID BRACING
B33.0	1-WAY TRANSVERSE, ROUND DUCT
B33.1	2-WAY TRANSVERSE, ROUND DUCT
B33.2	3-WAY TRANSVERSE - LONGITUDINAL, ROUND DUCT
B33.3	4-WAY TRANSVERSE - LONGITUDINAL, ROUND DUCT
B33.4	4-WAY SPLAYED, ROUND DUCT
	CABLE BRACING
B34.0	2-WAY TRANSVERSE, ROUND DUCT
B34.1	6-WAY TRANSVERSE - LONGITUDINAL, ROUND DUCT
B34.2	4-WAY SPLAYED, ROUND DUCT
	SUSPENDED EQUIPMENT
	RIGID BRACING
B38.0	3-WAY TRANSVERSE - LONGITUDINAL, 2 SUPPORT RODS
B38.1	4-WAY SPLAYED, 4 SUPPORT RODS
B38.2	8-WAY SPLAYED, 6 SUPPORT RODS
B38.3	3-WAY TRANSVERSE - LONGITUDINAL, 2 SUPPORT RODS, LUG CONNECTION
B38.4	4-WAY SPLAYED, 4 SUPPORT RODS, LUG CONNECTION
B38.5	8-WAY SPLAYED, 6 SUPPORT RODS, LUG CONNECTION
	CABLE BRACING
B39.0	4-WAY SPLAYED
B39.1	4-WAY SPLAYED, 4 SUPPORT RODS
B39.2	8-WAY SPLAYED, 6 SUPPORT RODS
B39.5	4-WAY SPLAYED, 2 SUPPORT RODS, LUG CONNECTION
B39.6	4-WAY SPLAYED, 4 SUPPORT RODS, LUG CONNECTION
B39.7	8-WAY SPLAYED, 6 SUPPORT RODS, LUG CONNECTION

REVIEWED FOR CODE COMPLIANCE
HCAI
OPM-0403
BY: William Staehlin
DATE: 01-26-2024
CALIFORNIA BUILDING CODE, 2022

REGISTERED PROFESSIONAL ENGINEER MARCIN WASAZNIK S 6612 STRUCTURAL STATE OF CALIFORNIA

ISAT
A Division of Tomarco Contractor Specialties

International Seismic Application Technology
14848 Northam Street, La Mirada, CA 90638
877-999-4728 (Toll Free) 714-523-0845 (fax)
www.isatsb.com

Rev. 5
12/18/17
Page
B0.4

01/26/2024 OPM-0403: Reviewed for Code Compliance by William Staehlin Page 126 of 1157

INDEX - MEP SYSTEMS SEISMIC BRACING CONSTRUCTION DETAILS (CONTINUED)

PAGE	DESCRIPTION
	TRAPEZE SUPPORTED CABLE TRAYS
	RIGID BRACING
B41.0	1-WAY TRANSVERSE
B41.1	2-WAY TRANSVERSE
B41.2	3-WAY TRANSVERSE - LONGITUDINAL
B41.3	4-WAY TRANSVERSE - LONGITUDINAL
B41.4	4-WAY SPLAYED
	CABLE BRACING
B43.0	2-WAY TRANSVERSE
B43.1	6-WAY TRANSVERSE - LONGITUDINAL
B43.2	4-WAY SPLAYED
	BUS DUCT TRAPEZE
	RIGID BRACING
B45.0	1-WAY TRANSVERSE
B45.1	2-WAY TRANSVERSE
B45.2	3-WAY TRANSVERSE - LONGITUDINAL
B45.3	4-WAY TRANSVERSE - LONGITUDINAL
B45.4	4-WAY SPLAYED
	CABLE BRACING
B46.0	2-WAY TRANSVERSE
B46.1	6-WAY TRANSVERSE - LONGITUDINAL
B46.2	4-WAY SPLAYED

REVIEWED FOR CODE COMPLIANCE
HCAi
OPM-0403
BY: William Staehlin
DATE: 01-26-2024
CALIFORNIA BUILDING CODE, 2022

REGISTERED PROFESSIONAL ENGINEER
MARCIN WASAZNIK
S 6612
STRUCTURAL
STATE OF CALIFORNIA

ISAT
A Division of Tomarco Contractor Specialties

International Seismic Application Technology
14848 Northam Street, La Mirada, CA 90638
877-999-4728 (Toll Free) 714-523-0845 (fax)
www.isatsb.com

INDEX - MEP SYSTEMS SEISMIC BRACING CONSTRUCTION DETAILS (CONTINUED)

PAGE	DESCRIPTION
	ALTERNATE SINGLE HUNG PIPE & CONDUIT
	RIGID BRACING
B202.0	NON-CONCURRENT BRACING CONFIGURATION
	CABLE BRACING
B203.0	MIXED BRACING STYLES FOR SINGLE HUNG UTILIITY
B204.0	ALTERNATE CABLE, DUAL LRD ATTACHMENTS
	ALTERNATE TRAPEZE SUPPORTED
B220.0	BRACE ARM PATTERNS
B220.1	EQUIPMENT 3-WAY RIGID BRACING ALTERNATE BRACING PATTERN
B220.2	ALTERNATE EQUIPMENT RIGID BRACING OPTIONS
B221.0	TRAPEZE CABLE BRACING ALTERNATE BRACING PATTERNS
B221.1	ALTERNATE EQUIPMENT CABLE BRACING OPTIONS
B230.0	ALTERNATE HVAC DUCT CROSS-TOP BOX IN
B231.0	ALTERNATE HVAC DUCT BRACE ARMS TO LOWER TRAPEZE
B240.0	ALTERNATE TRAPEZE BRACE ATTACHMENT - OUTBOARD OF ROD
B241.0	ALTERNATE TRAPEZE BRACE ATTACHMENT - INBOARD OF ROD
B242.0	ALTERNATE TRAPEZE CONN. - BRACKET CONN. TO UNDERSIDE OF STRUT
B243.0	ALTERNATE TRAPEZE CONN. - BRACKET TO UNDERSIDE OF STRUT AT ROD
B244.0	ALTERNATE BRACE CONNECTION TO VERTICAL SUPPORT ROD ANCHORAGE
B246.0	LONGITUDINAL RIGID AND CABLE BRACING FOR TRAPEZED UTILITY
B250.0	ALTERNATE MOUNTING DETAIL FOR INSULATED PIPE
B251.0	ALTERNATE TRAPEZE SUPPORT - INVERTED OR BACK-BACK STRUT
	ALTERNATE BRACE ARM CONNECTIONS TO ROD STIFFENERS
B252.0	CONDUIT AND CABLE TRAY ON SAME TRAPEZE RACK
B280.0	SINGLE HUNG UTILITY - RIGID MINIMUM 36 INCHES BELOW DECK
B281.0	SINGLE HUNG UTILITY - RIGID MINIMUM 36 INCHES TO MINIMUM 12 INCHES BELOW DECK
B290.0	TRAPEZE - OUTBOARD OR INBOARD - 1-WAY RIGID BRACING
B291.0	TRAPEZE - OUTBOARD OR INBOARD - 2-WAY RIGID BRACING
B292.0	TRAPEZE - OUTBOARD OR INBOARD - CABLE BRACING
B293.0	DESIGN VALUES FOR ELEVATED BRACE ARM ATTACHMENTS

REVIEWED FOR CODE COMPLIANCE
OPM-0403
BY: William Staehlin
DATE: 01-26-2024
CALIFORNIA BUILDING CODE 2022

REGISTERED PROFESSIONAL ENGINEER
MARCIN WASAZNIK
S 6612
STRUCTURAL
STATE OF CALIFORNIA

ISAT
A Division of Tomarco Contractor Specialties

International Seismic Application Technology
14848 Northam Street, La Mirada, CA 90638
877-999-4728 (Toll Free) 714-523-0845 (fax)
www.isatsb.com

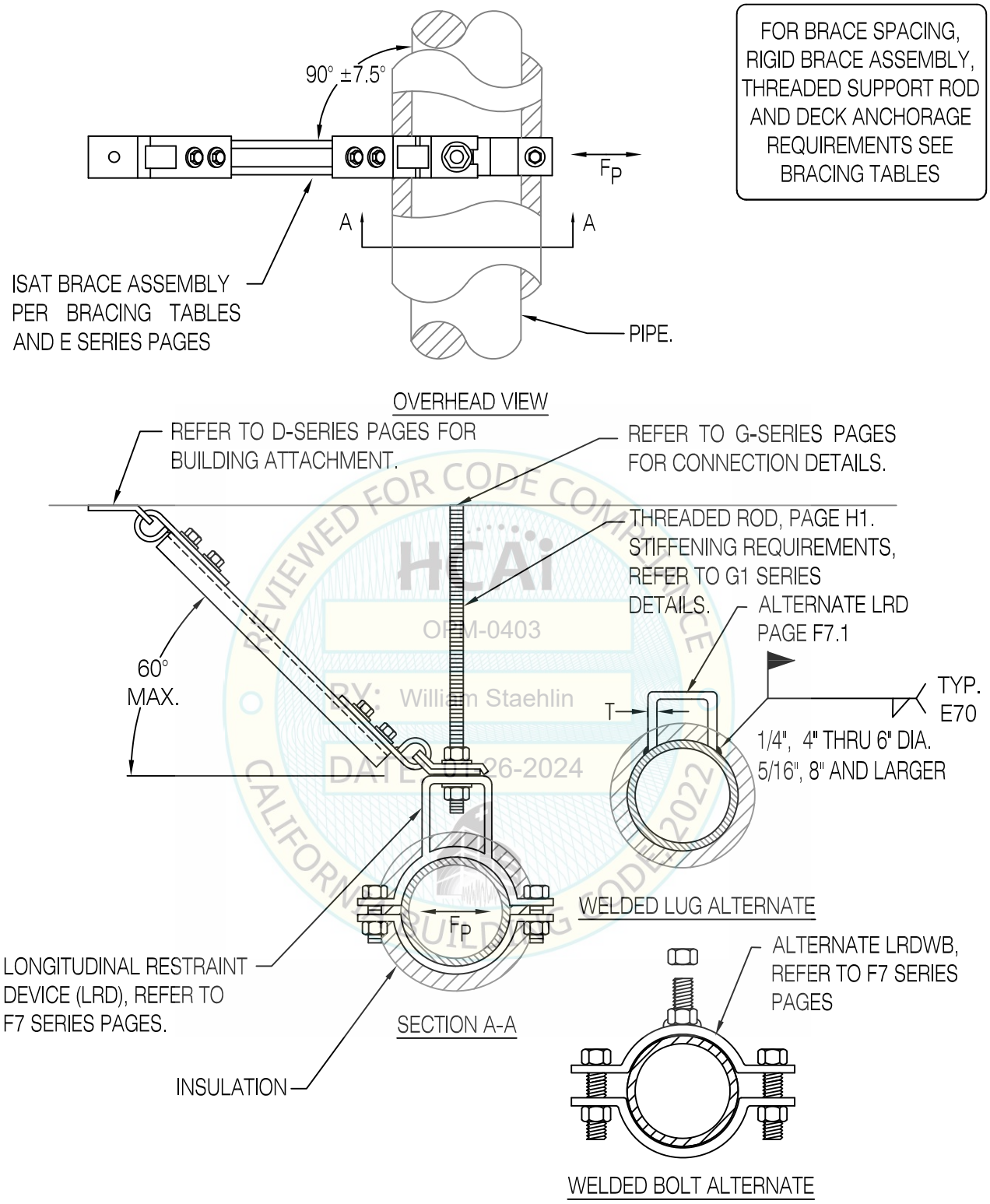

REVIEWED FOR CODE COMPLIANCE
HCAi
OPM-0403
BY: William Staehlin
DATE: 01-26-2024
CALIFORNIA BUILDING CODE 2022

SINGLE HUNG PIPE, WITH LRD
1-WAY TRANSVERSE, RIGID BRACING

REGISTERED PROFESSIONAL ENGINEER
MARCIN WASAZNIK
S-6612
STRUCTURAL
STATE OF CALIFORNIA

ISAT
A Division of Tomarco Contractor Specialties

International Seismic Application Technology
14848 Northam Street, La Mirada, CA 90638
877-999-4728 (Toll Free) 714-523-0845 (fax)
www.isatsb.com

Rev. 3
10/05/18

Page
B1.4

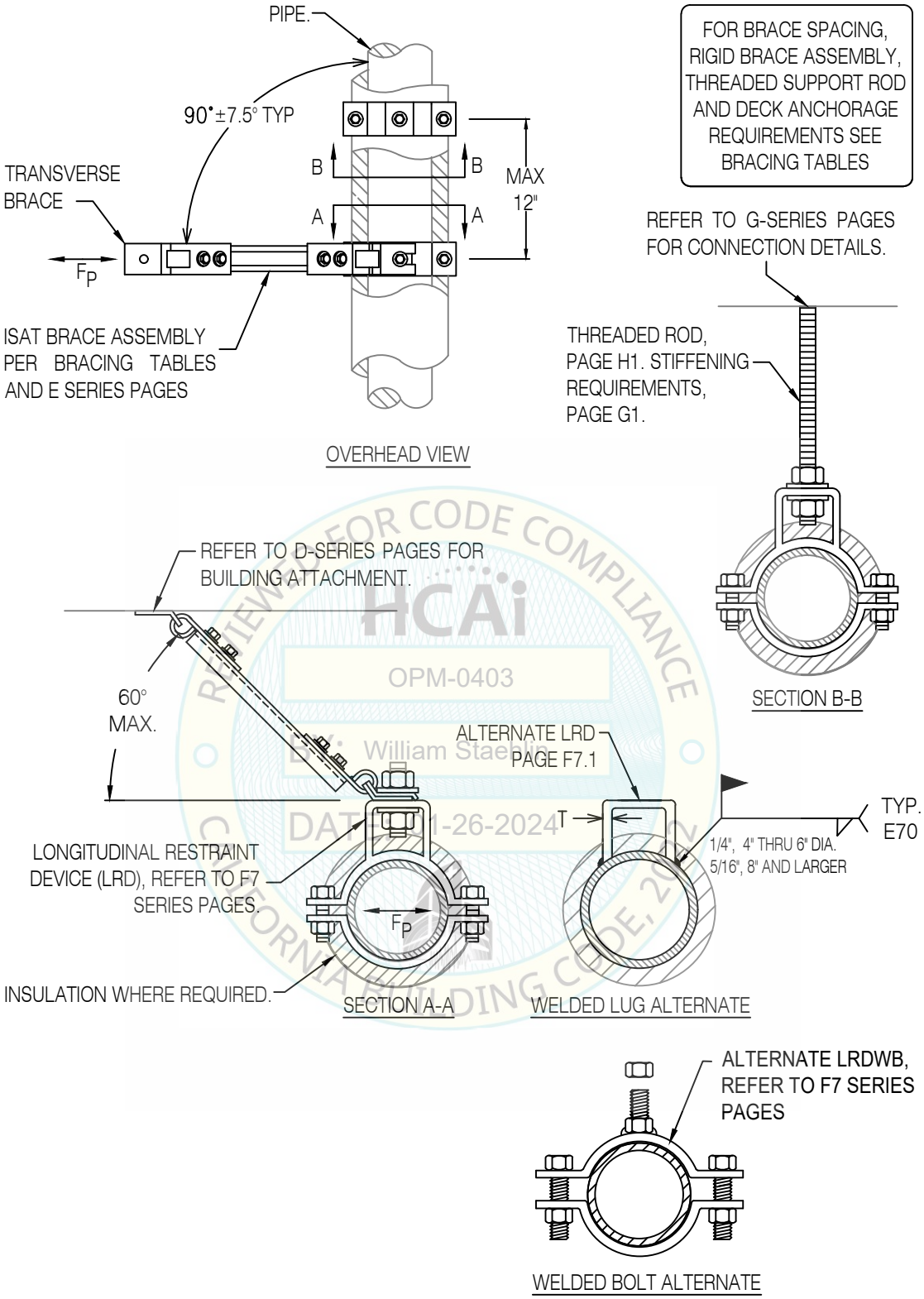

REVIEWED FOR CODE COMPLIANCE
HCAi
OPM-0403
By: William Staehlin
DATE: 1-26-2024
CALIFORNIA BUILDING CODE, 2022

SINGLE HUNG PIPE, WITH TWO LRDs
1-WAY TRANSVERSE RIGID BRACING

REGISTERED PROFESSIONAL ENGINEER MARCIN WASAZNIK S-6612 STRUCTURAL STATE OF CALIFORNIA

ISAT
A Division of Tomarco Contractor Specialties

International Seismic Application Technology
14848 Northam Street, La Mirada, CA 90638
877-999-4728 (Toll Free) 714-523-0845 (fax)
www.isatsb.com

Rev. 1
10/05/18

Page
B1.5

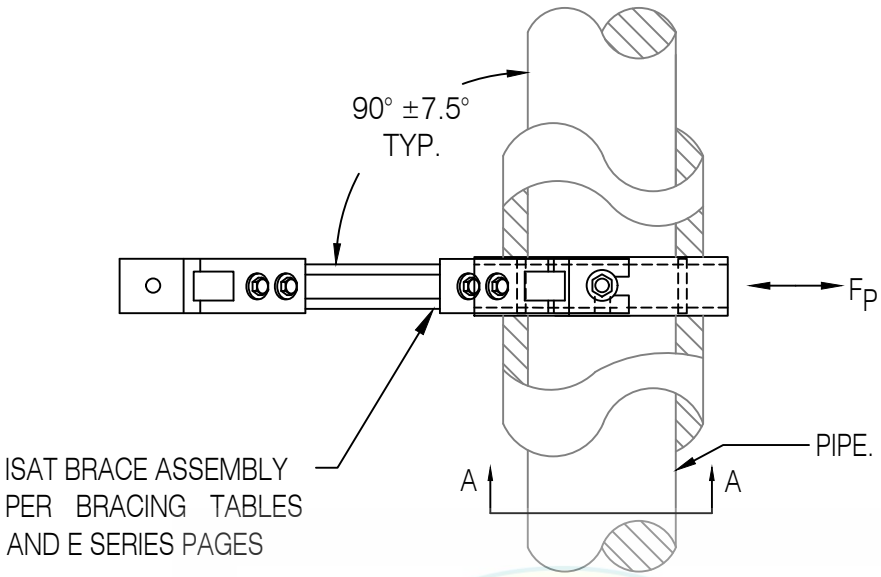

FOR BRACE SPACING, RIGID BRACE ASSEMBLY, THREADED SUPPORT ROD AND DECK ANCHORAGE REQUIREMENTS SEE BRACING TABLES

OVERHEAD VIEW

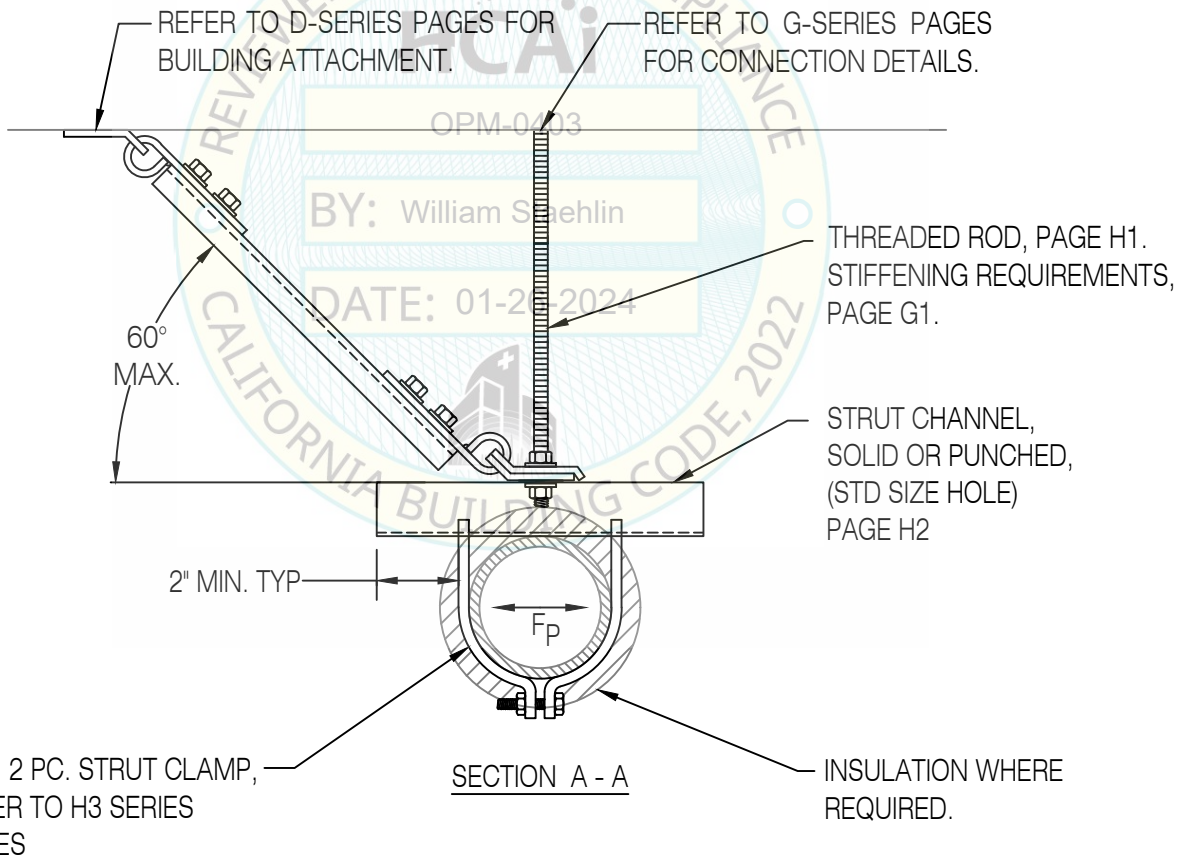

SECTION A - A

REVIEWED FOR CODE COMPLIANCE
FCAi
OPM-0403
BY: William Staehlin
DATE: 01-26-2024
CALIFORNIA BUILDING CODE, 2022

SINGLE HUNG PIPE, STRUT CLAMP
1-WAY TRANSVERSE, RIGID BRACING

REGISTERED PROFESSIONAL ENGINEER
MARCIN WASAZNIK
S-6612
STRUCTURAL
STATE OF CALIFORNIA

ISAT
A Division of Tomarco Contractor Specialties

International Seismic Application Technology
14848 Northam Street, La Mirada, CA 90638
877-999-4728 (Toll Free) 714-523-0845 (fax)
www.isatsb.com

Rev. 2
06/26/18

Page
B1.10

FOR BRACE SPACING, RIGID BRACE ASSEMBLY, THREADED SUPPORT ROD AND DECK ANCHORAGE REQUIREMENTS SEE BRACING TABLES

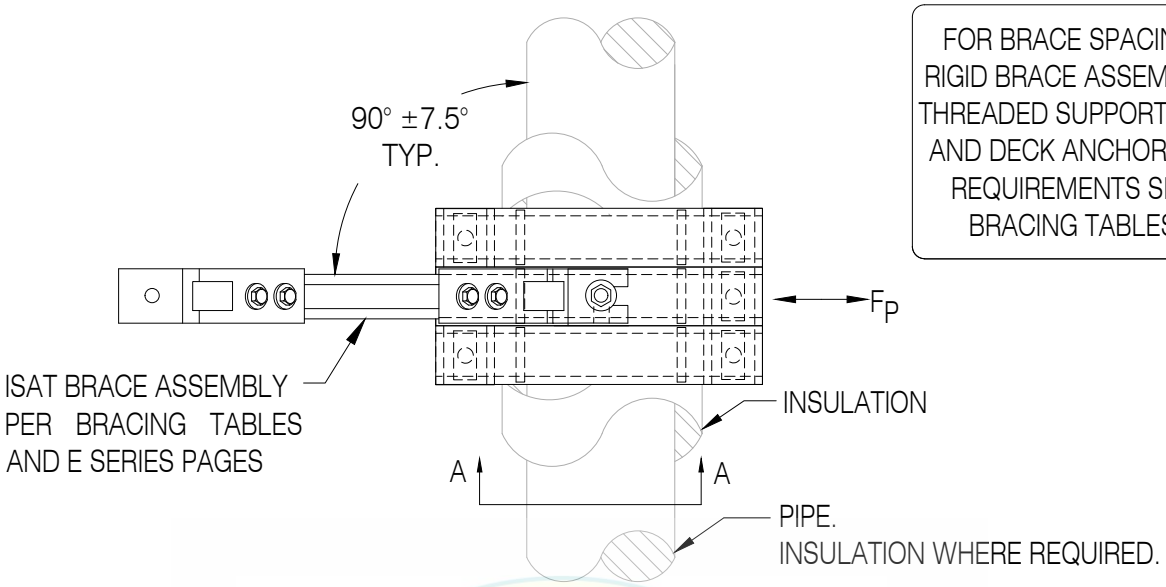

OVERHEAD VIEW

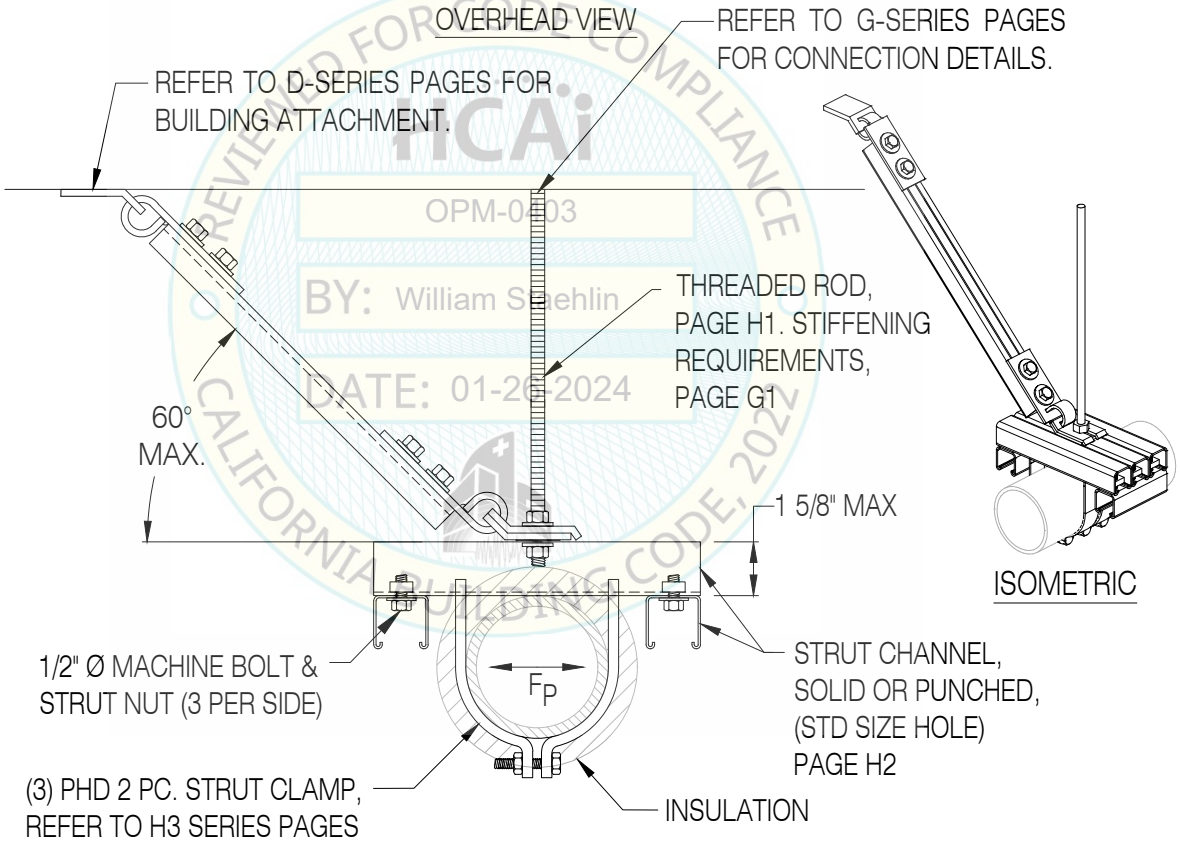

ISOMETRIC

SECTION A - A

REVIEWED FOR CODE COMPLIANCE
ICAi
OPM-0403
BY: William Staehlin
DATE: 01-26-2024
CALIFORNIA BUILDING CODE, 2022

SINGLE HUNG PIPE, TRIPLE STRUT CLAMP
1-WAY TRANSVERSE, RIGID BRACING

REGISTERED PROFESSIONAL ENGINEER MARCIN WASAZNIK S-6612 STRUCTURAL STATE OF CALIFORNIA

ISAT
A Division of Tomarco Contractor Specialties
International Seismic Application Technology
14848 Northam Street, La Mirada, CA 90638
877-999-4728 (Toll Free) 714-523-0845 (fax)
www.isatsb.com

Rev. 0
06/26/18

Page
B1.11

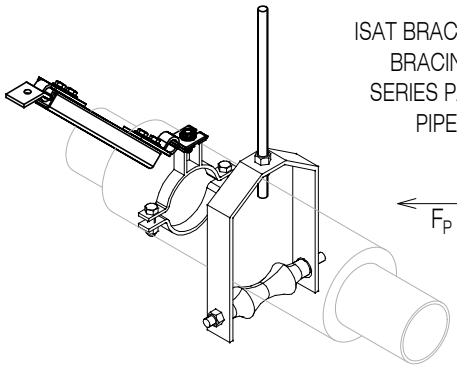

ISOMETRIC VIEW

**STEEL PIPE CONFORMING TO ASTM A53 TYPE E GR. B
COPPER PIPE TYPE K OR L

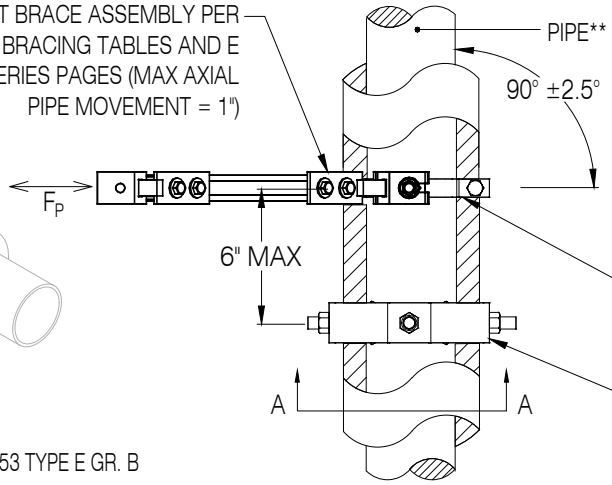

OVERHEAD VIEW

FOR BRACE SPACING, RIGID BRACE ASSEMBLY, THREADED SUPPORT ROD AND DECK ANCHORAGE REQUIREMENTS SEE BRACING TABLES

FULLY RE-INSULATE AROUND LRD TO DIAMETER OF PIPE INSULATION

PIPE ROLLER HANGER (TYPE 43, ANSI/MSS SP-58) PHD FIG 470 OR EQUAL

FOR PROPER SIZING WITH INSULATION, REFER TO MANUFACTURER'S RECOMMENDATIONS, "PIPE ROLLER SELECTION GUIDE"

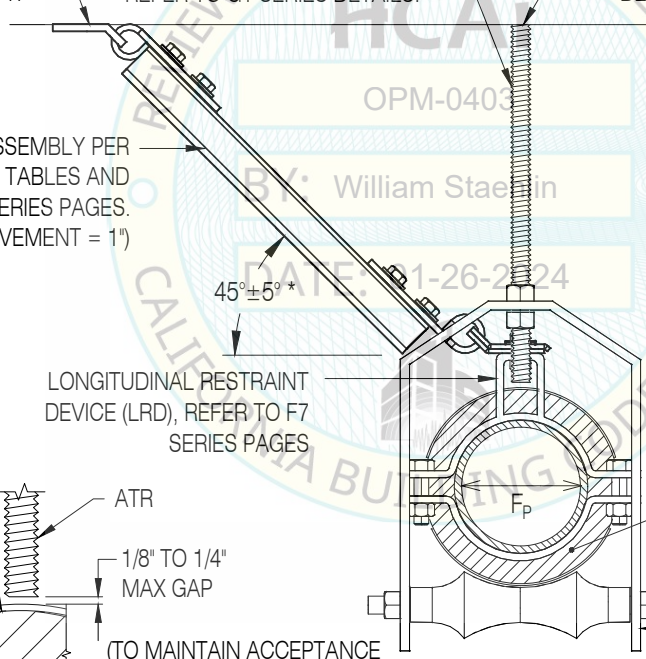

SECTION A-A

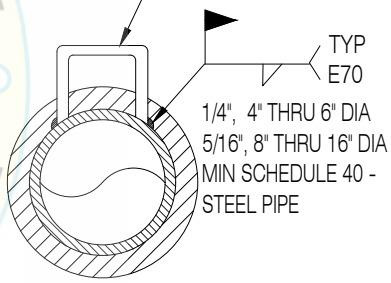

WELDED LUG ALTERNATE

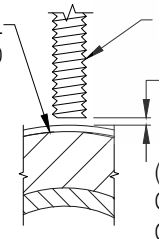

(TO MAINTAIN ACCEPTANCE OF SUPPORT TO RECEIVE COMPRESSIVE LOAD)

ATR @ TOP OF INSULATION

AXIAL PIPE MOVEMENT LIMITED TO 1 INCH MAX

OPM-0403
By: William Staehlin
DATE: 01-26-2024

ROLLER HUNG PIPE WITH CALCIUM SILICATE PIPE SUPPORT
1-WAY TRANSVERSE RIGID BRACING

* FOR OTHER ANGLES CONTACT ISAT TECHNICAL SUPPORT, DESIGN SUBJECT TO APPROVAL OF ENFORCEMENT AGENCY.

REGISTERED PROFESSIONAL ENGINEER MARCIN WASAZNIK S-6612 STRUCTURAL STATE OF CALIFORNIA

ISAT
A Division of Tomarco Contractor Specialties

International Seismic Application Technology
14848 Northam Street, La Mirada, CA 90638
877-999-4728 (Toll Free) 714-523-0845 (fax)
www.isatsb.com

Rev. 1
08/28/2023

Page
B1.12

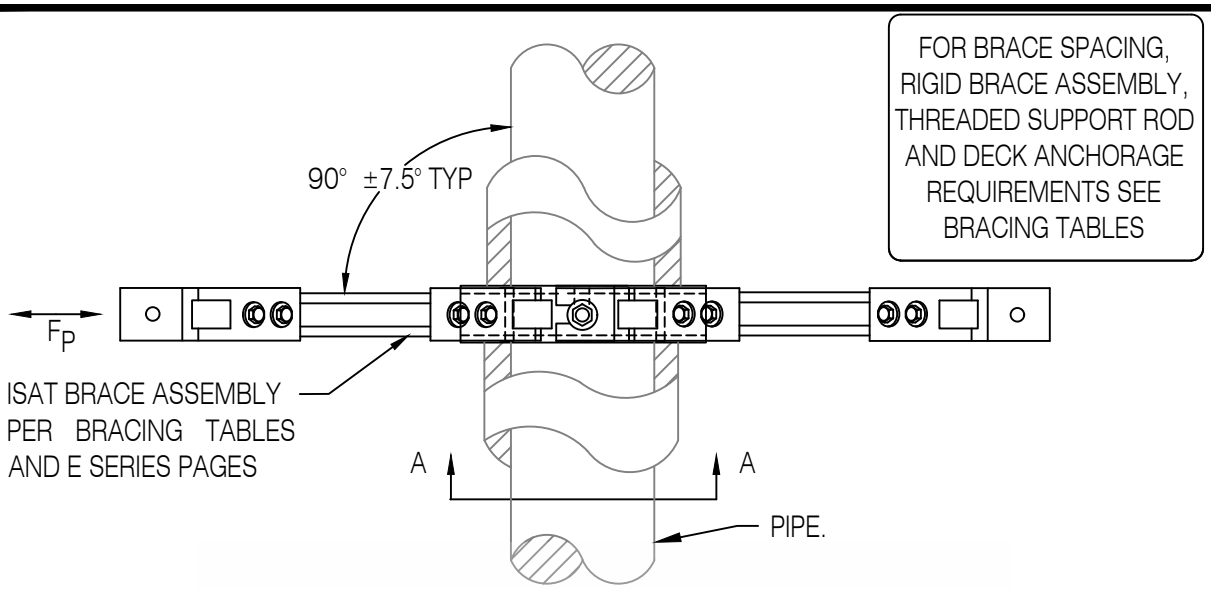

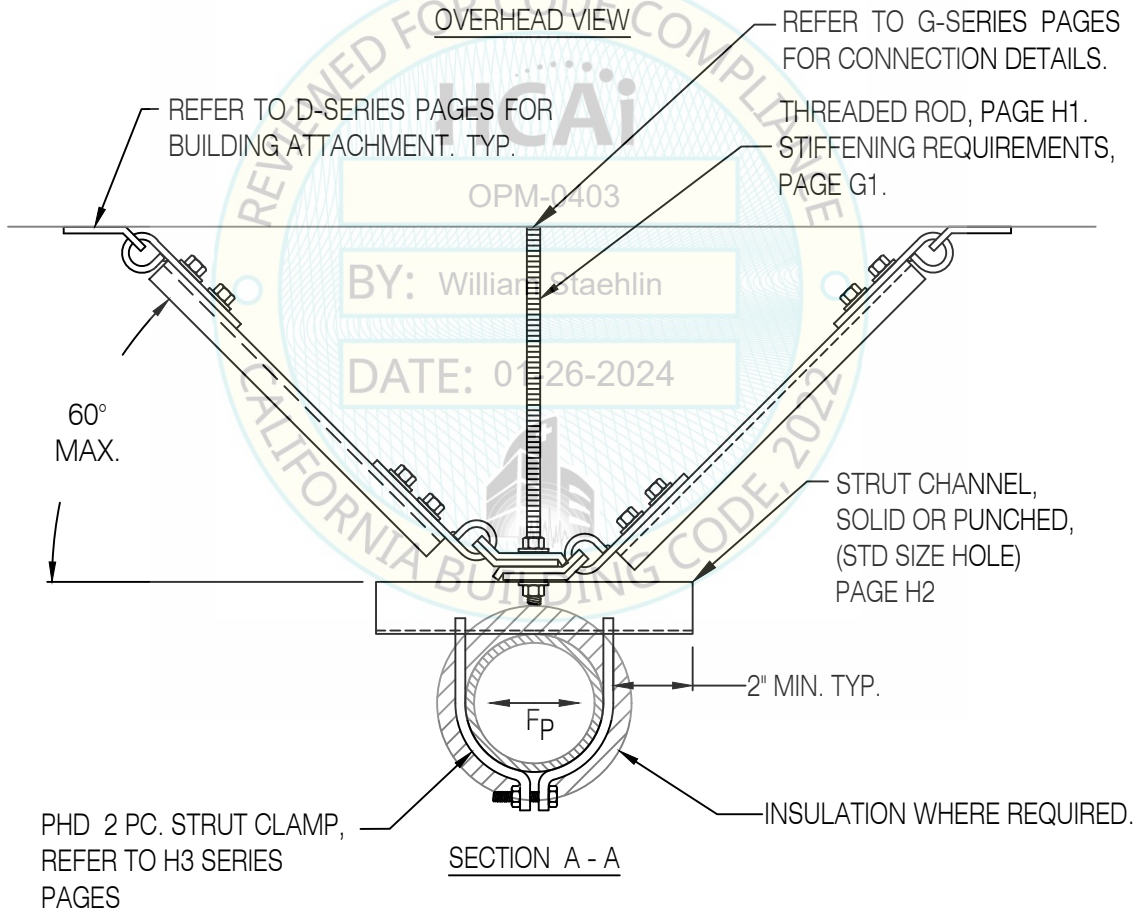

REVIEWED FOR CODE COMPLIANCE
HCAi
OPM-0403
BY: William Staehlin
DATE: 01-26-2024
CALIFORNIA BUILDING CODE, 2022

SINGLE HUNG PIPE, STRUT CLAMP
2-WAY TRANSVERSE, RIGID BRACING

REGISTERED PROFESSIONAL ENGINEER
MARCIN WASAZNIK
S-6612
STRUCTURAL
STATE OF CALIFORNIA

ISAT
A Division of Tomarco Contractor Specialties

International Seismic Application Technology
14848 Northam Street, La Mirada, CA 90638
877-999-4728 (Toll Free) 714-523-0845 (fax)
www.isatsb.com

Rev. 2
06/26/18

Page
B2.10

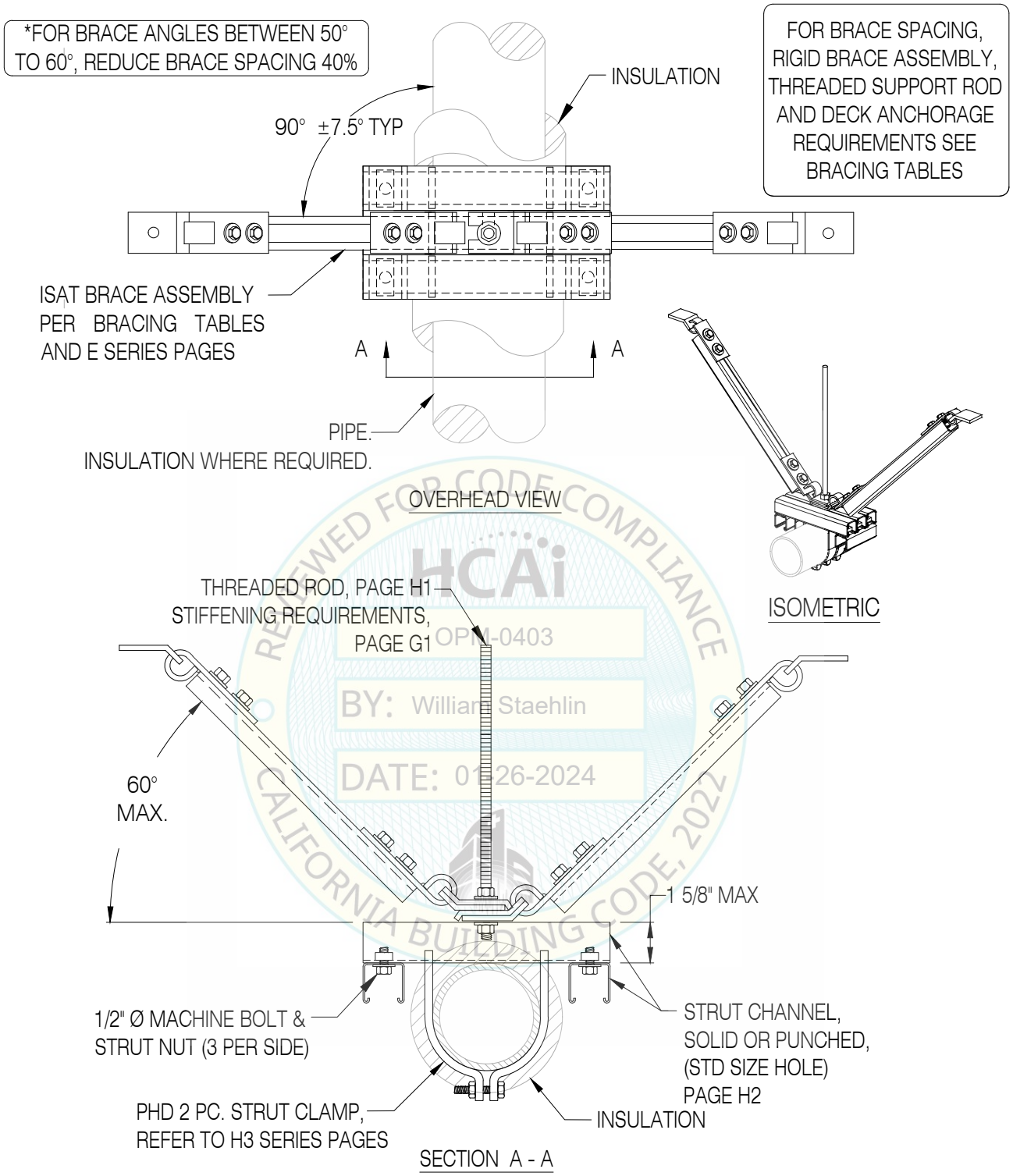

REVIEWED FOR CODE COMPLIANCE
HCAi
OPM-0403
BY: William Staehlin
DATE: 01-26-2024
CALIFORNIA BUILDING CODE, 2022

SINGLE HUNG PIPE, TRIPLE STRUT CLAMP
2-WAY TRANSVERSE, RIGID BRACING

REGISTERED PROFESSIONAL ENGINEER MARCIN WASAZNIK S-6612 STRUCTURAL STATE OF CALIFORNIA

ISAT
A Division of Tomarco Contractor Specialties
International Seismic Application Technology
14848 Northam Street, La Mirada, CA 90638
877-999-4728 (Toll Free) 714-523-0845 (fax)
www.isatsb.com

Rev. 0
06/26/18

Page
B2.11

FOR BRACE SPACING, RIGID BRACE ASSEMBLY, THREADED SUPPORT ROD AND DECK ANCHORAGE REQUIREMENTS SEE BRACING TABLES

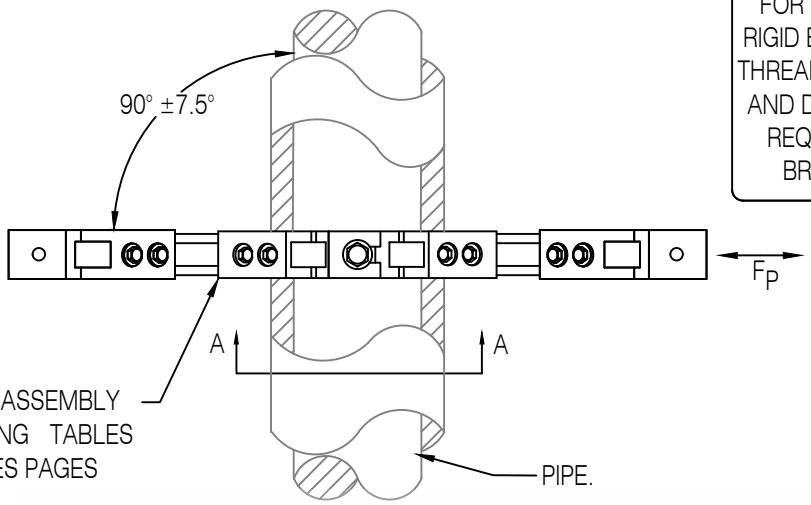

OVERHEAD VIEW

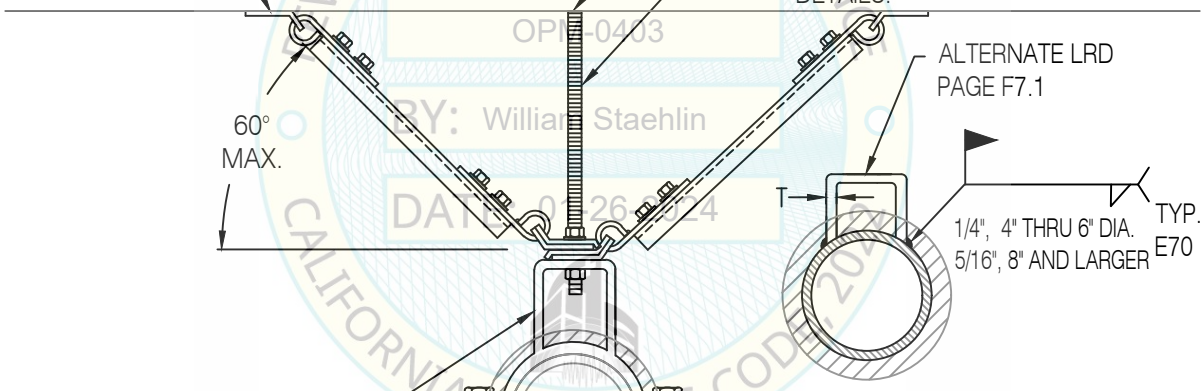

WELDED LUG ALTERNATE

SECTION A-A

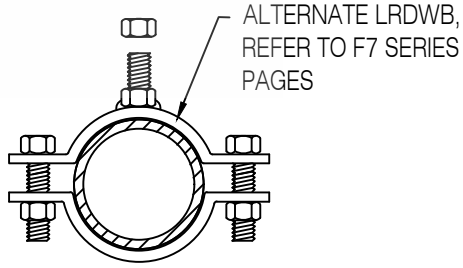

WELDED BOLT ALTERNATE

REVIEWED FOR CODE COMPLIANCE
HCAi
OPM-0403
BY: William Staehlin
DATE: 01-26-2024
CALIFORNIA BUILDING CODE, 2019

SINGLE HUNG PIPE, WITH LRD
2-WAY TRANSVERSE, RIGID BRACING

REGISTERED PROFESSIONAL ENGINEER MARCIN WASAZNIK S-6612 STRUCTURAL STATE OF CALIFORNIA

ISAT
A Division of Tomarco Contractor Specialties
International Seismic Application Technology
14848 Northam Street, La Mirada, CA 90638
877-999-4728 (Toll Free) 714-523-0845 (fax)
www.isatsb.com

Rev. 2
10/05/18

Page
B2.12

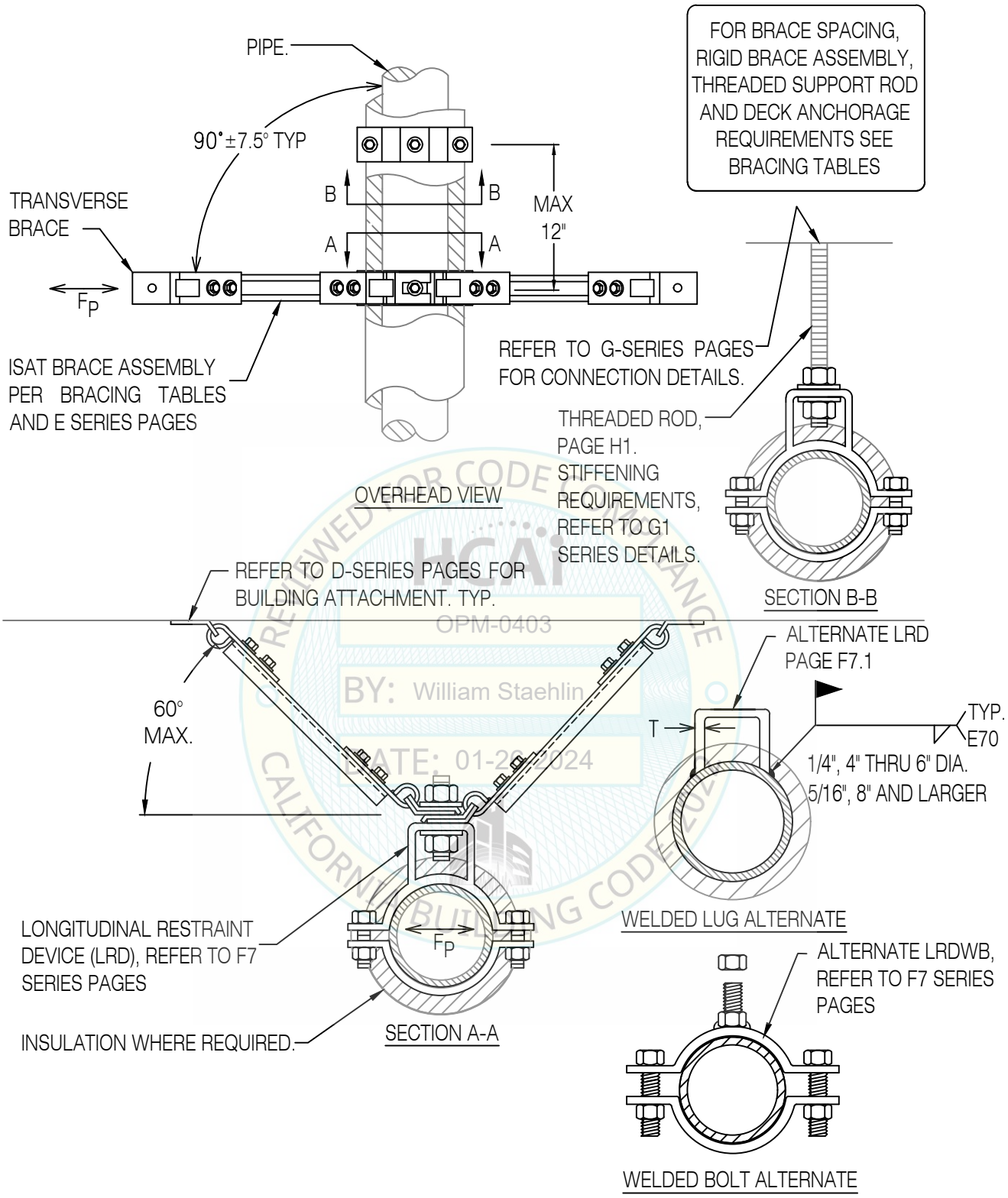

REVIEWED FOR CODE COMPLIANCE
HCAi
OPM-0403
BY: William Staehlin
DATE: 01-26-2024
CALIFORNIA BUILDING CODE 2022

SINGLE HUNG PIPE, WITH TWO LRDs
2-WAY TRANSVERSE, RIGID BRACING

REGISTERED PROFESSIONAL ENGINEER MARCIN WASAZNIK S-6612 STRUCTURAL STATE OF CALIFORNIA

ISAT
A Division of Tomarco Contractor Specialties
International Seismic Application Technology
14848 Northam Street, La Mirada, CA 90638
877-999-4728 (Toll Free) 714-523-0845 (fax)
www.isatsb.com

Rev. 1
10/05/18

Page
B2.13

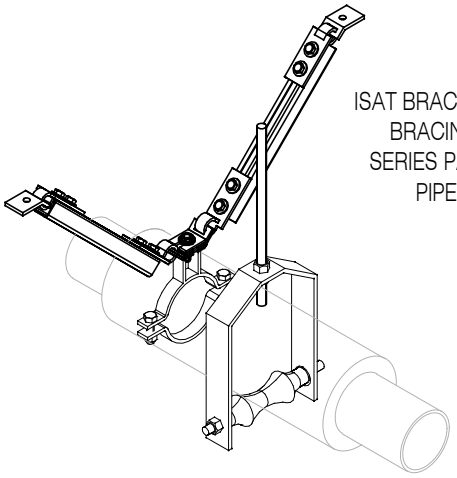

ISOMETRIC VIEW

**STEEL PIPE CONFORMING TO ASTM A53 TYPE E GR. B
COPPER PIPE TYPE K OR L

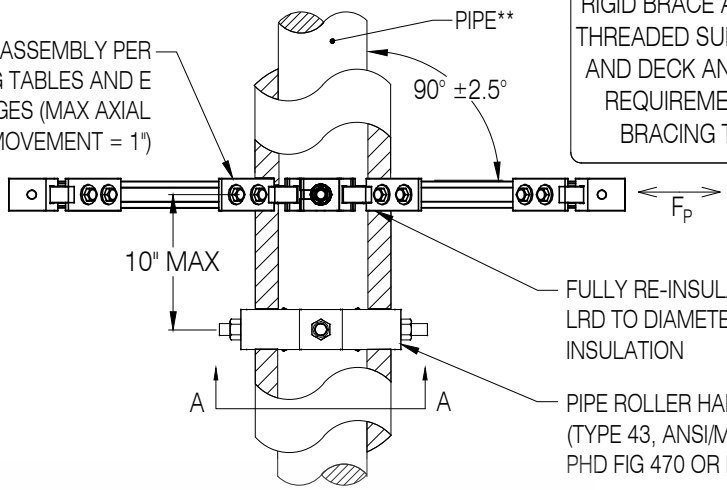

OVERHEAD VIEW

FOR BRACE SPACING, RIGID BRACE ASSEMBLY, THREADED SUPPORT ROD AND DECK ANCHORAGE REQUIREMENTS SEE BRACING TABLES

FOR PROPER SIZING WITH INSULATION, REFER TO MANUFACTURER'S RECOMMENDATIONS, "PIPE ROLLER SELECTION GUIDE"

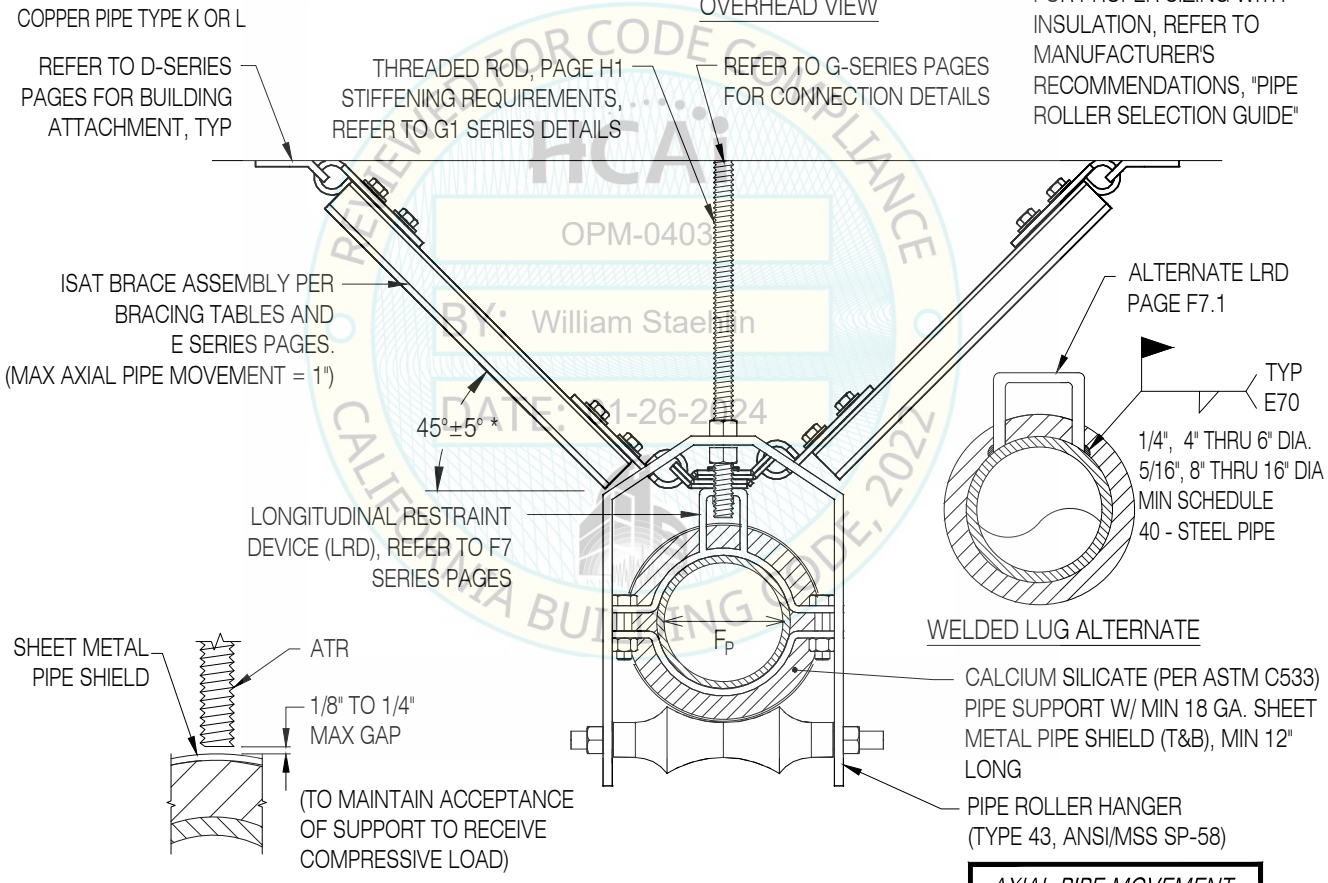

WELDED LUG ALTERNATE

ATR @ TOP OF INSULATION

SECTION A-A

AXIAL PIPE MOVEMENT LIMITED TO 1 INCH MAX

REVIEWED FOR CODE COMPLIANCE
HCAI
OPM-0403
By: William Staehlin
DATE: 01-26-2024
CALIFORNIA BUILDING CODE, 2022

ROLLER HUNG PIPE WITH CALCIUM SILICATE PIPE SUPPORT
2-WAY TRANSVERSE RIGID BRACING

* FOR OTHER ANGLES CONTACT ISAT TECHNICAL SUPPORT, DESIGN SUBJECT TO APPROVAL OF ENFORCEMENT AGENCY.

REGISTERED PROFESSIONAL ENGINEER MARCIN WASAZNIK S-6612 STRUCTURAL STATE OF CALIFORNIA

ISAT
A Division of Tomarco Contractor Specialties
International Seismic Application Technology
14848 Northam Street, La Mirada, CA 90638
877-999-4728 (Toll Free) 714-523-0845 (fax)
www.isatsb.com

Rev. 1
08/29/23

Page
B2.14

FOR BRACE SPACING, RIGID BRACE ASSEMBLY, THREADED SUPPORT ROD AND DECK ANCHORAGE REQUIREMENTS SEE BRACING TABLES

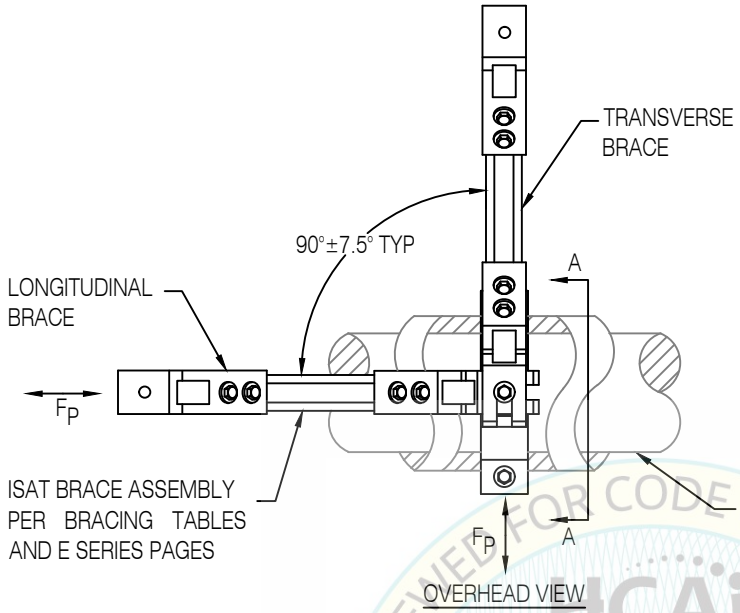

OVERHEAD VIEW

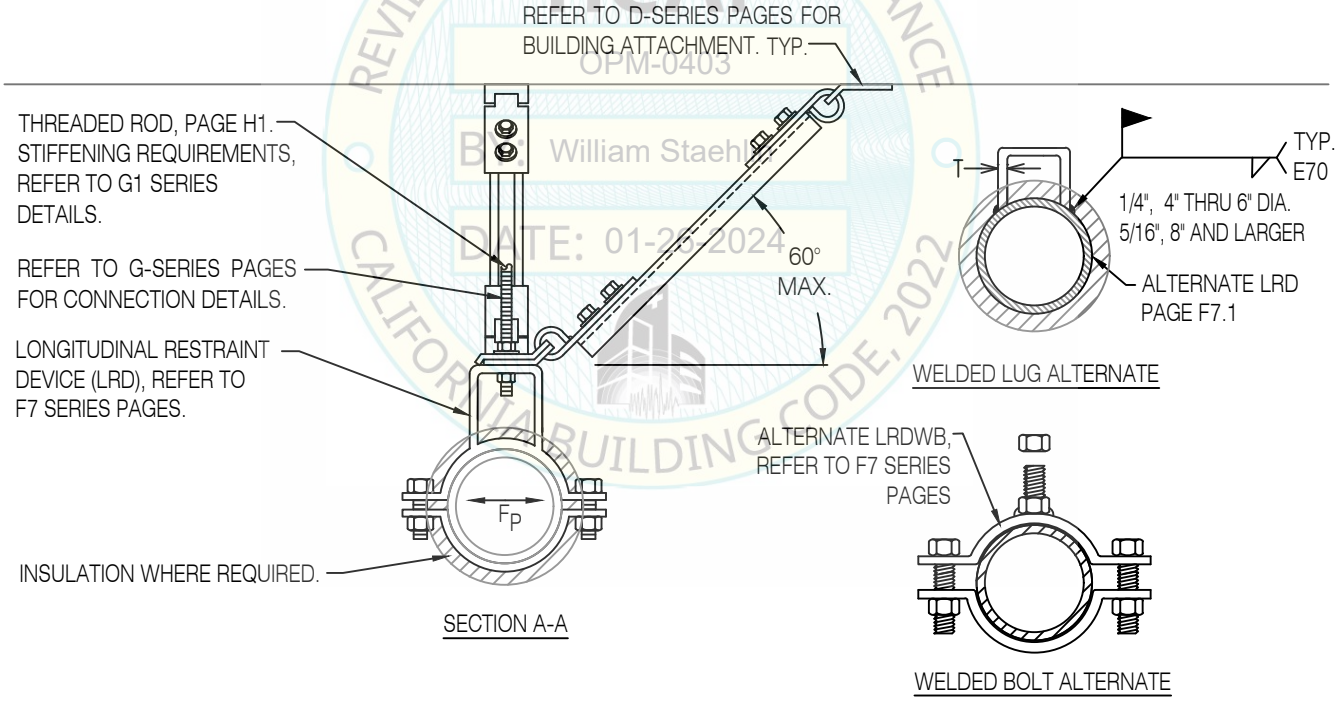

SECTION A-A

WELDED LUG ALTERNATE

WELDED BOLT ALTERNATE

REVIEWED FOR CODE COMPLIANCE
HCAi
OPM-0403
By: William Staehlin
DATE: 01-26-2024
CALIFORNIA BUILDING CODE, 2022

SINGLE HUNG PIPE, WITH LRD
2-WAY TRANSVERSE-LONGITUDINAL, RIGID BRACING

REGISTERED PROFESSIONAL ENGINEER
MARCIN WASAZNIK
S-6612
STRUCTURAL
STATE OF CALIFORNIA

ISAT
A Division of Tomarco Contractor Specialties

International Seismic Application Technology
14848 Northam Street, La Mirada, CA 90638
877-999-4728 (Toll Free) 714-523-0845 (fax)
www.isatsb.com

Rev. 2
10/05/18

Page
B3.0

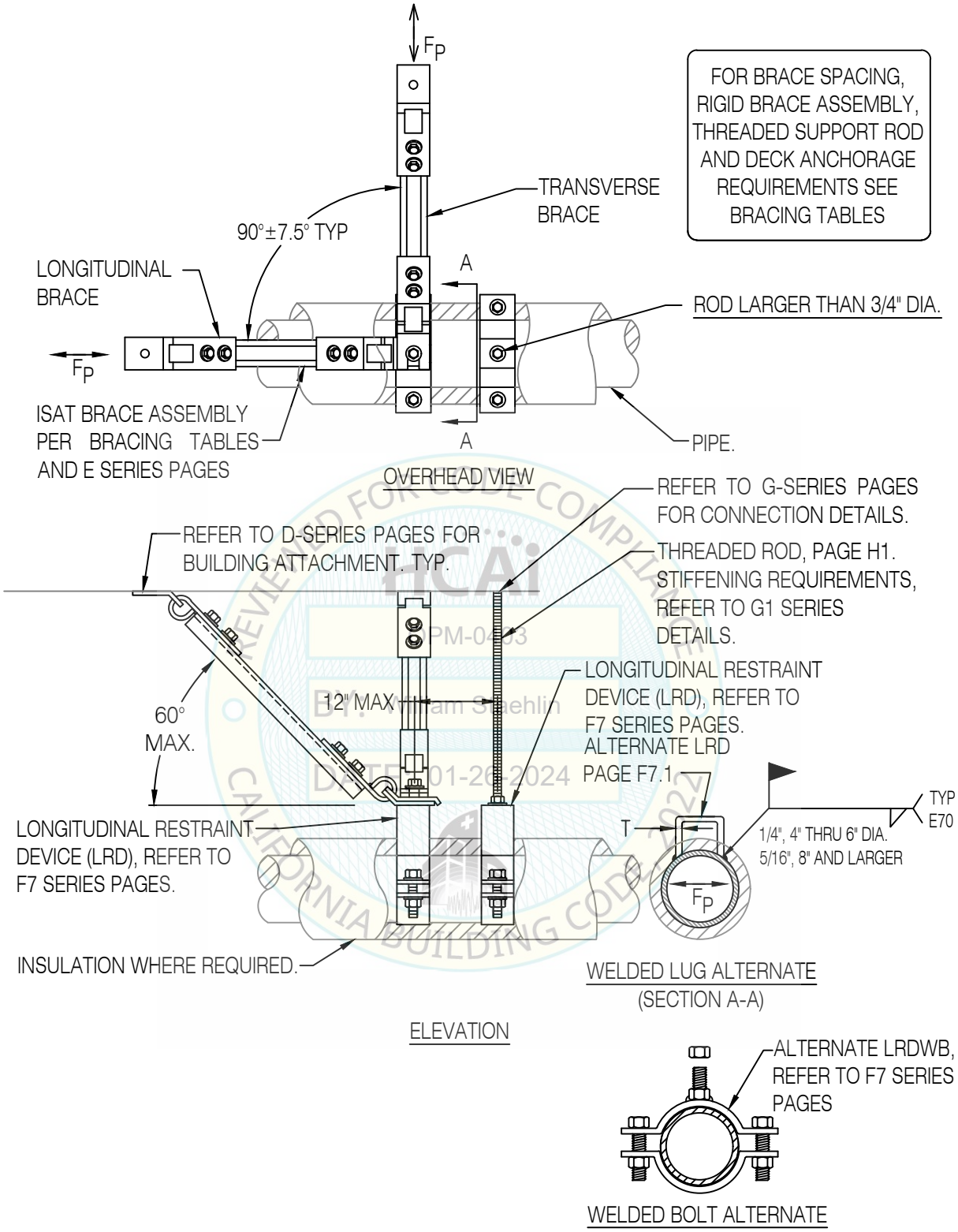

REVIEWED FOR CODE COMPLIANCE
ICAI
OPM-0403
BY: William Staehlin
DATE: 01-26-2024
CALIFORNIA BUILDING CODE 2022

SINGLE HUNG PIPE, WITH LRD
2-WAY TRANSVERSE-LONGITUDINAL, RIGID BRACING

REGISTERED PROFESSIONAL ENGINEER MARCIN WASAZNIK S-6612 STRUCTURAL STATE OF CALIFORNIA

ISAT
A Division of Tomarco Contractor Specialties
International Seismic Application Technology
14848 Northam Street, La Mirada, CA 90638
877-999-4728 (Toll Free) 714-523-0845 (fax)
www.isatsb.com

Rev. 2
10/05/18

Page
B3.1

FOR BRACE SPACING, RIGID BRACE ASSEMBLY, THREADED SUPPORT ROD AND DECK ANCHORAGE REQUIREMENTS SEE BRACING TABLES

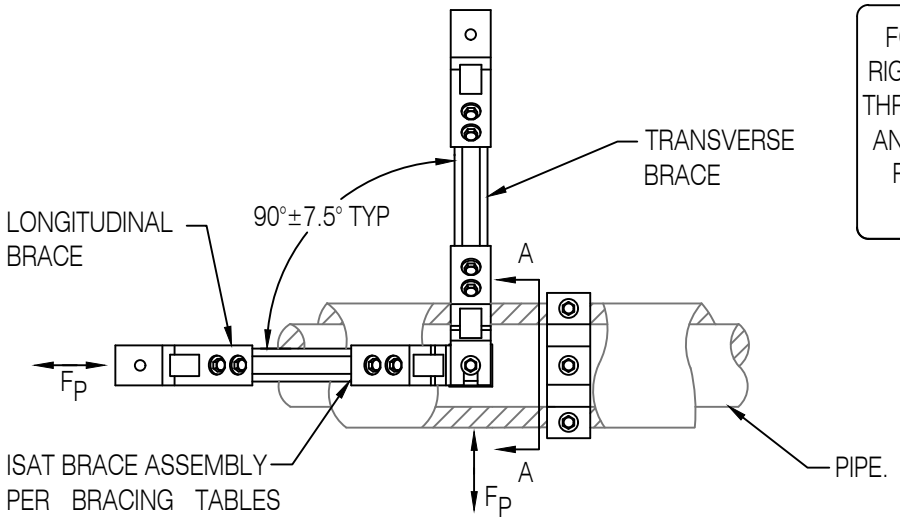

OVERHEAD VIEW

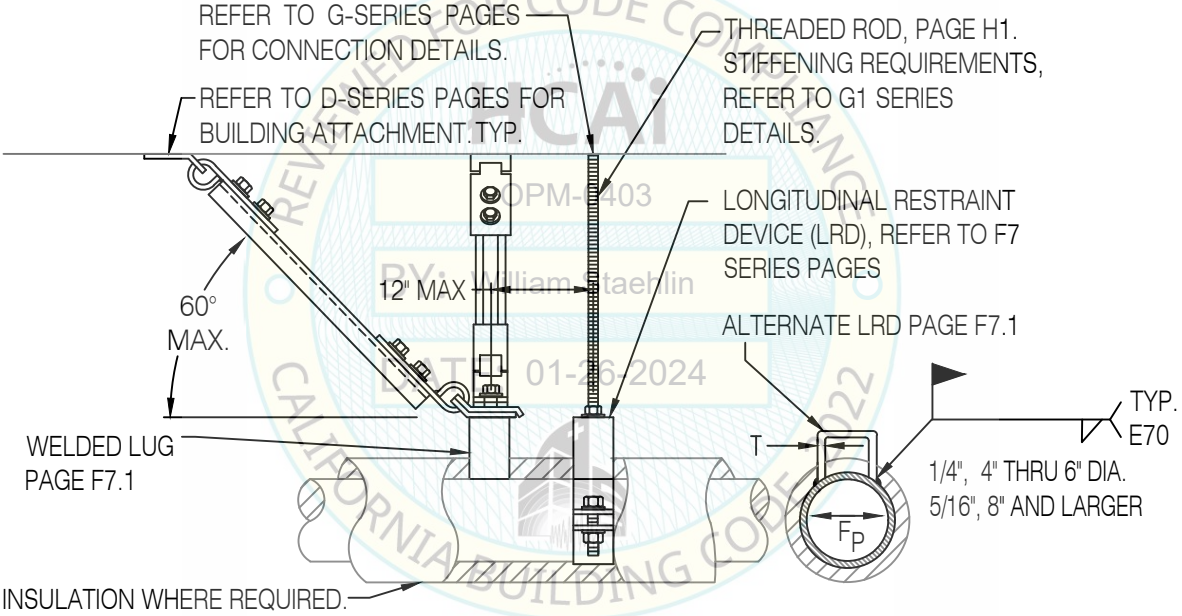

ELEVATION

SECTION A-A

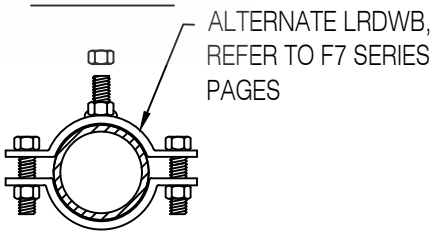

WELDED BOLT ALTERNATE

REVIEWED FOR CODE COMPLIANCE
OPM-0403
BY: William Staehlin
DATE: 01-26-2024
CALIFORNIA BUILDING CODE 2022

SINGLE HUNG PIPE, WITH LRD & WELDED LUG
2-WAY TRANSVERSE-LONGITUDINAL, RIGID BRACING

REGISTERED PROFESSIONAL ENGINEER MARCIN WASAZNIK S-6612 STRUCTURAL STATE OF CALIFORNIA

ISAT
A Division of Tomarco Contractor Specialties
International Seismic Application Technology
14848 Northam Street, La Mirada, CA 90638
877-999-4728 (Toll Free) 714-523-0845 (fax)
www.isatsb.com

Rev. 1
10/05/18

Page
B3.3

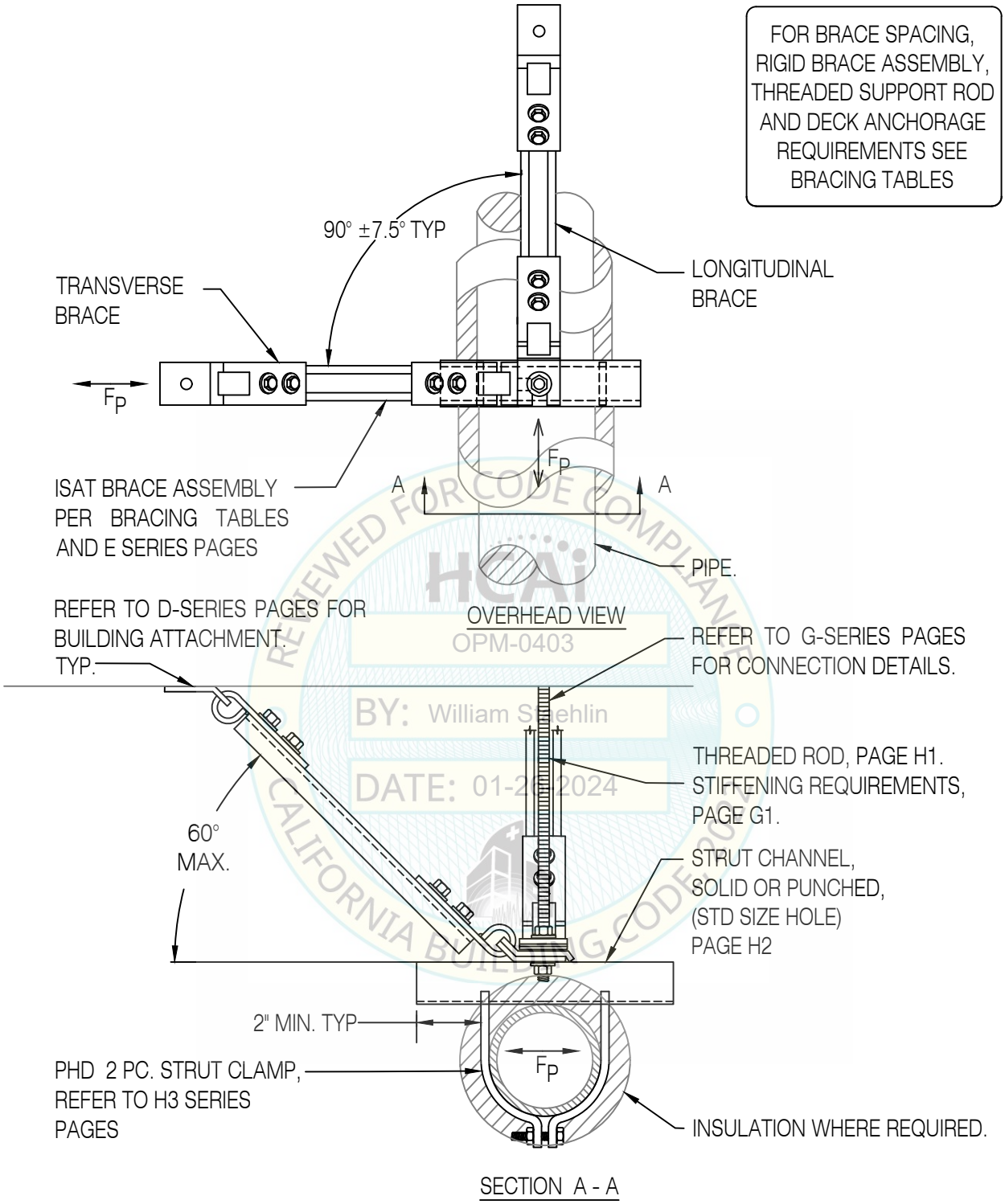

REVIEWED FOR CODE COMPLIANCE
HCAi
OPM-0403
BY: William Staehlin
DATE: 01-26-2024
CALIFORNIA BUILDING CODE

SINGLE HUNG PIPE, STRUT CLAMP
2-WAY TRANSVERSE LONGITUDINAL, RIGID BRACING

REGISTERED PROFESSIONAL ENGINEER MARCIN WASAZNIK S-6612 STRUCTURAL STATE OF CALIFORNIA

ISAT
A Division of Tomarco Contractor Specialties

International Seismic Application Technology
14848 Northam Street, La Mirada, CA 90638
877-999-4728 (Toll Free) 714-523-0845 (fax)
www.isatsb.com

Rev. 2
06/26/18

Page
B3.10

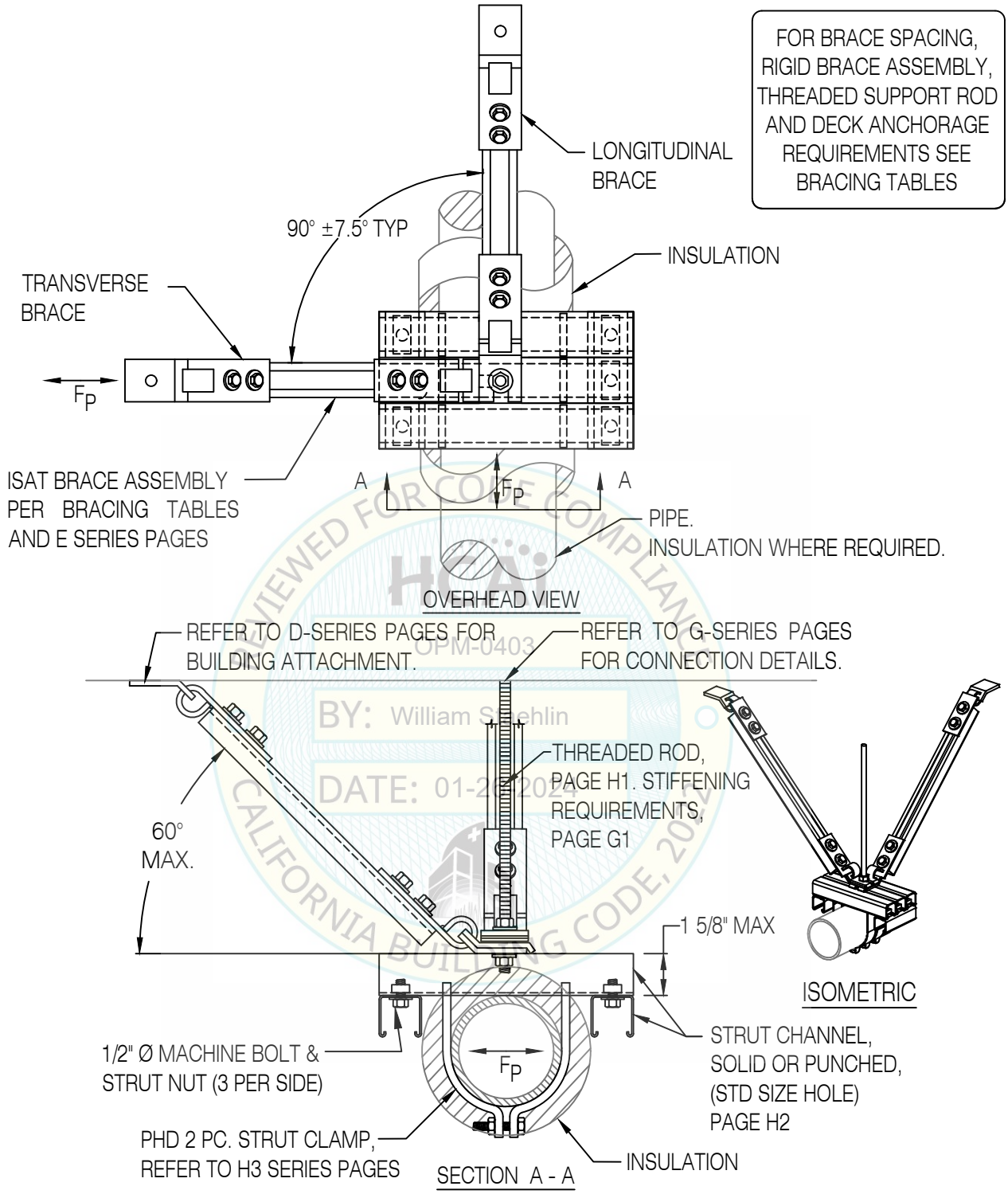

REVIEWED FOR CODE COMPLIANCE
OPM-0403
BY: William Staehlin
DATE: 01-26-2024
CALIFORNIA BUILDING CODE, 2019

SINGLE HUNG PIPE, TRIPLE STRUT CLAMP
2-WAY TRANSVERSE LONGITUDINAL, RIGID BRACING

REGISTERED PROFESSIONAL ENGINEER MARCIN WASAZNIK S-6612 STRUCTURAL STATE OF CALIFORNIA

ISAT
A Division of Tomarco Contractor Specialties
International Seismic Application Technology
14848 Northam Street, La Mirada, CA 90638
877-999-4728 (Toll Free) 714-523-0845 (fax)
www.isatsb.com

Rev. 0
06/26/18

Page
B3.11

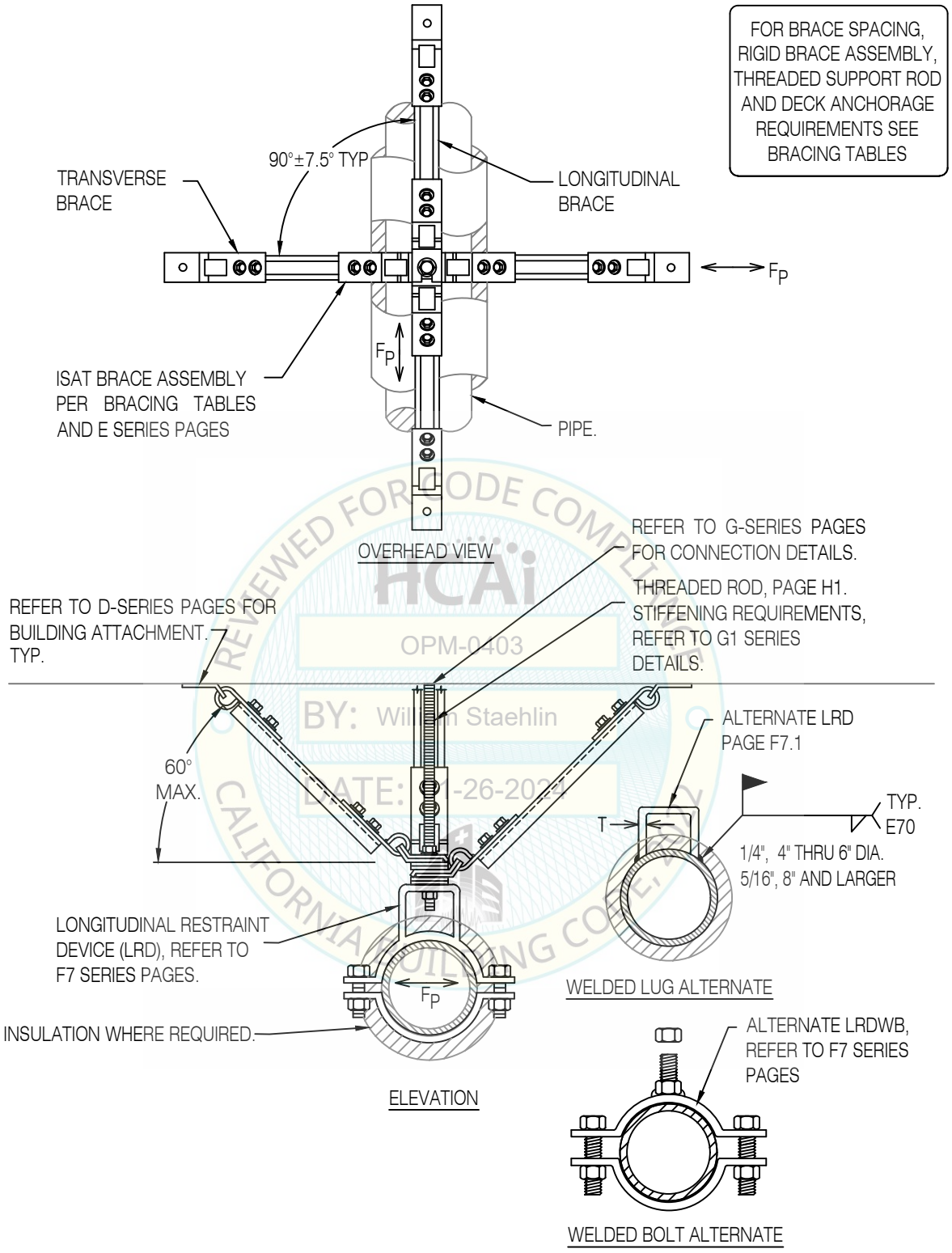

REVIEWED FOR CODE COMPLIANCE
HCAi
OPM-0403
BY: William Staehlin
DATE: 01-26-2024
CALIFORNIA BUILDING CODE, 2019

SINGLE HUNG PIPE, WITH LRD
4-WAY TRANSVERSE-LONGITUDINAL, RIGID BRACING

REGISTERED PROFESSIONAL ENGINEER MARCIN WASAZNIK S-6612 STRUCTURAL STATE OF CALIFORNIA

ISAT
A Division of Tomarco Contractor Specialties
International Seismic Application Technology
14848 Northam Street, La Mirada, CA 90638
877-999-4728 (Toll Free) 714-523-0845 (fax)
www.isatsb.com

Rev. 3
10/05/18

Page
B4.0

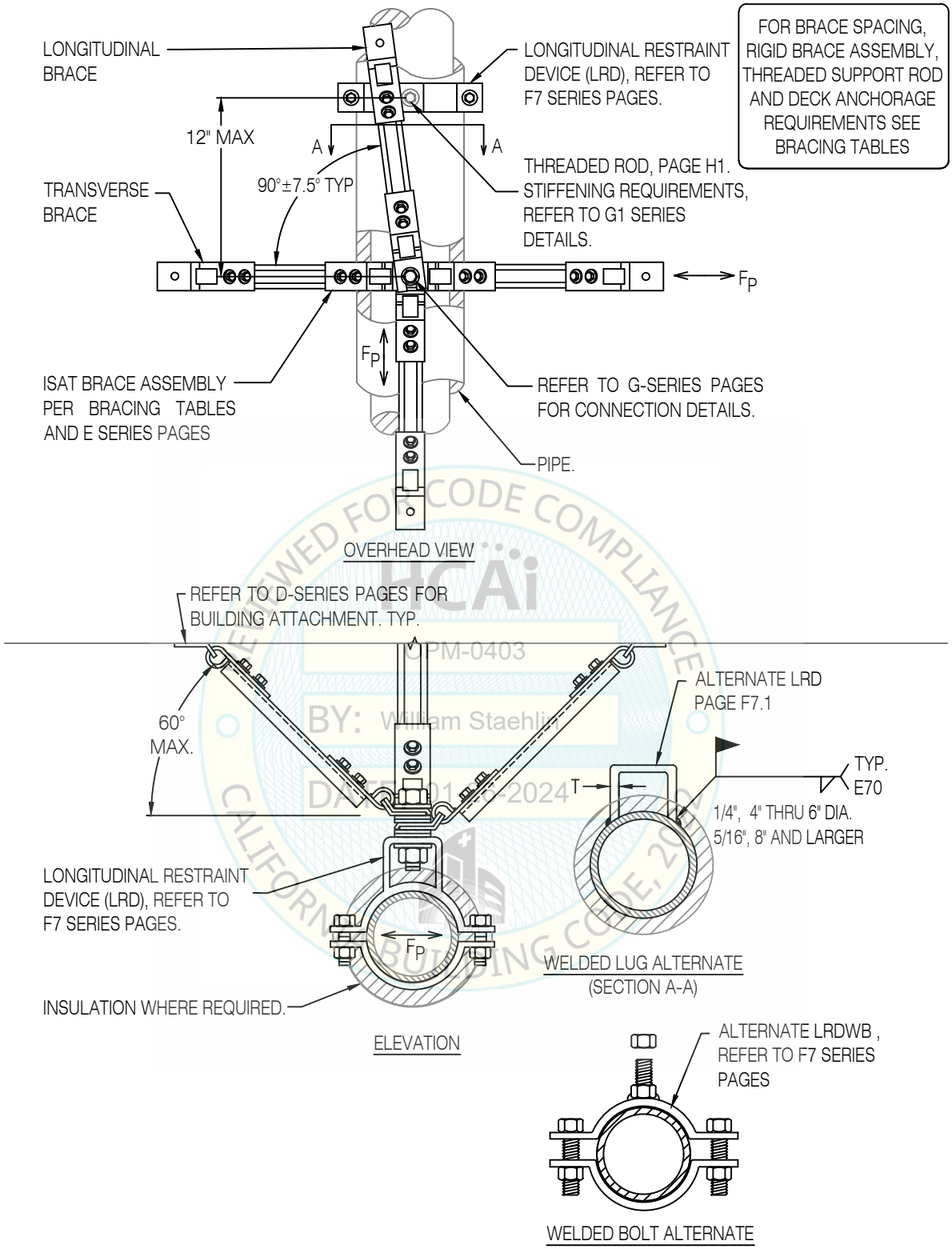

REVIEWED FOR CODE COMPLIANCE
HCAi
OPM-0403
BY: William Staehlin
DATE: 01/26/2024
CALIFORNIA BUILDING CODE, 2019

SINGLE HUNG PIPE, WITH LRD
4-WAY TRANSVERSE-LONGITUDINAL, RIGID BRACING

REGISTERED PROFESSIONAL ENGINEER MARCIN WASAZNIK S-6612 STRUCTURAL STATE OF CALIFORNIA

ISAT
A Division of Tomarco Contractor Specialties
International Seismic Application Technology
14848 Northam Street, La Mirada, CA 90638
877-999-4728 (Toll Free) 714-523-0845 (fax)
www.isatsb.com

Rev. 1
10/05/18

Page
B4.1

FOR BRACE SPACING, RIGID BRACE ASSEMBLY, THREADED SUPPORT ROD AND DECK ANCHORAGE REQUIREMENTS SEE BRACING TABLES

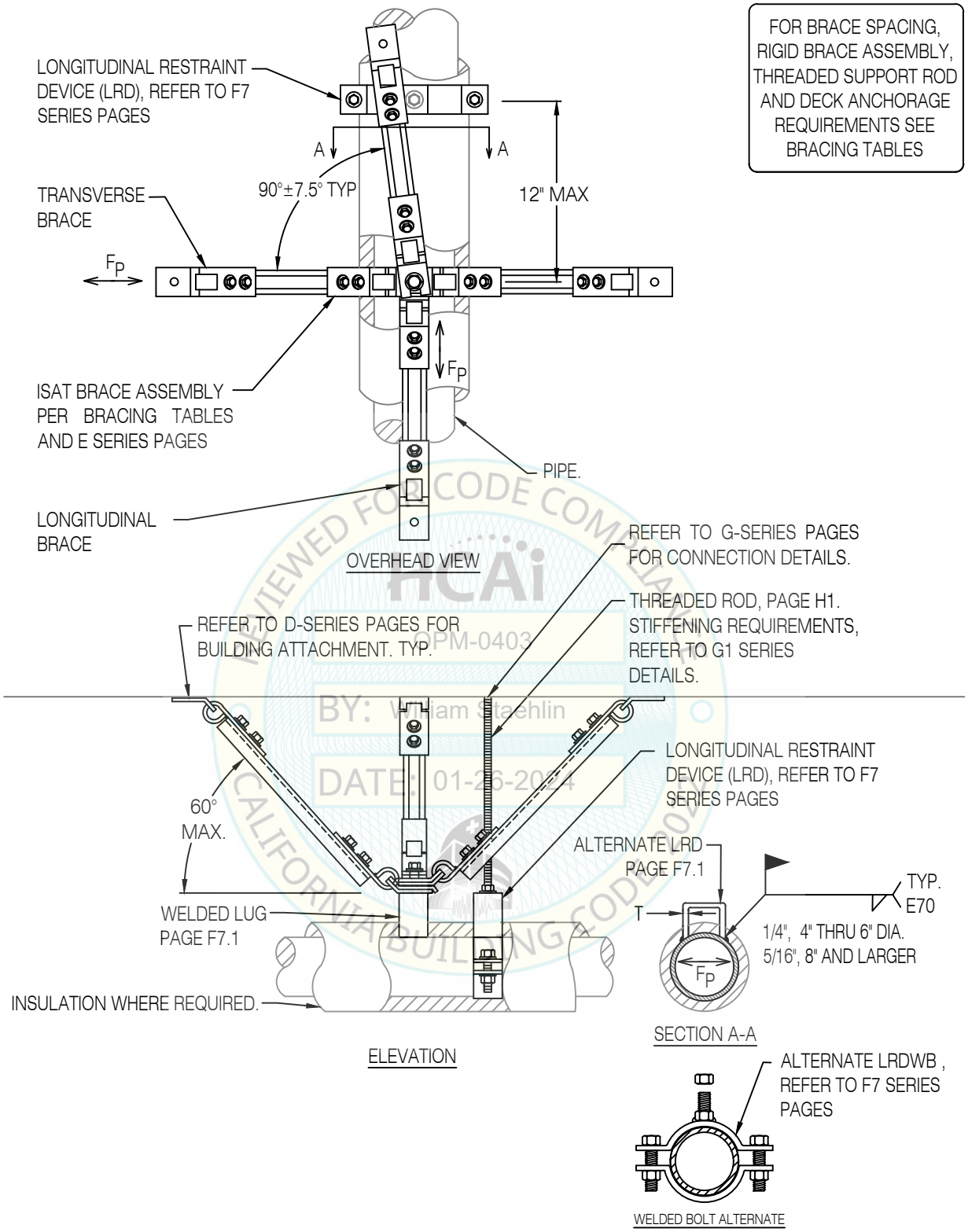

REVIEWED FOR CODE COMPLIANCE
HCAi
OPM-0403
BY: William Staehlin
DATE: 01-26-2024
CALIFORNIA BUILDING CODE

SINGLE HUNG PIPE, WITH LRD & WELDED LUG
4-WAY TRANSVERSE-LONGITUDINAL, RIGID BRACING

REGISTERED PROFESSIONAL ENGINEER
MARCIN WASAZNIK
S-6612
STRUCTURAL
STATE OF CALIFORNIA

ISAT
A Division of Tomarco Contractor Specialties

International Seismic Application Technology
14848 Northam Street, La Mirada, CA 90638
877-999-4728 (Toll Free) 714-523-0845 (fax)
www.isatsb.com

Rev. 1
10/05/18

Page
B4.3

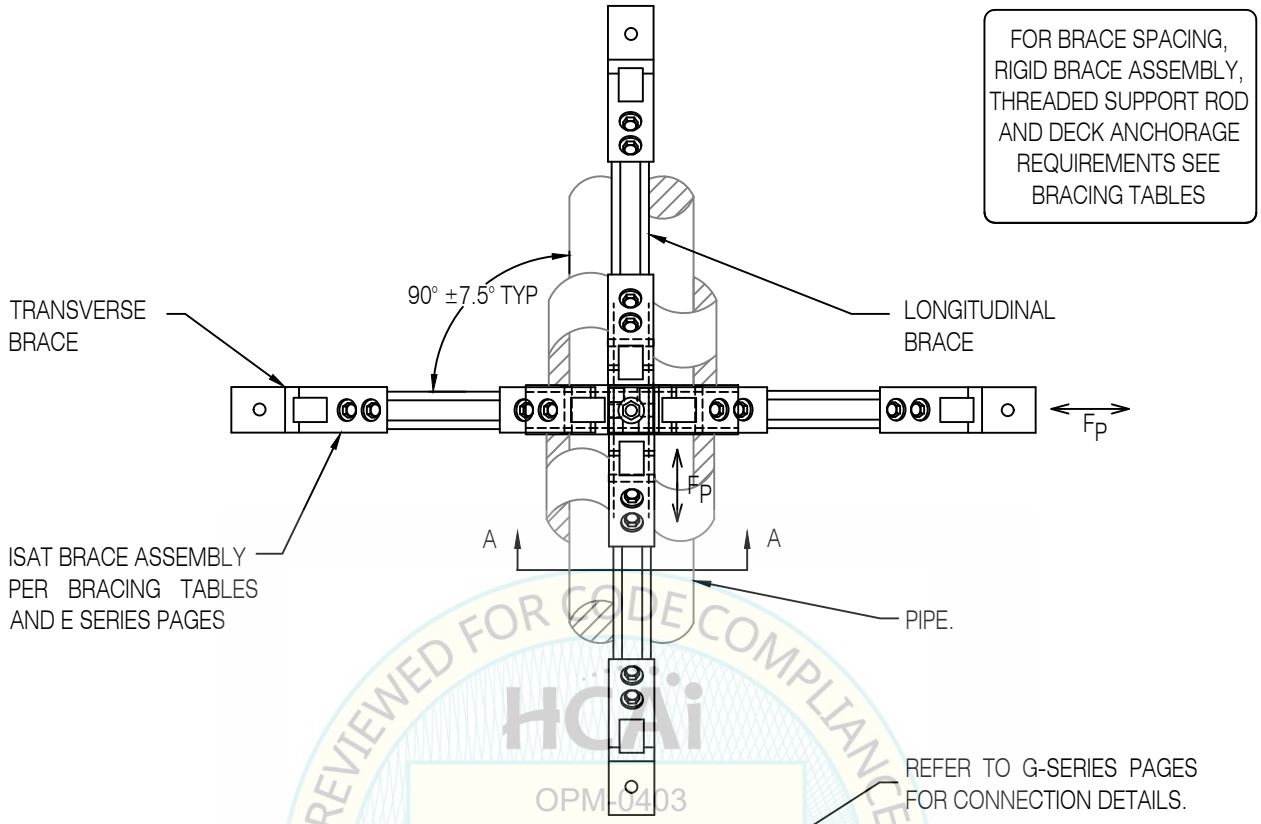

OVERHEAD VIEW

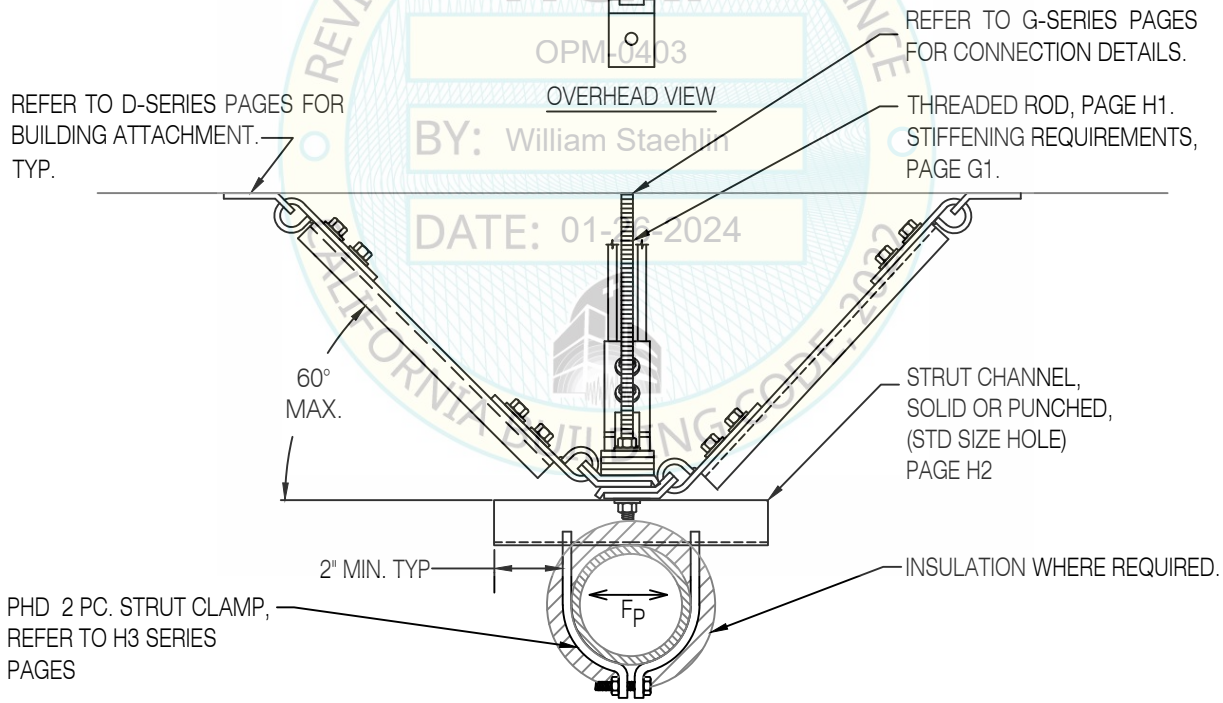

SECTION A - A

REVIEWED FOR CODE COMPLIANCE
HCAi
OPM-0403
BY: William Staehlin
DATE: 01-26-2024
CALIFORNIA BUILDING CODE 2022

SINGLE HUNG PIPE, STRUT CLAMP
4-WAY TRANSVERSE-LONGITUDINAL, RIGID BRACING

REGISTERED PROFESSIONAL ENGINEER MARCIN WASAZNIK S-6612 STRUCTURAL STATE OF CALIFORNIA

ISAT
A Division of Tomarco Contractor Specialties
International Seismic Application Technology
14848 Northam Street, La Mirada, CA 90638
877-999-4728 (Toll Free) 714-523-0845 (fax)
www.isatsb.com

Rev. 2
06/26/18

Page
B4.10

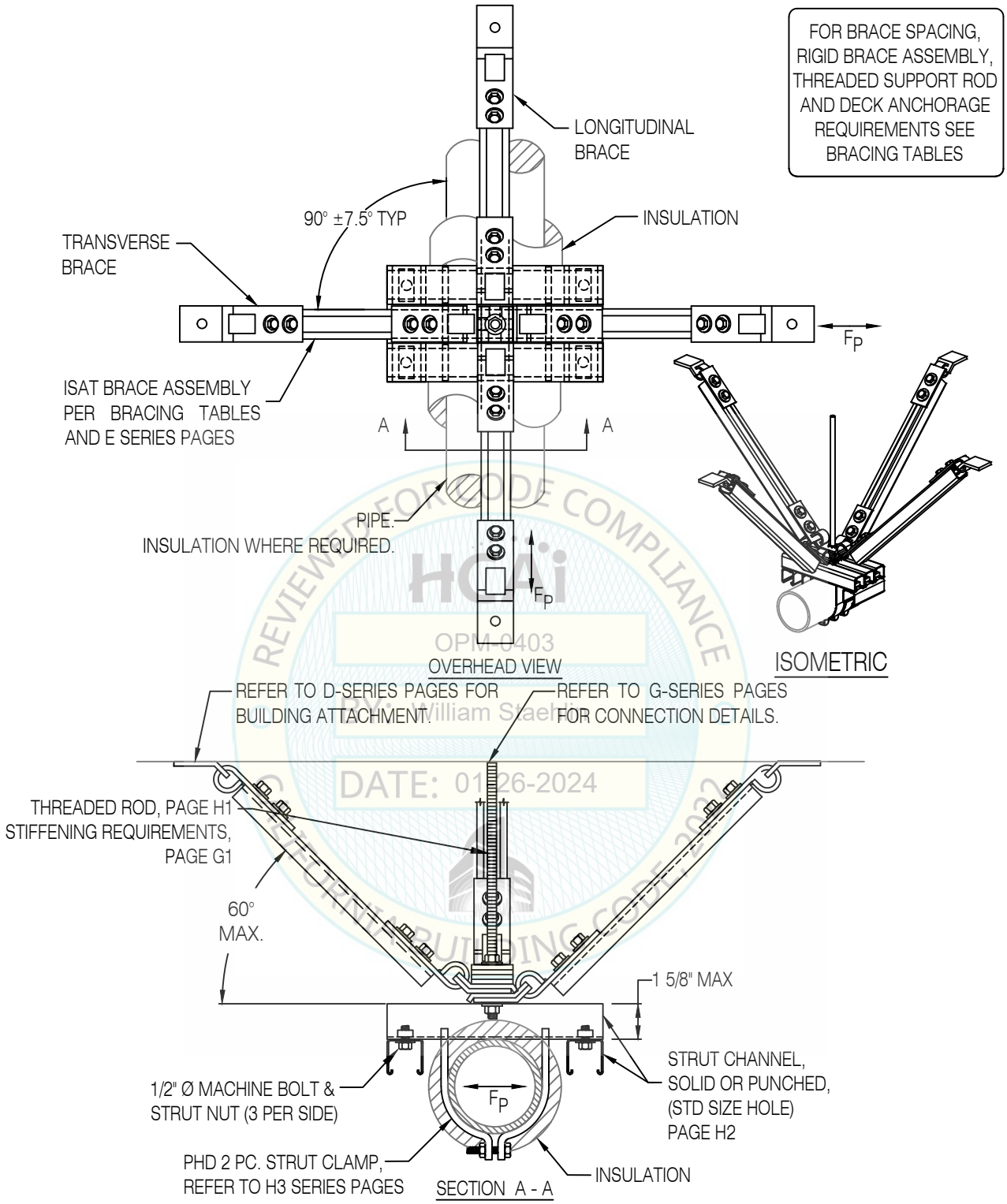

REVIEWED FOR CODE COMPLIANCE
HCAi
OPM-0403
BY: William Staehlin
DATE: 01-26-2024
CALIFORNIA BUILDING CODE 2022

SINGLE HUNG PIPE, TRIPLE STRUT CLAMP
4-WAY TRANSVERSE-LONGITUDINAL, RIGID BRACING

REGISTERED PROFESSIONAL ENGINEER MARCIN WASAZNIK S-6612 STRUCTURAL STATE OF CALIFORNIA

ISAT
A Division of Tomarco Contractor Specialties
International Seismic Application Technology
14848 Northam Street, La Mirada, CA 90638
877-999-4728 (Toll Free) 714-523-0845 (fax)
www.isatsb.com

Rev. 0
06/26/18

Page
B4.11

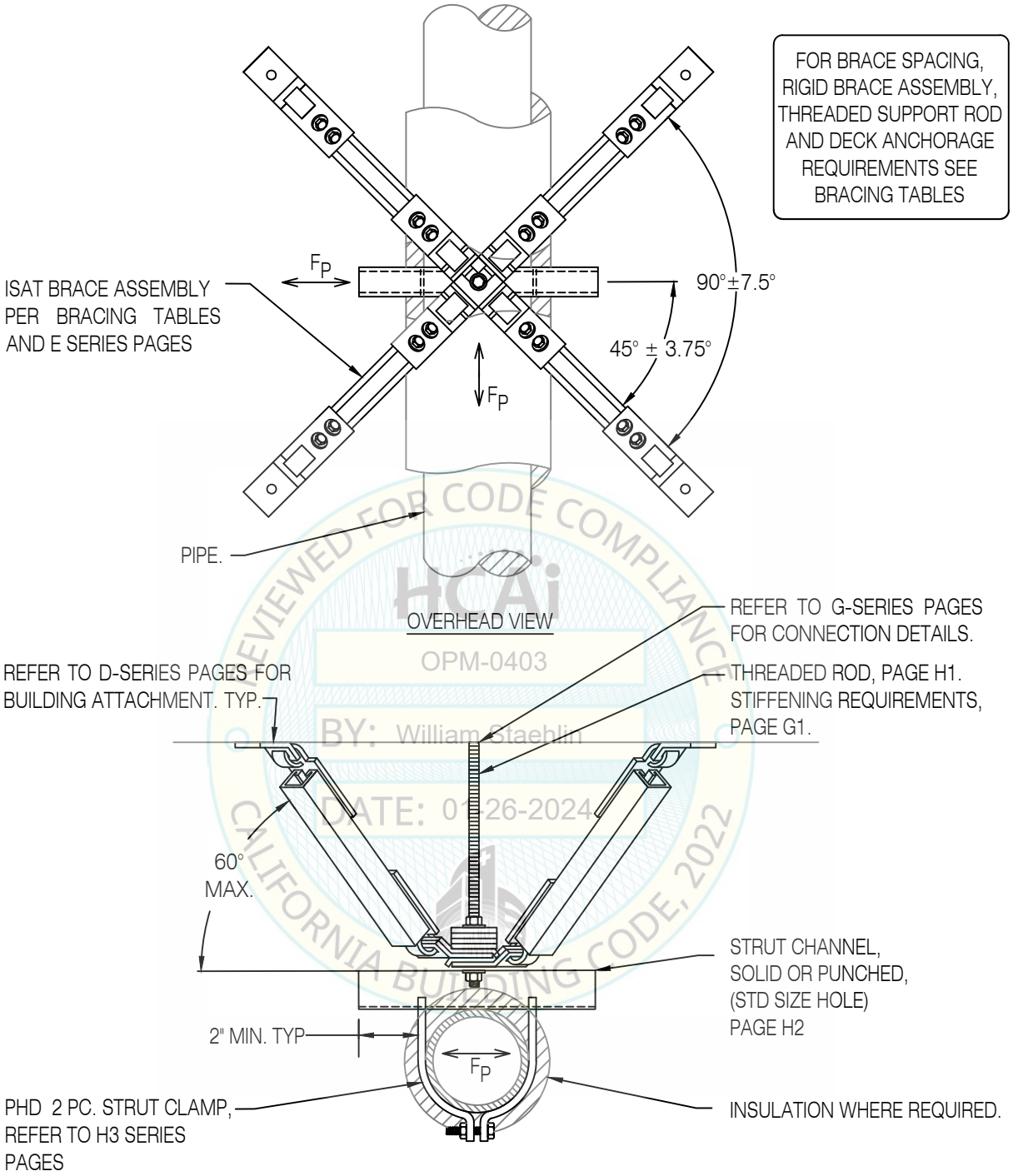

REVIEWED FOR CODE COMPLIANCE
HCAi
OPM-0403
BY: William Staehlin
DATE: 01-26-2024
CALIFORNIA BUILDING CODE, 2022

SINGLE HUNG PIPE, STRUT CLAMP
4-WAY SPLAYED, RIGID BRACING

REGISTERED PROFESSIONAL ENGINEER
MARCIN WASAZNIK
S-6612
STRUCTURAL
STATE OF CALIFORNIA

ISAT
A Division of Tomarco Contractor Specialties

International Seismic Application Technology
14848 Northam Street, La Mirada, CA 90638
877-999-4728 (Toll Free) 714-523-0845 (fax)
www.isatsb.com

Rev. 1
06/26/18

Page
B4.12

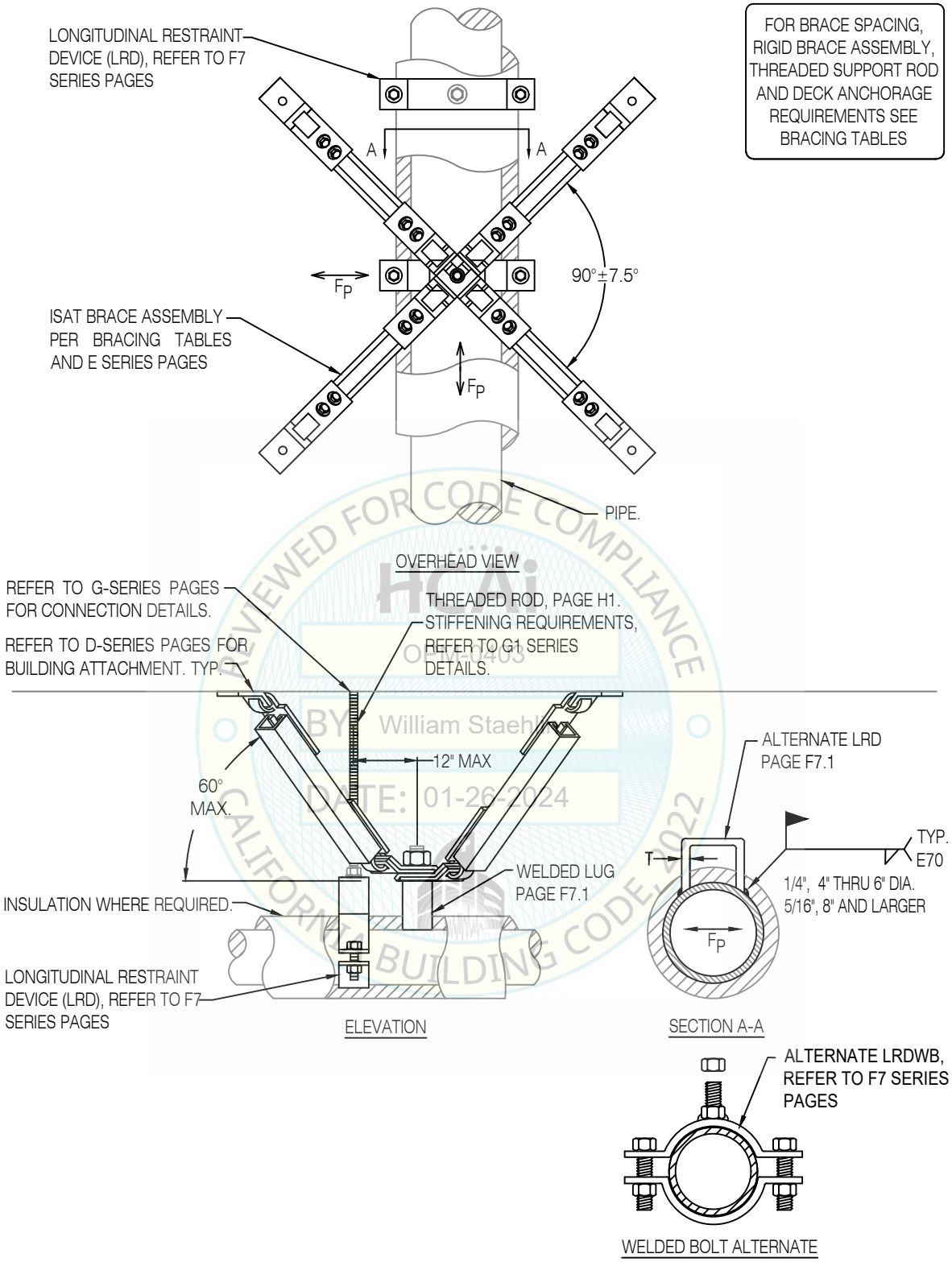

REVIEWED FOR CODE COMPLIANCE
HCAi
OPM-0403
BY: William Staehlin
DATE: 01-26-2024
CALIFORNIA BUILDING CODE 2022

SINGLE HUNG PIPE, WITH LRD & WELDED LUG
4-WAY SPLAYED, RIGID BRACING

REGISTERED PROFESSIONAL ENGINEER
MARCIN WASAZNIK
S-6612
STRUCTURAL
STATE OF CALIFORNIA

ISAT
A Division of Tomarco Contractor Specialties

International Seismic Application Technology
14848 Northam Street, La Mirada, CA 90638
877-999-4728 (Toll Free) 714-523-0845 (fax)
www.isatsb.com

Rev. 1
10/05/18

Page
B4.13

FOR BRACE SPACING, RIGID BRACE ASSEMBLY, THREADED SUPPORT ROD AND DECK ANCHORAGE REQUIREMENTS SEE BRACING TABLES

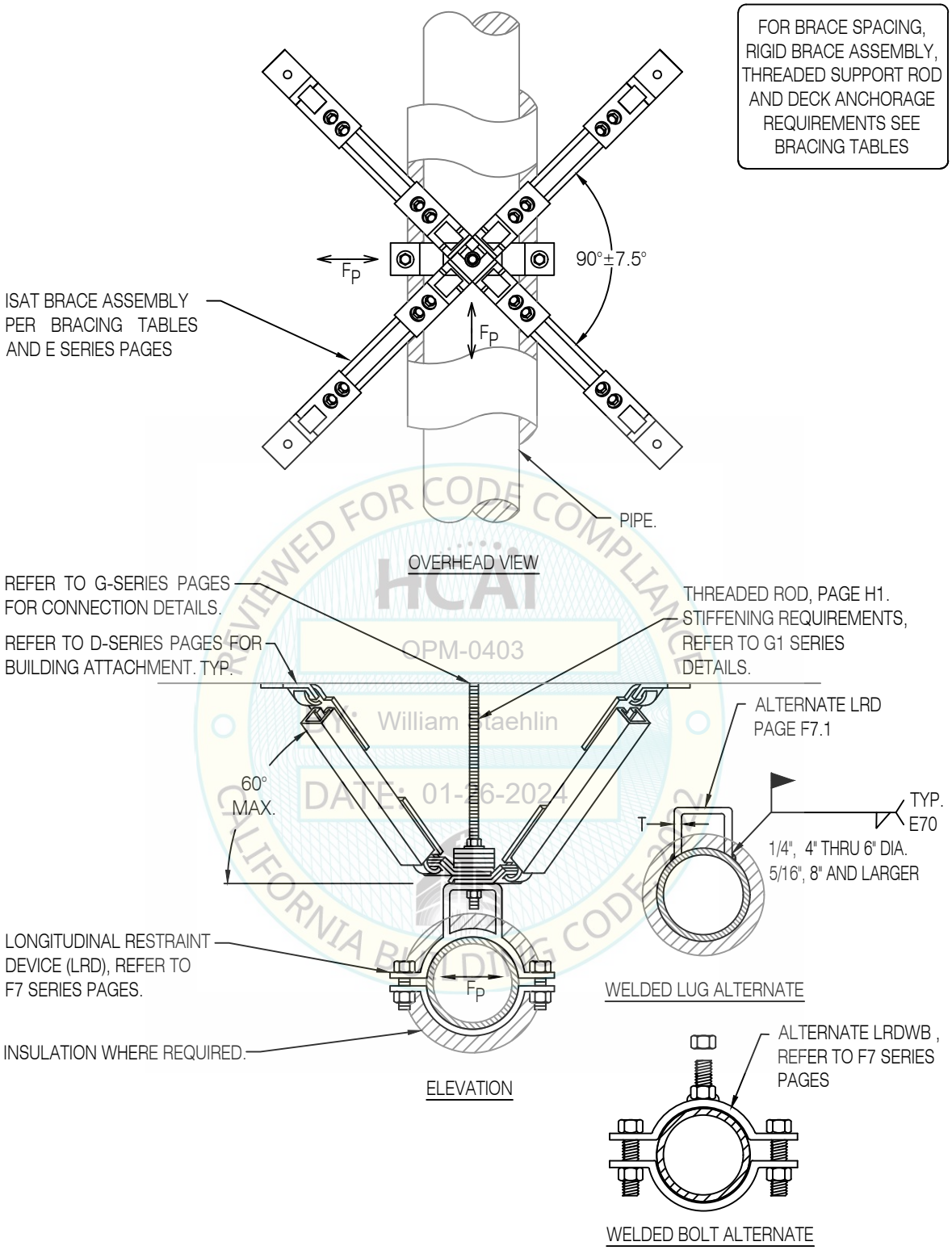

REVIEWED FOR CODE COMPLIANCE
HCAI
OPM-0403
Dr. William Staehlin
DATE: 01-26-2024
CALIFORNIA BUILDING CODE 2022

SINGLE HUNG PIPE, WITH LRD
4-WAY SPLAYED, RIGID BRACING

REGISTERED PROFESSIONAL ENGINEER MARCIN WASAZNIK S-6612 STRUCTURAL STATE OF CALIFORNIA

ISAT
A Division of Tomarco Contractor Specialties
International Seismic Application Technology
14848 Northam Street, La Mirada, CA 90638
877-999-4728 (Toll Free) 714-523-0845 (fax)
www.isatsb.com

Rev. 2
10/05/18

Page
B4.14

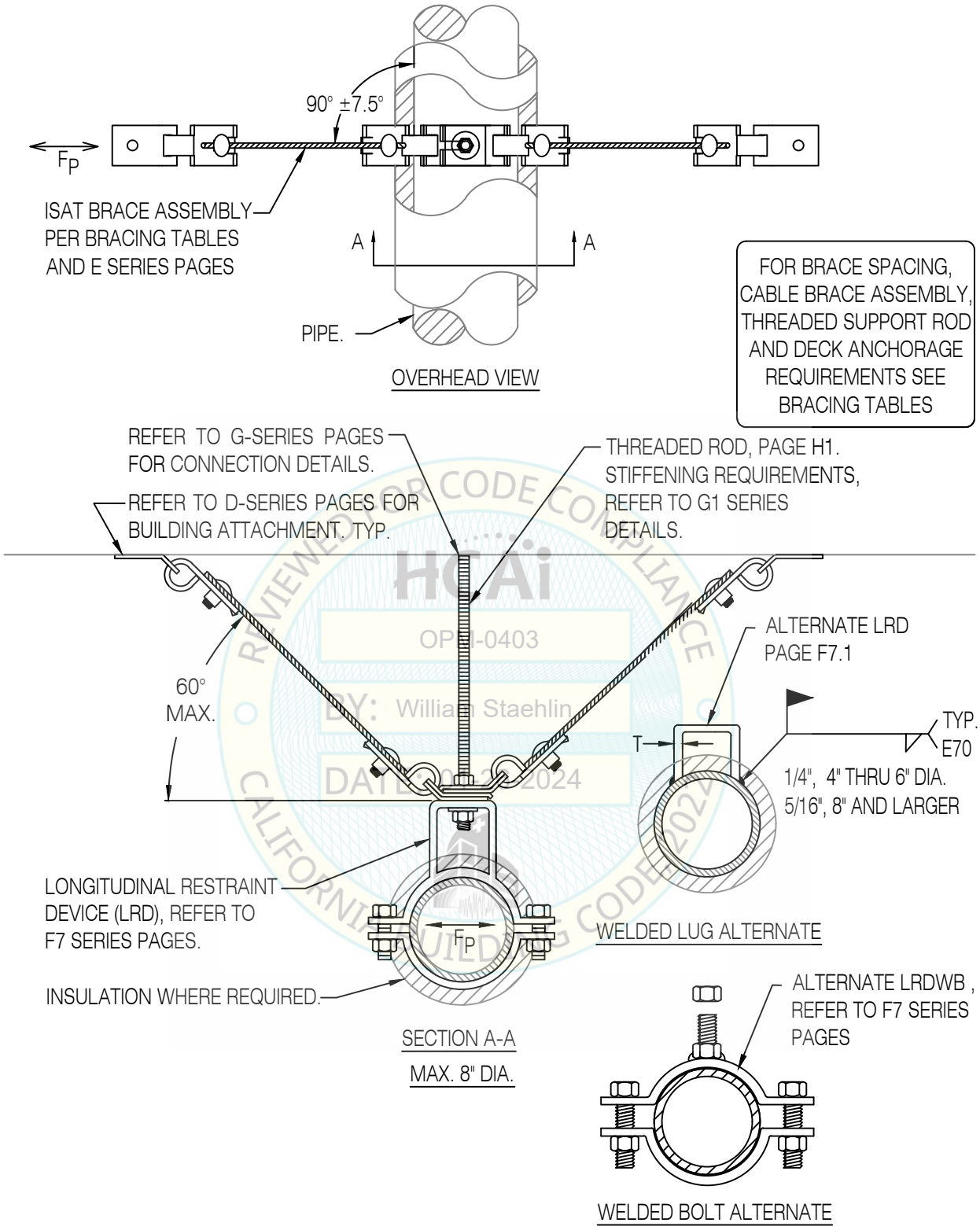

REVIEWED FOR CODE COMPLIANCE
HCAi
OPM-0403
BY: William Staehlin
DATE: 01/26/2024
CALIFORNIA BUILDING CODE 2022

SINGLE HUNG PIPE, WITH LRD
2-WAY TRANSVERSE, CABLE BRACING

REGISTERED PROFESSIONAL ENGINEER
MARCIN WASAZNIK
S-6612
STRUCTURAL
STATE OF CALIFORNIA

ISAT
A Division of Tomarco Contractor Specialties

International Seismic Application Technology
14848 Northam Street, La Mirada, CA 90638
877-999-4728 (Toll Free) 714-523-0845 (fax)
www.isatsb.com

Rev. 1
10/05/18

Page
B6.4

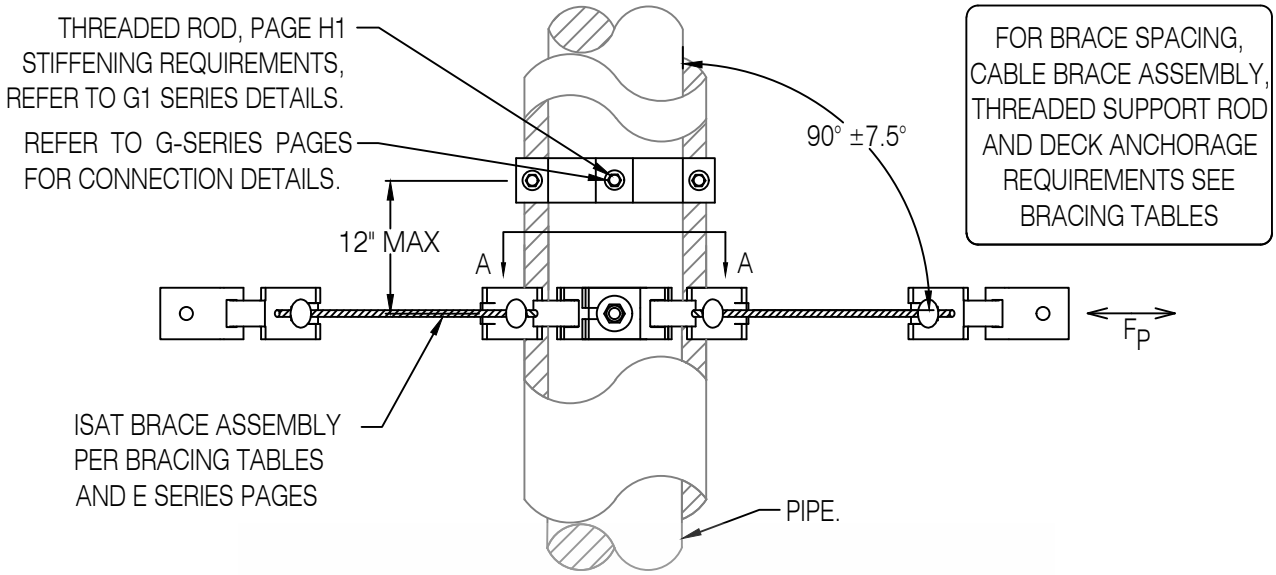

OVERHEAD VIEW

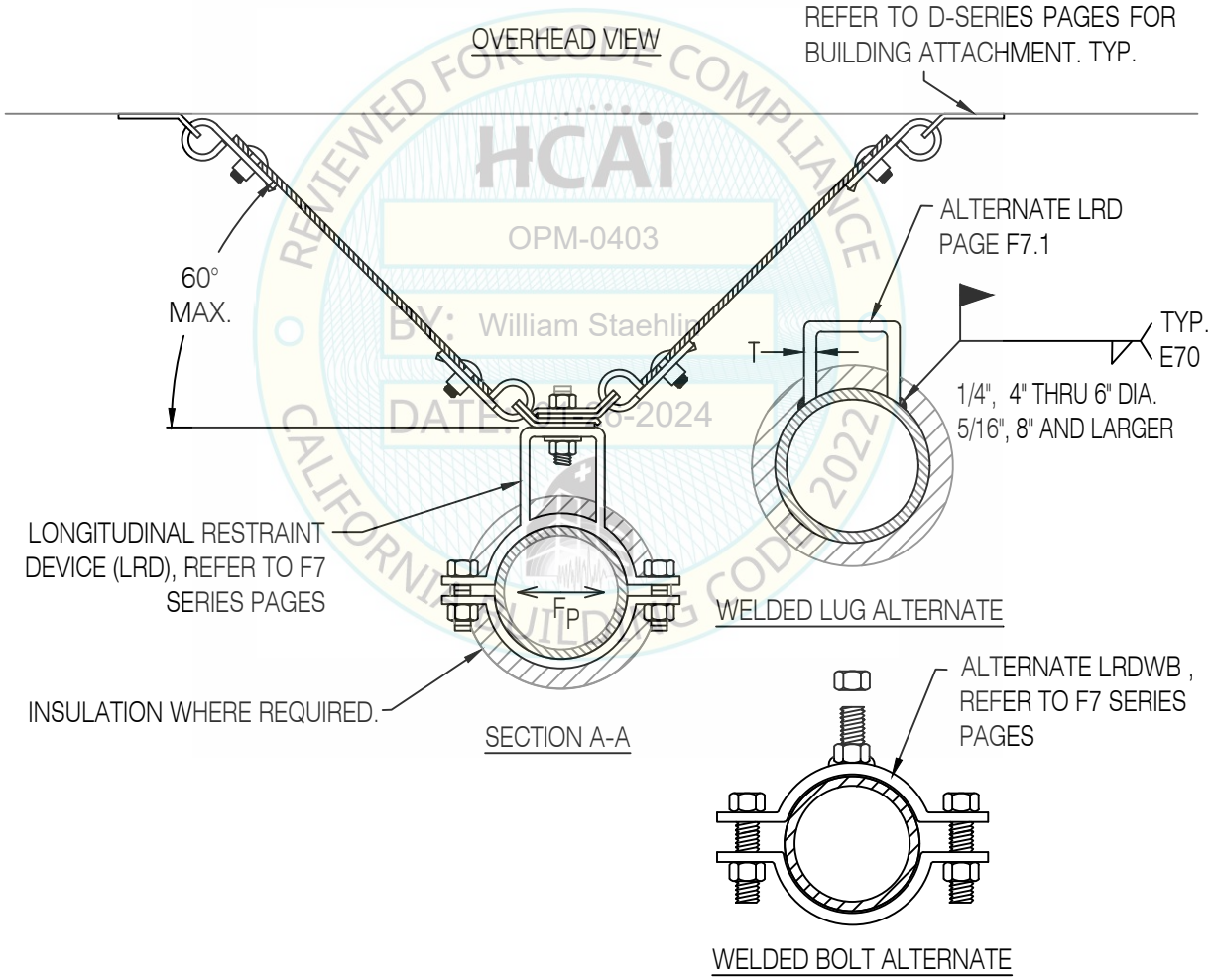

WELDED LUG ALTERNATE

SECTION A-A

WELDED BOLT ALTERNATE

REVIEWED FOR CODE COMPLIANCE
HCAi
OPM-0403
BY: William Staehlin
DATE: 1-26-2024
CALIFORNIA BUILDING CODE 2022

SINGLE HUNG PIPE, WITH TWO LRDs
2-WAY TRANSVERSE, CABLE BRACING

REGISTERED PROFESSIONAL ENGINEER
MARCIN WASAZNIK
S-6612
STRUCTURAL
STATE OF CALIFORNIA

ISAT
A Division of Tomarco Contractor Specialties

International Seismic Application Technology
14848 Northam Street, La Mirada, CA 90638
877-999-4728 (Toll Free) 714-523-0845 (fax)
www.isatsb.com

Rev. 1
10/05/18

Page
B6.5

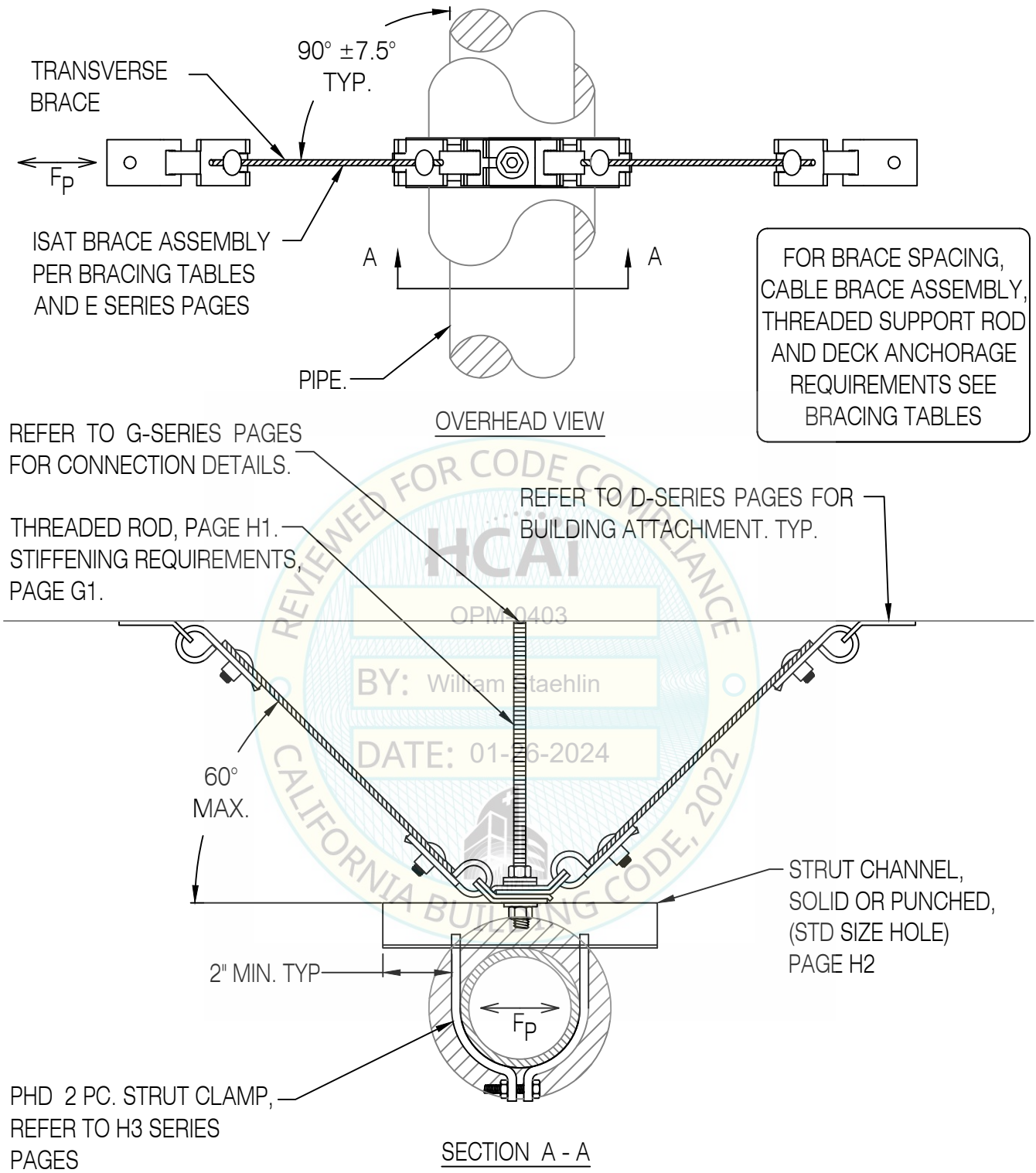

REVIEWED FOR CODE COMPLIANCE
HCAI
OPM-0403
BY: William Staehlin
DATE: 01-26-2024
CALIFORNIA BUILDING CODE, 2022

SINGLE HUNG PIPE, STRUT CLAMP
2-WAY TRANSVERSE, CABLE BRACING

REGISTERED PROFESSIONAL ENGINEER
MARCIN WASAZNIK
S-6612
STRUCTURAL
STATE OF CALIFORNIA

ISAT
A Division of Tomarco Contractor Specialties

International Seismic Application Technology
14848 Northam Street, La Mirada, CA 90638
877-999-4728 (Toll Free) 714-523-0845 (fax)
www.isatsb.com

Rev. 0
06/26/18

Page
B6.10

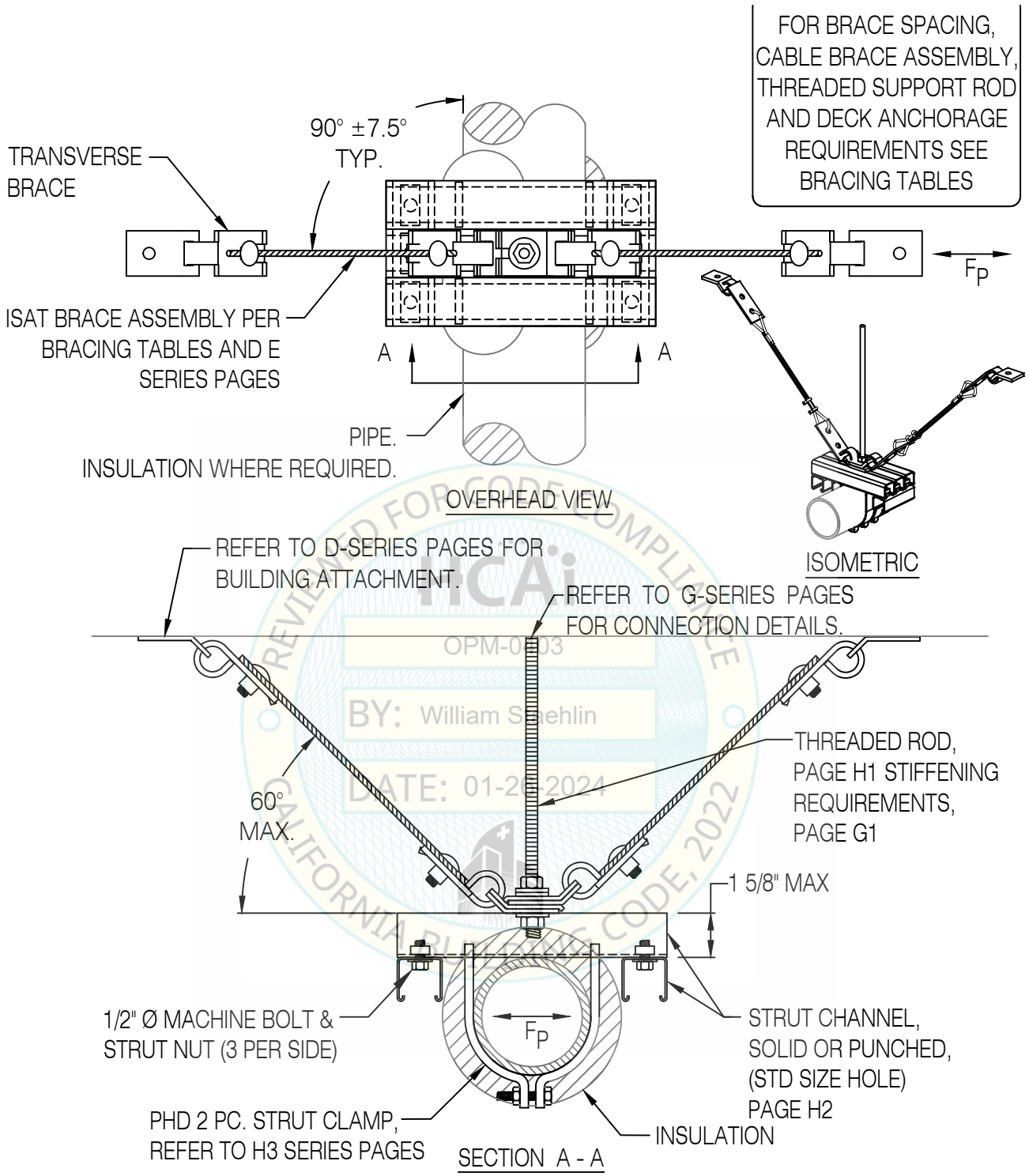

REVIEWED FOR CODE COMPLIANCE
HCAi
OPM-0403
BY: William Staehlin
DATE: 01-26-2024
CALIFORNIA BUILDING CODE, 2022

SINGLE HUNG PIPE, TRIPLE STRUT CLAMP
2-WAY TRANSVERSE, CABLE BRACING

REGISTERED PROFESSIONAL ENGINEER
MARCIN WASAZNIK
S-6612
STRUCTURAL
STATE OF CALIFORNIA

ISAT
A Division of Tomarco Contractor Specialties

International Seismic Application Technology
14848 Northam Street, La Mirada, CA 90638
877-999-4728 (Toll Free) 714-523-0845 (fax)
www.isatsb.com

Rev. 0
06/26/18

Page
B6.11

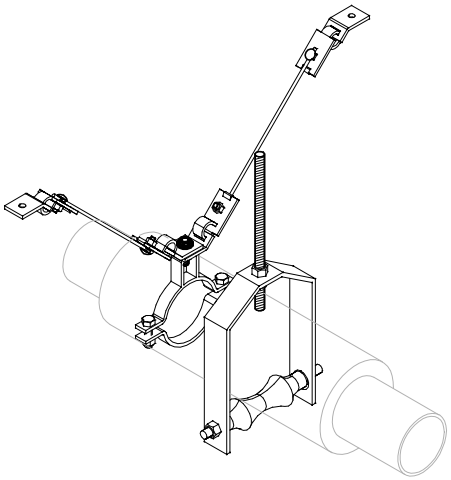

ISOMETRIC VIEW

**STEEL PIPE CONFORMING TO ASTM A53 TYPE E GR. B
COPPER PIPE TYPE K OR L

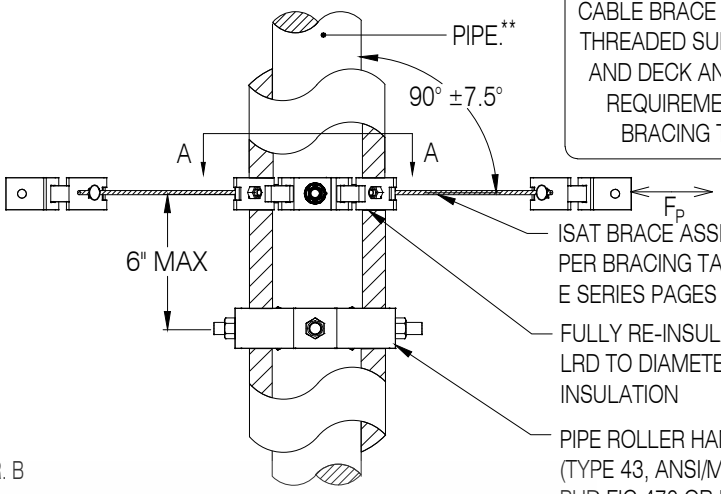

OVERHEAD VIEW

FOR BRACE SPACING, CABLE BRACE ASSEMBLY, THREADED SUPPORT ROD AND DECK ANCHORAGE REQUIREMENTS SEE BRACING TABLES

ISAT BRACE ASSEMBLY PER BRACING TABLES AND E SERIES PAGES

FULLY RE-INSULATE AROUND LRD TO DIAMETER OF PIPE INSULATION

PIPE ROLLER HANGER (TYPE 43, ANSI/MSS SP-58) PHD FIG 470 OR EQUAL FOR PROPER SIZING WITH INSULATION REFER TO MANUFACTURER'S RECOMMENDATIONS, "PIPE ROLLER SECTION GUIDE"

REFER TO D-SERIES PAGES FOR BUILDING ATTACHMENT, TYP

THREADED ROD, PAGE H1 STIFFENING REQUIREMENTS, REFER TO G1 SERIES DETAILS

REFER TO G-SERIES PAGES FOR CONNECTION DETAILS

ISAT BRACE ASSEMBLY PER BRACING TABLES AND E SERIES PAGES. INSTALL W/ SUFFICIENT SLACK TO ACCOMODATE THERMAL EXPANSION OR CONTRACTION (MAX AXIAL PIPE MOVEMENT = 3")

45°±5° *

LONGITUDINAL RESTRAINT DEVICE (LRD), REFER TO F7 SERIES PAGES

ALTERNATE LRD PAGE F7.1

TYP
E70

1/4", 4" THRU 6" DIA
5/16", 8" THRU 16" DIA
MIN SCHEDULE 40 - STEEL PIPE

WELDED LUG ALTERNATE

F_P

CALCIUM SILICATE (PER ASTM C533) PIPE SUPPORT W/ MIN 18 GA. SHEET METAL PIPE SHIELD (T&B), MIN 12" LONG

PIPE ROLLER HANGER (TYPE 43, ANSI/MSS SP-58)

SECTION A-A

SHEET METAL PIPE SHIELD

ATR

1/8" TO 1/4" MAX GAP (TO MAINTAIN ACCEPTANCE OF SUPPORT TO RECEIVE COMPRESSIVE LOAD)

ATR @ TOP OF INSULATION

AXIAL PIPE MOVEMENT LIMITED TO 3 INCH MAX

REVIEWED FOR CODE COMPLIANCE
HCAI
OPM-0403
By: William Staehlin
DATE: 01-26-2024
CALIFORNIA BUILDING CODE, 2022

ROLLER HUNG PIPE WITH CALCIUM SILICATE PIPE SUPPORT
2-WAY TRANSVERSE CABLE BRACING

* FOR OTHER ANGLES CONTACT ISAT TECHNICAL SUPPORT, DESIGN SUBJECT TO APPROVAL OF ENFORCEMENT AGENCY.

REGISTERED PROFESSIONAL ENGINEER MARCIN WASAZNIK S-6612 STRUCTURAL STATE OF CALIFORNIA

ISAT
A Division of Tomarco Contractor Specialties
International Seismic Application Technology
14848 Northam Street, La Mirada, CA 90638
877-999-4728 (Toll Free) 714-523-0845 (fax)
www.isatsb.com

Rev. 1
08/29/23

Page
B6.12

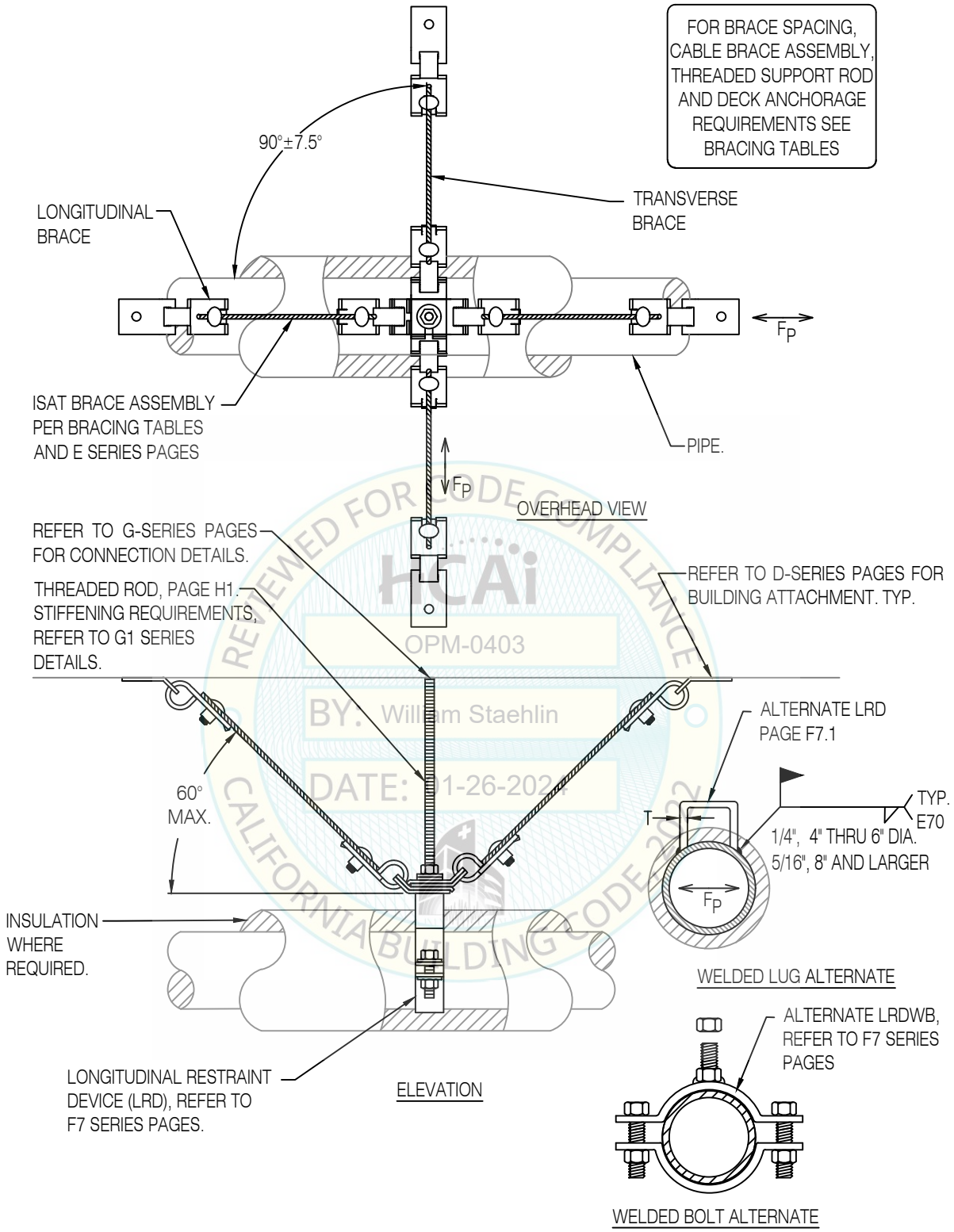

REVIEWED FOR CODE COMPLIANCE
HCAi
OPM-0403
BY: William Staehlin
DATE: 01-26-2024
CALIFORNIA BUILDING CODE 2022

SINGLE HUNG PIPE, WITH LRD
4-WAY TRANSVERSE-LONGITUDINAL, CABLE BRACING

REGISTERED PROFESSIONAL ENGINEER MARCIN WASAZNIK S-6612 STRUCTURAL STATE OF CALIFORNIA

ISAT
A Division of Tomarco Contractor Specialties

International Seismic Application Technology
14848 Northam Street, La Mirada, CA 90638
877-999-4728 (Toll Free) 714-523-0845 (fax)
www.isatsb.com

Rev. 3
10/05/18

Page
B7.0

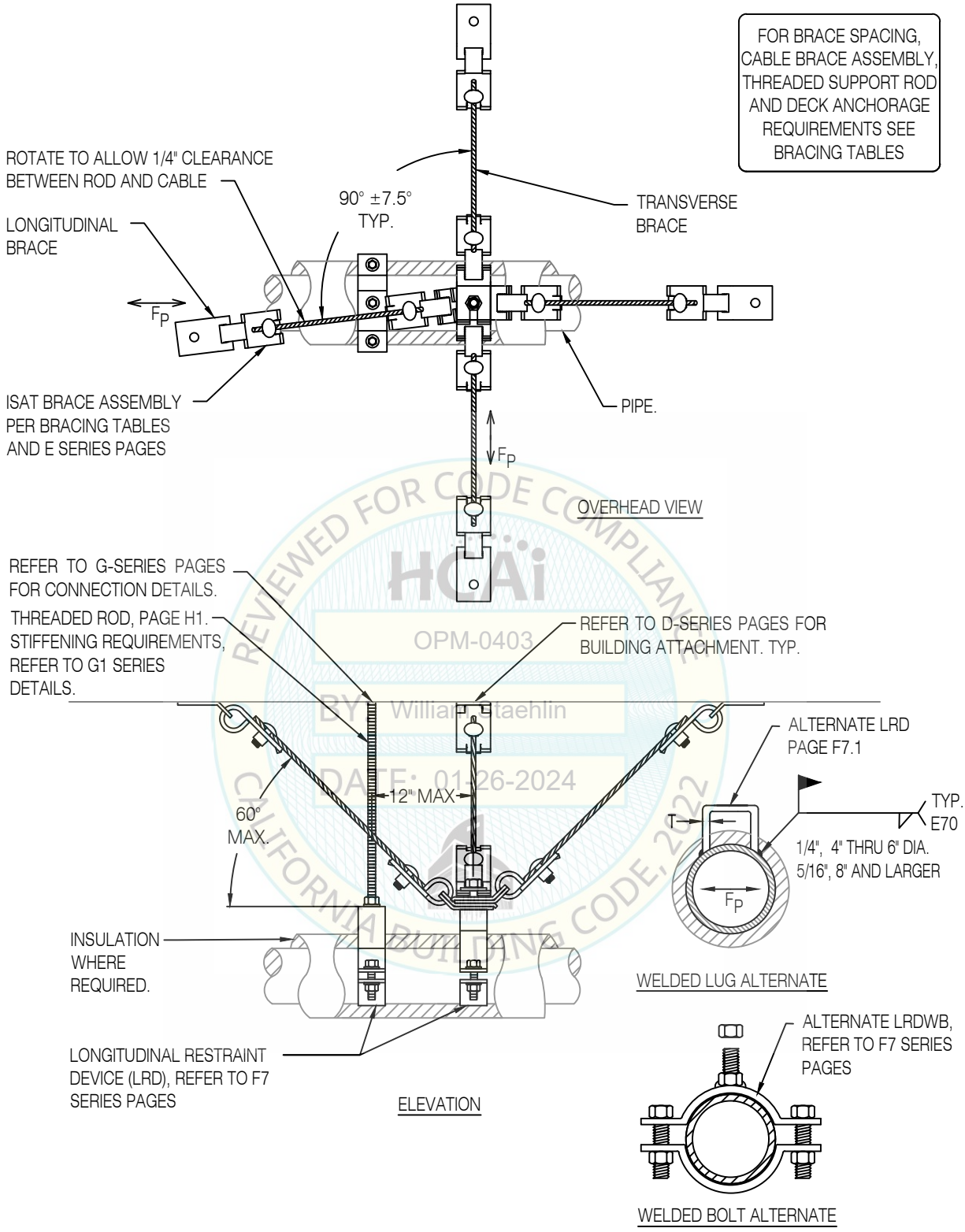

REVIEWED FOR CODE COMPLIANCE
HCAi
OPM-0403
BY: William Staehlin
DATE: 01-26-2024
CALIFORNIA BUILDING CODE, 2022

SINGLE HUNG PIPE WITH TWO LRDs
4-WAY TRANSVERSE - LONGITUDINAL, CABLE BRACING

REGISTERED PROFESSIONAL ENGINEER MARCIN WASAZNIK S-6612 STRUCTURAL STATE OF CALIFORNIA

ISAT
A Division of Tomarco Contractor Specialties
International Seismic Application Technology
14848 Northam Street, La Mirada, CA 90638
877-999-4728 (Toll Free) 714-523-0845 (fax)
www.isatsb.com

Rev. 1
10/05/18

Page
B7.1

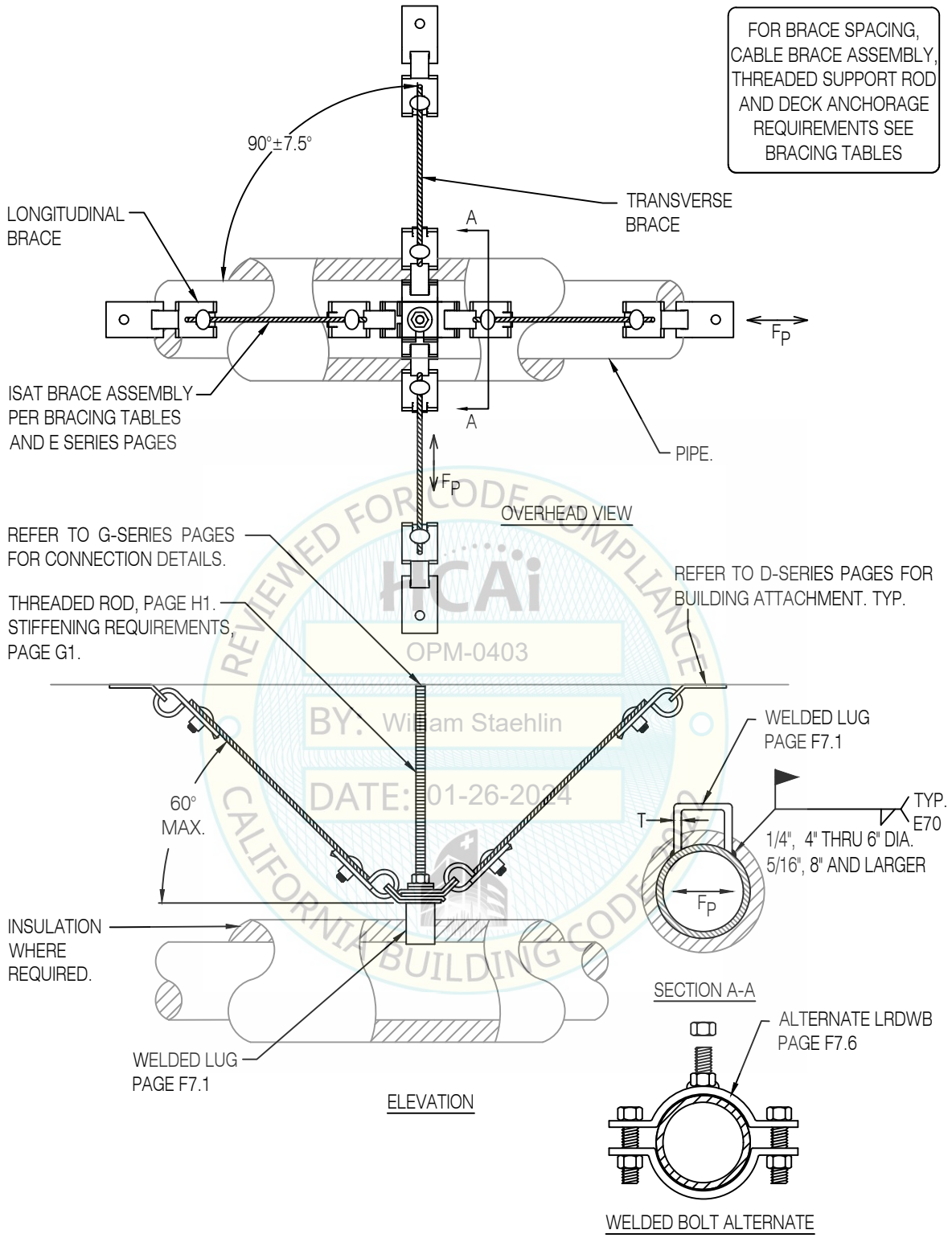

REVIEWED FOR CODE COMPLIANCE
HCAi
OPM-0403
BY: William Staehlin
DATE: 01-26-2024
CALIFORNIA BUILDING CODE

SINGLE HUNG PIPE, WITH WELDED LUG
4-WAY TRANSVERSE-LONGITUDINAL, CABLE BRACING

REGISTERED PROFESSIONAL ENGINEER MARCIN WASAZNIK S-6612 STRUCTURAL STATE OF CALIFORNIA

ISAT
A Division of Tomarco Contractor Specialties

International Seismic Application Technology
14848 Northam Street, La Mirada, CA 90638
877-999-4728 (Toll Free) 714-523-0845 (fax)
www.isatsb.com

Rev. 0
06/26/18

Page
B7.2

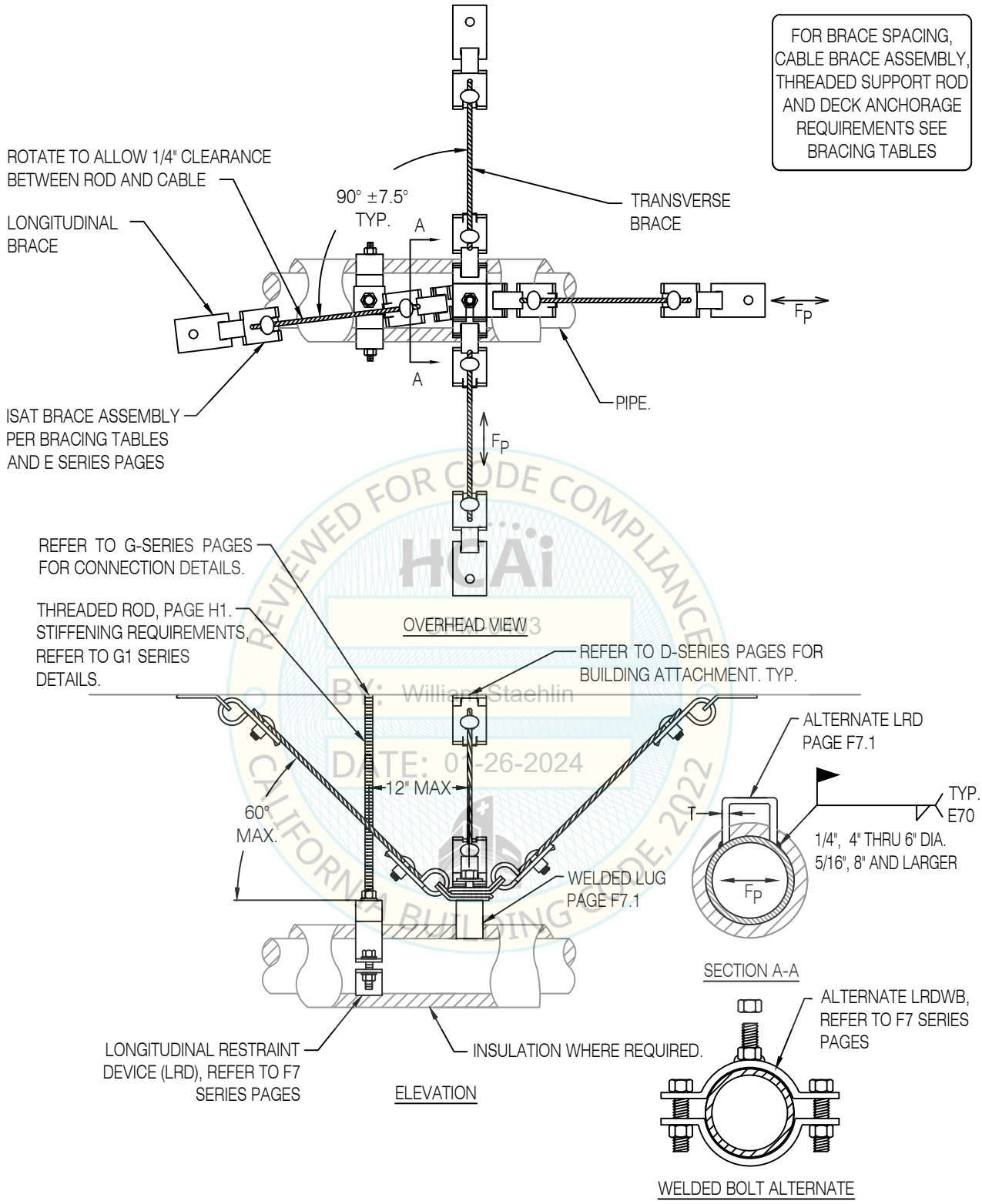

REVIEWED FOR CODE COMPLIANCE
HCAi
By: William Staehlin
DATE: 01-26-2024
CALIFORNIA BUILDING CODE, 2022

SINGLE HUNG PIPE, WITH LRD & WELDED LUG
4-WAY TRANSVERSE - LONGITUDINAL, CABLE BRACING

REGISTERED PROFESSIONAL ENGINEER MARCIN WASAZNIK S-6612 STRUCTURAL STATE OF CALIFORNIA

ISAT
A Division of Tomarco Contractor Specialties
International Seismic Application Technology
14848 Northam Street, La Mirada, CA 90638
877-999-4728 (Toll Free) 714-523-0845 (fax)
www.isatsb.com

Rev. 1
10/05/18

Page
B8.4

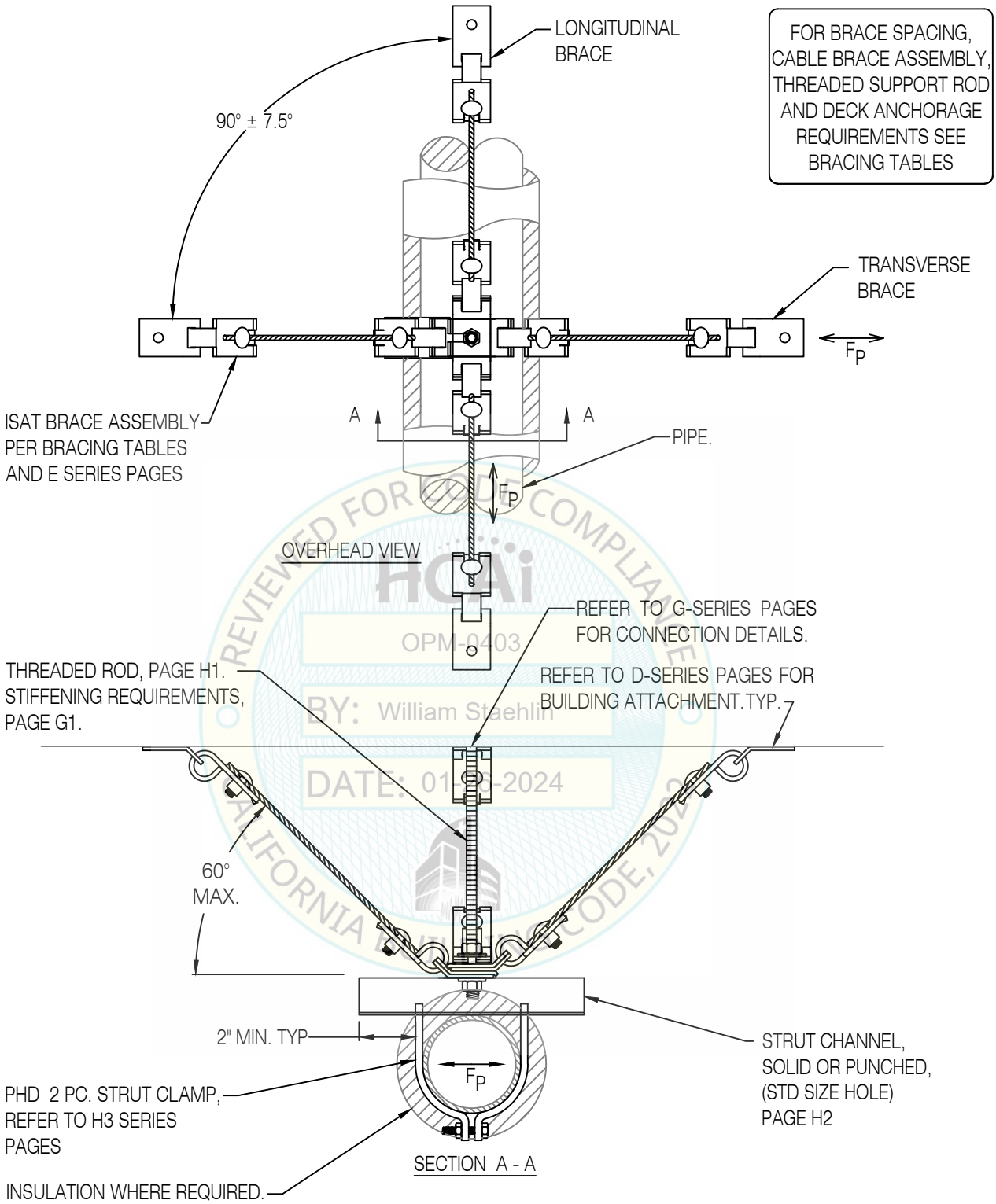

REVIEWED FOR CODE COMPLIANCE
HCAi
OPM-0403
BY: William Staehlin
DATE: 01-26-2024
CALIFORNIA BUILDING CODE, 2022

SINGLE HUNG PIPE, STRUT CLAMP
4-WAY TRANSVERSE - LONGITUDINAL , CABLE BRACING

REGISTERED PROFESSIONAL ENGINEER MARCIN WASAZNIK S-6612 STRUCTURAL STATE OF CALIFORNIA

ISAT
A Division of Tomarco Contractor Specialties
International Seismic Application Technology
14848 Northam Street, La Mirada, CA 90638
877-999-4728 (Toll Free) 714-523-0845 (fax)
www.isatsb.com

Rev. 0
06/26/18

Page
B8.9

FOR BRACE SPACING, CABLE BRACE ASSEMBLY, THREADED SUPPORT ROD AND DECK ANCHORAGE REQUIREMENTS SEE BRACING TABLES

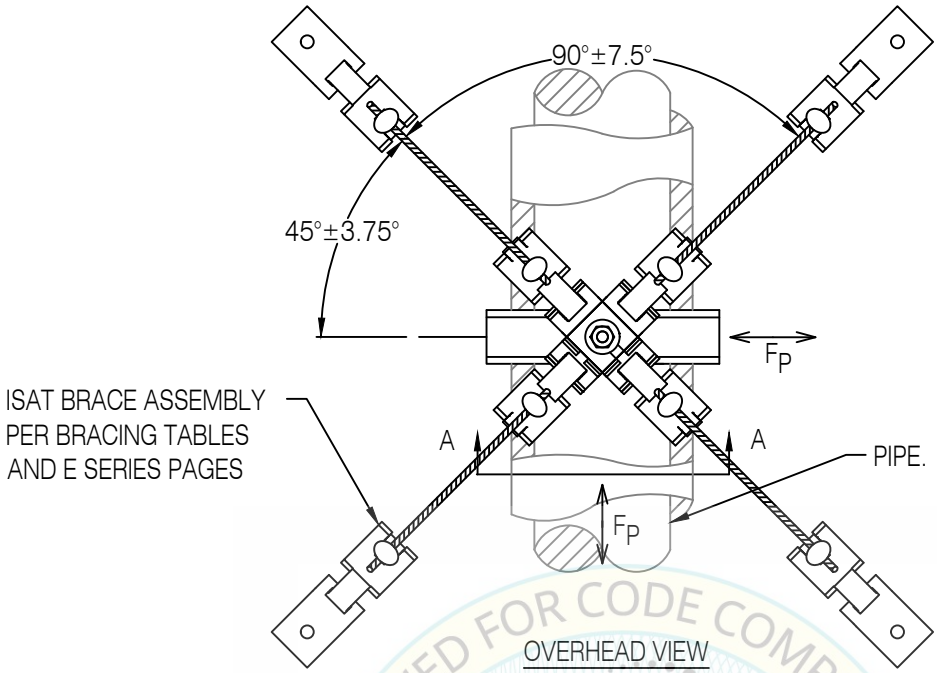

OVERHEAD VIEW

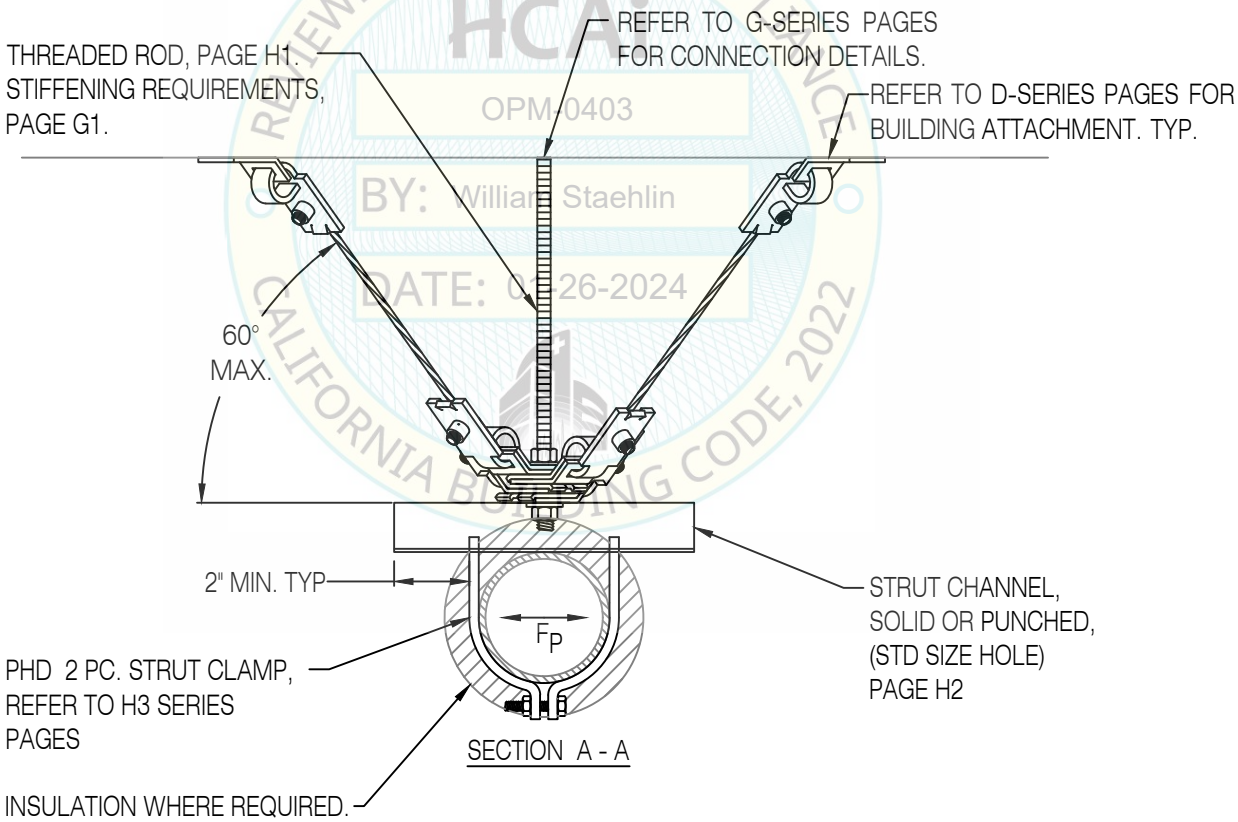

SECTION A - A

REVIEWED FOR CODE COMPLIANCE
HCA:
OPM-0403
BY: William Staehlin
DATE: 01-26-2024
CALIFORNIA BUILDING CODE, 2022

SINGLE HUNG PIPE, STRUT CLAMP
4-WAY SPLAY, CABLE BRACING

REGISTERED PROFESSIONAL ENGINEER
MARCIN WASAZNIK
S-6612
STRUCTURAL
STATE OF CALIFORNIA

ISAT
A Division of Tomarco Contractor Specialties

International Seismic Application Technology
14848 Northam Street, La Mirada, CA 90638
877-999-4728 (Toll Free) 714-523-0845 (fax)
www.isatsb.com

Rev. 0
06/26/18

Page
B8.10

FOR BRACE SPACING, CABLE BRACE ASSEMBLY, THREADED SUPPORT ROD AND DECK ANCHORAGE REQUIREMENTS SEE BRACING TABLES

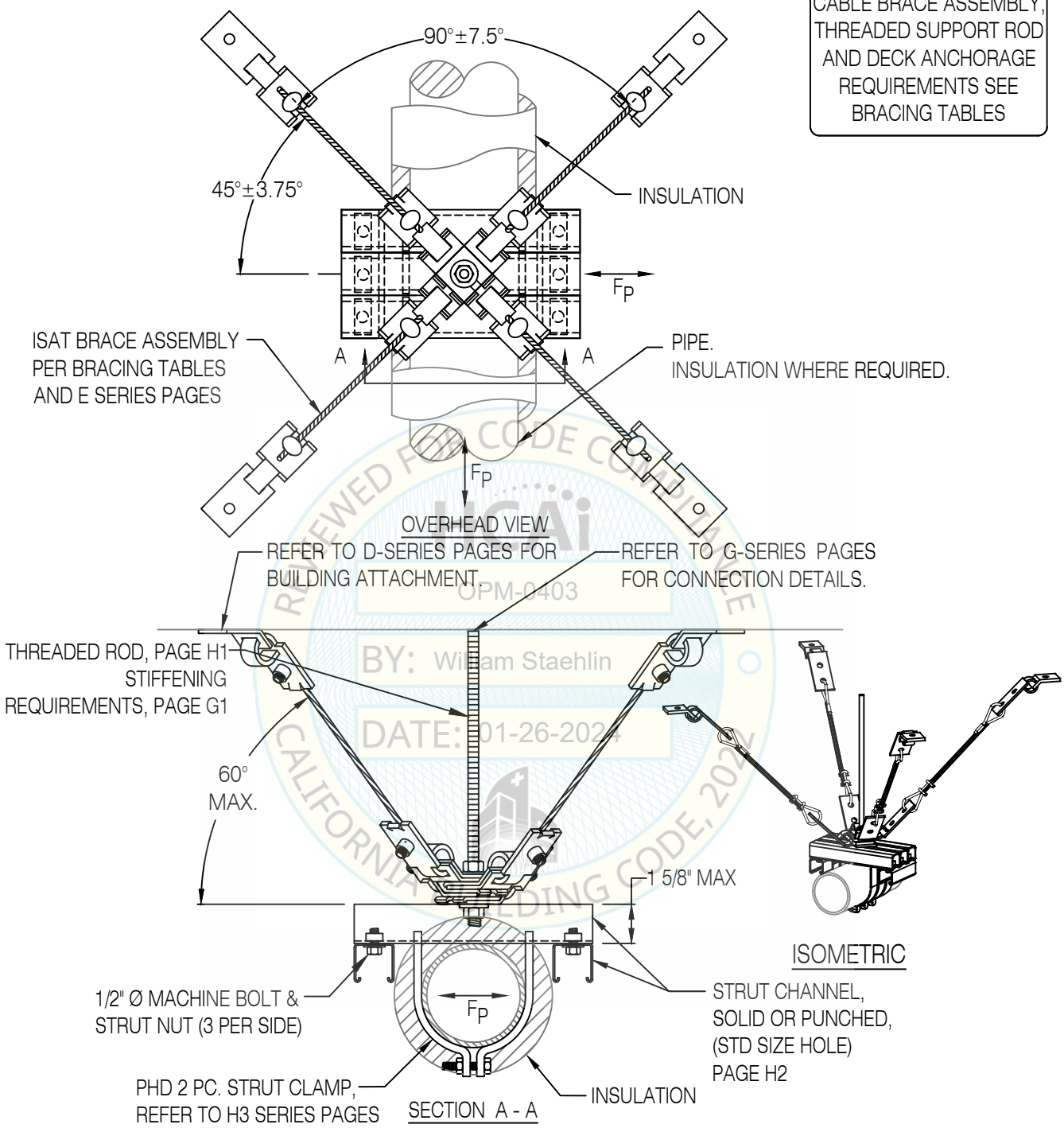

REVIEWED FOR CODE COMPLIANCE
OPM-0403
BY: William Staehlin
DATE: 01-26-2024
CALIFORNIA BUILDING CODE, 2022

SINGLE HUNG PIPE, TRIPLE STRUT CLAMP
4-WAY SPLAY, CABLE BRACING

REGISTERED PROFESSIONAL ENGINEER MARCIN WASAZNIK S-6612 STRUCTURAL STATE OF CALIFORNIA

ISAT
A Division of Tomarco Contractor Specialties
International Seismic Application Technology
14848 Northam Street, La Mirada, CA 90638
877-999-4728 (Toll Free) 714-523-0845 (fax)
www.isatsb.com

Rev. 0
06/26/18

Page
B8.11

FOR BRACE SPACING, CABLE BRACE ASSEMBLY, THREADED SUPPORT ROD AND DECK ANCHORAGE REQUIREMENTS SEE BRACING TABLES

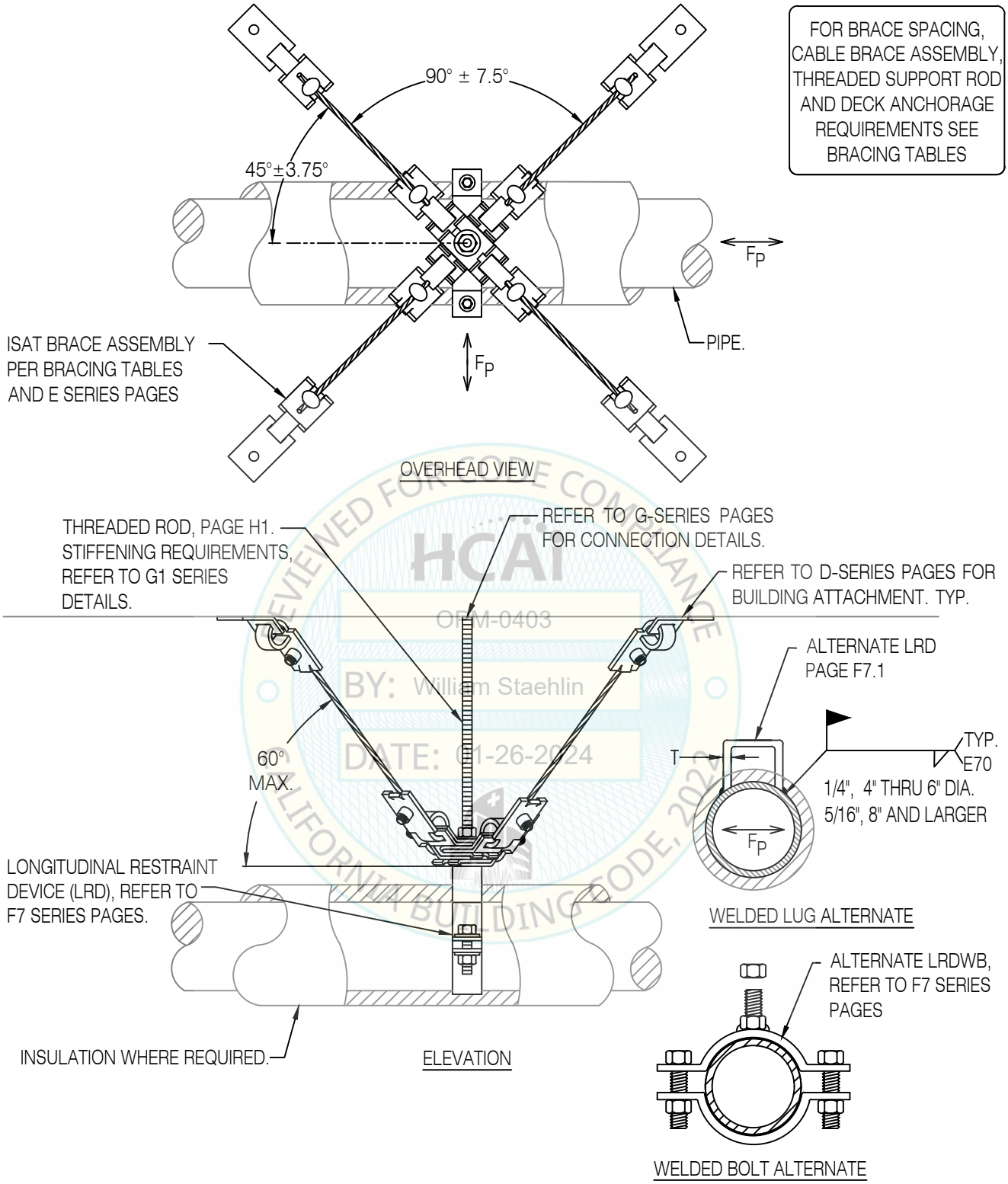

REVIEWED FOR CODE COMPLIANCE
HCAI
OPM-0403
BY: William Staehlin
DATE: 01-26-2024
CALIFORNIA BUILDING CODE, 2022

SINGLE HUNG PIPE, WITH LRD HANGER
4-WAY SPLAYED, CABLE BRACING

REGISTERED PROFESSIONAL ENGINEER
MARCIN WASAZNIK
S-6612
STRUCTURAL
STATE OF CALIFORNIA

ISAT
A Division of Tomarco Contractor Specialties

International Seismic Application Technology
14848 Northam Street, La Mirada, CA 90638
877-999-4728 (Toll Free) 714-523-0845 (fax)
www.isatsb.com

Rev. 1
10/05/18

Page
B9.0

FOR BRACE SPACING, CABLE BRACE ASSEMBLY, THREADED SUPPORT ROD AND DECK ANCHORAGE REQUIREMENTS SEE BRACING TABLES

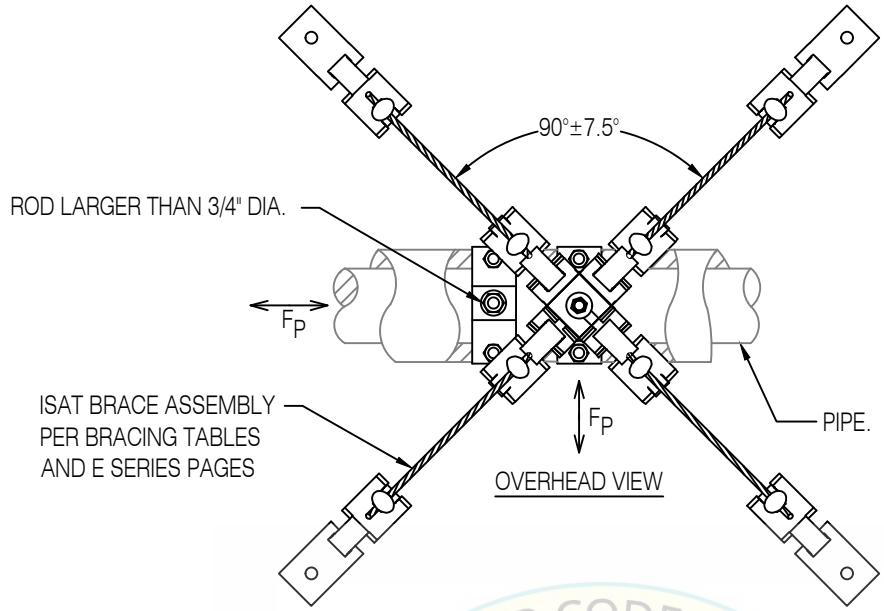

OVERHEAD VIEW

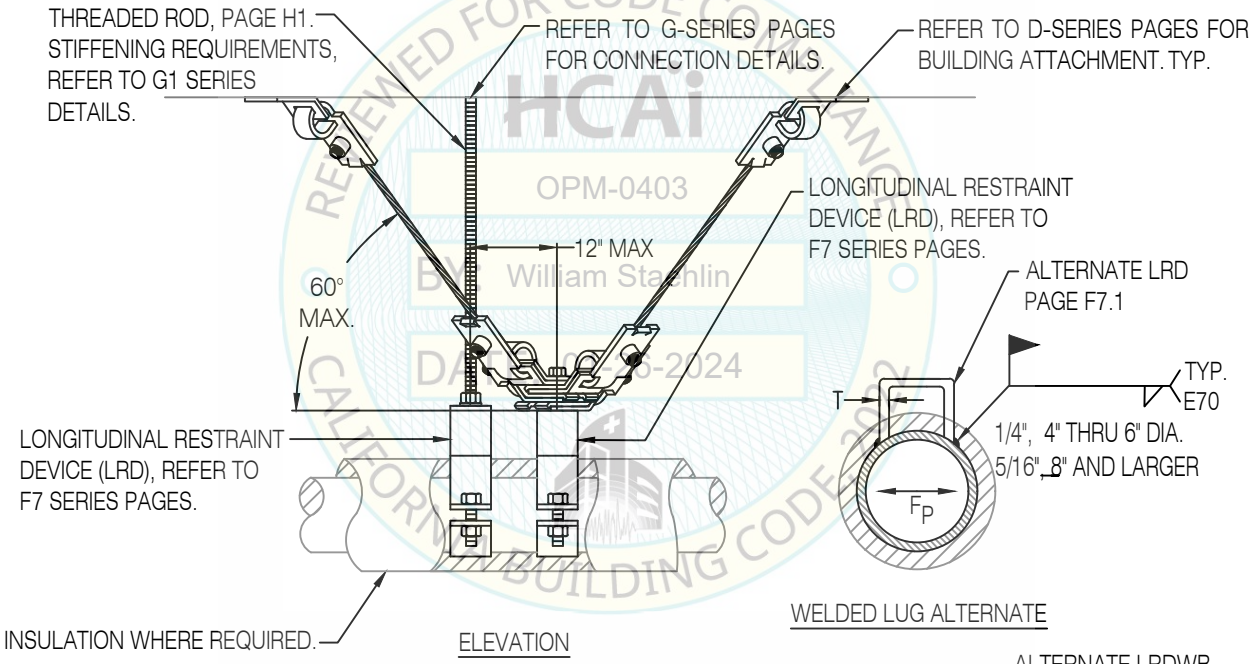

ELEVATION

WELDED LUG ALTERNATE

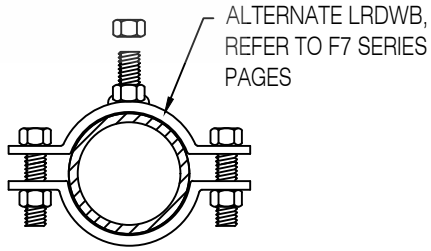

WELDED BOLT ALTERNATE

REVIEWED FOR CODE COMPLIANCE
HCAi
OPM-0403
By: William Staehlin
DATE: 01-26-2024
CALIFORNIA BUILDING CODE 2019

SINGLE HUNG PIPE, WITH TWO LRDs
4-WAY SPLAYED , CABLE BRACING

REGISTERED PROFESSIONAL ENGINEER MARCIN WASAZNIK S-6612 STRUCTURAL STATE OF CALIFORNIA

ISAT
A Division of Tomarco Contractor Specialties
International Seismic Application Technology
14848 Northam Street, La Mirada, CA 90638
877-999-4728 (Toll Free) 714-523-0845 (fax)
www.isatsb.com

Rev. 1
10/05/18

Page
B9.1

FOR BRACE SPACING, CABLE BRACE ASSEMBLY, THREADED SUPPORT ROD AND DECK ANCHORAGE REQUIREMENTS SEE BRACING TABLES

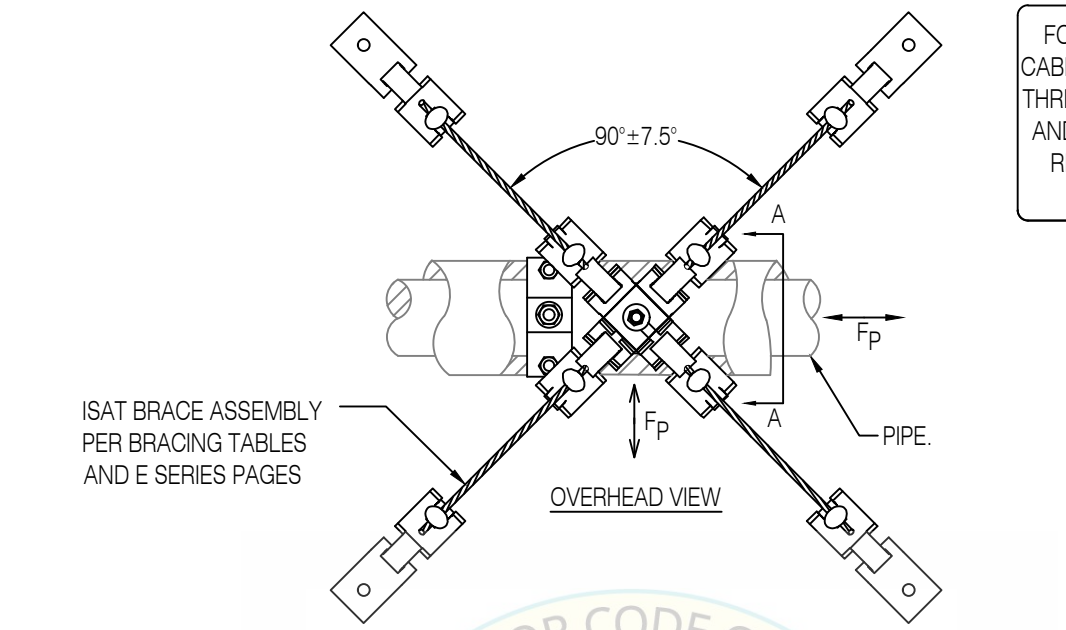

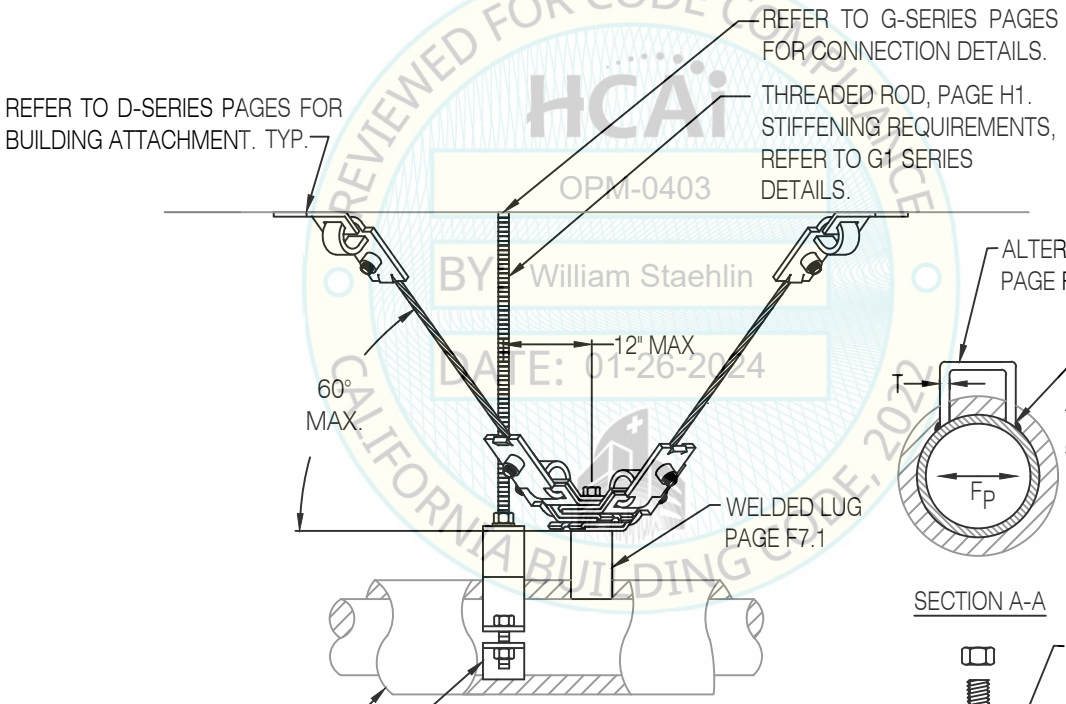

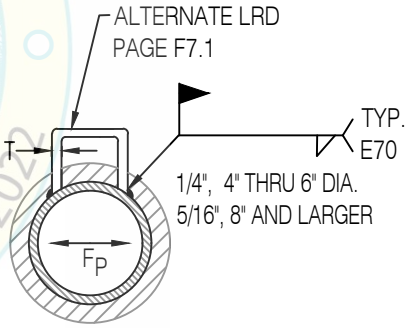

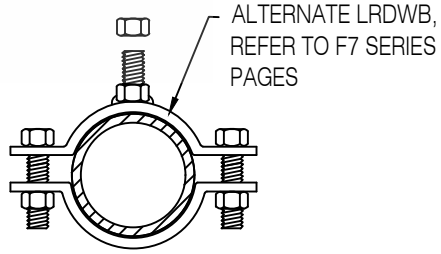

REVIEWED FOR CODE COMPLIANCE
HCAi
OPM-0403
BY: William Staehlin
DATE: 01-26-2024
CALIFORNIA BUILDING CODE, 2022

SINGLE HUNG PIPE, WITH LRD & WELDED LUG
4-WAY SPLAYED , CABLE BRACING

REGISTERED PROFESSIONAL ENGINEER
MARCIN WASAZNIK
S-6612
STRUCTURAL
STATE OF CALIFORNIA

ISAT
A Division of Tomarco Contractor Specialties

International Seismic Application Technology
14848 Northam Street, La Mirada, CA 90638
877-999-4728 (Toll Free) 714-523-0845 (fax)
www.isatsb.com

Rev. 1
10/05/18

Page
B9.1.1

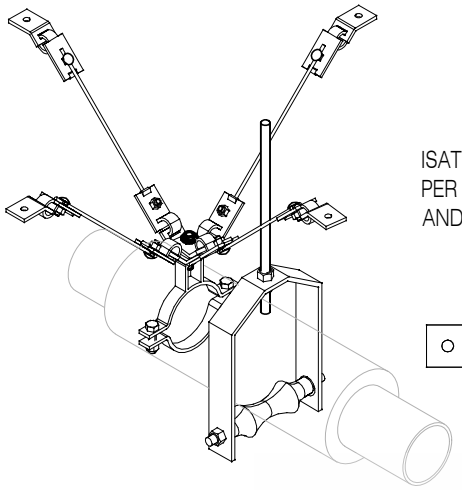

ISOMETRIC VIEW

**STEEL PIPE CONFORMING TO ASTM A53 TYPE E GR. B
COPPER PIPE TYPE K OR L

FOR BRACE SPACING, CABLE BRACE ASSEMBLY, THREADED SUPPORT ROD AND DECK ANCHORAGE REQUIREMENTS SEE BRACING TABLES

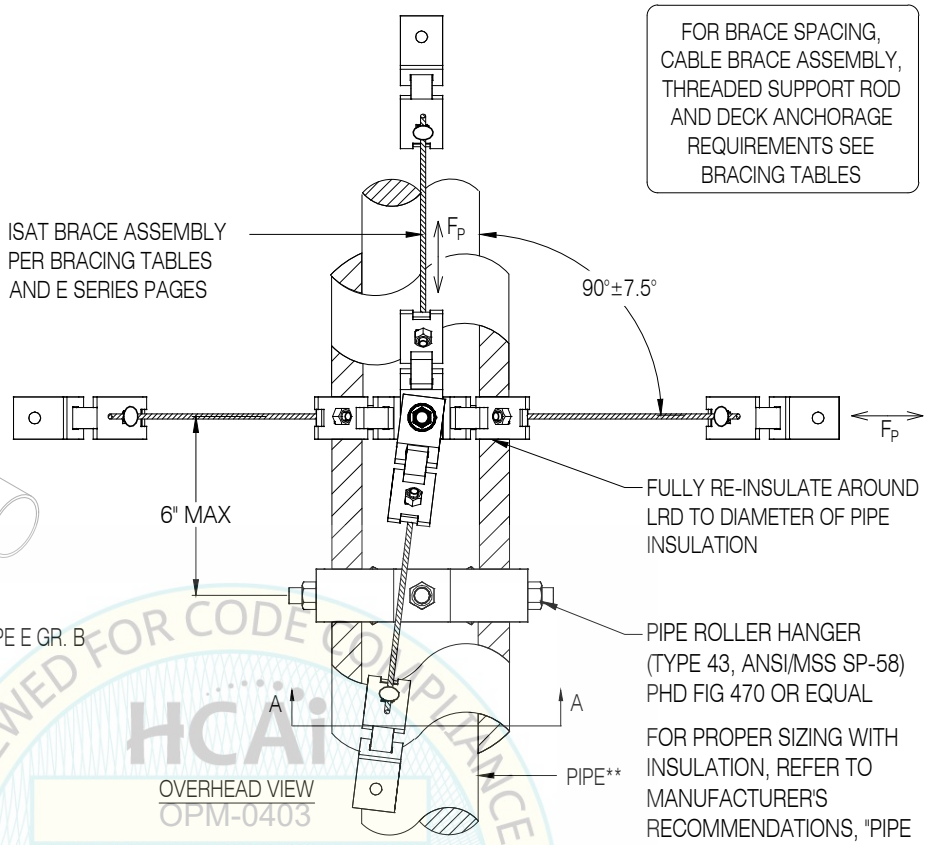

OVERHEAD VIEW

FOR PROPER SIZING WITH INSULATION, REFER TO MANUFACTURER'S RECOMMENDATIONS, "PIPE ROLLER SELECTION GUIDE"

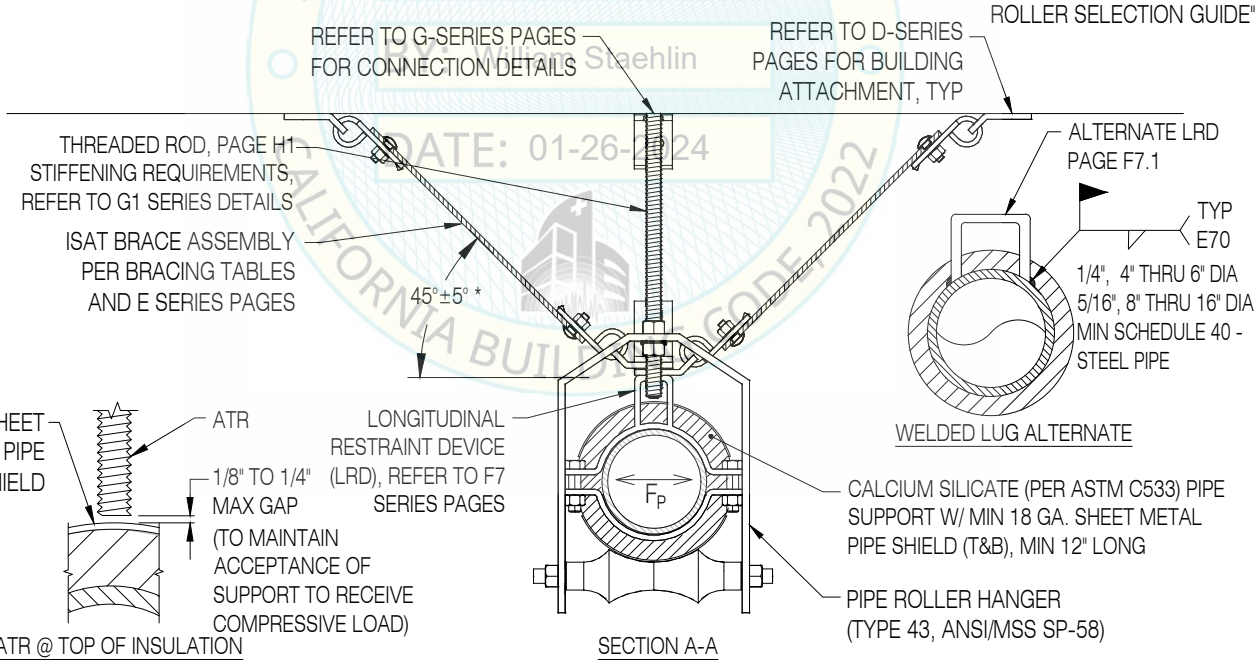

ATR @ TOP OF INSULATION

SECTION A-A

WELDED LUG ALTERNATE

ROLLER HUNG PIPE WITH CALCIUM SILICATE PIPE SUPPORT
4-WAY TRANSVERSE-LONGITUDINAL CABLE BRACING

* FOR OTHER ANGLES CONTACT ISAT TECHNICAL SUPPORT,
DESIGN SUBJECT TO APPROVAL OF ENFORCEMENT AGENCY.

REGISTERED PROFESSIONAL ENGINEER
MARCIN WASAZNIK
S 6612
STRUCTURAL
STATE OF CALIFORNIA

ISAT
A Division of Tomarco Contractor Specialties

International Seismic Application Technology
14848 Northam Street, La Mirada, CA 90638
877-999-4728 (Toll Free) 714-523-0845 (fax)
www.isatsb.com

Rev. 1
08/24/2023

Page
B10.1

HCAi
OPM-0403
REVIEWED FOR CODE COMPLIANCE
by William Staehlin
DATE: 01-26-2024
CALIFORNIA BUILDING CODE 2022

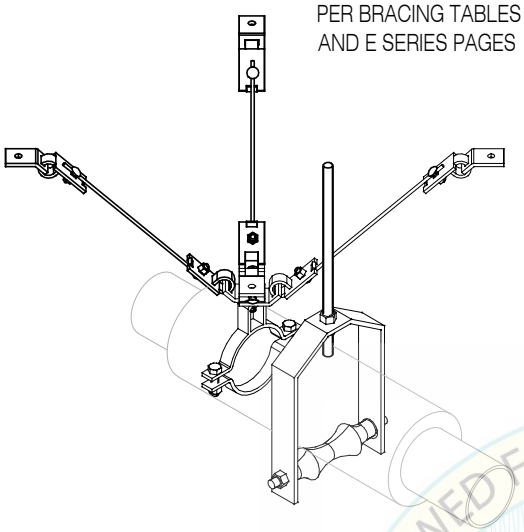

ISOMETRIC VIEW

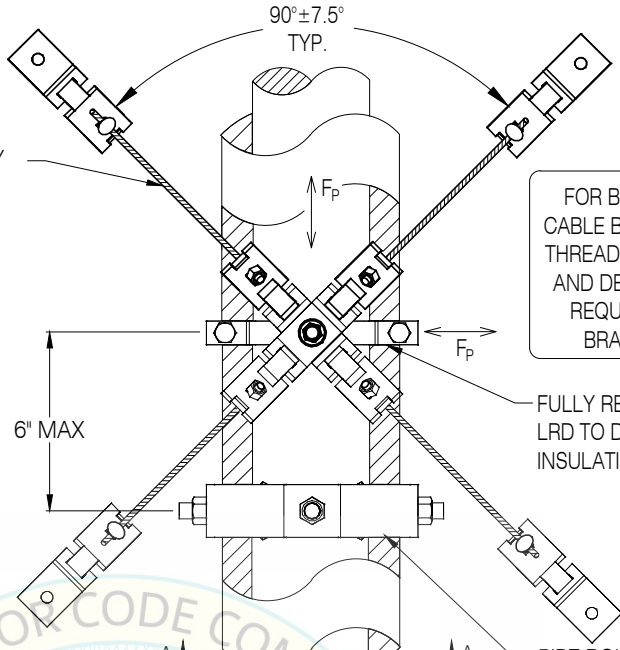

OVERHEAD VIEW

FOR BRACE SPACING, CABLE BRACE ASSEMBLY, THREADED SUPPORT ROD AND DECK ANCHORAGE REQUIREMENTS SEE BRACING TABLES

**STEEL PIPE CONFORMING TO ASTM A53 TYPE E GR. B
COPPER PIPE TYPE K OR L

F_P

FOR PROPER SIZING WITH INSULATION REFER TO MANUFACTURER'S RECOMMENDATIONS, "PIPE ROLLER SELECTION GUIDE"

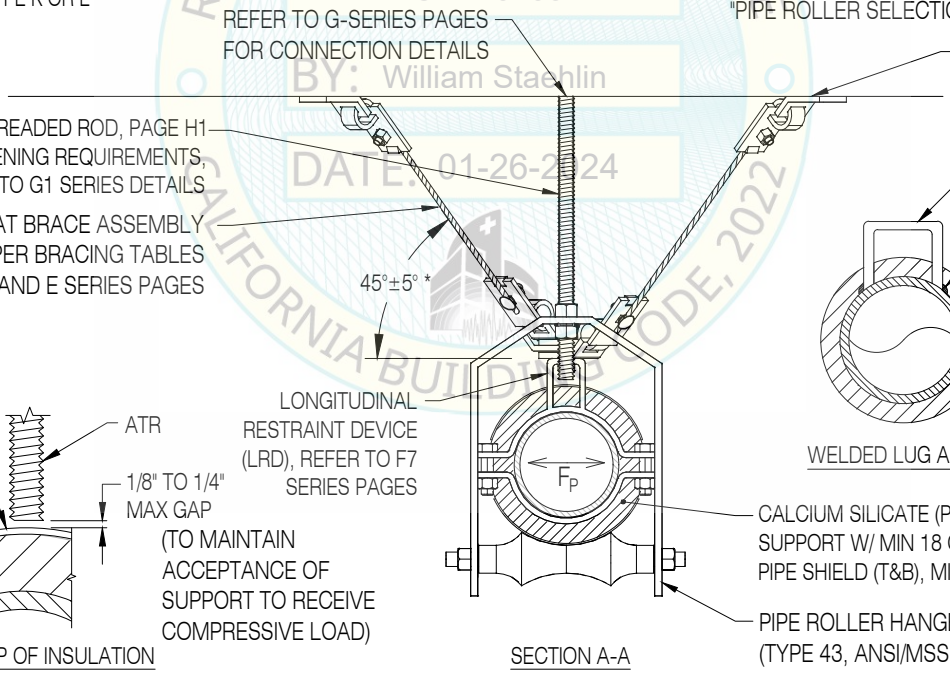

SECTION A-A

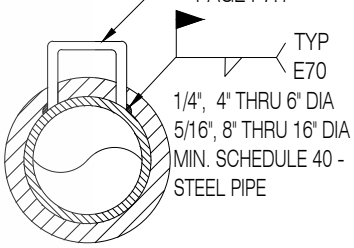

WELDED LUG ALTERNATE

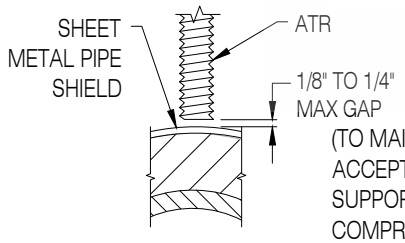

ATR @ TOP OF INSULATION

ROLLER HUNG PIPE WITH CALCIUM SILICATE PIPE SUPPORT
4-WAY SPLAYED TRANSVERSE-LONGITUDINAL CABLE BRACING

* FOR OTHER ANGLES CONTACT ISAT TECHNICAL SUPPORT,
DESIGN SUBJECT TO APPROVAL OF ENFORCEMENT AGENCY.

ISAT
A Division of Tomarco Contractor Specialties

International Seismic Application Technology
14848 Northam Street, La Mirada, CA 90638
877-999-4728 (Toll Free) 714-523-0845 (fax)
www.isatsb.com

Rev. 2
08/24/23

Page
B10.2

REVIEWED FOR CODE COMPLIANCE
HCAi
OPM-0403
BY: William Staehlin
DATE: 01-26-2024
CALIFORNIA BUILDING CODE, 2022

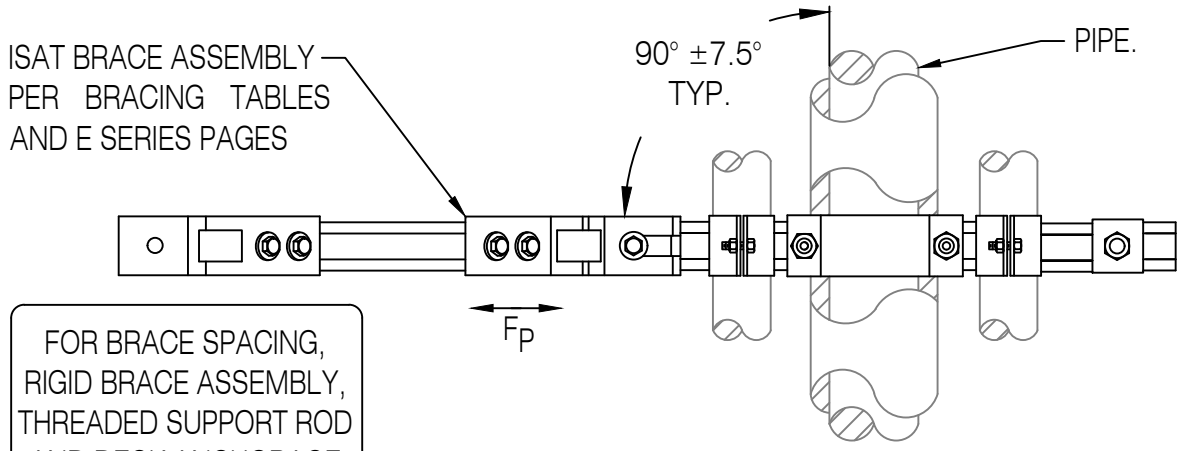

FOR BRACE SPACING, RIGID BRACE ASSEMBLY, THREADED SUPPORT ROD AND DECK ANCHORAGE REQUIREMENTS SEE BRACING TABLES

OVERHEAD VIEW

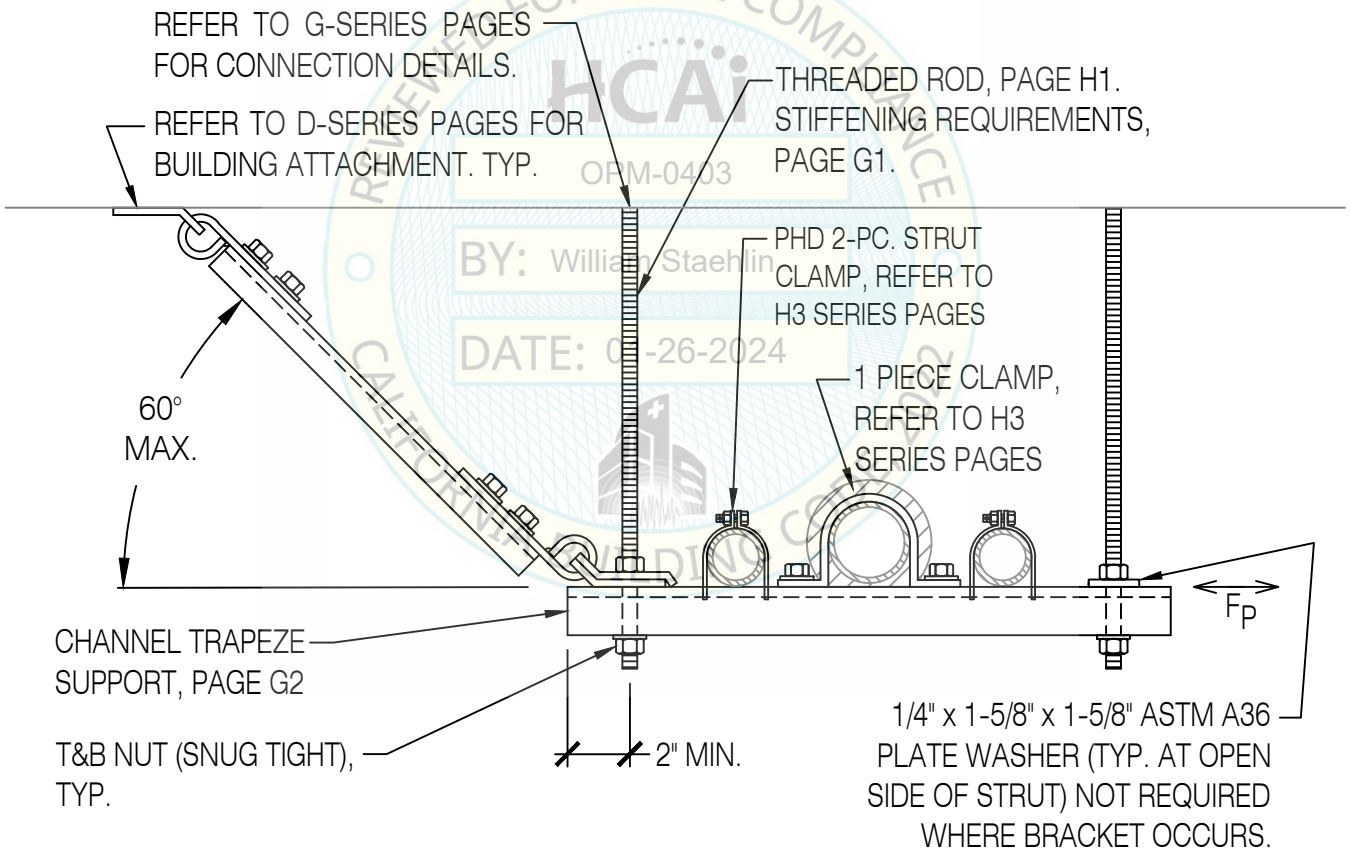

SECTION THRU PIPE TRAPEZE RACK

REVIEWED FOR CODE COMPLIANCE
HCAi
OPM-0403
BY: William Staehlin
DATE: 01-26-2024
CALIFORNIA BUILDING CODE

PIPE TRAPEZE RACK
1-WAY TRANSVERSE, RIGID BRACING

REGISTERED PROFESSIONAL ENGINEER MARCIN WASAZNIK S-6612 STRUCTURAL STATE OF CALIFORNIA

ISAT
A Division of Tomarco Contractor Specialties
International Seismic Application Technology
14848 Northam Street, La Mirada, CA 90638
877-999-4728 (Toll Free) 714-523-0845 (fax)
www.isatsb.com

Rev. 2
06/26/18

Page
B11.0

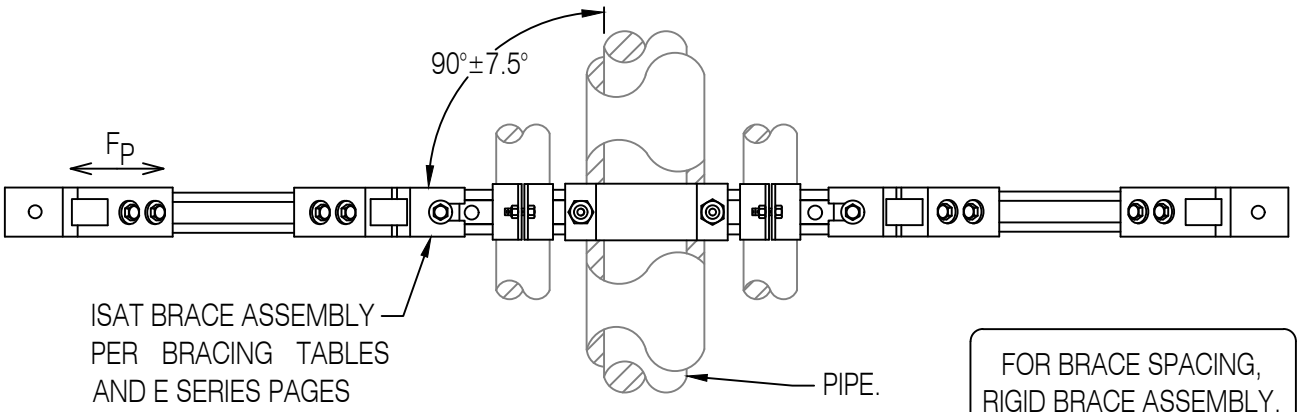

FOR BRACE SPACING, RIGID BRACE ASSEMBLY, THREADED SUPPORT ROD AND DECK ANCHORAGE REQUIREMENTS SEE BRACING TABLES

OVERHEAD VIEW

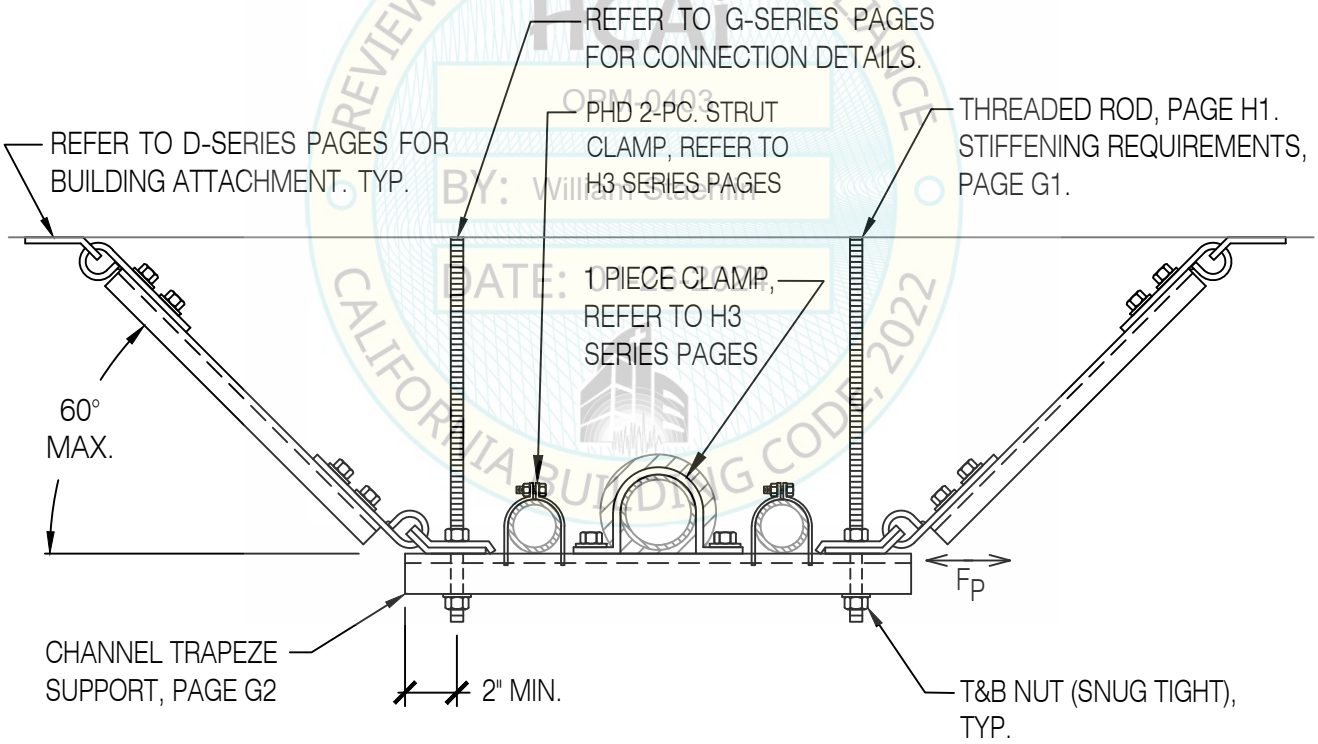

SECTION THRU PIPE TRAPEZE RACK

REVIEWED FOR CODE COMPLIANCE
HCAI
OPM 0403
BY: William Staehlin
DATE: 01/26/24
CALIFORNIA BUILDING CODE, 2022

PIPE TRAPEZE RACK
2-WAY TRANSVERSE, RIGID BRACING

REGISTERED PROFESSIONAL ENGINEER MARCIN WASAZNIK S-6612 STRUCTURAL STATE OF CALIFORNIA

ISAT
A Division of Tomarco Contractor Specialties
International Seismic Application Technology
14848 Northam Street, La Mirada, CA 90638
877-999-4728 (Toll Free) 714-523-0845 (fax)
www.isatsb.com

Rev. 2
06/26/18

Page
B11.1

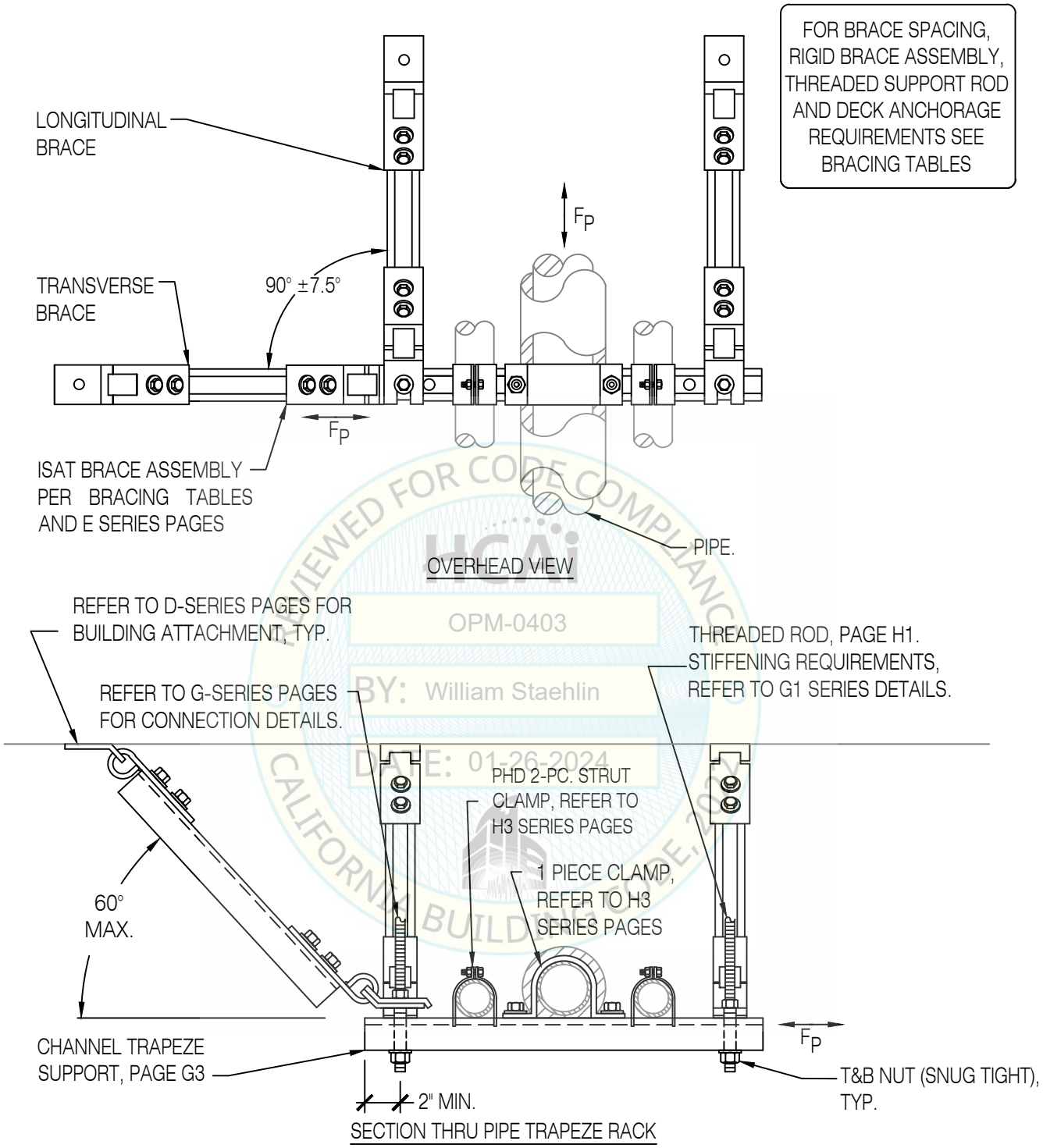

REVIEWED FOR CODE COMPLIANCE
HCAi
OPM-0403
BY: William Staehlin
DATE: 01-26-2024
CALIFORNIA BUILDING CODE, 2022

PIPE TRAPEZE RACK
3-WAY TRANSVERSE-LONGITUDINAL, RIGID BRACING

REGISTERED PROFESSIONAL ENGINEER MARCIN WASAZNIK S 6612 STRUCTURAL STATE OF CALIFORNIA

ISAT
A Division of Tomarco Contractor Specialties

International Seismic Application Technology
14848 Northam Street, La Mirada, CA 90638
877-999-4728 (Toll Free) 714-523-0845 (fax)
www.isatsb.com

Rev. 5
08/24/2023

Page
B11.2

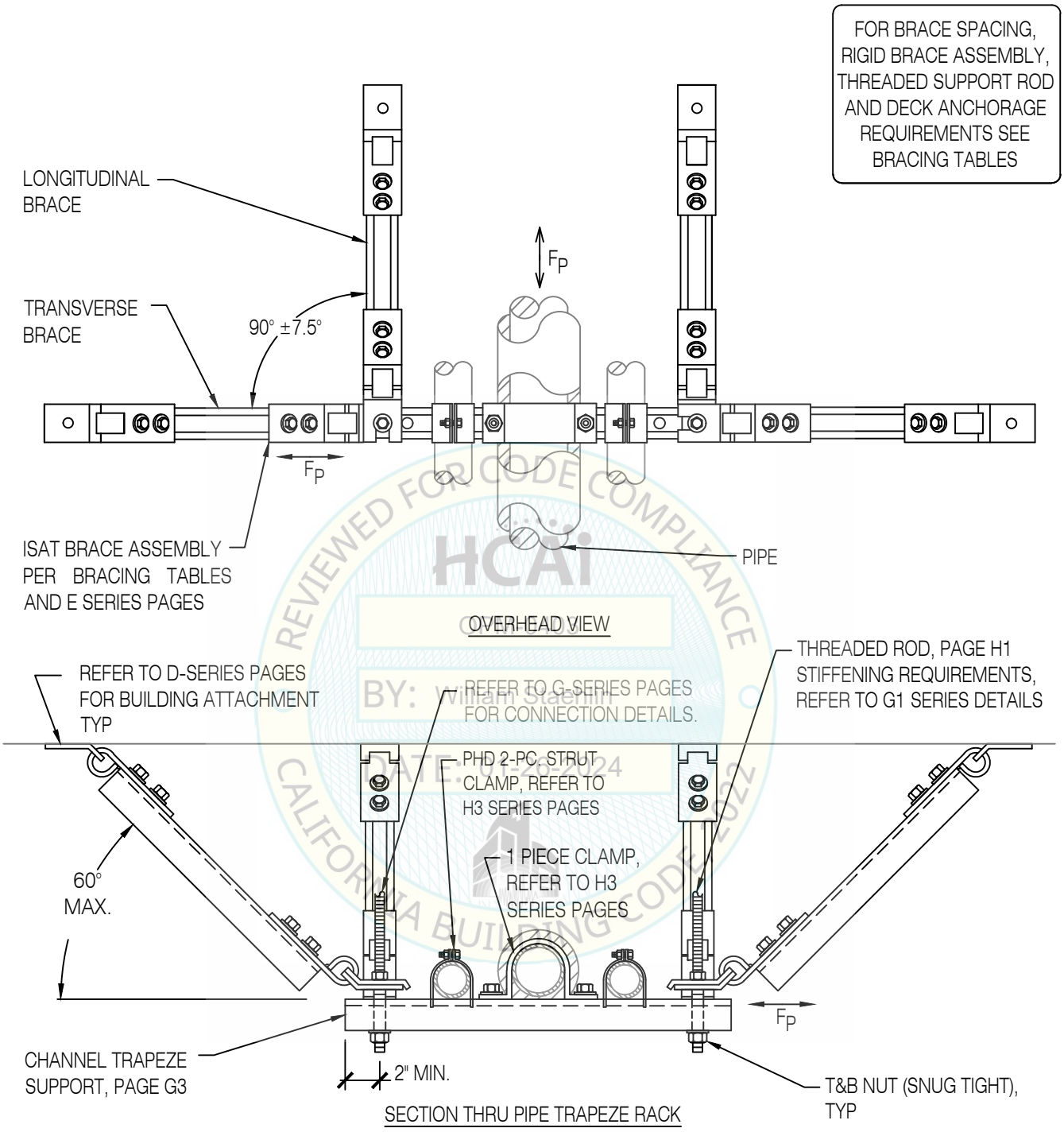

REVIEWED FOR CODE COMPLIANCE
HCAi
BY: William Staehlin
DATE: 01/26/2024
CALIFORNIA BUILDING CODE 2022

PIPE TRAPEZE RACK
4-WAY TRANSVERSE-LONGITUDINAL, RIGID BRACING

REGISTERED PROFESSIONAL ENGINEER
MARCIN WASAZNIK
S 6612
STRUCTURAL
STATE OF CALIFORNIA

ISAT
A Division of Tomarco Contractor Specialties

International Seismic Application Technology
14848 Northam Street, La Mirada, CA 90638
877-999-4728 (Toll Free) 714-523-0845 (fax)
www.isatsb.com

Rev. 3
08/25/23

Page
B11.3

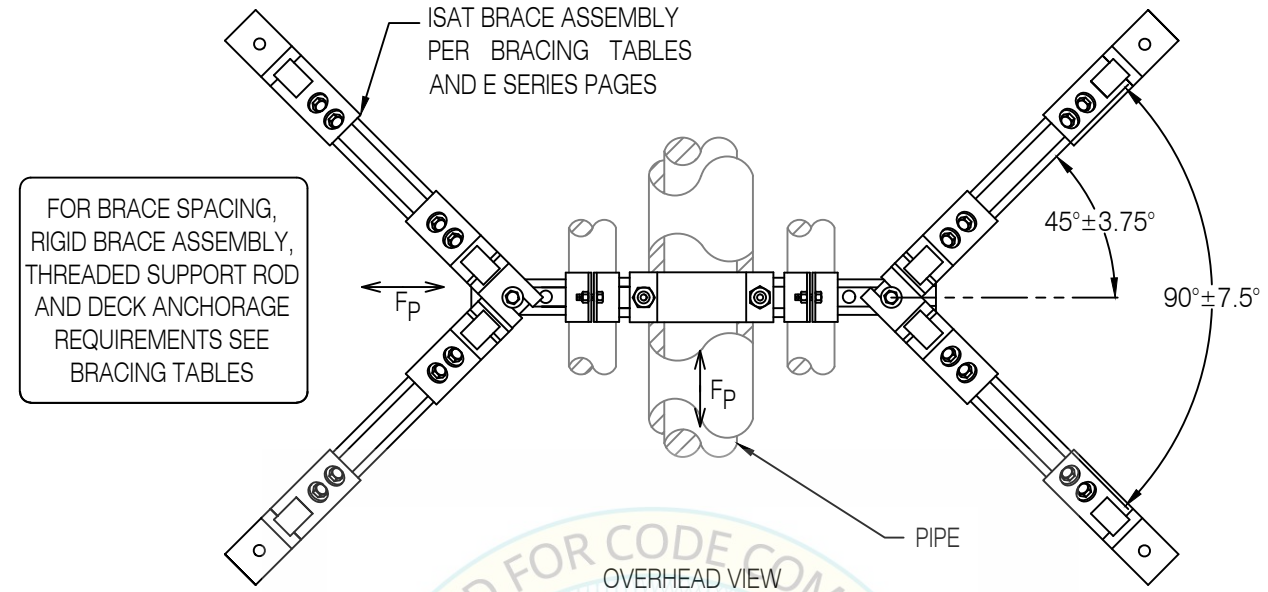

OVERHEAD VIEW

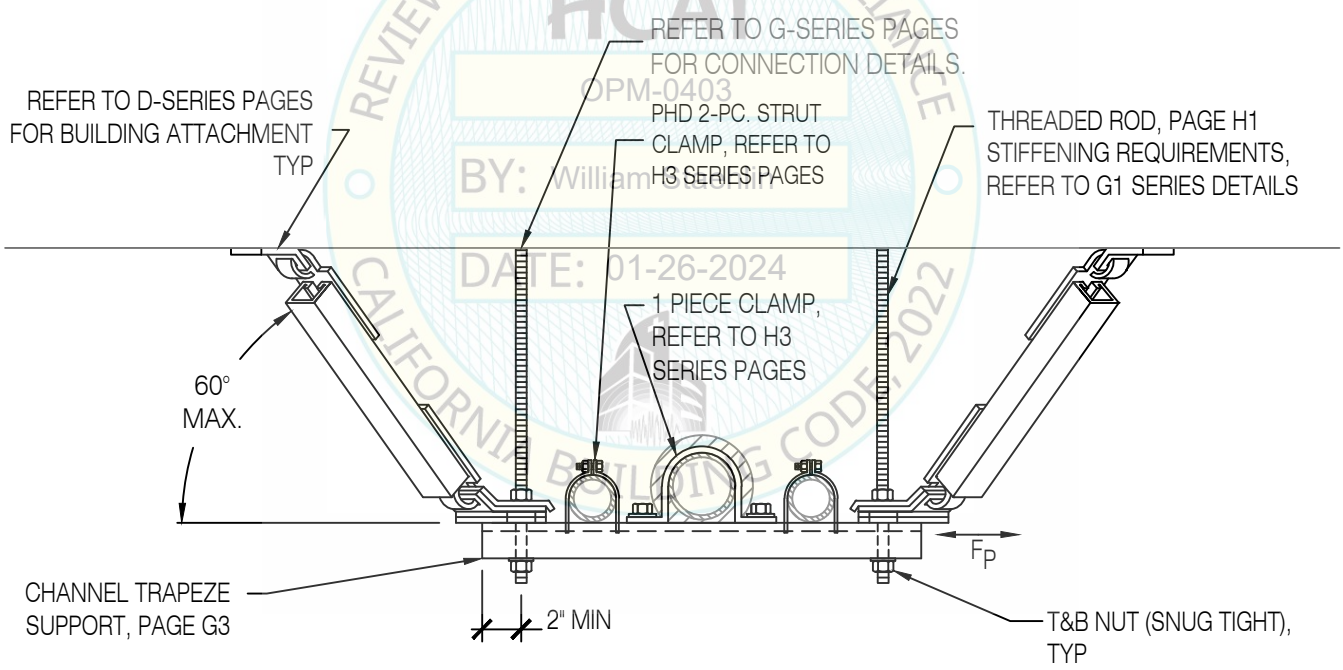

SECTION THRU PIPE TRAPEZE RACK

REVIEWED FOR CODE COMPLIANCE
HCAi
OPM-0403
BY: William Staehlin
DATE: 01-26-2024
CALIFORNIA BUILDING CODE 2022

PIPE TRAPEZE RACK
4-WAY SPLAYED, RIGID BRACING

REGISTERED PROFESSIONAL ENGINEER MARCIN WASAZNIK S-6612 STRUCTURAL STATE OF CALIFORNIA

ISAT
A Division of Tomarco Contractor Specialties
International Seismic Application Technology
14848 Northam Street, La Mirada, CA 90638
877-999-4728 (Toll Free) 714-523-0845 (fax)
www.isatsb.com

Rev. 3
08/25/23
Page
B11.4

FOR BRACE SPACING, RIGID BRACE ASSEMBLY, THREADED SUPPORT ROD AND DECK ANCHORAGE REQUIREMENTS SEE BRACING TABLES

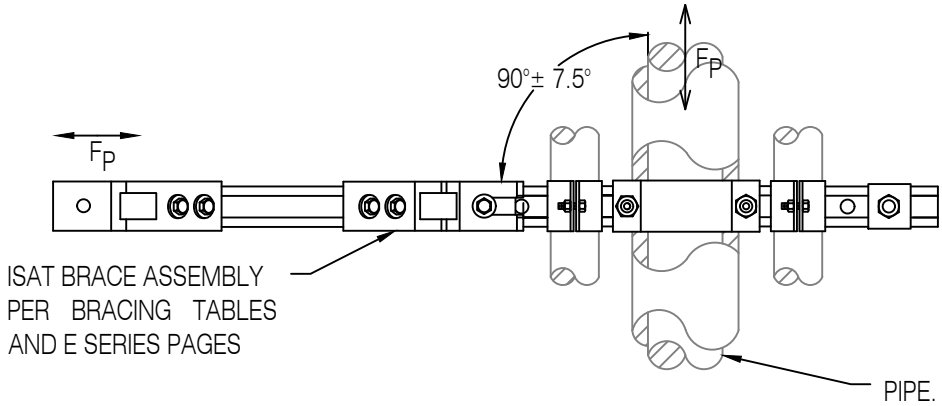

OVERHEAD VIEW

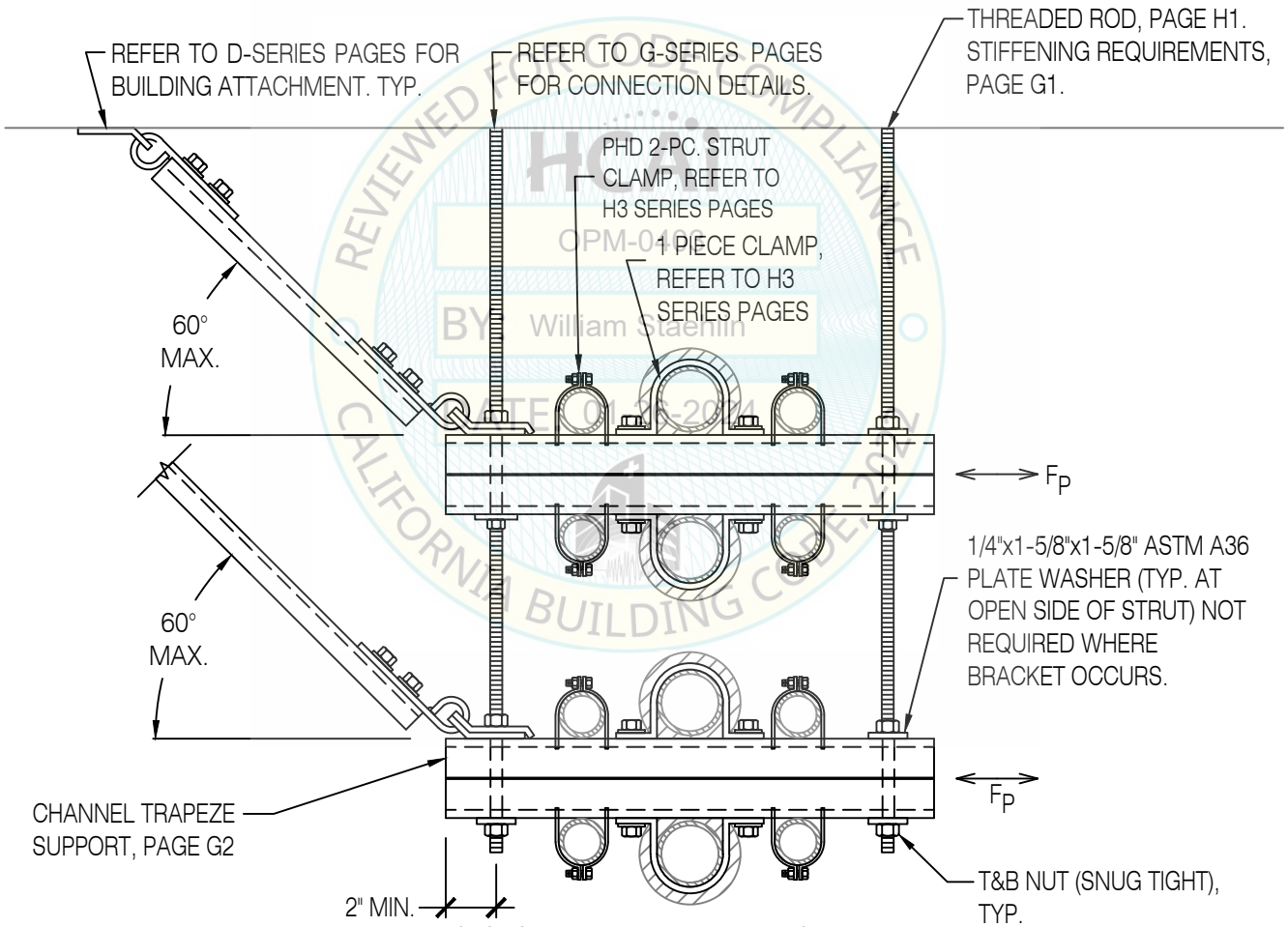

SECTION THRU PIPE TRAPEZE RACK

REVIEWED FOR CODE COMPLIANCE BY William Staehlin DATE 01-26-2024 OPM-0403 CALIFORNIA BUILDING CODE

2-TIERED PIPE TRAPEZE RACK
1-WAY TRANSVERSE, RIGID BRACING

REGISTERED PROFESSIONAL ENGINEER MARCIN WASAZNIK S-6612 STRUCTURAL STATE OF CALIFORNIA

ISAT
A Division of Tomarco Contractor Specialties
International Seismic Application Technology
14848 Northam Street, La Mirada, CA 90638
877-999-4728 (Toll Free) 714-523-0845 (fax)
www.isatsb.com

Rev. 2
06/26/18

Page
B12.0

FOR BRACE SPACING, RIGID BRACE ASSEMBLY, THREADED SUPPORT ROD AND DECK ANCHORAGE REQUIREMENTS SEE BRACING TABLES

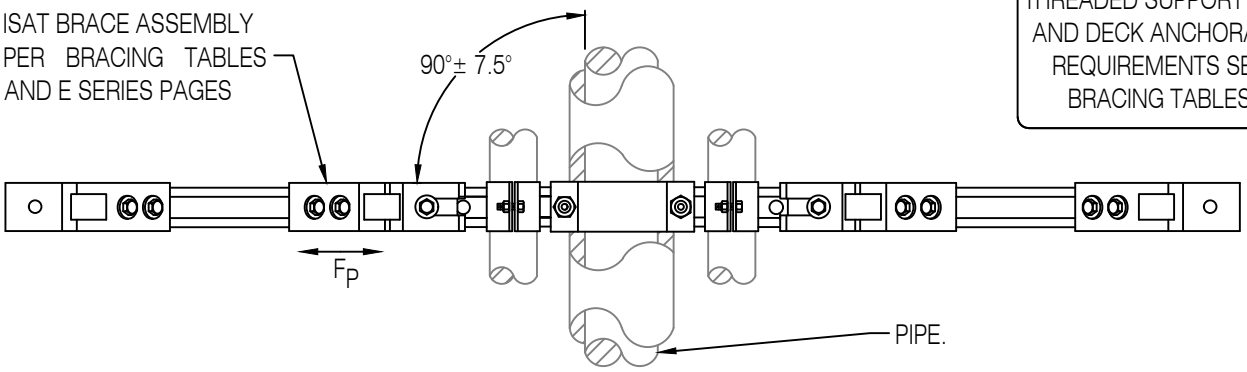

OVERHEAD VIEW

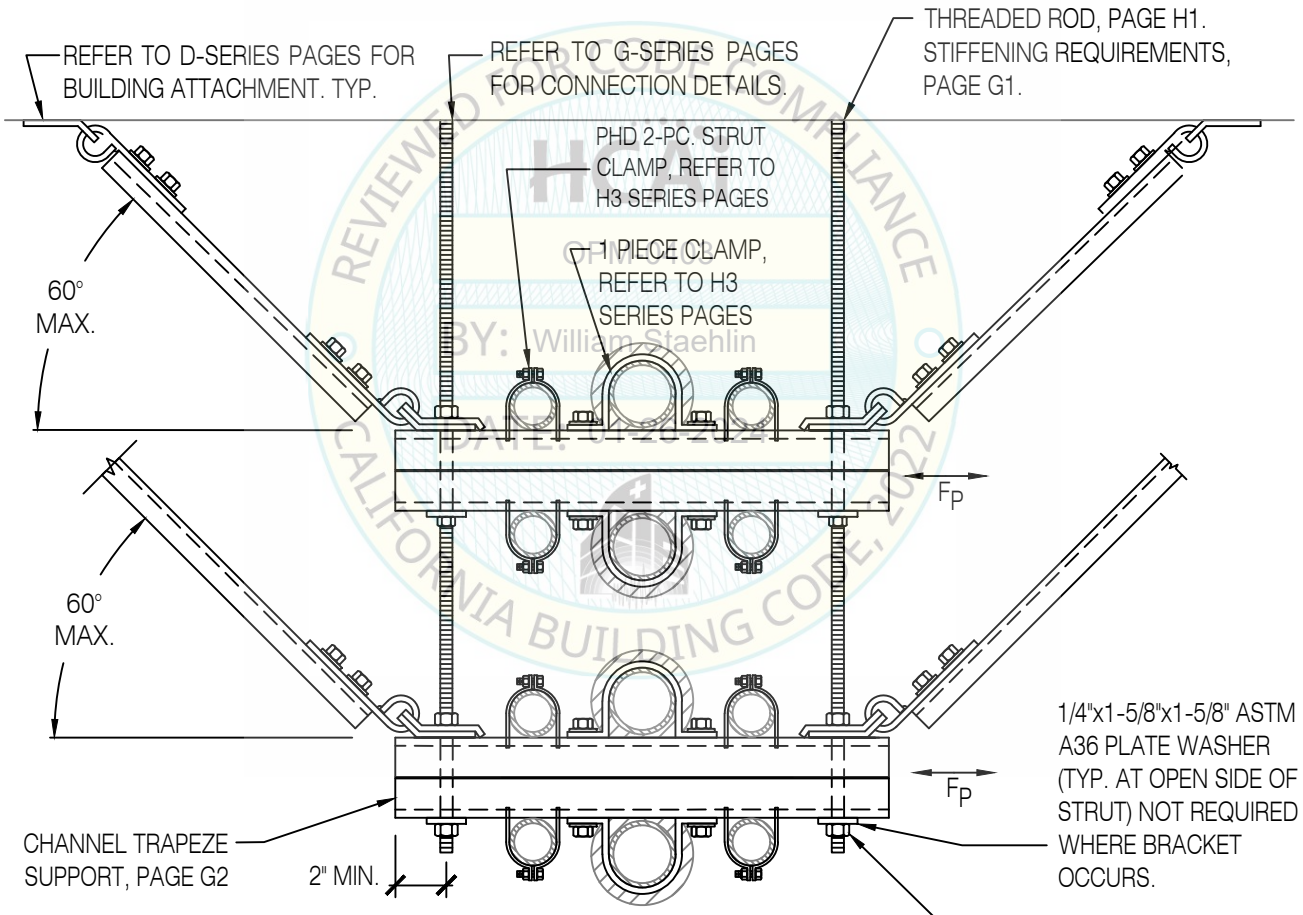

SECTION THRU PIPE TRAPEZE RACK

2-TIERED PIPE TRAPEZE RACK
2-WAY TRANSVERSE, RIGID BRACING

REVIEWED FOR CODE COMPLIANCE
BY: William Staehlin
DATE: 01/26/2024
CALIFORNIA BUILDING CODE, 2022

REGISTERED PROFESSIONAL ENGINEER
MARCIN WASAZNIK
S 6612
STRUCTURAL
STATE OF CALIFORNIA

ISAT
A Division of Tomarco Contractor Specialties

International Seismic Application Technology
14848 Northam Street, La Mirada, CA 90638
877-999-4728 (Toll Free) 714-523-0845 (fax)
www.isatsb.com

Rev. 2
06/26/18

Page
B12.1

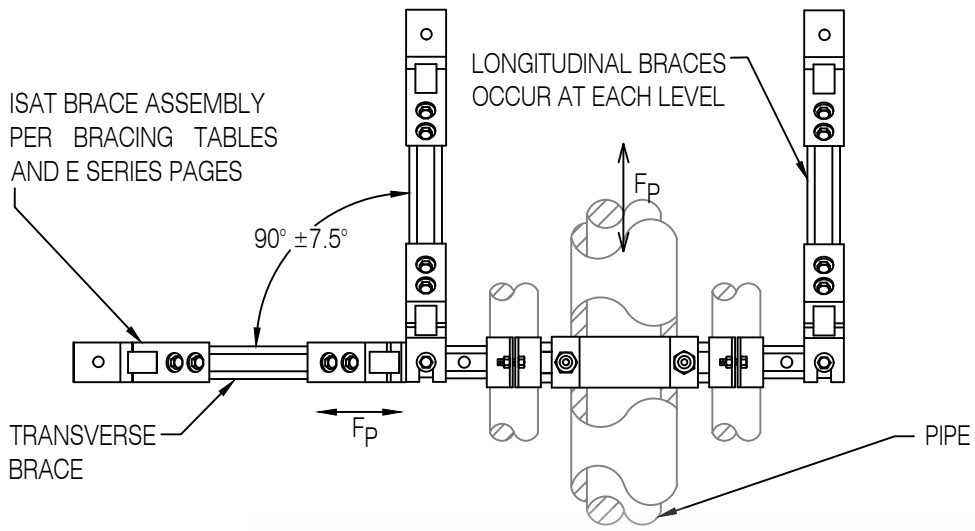

FOR BRACE SPACING, RIGID BRACE ASSEMBLY, THREADED SUPPORT ROD AND DECK ANCHORAGE REQUIREMENTS SEE BRACING TABLES

OVERHEAD VIEW

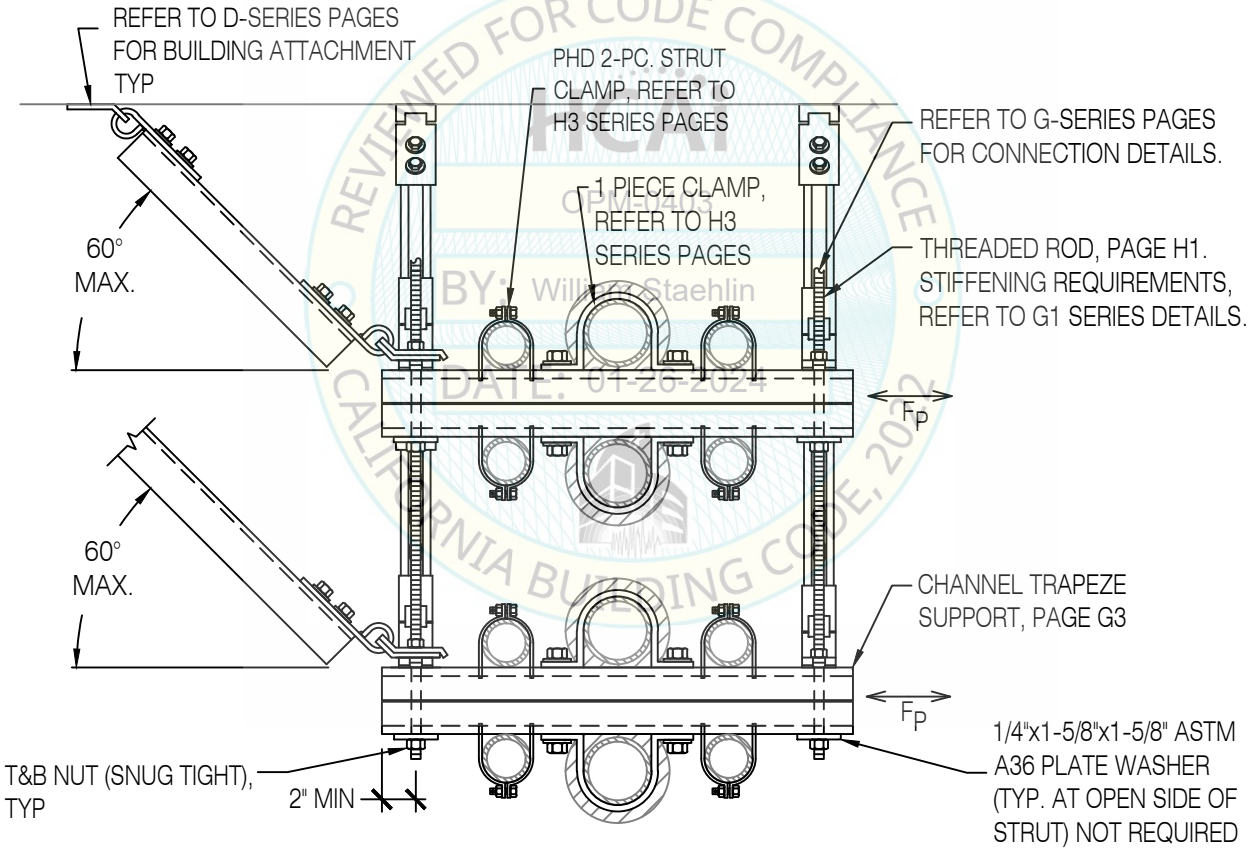

SECTION THRU PIPE TRAPEZE RACK

REVIEWED FOR CODE COMPLIANCE
ICC
OPM-0403
BY: William Staehlin
DATE: 01-26-2024
CALIFORNIA BUILDING CODE, 2022

2-TIERED PIPE TRAPEZE RACK
3-WAY TRANSVERSE-LONGITUDINAL, RIGID BRACING

REGISTERED PROFESSIONAL ENGINEER MARCIN WASAZNIK S-6612 STRUCTURAL STATE OF CALIFORNIA

ISAT
A Division of Tomarco Contractor Specialties
International Seismic Application Technology
14848 Northam Street, La Mirada, CA 90638
877-999-4728 (Toll Free) 714-523-0845 (fax)
www.isatsb.com

Rev. 3
08/25/23

Page
B12.2

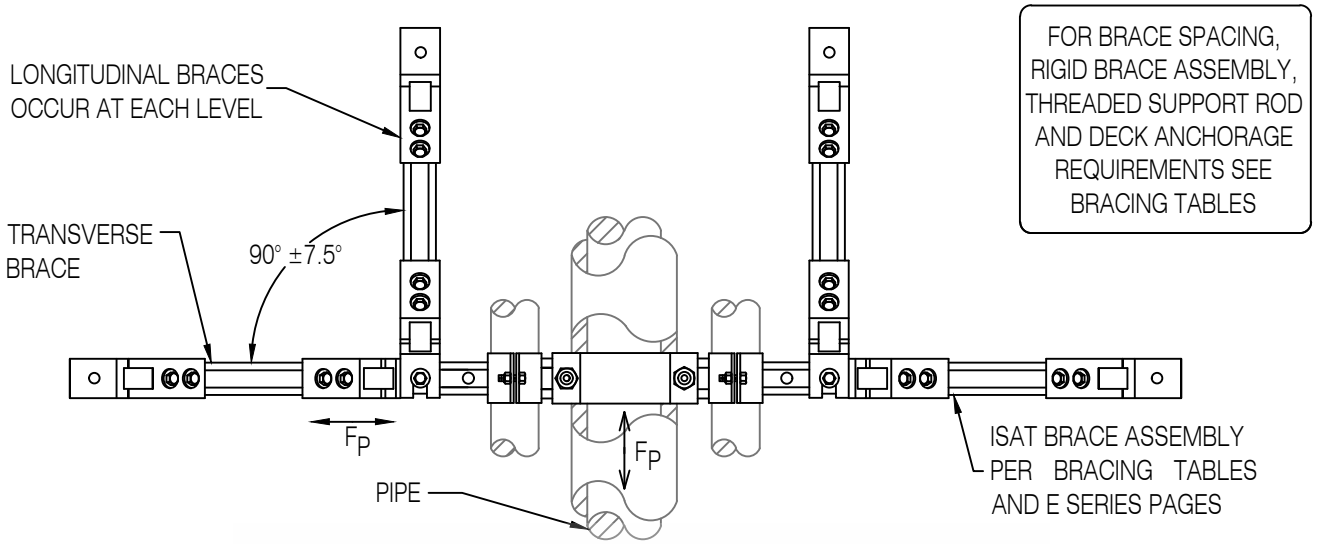

FOR BRACE SPACING, RIGID BRACE ASSEMBLY, THREADED SUPPORT ROD AND DECK ANCHORAGE REQUIREMENTS SEE BRACING TABLES

OVERHEAD VIEW

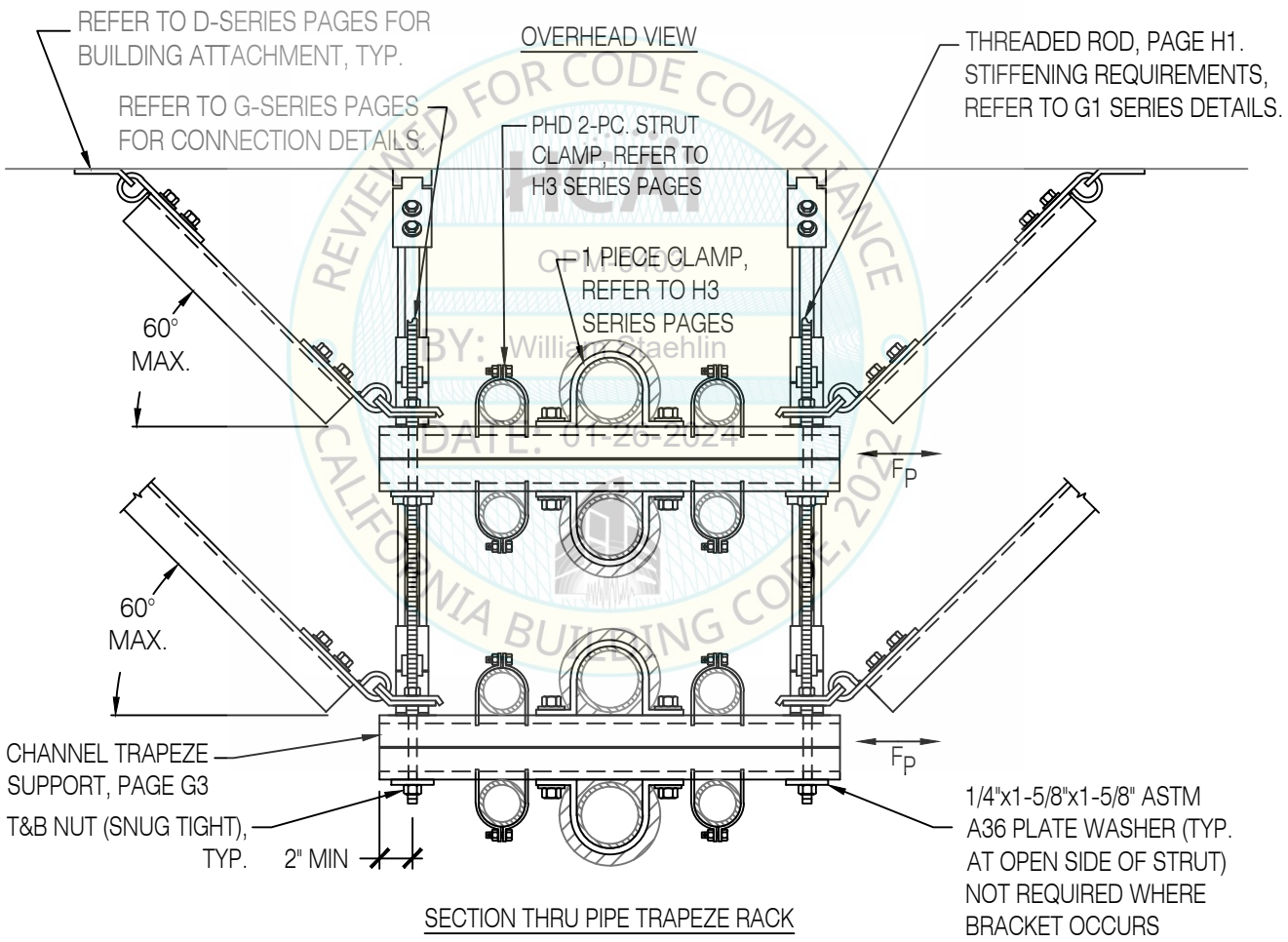

SECTION THRU PIPE TRAPEZE RACK

REVIEWED FOR CODE COMPLIANCE
OPM-0403
BY: William Staehlin
DATE: 01-26-2024
CALIFORNIA BUILDING CODE, 2022

2-TIERED PIPE TRAPEZE RACK
4-WAY TRANSVERSE-LONGITUDINAL, RIGID BRACING

REGISTERED PROFESSIONAL ENGINEER MARCIN WASAZNIK S-6612 STRUCTURAL STATE OF CALIFORNIA

ISAT
A Division of Tomarco Contractor Specialties
International Seismic Application Technology
14848 Northam Street, La Mirada, CA 90638
877-999-4728 (Toll Free) 714-523-0845 (fax)
www.isatsb.com

Rev. 3
08/28/23

Page
B12.3

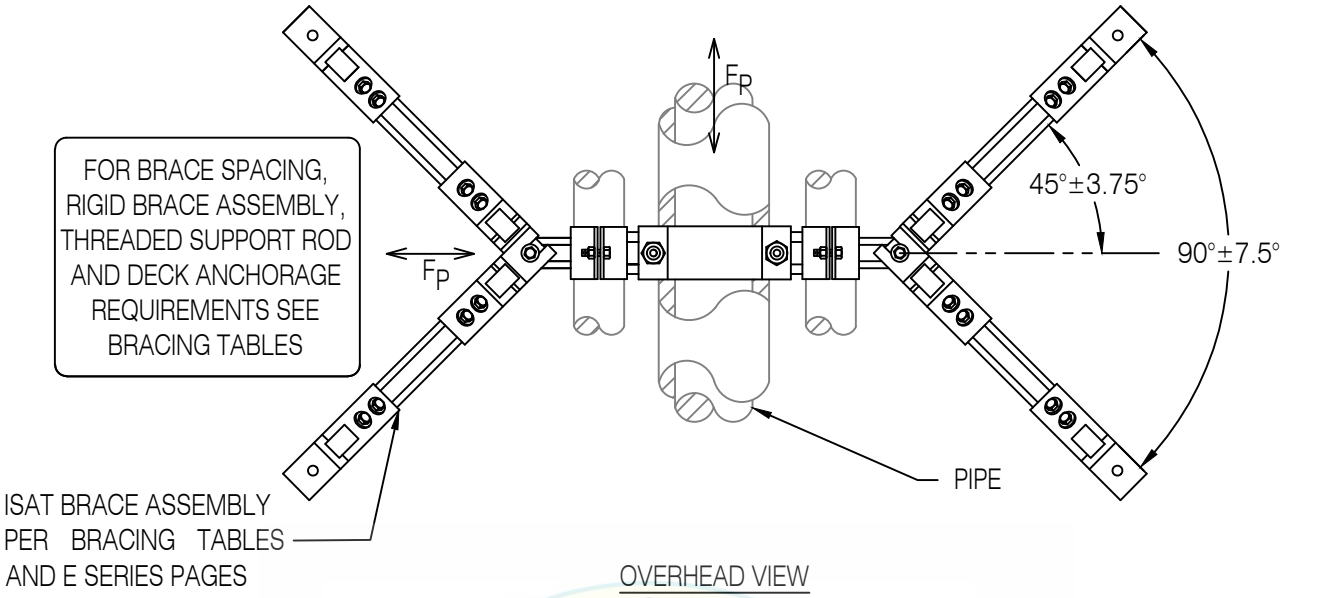

OVERHEAD VIEW

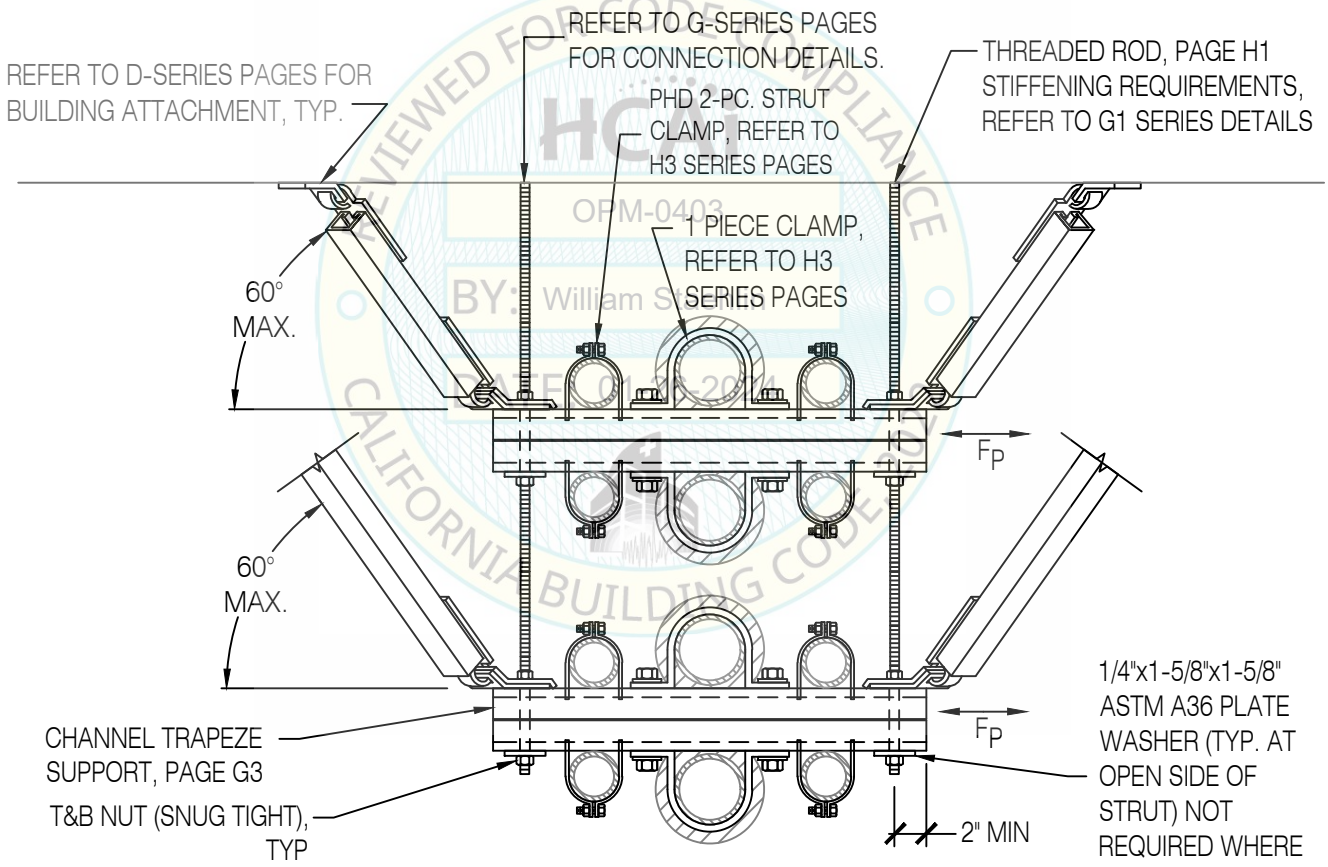

SECTION THRU PIPE TRAPEZE RACK

REVIEWED FOR CODE COMPLIANCE
HCAI
OPM-0403
BY: William Staehlin
DATE: 01/26/2024
CALIFORNIA BUILDING CODE

2-TIERED PIPE TRAPEZE RACK
4-WAY SPLAYED, RIGID BRACING

REGISTERED PROFESSIONAL ENGINEER
MARCIN WASAZNIK
S 6612
STRUCTURAL
STATE OF CALIFORNIA

ISAT
A Division of Tomarco Contractor Specialties
International Seismic Application Technology
14848 Northam Street, La Mirada, CA 90638
877-999-4728 (Toll Free) 714-523-0845 (fax)
www.isatsb.com

Rev. 3
08/28/23

Page
B12.4

FOR BRACE SPACING, RIGID BRACE ASSEMBLY, THREADED SUPPORT ROD AND DECK ANCHORAGE REQUIREMENTS SEE BRACING TABLES

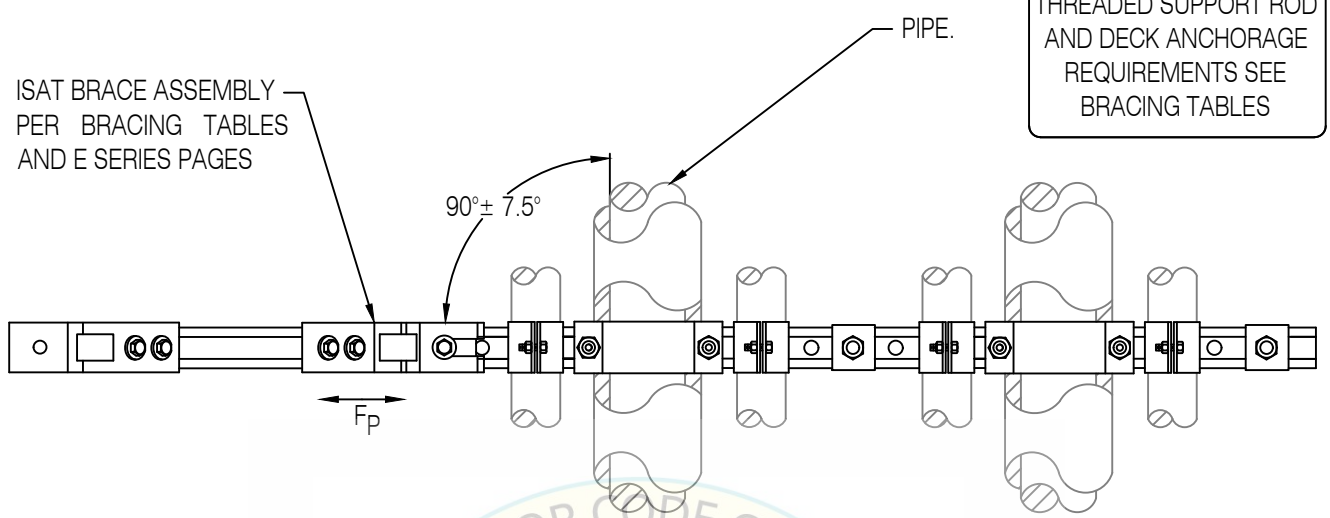

OVERHEAD VIEW

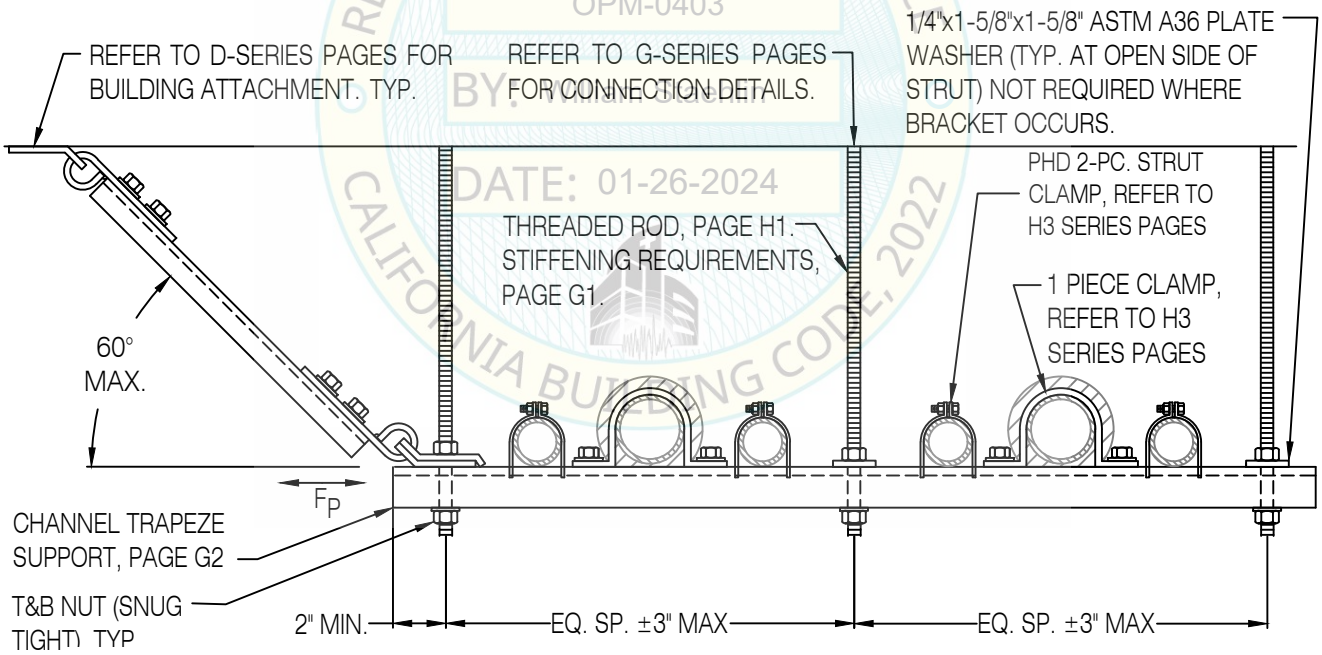

SECTION THRU PIPE TRAPEZE RACK

REVIEWED FOR CODE COMPLIANCE
HCAI
OPM-0403
BY: William Staehlin
DATE: 01-26-2024
CALIFORNIA BUILDING CODE, 2022

3-ROD PIPE TRAPEZE RACK
1-WAY TRANSVERSE, RIGID BRACING

REGISTERED PROFESSIONAL ENGINEER MARCIN WASAZNIK S-6612 STRUCTURAL STATE OF CALIFORNIA

ISAT
A Division of Tomarco Contractor Specialties
International Seismic Application Technology
14848 Northam Street, La Mirada, CA 90638
877-999-4728 (Toll Free) 714-523-0845 (fax)
www.isatsb.com

Rev. 2
06/26/18

Page
B13.0

FOR BRACE SPACING, RIGID BRACE ASSEMBLY, THREADED SUPPORT ROD AND DECK ANCHORAGE REQUIREMENTS SEE BRACING TABLES

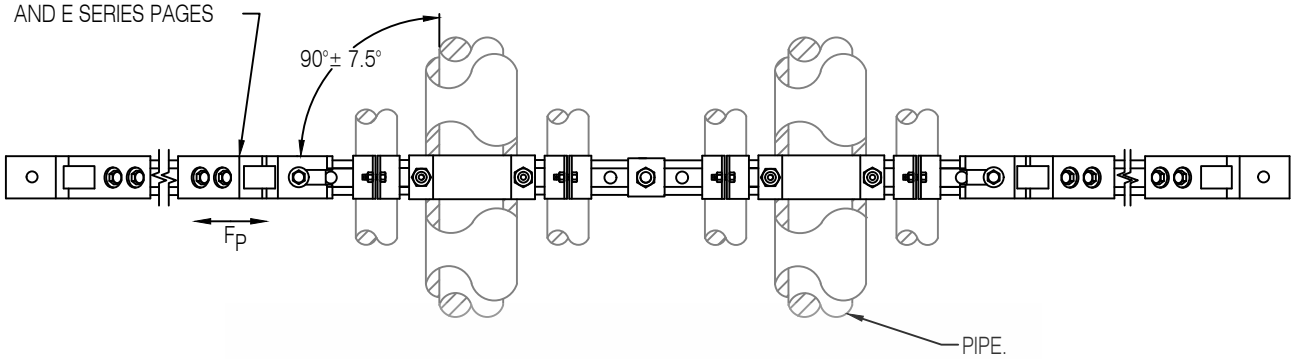

OVERHEAD VIEW

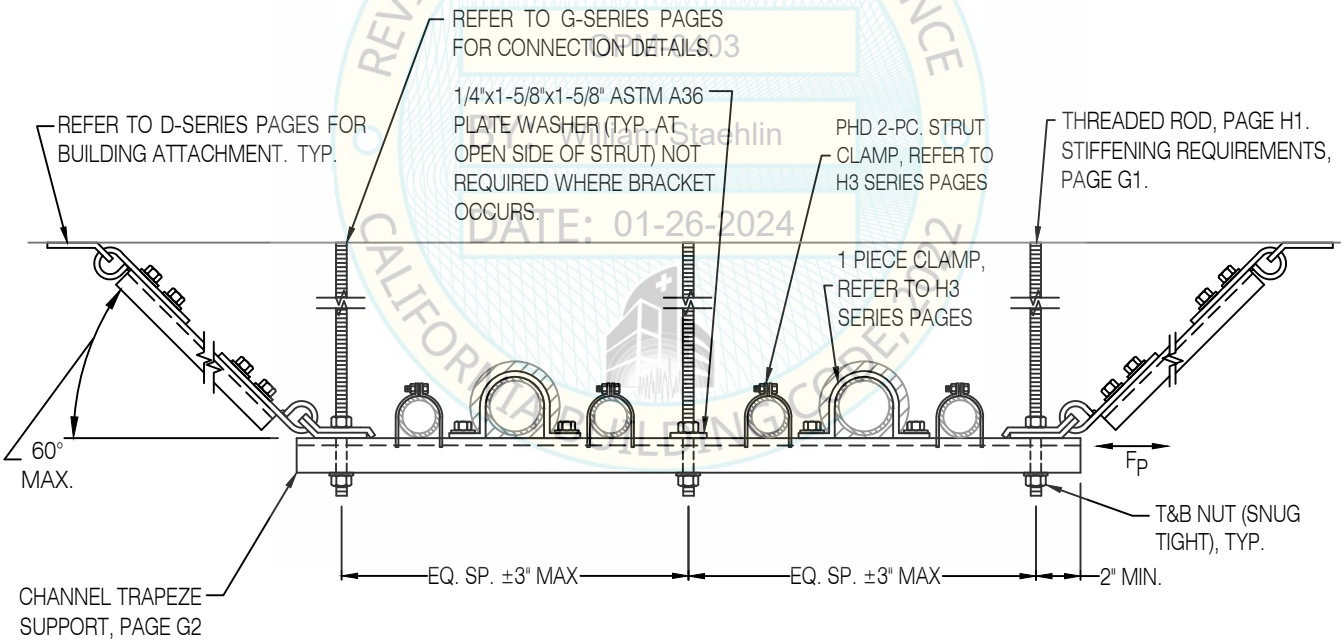

SECTION THRU PIPE TRAPEZE RACK

REVIEWED FOR CODE COMPLIANCE
HCAi
OPM-0403
By: William Staehlin
DATE: 01-26-2024
CALIFORNIA BUILDING CODE, 2022

3-ROD PIPE TRAPEZE RACK
2-WAY TRANSVERSE, RIGID BRACING

REGISTERED PROFESSIONAL ENGINEER MARCIN WASAZNIK S-6612 STRUCTURAL STATE OF CALIFORNIA

ISAT
A Division of Tomarco Contractor Specialties
International Seismic Application Technology
14848 Northam Street, La Mirada, CA 90638
877-999-4728 (Toll Free) 714-523-0845 (fax)
www.isatsb.com

Rev. 2
06/26/18

Page
B13.1

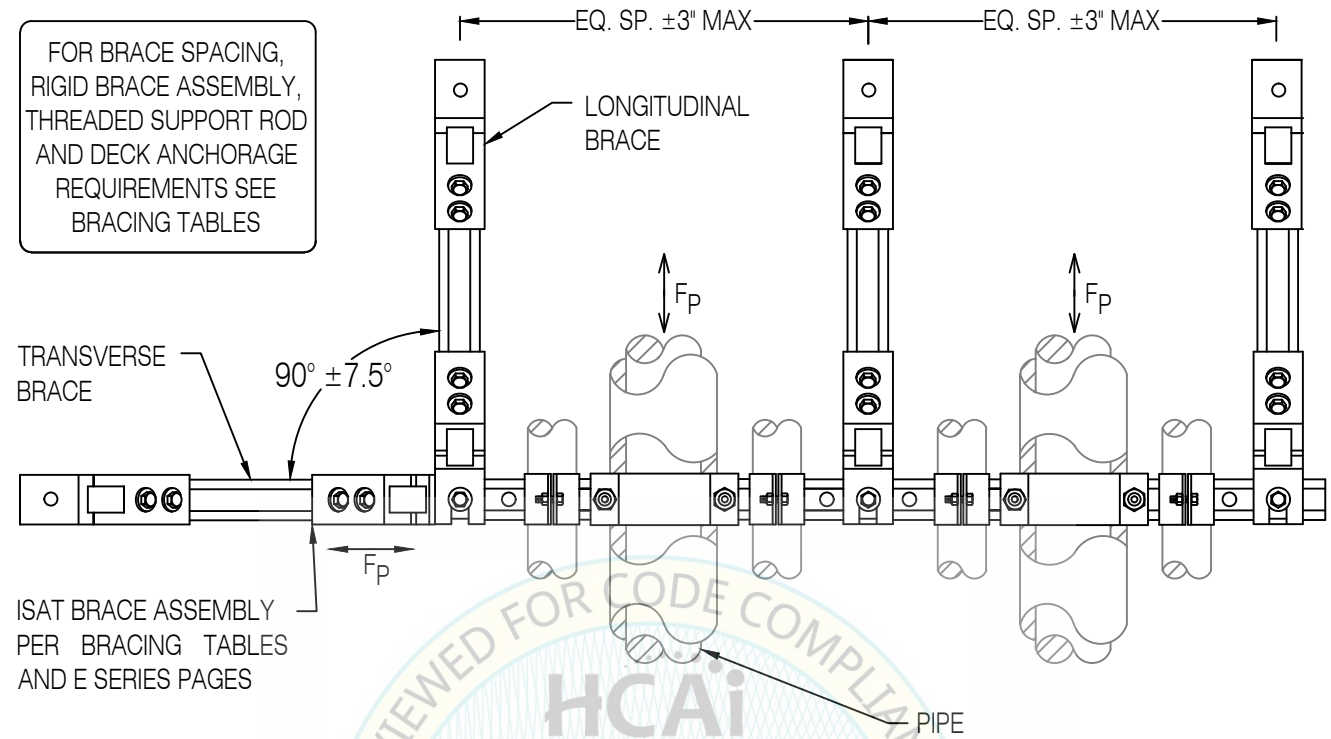

OVERHEAD VIEW

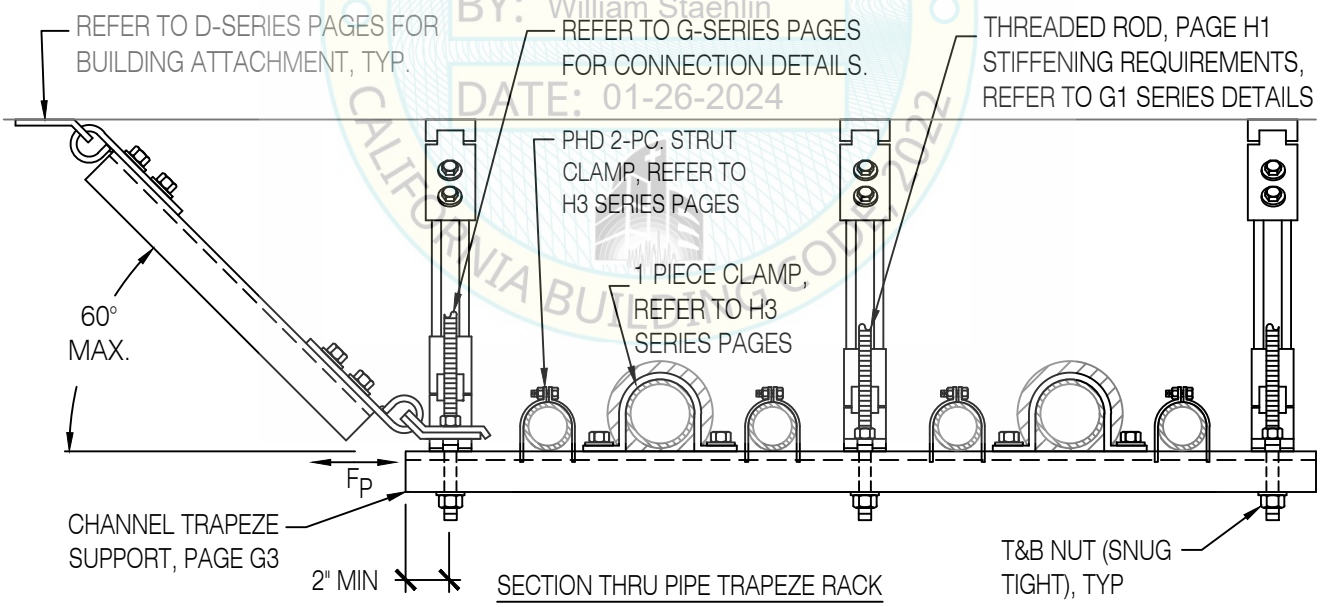

SECTION THRU PIPE TRAPEZE RACK

HCAi
OPM-0403
BY: William Staehlin
DATE: 01-26-2024
REVIEWED FOR CODE COMPLIANCE
CALIFORNIA BUILDING CODE 2022

3-ROD PIPE TRAPEZE RACK
4-WAY TRANSVERSE-LONGITUDINAL, RIGID BRACING

REGISTERED PROFESSIONAL ENGINEER MARCIN WASAZNIK S-6612 STRUCTURAL STATE OF CALIFORNIA

ISAT
A Division of Tomarco Contractor Specialties
International Seismic Application Technology
14848 Northam Street, La Mirada, CA 90638
877-999-4728 (Toll Free) 714-523-0845 (fax)
www.isatsb.com

Rev. 3
08/28/23

Page
B13.2

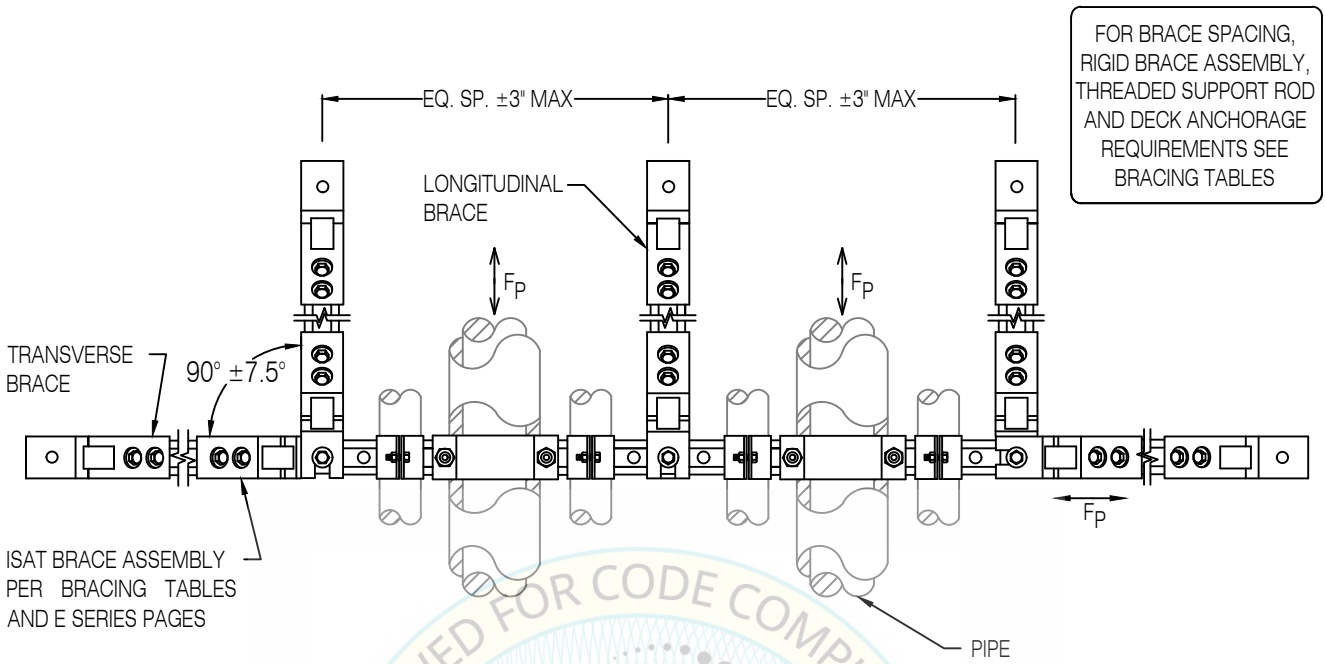

OVERHEAD VIEW

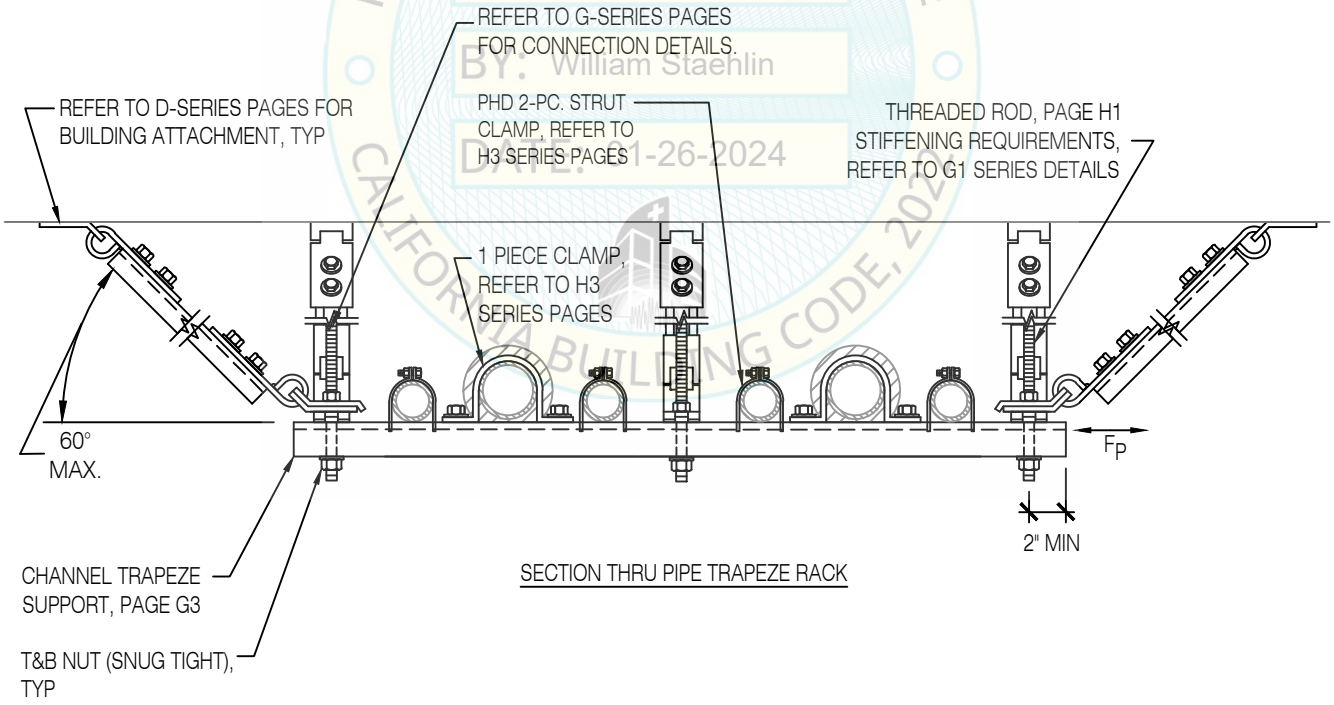

SECTION THRU PIPE TRAPEZE RACK

REVIEWED FOR CODE COMPLIANCE
HCAi
OPM-0403
BY: William Staehlin
DATE: 01-26-2024
CALIFORNIA BUILDING CODE, 2022

3-ROD PIPE TRAPEZE RACK
5-WAY TRANSVERSE-LONGITUDINAL, RIGID BRACING

REGISTERED PROFESSIONAL ENGINEER MARCIN WASAZNIK S-6612 STRUCTURAL STATE OF CALIFORNIA

ISAT
A Division of Tomarco Contractor Specialties
International Seismic Application Technology
14848 Northam Street, La Mirada, CA 90638
877-999-4728 (Toll Free) 714-523-0845 (fax)
www.isatsb.com

Rev. 4
08/28/23

Page
B13.3

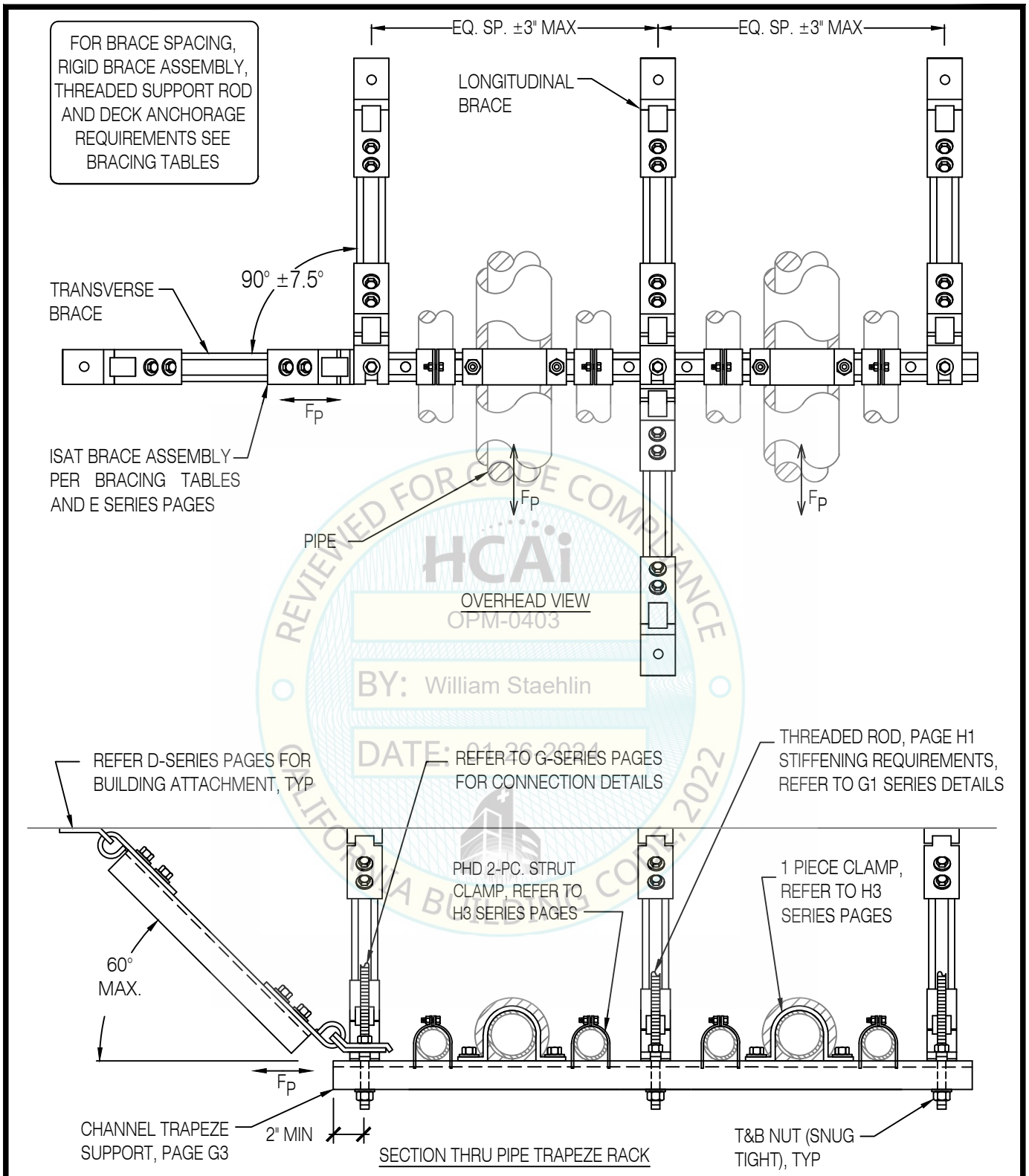

REVIEWED FOR CODE COMPLIANCE
HCAi
OPM-0403
BY: William Staehlin
DATE: 01-26-2024
CALIFORNIA BUILDING CODE, 2022

3-ROD PIPE TRAPEZE RACK
5-WAY TRANSVERSE-LONGITUDINAL, RIGID BRACING

REGISTERED PROFESSIONAL ENGINEER MARCIN WASAZNIK S-6612 STRUCTURAL STATE OF CALIFORNIA

ISAT
A Division of Tomarco Contractor Specialties

International Seismic Application Technology
14848 Northam Street, La Mirada, CA 90638
877-999-4728 (Toll Free) 714-523-0845 (fax)
www.isatsb.com

Rev. 3
08/28/23

Page
B13.4

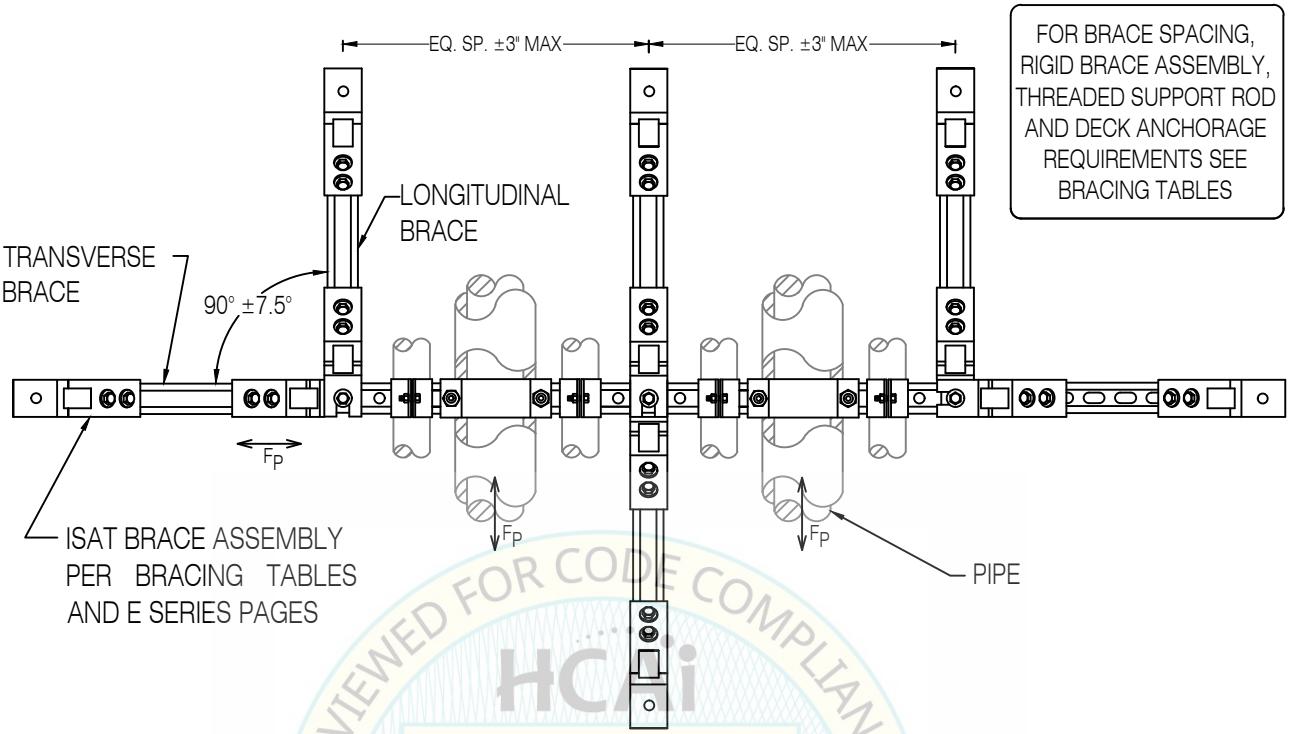

OVERHEAD VIEW

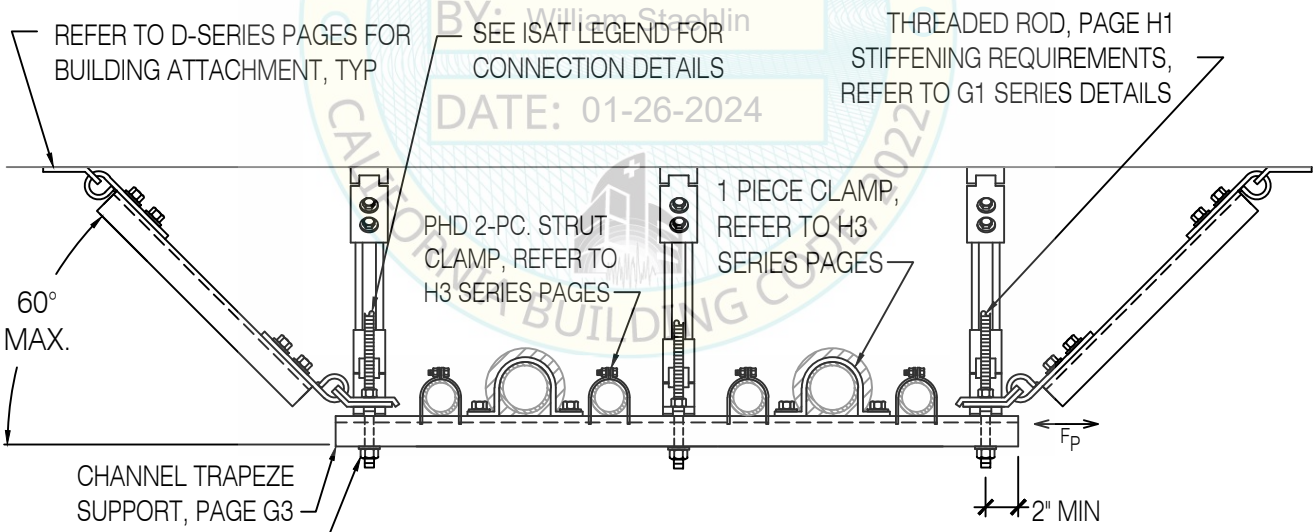

SECTION THRU PIPE TRAPEZE RACK

REVIEWED FOR CODE COMPLIANCE
HCAi
OPM-0403
BY: William Staehlin
DATE: 01-26-2024
CALIFORNIA BUILDING CODE 2022

3-ROD PIPE TRAPEZE RACK
6-WAY TRANSVERSE-LONGITUDINAL, RIGID BRACING

REGISTERED PROFESSIONAL ENGINEER MARCIN WASAZNIK S-6612 STRUCTURAL STATE OF CALIFORNIA

ISAT
A Division of Tomarco Contractor Specialties
International Seismic Application Technology
14848 Northam Street, La Mirada, CA 90638
877-999-4728 (Toll Free) 714-523-0845 (fax)
www.isatsb.com

Rev. 3
08/28/23

Page
B13.5

FOR BRACE SPACING, RIGID BRACE ASSEMBLY, THREADED SUPPORT ROD AND DECK ANCHORAGE REQUIREMENTS SEE BRACING TABLES

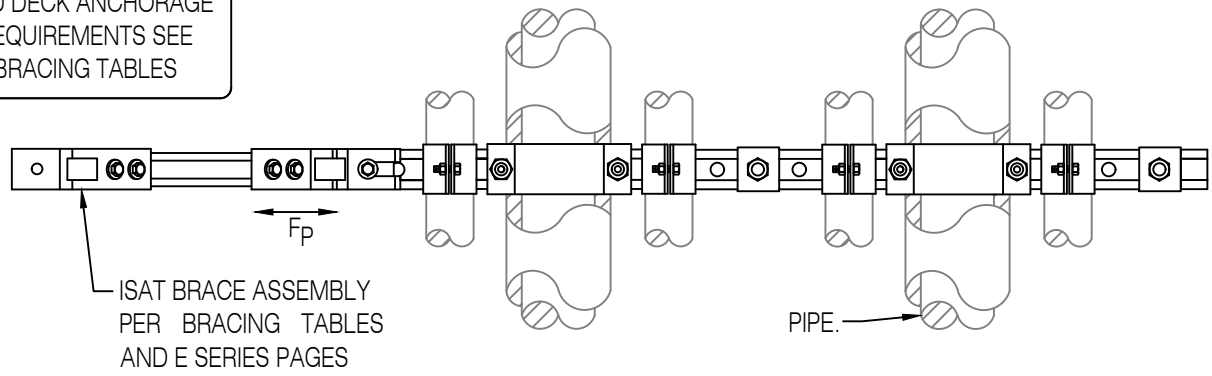

OVERHEAD VIEW

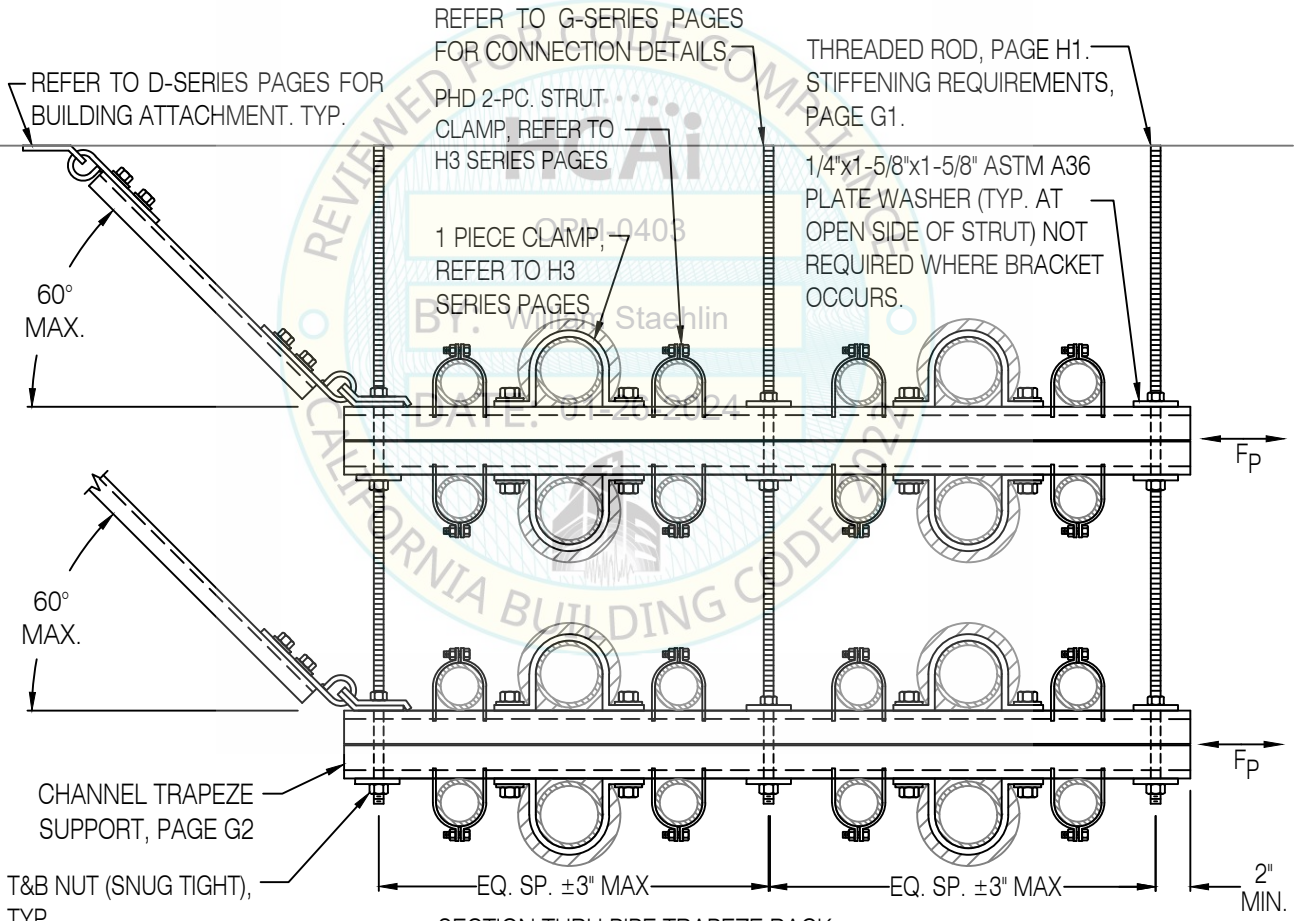

SECTION THRU PIPE TRAPEZE RACK

REVIEWED FOR CODE COMPLIANCE
OPM-0403
BY: William Staehlin
DATE: 01/26/2024
CALIFORNIA BUILDING CODE 2022

3-ROD, 2-TIERED PIPE TRAPEZE RACK
1-WAY TRANSVERSE, RIGID BRACING

REGISTERED PROFESSIONAL ENGINEER
MARCIN WASAZNIK
S-6612
STRUCTURAL
STATE OF CALIFORNIA

ISAT
A Division of Tomarco Contractor Specialties

International Seismic Application Technology
14848 Northam Street, La Mirada, CA 90638
877-999-4728 (Toll Free) 714-523-0845 (fax)
www.isatsb.com

Rev. 3
06/26/18

Page
B14.0

FOR BRACE SPACING, RIGID BRACE ASSEMBLY, THREADED SUPPORT ROD AND DECK ANCHORAGE REQUIREMENTS SEE BRACING TABLES

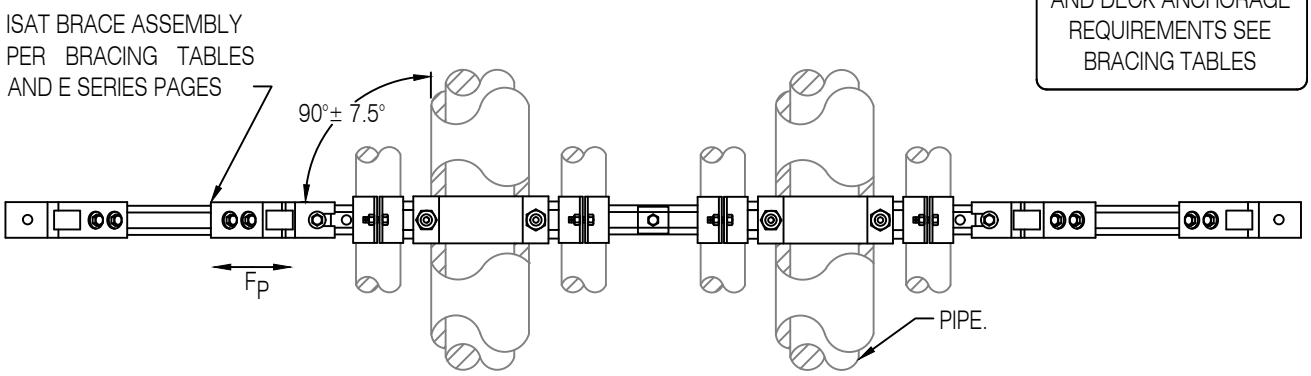

OVERHEAD VIEW

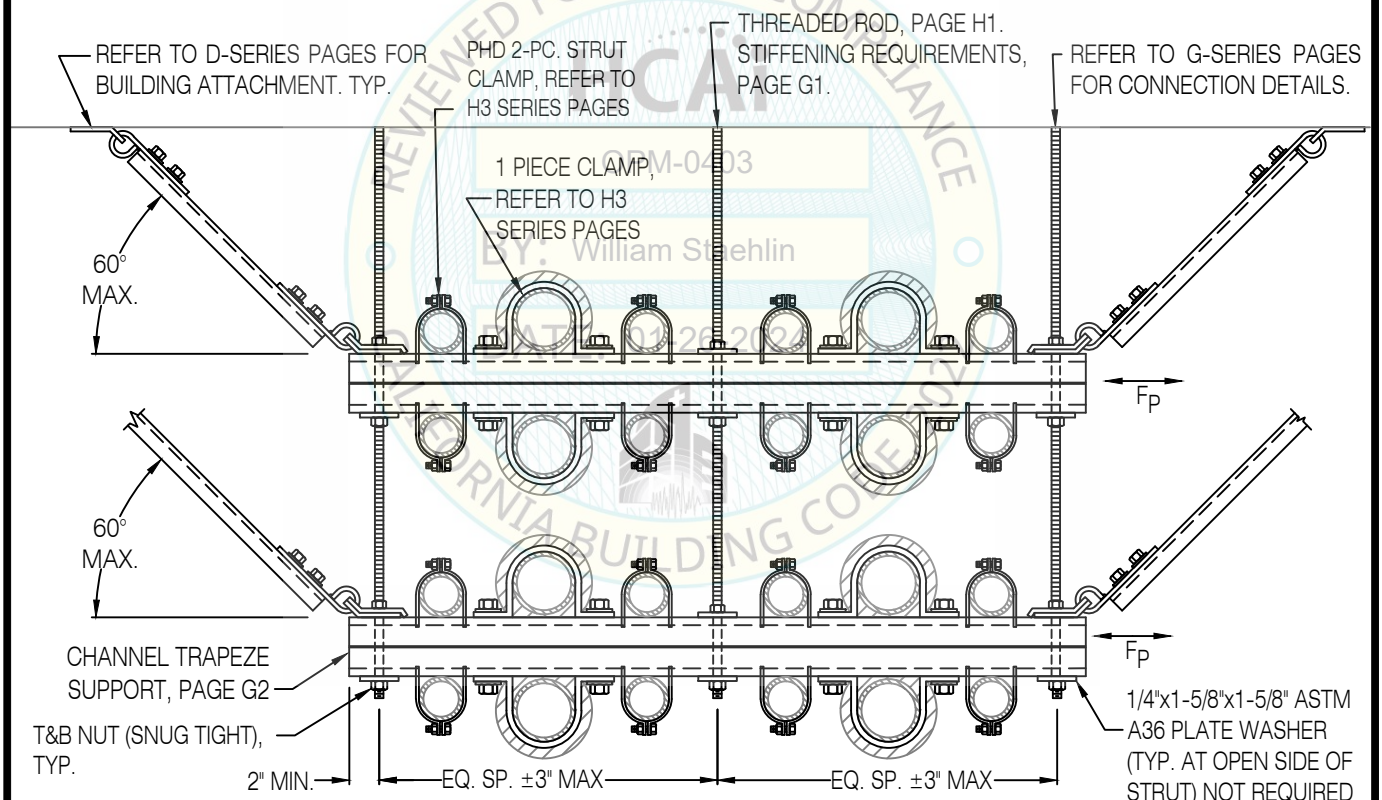

SECTION THRU PIPE TRAPEZE RACK

REVIEWED FOR CODE COMPLIANCE
OPM-0403
BY: William Staehlin
DATE: 01-26-2024
CALIFORNIA BUILDING CODE

3-ROD, 2-TIERED PIPE TRAPEZE RACK
2-WAY TRANSVERSE, RIGID BRACING

REGISTERED PROFESSIONAL ENGINEER MARCIN WASAZNIK S-6612 STRUCTURAL STATE OF CALIFORNIA

ISAT
A Division of Tomarco Contractor Specialties

International Seismic Application Technology
14848 Northam Street, La Mirada, CA 90638
877-999-4728 (Toll Free) 714-523-0845 (fax)
www.isatsb.com

Rev. 3
06/26/18

Page
B14.1

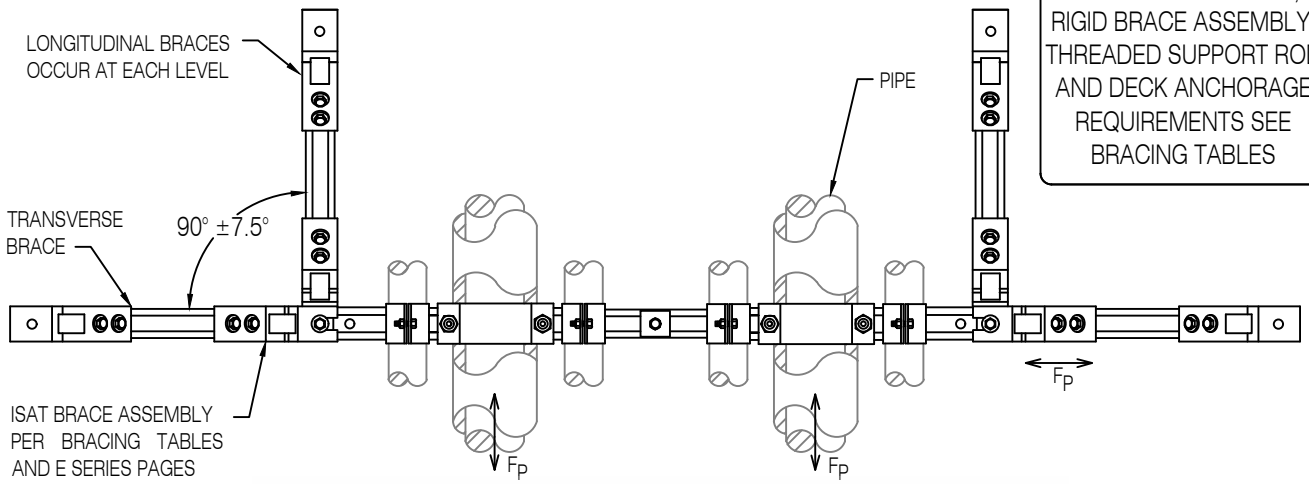

OVERHEAD VIEW

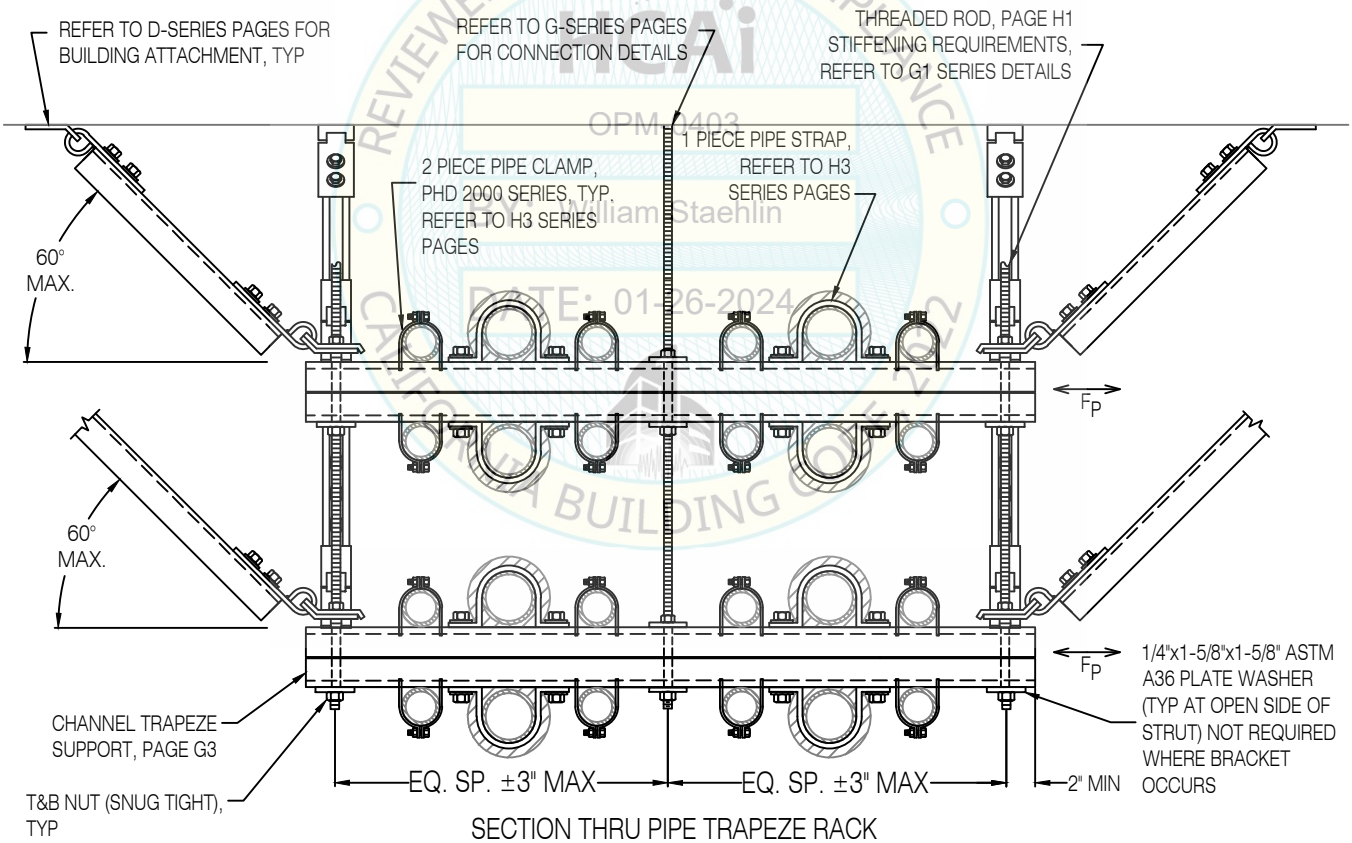

SECTION THRU PIPE TRAPEZE RACK

REVIEWED FOR CODE COMPLIANCE
OPM-0403
William Staehlin
DATE: 01-26-2024
CALIFORNIA BUILDING CODE

3-ROD, 2-TIERED PIPE TRAPEZE RACK
4-WAY TRANSVERSE-LONGITUDINAL, RIGID BRACING

REGISTERED PROFESSIONAL ENGINEER MARCIN WASAZNIK S-6612 STRUCTURAL STATE OF CALIFORNIA

ISAT
A Division of Tomarco Contractor Specialties
International Seismic Application Technology
14848 Northam Street, La Mirada, CA 90638
877-999-4728 (Toll Free) 714-523-0845 (fax)
www.isatsb.com

Rev. 4
08/28/23

Page
B14.2

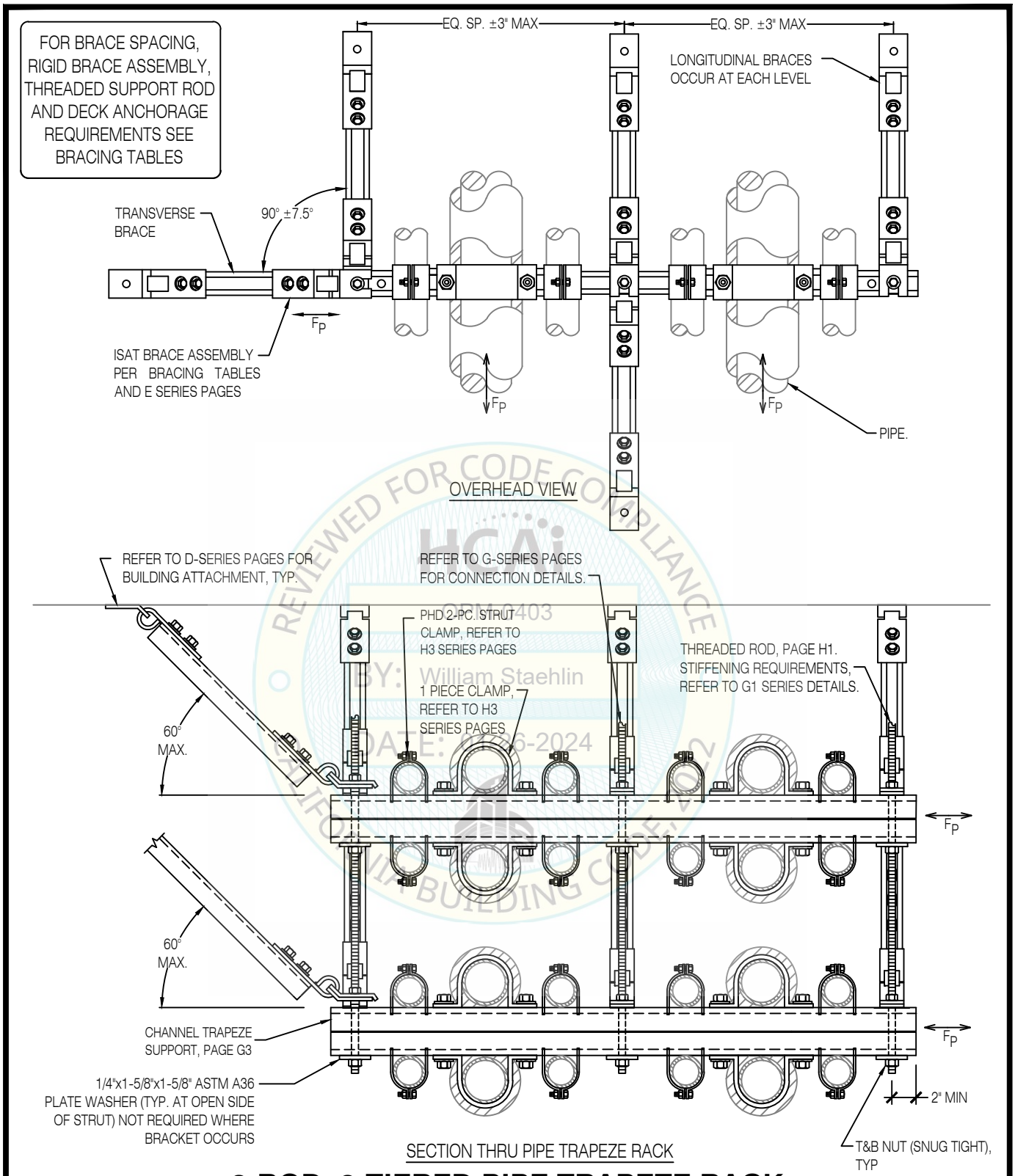

REVIEWED FOR CODE COMPLIANCE
HCAi
OPM-0403
BY: William Staehlin
DATE: 01-26-2024
CALIFORNIA BUILDING CODE

3-ROD, 2-TIERED PIPE TRAPEZE RACK
5-WAY TRANSVERSE-LONGITUDINAL, RIGID BRACING

REGISTERED PROFESSIONAL ENGINEER MARCIN WASAZNIK S-6612 STRUCTURAL STATE OF CALIFORNIA

ISAT
A Division of Tomarco Contractor Specialties
International Seismic Application Technology
14848 Northam Street, La Mirada, CA 90638
877-999-4728 (Toll Free) 714-523-0845 (fax)
www.isatsb.com

Rev. 4
08/28/23

Page
B14.3

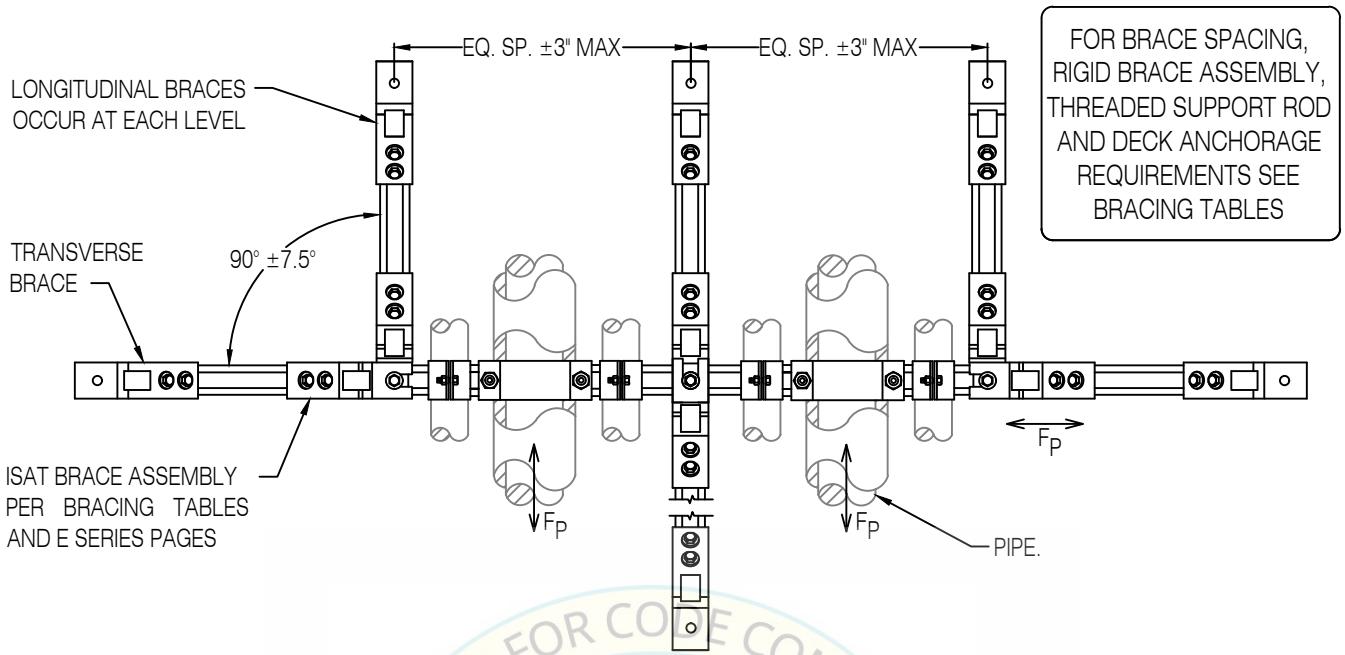

OVERHEAD VIEW

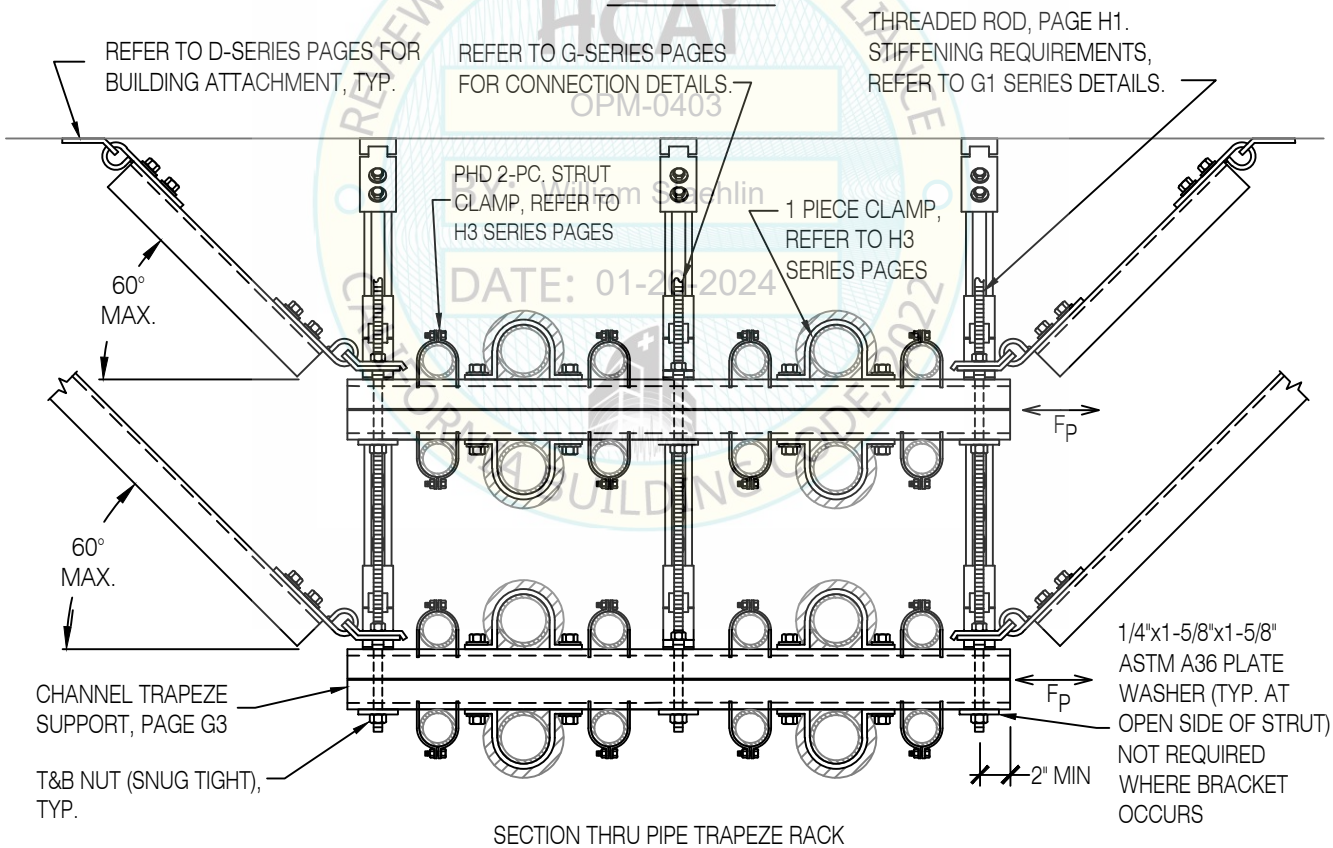

SECTION THRU PIPE TRAPEZE RACK

3-ROD, 2-TIERED PIPE TRAPEZE RACK
6-WAY TRANSVERSE-LONGITUDINAL, RIGID BRACING

REVIEWED FOR CODE COMPLIANCE
HCAI
OPM-0403
Reviewed by: William Staehlin
DATE: 01-26-2024
CALIFORNIA BUILDING CODES

REGISTERED PROFESSIONAL ENGINEER
MARCIN WASAZNIK
S-6612
STRUCTURAL
STATE OF CALIFORNIA

ISAT
A Division of Tomarco Contractor Specialties
International Seismic Application Technology
14848 Northam Street, La Mirada, CA 90638
877-999-4728 (Toll Free) 714-523-0845 (fax)
www.isatsb.com

Rev. 4
08/29/23

Page
B14.4

FOR BRACE SPACING, CABLE BRACE ASSEMBLY, THREADED SUPPORT ROD AND DECK ANCHORAGE REQUIREMENTS SEE BRACING TABLES

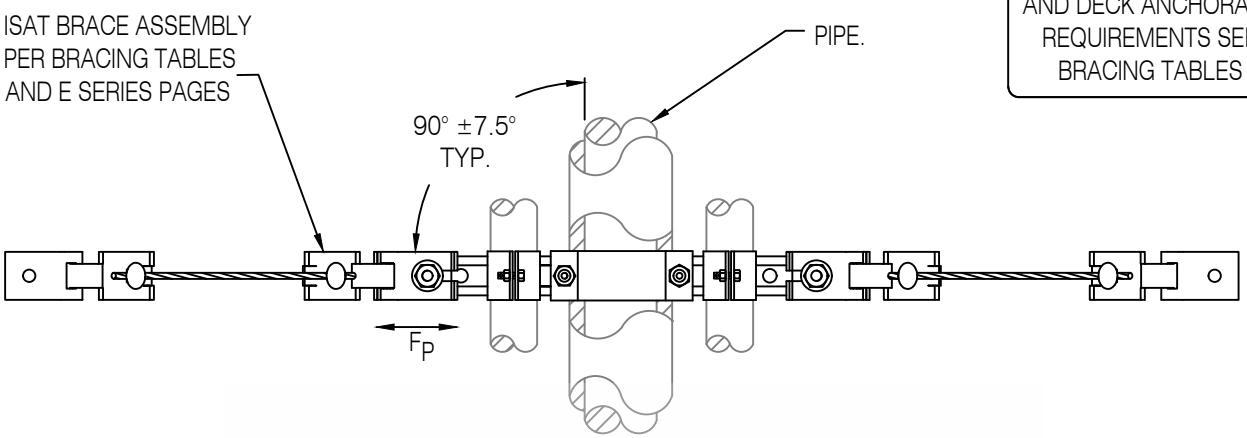

OVERHEAD VIEW

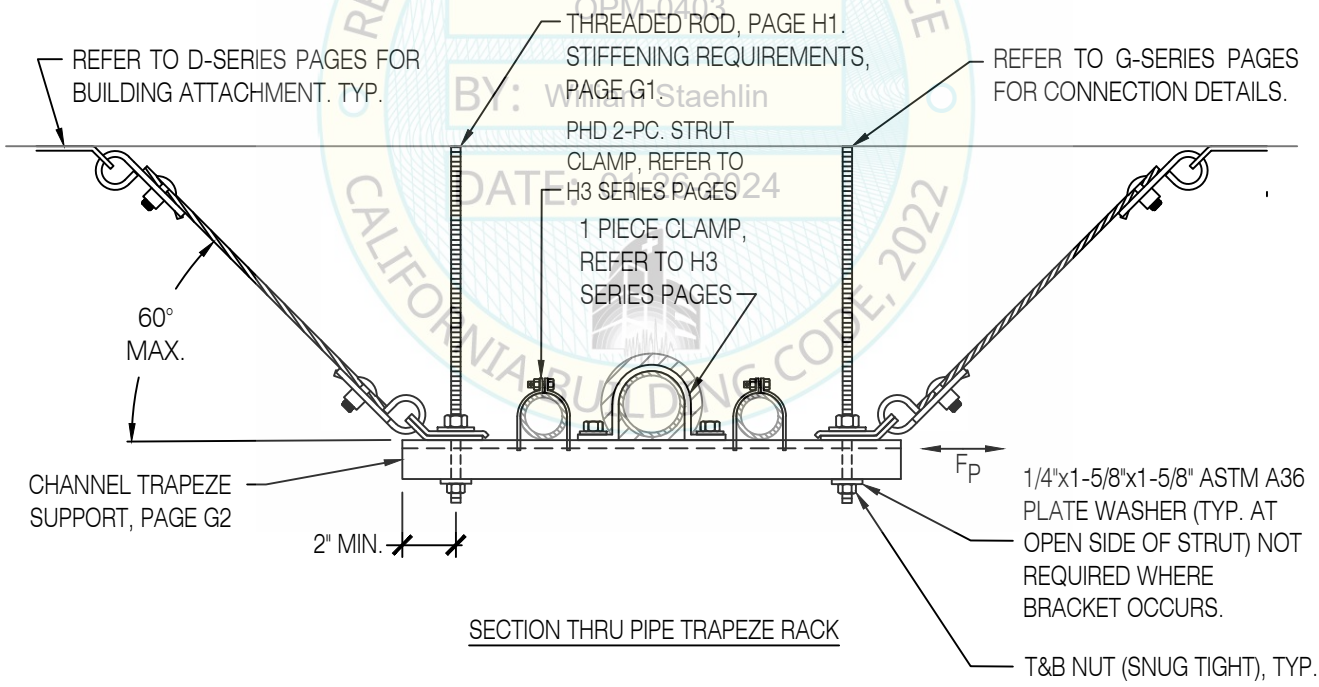

SECTION THRU PIPE TRAPEZE RACK

REVIEWED FOR CODE COMPLIANCE
HCAi
OPM-0403
BY: William Staehlin
DATE: 01/26/2024
CALIFORNIA BUILDING CODE, 2022

PIPE TRAPEZE RACK
2-WAY TRANSVERSE, CABLE BRACING

REGISTERED PROFESSIONAL ENGINEER MARCIN WASAZNIK S-6612 STRUCTURAL STATE OF CALIFORNIA

ISAT
A Division of Tomarco Contractor Specialties

International Seismic Application Technology
14848 Northam Street, La Mirada, CA 90638
877-999-4728 (Toll Free) 714-523-0845 (fax)
www.isatsb.com

Rev. 2
06/26/18

Page
B15.0

FOR BRACE SPACING, CABLE BRACE ASSEMBLY, THREADED SUPPORT ROD AND DECK ANCHORAGE REQUIREMENTS SEE BRACING TABLES

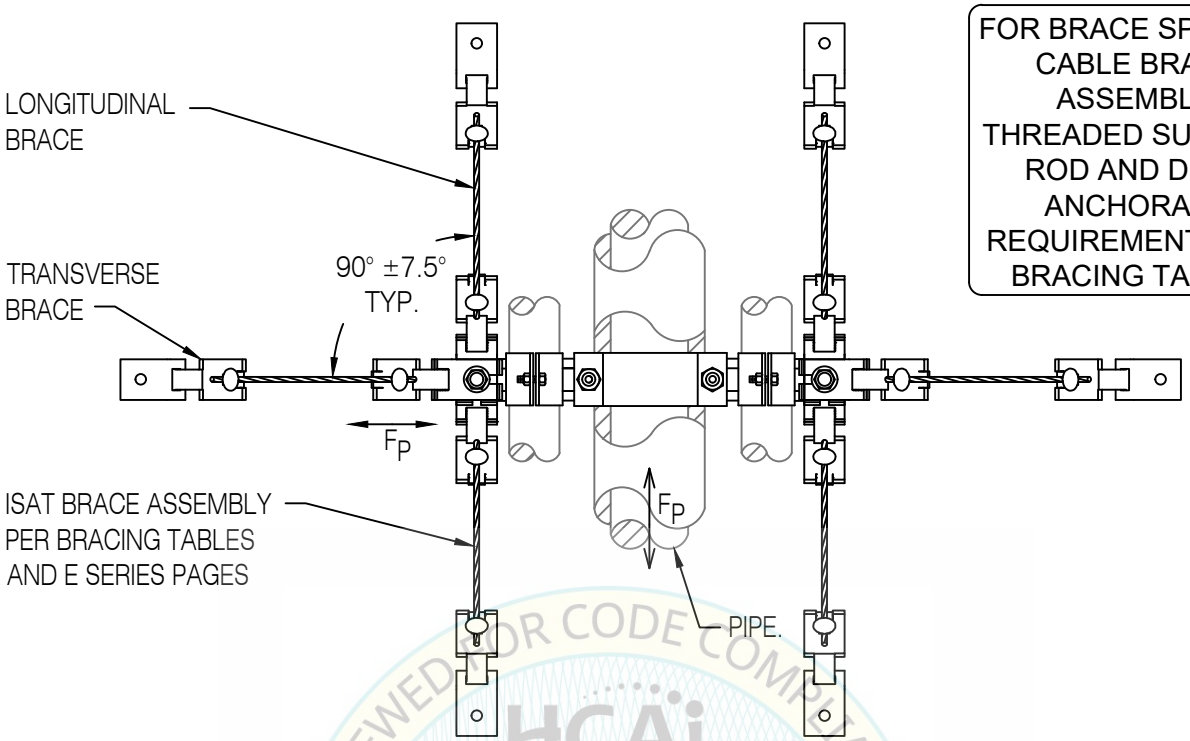

OVERHEAD VIEW

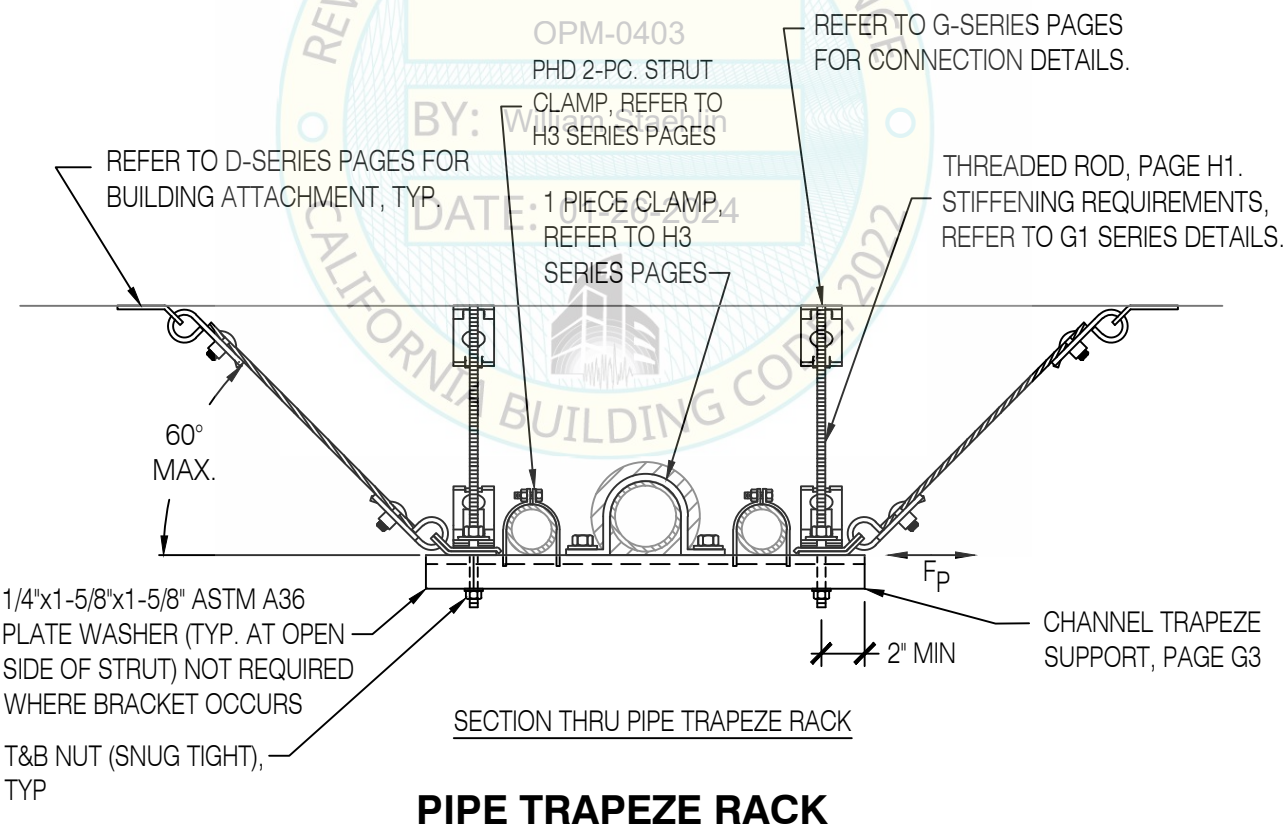

SECTION THRU PIPE TRAPEZE RACK

REVIEWED FOR CODE COMPLIANCE
HCAi
OPM-0403
BY: William Staehlin
DATE: 01-26-2024
CALIFORNIA BUILDING CODE 2022

PIPE TRAPEZE RACK
6-WAY TRANSVERSE-LONGITUDINAL, CABLE BRACING

REGISTERED PROFESSIONAL ENGINEER MARCIN WASAZNIK S-6612 STRUCTURAL STATE OF CALIFORNIA

ISAT
A Division of Tomarco Contractor Specialties
International Seismic Application Technology
14848 Northam Street, La Mirada, CA 90638
877-999-4728 (Toll Free) 714-523-0845 (fax)
www.isatsb.com

Rev. 3
08/29/23

Page
B15.1

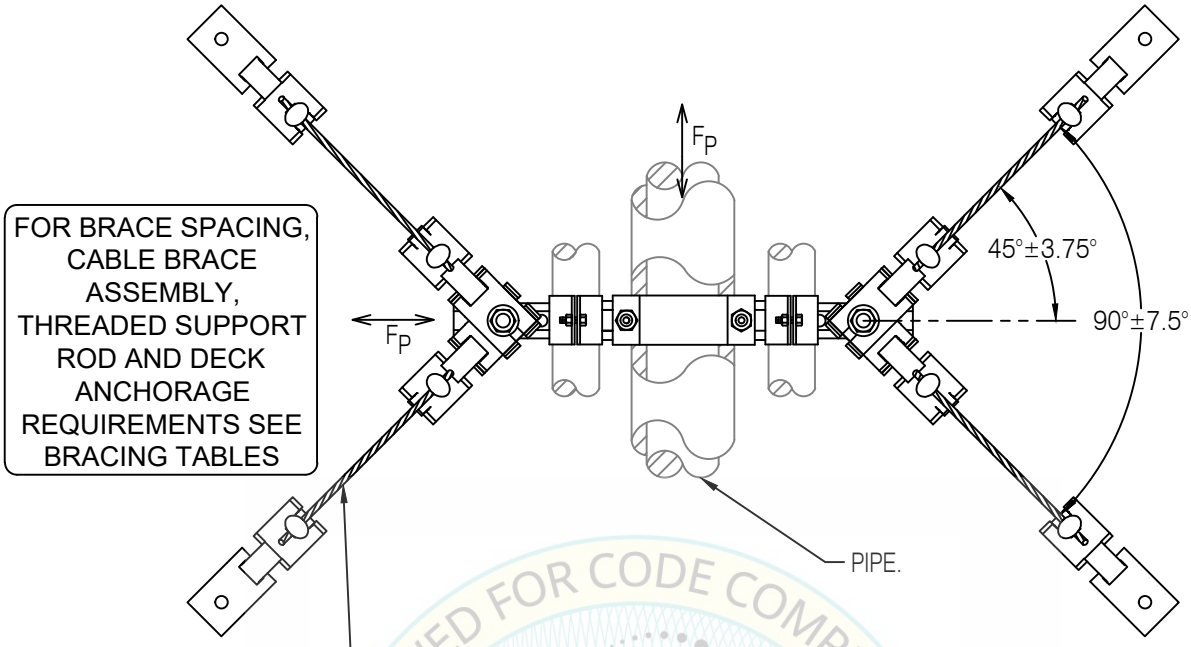

OVERHEAD VIEW

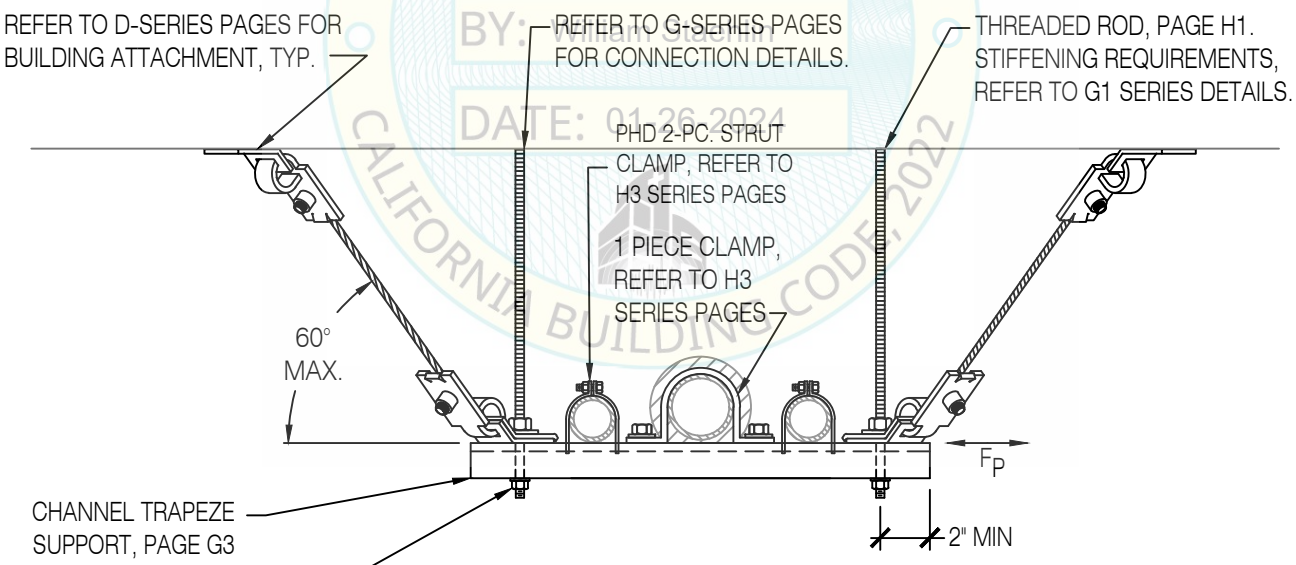

SECTION THRU PIPE TRAPEZE RACK

REVIEWED FOR CODE COMPLIANCE
HCAi
OPM-0403
BY: WILLIAM STAEHLIN
DATE: 01-26-2024
CALIFORNIA BUILDING CODE, 2022

PIPE TRAPEZE RACK
4-WAY SPLAYED TRANSVERSE-LONGITUDINAL, CABLE BRACING

REGISTERED PROFESSIONAL ENGINEER MARCIN WASAZNIK S-6612 STRUCTURAL STATE OF CALIFORNIA

ISAT
A Division of Tomarco Contractor Specialties
International Seismic Application Technology
14848 Northam Street, La Mirada, CA 90638
877-999-4728 (Toll Free) 714-523-0845 (fax)
www.isatsb.com

Rev. 3
08/29/23

Page
B15.2

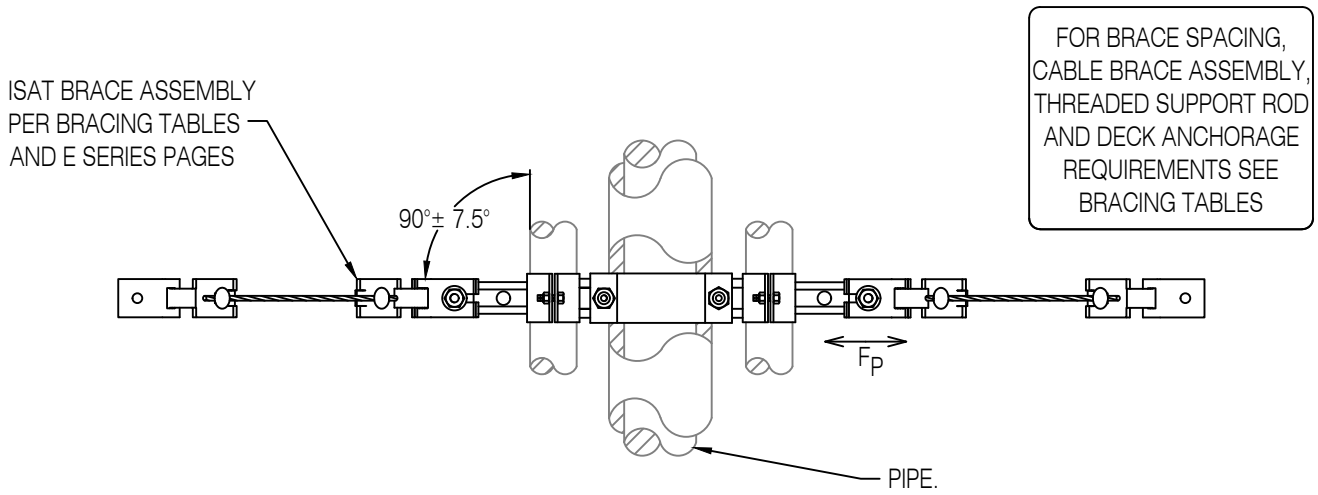

OVERHEAD VIEW

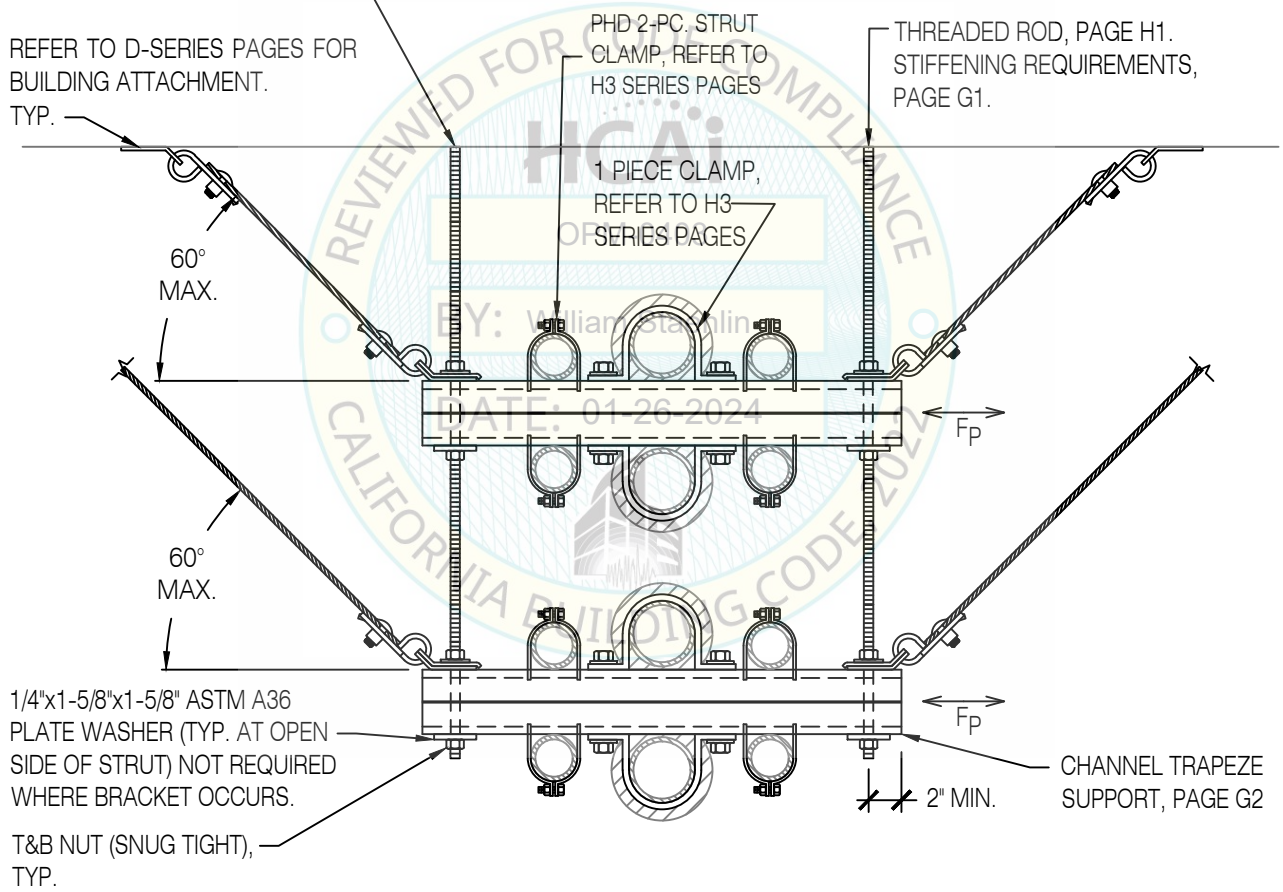

SECTION THRU PIPE TRAPEZE RACK

REVIEWED FOR CODE COMPLIANCE
HCAi
BY: William Staehlin
DATE: 01-26-2024
CALIFORNIA BUILDING CODE 2022

2-TIERED PIPE TRAPEZE RACK
2-WAY TRANSVERSE, CABLE BRACING

REGISTERED PROFESSIONAL ENGINEER MARCIN WASAZNIK S-6612 STRUCTURAL STATE OF CALIFORNIA

ISAT
A Division of Tomarco Contractor Specialties
International Seismic Application Technology
14848 Northam Street, La Mirada, CA 90638
877-999-4728 (Toll Free) 714-523-0845 (fax)
www.isatsb.com

Rev. 3
06/26/18

Page
B16.0

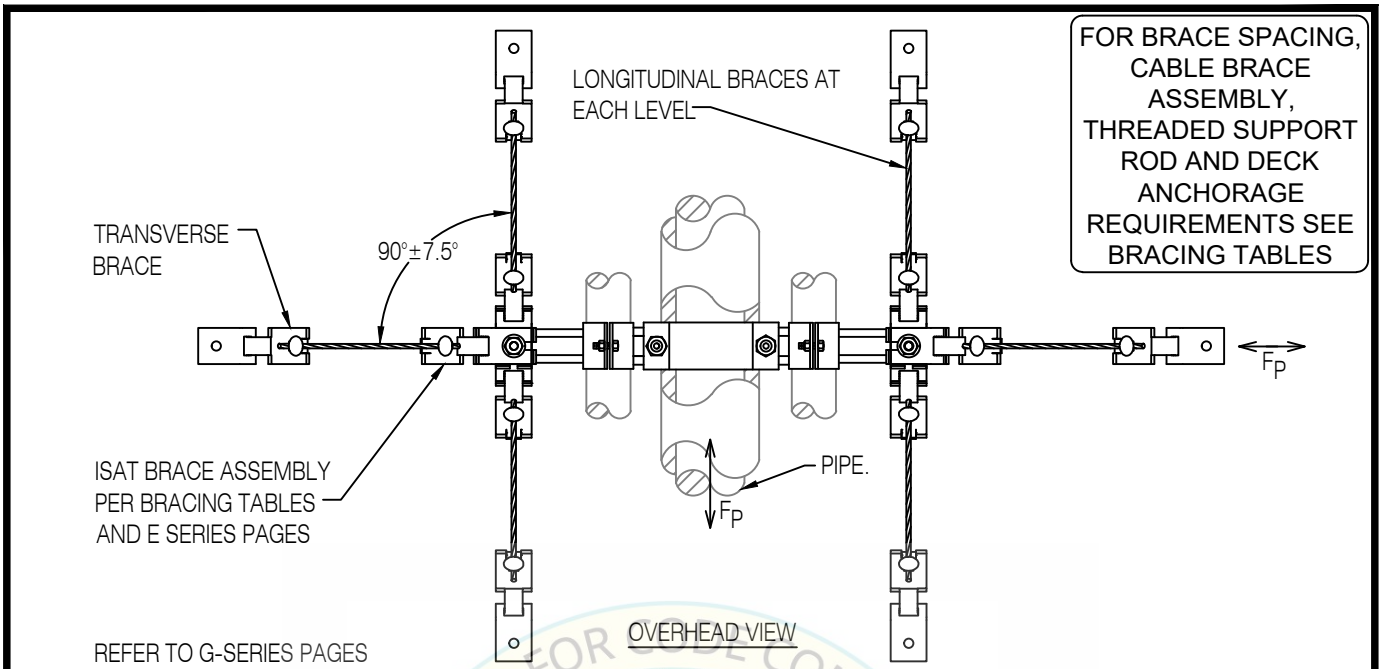

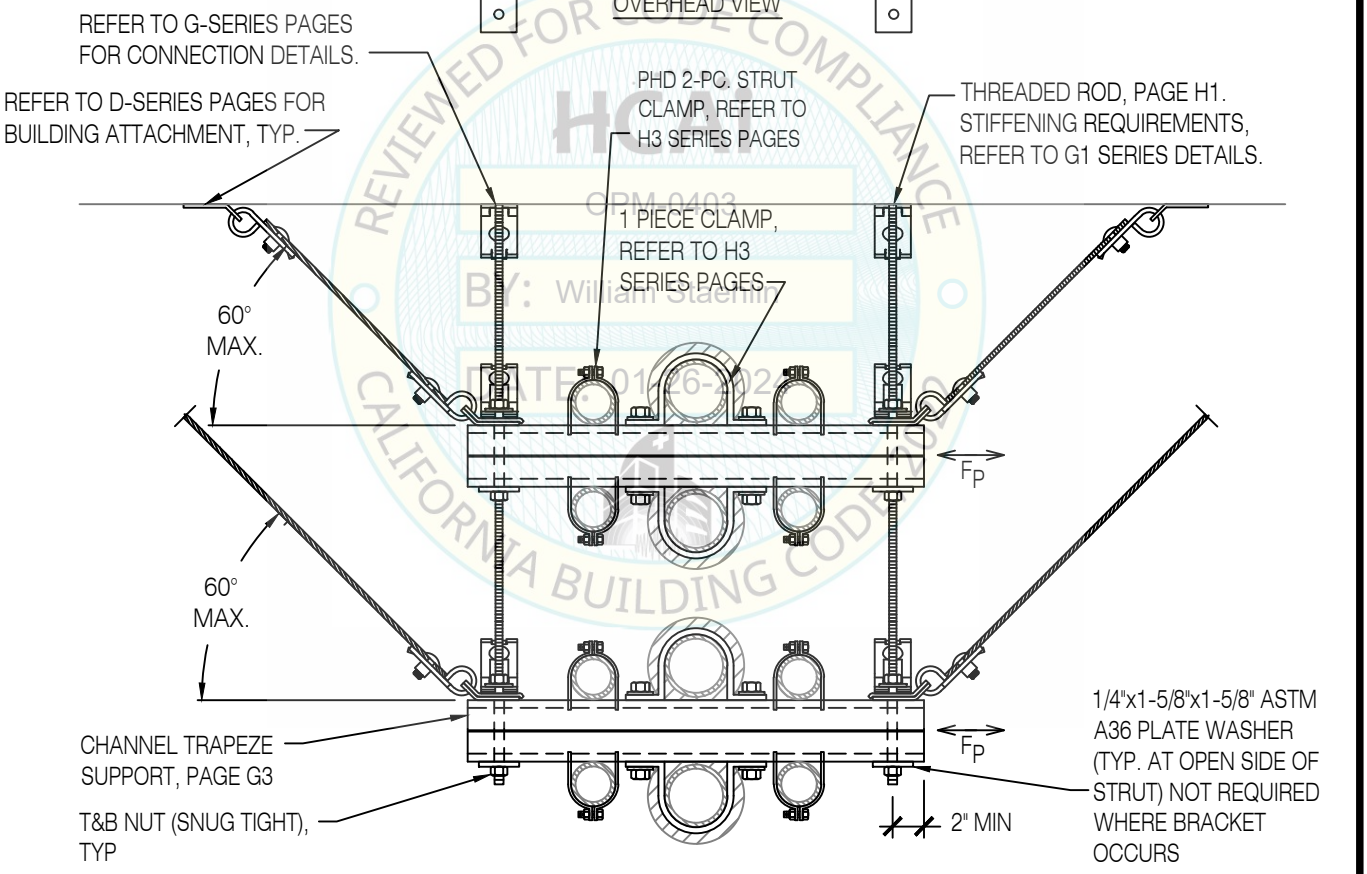

SECTION THRU PIPE TRAPEZE RACK

REVIEWED FOR CODE COMPLIANCE
HCAI
OPM-0403
BY: William Staehlin
DATE: 01-26-2024
CALIFORNIA BUILDING CODES

2-TIERED PIPE TRAPEZE RACK
6-WAY TRANSVERSE-LONGITUDINAL, CABLE BRACING

REGISTERED PROFESSIONAL ENGINEER MARCIN WASAZNIK S-6612 STRUCTURAL STATE OF CALIFORNIA

ISAT
A Division of Tomarco Contractor Specialties
International Seismic Application Technology
14848 Northam Street, La Mirada, CA 90638
877-999-4728 (Toll Free) 714-523-0845 (fax)
www.isatsb.com

Rev. 4
08/29/23

Page
B16.1

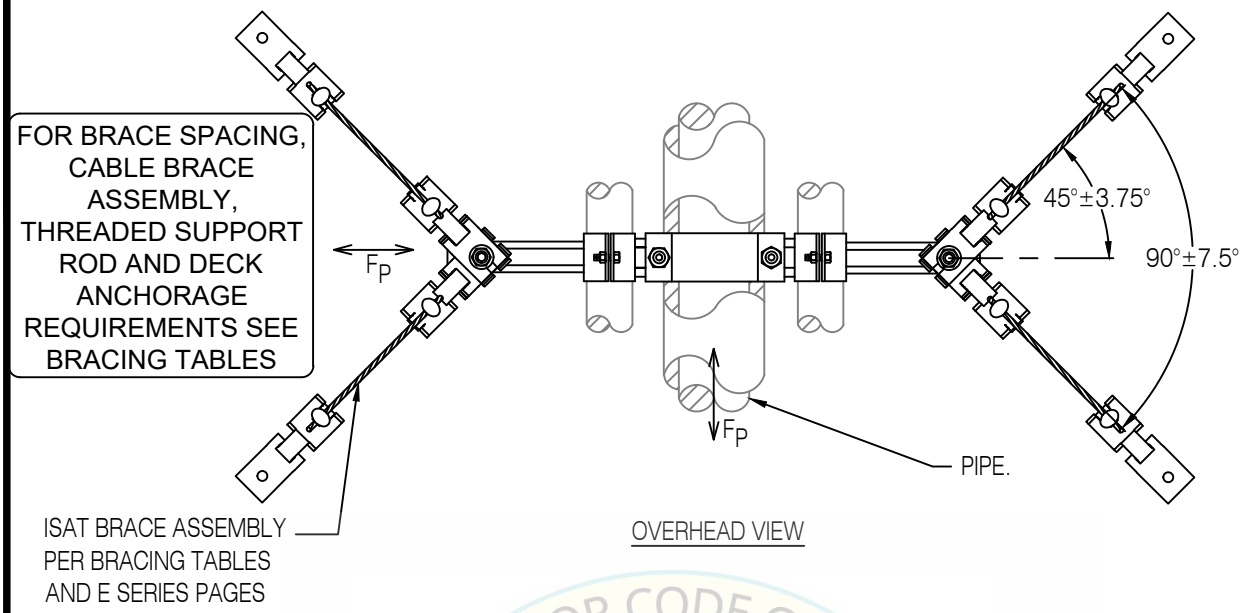

OVERHEAD VIEW

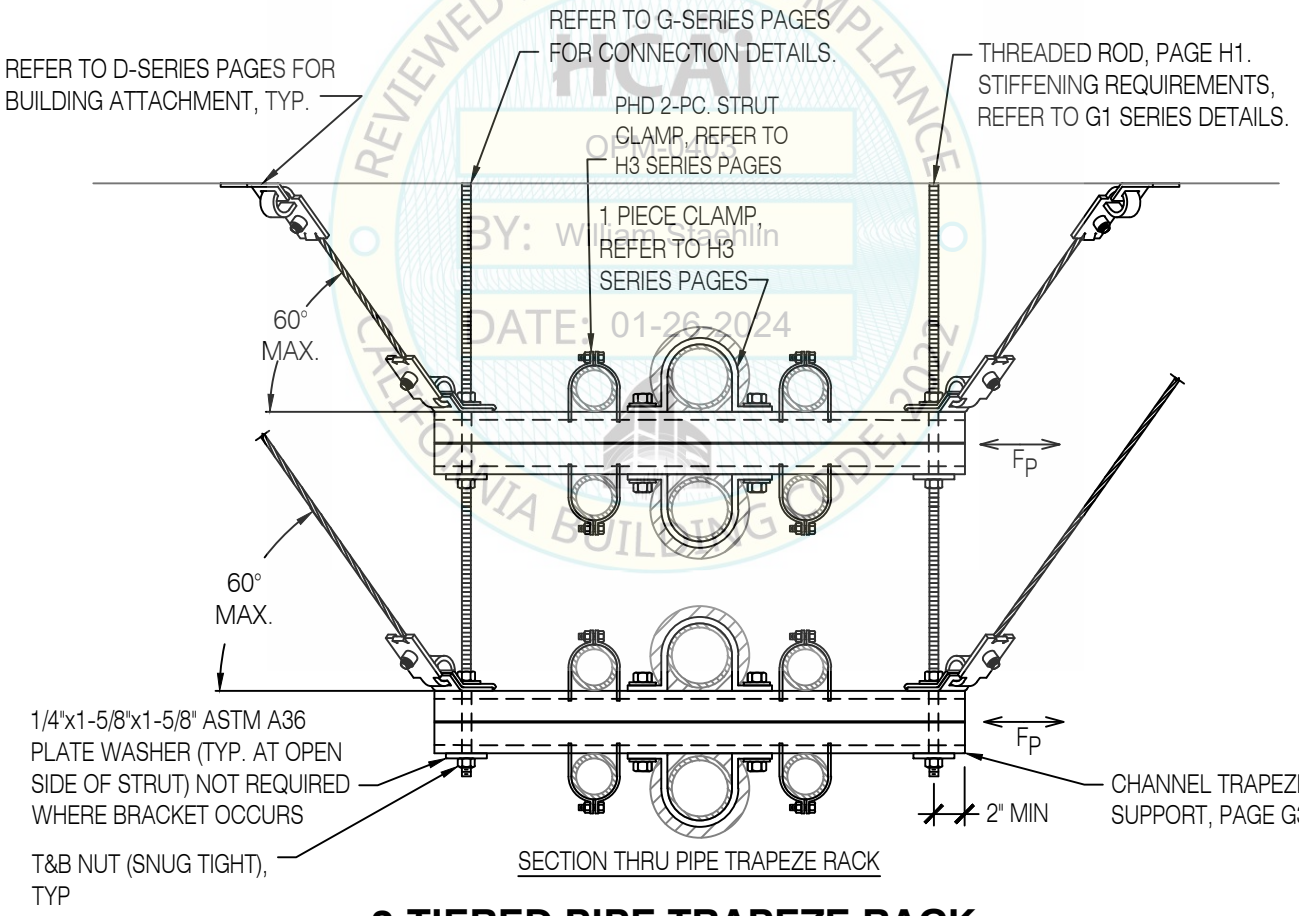

SECTION THRU PIPE TRAPEZE RACK

REVIEWED FOR CODE COMPLIANCE
HCAI
OPM-0403
BY: William Staehlin
DATE: 01-26-2024
CALIFORNIA BUILDING CODE 2022

2-TIERED PIPE TRAPEZE RACK
4-WAY SPLAYED TRANSVERSE-LONGITUDINAL, CABLE BRACING

REGISTERED PROFESSIONAL ENGINEER MARCIN WASAZNIK S-6612 STRUCTURAL STATE OF CALIFORNIA

ISAT
A Division of Tomarco Contractor Specialties
International Seismic Application Technology
14848 Northam Street, La Mirada, CA 90638
877-999-4728 (Toll Free) 714-523-0845 (fax)
www.isatsb.com

Rev. 4
08/29/23

Page
B16.2

FOR BRACE SPACING, CABLE BRACE ASSEMBLY, THREADED SUPPORT ROD AND DECK ANCHORAGE REQUIREMENTS SEE BRACING TABLES

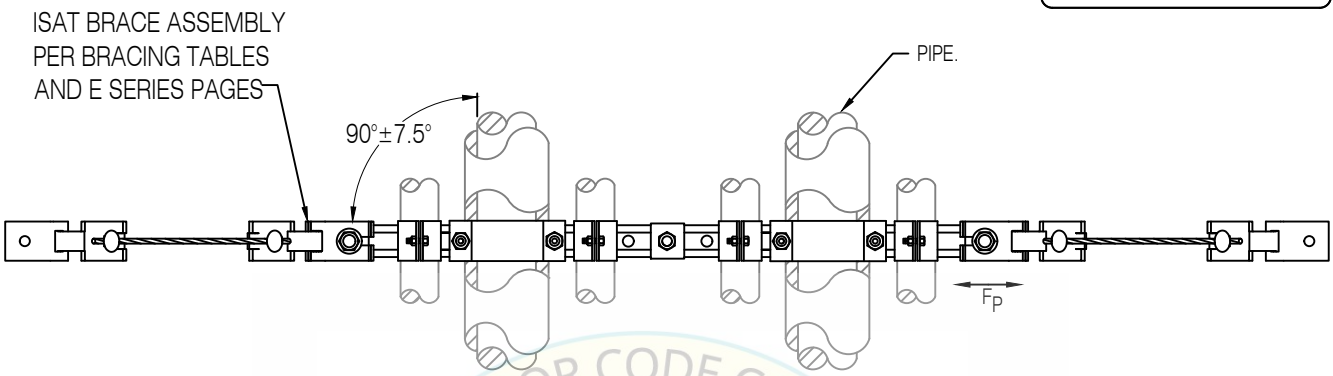

OVERHEAD VIEW

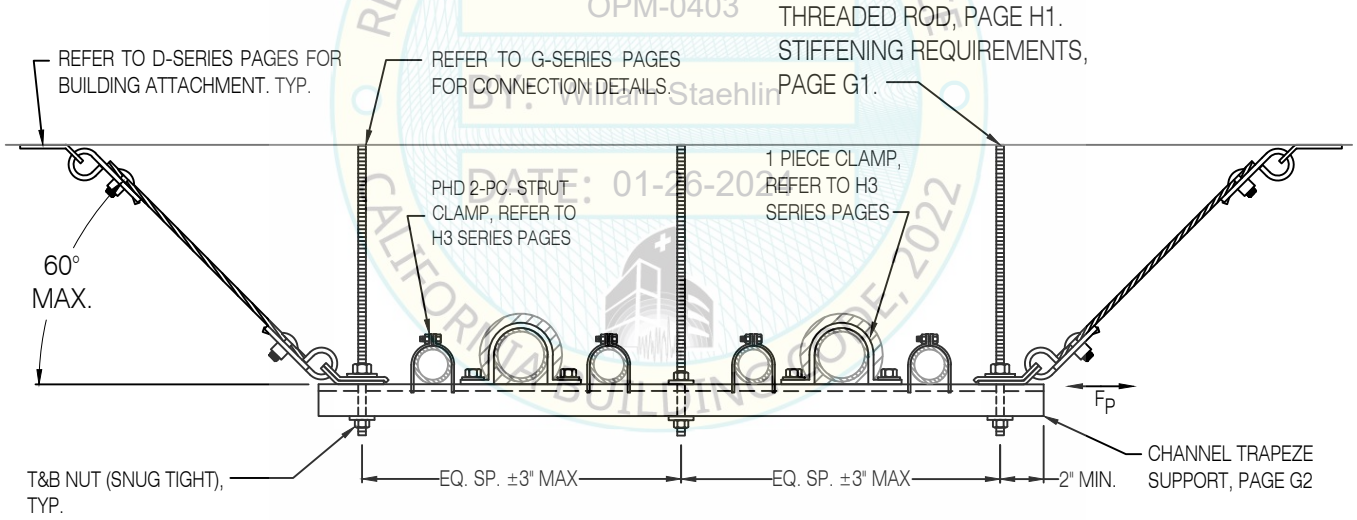

SECTION THRU PIPE TRAPEZE RACK

REVIEWED FOR CODE COMPLIANCE
HCAI
OPM-0403
BY: William Staehlin
DATE: 01-26-2024
CALIFORNIA BUILDING CODE, 2022

3-ROD PIPE TRAPEZE RACK
2-WAY TRANSVERSE, CABLE BRACING

REGISTERED PROFESSIONAL ENGINEER MARCIN WASAZNIK S-6612 STRUCTURAL STATE OF CALIFORNIA

ISAT
A Division of Tomarco Contractor Specialties
International Seismic Application Technology
14848 Northam Street, La Mirada, CA 90638
877-999-4728 (Toll Free) 714-523-0845 (fax)
www.isatsb.com

Rev. 2
06/26/18

Page
B17.0

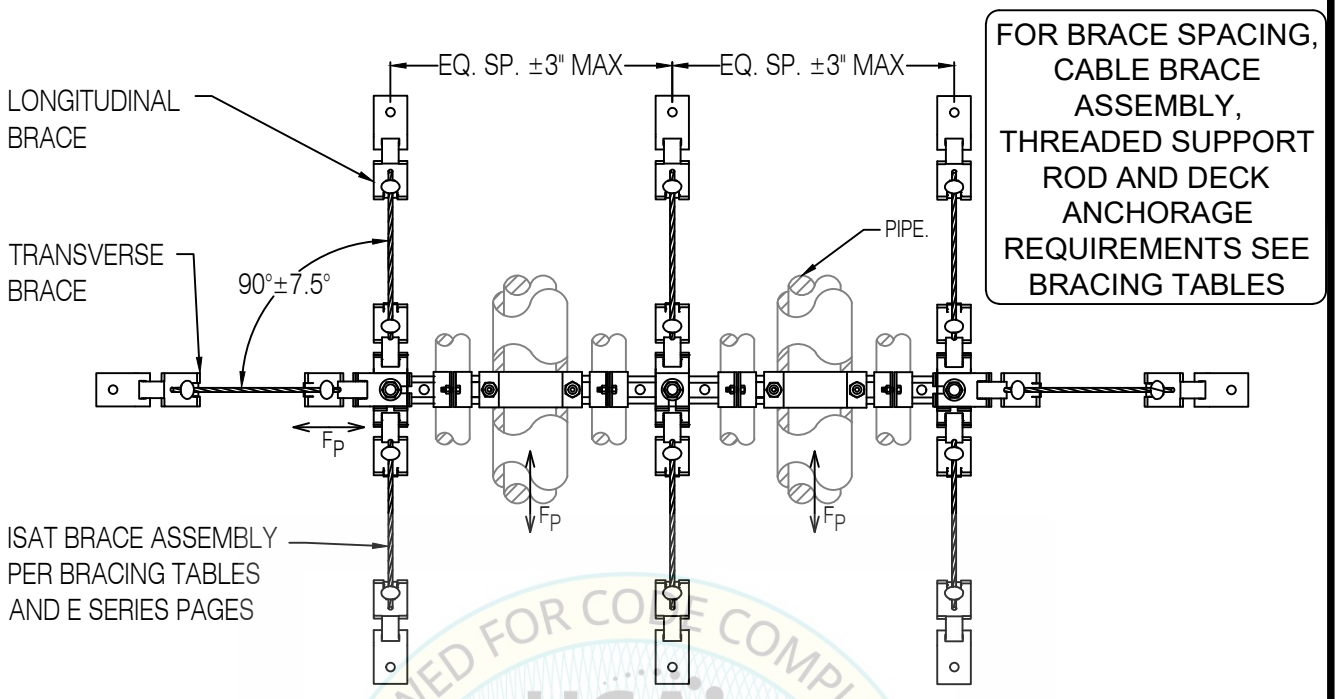

FOR BRACE SPACING, CABLE BRACE ASSEMBLY, THREADED SUPPORT ROD AND DECK ANCHORAGE REQUIREMENTS SEE BRACING TABLES

OVERHEAD VIEW

REVIEWED FOR CODE COMPLIANCE
HCAi
OPM-0403
BY: William Staehlin
DATE: 01-26-2024
CALIFORNIA BUILDING CODE, 2022

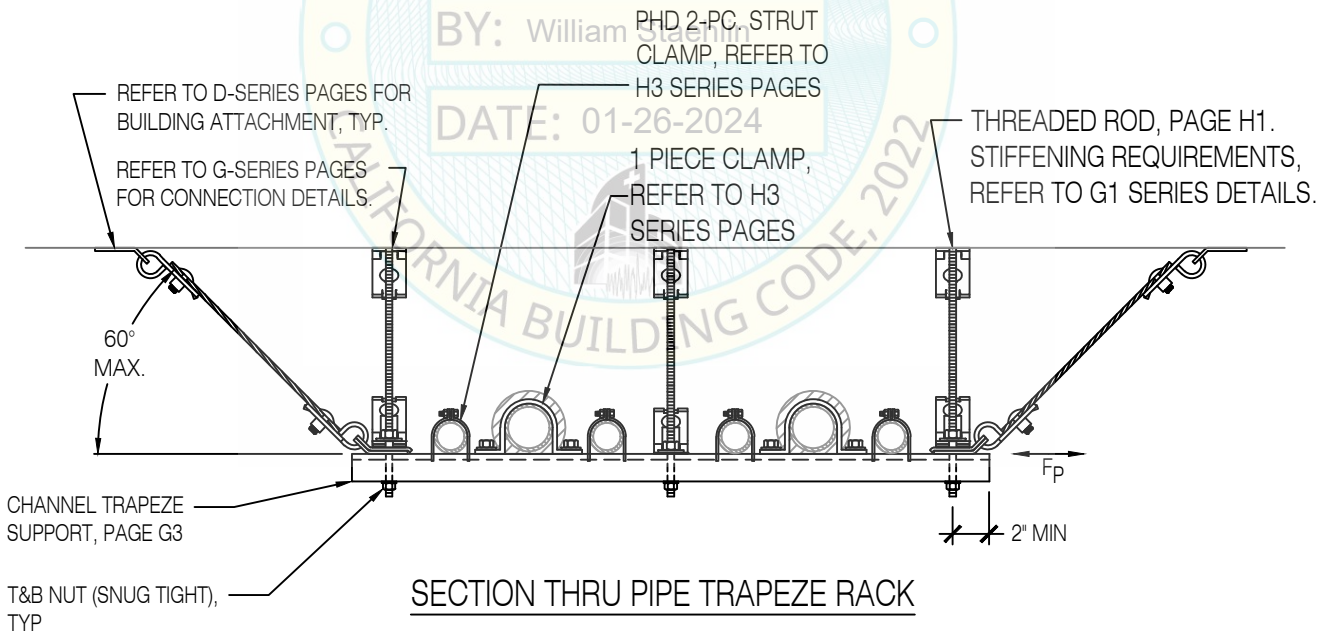

SECTION THRU PIPE TRAPEZE RACK

3-ROD PIPE TRAPEZE RACK
8-WAY TRANSVERSE-LONGITUDINAL, CABLE BRACING

REGISTERED PROFESSIONAL ENGINEER MARCIN WASAZNIK S-6612 STRUCTURAL STATE OF CALIFORNIA

ISAT
A Division of Tomarco Contractor Specialties
International Seismic Application Technology
14848 Northam Street, La Mirada, CA 90638
877-999-4728 (Toll Free) 714-523-0845 (fax)
www.isatsb.com

Rev. 3
08/29/23

Page
B17.1

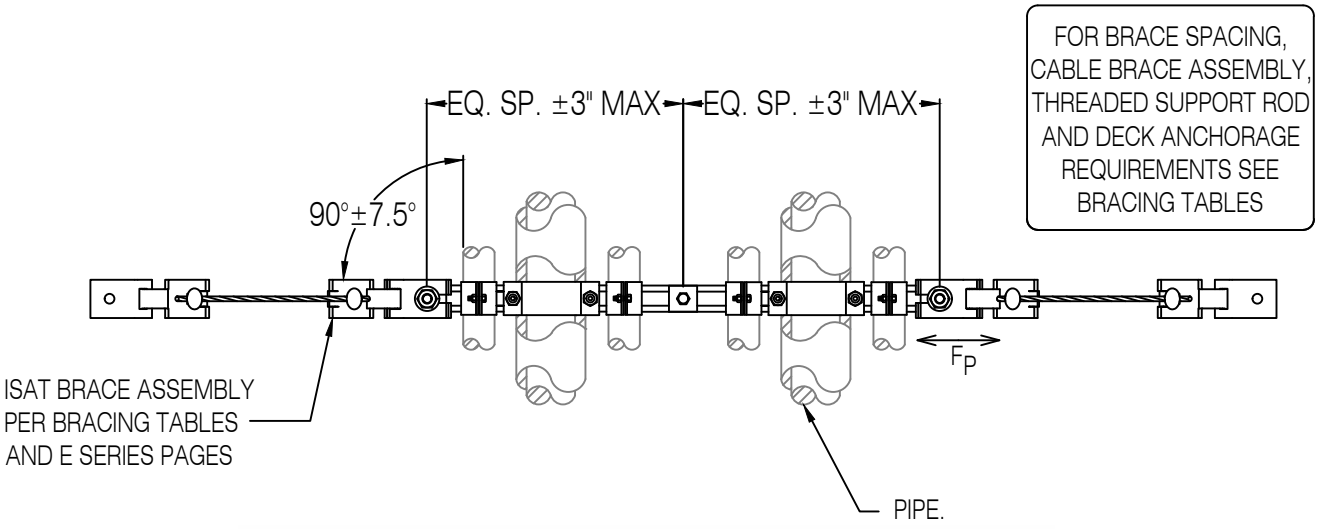

OVERHEAD VIEW

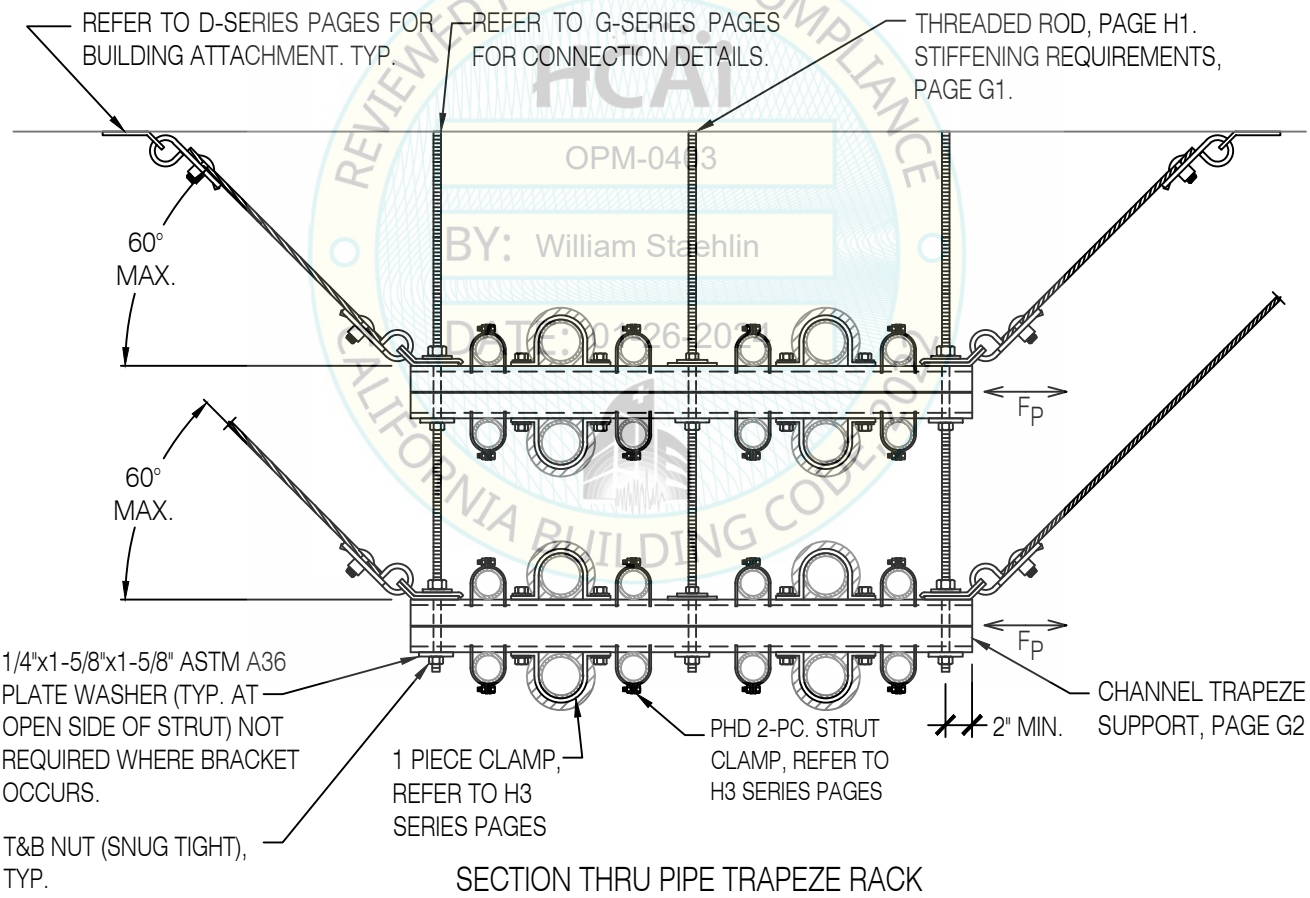

SECTION THRU PIPE TRAPEZE RACK

REVIEWED FOR CODE COMPLIANCE
HCAi
OPM-0403
BY: William Staehlin
DATE: 01/26/2024
CALIFORNIA BUILDING CODE 2022

3-ROD, 2-TIERED PIPE TRAPEZE RACK
2-WAY TRANSVERSE, CABLE BRACING

REGISTERED PROFESSIONAL ENGINEER MARCIN WASAZNIK S-6612 STRUCTURAL STATE OF CALIFORNIA

ISAT
A Division of Tomarco Contractor Specialties

International Seismic Application Technology
14848 Northam Street, La Mirada, CA 90638
877-999-4728 (Toll Free) 714-523-0845 (fax)
www.isatsb.com

Rev. 3
06/26/18

Page
B18.0

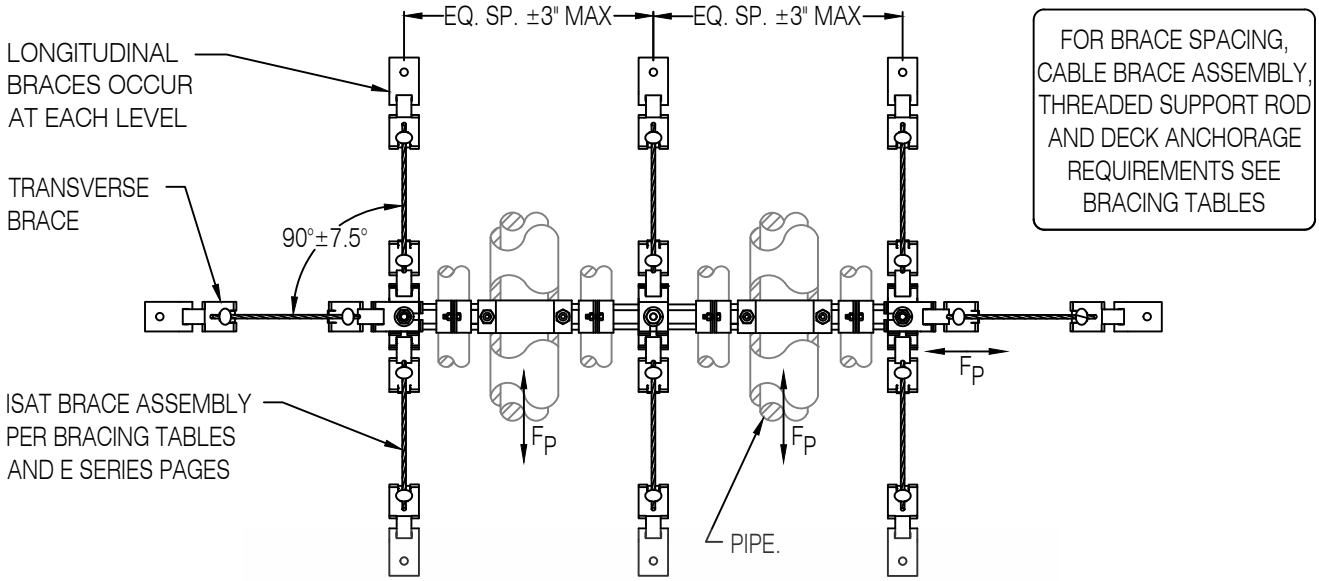

OVERHEAD VIEW

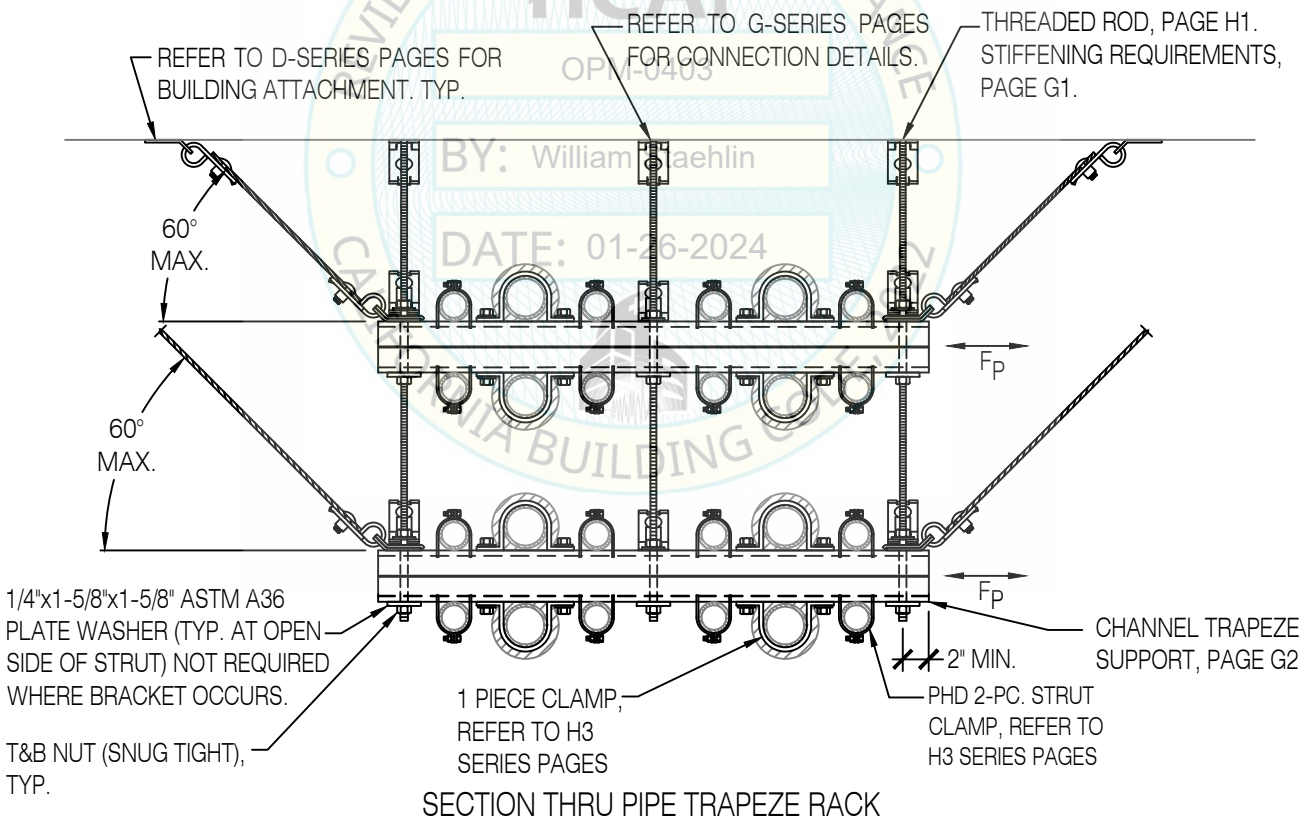

SECTION THRU PIPE TRAPEZE RACK

3-ROD, 2-TIERED PIPE TRAPEZE RACK
8-WAY TRANSVERSE-LONGITUDINAL, CABLE BRACING

REVIEWED FOR CODE COMPLIANCE
HCAi
OPM-0403
BY: William Staehlin
DATE: 01-26-2024
CALIFORNIA BUILDING CODES

REGISTERED PROFESSIONAL ENGINEER
MARCIN WASAZNIK
S-6612
STRUCTURAL
STATE OF CALIFORNIA

ISAT
A Division of Tomarco Contractor Specialties

International Seismic Application Technology
14848 Northam Street, La Mirada, CA 90638
877-999-4728 (Toll Free) 714-523-0845 (fax)
www.isatsb.com

Rev. 4
06/26/18

Page
B18.1

FOR BRACE SPACING, RIGID BRACE ASSEMBLY, THREADED SUPPORT ROD AND DECK ANCHORAGE REQUIREMENTS SEE BRACING TABLES

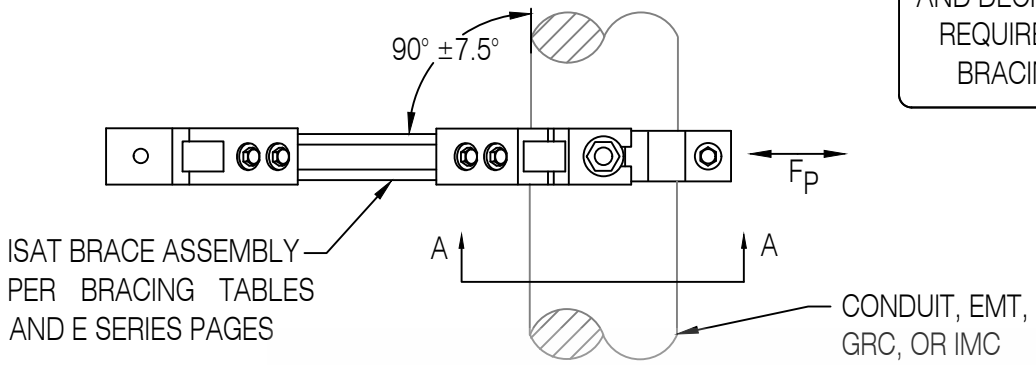

OVERHEAD VIEW

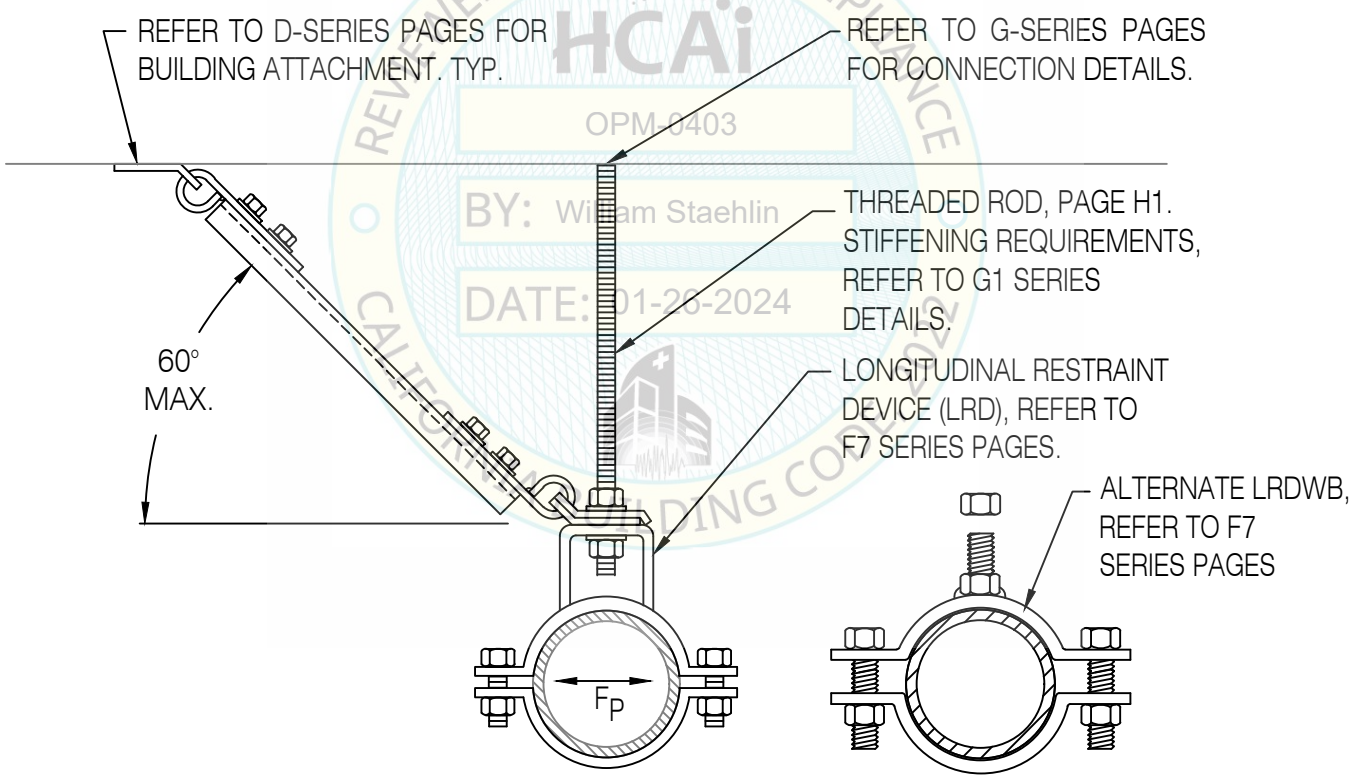

SECTION A-A

WELDED BOLT ALTERNATE

REVIEWED FOR CODE COMPLIANCE
HCAi
OPM-0403
BY: William Staehlin
DATE: 01-26-2024
CALIFORNIA BUILDING CODE

SINGLE HUNG CONDUIT, WITH LRD
1-WAY TRANSVERSE, RIGID BRACE

REGISTERED PROFESSIONAL ENGINEER
MARCIN WASAZNIK
S-6612
STRUCTURAL
STATE OF CALIFORNIA

ISAT
A Division of Tomarco Contractor Specialties

International Seismic Application Technology
14848 Northam Street, La Mirada, CA 90638
877-999-4728 (Toll Free) 714-523-0845 (fax)
www.isatsb.com

Rev. 0
12/06/18

Page
B19.0

FOR BRACE SPACING, RIGID BRACE ASSEMBLY, THREADED SUPPORT ROD AND DECK ANCHORAGE REQUIREMENTS SEE BRACING TABLES

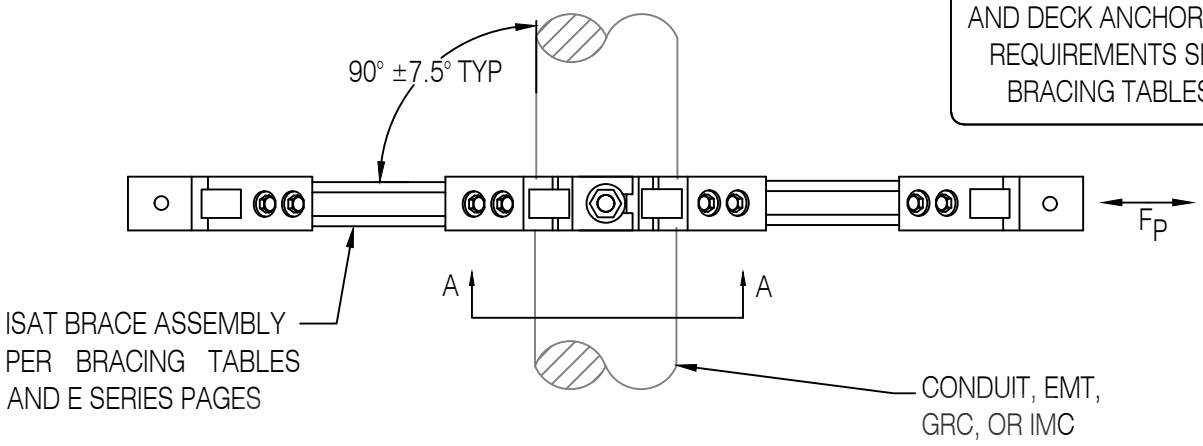

OVERHEAD VIEW

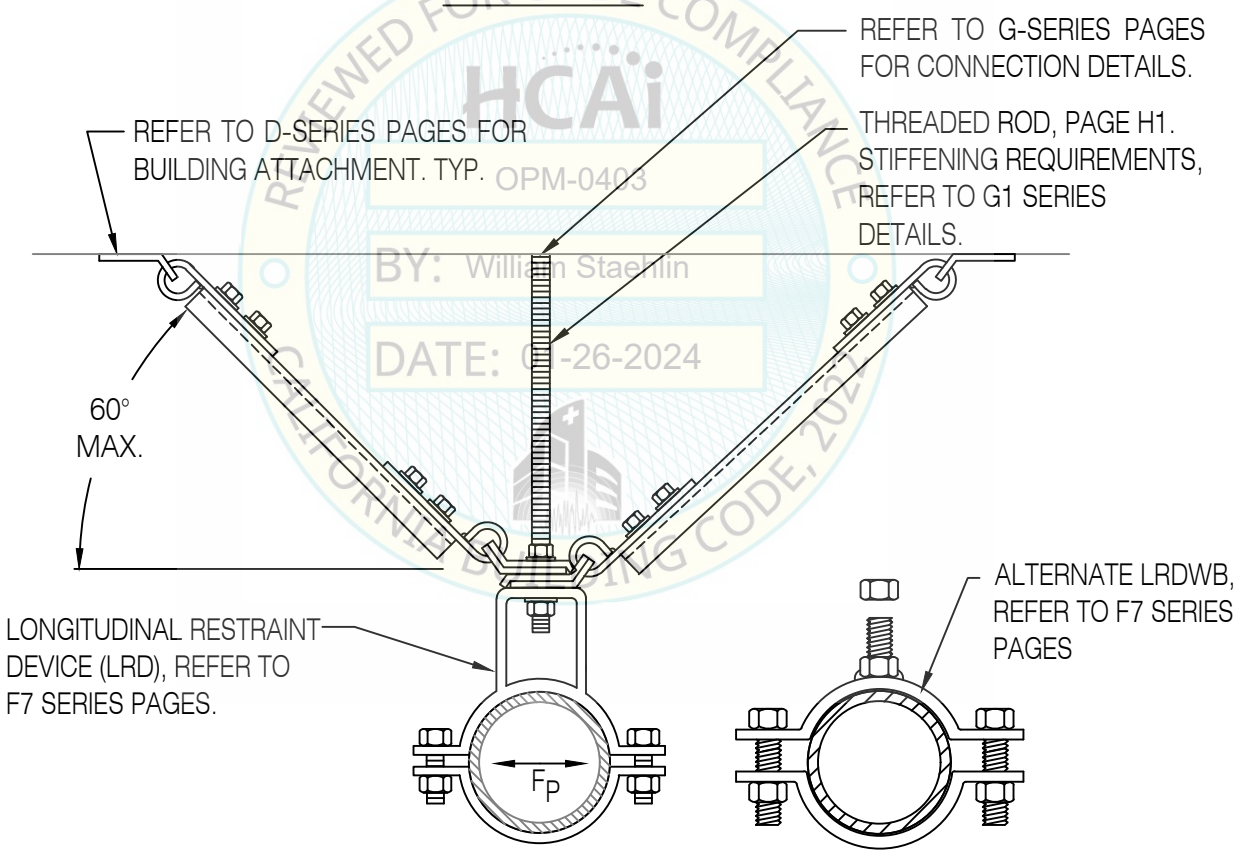

SECTION A-A WELDED BOLT ALTERNATE

REVIEWED FOR CODE COMPLIANCE
HCAi
OPM-0403
BY: William Staehlin
DATE: 01-26-2024
CALIFORNIA BUILDING CODE, 2022

SINGLE HUNG CONDUIT, WITH LRD
2-WAY TRANSVERSE, RIGID BRACING

REGISTERED PROFESSIONAL ENGINEER MARCIN WASAZNIK S-6612 STRUCTURAL STATE OF CALIFORNIA

ISAT
A Division of Tomarco Contractor Specialties

International Seismic Application Technology
14848 Northam Street, La Mirada, CA 90638
877-999-4728 (Toll Free) 714-523-0845 (fax)
www.isatsb.com

Rev. 0
12/06/18

Page
B19.2

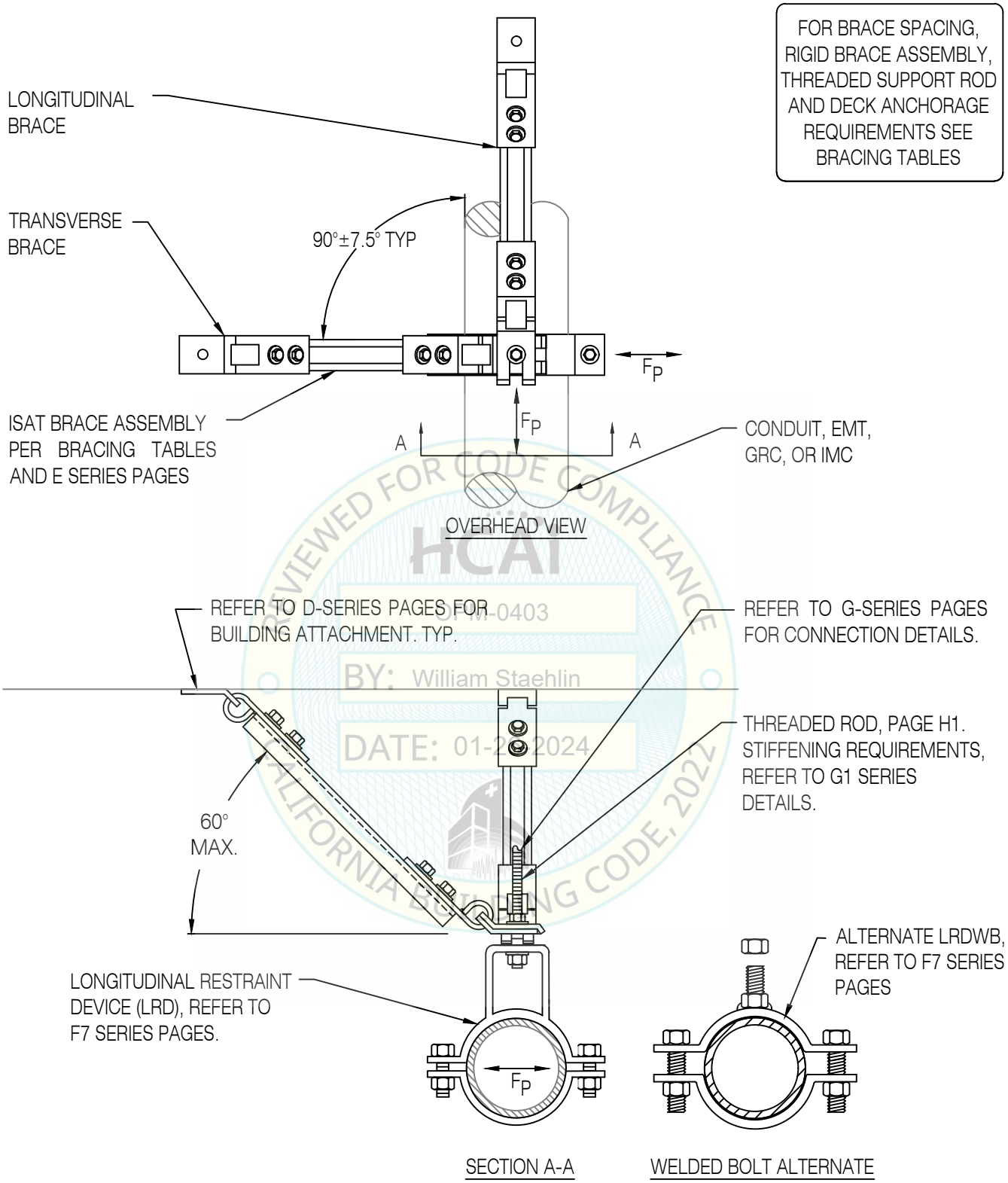

REVIEWED FOR CODE COMPLIANCE
HCAI
OPM-0403
BY: William Staehlin
DATE: 01-26-2024
CALIFORNIA BUILDING CODE, 2022

SINGLE HUNG CONDUIT, WITH LRD
2-WAY TRANSVERSE-LONGITUDINAL, RIGID BRACING

REGISTERED PROFESSIONAL ENGINEER
MARCIN WASAZNIK
S-6612
STRUCTURAL
STATE OF CALIFORNIA

ISAT
A Division of Tomarco Contractor Specialties

International Seismic Application Technology
14848 Northam Street, La Mirada, CA 90638
877-999-4728 (Toll Free) 714-523-0845 (fax)
www.isatsb.com

Rev. 0
12/06/18

Page
B19.4

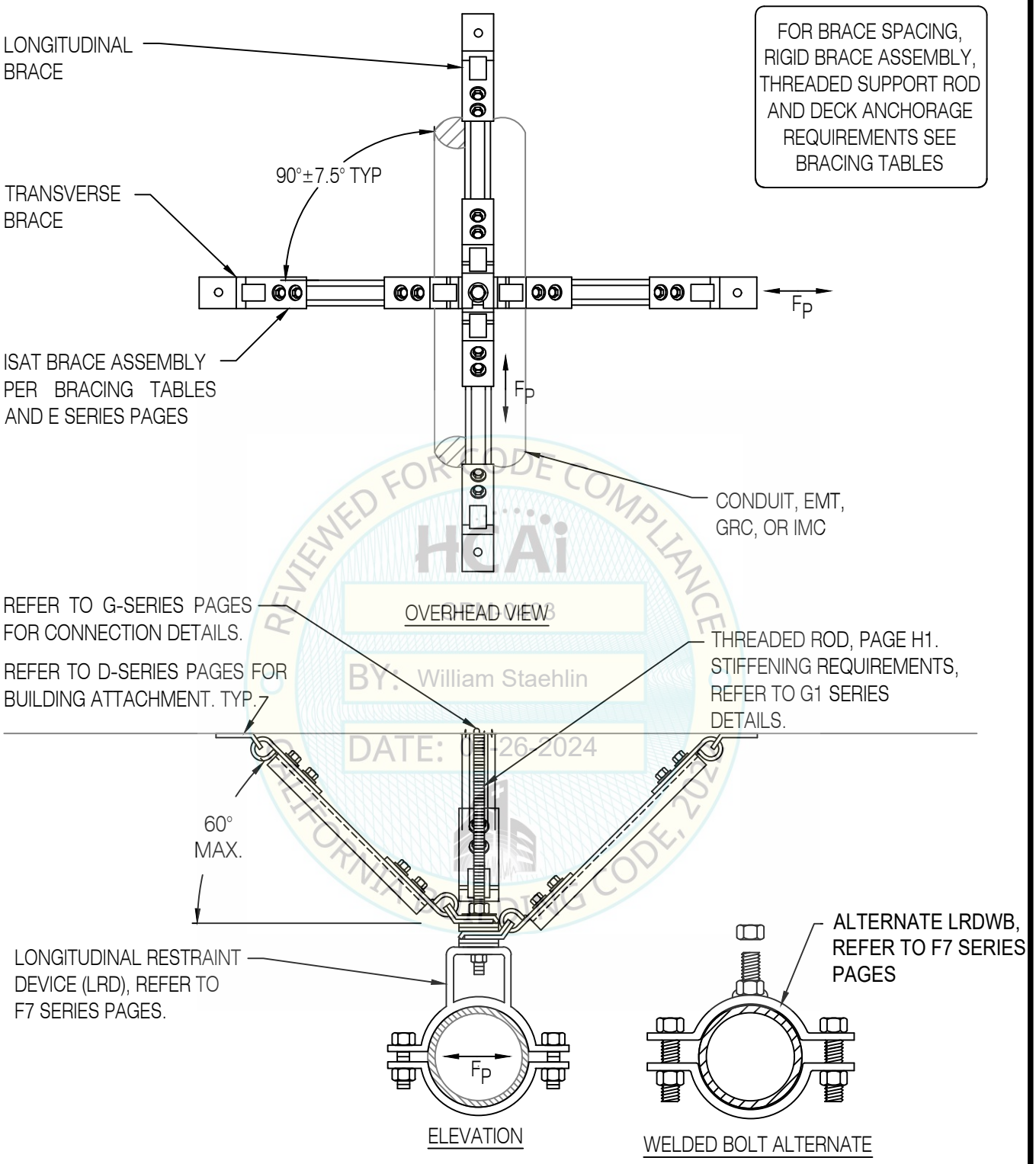

REVIEWED FOR CODE COMPLIANCE
HCAi
BY: William Staehlin
DATE: 01-26-2024
CALIFORNIA BUILDING CODE, 2022

SINGLE HUNG CONDUIT, WITH LRD
4-WAY TRANSVERSE-LONGITUDINAL, RIGID BRACING

REGISTERED PROFESSIONAL ENGINEER
MARCIN WASAZNIK
S-6612
STRUCTURAL
STATE OF CALIFORNIA

ISAT
A Division of Tomarco Contractor Specialties

International Seismic Application Technology
14848 Northam Street, La Mirada, CA 90638
877-999-4728 (Toll Free) 714-523-0845 (fax)
www.isatsb.com

Rev. 0
12/06/18

Page
B19.6

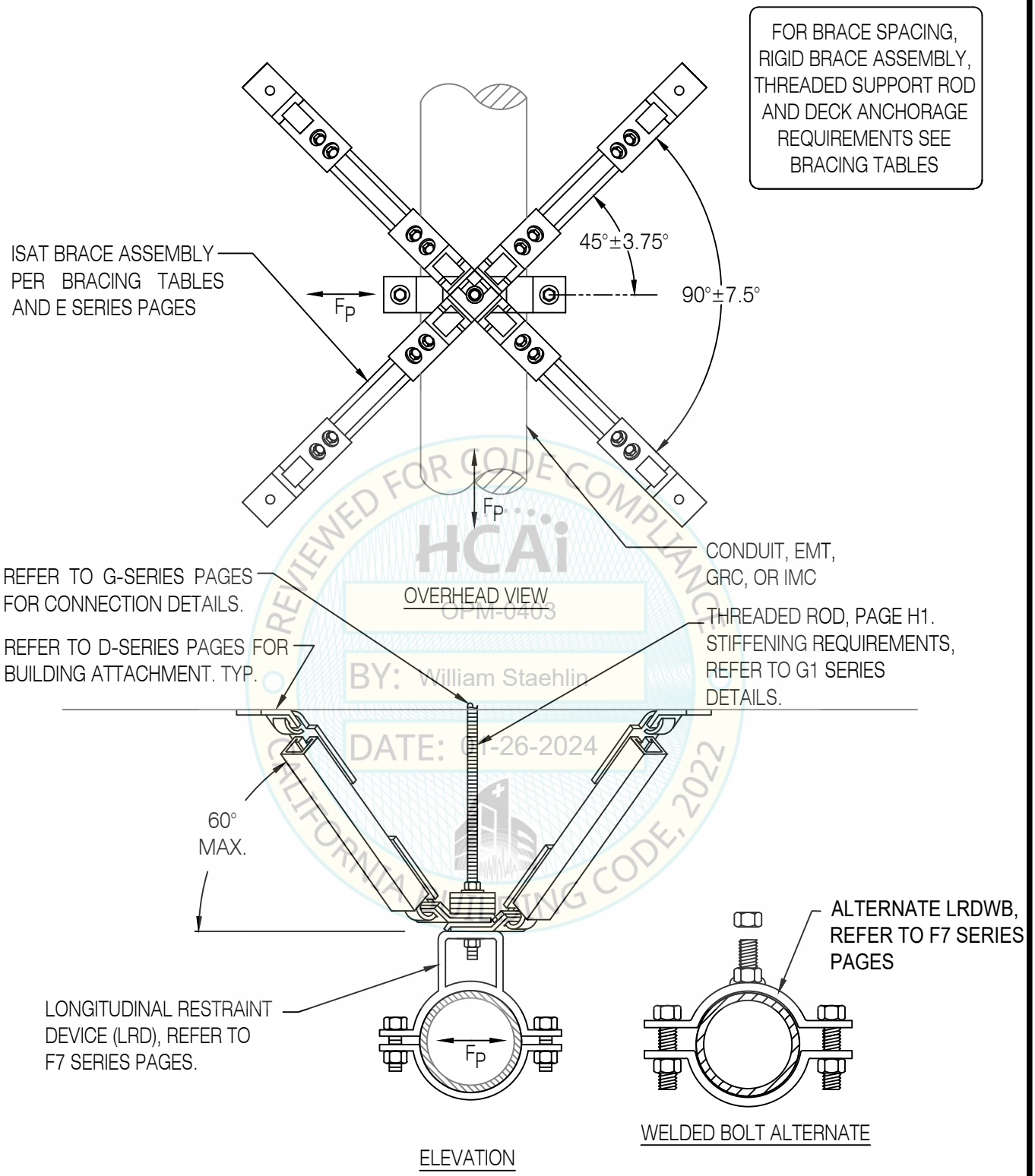

REVIEWED FOR CODE COMPLIANCE
HCAi
OPM-0403
BY: William Staehlin
DATE: 01-26-2024
CALIFORNIA BUILDING CODE, 2022

SINGLE HUNG CONDUIT, WITH LRD
4-WAY SPLAYED, RIGID BRACING

REGISTERED PROFESSIONAL ENGINEER MARCIN WASAZNIK S-6612 STRUCTURAL STATE OF CALIFORNIA

ISAT
A Division of Tomarco Contractor Specialties
International Seismic Application Technology
14848 Northam Street, La Mirada, CA 90638
877-999-4728 (Toll Free) 714-523-0845 (fax)
www.isatsb.com

Rev. 0
12/06/18

Page
B19.8

FOR BRACE SPACING, CABLE BRACE ASSEMBLY, THREADED SUPPORT ROD AND DECK ANCHORAGE REQUIREMENTS SEE BRACING TABLES

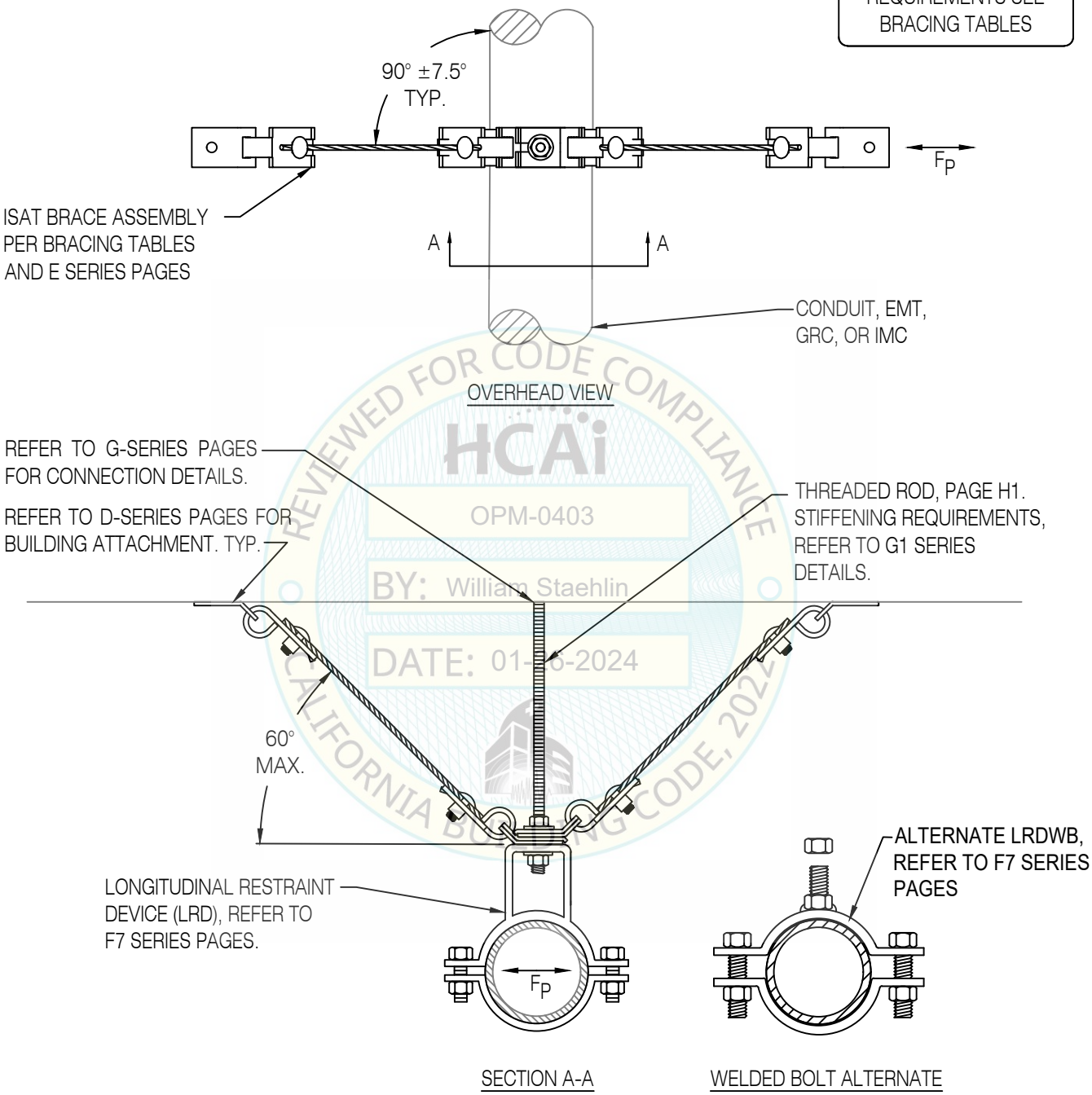

REVIEWED FOR CODE COMPLIANCE
HCAi
OPM-0403
BY: William Staehlin
DATE: 01-26-2024
CALIFORNIA BUILDING CODE, 2022

SINGLE HUNG CONDUIT, WITH LRD
2-WAY TRANSVERSE, CABLE BRACING

REGISTERED PROFESSIONAL ENGINEER MARCIN WASAZNIK S-6612 STRUCTURAL STATE OF CALIFORNIA

ISAT
A Division of Tomarco Contractor Specialties

International Seismic Application Technology
14848 Northam Street, La Mirada, CA 90638
877-999-4728 (Toll Free) 714-523-0845 (fax)
www.isatsb.com

Rev. 0
12/06/18

Page
B19.20

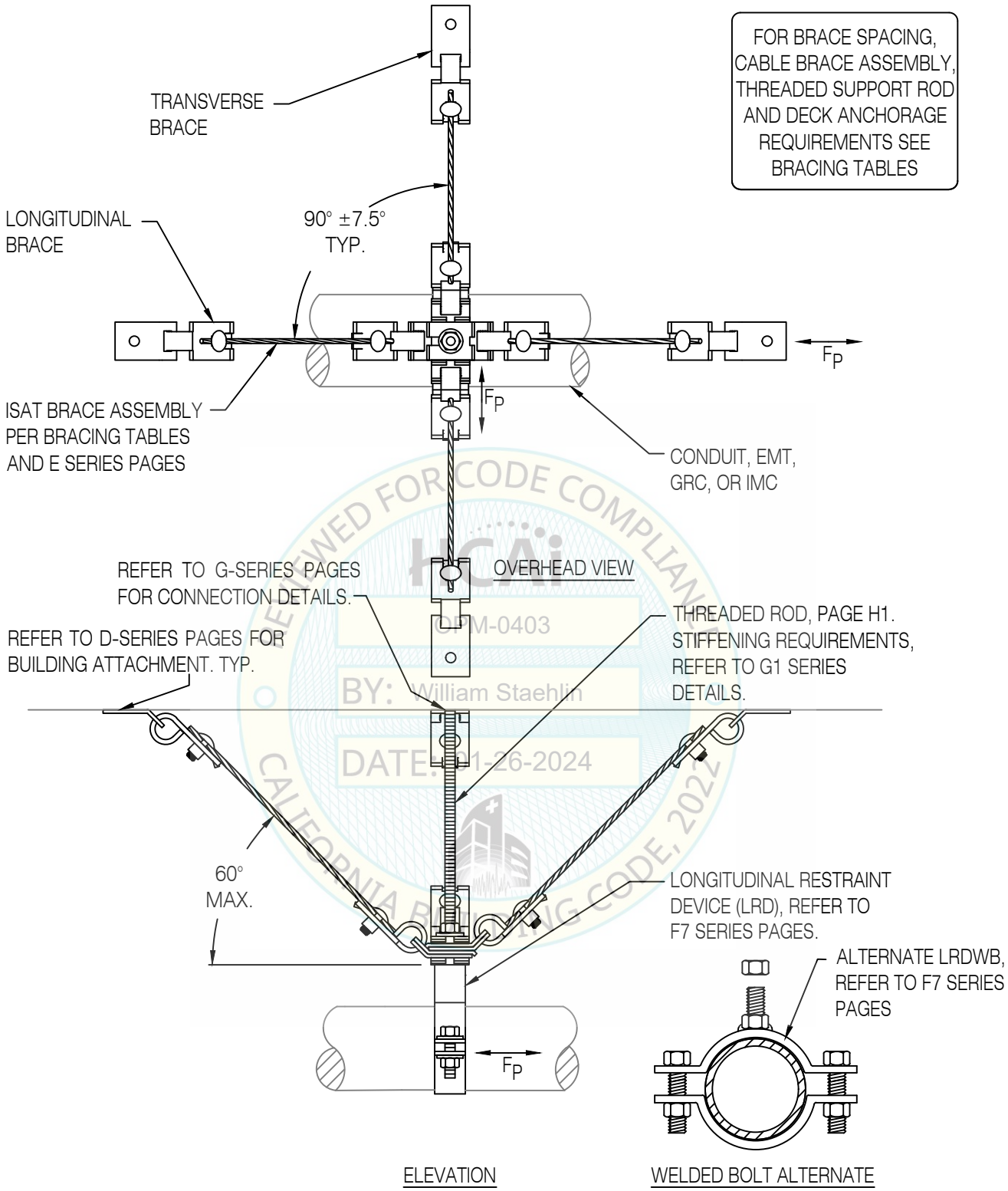

REVIEWED FOR CODE COMPLIANCE
HCAi
OPM-0403
BY: William Staehlin
DATE: 01-26-2024
CALIFORNIA BUILDING CODE, 2022

SINGLE HUNG CONDUIT, WITH LRD
4-WAY TRANSVERSE-LONGITUDINAL, CABLE BRACING

REGISTERED PROFESSIONAL ENGINEER MARCIN WASAZNIK S-6612 STRUCTURAL STATE OF CALIFORNIA

ISAT
A Division of Tomarco Contractor Specialties

International Seismic Application Technology
14848 Northam Street, La Mirada, CA 90638
877-999-4728 (Toll Free) 714-523-0845 (fax)
www.isatsb.com

Rev. 0
12/06/18

Page
B19.22

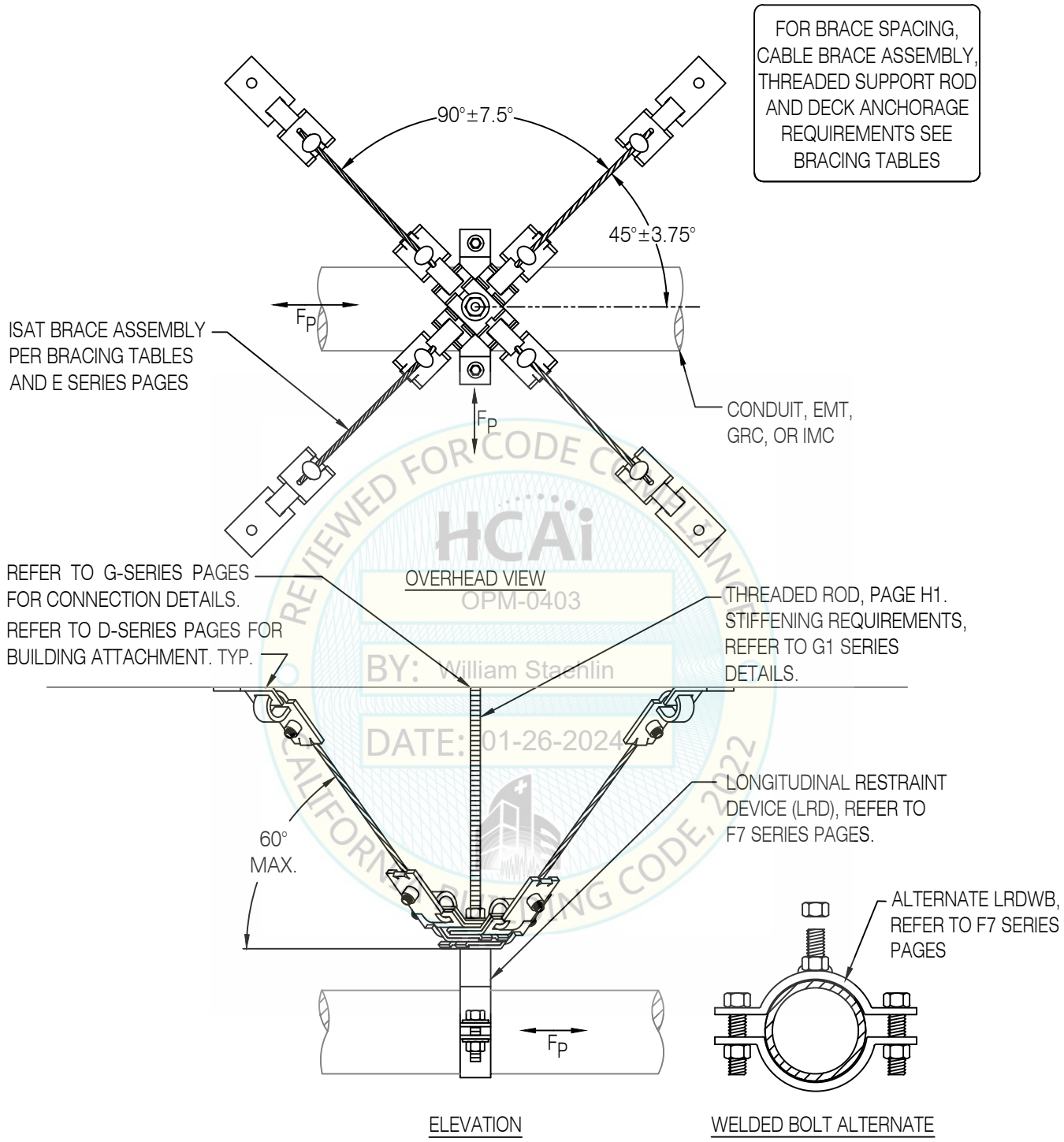

REVIEWED FOR CODE COMPLIANCE
HCAi
OPM-0403
BY: William Staehlin
DATE: 01-26-2024
CALIFORNIA BUILDING CODE, 2022

SINGLE HUNG CONDUIT, WITH LRD
4-WAY SPLAYED, CABLE BRACING

REGISTERED PROFESSIONAL ENGINEER MARCIN WASAZNIK S-6612 STRUCTURAL STATE OF CALIFORNIA

ISAT
A Division of Tomarco Contractor Specialties

International Seismic Application Technology
14848 Northam Street, La Mirada, CA 90638
877-999-4728 (Toll Free) 714-523-0845 (fax)
www.isatsb.com

Rev. 0
12/06/18

Page
B19.23

FOR BRACE SPACING, RIGID BRACE ASSEMBLY, THREADED SUPPORT ROD AND DECK ANCHORAGE REQUIREMENTS SEE BRACING TABLES

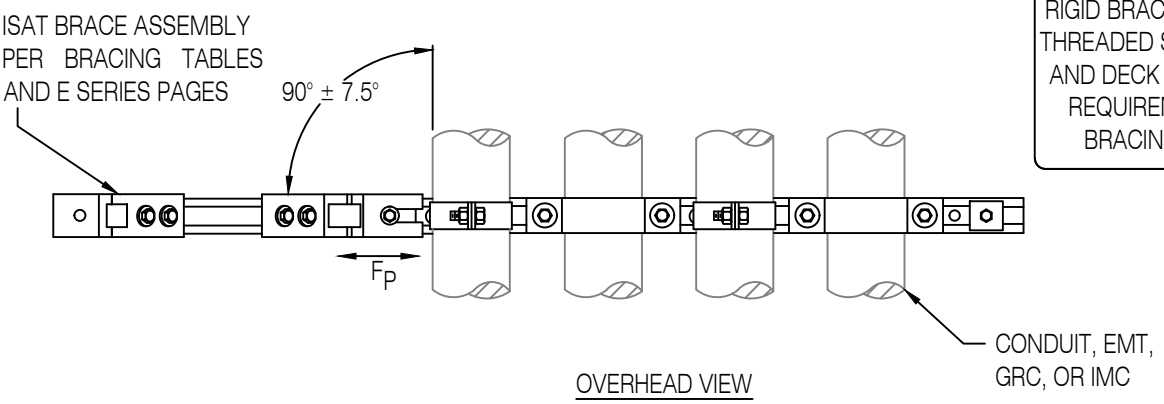

OVERHEAD VIEW

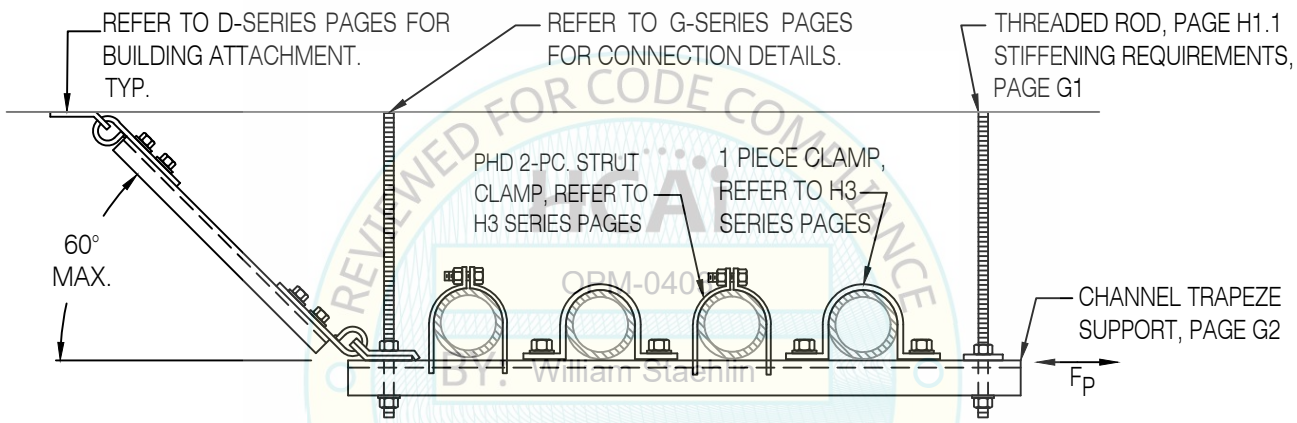

SECTION THRU CONDUIT TRAPEZE RACK - OPTION 1 CONDUIT TIER

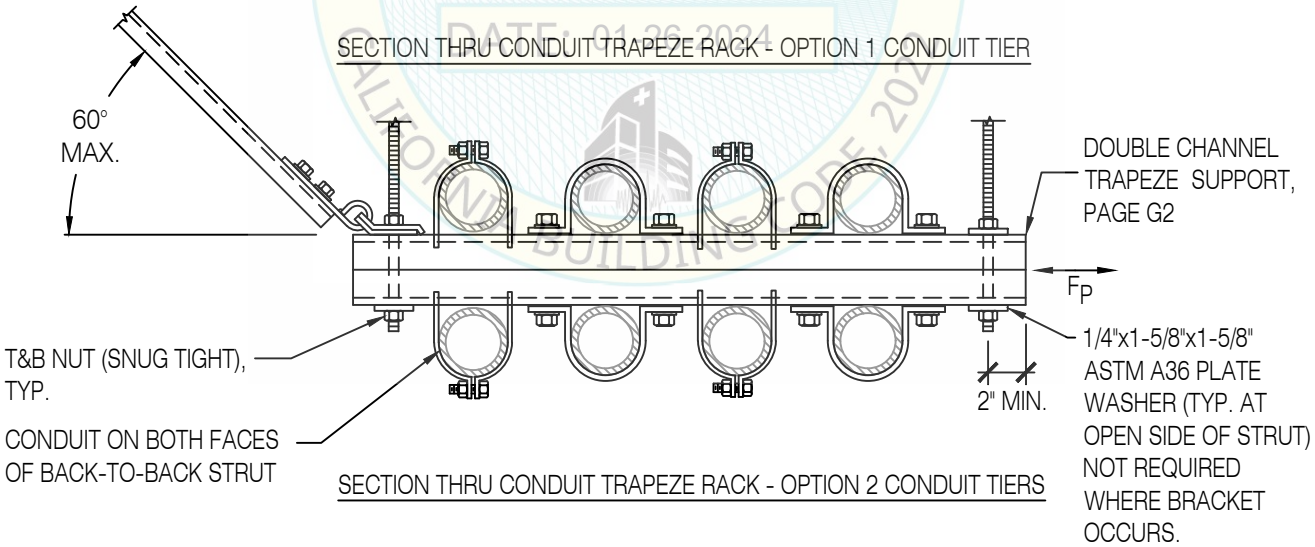

SECTION THRU CONDUIT TRAPEZE RACK - OPTION 2 CONDUIT TIERS

REVIEWED FOR CODE COMPLIANCE
OPM-0403
BY: William Staehlin
DATE: 01-26-2024
CALIFORNIA BUILDING CODE 2022

CONDUIT TRAPEZE RACK
1-WAY TRANSVERSE, RIGID BRACING

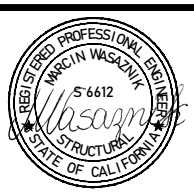

ISAT
A Division of Tomarco Contractor Specialties
International Seismic Application Technology
14848 Northam Street, La Mirada, CA 90638
877-999-4728 (Toll Free) 714-523-0845 (fax)
www.isatsb.com

Rev. 4
06/26/18

Page
B20.0

FOR BRACE SPACING, RIGID BRACE ASSEMBLY, THREADED SUPPORT ROD AND DECK ANCHORAGE REQUIREMENTS SEE BRACING TABLES

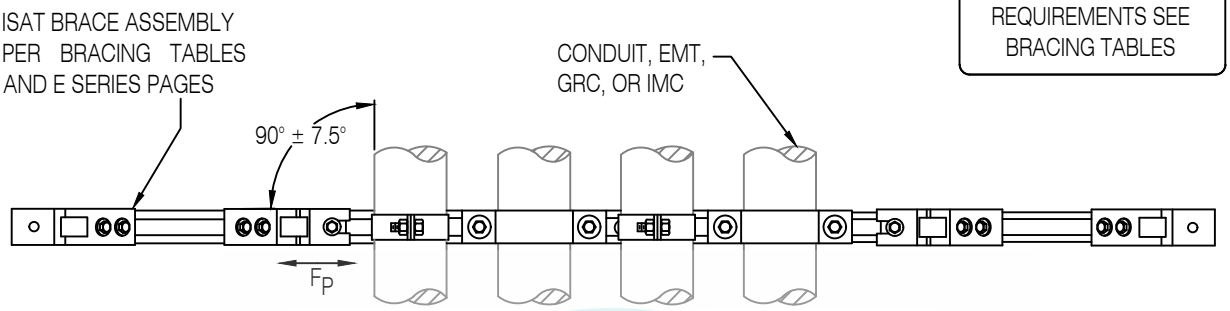

OVERHEAD VIEW

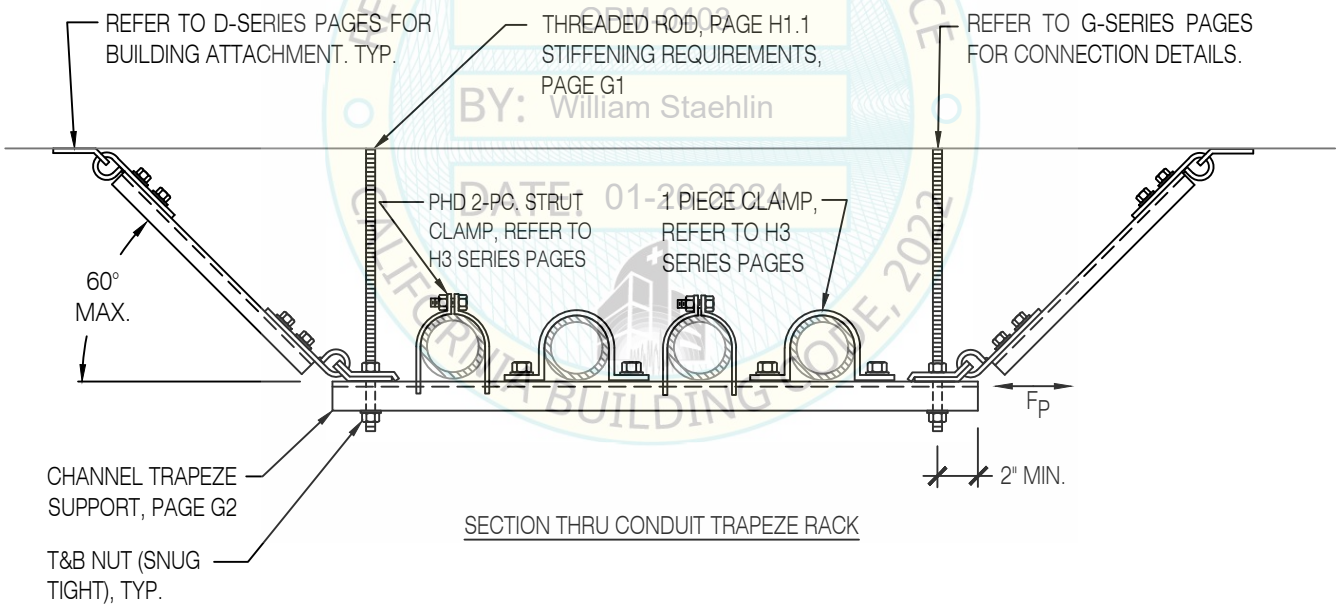

SECTION THRU CONDUIT TRAPEZE RACK

REVIEWED FOR CODE COMPLIANCE
HCAi
OPM-0403
BY: William Staehlin
DATE: 01-26-2024
CALIFORNIA BUILDING CODE, 2022

CONDUIT TRAPEZE RACK
2-WAY TRANSVERSE, RIGID BRACING

REGISTERED PROFESSIONAL ENGINEER MARCIN WASAZNIK S-6612 STRUCTURAL STATE OF CALIFORNIA

ISAT
A Division of Tomarco Contractor Specialties

International Seismic Application Technology
14848 Northam Street, La Mirada, CA 90638
877-999-4728 (Toll Free) 714-523-0845 (fax)
www.isatsb.com

Rev. 3
06/26/18

Page
B20.1

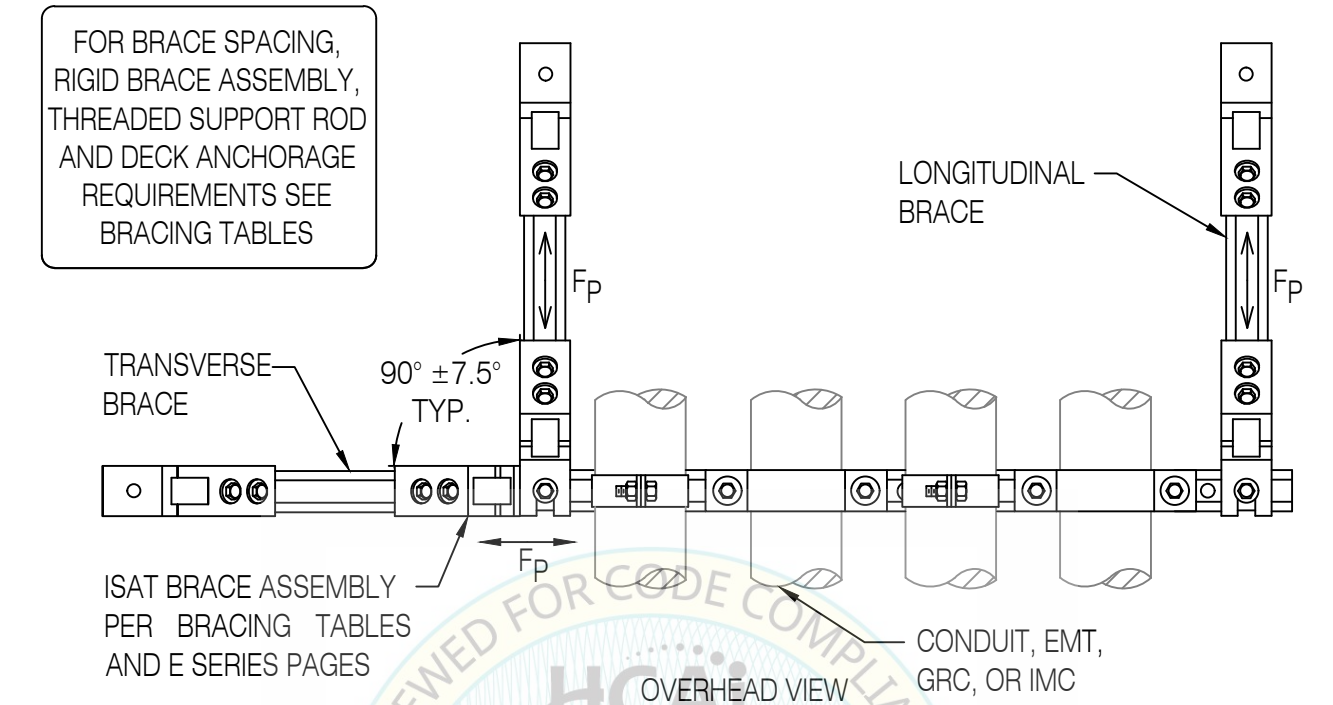

OVERHEAD VIEW

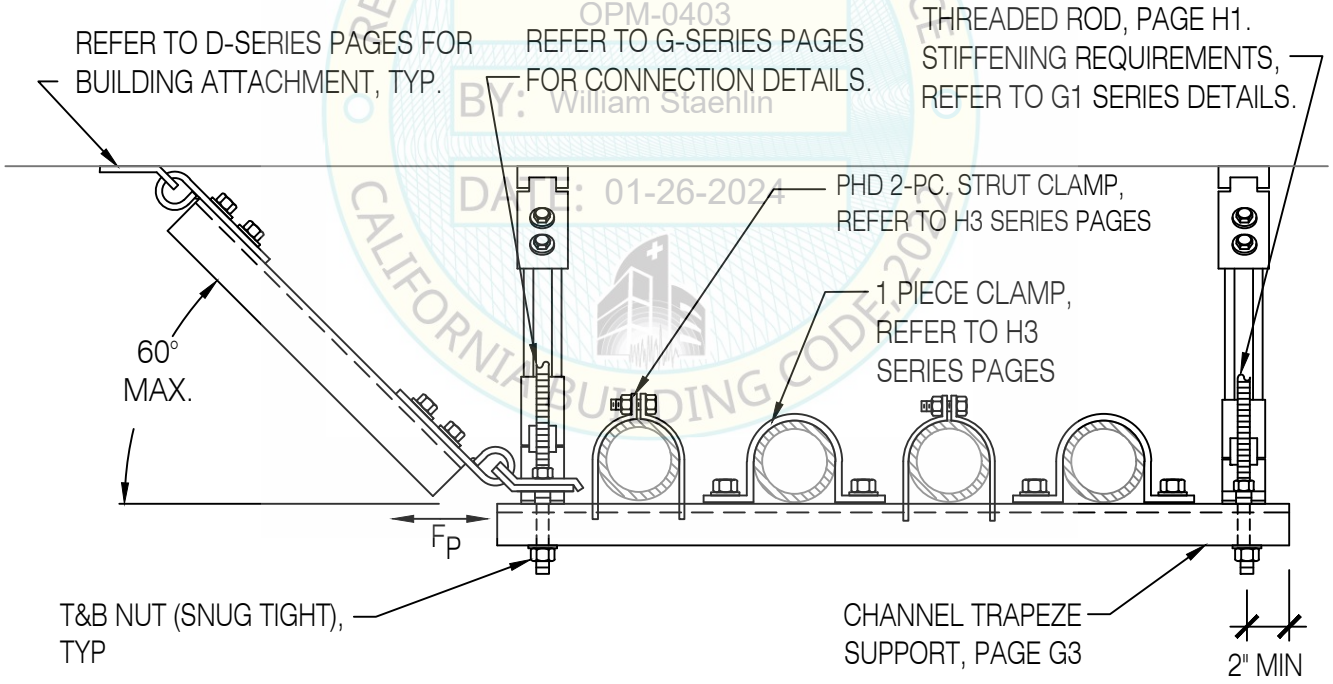

SECTION THRU CONDUIT TRAPEZE RACK

REVIEWED FOR CODE COMPLIANCE
HCAI
OPM-0403
BY: William Staehlin
DATE: 01-26-2024
CALIFORNIA BUILDING CODE 2022

CONDUIT TRAPEZE RACK
3-WAY TRANSVERSE-LONGITUDINAL, RIGID BRACING

REGISTERED PROFESSIONAL ENGINEER MARCIN WASAZNIK S-6612 STRUCTURAL STATE OF CALIFORNIA

ISAT
A Division of Tomarco Contractor Specialties
International Seismic Application Technology
14848 Northam Street, La Mirada, CA 90638
877-999-4728 (Toll Free) 714-523-0845 (fax)
www.isatsb.com

Rev. 3
08/29/23

Page
B20.2

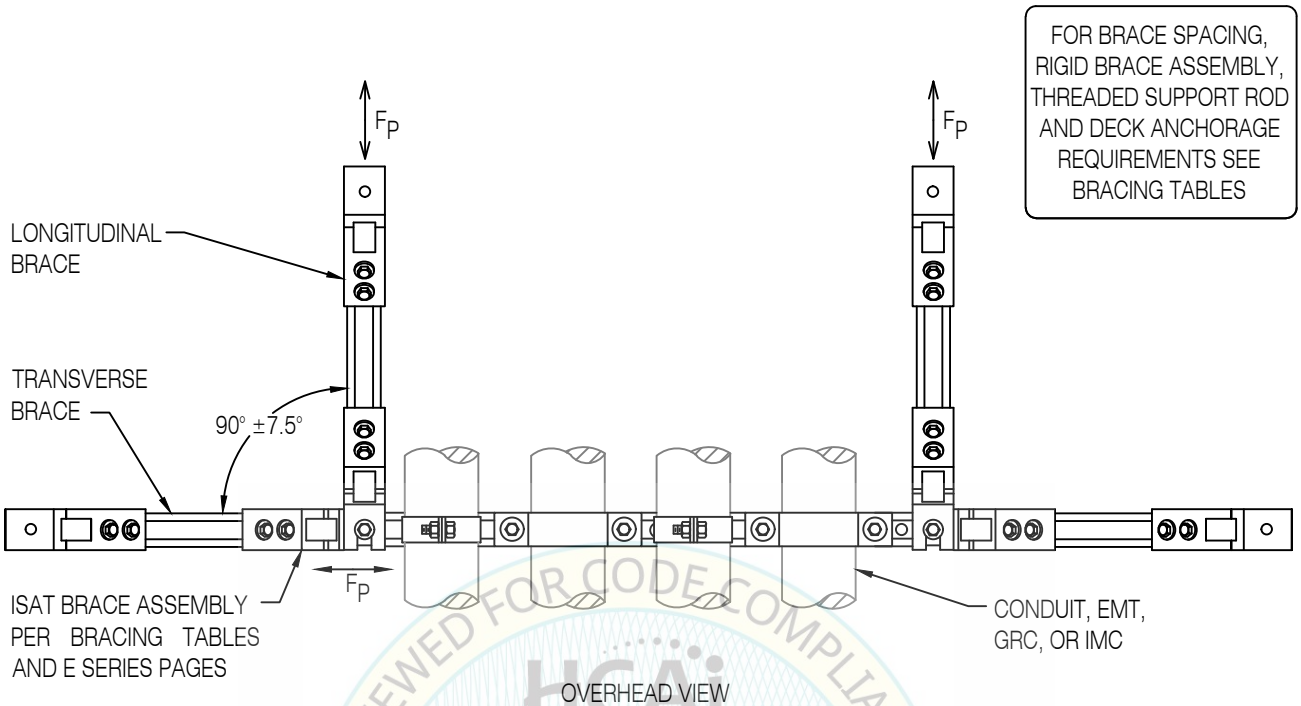

OVERHEAD VIEW

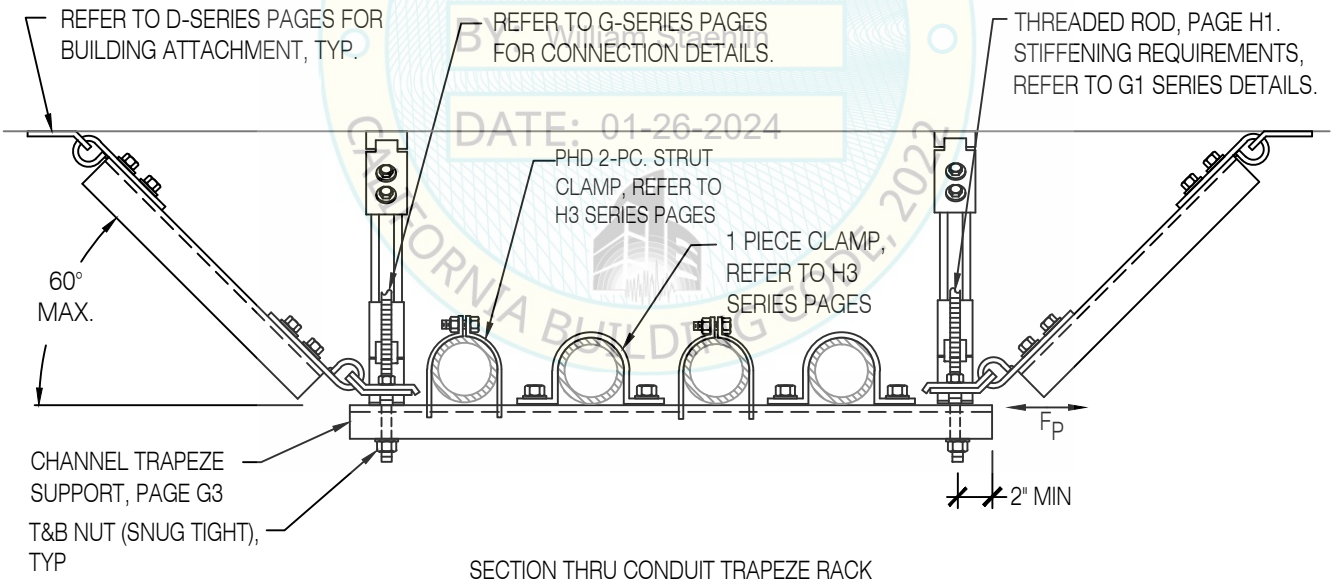

SECTION THRU CONDUIT TRAPEZE RACK

REVIEWED FOR CODE COMPLIANCE
HCAI
OPM-0403
BY: William Staehlin
DATE: 01-26-2024
CALIFORNIA BUILDING CODE, 2022

CONDUIT TRAPEZE RACK
4-WAY TRANSVERSE-LONGITUDINAL, RIGID BRACING

REGISTERED PROFESSIONAL ENGINEER MARCIN WASAZNIK S-6612 STRUCTURAL STATE OF CALIFORNIA

ISAT
A Division of Tomarco Contractor Specialties
International Seismic Application Technology
14848 Northam Street, La Mirada, CA 90638
877-999-4728 (Toll Free) 714-523-0845 (fax)
www.isatsb.com

Rev. 3
08/29/23

Page
B20.3

FOR BRACE SPACING, RIGID BRACE ASSEMBLY, THREADED SUPPORT ROD AND DECK ANCHORAGE REQUIREMENTS SEE BRACING TABLES

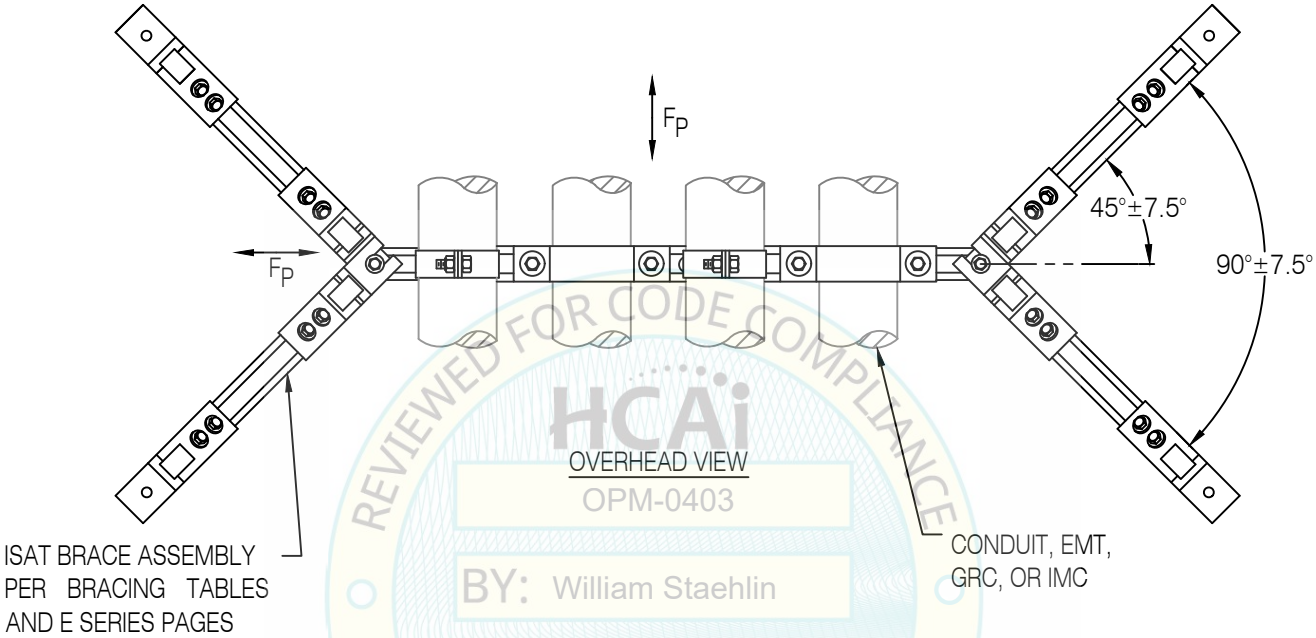

OVERHEAD VIEW

REVIEWED FOR CODE COMPLIANCE
HCAi
OPM-0403
BY: William Staehlin
DATE: 01-26-2024
CALIFORNIA BUILDING CODE, 2022

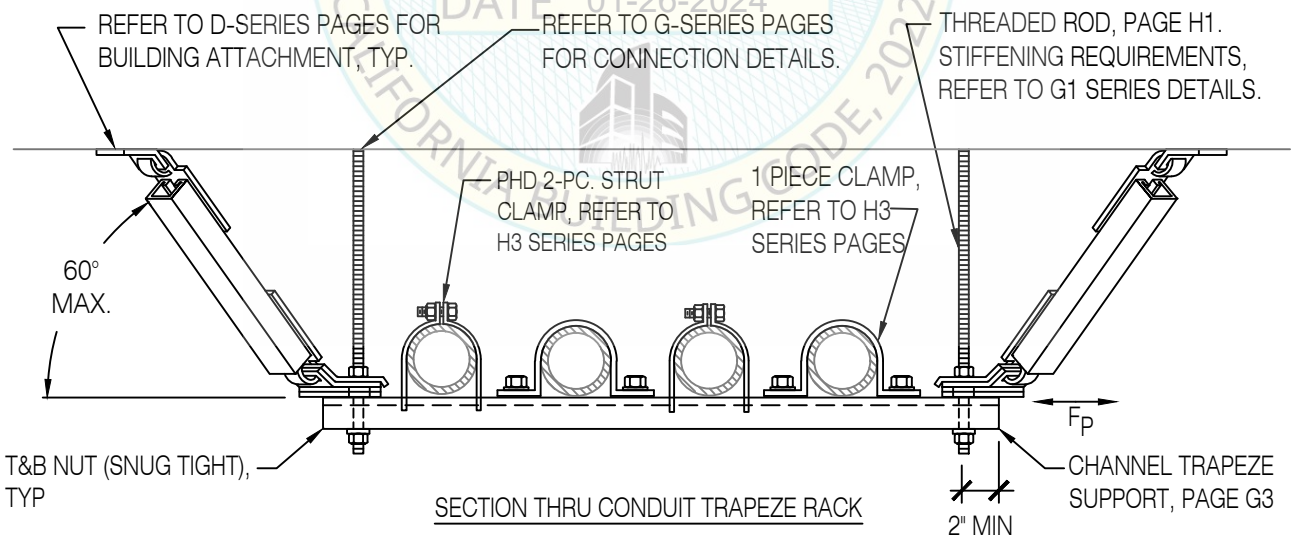

SECTION THRU CONDUIT TRAPEZE RACK

CONDUIT TRAPEZE RACK
4-WAY SPLAYED TRANSVERSE-LONGITUDINAL, RIGID BRACING

REGISTERED PROFESSIONAL ENGINEER MARCIN WASAZNIK S-6612 STRUCTURAL STATE OF CALIFORNIA

ISAT
A Division of Tomarco Contractor Specialties
International Seismic Application Technology
14848 Northam Street, La Mirada, CA 90638
877-999-4728 (Toll Free) 714-523-0845 (fax)
www.isatsb.com

Rev. 3
08/29/23

Page
B20.4

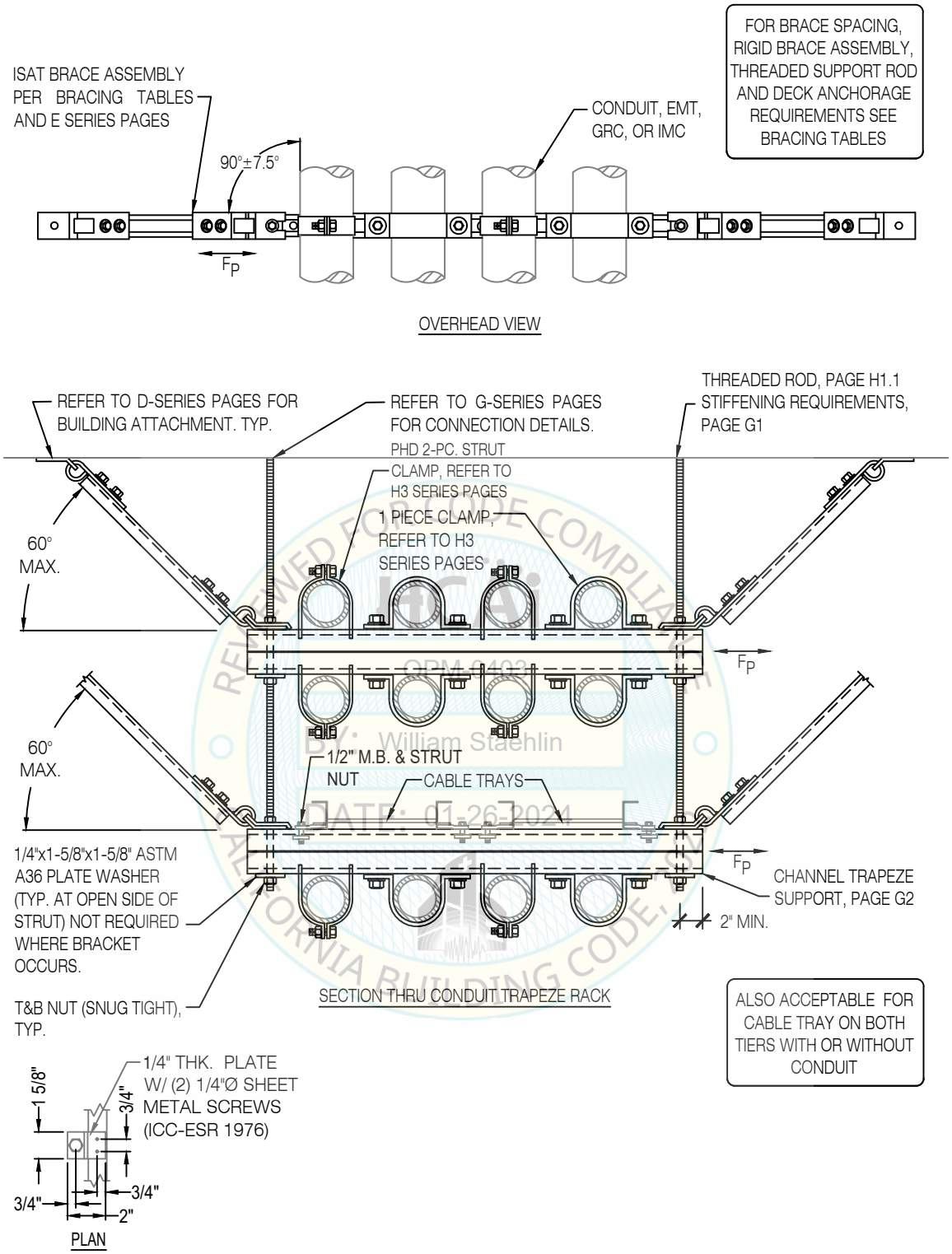

REVIEWED FOR CODE COMPLIANCE
OPM-0403
By: William Staehlin
DATE: 01-26-2024
CALIFORNIA BUILDING CODE

2-TIERED CONDUIT/CABLE TRAY TRAPEZE RACK
2-WAY TRANSVERSE, RIGID BRACING

REGISTERED PROFESSIONAL ENGINEER MARCIN WASAZNIK S-6612 STRUCTURAL STATE OF CALIFORNIA

ISAT
A Division of Tomarco Contractor Specialties
International Seismic Application Technology
14848 Northam Street, La Mirada, CA 90638
877-999-4728 (Toll Free) 714-523-0845 (fax)
www.isatsb.com

Rev. 4
06/26/18

Page
B21.1

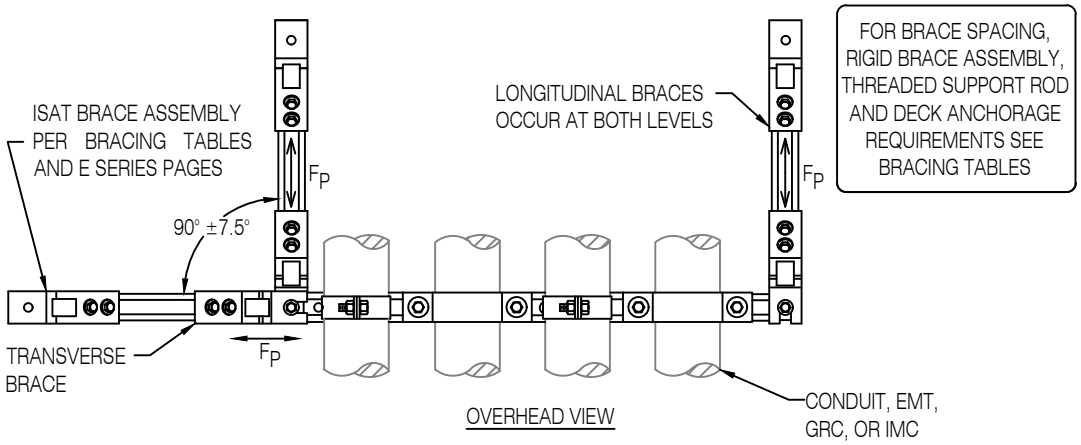

OVERHEAD VIEW

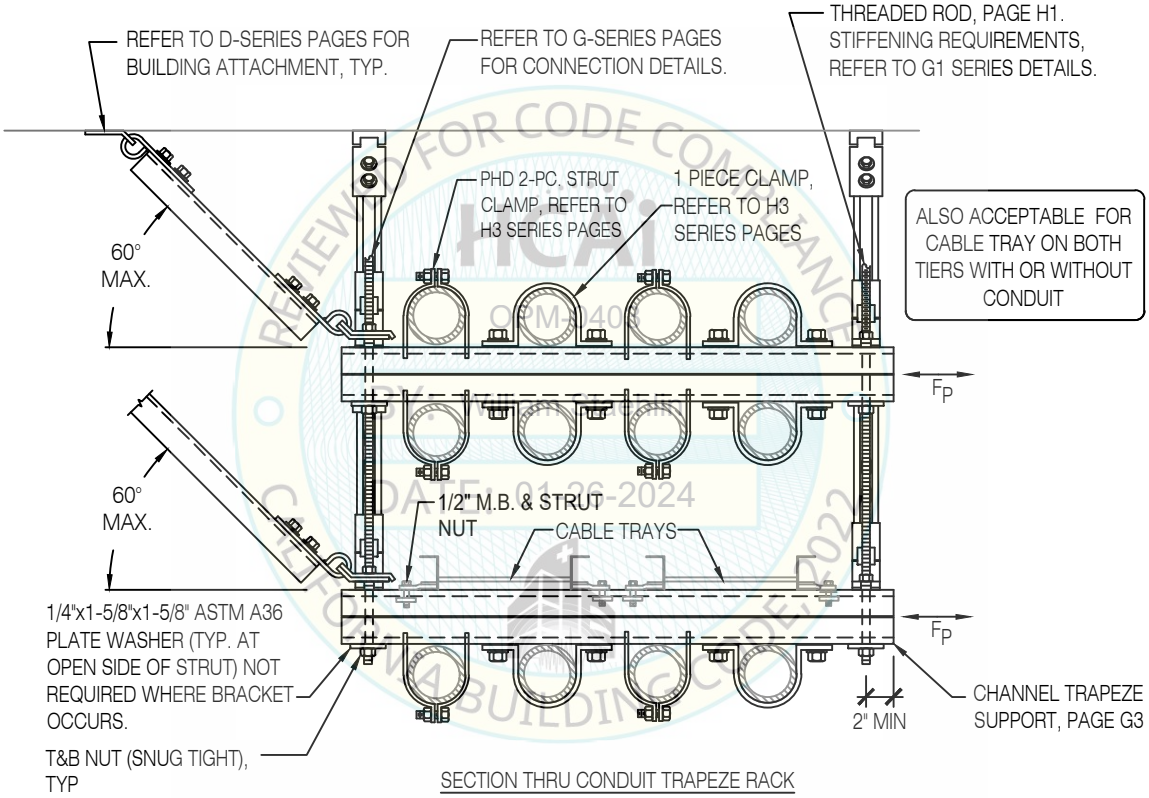

SECTION THRU CONDUIT TRAPEZE RACK

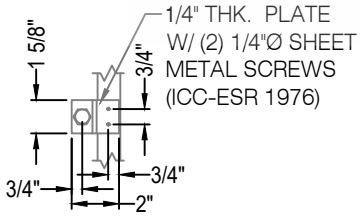

PLAN

2-TIERED CONDUIT/CABLE TRAY TRAPEZE RACK
3-WAY TRANSVERSE-LONGITUDINAL, RIGID BRACING

REGISTERED PROFESSIONAL ENGINEER MARCIN WASAZNIK S-6612 STRUCTURAL STATE OF CALIFORNIA

ISAT
A Division of Tomarco Contractor Specialties

International Seismic Application Technology
14848 Northam Street, La Mirada, CA 90638
877-999-4728 (Toll Free) 714-523-0845 (fax)
www.isatsb.com

Rev. 5
08/29/23

Page
B21.2

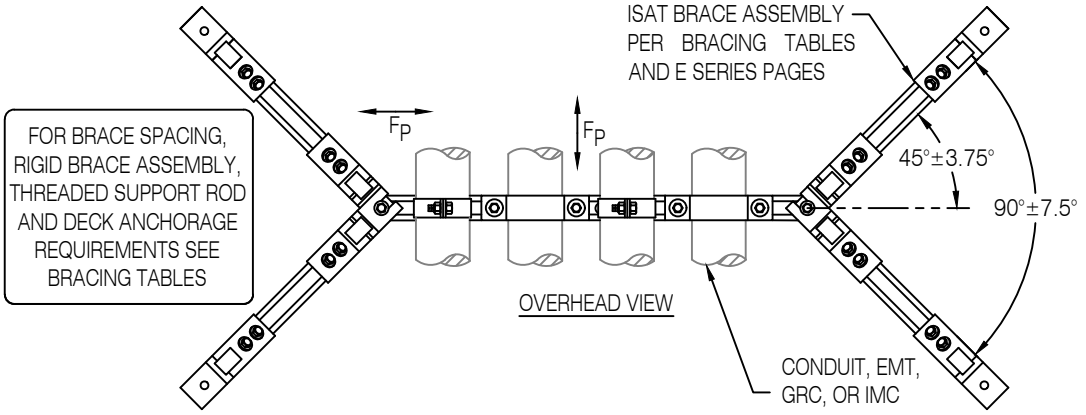

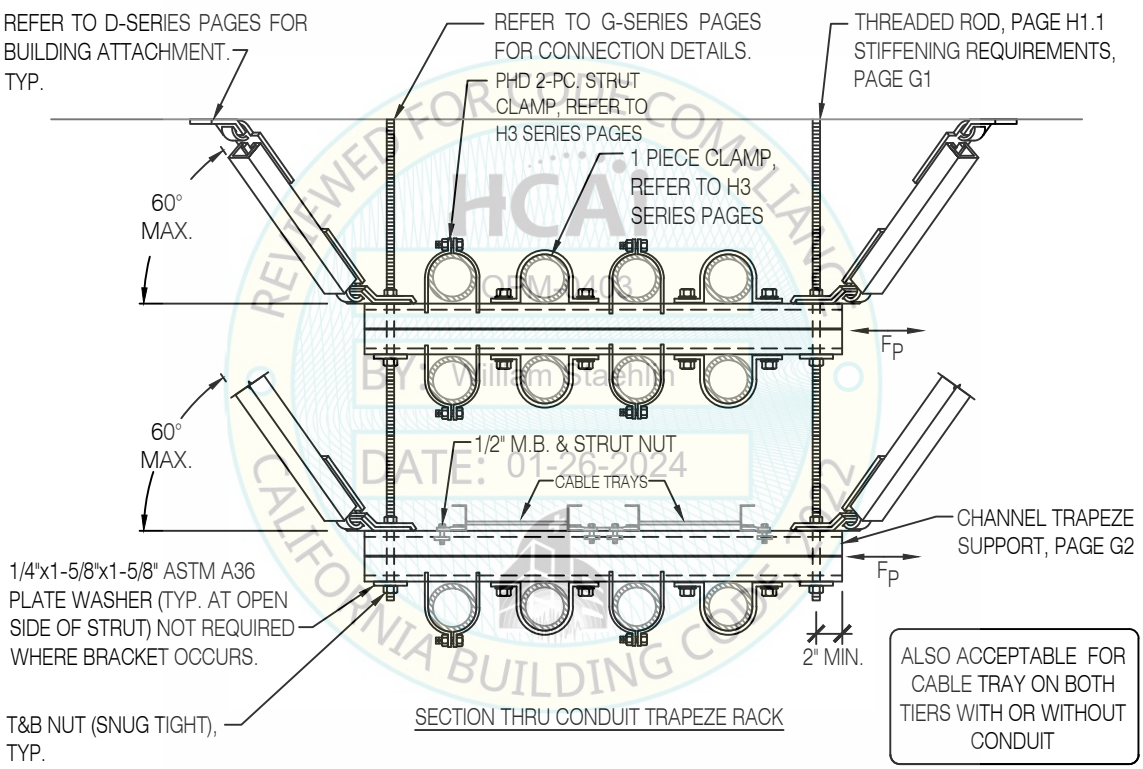

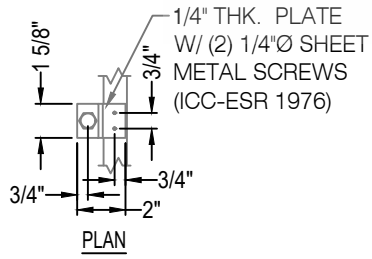

REVIEWED FOR CODE COMPLIANCE
HCA
OPM-0403
BY: William Staehlin
DATE: 01-26-2024
CALIFORNIA BUILDING CODE

2-TIERED CONDUIT/CABLE TRAY TRAPEZE RACK
4-WAY SPLAYED, RIGID BRACING

REGISTERED PROFESSIONAL ENGINEER MARCIN WASAZNIK S-6612 STRUCTURAL STATE OF CALIFORNIA

ISAT
A Division of Tomarco Contractor Specialties
International Seismic Application Technology
14848 Northam Street, La Mirada, CA 90638
877-999-4728 (Toll Free) 714-523-0845 (fax)
www.isatsb.com

Rev. 4
06/26/18

Page
B21.4

FOR BRACE SPACING, RIGID BRACE ASSEMBLY, THREADED SUPPORT ROD AND DECK ANCHORAGE REQUIREMENTS SEE BRACING TABLES

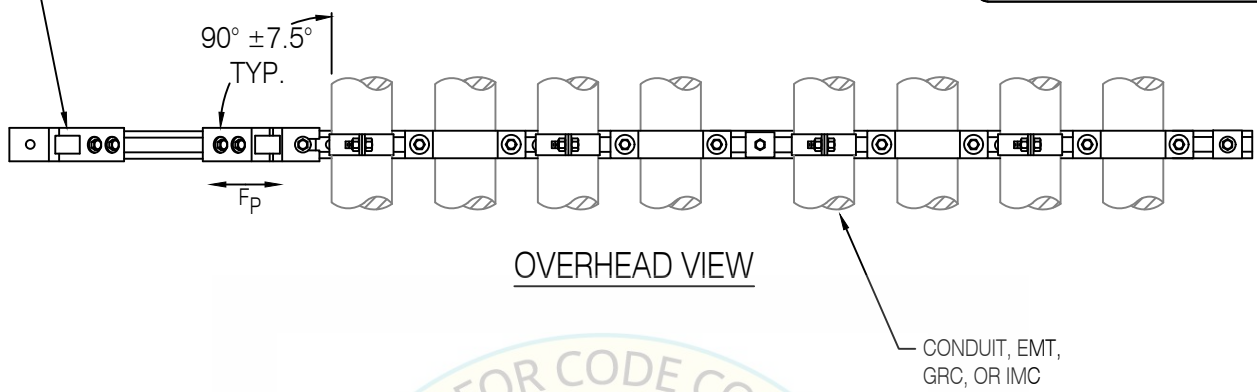

OVERHEAD VIEW

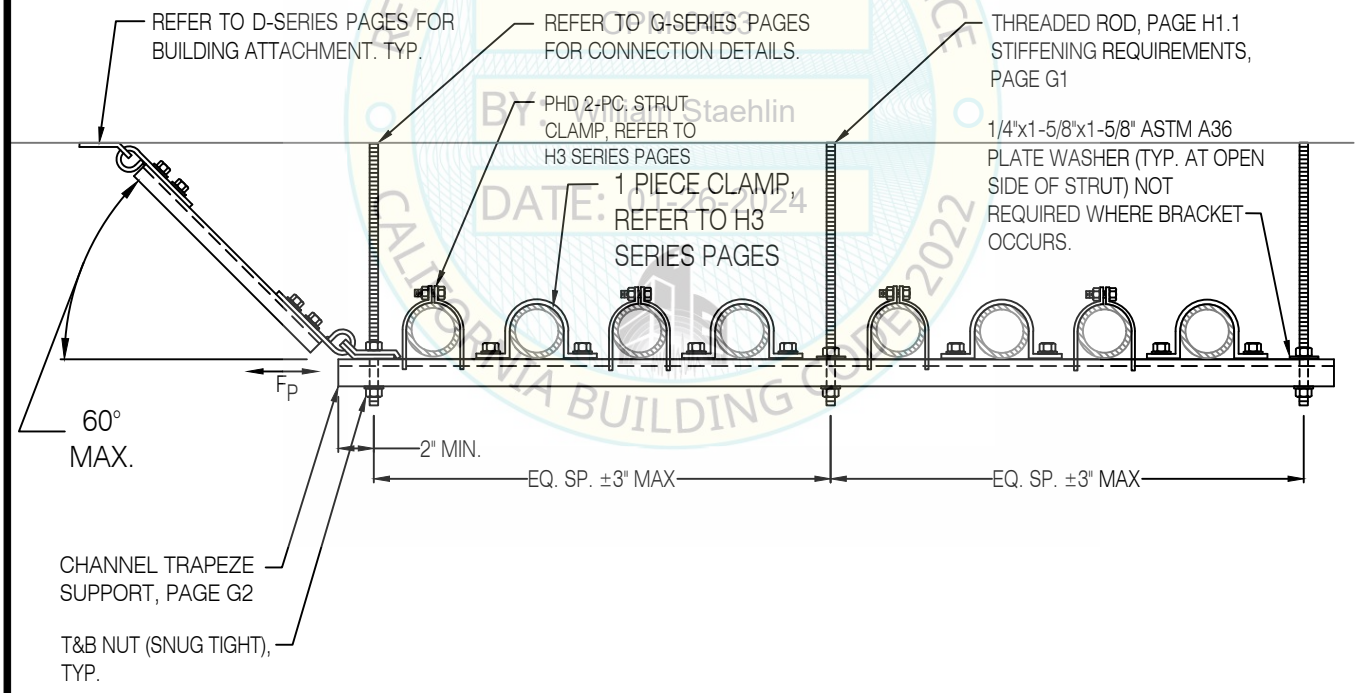

SECTION THRU CONDUIT TRAPEZE RACK

REVIEWED FOR CODE COMPLIANCE
HCAi
BY: William Staehlin
DATE: 01/26/2024
CALIFORNIA BUILDING CODE 2022

3-ROD CONDUIT TRAPEZE RACK
1-WAY TRANSVERSE, RIGID BRACING

ISAT
A Division of Tomarco Contractor Specialties
International Seismic Application Technology
14848 Northam Street, La Mirada, CA 90638
877-999-4728 (Toll Free) 714-523-0845 (fax)
www.isatsb.com

Rev. 2
06/26/18

Page
B22.0

FOR BRACE SPACING, RIGID BRACE ASSEMBLY, THREADED SUPPORT ROD AND DECK ANCHORAGE REQUIREMENTS SEE BRACING TABLES

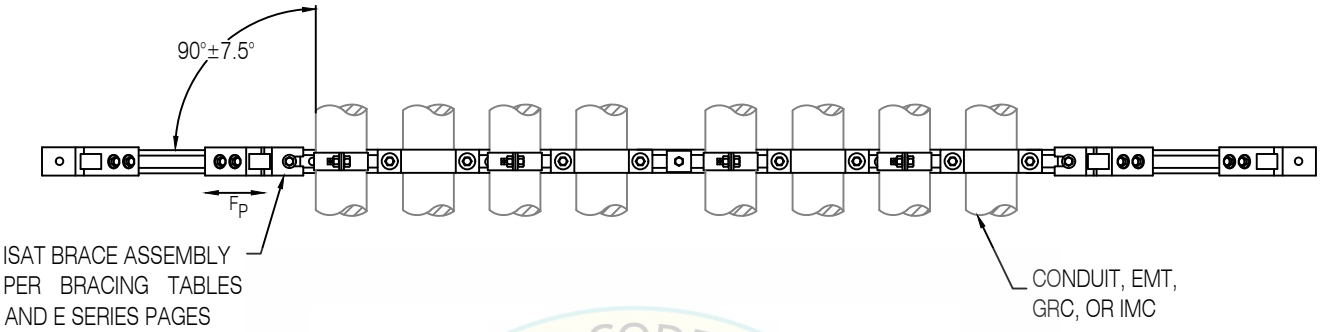

OVERHEAD VIEW

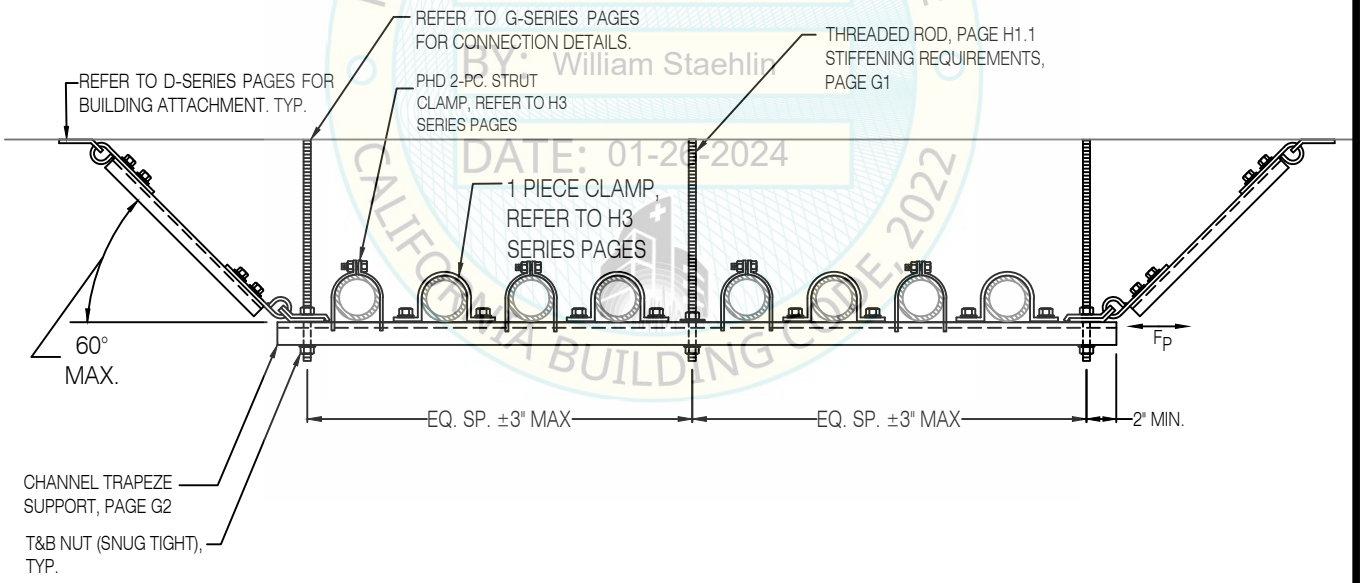

SECTION THRU CONDUIT TRAPEZE RACK

REVIEWED FOR CODE COMPLIANCE
HCAi
OPM-0403
BY: William Staehlin
DATE: 01-26-2024
CALIFORNIA BUILDING CODE 2022

3-ROD CONDUIT TRAPEZE RACK
2-WAY TRANSVERSE, RIGID BRACING

REGISTERED PROFESSIONAL ENGINEER MARCIN WASAZNIK S-6612 STRUCTURAL STATE OF CALIFORNIA

ISAT
A Division of Tomarco Contractor Specialties

International Seismic Application Technology
14848 Northam Street, La Mirada, CA 90638
877-999-4728 (Toll Free) 714-523-0845 (fax)
www.isatsb.com

Rev. 3
06/26/18

Page
B22.1

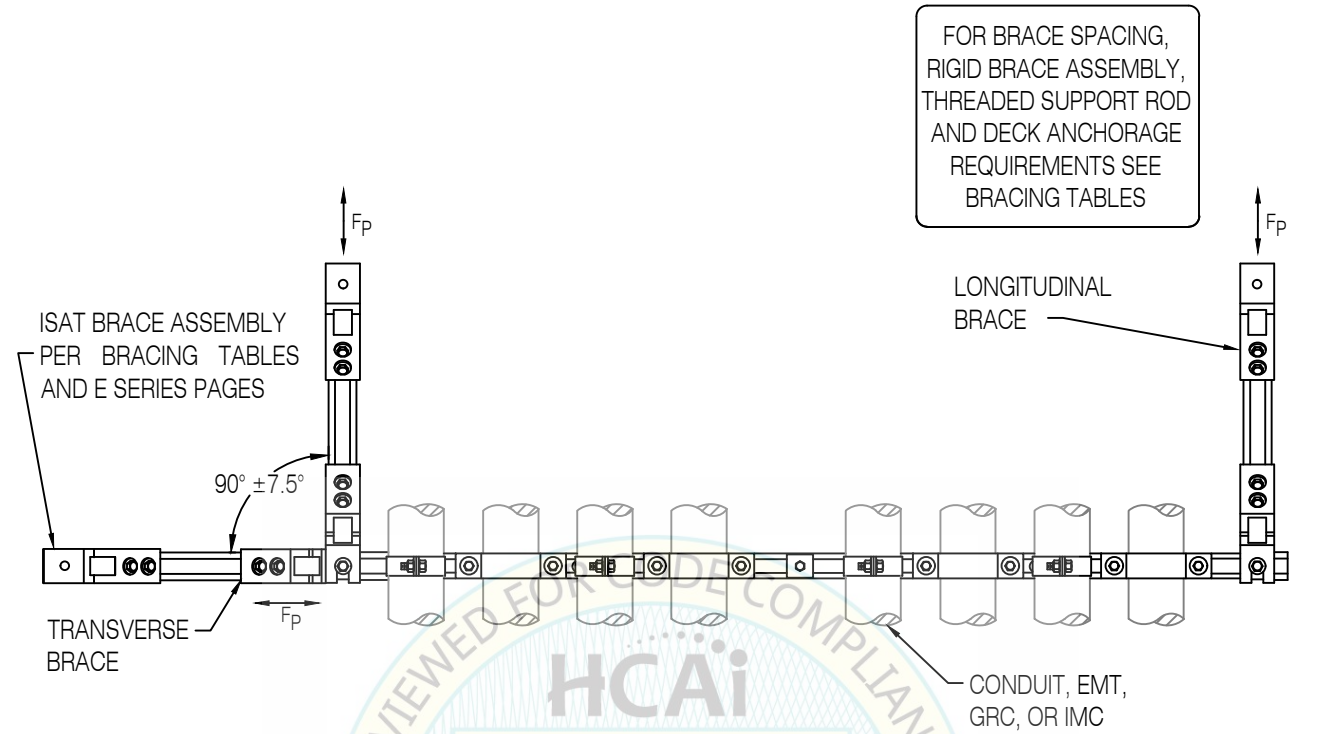

OVERHEAD VIEW

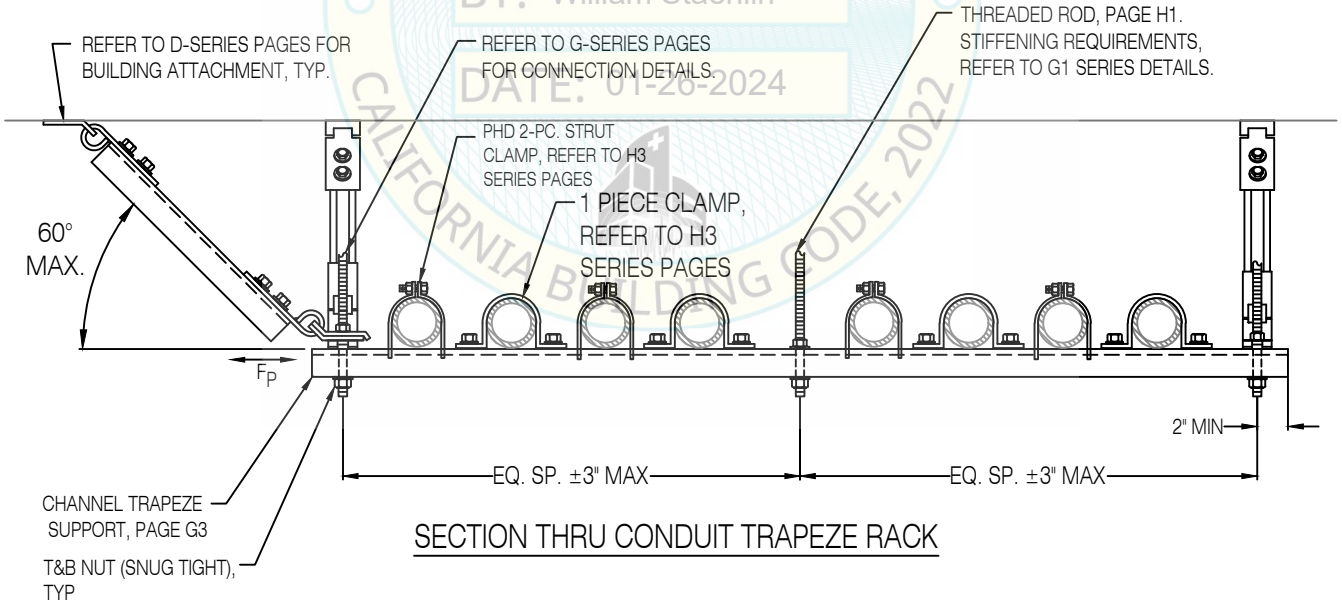

SECTION THRU CONDUIT TRAPEZE RACK

REVIEWED FOR CODE COMPLIANCE
HCAi
OPM-0403
BY: William Staehlin
DATE: 01-26-2024
CALIFORNIA BUILDING CODE, 2022

3-ROD CONDUIT TRAPEZE RACK
3-WAY TRANSVERSE-LONGITUDINAL, RIGID BRACING

REGISTERED PROFESSIONAL ENGINEER MARCIN WASAZNIK S-6612 STRUCTURAL STATE OF CALIFORNIA

ISAT
A Division of Tomarco Contractor Specialties
International Seismic Application Technology
14848 Northam Street, La Mirada, CA 90638
877-999-4728 (Toll Free) 714-523-0845 (fax)
www.isatsb.com

Rev. 3
08/29/23

Page
B22.2

FOR BRACE SPACING, RIGID BRACE ASSEMBLY, THREADED SUPPORT ROD AND DECK ANCHORAGE REQUIREMENTS SEE BRACING TABLES

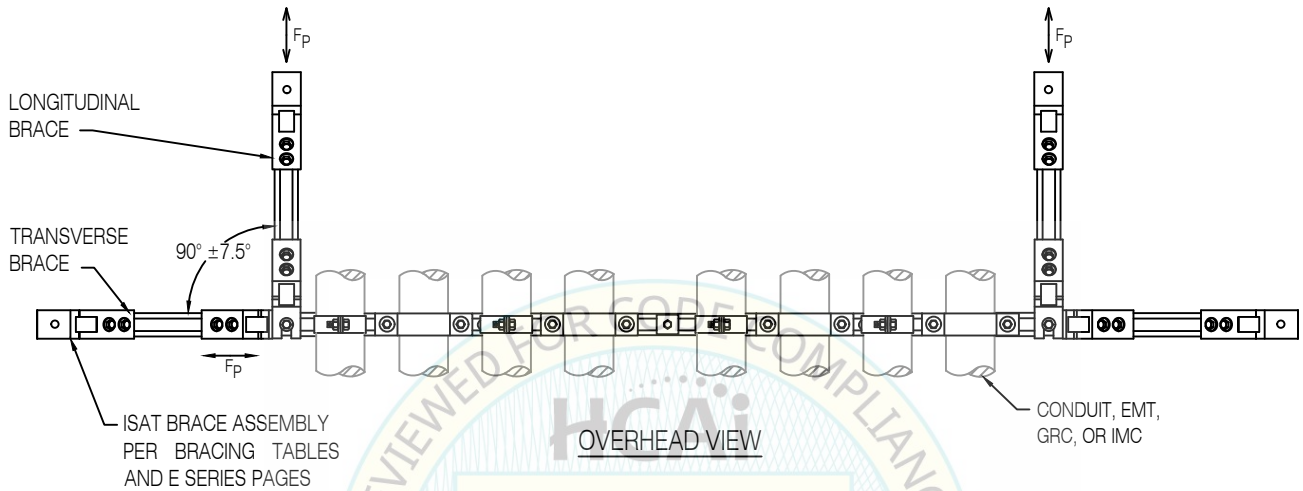

OVERHEAD VIEW

REVIEWED FOR CODE COMPLIANCE
HCAi
OPM-0403
BY: William Staehlin
DATE: 01-26-2024
CALIFORNIA BUILDING CODE, 2022

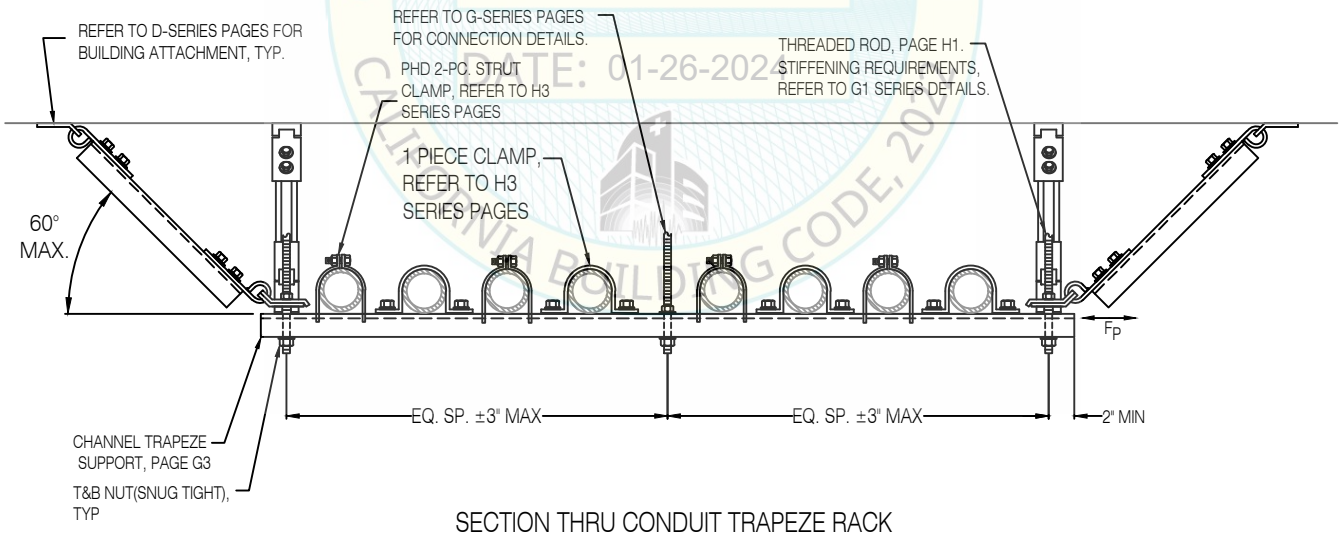

SECTION THRU CONDUIT TRAPEZE RACK

3-ROD CONDUIT TRAPEZE RACK
4-WAY TRANSVERSE-LONGITUDINAL, RIGID BRACING

REGISTERED PROFESSIONAL ENGINEER MARCIN WASAZNIK S-6612 STRUCTURAL STATE OF CALIFORNIA

ISAT
A Division of Tomarco Contractor Specialties
International Seismic Application Technology
14848 Northam Street, La Mirada, CA 90638
877-999-4728 (Toll Free) 714-523-0845 (fax)
www.isatsb.com

Rev. 3
08/29/23

Page
B22.3

FOR BRACE SPACING, RIGID BRACE ASSEMBLY, THREADED SUPPORT ROD AND DECK ANCHORAGE REQUIREMENTS SEE BRACING TABLES

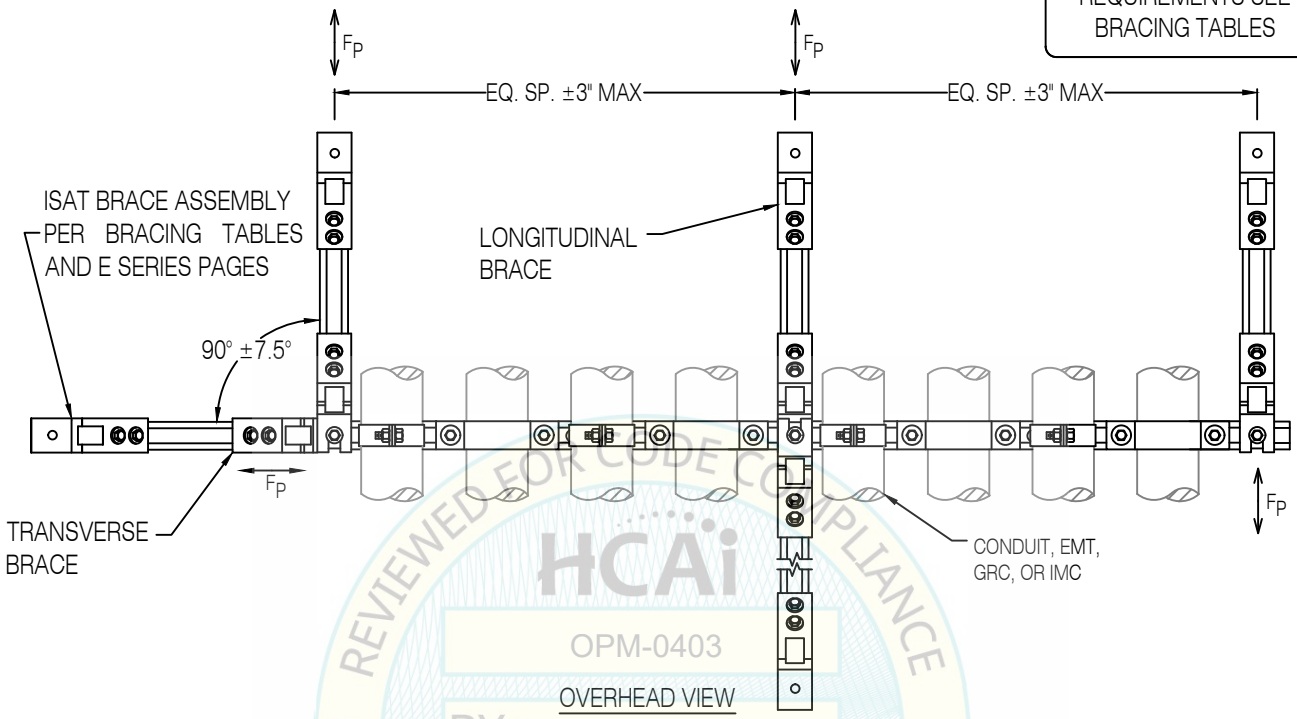

OVERHEAD VIEW

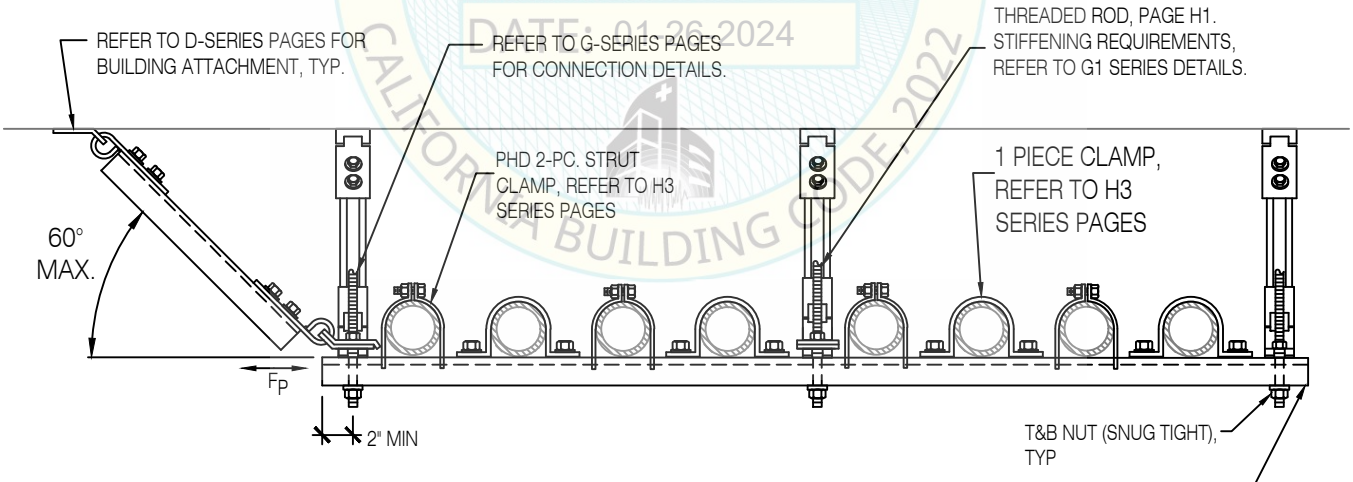

SECTION THRU CONDUIT TRAPEZE RACK

HCAi
OPM-0403
BY: William Staehlin
DATE: 01-26-2024
REVIEWED FOR CODE COMPLIANCE
CALIFORNIA BUILDING CODE 2022

3-ROD CONDUIT TRAPEZE RACK
5-WAY TRANSVERSE-LONGITUDINAL, RIGID BRACING

REGISTERED PROFESSIONAL ENGINEER MARCIN WASAZNIK S-6612 STRUCTURAL STATE OF CALIFORNIA

ISAT
A Division of Tomarco Contractor Specialties
International Seismic Application Technology
14848 Northam Street, La Mirada, CA 90638
877-999-4728 (Toll Free) 714-523-0845 (fax)
www.isatsb.com

Rev. 4
08/29/23

Page
B22.4

FOR BRACE SPACING, RIGID BRACE ASSEMBLY, THREADED SUPPORT ROD AND DECK ANCHORAGE REQUIREMENTS SEE BRACING TABLES

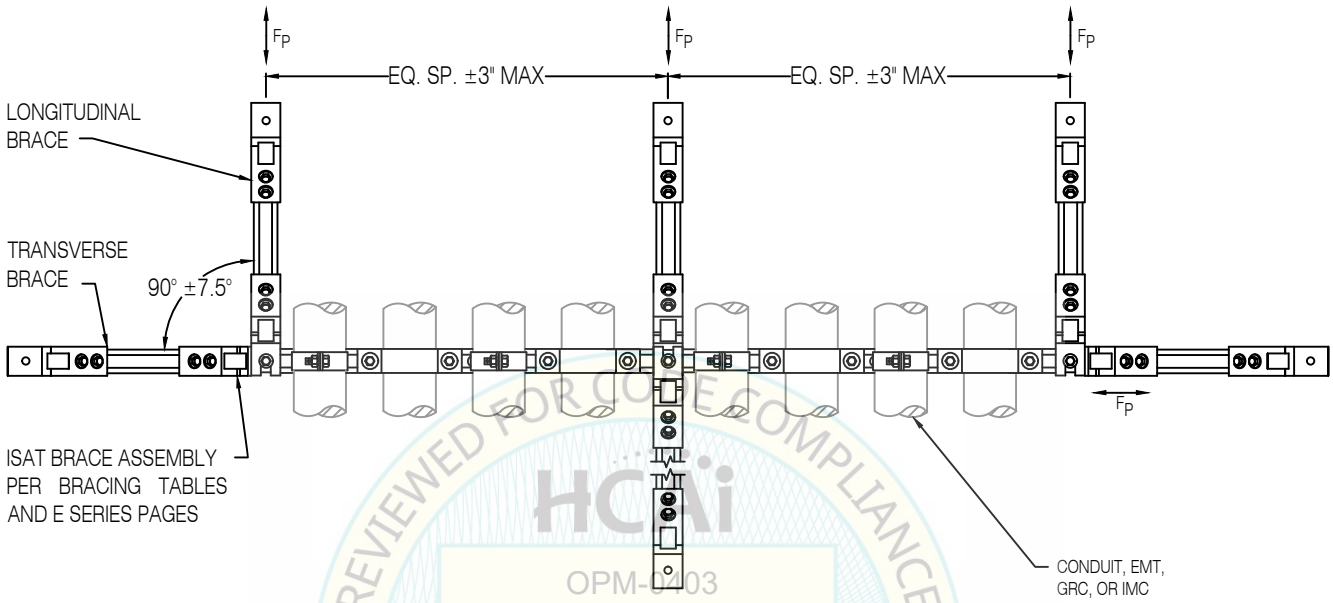

OVERHEAD VIEW

REVIEWED FOR CODE COMPLIANCE
HCAi
OPM-0403
BY: William Staehlin
DATE: 01-26-2024
CALIFORNIA BUILDING CODE 2022

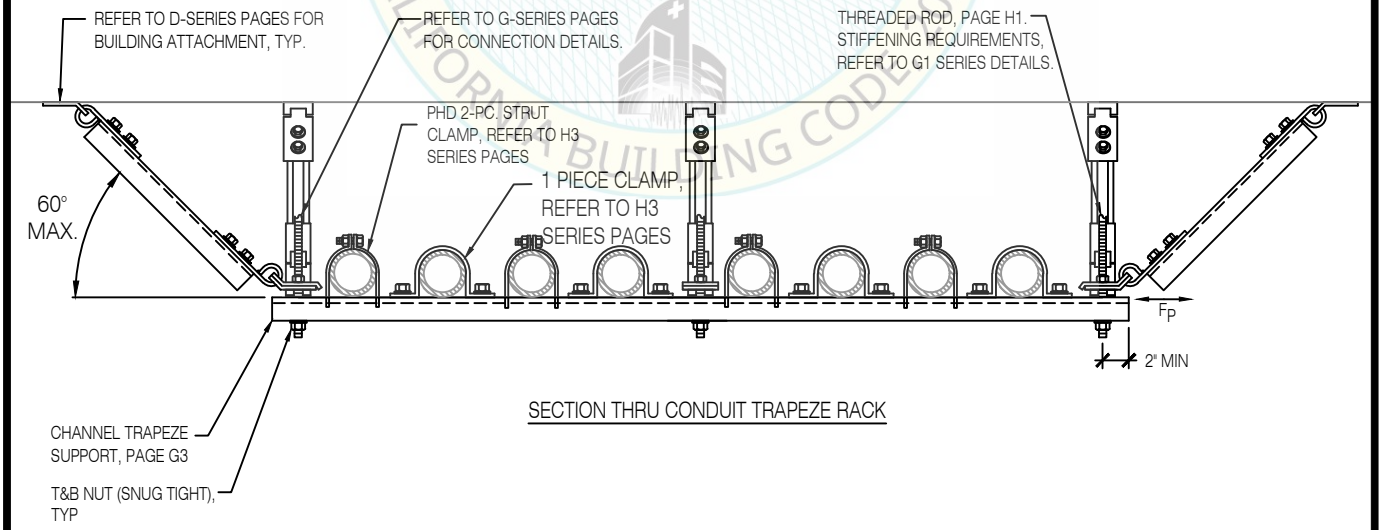

SECTION THRU CONDUIT TRAPEZE RACK

3-ROD CONDUIT TRAPEZE RACK
6-WAY TRANSVERSE-LONGITUDINAL, RIGID BRACING

REGISTERED PROFESSIONAL ENGINEER MARCIN WASAZNIK S 6612 STRUCTURAL STATE OF CALIFORNIA

ISAT
A Division of Tomarco Contractor Specialties

International Seismic Application Technology
14848 Northam Street, La Mirada, CA 90638
877-999-4728 (Toll Free) 714-523-0845 (fax)
www.isatsb.com

Rev. 3
08/29/23

Page
B22.5

ALSO ACCEPTABLE FOR CABLE TRAY ON BOTH TIERS WITH OR WITHOUT CONDUIT

FOR BRACE SPACING, RIGID BRACE ASSEMBLY, THREADED SUPPORT ROD AND DECK ANCHORAGE REQUIREMENTS SEE BRACING TABLES

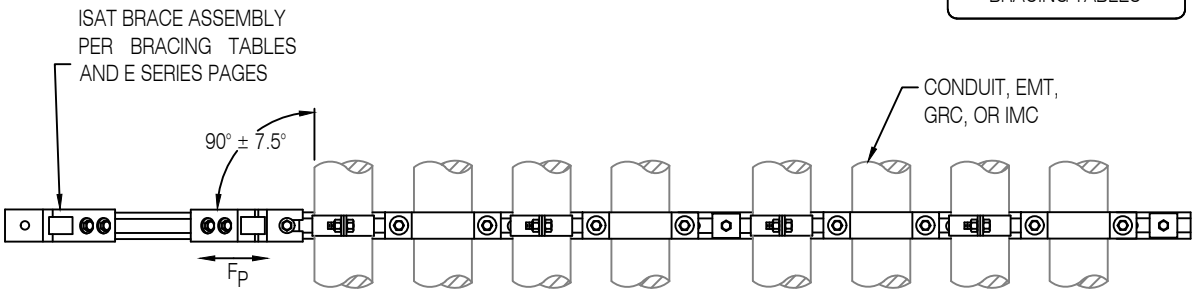

OVERHEAD VIEW

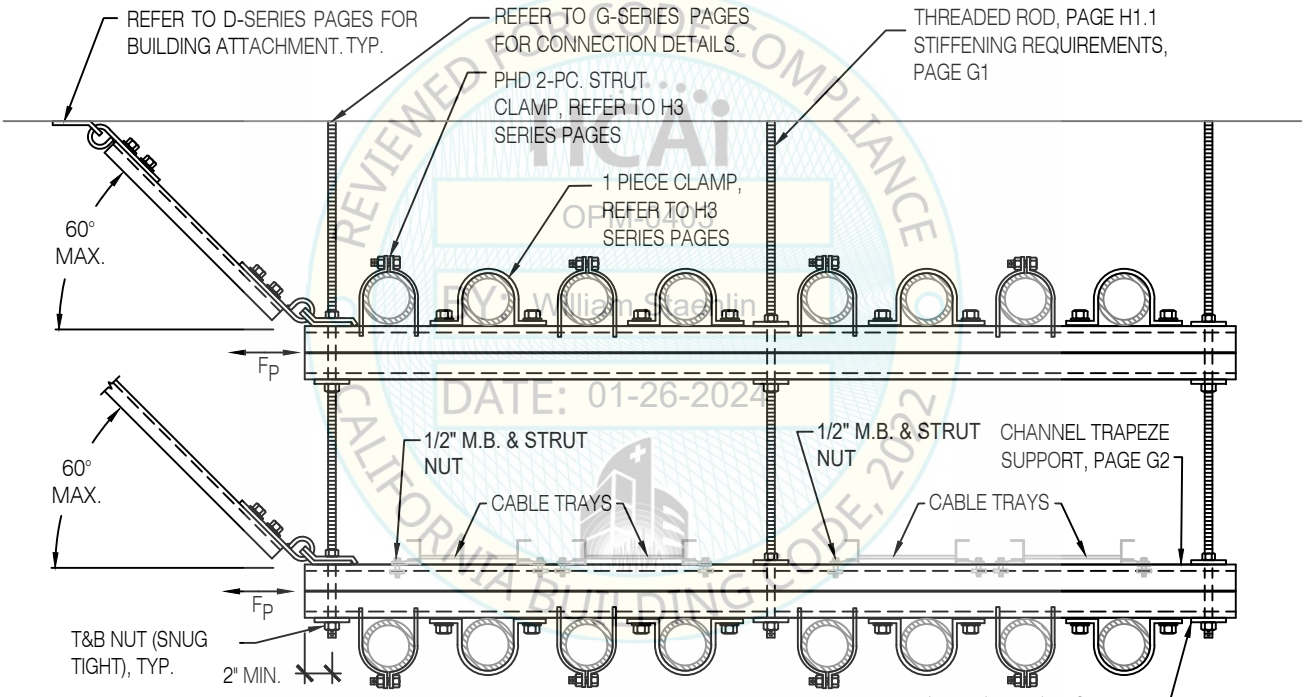

SECTION THRU CONDUIT TRAPEZE RACK

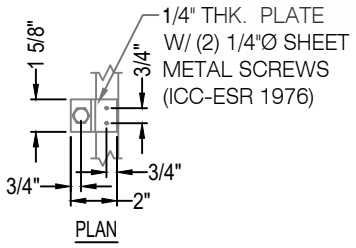

PLAN

3-ROD, 2-TIERED CONDUIT/CABLE TRAY TRAPEZE RACK
1-WAY TRANSVERSE, RIGID BRACING

REVIEWED FOR CODE COMPLIANCE
ICAI
OPM-0403
BY: William Staehlin
DATE: 01-26-2024
CALIFORNIA BUILDING CODE, 2022

REGISTERED PROFESSIONAL ENGINEER MARCIN WASAZNIK S-6612 STRUCTURAL STATE OF CALIFORNIA

ISAT
A Division of Tomarco Contractor Specialties
International Seismic Application Technology
14848 Northam Street, La Mirada, CA 90638
877-999-4728 (Toll Free) 714-523-0845 (fax)
www.isatsb.com

Rev. 4
06/26/18

Page
B23.0

ALSO ACCEPTABLE FOR CABLE TRAY ON BOTH TIERS WITH OR WITHOUT CONDUIT

FOR BRACE SPACING, RIGID BRACE ASSEMBLY, THREADED SUPPORT ROD AND DECK ANCHORAGE REQUIREMENTS SEE BRACING TABLES

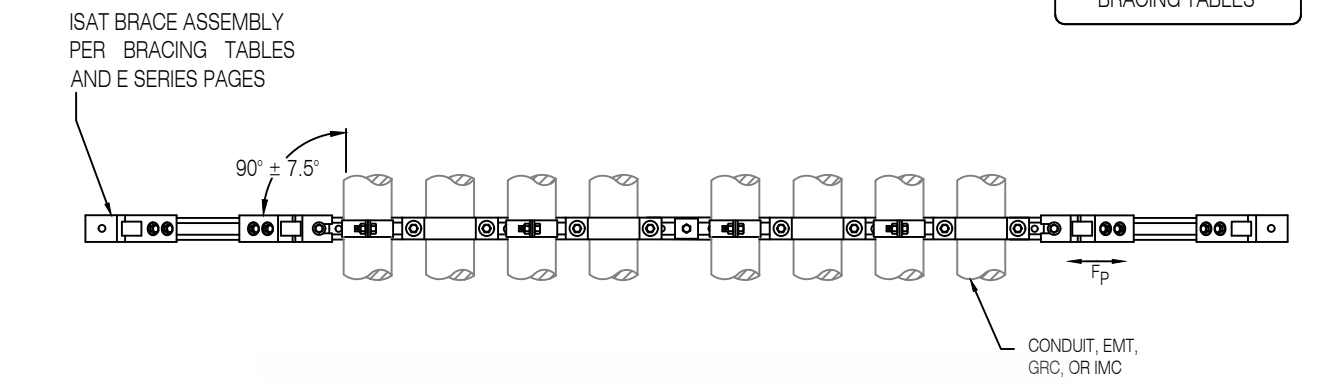

OVERHEAD VIEW

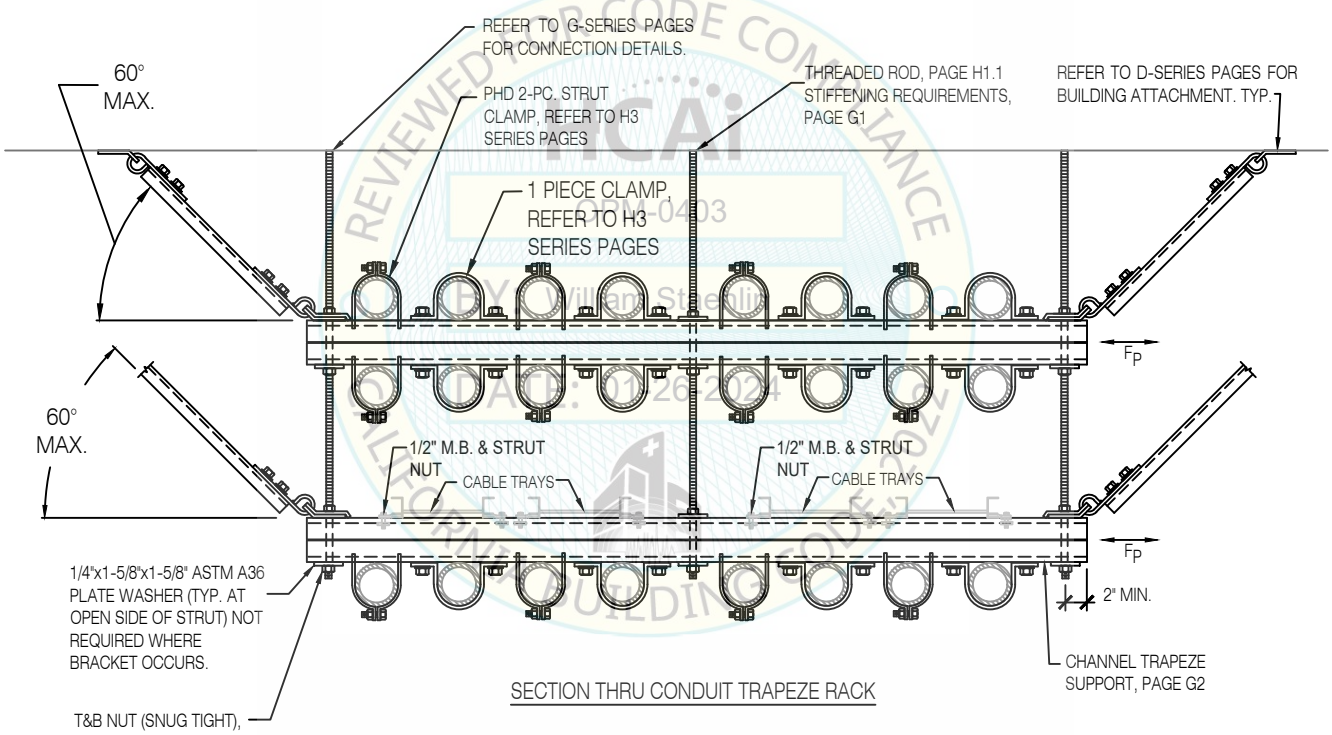

SECTION THRU CONDUIT TRAPEZE RACK

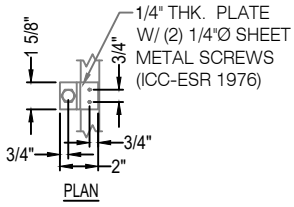

PLAN

3-ROD, 2-TIERED CONDUIT/CABLE TRAY TRAPEZE RACK
2-WAY TRANSVERSE, RIGID BRACING

REGISTERED PROFESSIONAL ENGINEER MARCIN WASAZNIK S-6612 STRUCTURAL STATE OF CALIFORNIA

ISAT
A Division of Tomarco Contractor Specialties

International Seismic Application Technology
14848 Northam Street, La Mirada, CA 90638
877-999-4728 (Toll Free) 714-523-0845 (fax)
www.isatsb.com

Rev. 4
06/26/18

Page
B23.1

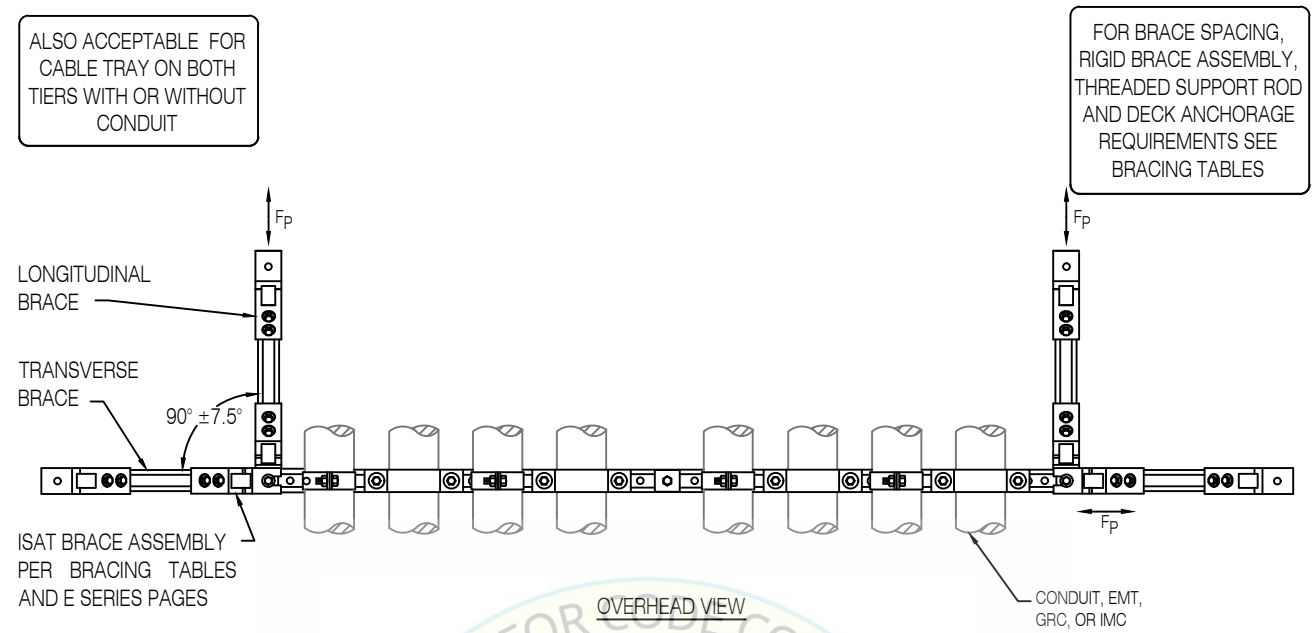

OVERHEAD VIEW

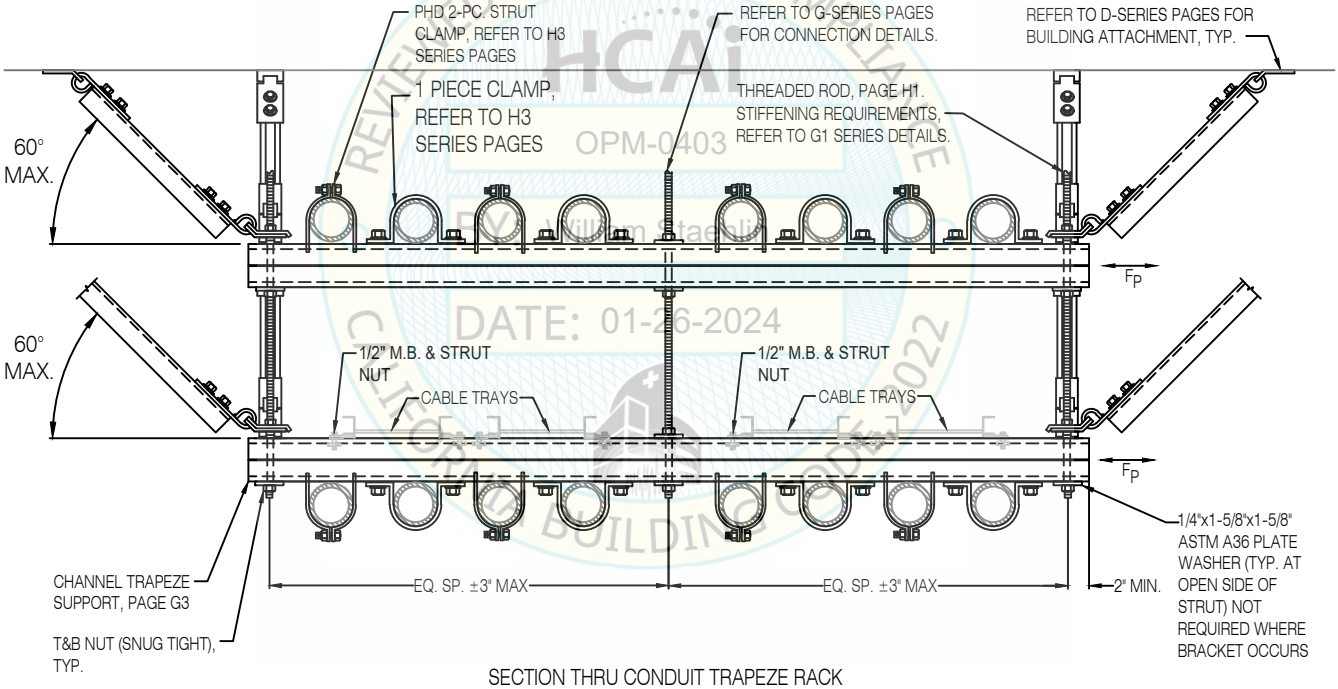

SECTION THRU CONDUIT TRAPEZE RACK

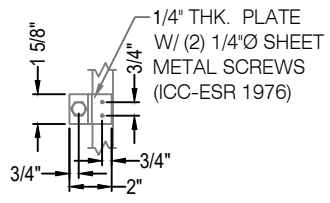

PLAN

3-ROD, 2-TIERED CONDUIT TRAPEZE RACK
4-WAY TRANSVERSE-LONGITUDINAL, RIGID BRACING

REGISTERED PROFESSIONAL ENGINEER MARCIN WASAZNIK S-6612 STRUCTURAL STATE OF CALIFORNIA

ISAT
A Division of Tomarco Contractor Specialties

International Seismic Application Technology
14848 Northam Street, La Mirada, CA 90638
877-999-4728 (Toll Free) 714-523-0845 (fax)
www.isatsb.com

Rev. 5
08/29/23

Page
B23.2

REVIEWED FOR CODE COMPLIANCE HCAi OPM-0403 Reviewed by William Staehlin DATE: 01-26-2024 CALIFORNIA BUILDING CODE 2022

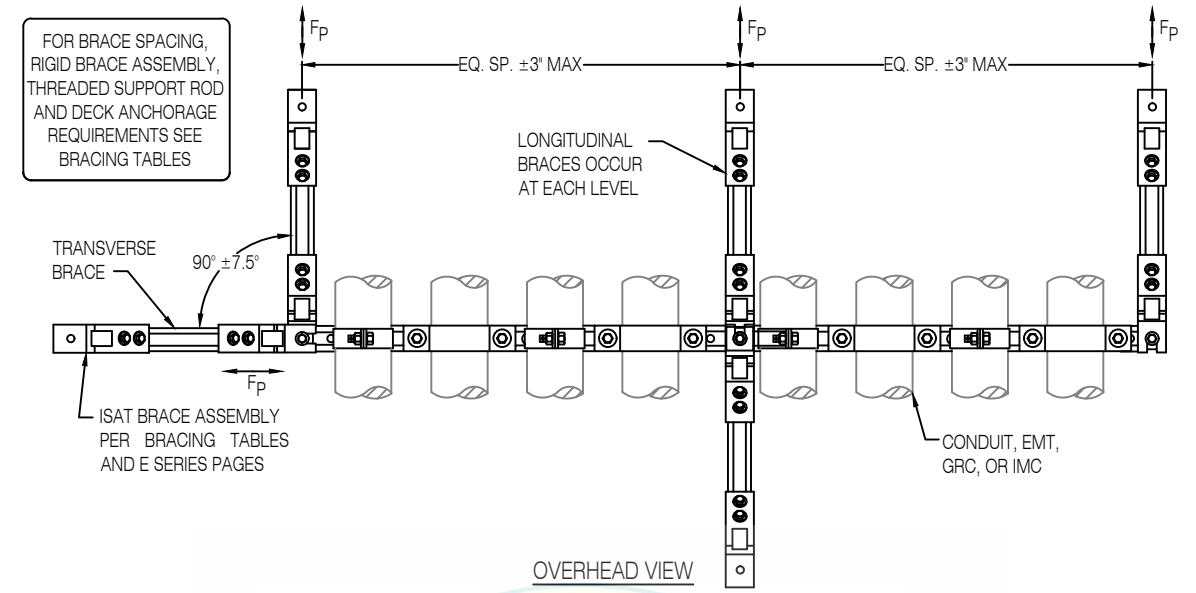

OVERHEAD VIEW

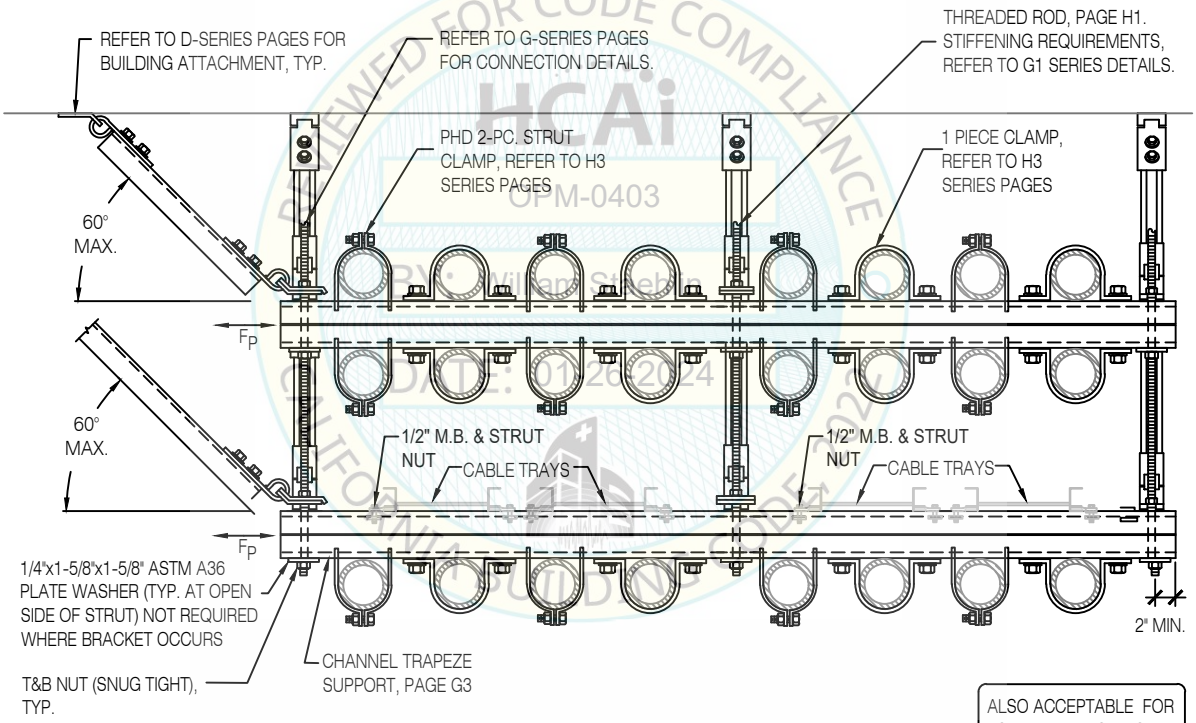

SECTION THRU CONDUIT TRAPEZE RACK

ALSO ACCEPTABLE FOR CABLE TRAY ON BOTH TIERS WITH OR WITHOUT CONDUIT

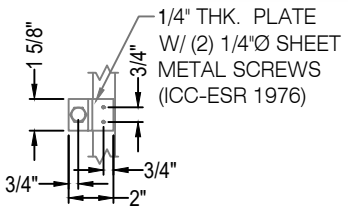

PLAN

3-ROD, 2-TIERED CONDUIT/CABLE TRAY TRAPEZE RACK
5-WAY TRANSVERSE-LONGITUDINAL, RIGID BRACING

REGISTERED PROFESSIONAL ENGINEER MARCIN WASAZNIK S-6612 STRUCTURAL STATE OF CALIFORNIA

ISAT
A Division of Tomarco Contractor Specialties

International Seismic Application Technology
14848 Northam Street, La Mirada, CA 90638
877-999-4728 (Toll Free) 714-523-0845 (fax)
www.isatsb.com

Rev. 6
08/29/23

Page
B23.3

REVIEWED FOR CODE COMPLIANCE HCAi OPM-0403 BY: William Staehlin DATE: 01/26/2024 CALIFORNIA BUILDING CODE

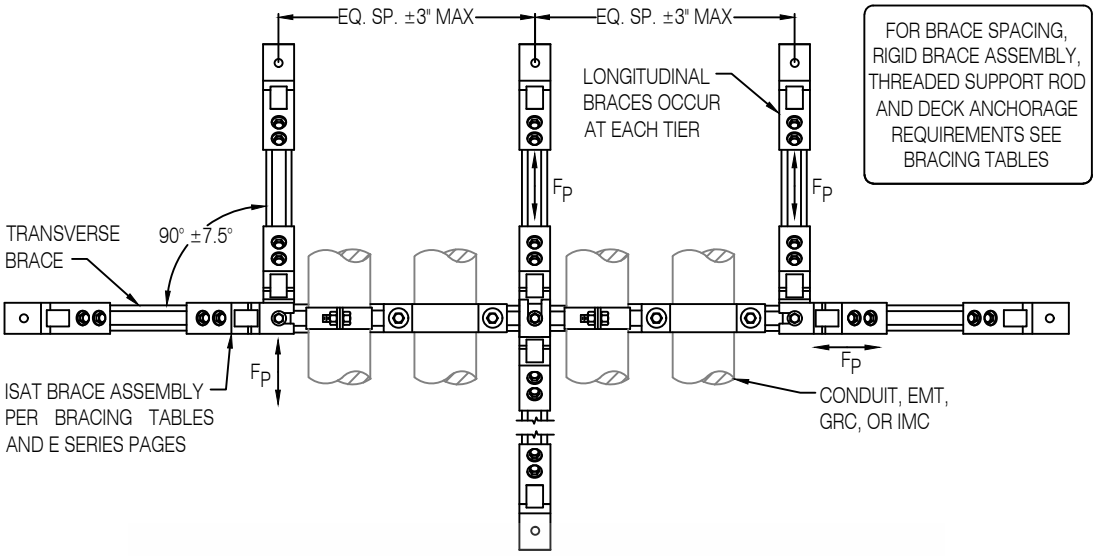

OVERHEAD VIEW

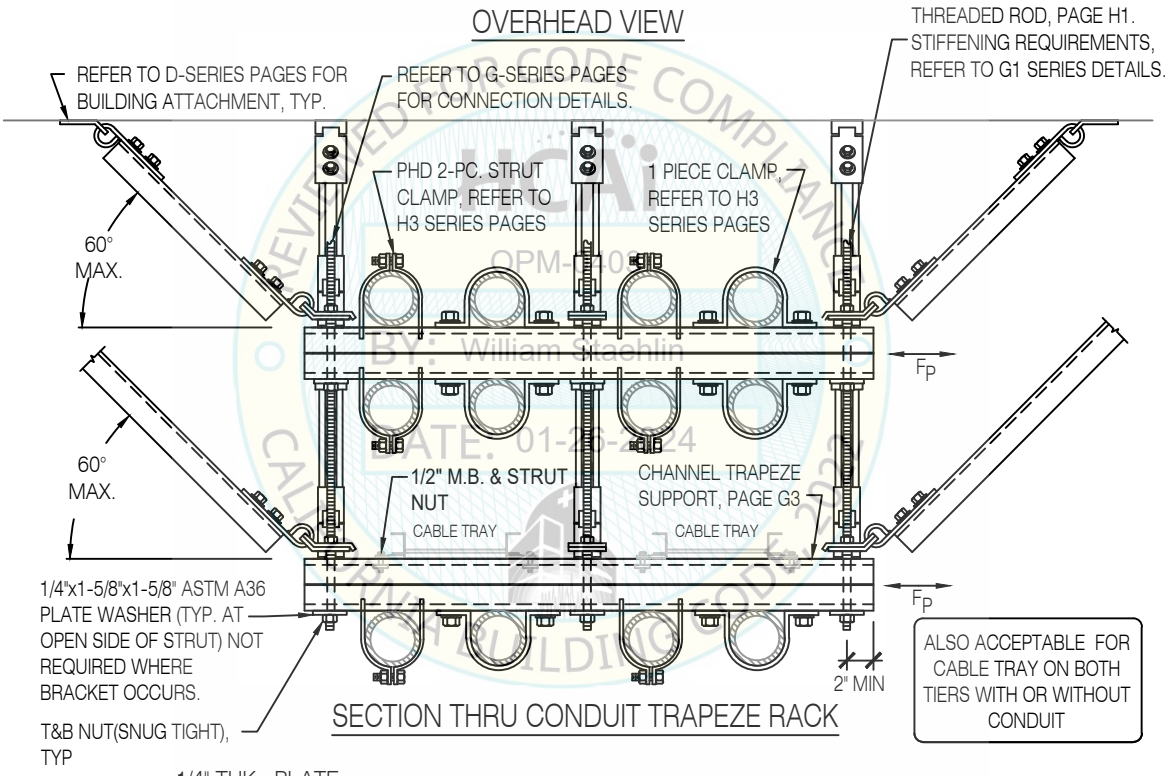

SECTION THRU CONDUIT TRAPEZE RACK

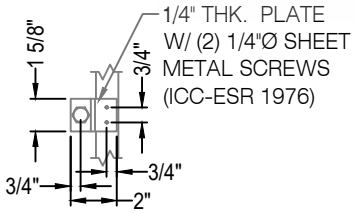

PLAN

3-ROD, 2-TIERED CONDUIT/CABLE TRAY TRAPEZE RACK
6-WAY TRANSVERSE-LONGITUDINAL, RIGID BRACING

REGISTERED PROFESSIONAL ENGINEER MARCIN WASAZNIK S-6612 STRUCTURAL STATE OF CALIFORNIA

ISAT
A Division of Tomarco Contractor Specialties

International Seismic Application Technology
14848 Northam Street, La Mirada, CA 90638
877-999-4728 (Toll Free) 714-523-0845 (fax)
www.isatsb.com

Rev. 5
08/29/23

Page
B23.4

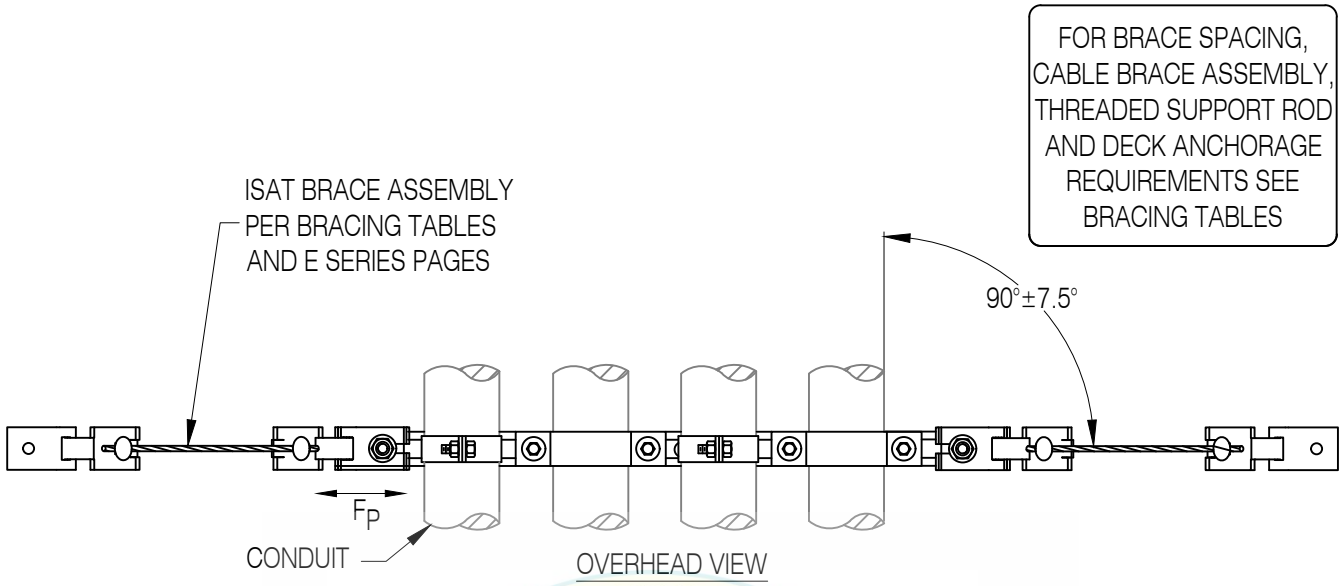

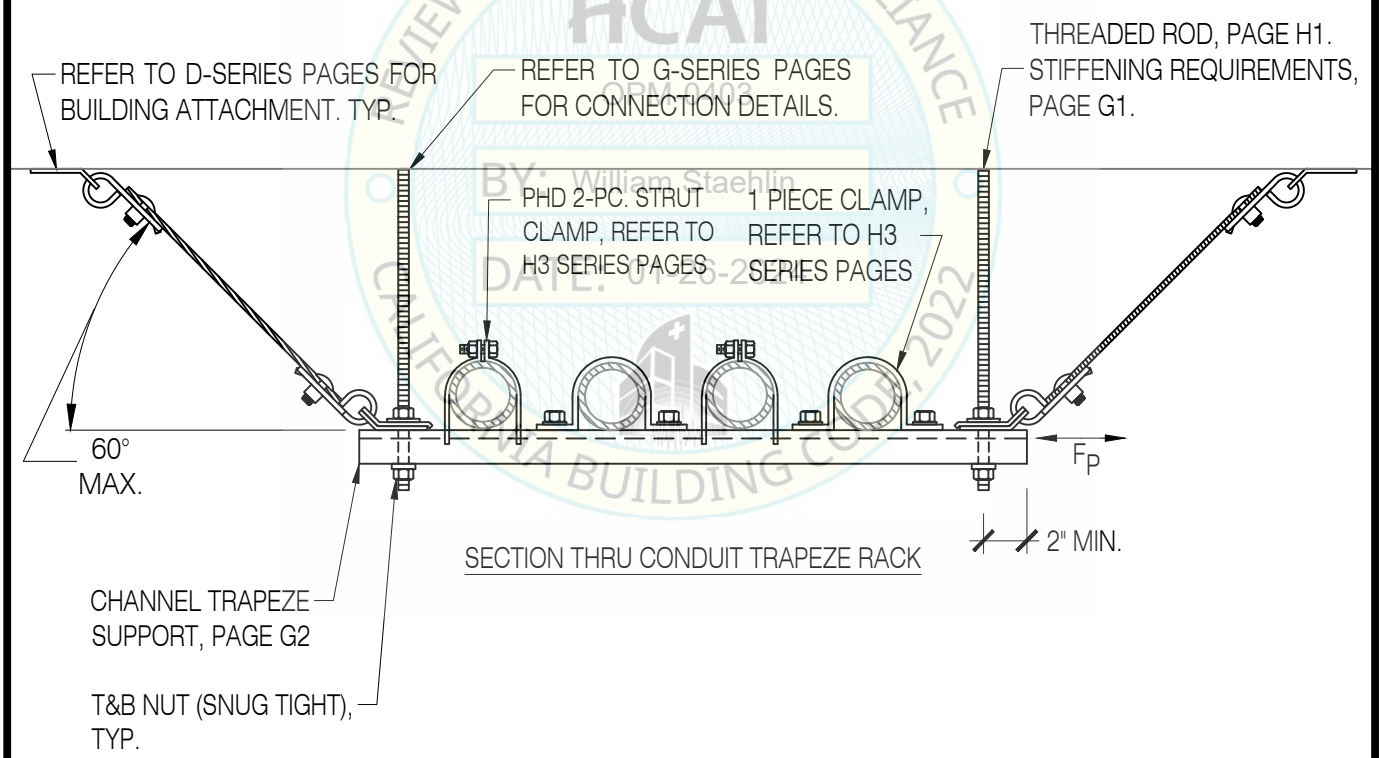

REVIEWED FOR CODE COMPLIANCE
HCAi
OPM-0403
BY: William Staehlin
DATE: 01-26-2024
CALIFORNIA BUILDING CODE 2022

CONDUIT TRAPEZE RACK 2-WAY TRANSVERSE, CABLE BRACING

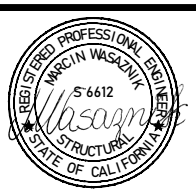

ISAT
A Division of Tomarco Contractor Specialties
International Seismic Application Technology
14848 Northam Street, La Mirada, CA 90638
877-999-4728 (Toll Free) 714-523-0845 (fax)
www.isatsb.com

Rev. 2
06/26/18

Page
B24.0

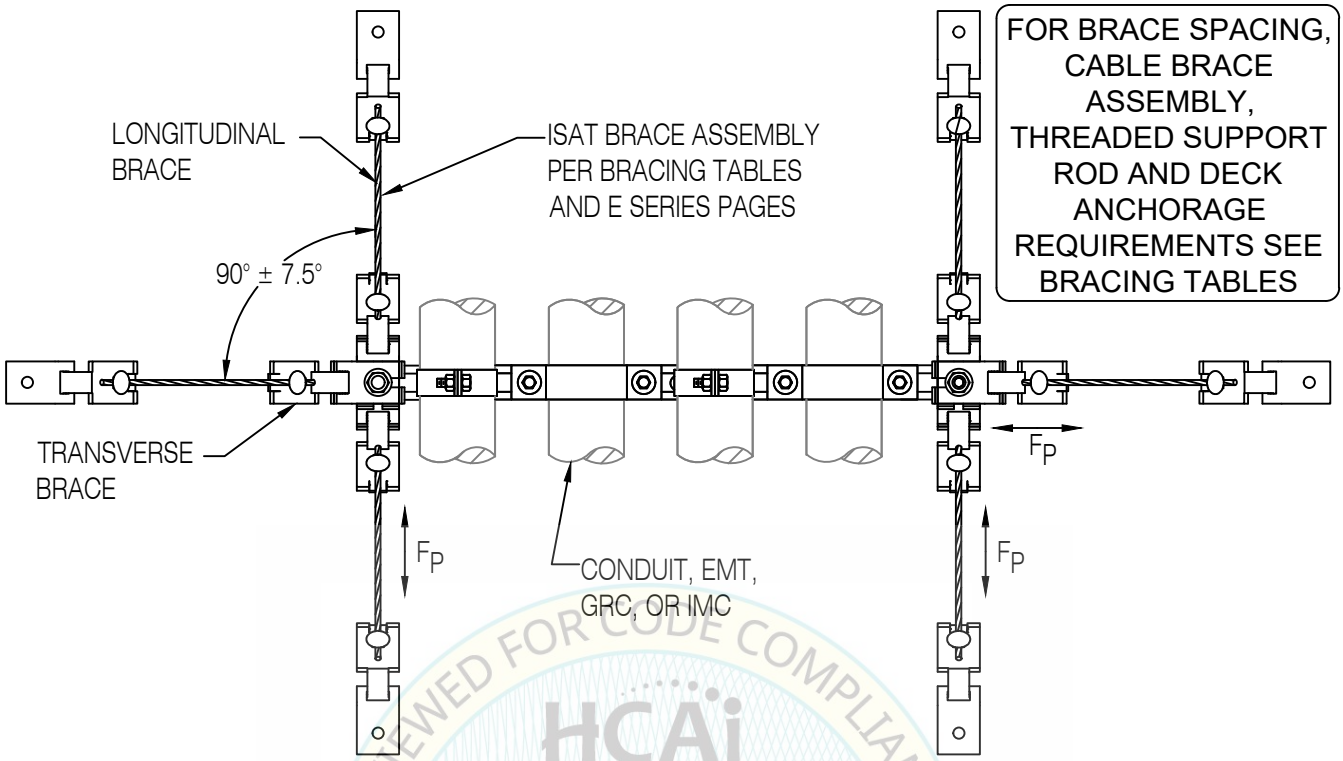

FOR BRACE SPACING, CABLE BRACE ASSEMBLY, THREADED SUPPORT ROD AND DECK ANCHORAGE REQUIREMENTS SEE BRACING TABLES

OVERHEAD VIEW

REVIEWED FOR CODE COMPLIANCE
HCAi
OPM-0403
By: William Staehlin
DATE: 01-26-2024
CALIFORNIA BUILDING CODE, 2022

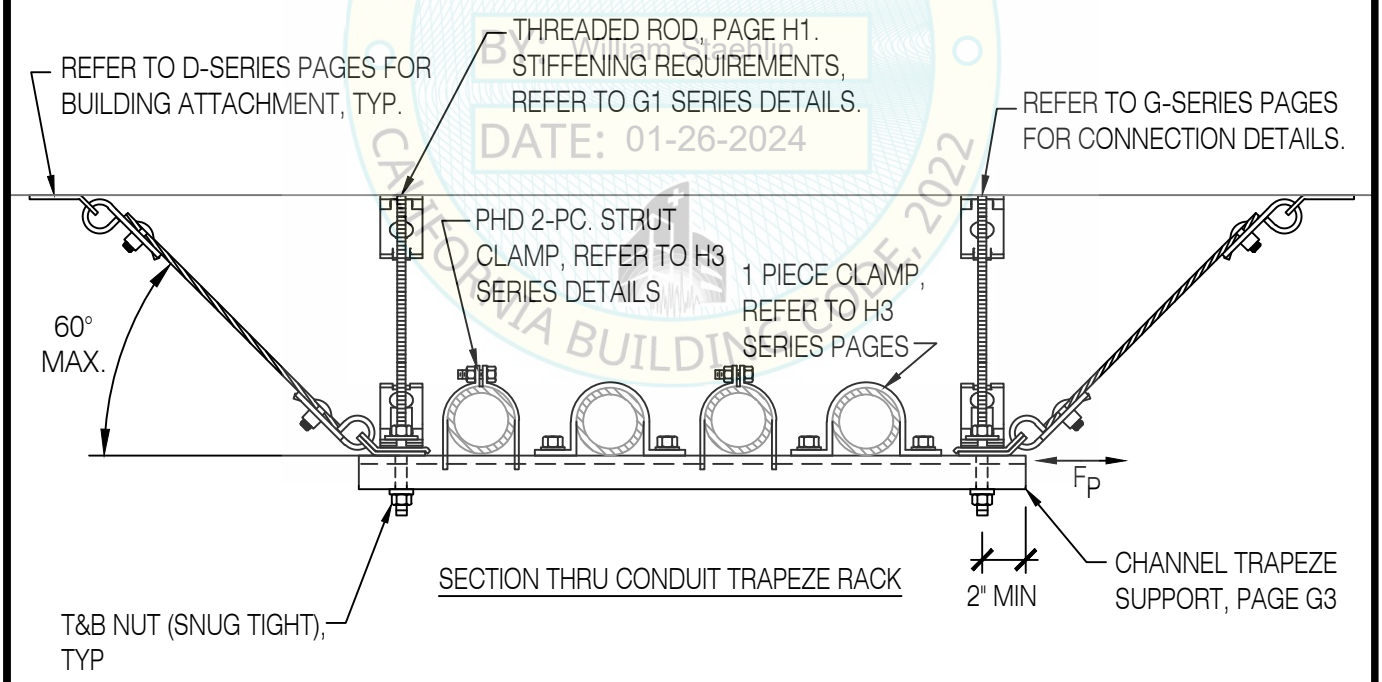

SECTION THRU CONDUIT TRAPEZE RACK

CONDUIT TRAPEZE RACK
6-WAY TRANSVERSE-LONGITUDINAL, CABLE BRACING

REGISTERED PROFESSIONAL ENGINEER MARCIN WASAZNIK S-6612 STRUCTURAL STATE OF CALIFORNIA

ISAT
A Division of Tomarco Contractor Specialties

International Seismic Application Technology
14848 Northam Street, La Mirada, CA 90638
877-999-4728 (Toll Free) 714-523-0845 (fax)
www.isatsb.com

Rev. 3
08/29/23

Page
B24.1

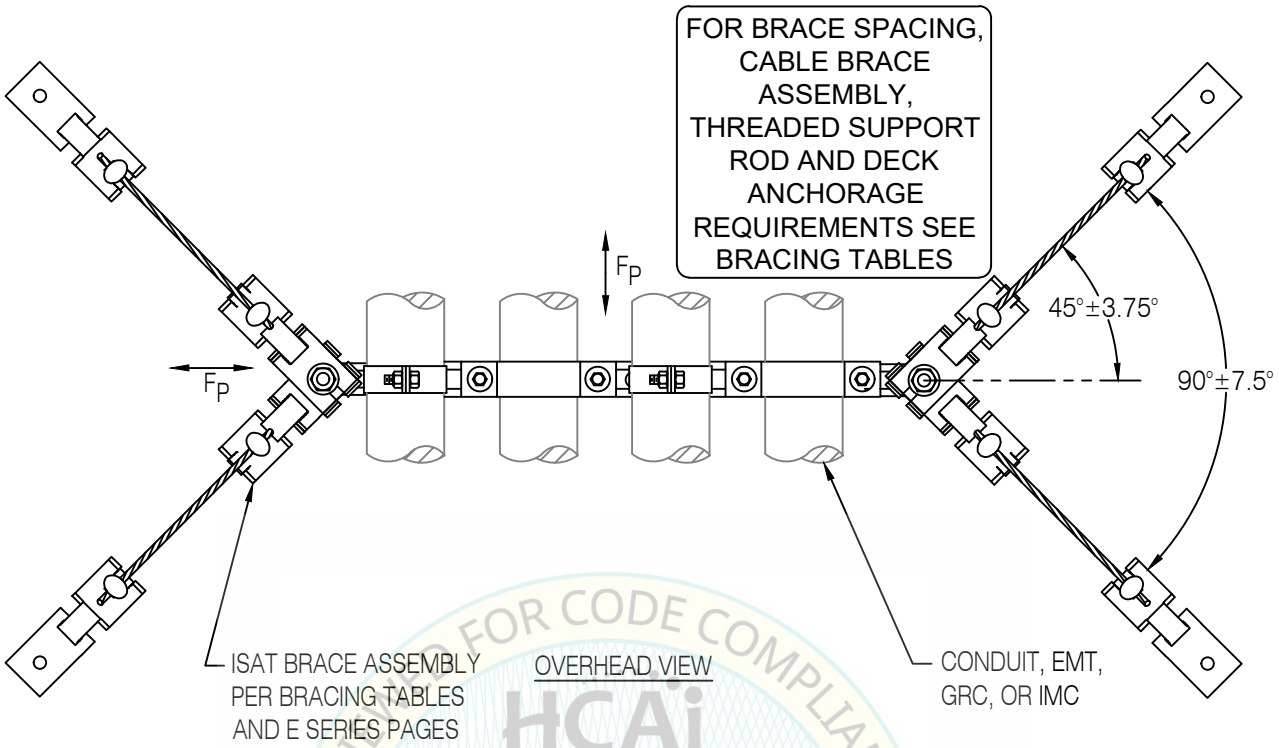

OVERHEAD VIEW

REVIEWED FOR CODE COMPLIANCE
HCAi
OPM-0403
BY: William Staehlin
DATE: 01-26-2024
CALIFORNIA BUILDING CODE, 2022

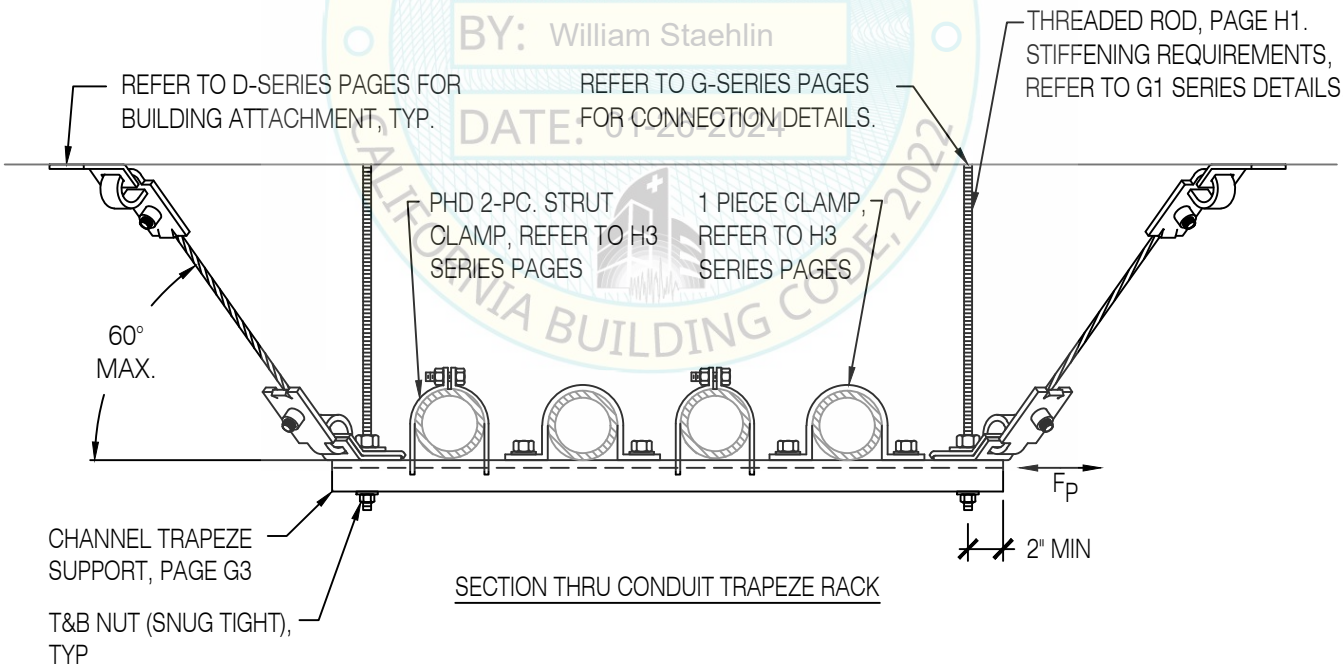

SECTION THRU CONDUIT TRAPEZE RACK

CONDUIT TRAPEZE RACK
4-WAY SPLAYED TRANSVERSE-LONGITUDINAL, CABLE BRACING

REGISTERED PROFESSIONAL ENGINEER MARCIN WASAZNIK S-6612 STRUCTURAL STATE OF CALIFORNIA

ISAT
A Division of Tomarco Contractor Specialties
International Seismic Application Technology
14848 Northam Street, La Mirada, CA 90638
877-999-4728 (Toll Free) 714-523-0845 (fax)
www.isatsb.com

Rev. 3
08/29/23

Page
B24.2

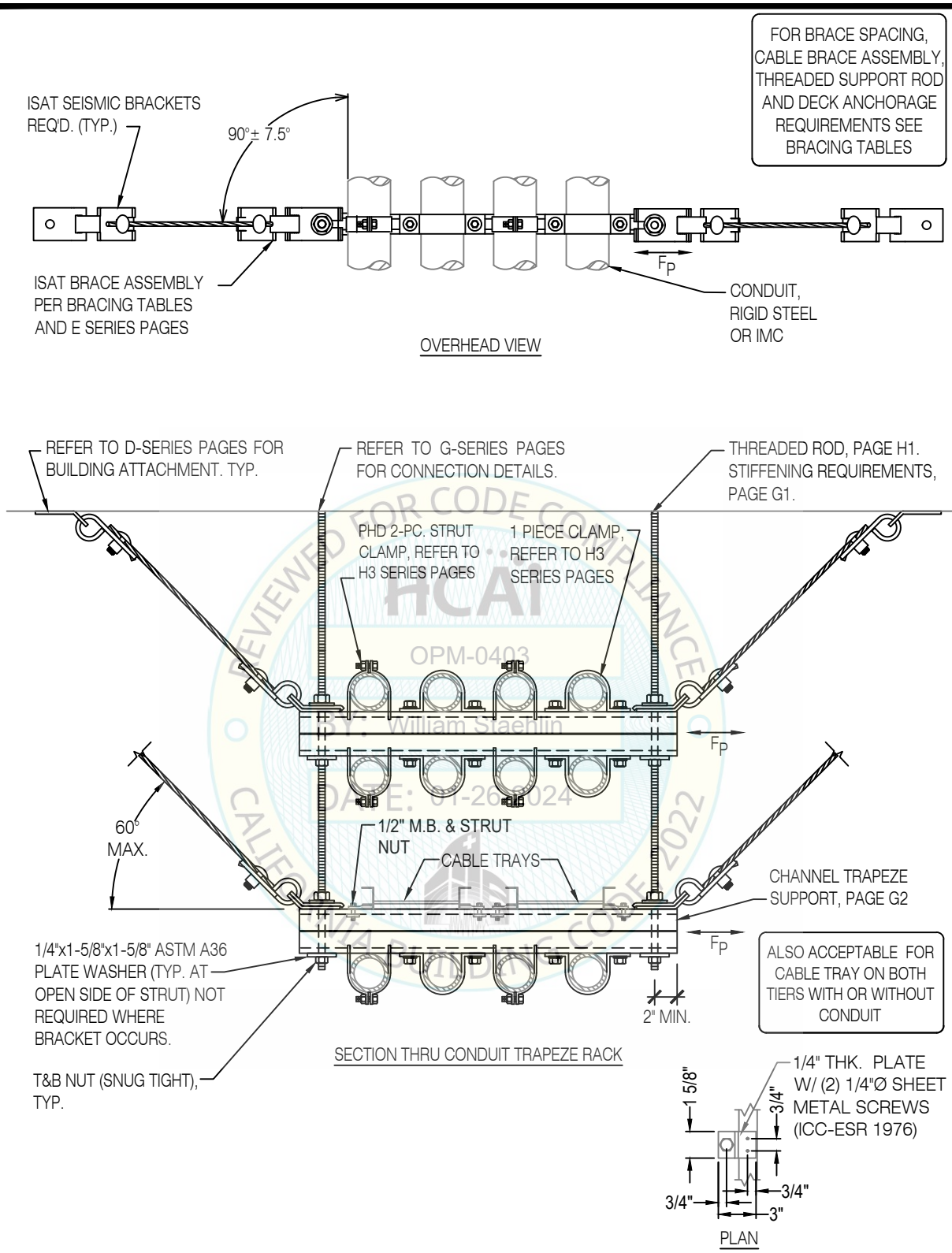

REVIEWED FOR CODE COMPLIANCE
HCAI
OPM-0403
BY: William Staehlin
DATE: 01-26-2024
CALIFORNIA BUILDING CODE 2022

2-TIERED CONDUIT/CABLE TRAY TRAPEZE RACK
2-WAY TRANSVERSE, CABLE BRACING

REGISTERED PROFESSIONAL ENGINEER MARCIN WASAZNIK S-6612 STRUCTURAL STATE OF CALIFORNIA

ISAT
A Division of Tomarco Contractor Specialties
International Seismic Application Technology
14848 Northam Street, La Mirada, CA 90638
877-999-4728 (Toll Free) 714-523-0845 (fax)
www.isatsb.com

Rev. 4
07/03/18

Page
B25.0

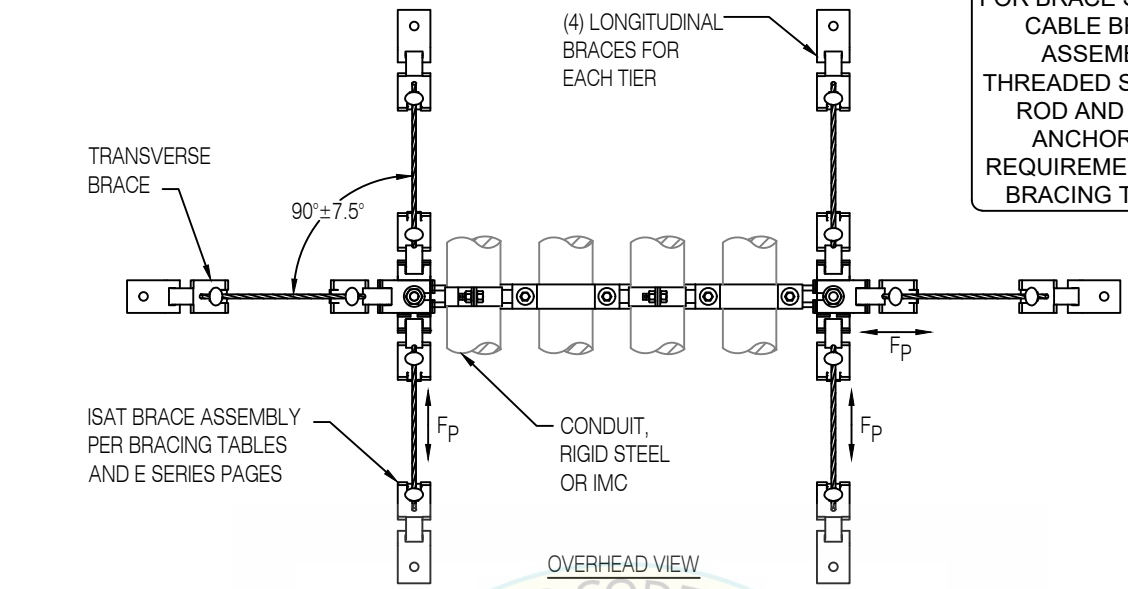

FOR BRACE SPACING, CABLE BRACE ASSEMBLY, THREADED SUPPORT ROD AND DECK ANCHORAGE REQUIREMENTS SEE BRACING TABLES

OVERHEAD VIEW

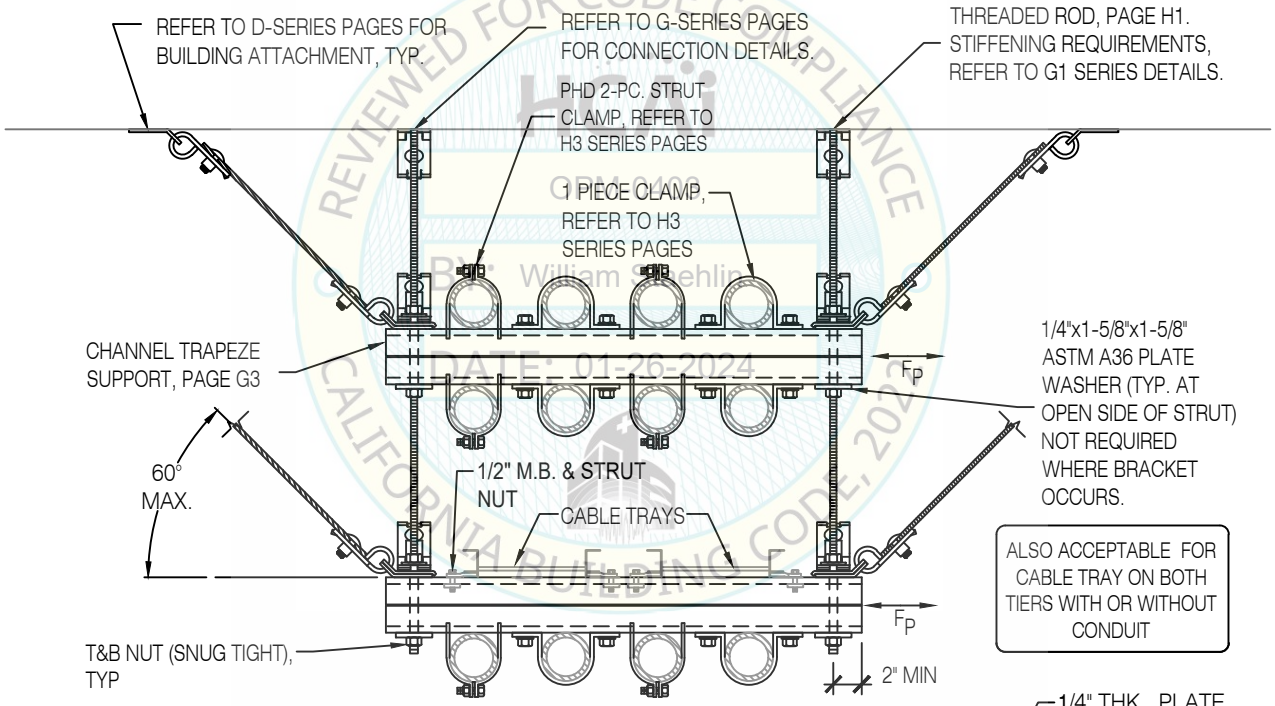

ALSO ACCEPTABLE FOR CABLE TRAY ON BOTH TIERS WITH OR WITHOUT CONDUIT

SECTION THRU CONDUIT TRAPEZE RACK

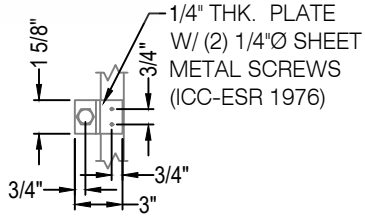

PLAN

REVIEWED FOR CODE COMPLIANCE
OPM-0403
By: William Staehlin
DATE: 01-26-2024
CALIFORNIA BUILDING CODE, 2022

2-TIERED CONDUIT/CABLE TRAY TRAPEZE RACK
6-WAY TRANSVERSE-LONGITUDINAL, CABLE BRACING

REGISTERED PROFESSIONAL ENGINEER MARCIN WASAZNIK S-6612 STRUCTURAL STATE OF CALIFORNIA

ISAT
A Division of Tomarco Contractor Specialties
International Seismic Application Technology
14848 Northam Street, La Mirada, CA 90638
877-999-4728 (Toll Free) 714-523-0845 (fax)
www.isatsb.com

Rev. 6
08/29/23

Page
B25.1

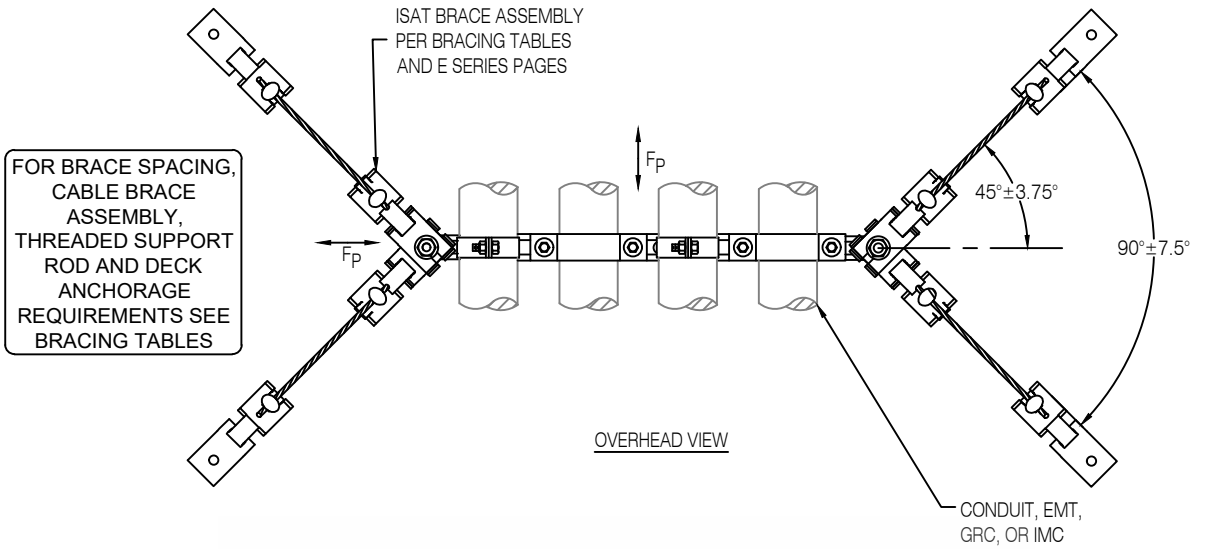

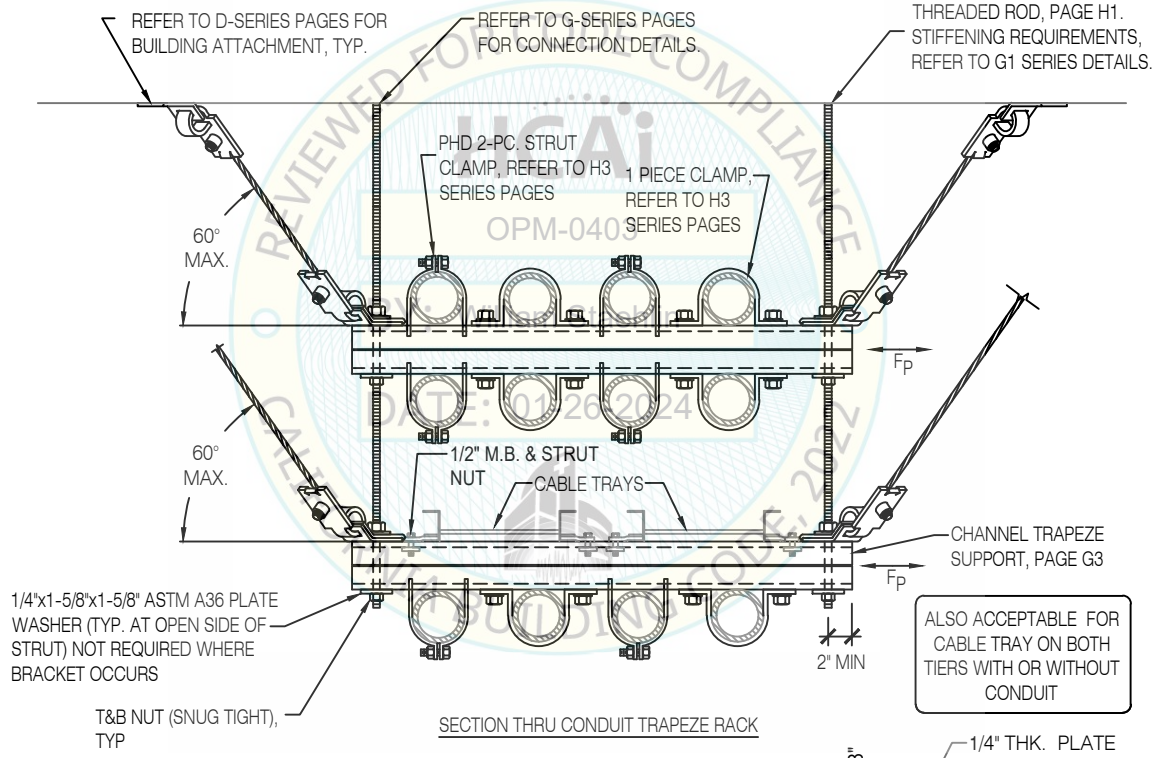

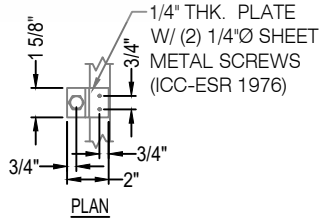

REVIEWED FOR CODE COMPLIANCE
OPM-0403
DATE: 01/26/2024
CALIFORNIA BUILDING CODE, 2022

2-TIERED CONDUIT/CABLE TRAY TRAPEZE RACK
4-WAY SPLAYED TRANSVERSE-LONGITUDINAL, CABLE BRACING

REGISTERED PROFESSIONAL ENGINEER MARCIN WASAZNIK S 6612 STRUCTURAL STATE OF CALIFORNIA

ISAT
A Division of Tomarco Contractor Specialties
International Seismic Application Technology
14848 Northam Street, La Mirada, CA 90638
877-999-4728 (Toll Free) 714-523-0845 (fax)
www.isatsb.com

Rev. 5
08/30/23

Page
B25.2

FOR BRACE SPACING, CABLE BRACE ASSEMBLY, THREADED SUPPORT ROD AND DECK ANCHORAGE REQUIREMENTS SEE BRACING TABLES

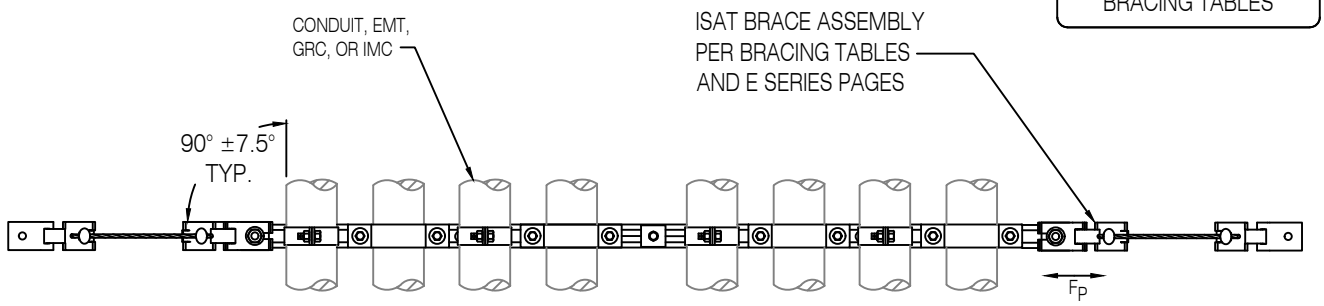

OVERHEAD VIEW

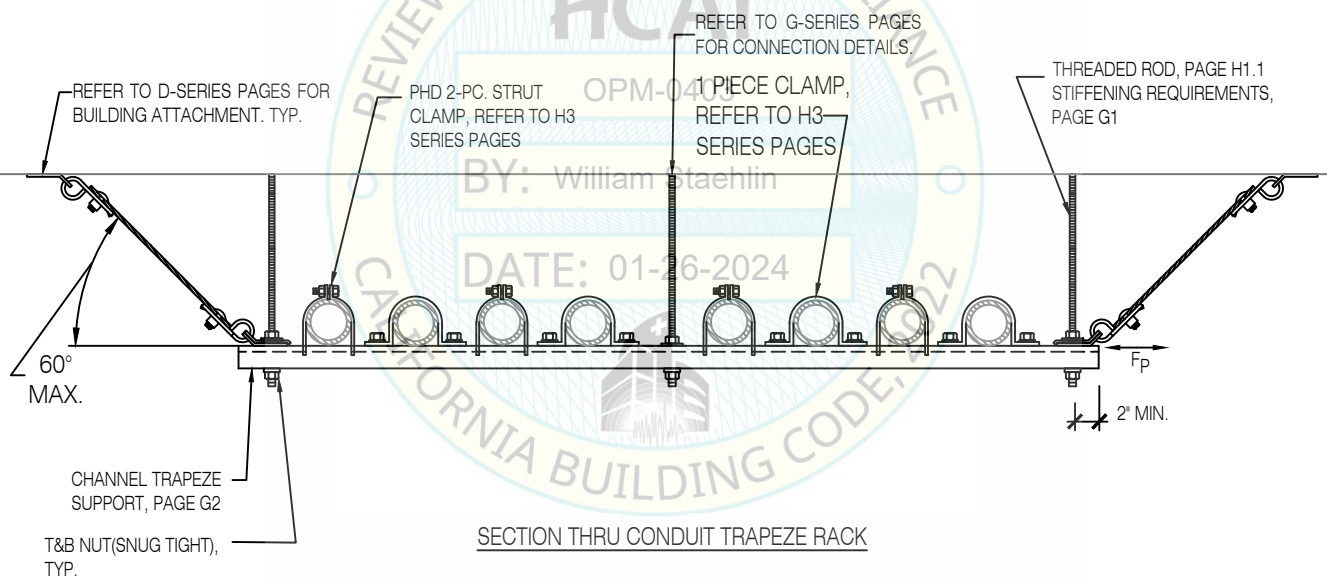

SECTION THRU CONDUIT TRAPEZE RACK

REVIEWED FOR CODE COMPLIANCE
HCAi
OPM-0403
BY: William Staehlin
DATE: 01-26-2024
CALIFORNIA BUILDING CODE, 2022

3-ROD, CONDUIT TRAPEZE RACK
2-WAY TRANSVERSE, CABLE BRACING

ISAT
A Division of Tomarco Contractor Specialties
International Seismic Application Technology
14848 Northam Street, La Mirada, CA 90638
877-999-4728 (Toll Free) 714-523-0845 (fax)
www.isatsb.com

Rev. 2
06/26/18

Page
B26.0

FOR BRACE SPACING, CABLE BRACE ASSEMBLY, THREADED SUPPORT ROD AND DECK ANCHORAGE REQUIREMENTS SEE BRACING TABLES

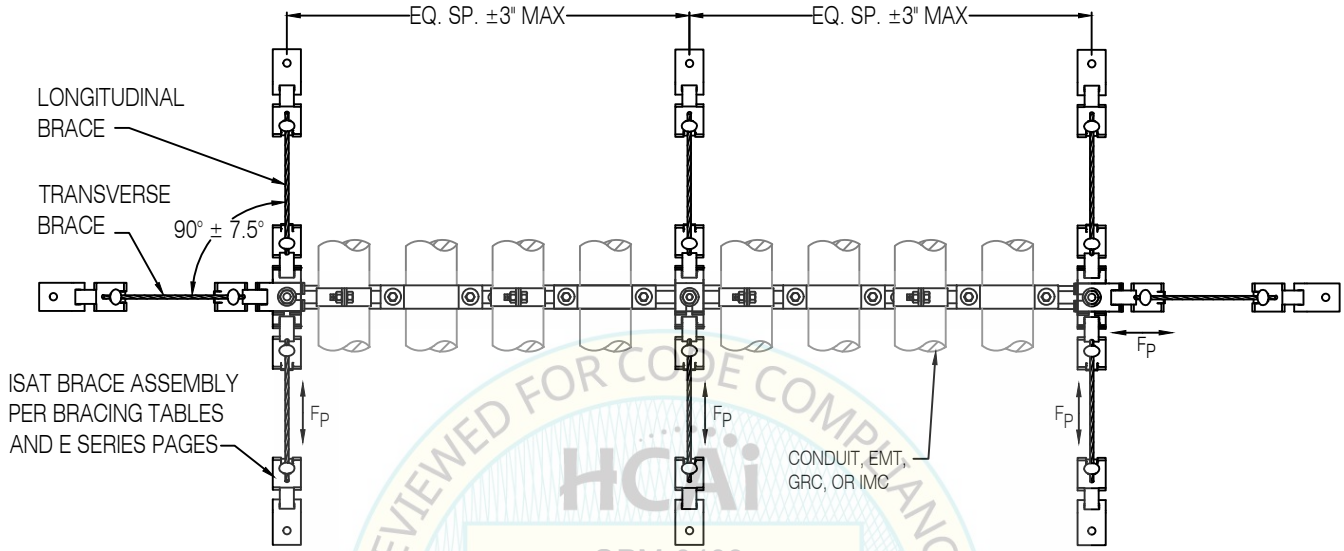

OVERHEAD VIEW

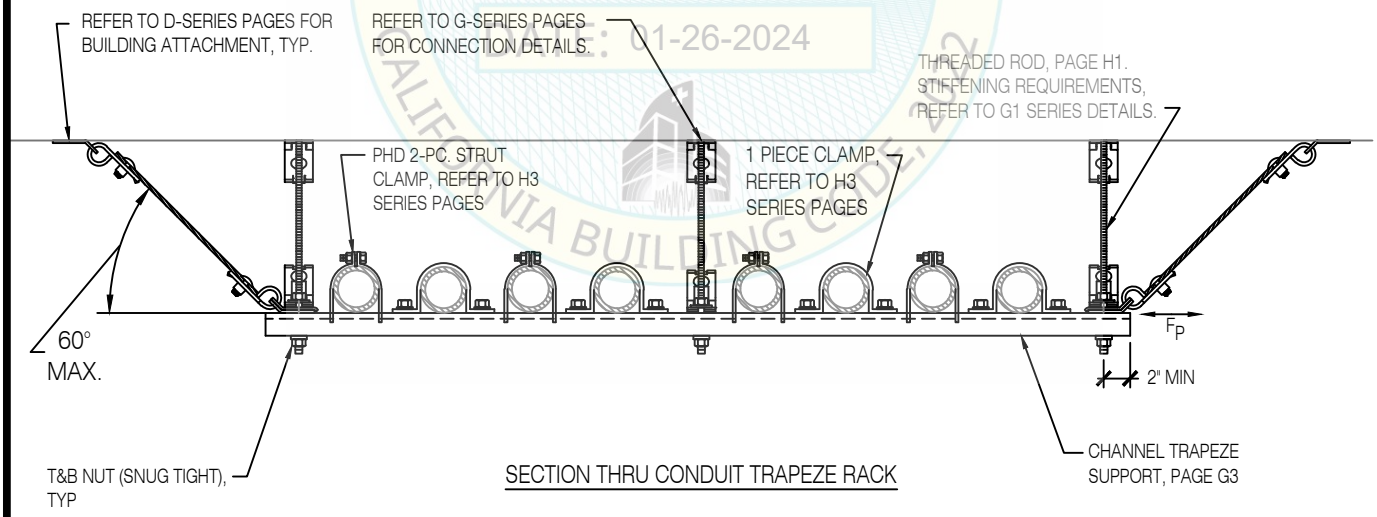

SECTION THRU CONDUIT TRAPEZE RACK

REVIEWED FOR CODE COMPLIANCE
HCAi
OPM-0403
BY: William Staehlin
DATE: 01-26-2024
CALIFORNIA BUILDING CODES

3-ROD CONDUIT TRAPEZE RACK
8-WAY TRANSVERSE-LONGITUDINAL, CABLE BRACING

REGISTERED PROFESSIONAL ENGINEER MARCIN WASAZNIK S-6612 STRUCTURAL STATE OF CALIFORNIA

ISAT
A Division of Tomarco Contractor Specialties
International Seismic Application Technology
14848 Northam Street, La Mirada, CA 90638
877-999-4728 (Toll Free) 714-523-0845 (fax)
www.isatsb.com

Rev. 3
08/30/23

Page
B26.1

FOR BRACE SPACING, CABLE BRACE ASSEMBLY, THREADED SUPPORT ROD AND DECK ANCHORAGE REQUIREMENTS SEE BRACING TABLES

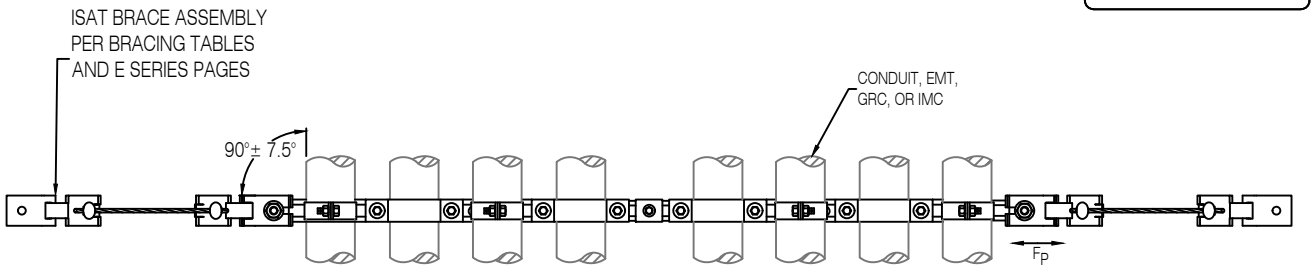

OVERHEAD VIEW

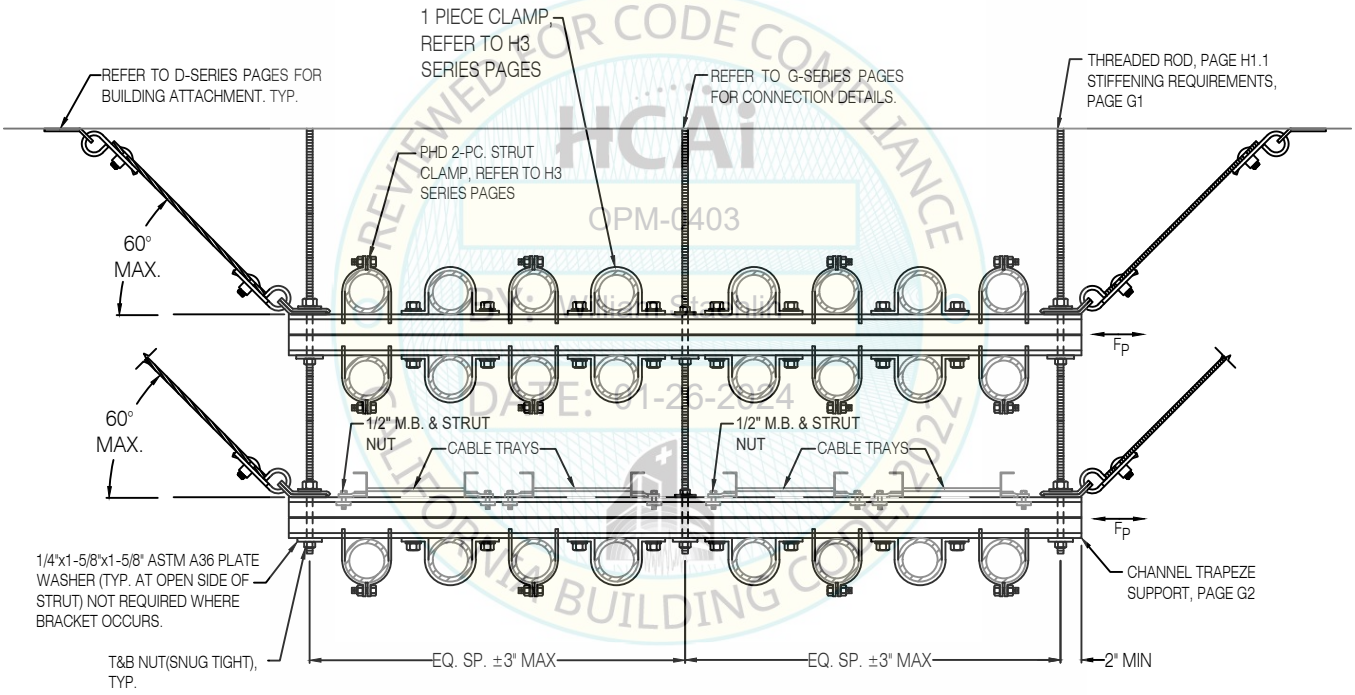

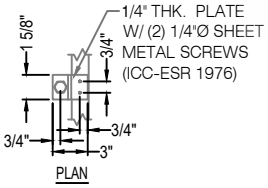

PLAN

SECTION THRU CONDUIT TRAPEZE RACK

ALSO ACCEPTABLE FOR CABLE TRAY ON BOTH TIERS WITH OR WITHOUT CONDUIT

REVIEWED FOR CODE COMPLIANCE HCAi OPM-0403 BY: William Staehlin DATE: 01-26-2024 LA COUNTY BUILDING CODE 2020

3-ROD, 2-TIERED CONDUIT/CABLE TRAY TRAPEZE RACK
2-WAY TRANSVERSE, CABLE BRACING

REGISTERED PROFESSIONAL ENGINEER MARCIN WASAZNIK S-6612 STRUCTURAL STATE OF CALIFORNIA

ISAT
A Division of Tomarco Contractor Specialties
International Seismic Application Technology
14848 Northam Street, La Mirada, CA 90638
877-999-4728 (Toll Free) 714-523-0845 (fax)
www.isatsb.com

Rev. 4
07/03/18

Page
B27.0

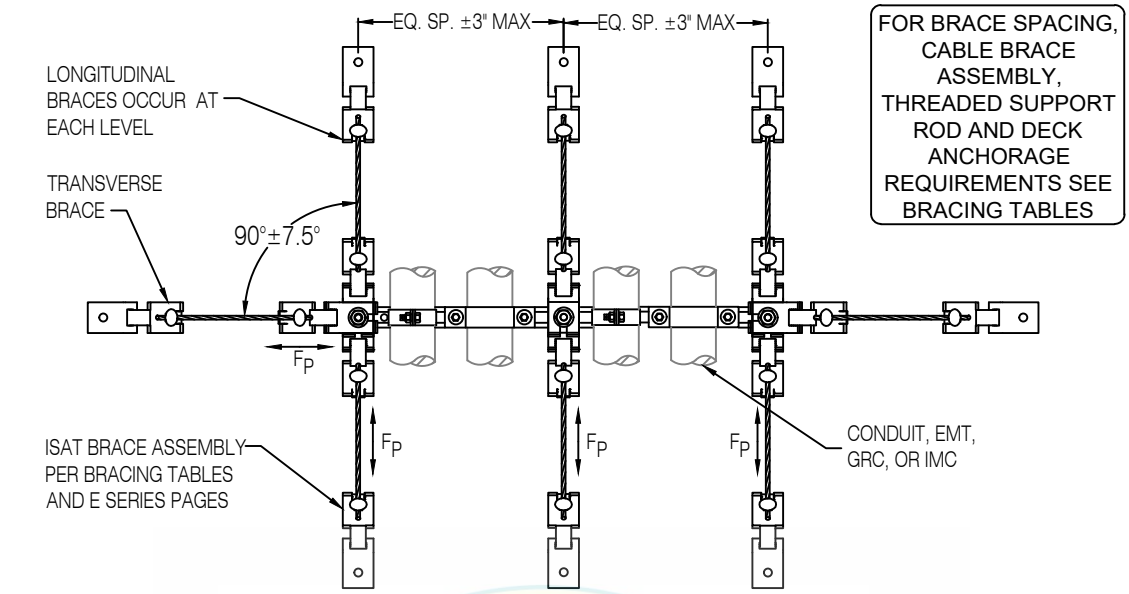

FOR BRACE SPACING, CABLE BRACE ASSEMBLY, THREADED SUPPORT ROD AND DECK ANCHORAGE REQUIREMENTS SEE BRACING TABLES

OVERHEAD VIEW

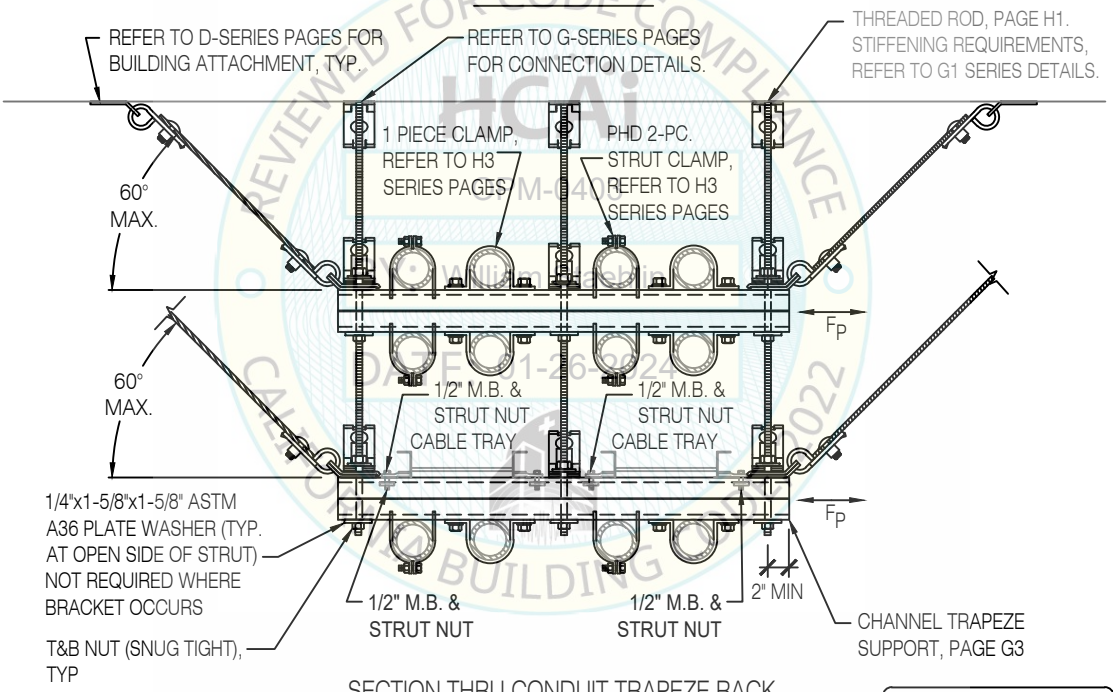

SECTION THRU CONDUIT TRAPEZE RACK

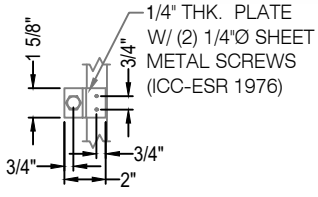

PLAN

ALSO ACCEPTABLE FOR CABLE TRAY ON BOTH TIERS WITH OR WITHOUT CONDUIT

3-ROD, 2-TIERED CONDUIT/CABLE TRAY TRAPEZE RACK
8-WAY TRANSVERSE-LONGITUDINAL, CABLE BRACING

REGISTERED PROFESSIONAL ENGINEER MARCIN WASAZNIK S-6612 STRUCTURAL STATE OF CALIFORNIA

ISAT
A Division of Tomarco Contractor Specialties

International Seismic Application Technology
14848 Northam Street, La Mirada, CA 90638
877-999-4728 (Toll Free) 714-523-0845 (fax)
www.isatsb.com

Rev. 6
08/30/23

Page
B27.1

FOR BRACE SPACING, RIGID BRACE ASSEMBLY, THREADED SUPPORT ROD AND DECK ANCHORAGE REQUIREMENTS SEE BRACING TABLES

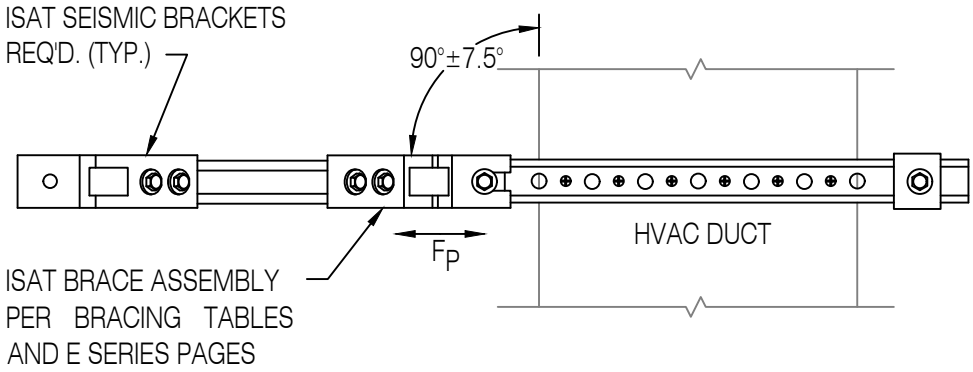

OVERHEAD VIEW

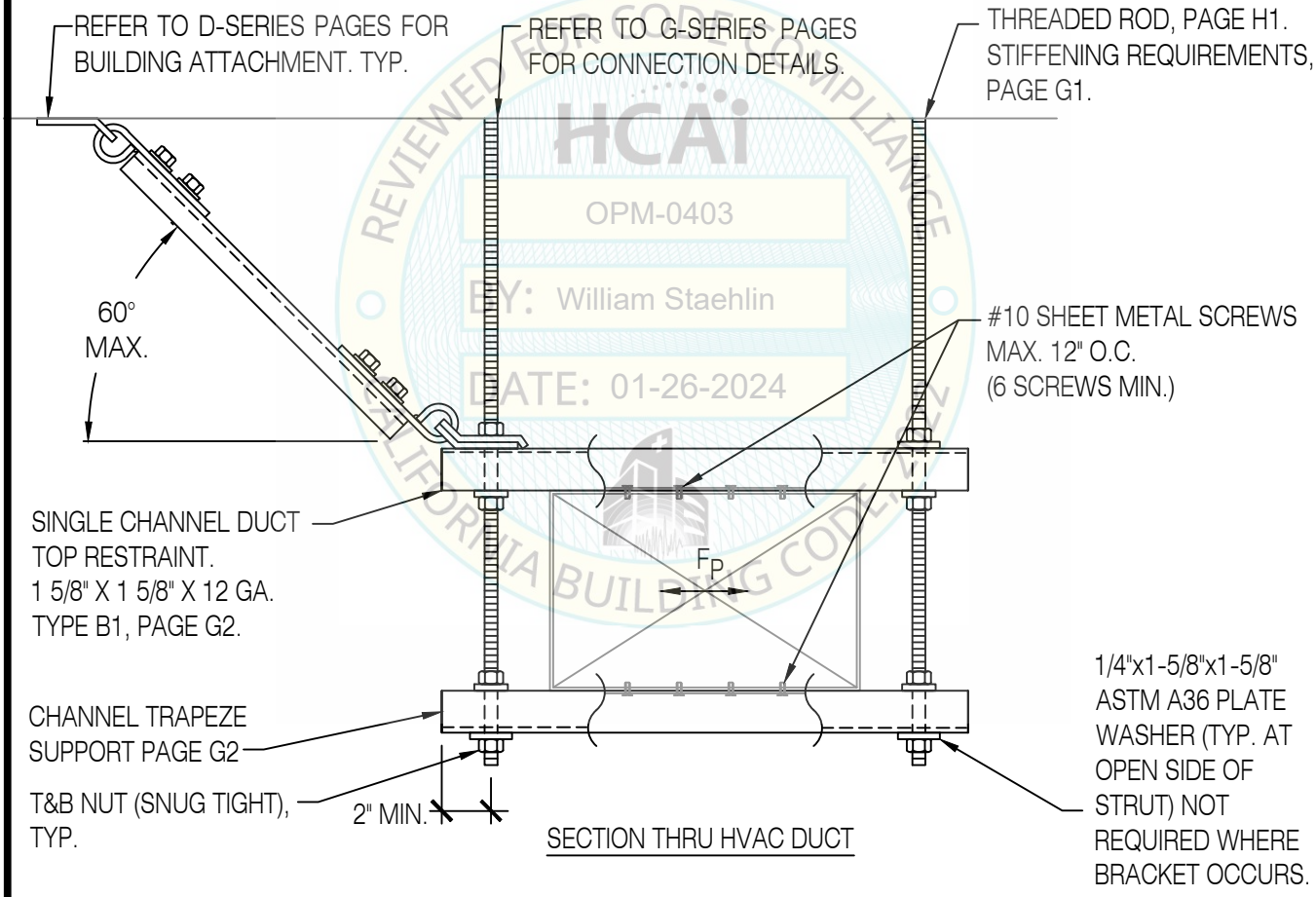

SECTION THRU HVAC DUCT

REVIEWED FOR CODE COMPLIANCE
HCAi
OPM-0403
BY: William Staehlin
DATE: 01-26-2024
CALIFORNIA BUILDING CODE

HVAC DUCT TRAPEZE SUPPORTED 1-WAY TRANSVERSE, RIGID BRACING

REGISTERED PROFESSIONAL ENGINEER MARCIN WASAZNIK S-6612 STRUCTURAL STATE OF CALIFORNIA

ISAT
A Division of Tomarco Contractor Specialties
International Seismic Application Technology
14848 Northam Street, La Mirada, CA 90638
877-999-4728 (Toll Free) 714-523-0845 (fax)
www.isatsb.com

Rev. 4
06/26/18

Page
B30.0

FOR BRACE SPACING, RIGID BRACE ASSEMBLY, THREADED SUPPORT ROD AND DECK ANCHORAGE REQUIREMENTS SEE BRACING TABLES

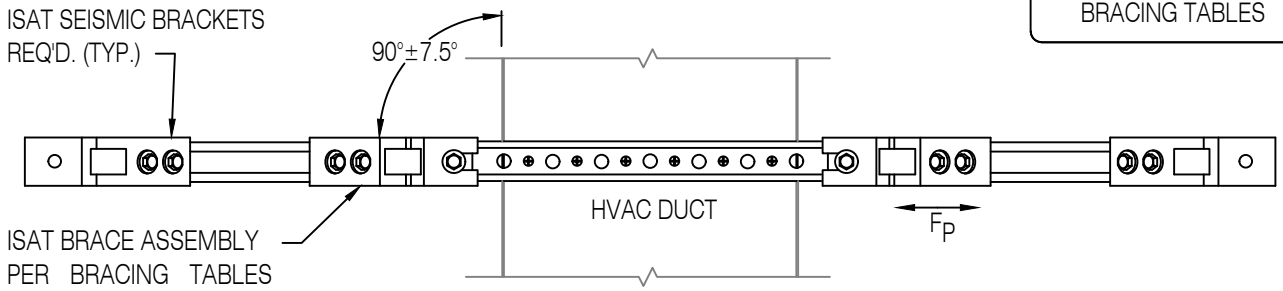

OVERHEAD VIEW

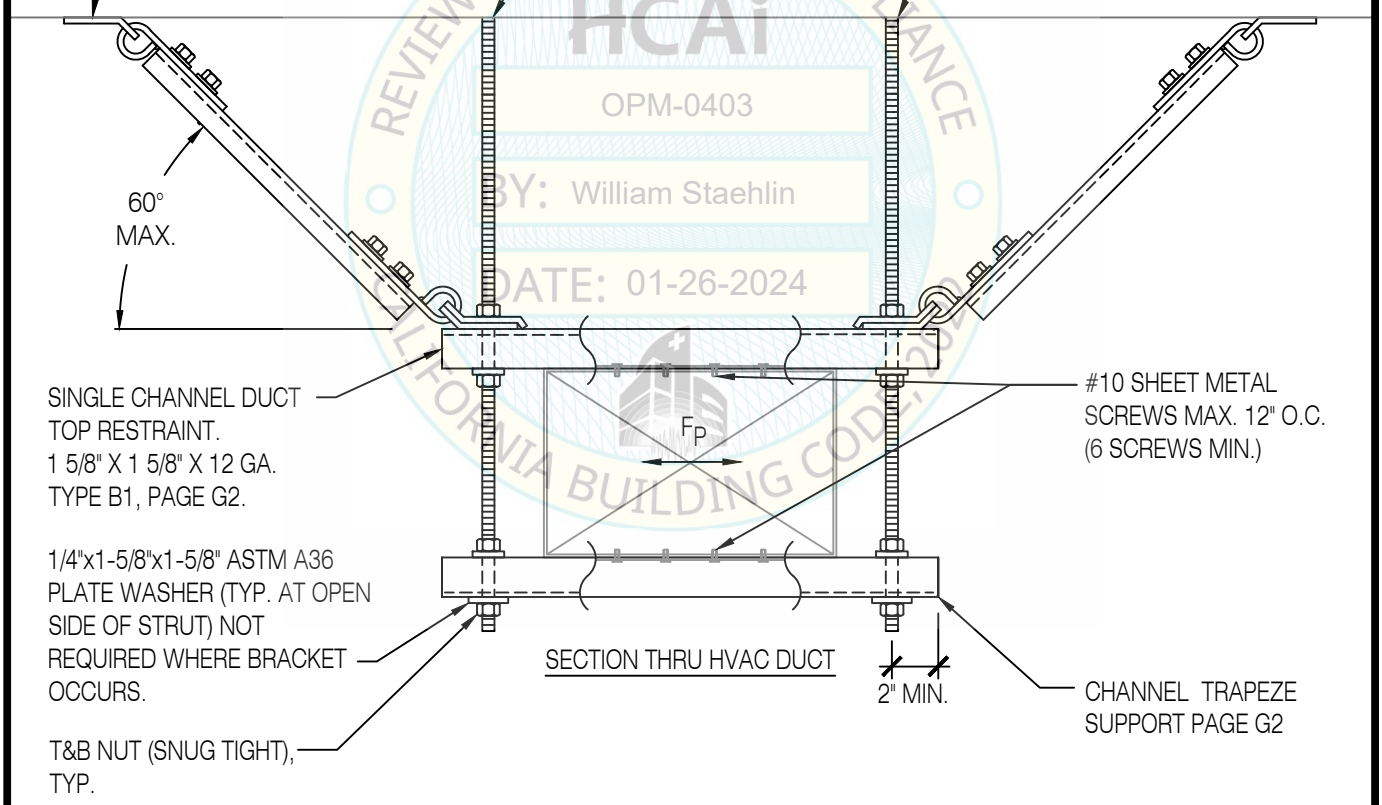

SECTION THRU HVAC DUCT

REVIEWED FOR CODE COMPLIANCE
HCAi
OPM-0403
BY: William Staehlin
DATE: 01-26-2024
CALIFORNIA BUILDING CODE, 2022

HVAC DUCT TRAPEZE SUPOPRTED 2-WAY TRANSVERSE, RIGID BRACING

REGISTERED PROFESSIONAL ENGINEER MARCIN WASAZNIK S-6612 STRUCTURAL STATE OF CALIFORNIA

ISAT
A Division of Tomarco Contractor Specialties
International Seismic Application Technology
14848 Northam Street, La Mirada, CA 90638
877-999-4728 (Toll Free) 714-523-0845 (fax)
www.isatsb.com

Rev. 4
06/26/18

Page
B30.1

FOR BRACE SPACING, RIGID BRACE ASSEMBLY, THREADED SUPPORT ROD AND DECK ANCHORAGE REQUIREMENTS SEE BRACING TABLES

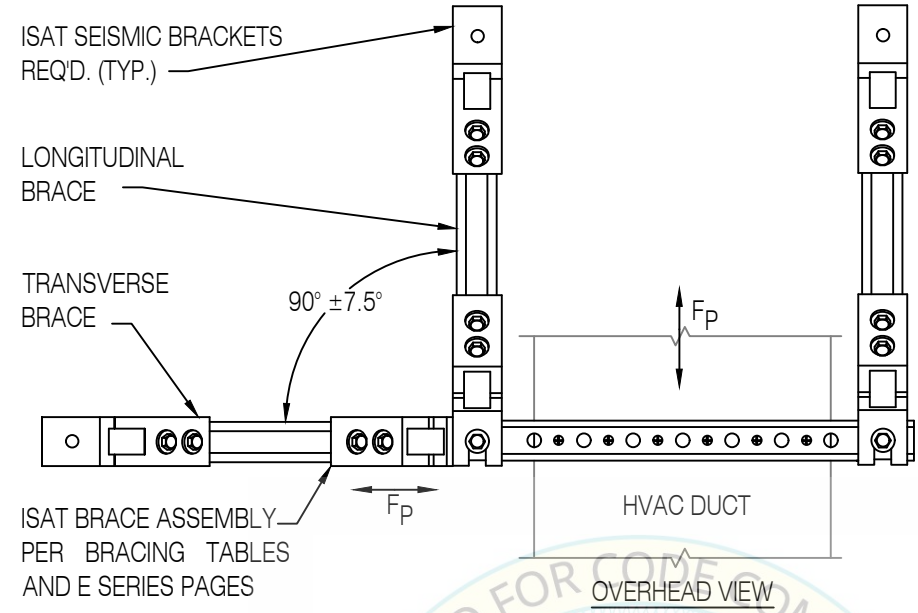

OVERHEAD VIEW

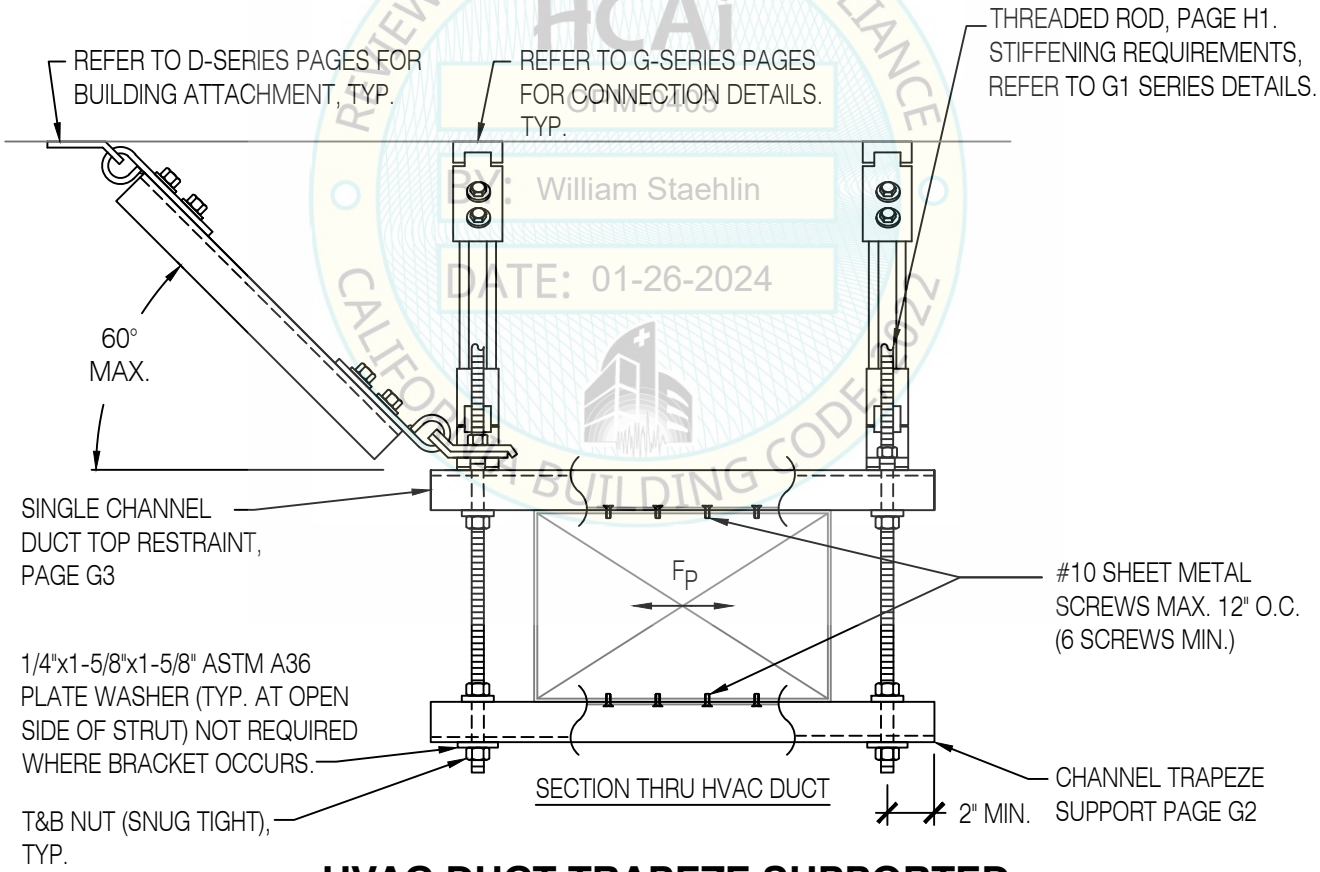

SECTION THRU HVAC DUCT

REVIEWED FOR CODE COMPLIANCE
HCAi
OPM-0403
BY: William Staehlin
DATE: 01-26-2024
CALIFORNIA BUILDING CODE 2022

HVAC DUCT TRAPEZE SUPPORTED
3-WAY TRANSVERSE-LONGITUDINAL, RIGID BRACING

REGISTERED PROFESSIONAL ENGINEER
MARCIN WASAZNIK
S 6612
STRUCTURAL
STATE OF CALIFORNIA

ISAT
A Division of Tomarco Contractor Specialties

International Seismic Application Technology
14848 Northam Street, La Mirada, CA 90638
877-999-4728 (Toll Free) 714-523-0845 (fax)
www.isatsb.com

Rev. 6
08/28/23

Page
B30.2

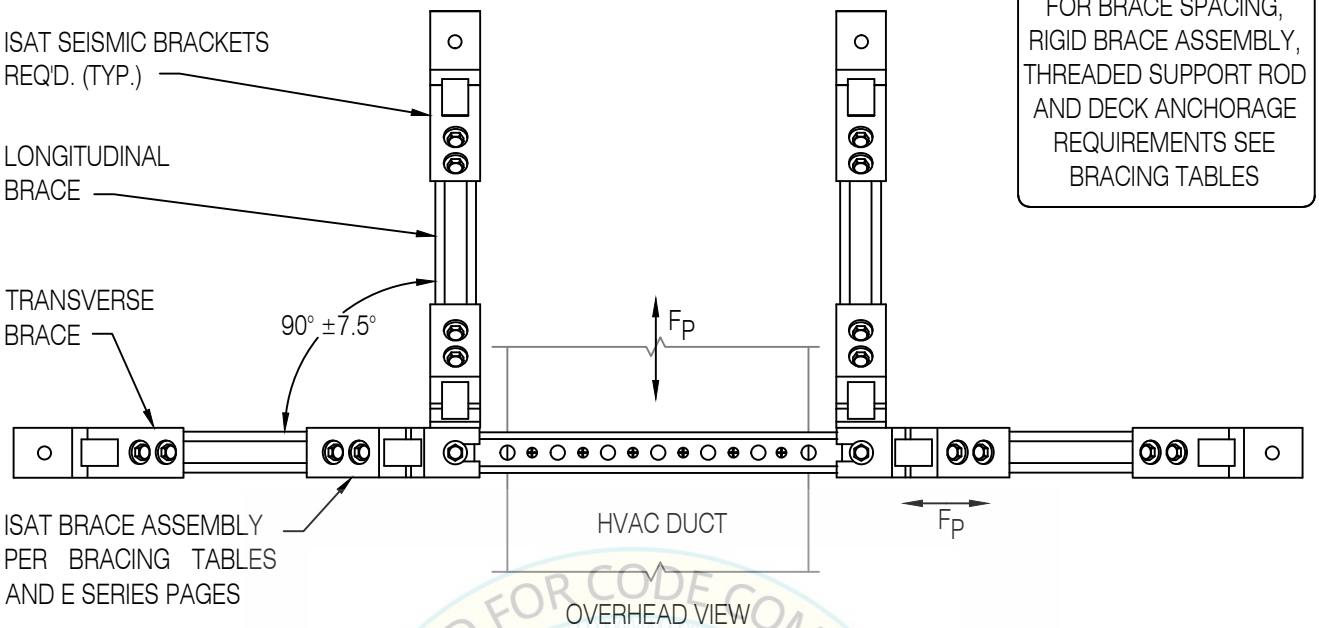

FOR BRACE SPACING, RIGID BRACE ASSEMBLY, THREADED SUPPORT ROD AND DECK ANCHORAGE REQUIREMENTS SEE BRACING TABLES

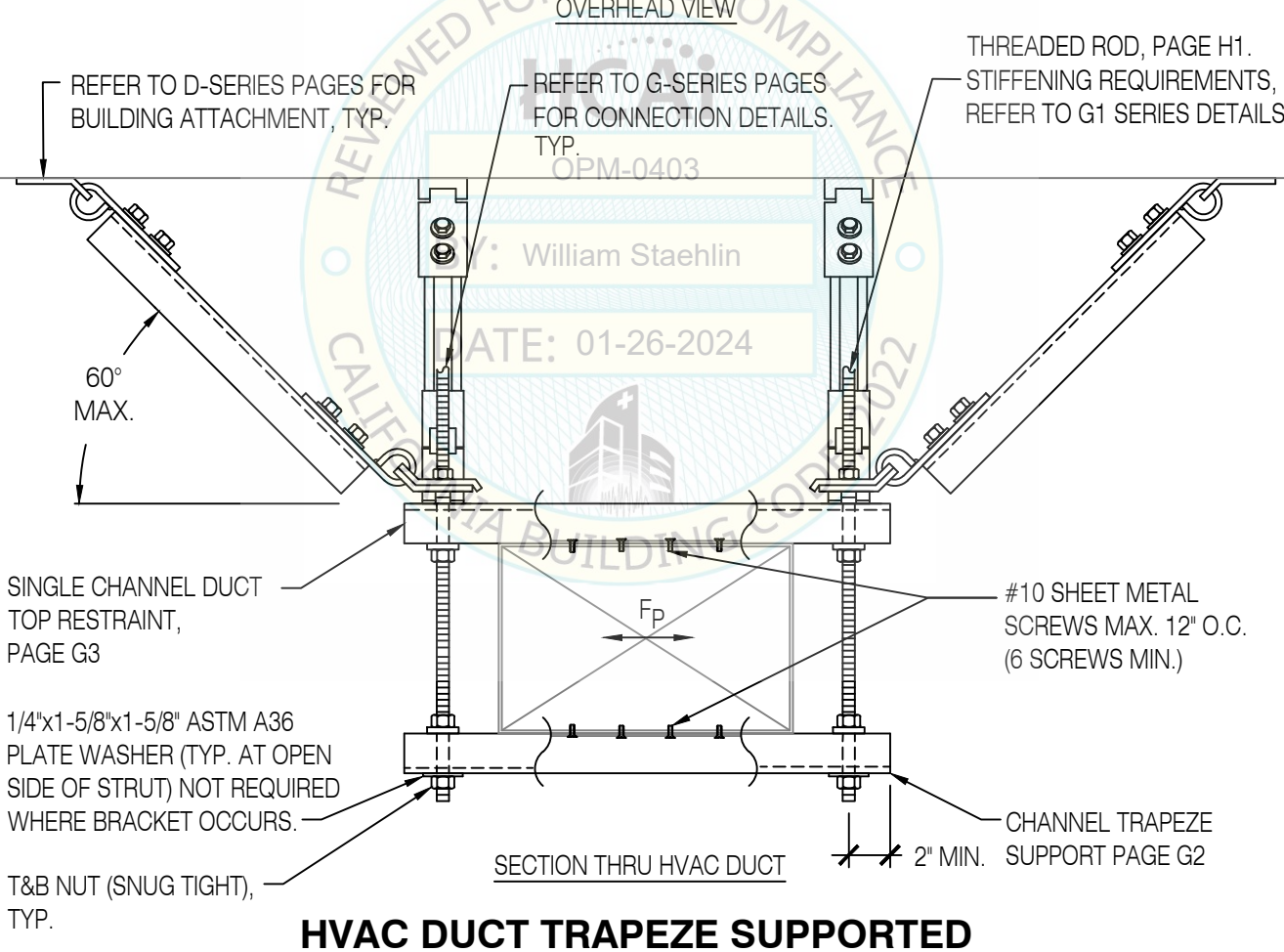

REVIEWED FOR CODE COMPLIANCE
HCAI
OPM-0403
BY: William Staehlin
DATE: 01-26-2024
CALIFORNIA BUILDING CODE 2022

HVAC DUCT TRAPEZE SUPPORTED
4-WAY TRANSVERSE-LONGITUDINAL, RIGID BRACING

REGISTERED PROFESSIONAL ENGINEER
MARCIN WASAZNIK
S 6612
STRUCTURAL
STATE OF CALIFORNIA

ISAT
A Division of Tomarco Contractor Specialties

International Seismic Application Technology
14848 Northam Street, La Mirada, CA 90638
877-999-4728 (Toll Free) 714-523-0845 (fax)
www.isatsb.com

Rev. 5
08/28/23

Page
B30.3

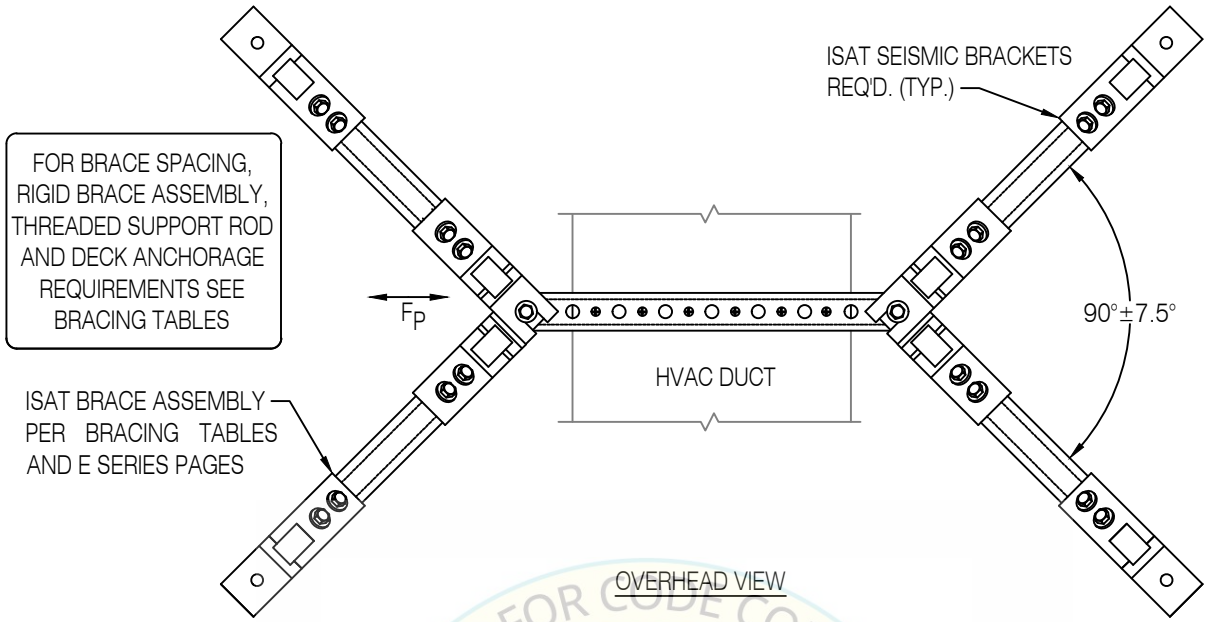

OVERHEAD VIEW

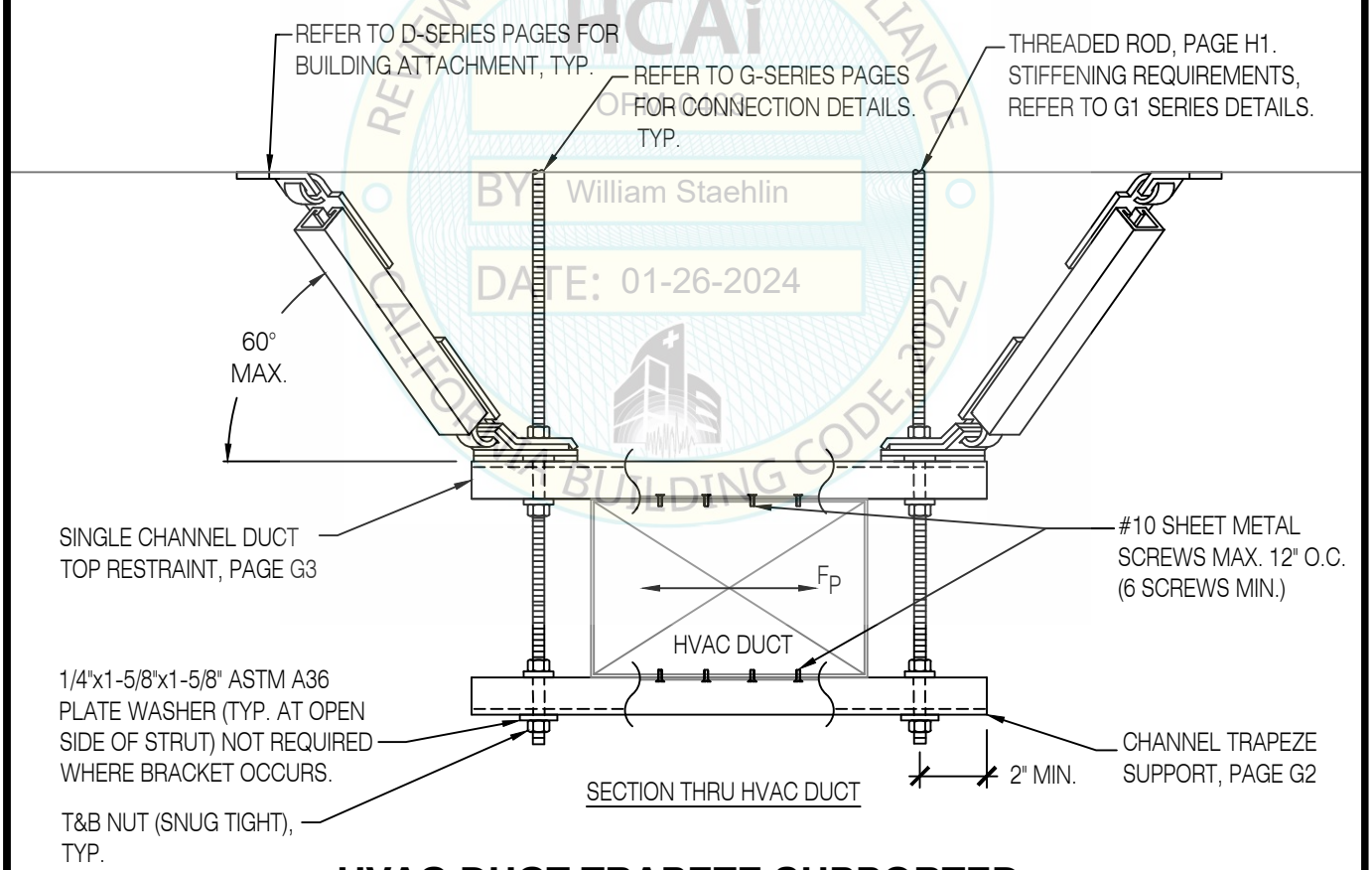

SECTION THRU HVAC DUCT

REVIEWED FOR CODE COMPLIANCE
HCAi
OPM-0403
BY: William Staehlin
DATE: 01-26-2024
CALIFORNIA BUILDING CODE 2022

HVAC DUCT TRAPEZE SUPPORTED
4-WAY SPLAYED TRANSVERSE-LONGITUDINAL, RIGID BRACING

REGISTERED PROFESSIONAL ENGINEER
MARCIN WASAZNIK
S 6612
STRUCTURAL
STATE OF CALIFORNIA

ISAT
A Division of Tomarco Contractor Specialties

International Seismic Application Technology
14848 Northam Street, La Mirada, CA 90638
877-999-4728 (Toll Free) 714-523-0845 (fax)
www.isatsb.com

Rev. 5
08/28/23

Page
B30.4

FOR BRACE SPACING, CABLE BRACE ASSEMBLY, THREADED SUPPORT ROD AND DECK ANCHORAGE REQUIREMENTS SEE BRACING TABLES

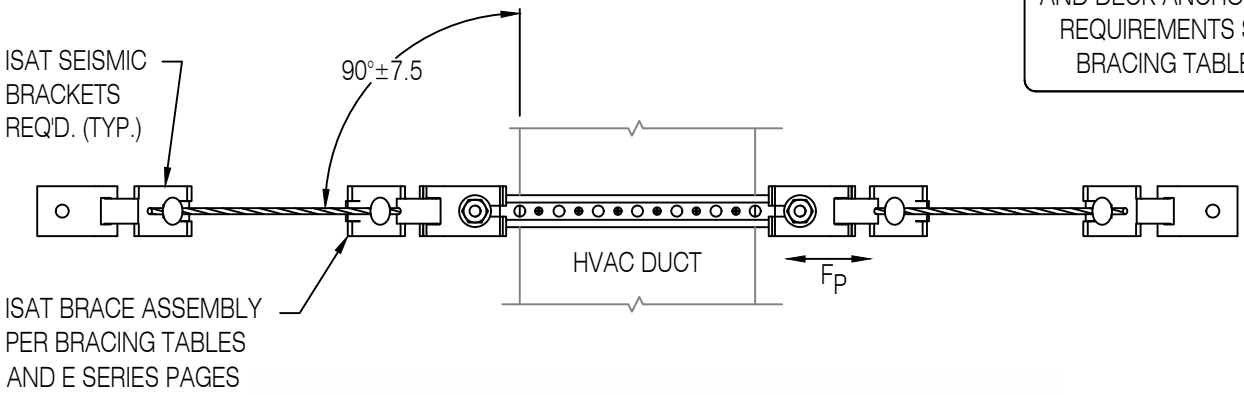

OVERHEAD VIEW

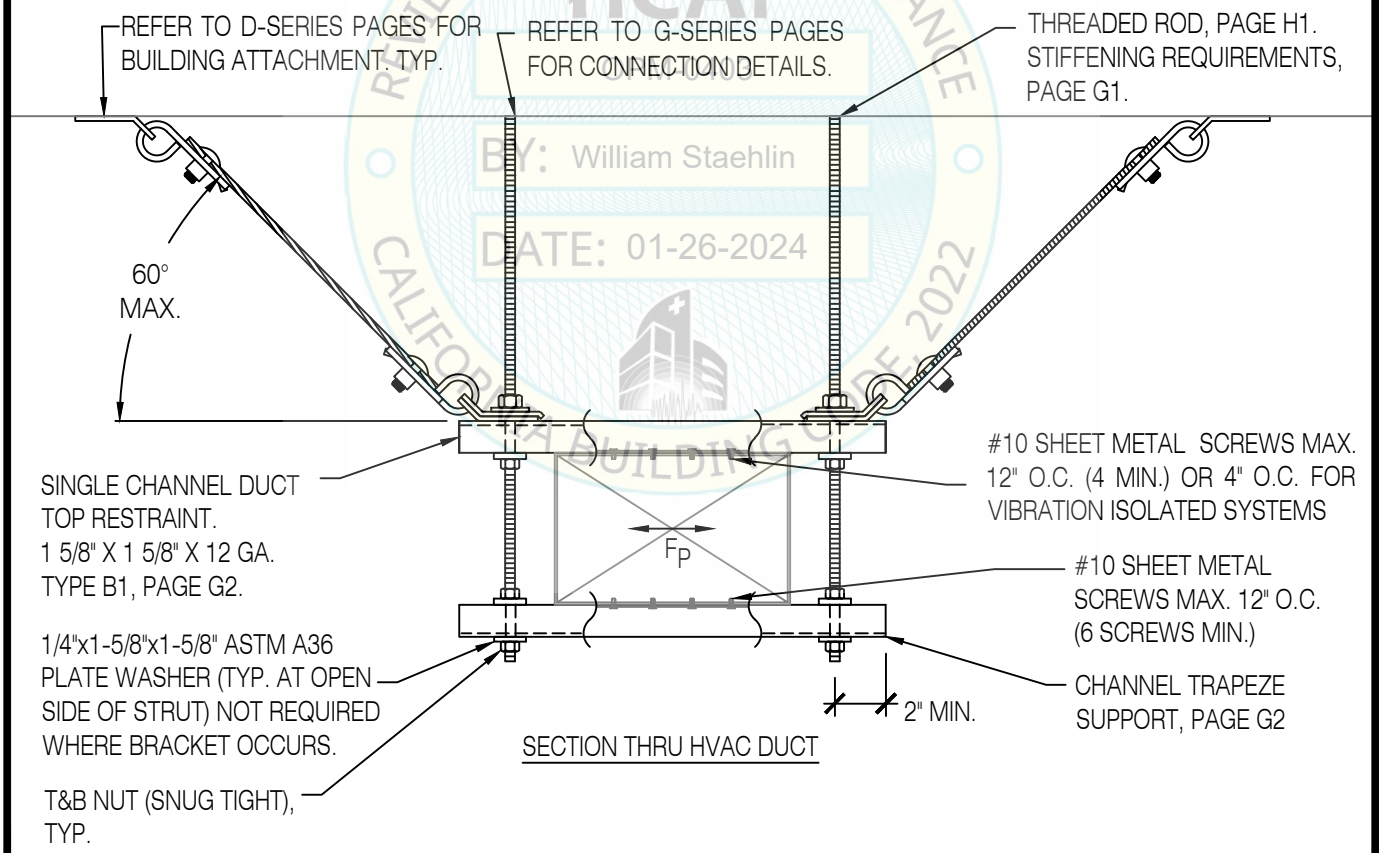

SECTION THRU HVAC DUCT

REVIEWED FOR CODE COMPLIANCE
HCAi
BY: William Staehlin
DATE: 01-26-2024
CALIFORNIA BUILDING CODE 2022

HVAC DUCT 2-WAY TRANSVERSE, CABLE BRACING

ISAT
A Division of Tomarco Contractor Specialties
International Seismic Application Technology
14848 Northam Street, La Mirada, CA 90638
877-999-4728 (Toll Free) 714-523-0845 (fax)
www.isatsb.com

Rev. 4
06/26/18

Page
B31.0

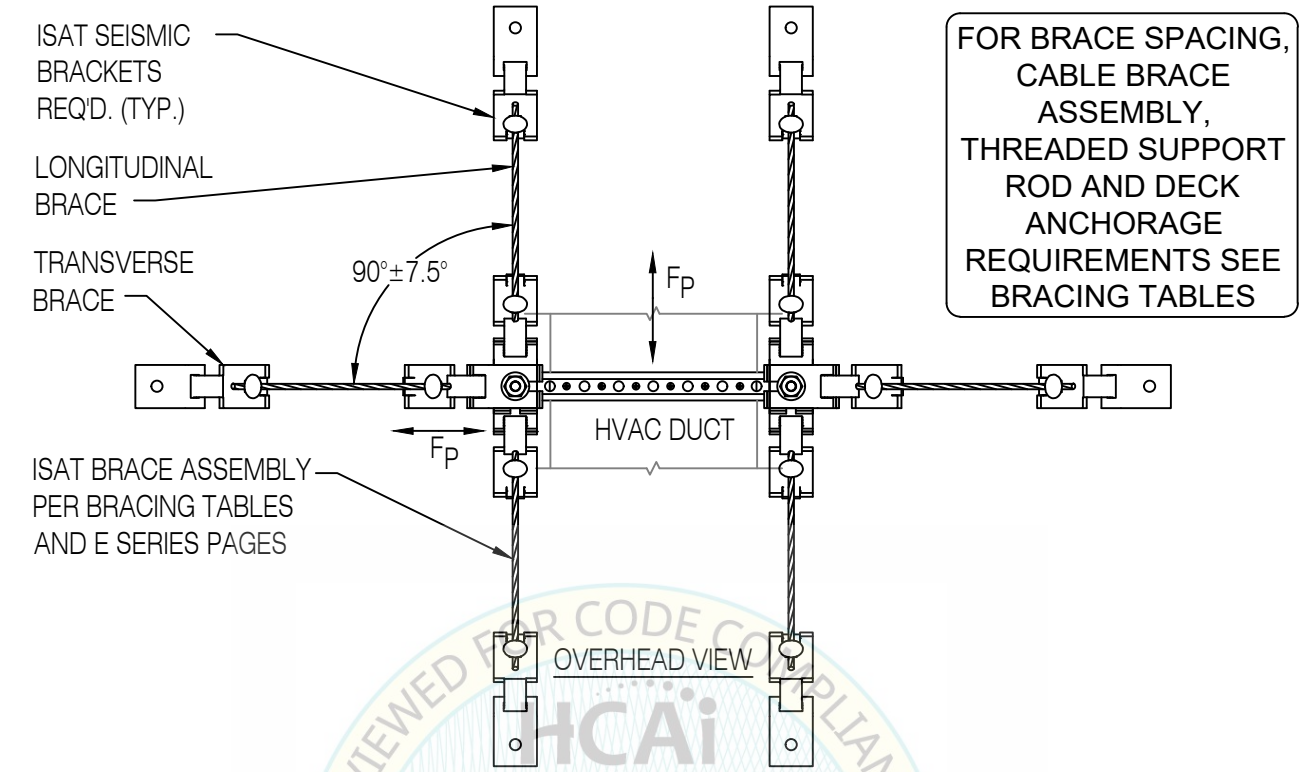

FOR BRACE SPACING, CABLE BRACE ASSEMBLY, THREADED SUPPORT ROD AND DECK ANCHORAGE REQUIREMENTS SEE BRACING TABLES

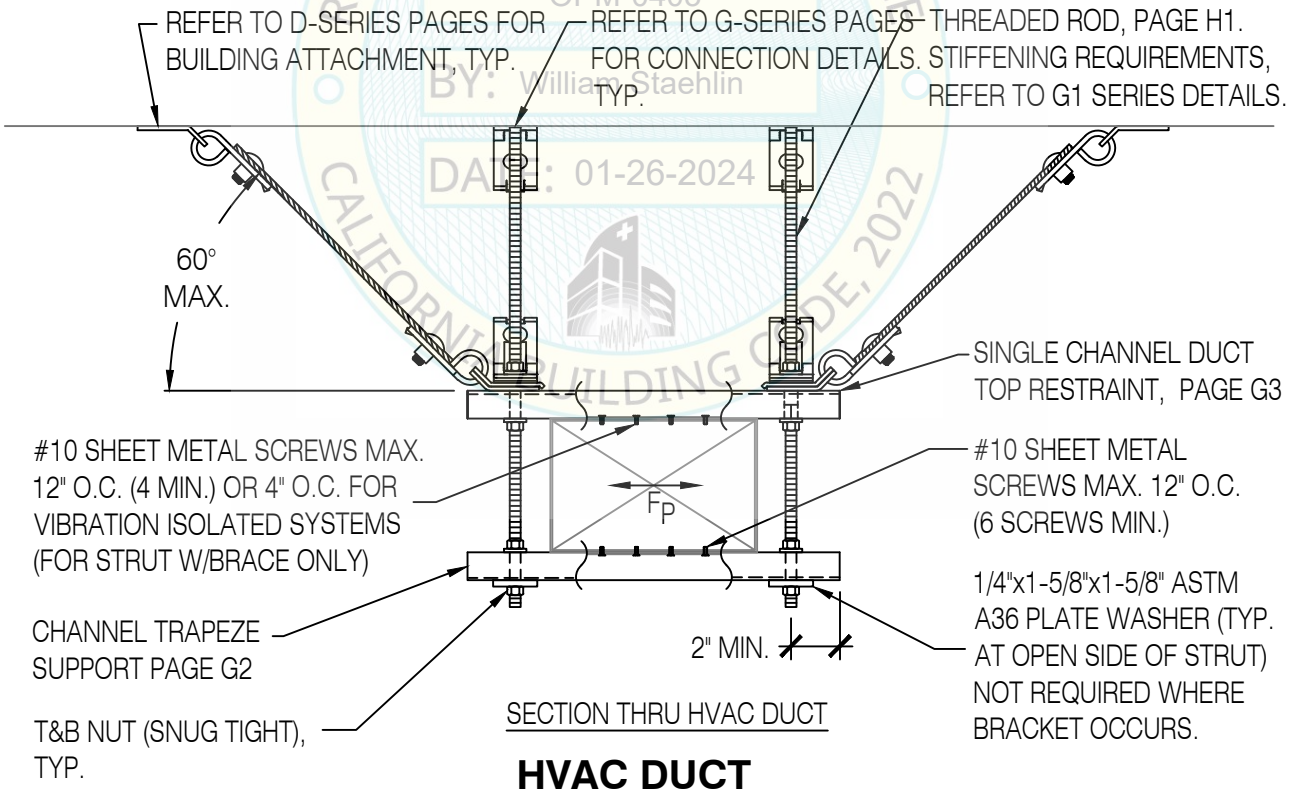

REVIEWED FOR CODE COMPLIANCE
HCAi
OPM-0403
BY: William Staehlin
DATE: 01-26-2024
CALIFORNIA BUILDING CODE, 2022

HVAC DUCT
6-WAY TRANSVERSE-LONGITUDINAL, CABLE BRACING

REGISTERED PROFESSIONAL ENGINEER MARCIN WASAZNIK S-6612 STRUCTURAL STATE OF CALIFORNIA

ISAT
A Division of Tomarco Contractor Specialties
International Seismic Application Technology
14848 Northam Street, La Mirada, CA 90638
877-999-4728 (Toll Free) 714-523-0845 (fax)
www.isatsb.com

Rev. 5
08/28/23

Page
B31.1

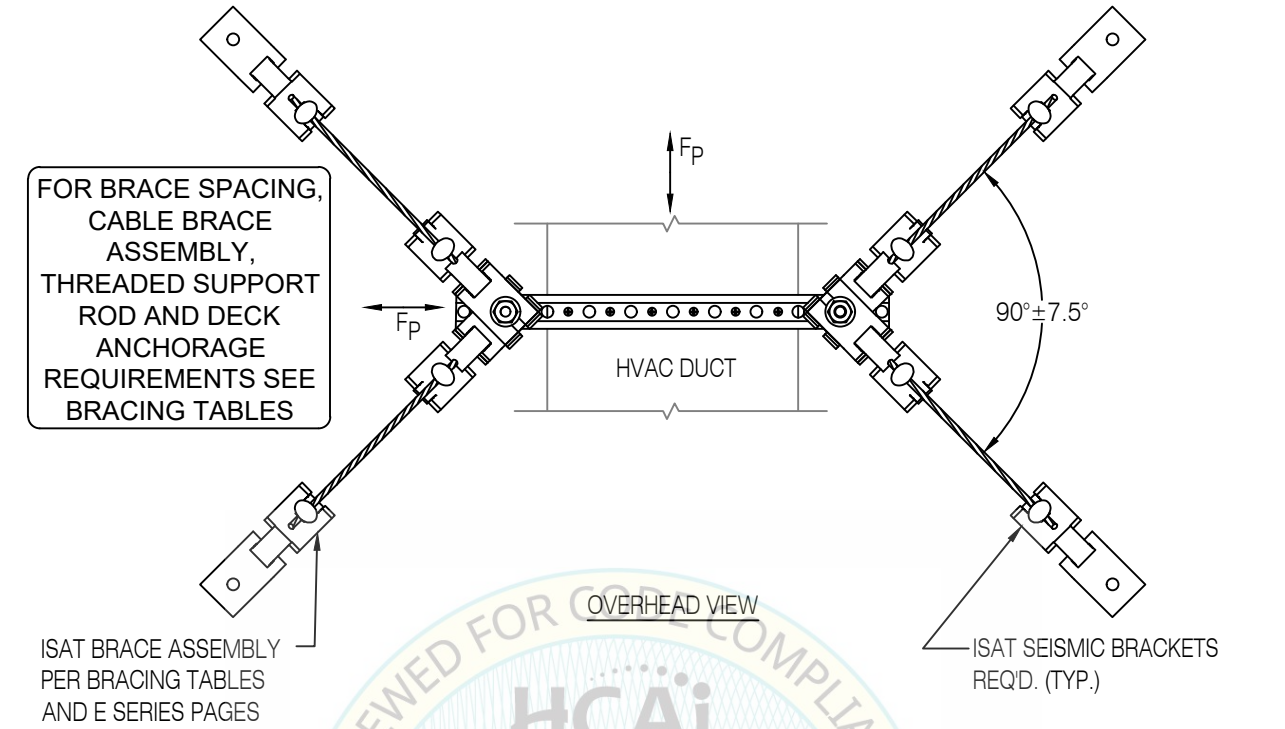

OVERHEAD VIEW

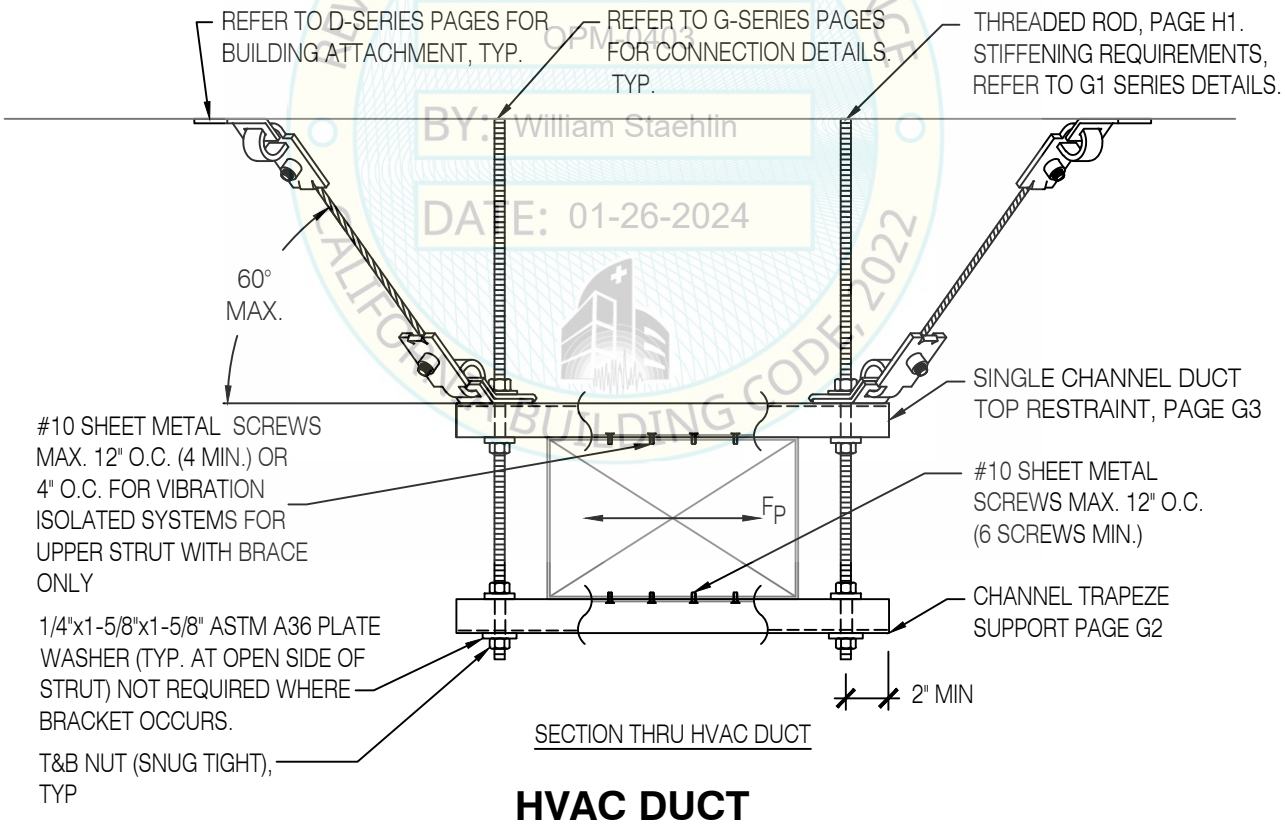

SECTION THRU HVAC DUCT

REVIEWED FOR CODE COMPLIANCE
HCAi
OPM-0403
BY: William Staehlin
DATE: 01-26-2024
CALIFORNIA BUILDING CODE 2022

HVAC DUCT

4-WAY SPLAYED TRANSVERSE-LONGITUDINAL, CABLE BRACING

REGISTERED PROFESSIONAL ENGINEER MARCIN WASAZNIK S-6612 STRUCTURAL STATE OF CALIFORNIA

ISAT
A Division of Tomarco Contractor Specialties
International Seismic Application Technology
14848 Northam Street, La Mirada, CA 90638
877-999-4728 (Toll Free) 714-523-0845 (fax)
www.isatsb.com

Rev. 5
08/28/23

Page
B31.2

FOR BRACE SPACING, RIGID BRACE ASSEMBLY, THREADED SUPPORT ROD AND DECK ANCHORAGE REQUIREMENTS SEE BRACING TABLES

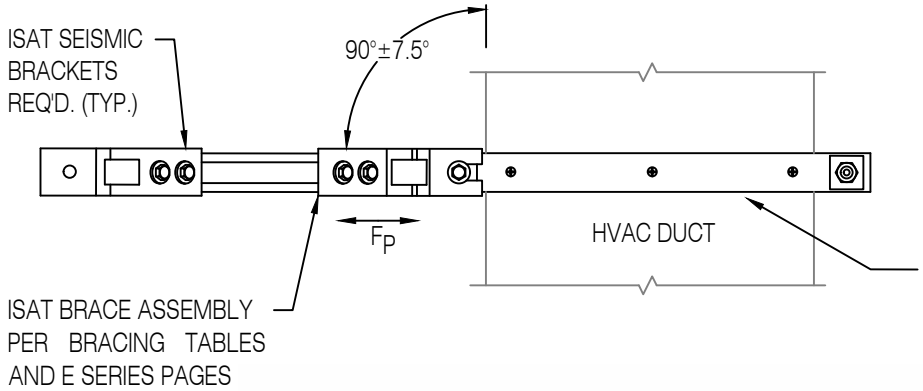

DUCT DIA.	STRAP SIZES
>33"	12 GA X 2 1/2"
24" TO 33"	14 GA X 2 1/2"
16" TO 24"	16 GA X 2 1/2"
<16"	18 GA X 2 1/2"

OVERHEAD VIEW

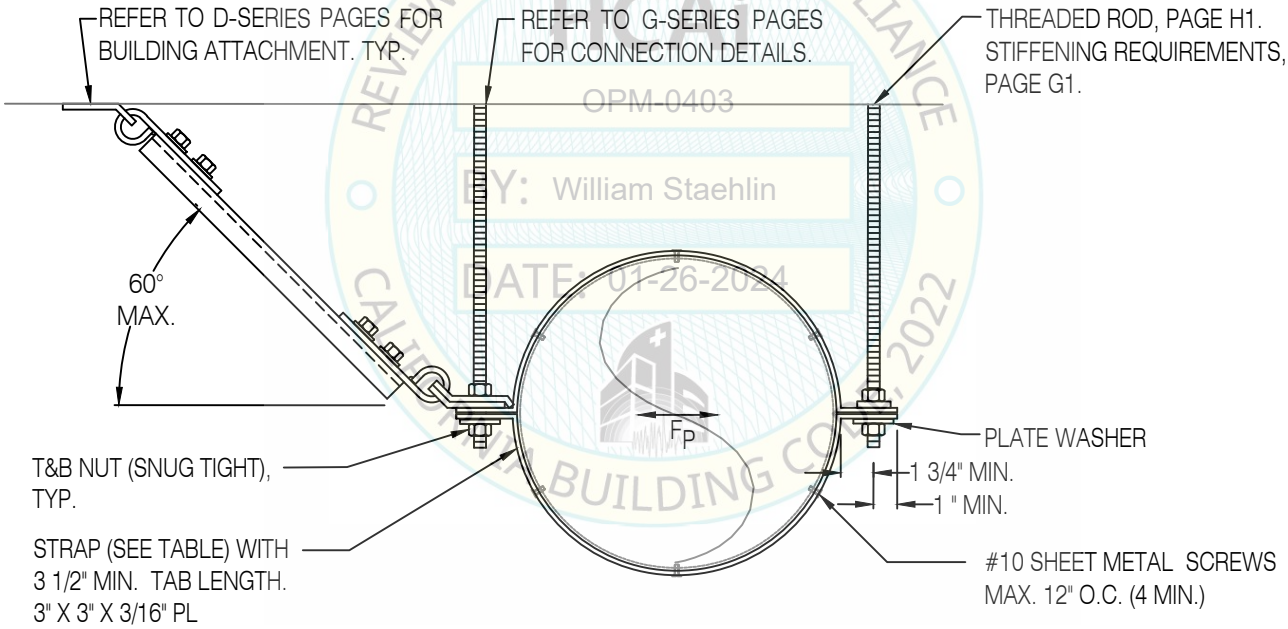

SECTION THRU ROUND HVAC DUCT

REVIEWED FOR CODE COMPLIANCE
HCAi
OPM-0403
BY: William Staehlin
DATE: 01-26-2024
CALIFORNIA BUILDING CODE 2022

ROUND HVAC DUCT
1-WAY TRANSVERSE, RIGID BRACING

ISAT
A Division of Tomarco Contractor Specialties
International Seismic Application Technology
14848 Northam Street, La Mirada, CA 90638
877-999-4728 (Toll Free) 714-523-0845 (fax)
www.isatsb.com

Rev. 3
06/26/18

Page
B33.0

FOR BRACE SPACING, RIGID BRACE ASSEMBLY, THREADED SUPPORT ROD AND DECK ANCHORAGE REQUIREMENTS SEE BRACING TABLES

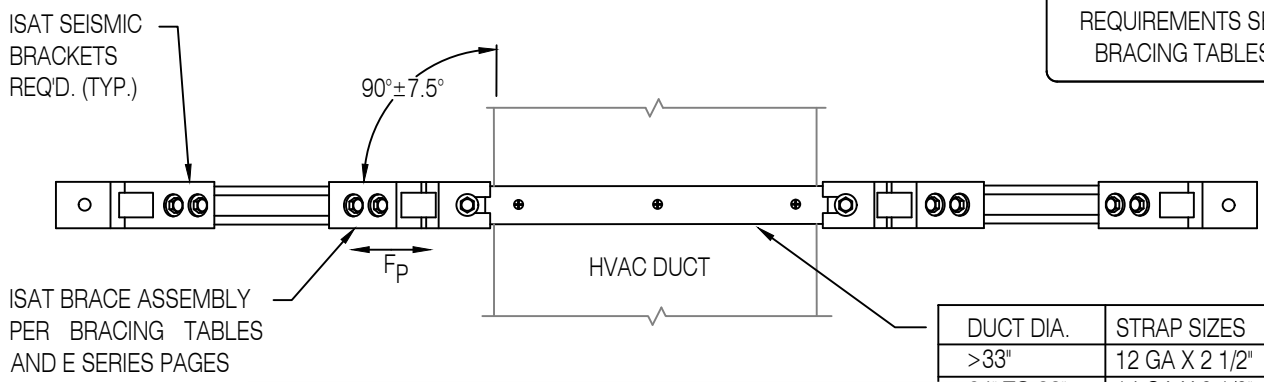

DUCT DIA.	STRAP SIZES
>33"	12 GA X 2 1/2"
24" TO 33"	14 GA X 2 1/2"
16" TO 24"	16 GA X 2 1/2"
<16"	18 GA X 2 1/2"

OVERHEAD VIEW

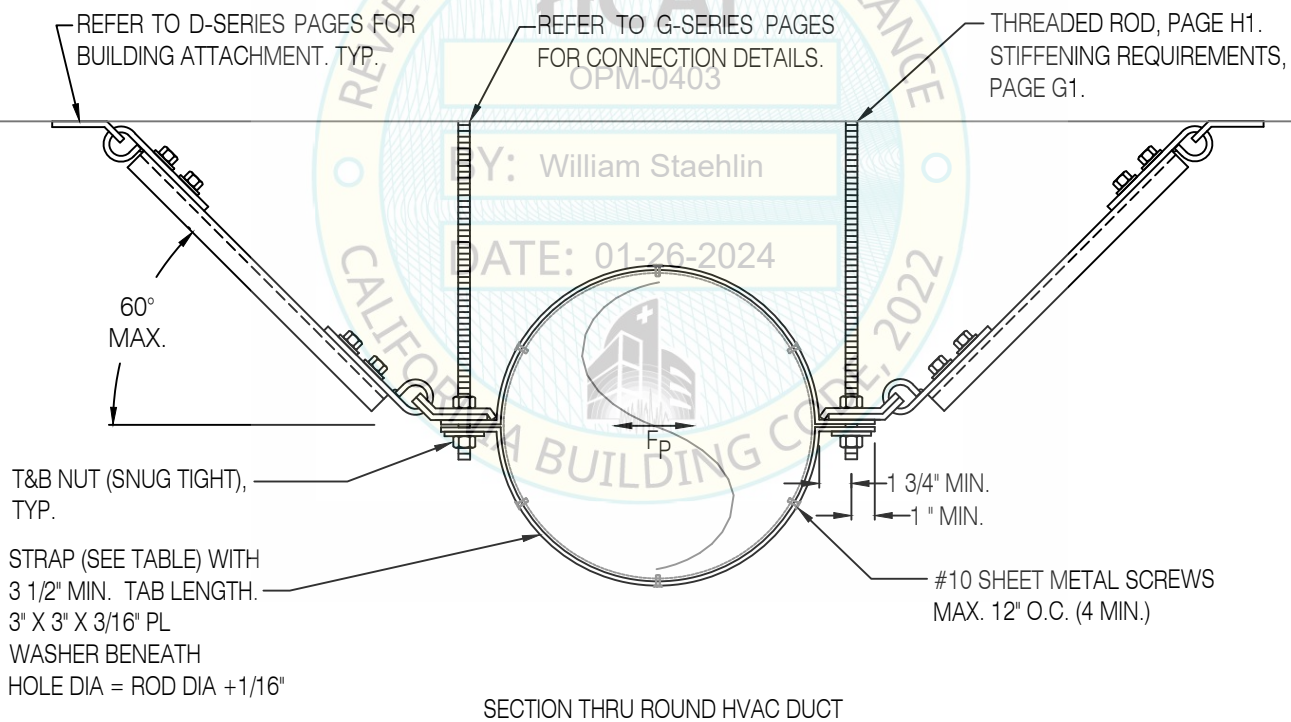

SECTION THRU ROUND HVAC DUCT

REVIEWED FOR CODE COMPLIANCE
HCAi
OPM-0403
BY: William Staehlin
DATE: 01-26-2024
CALIFORNIA BUILDING CODE 2022

ROUND HVAC DUCT
2-WAY TRANSVERSE, RIGID BRACING

REGISTERED PROFESSIONAL ENGINEER MARCIN WASAZNIK S-6612 STRUCTURAL STATE OF CALIFORNIA

ISAT
A Division of Tomarco Contractor Specialties
International Seismic Application Technology
14848 Northam Street, La Mirada, CA 90638
877-999-4728 (Toll Free) 714-523-0845 (fax)
www.isatsb.com

Rev. 3
06/26/18

Page
B33.1

FOR BRACE SPACING, RIGID BRACE ASSEMBLY, THREADED SUPPORT ROD AND DECK ANCHORAGE REQUIREMENTS SEE BRACING TABLES

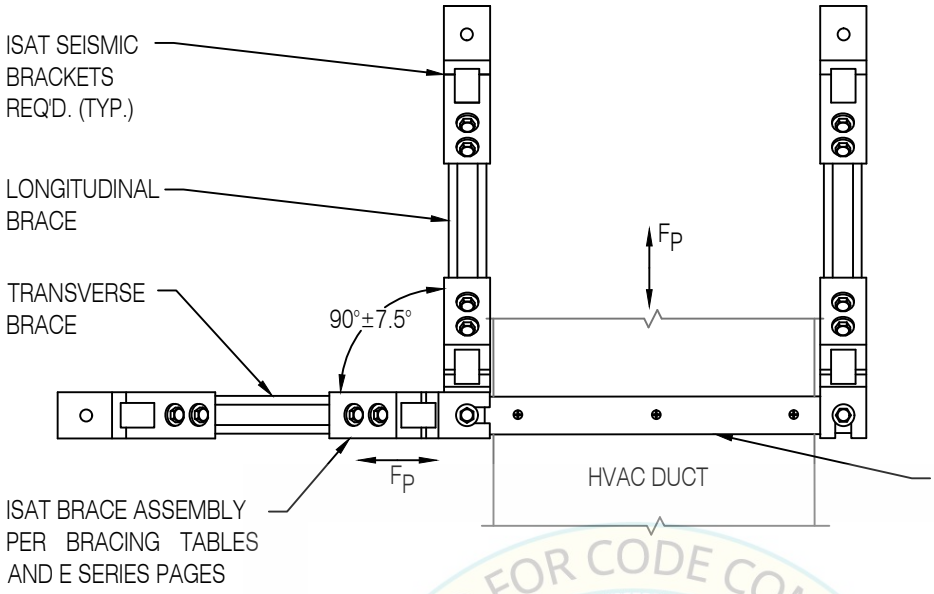

DUCT DIA.	STRAP SIZES
>33"	12 GA X 2 1/2"
24" TO 33"	14 GA X 2 1/2"
16" TO 24"	16 GA X 2 1/2"
<16"	18 GA X 2 1/2"

OVERHEAD VIEW

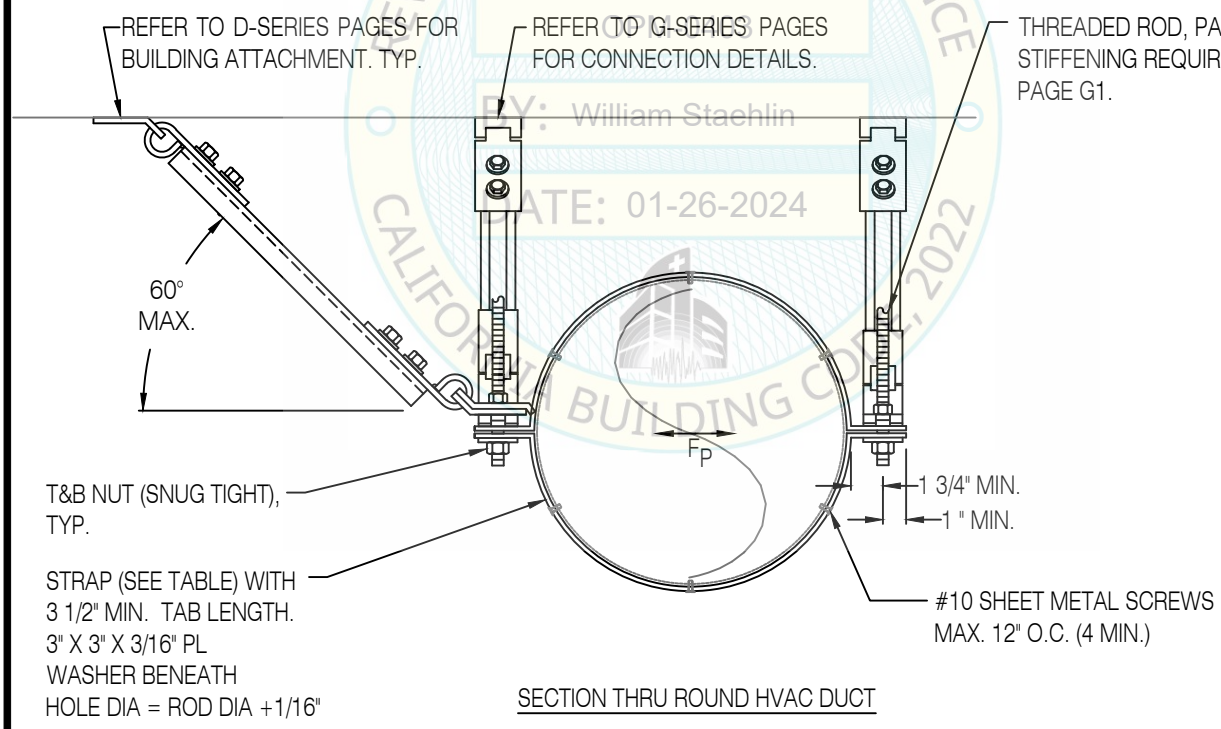

SECTION THRU ROUND HVAC DUCT

REVIEWED FOR CODE COMPLIANCE
HCAi
BY: William Staehlin
DATE: 01-26-2024
CALIFORNIA BUILDING CODE, 2022

ROUND HVAC DUCT
3-WAY TRANSVERSE-LONGITUDINAL RIGID BRACING

REGISTERED PROFESSIONAL ENGINEER MARCIN WASAZNIK S-6612 STRUCTURAL STATE OF CALIFORNIA

ISAT
A Division of Tomarco Contractor Specialties
International Seismic Application Technology
14848 Northam Street, La Mirada, CA 90638
877-999-4728 (Toll Free) 714-523-0845 (fax)
www.isatsb.com

Rev. 3
06/26/18

Page
B33.2

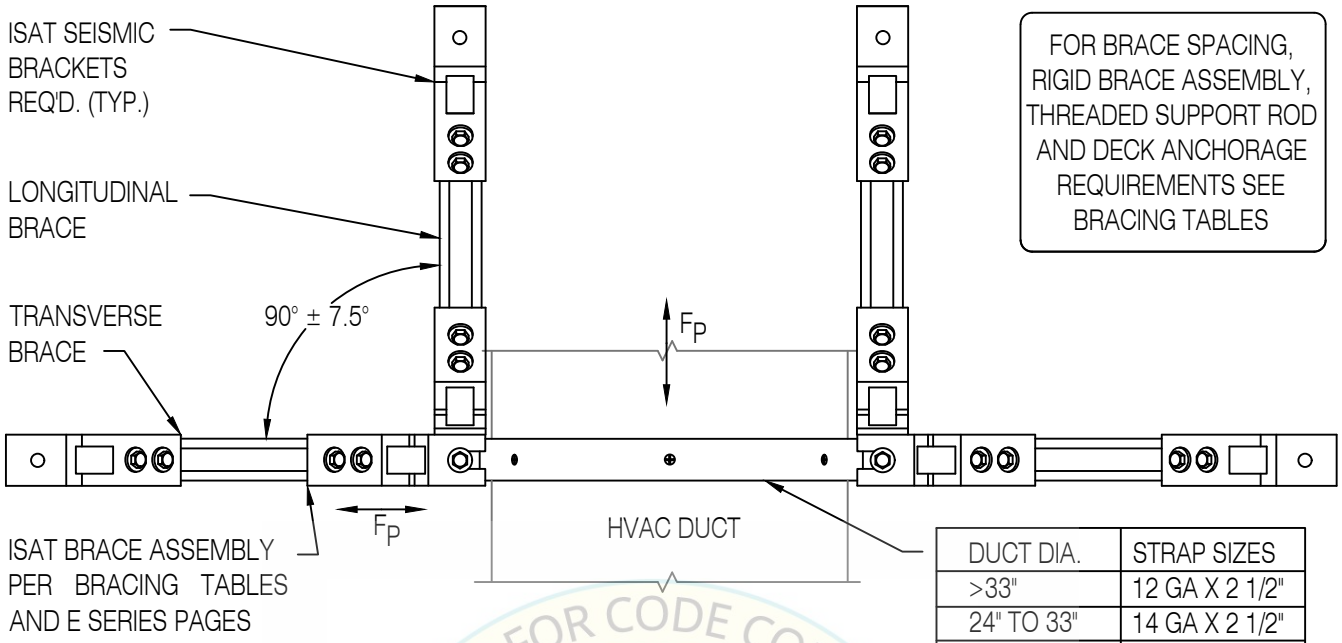

FOR BRACE SPACING, RIGID BRACE ASSEMBLY, THREADED SUPPORT ROD AND DECK ANCHORAGE REQUIREMENTS SEE BRACING TABLES

DUCT DIA.	STRAP SIZES
>33"	12 GA X 2 1/2"
24" TO 33"	14 GA X 2 1/2"
16" TO 24"	16 GA X 2 1/2"
<16"	18 GA X 2 1/2"

OVERHEAD VIEW

REVIEWED FOR CODE COMPLIANCE
HCAI
OPM-0403
BY: William Staehlin
DATE: 01-26-2024
CALIFORNIA BUILDING CODE 2022

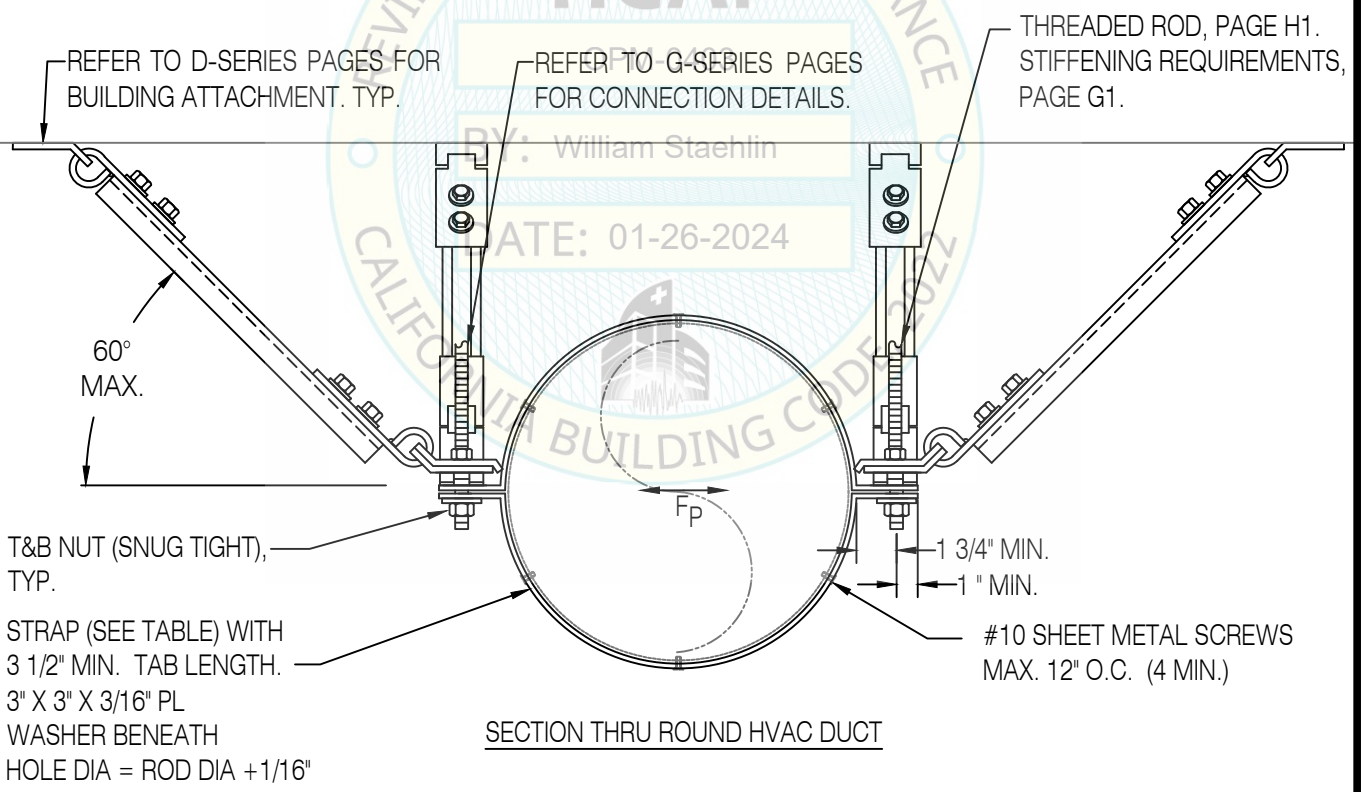

SECTION THRU ROUND HVAC DUCT

ROUND HVAC DUCT
4-WAY TRANSVERSE-LONGITUDINAL, RIGID BRACING

REGISTERED PROFESSIONAL ENGINEER MARCIN WASAZNIK S-6612 STRUCTURAL STATE OF CALIFORNIA

ISAT
A Division of Tomarco Contractor Specialties
International Seismic Application Technology
14848 Northam Street, La Mirada, CA 90638
877-999-4728 (Toll Free) 714-523-0845 (fax)
www.isatsb.com

Rev. 3
06/26/18

Page
B33.3

DUCT DIA.	STRAP SIZES
>33"	12 GA X 2 1/2"
24" TO 33"	14 GA X 2 1/2"
16" TO 24"	16 GA X 2 1/2"
<16"	18 GA X 2 1/2"

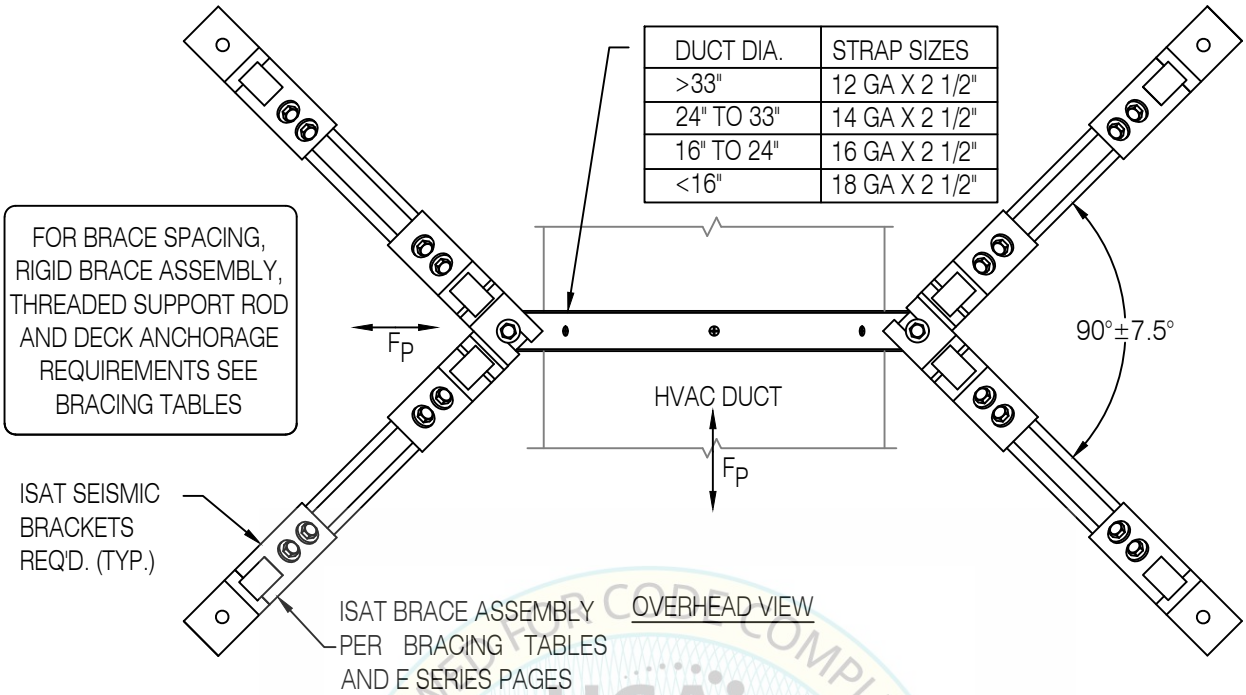

OVERHEAD VIEW

HCAi
OPM-0403
BY: William Staehlin
DATE: 01-26-2024
REVIEWED FOR CODE COMPLIANCE
CALIFORNIA BUILDING CODE, 2022

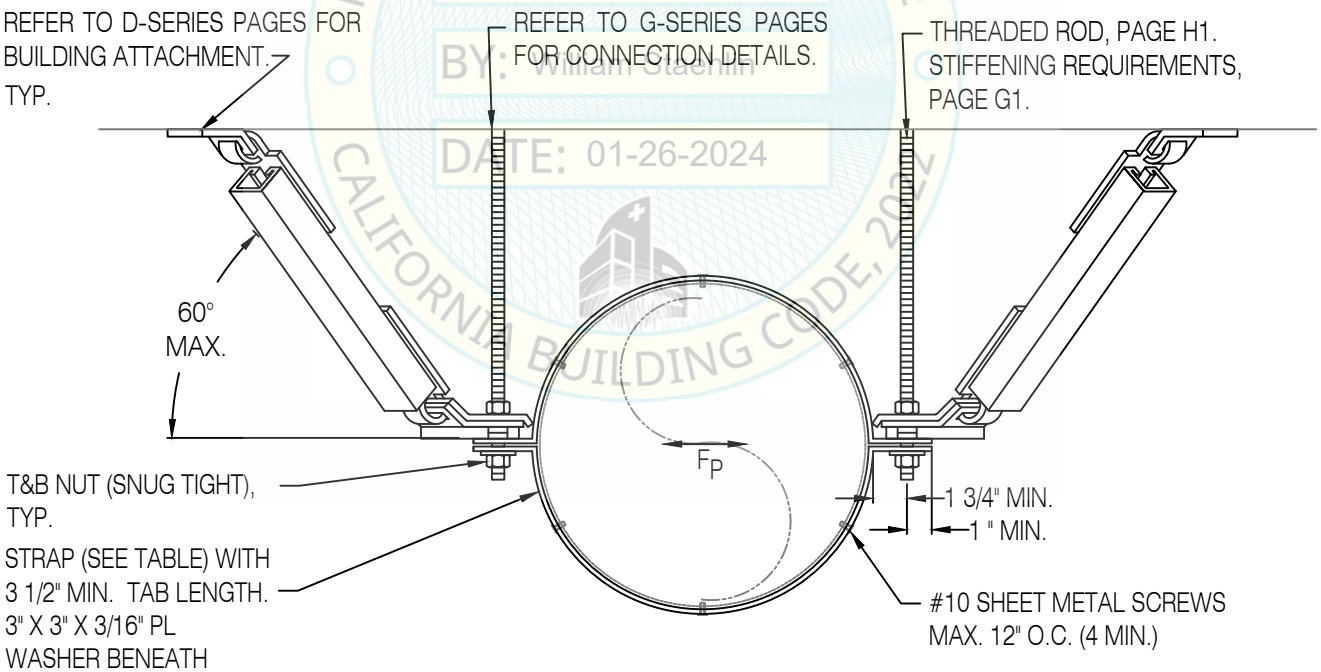

SECTION THRU ROUND HVAC DUCT

ROUND HVAC DUCT
4-WAY SPLAYED TRANSVERSE-LONGITUDINAL, RIGID BRACING

REGISTERED PROFESSIONAL ENGINEER MARCIN WASAZNIK S-6612 STRUCTURAL STATE OF CALIFORNIA

ISAT
A Division of Tomarco Contractor Specialties
International Seismic Application Technology
14848 Northam Street, La Mirada, CA 90638
877-999-4728 (Toll Free) 714-523-0845 (fax)
www.isatsb.com

Rev. 3
06/26/18

Page
B33.4

FOR BRACE SPACING, CABLE BRACE ASSEMBLY, THREADED SUPPORT ROD AND DECK ANCHORAGE REQUIREMENTS SEE BRACING TABLES

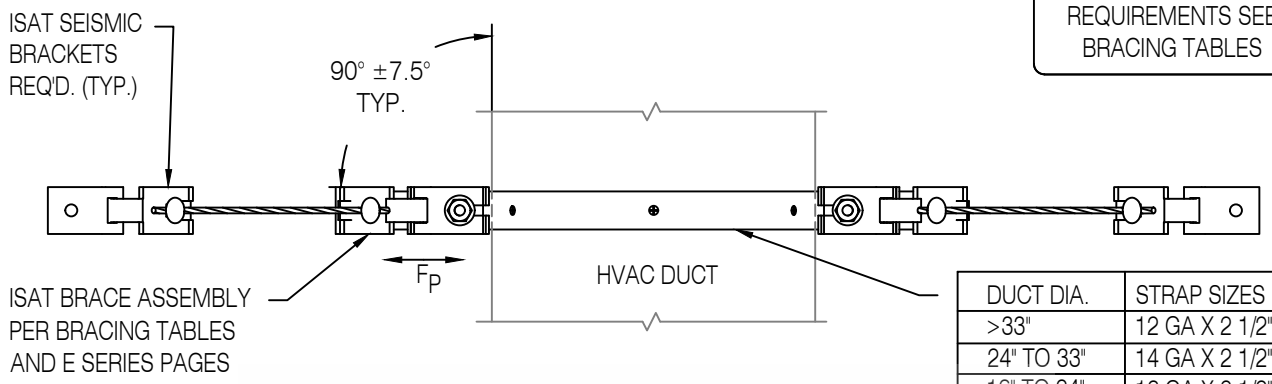

DUCT DIA.	STRAP SIZES
>33"	12 GA X 2 1/2"
24" TO 33"	14 GA X 2 1/2"
16" TO 24"	16 GA X 2 1/2"
<16"	18 GA X 2 1/2"

OVERHEAD VIEW

REVIEWED FOR CODE COMPLIANCE
HCAi
OPM-0403
BY: William Staehlin
DATE: 01-26-2024
CALIFORNIA BUILDING CODE, 2022

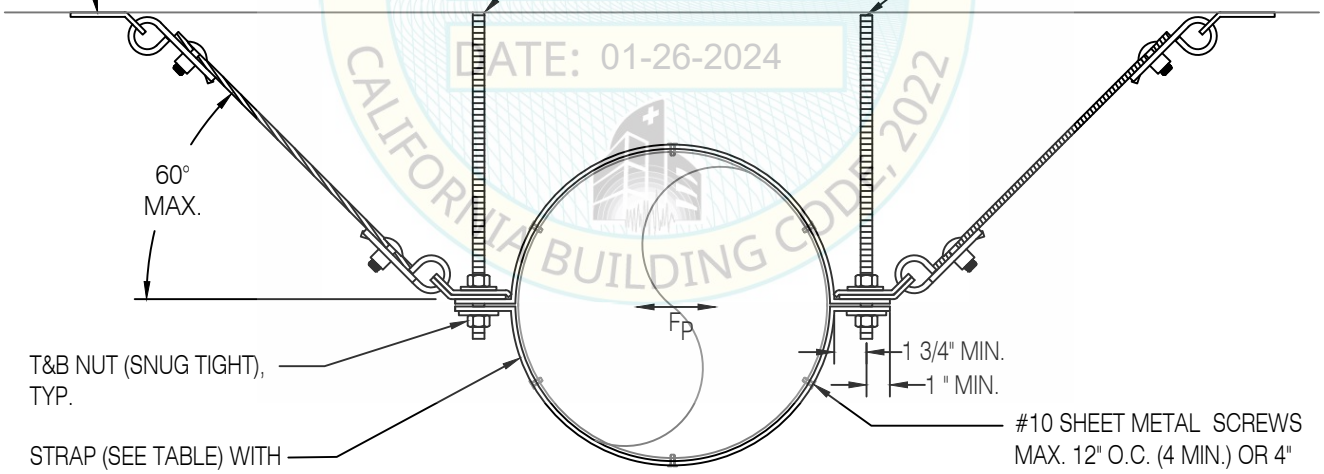

SECTION THRU ROUND HVAC DUCT

ROUND HVAC DUCT 2-WAY TRANSVERSE, CABLE BRACING

REGISTERED PROFESSIONAL ENGINEER MARCIN WASAZNIK S-6612 STRUCTURAL STATE OF CALIFORNIA

ISAT
A Division of Tomarco Contractor Specialties
International Seismic Application Technology
14848 Northam Street, La Mirada, CA 90638
877-999-4728 (Toll Free) 714-523-0845 (fax)
www.isatsb.com

Rev. 3
06/26/18

Page
B34.0

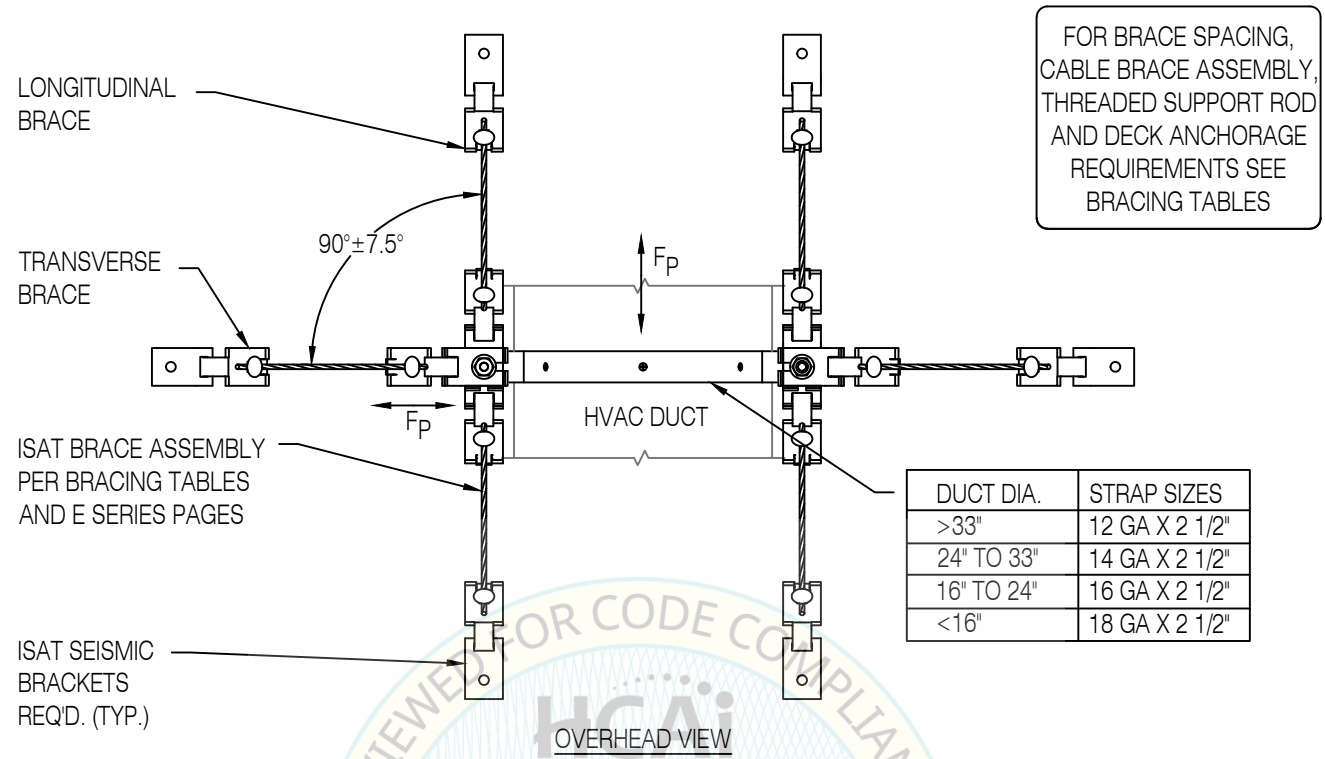

DUCT DIA.	STRAP SIZES
>33"	12 GA X 2 1/2"
24" TO 33"	14 GA X 2 1/2"
16" TO 24"	16 GA X 2 1/2"
<16"	18 GA X 2 1/2"

OVERHEAD VIEW

REVIEWED FOR CODE COMPLIANCE
HCAi
OPM-0403
BY: William Staehlin
DATE: 01-26-2024
CALIFORNIA BUILDING CODE, 2022

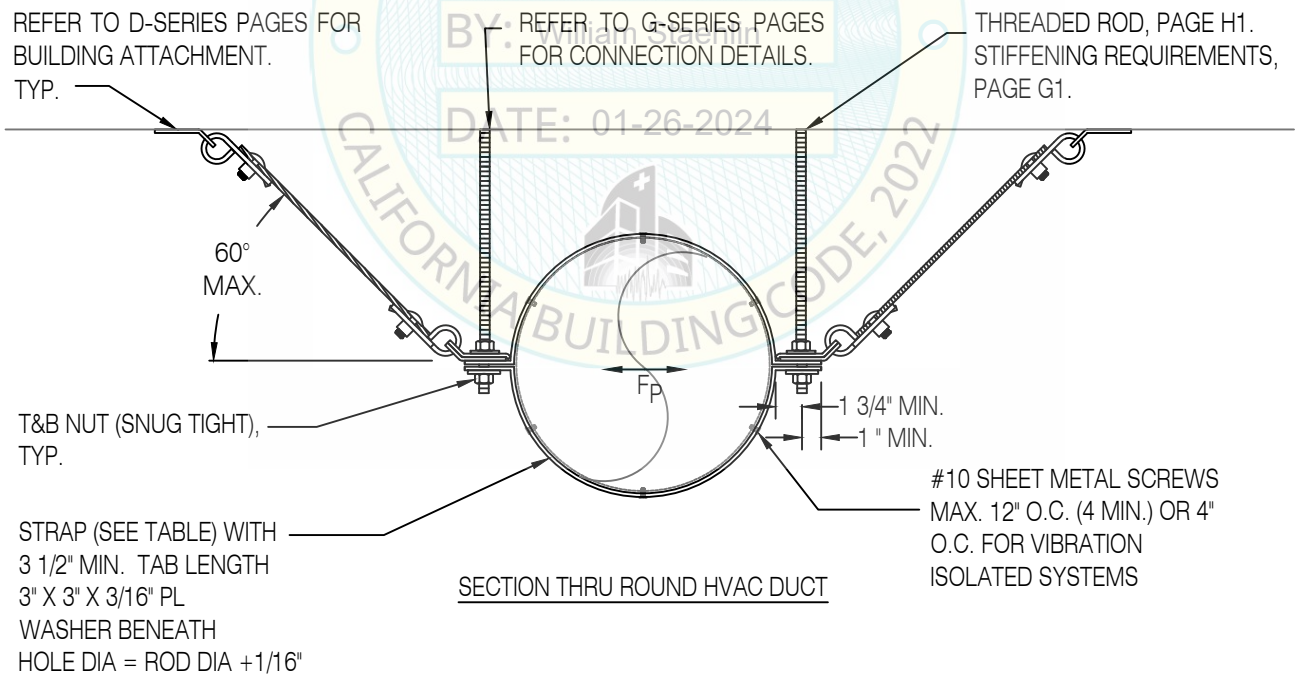

SECTION THRU ROUND HVAC DUCT

ROUND HVAC DUCT
6-WAY TRANSVERSE-LONGITUDINAL, CABLE BRACING

REGISTERED PROFESSIONAL ENGINEER MARCIN WASAZNIK S-6612 STRUCTURAL STATE OF CALIFORNIA

ISAT
A Division of Tomarco Contractor Specialties
International Seismic Application Technology
14848 Northam Street, La Mirada, CA 90638
877-999-4728 (Toll Free) 714-523-0845 (fax)
www.isatsb.com

Rev. 3
06/26/18

Page
B34.1

DUCT DIA.	STRAP SIZES
>33"	12 GA X 2 1/2"
24" TO 33"	14 GA X 2 1/2"
16" TO 24"	16 GA X 2 1/2"
<16"	18 GA X 2 1/2"

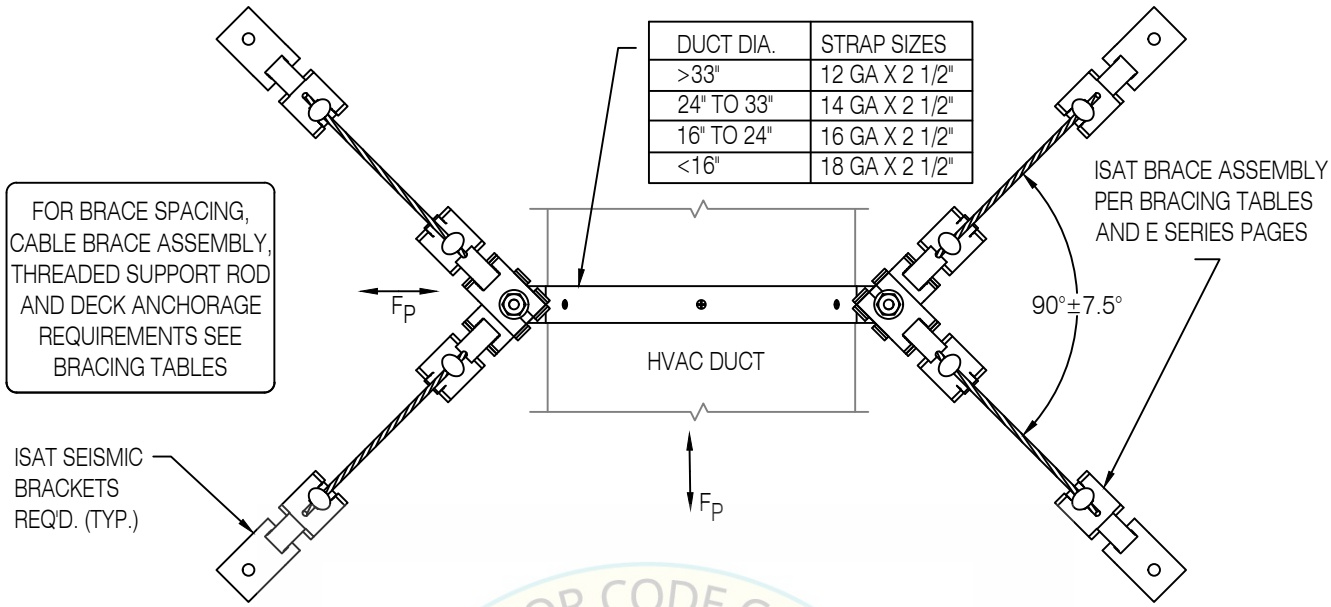

OVERHEAD VIEW

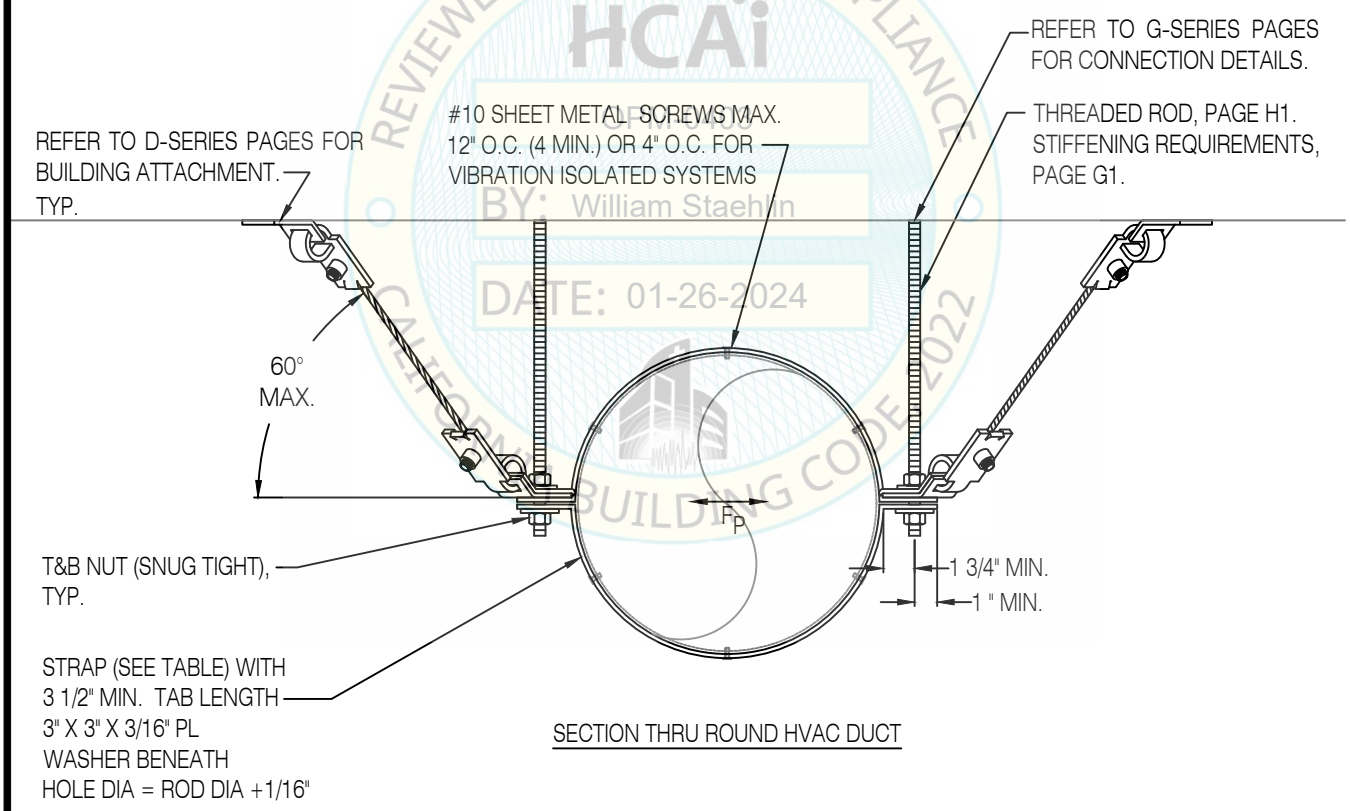

SECTION THRU ROUND HVAC DUCT

REVIEWED FOR CODE COMPLIANCE
HCAi
BY: William Staehlin
DATE: 01-26-2024
CALIFORNIA BUILDING CODE 2022

ROUND HVAC DUCT
4-WAY SPLAYED TRANSVERSE-LONGITUDINAL, CABLE BRACING

REGISTERED PROFESSIONAL ENGINEER MARCIN WASAZNIK S-6612 STRUCTURAL STATE OF CALIFORNIA

ISAT
A Division of Tomarco Contractor Specialties
International Seismic Application Technology
14848 Northam Street, La Mirada, CA 90638
877-999-4728 (Toll Free) 714-523-0845 (fax)
www.isatsb.com

Rev. 3
06/26/18

Page
B34.2

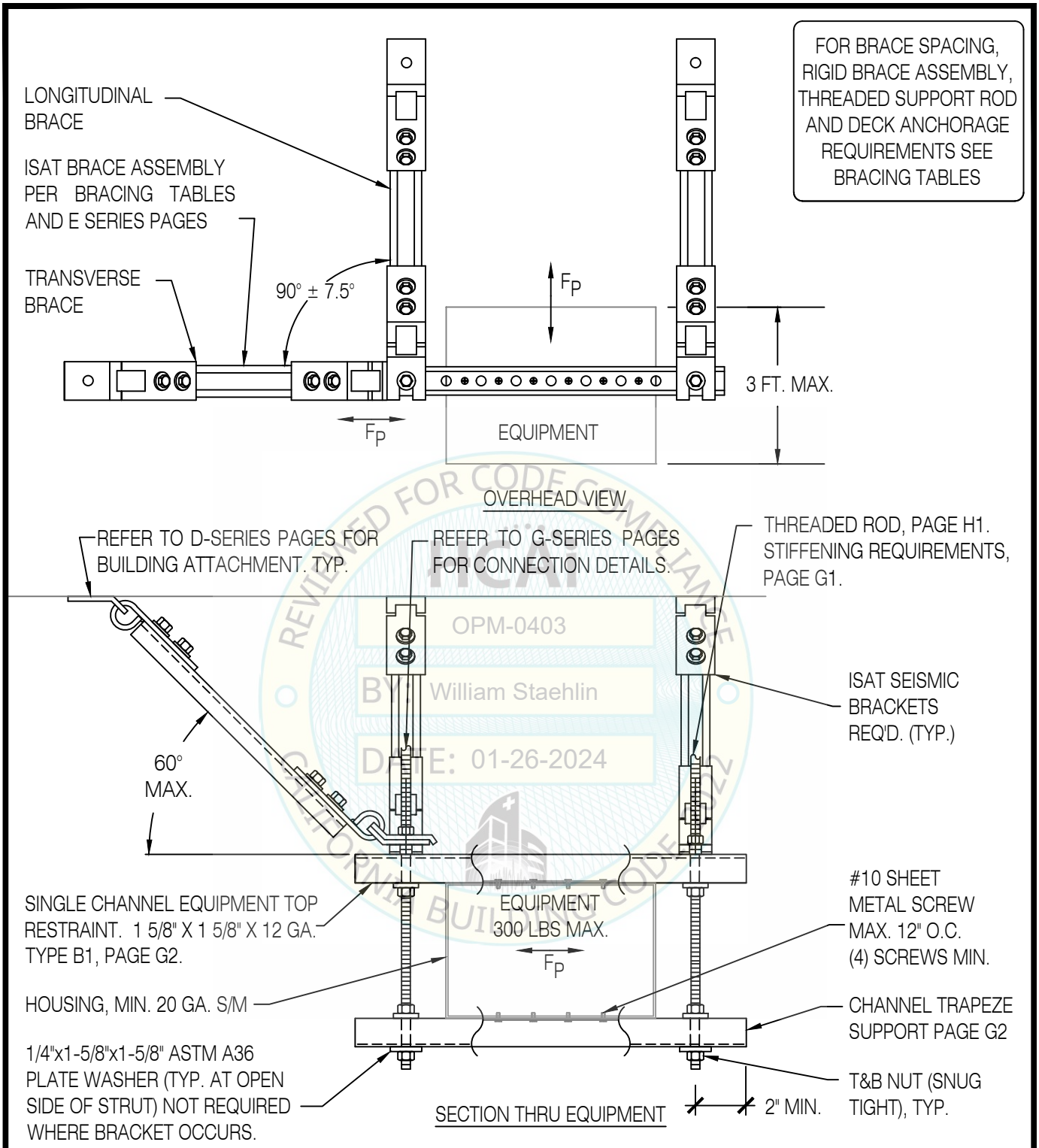

REVIEWED FOR CODE COMPLIANCE
OPM-0403
BY: William Staehlin
DATE: 01-26-2024
CALIFORNIA BUILDING CODE 2022

MAXIMUM UNIT LENGTH 3 FEET. FOR UNITS EXCEEDING 3 FEET SEE PAGES B38.1 & B38.2

IN-LINE EQUIPMENT

3-WAY TRANSVERSE-LONGITUDINAL, RIGID BRACING

REGISTERED PROFESSIONAL ENGINEER MARCIN WASAZNIK S-6612 STRUCTURAL STATE OF CALIFORNIA

ISAT
A Division of Tomarco Contractor Specialties
International Seismic Application Technology
14848 Northam Street, La Mirada, CA 90638
877-999-4728 (Toll Free) 714-523-0845 (fax)
www.isatsb.com

Rev. 5
06/26/18

Page
B38.0

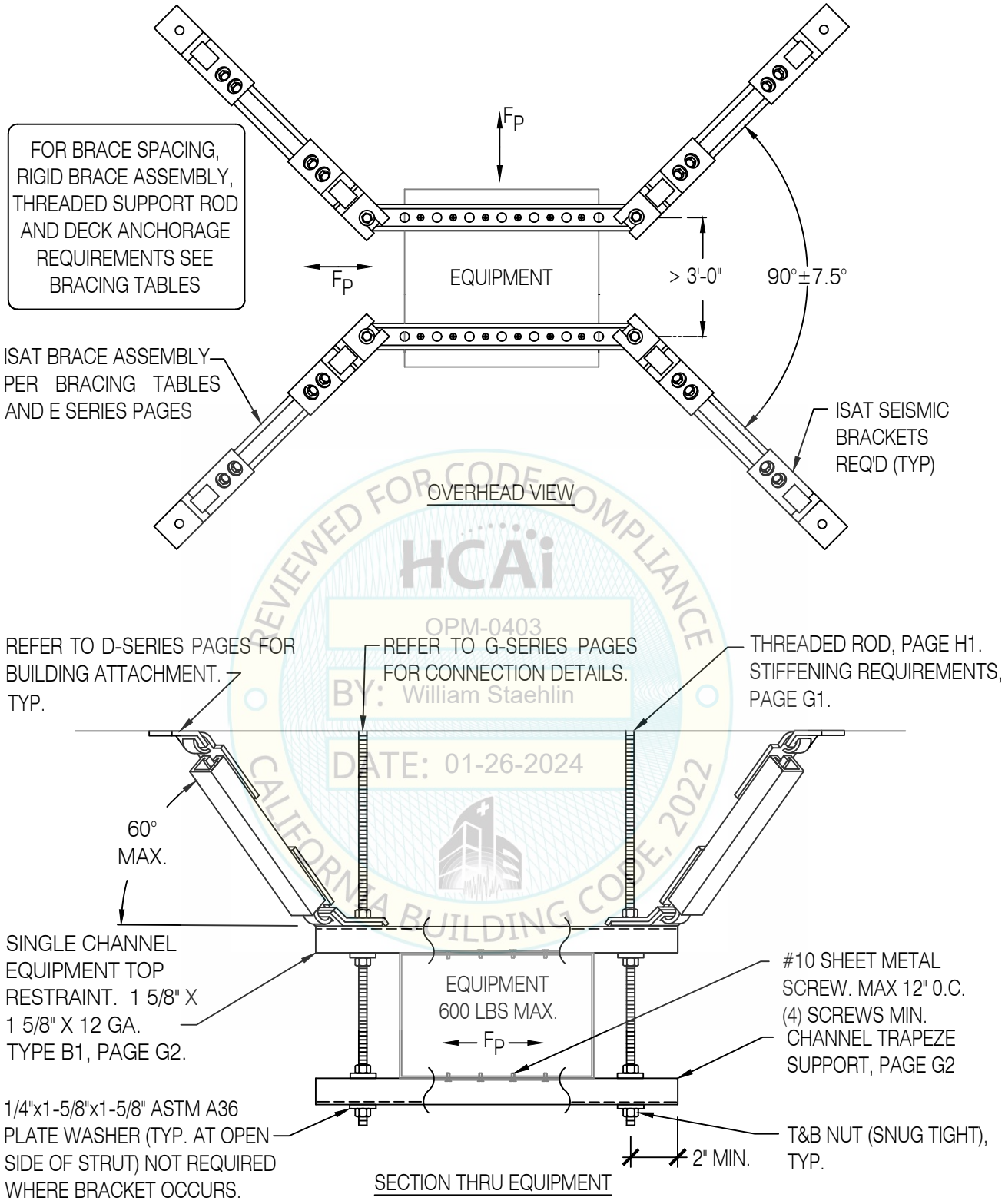

REVIEWED FOR CODE COMPLIANCE
HCAi
OPM-0403
BY: William Staehlin
DATE: 01-26-2024
CALIFORNIA BUILDING CODE, 2022

4-ROD SUSPENDED EQUIPMENT
4-WAY SPLAYED TRANSVERSE-LONGITUDINAL, RIGID BRACING

REGISTERED PROFESSIONAL ENGINEER MARCIN WASAZNIK S-6612 STRUCTURAL STATE OF CALIFORNIA

ISAT
A Division of Tomarco Contractor Specialties
International Seismic Application Technology
14848 Northam Street, La Mirada, CA 90638
877-999-4728 (Toll Free) 714-523-0845 (fax)
www.isatsb.com

Rev. 3
06/26/18

Page
B38.1

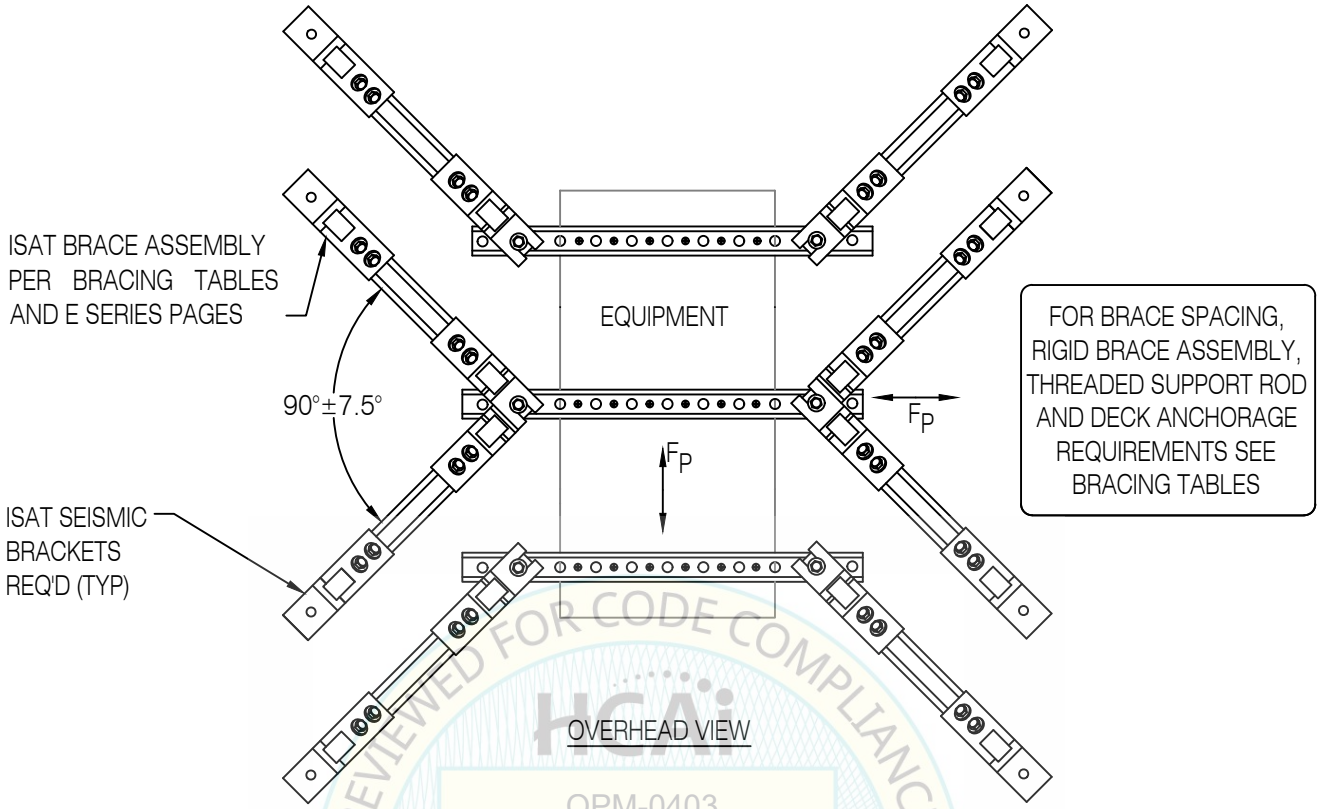

OVERHEAD VIEW

REVIEWED FOR CODE COMPLIANCE
HCAi
OPM-0403
BY: William Staehlin
DATE: 01-26-2024
CALIFORNIA BUILDING CODE, 2022

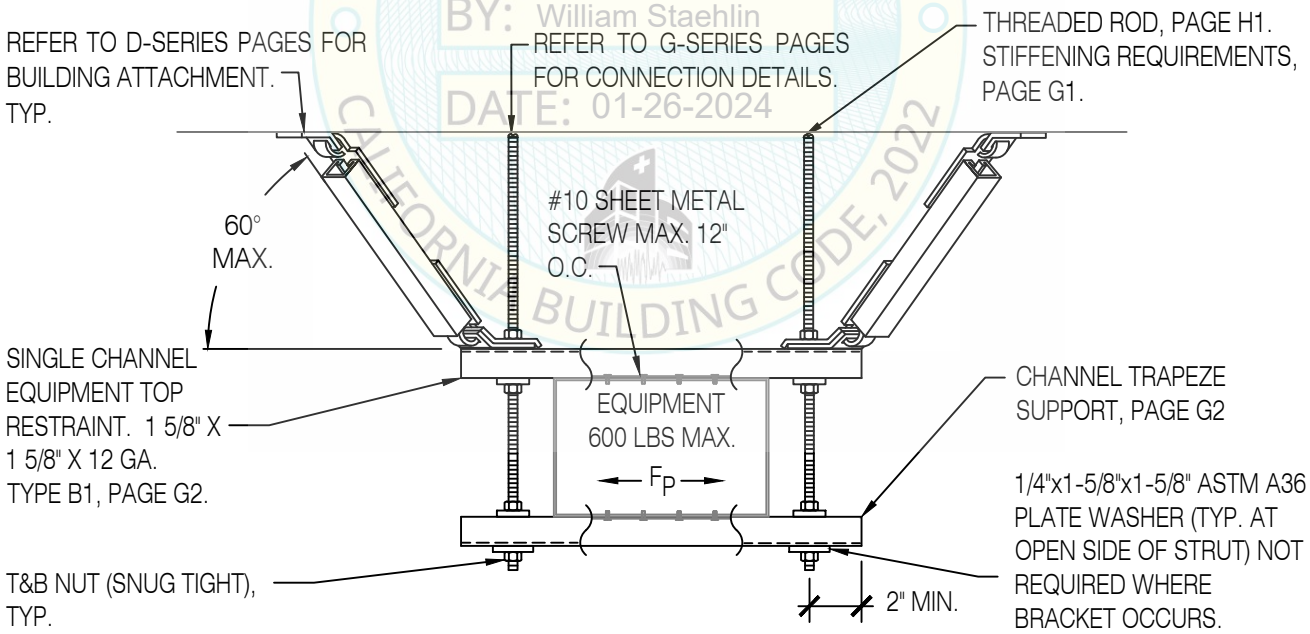

SECTION THRU MECHANICAL EQUIPMENT

6-ROD SUSPENDED EQUIPMENT
8-WAY SPLAYED TRANSVERSE-LONGITUDINAL, RIGID BRACING

REGISTERED PROFESSIONAL ENGINEER MARCIN WASAZNIK S-6612 STRUCTURAL STATE OF CALIFORNIA

ISAT
A Division of Tomarco Contractor Specialties
International Seismic Application Technology
14848 Northam Street, La Mirada, CA 90638
877-999-4728 (Toll Free) 714-523-0845 (fax)
www.isatsb.com

Rev. 3
06/26/18

Page
B38.2

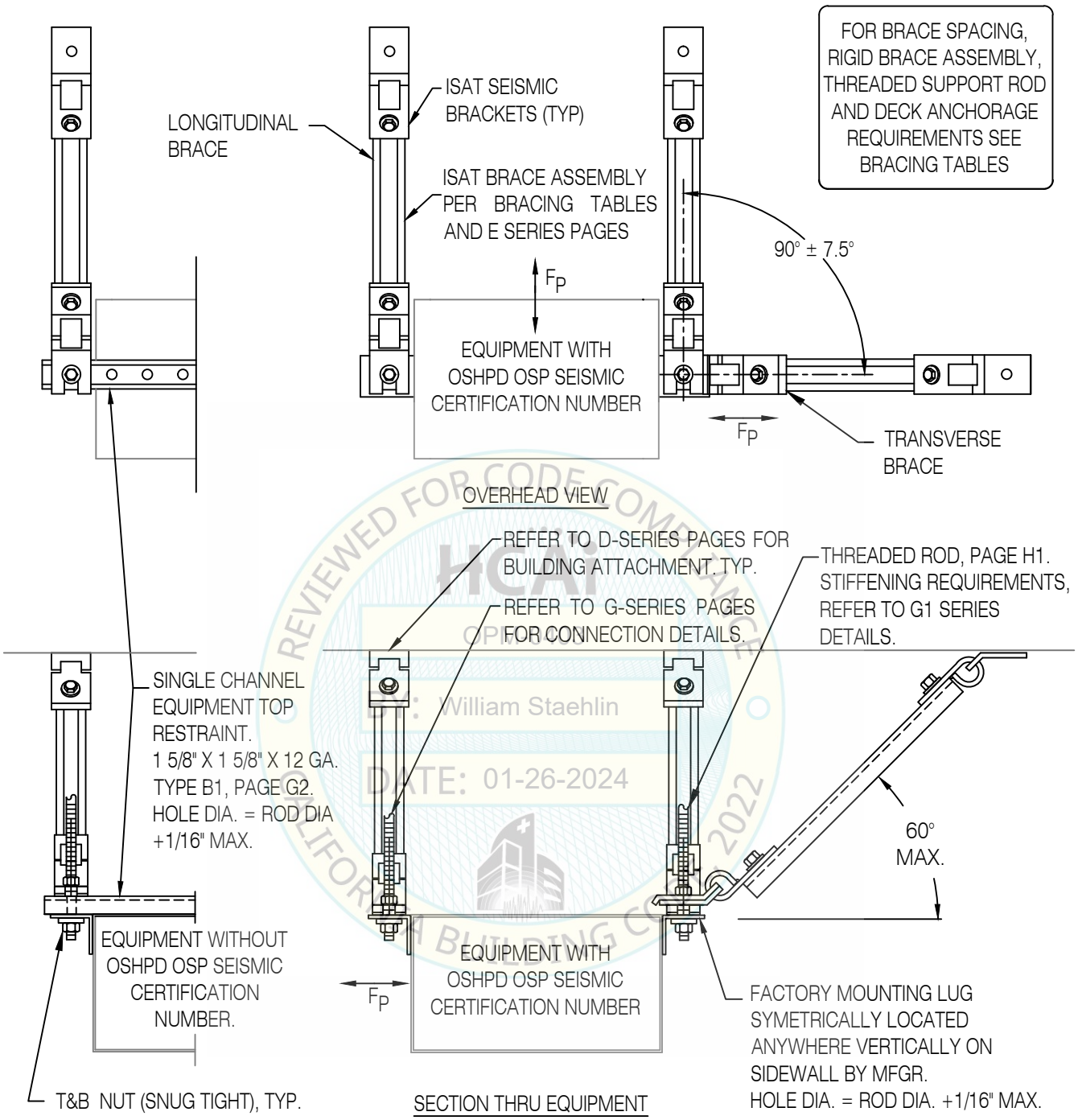

REVIEWED FOR CODE COMPLIANCE
HCAI
OPM-0403
BY: William Staehlin
DATE: 01-26-2024
CALIFORNIA BUILDING CODE 2022

MAXIMUM UNIT WEIGHT, 300 LBS.

MAXIMUM UNIT LENGTH 3 FEET. FOR UNITS EXCEEDING 3 FEET SEE PAGES B38.5 & B38.6

IN-LINE EQUIPMENT WITH FACTORY MOUNTING LUGS
3-WAY TRANSVERSE-LONGITUDINAL, RIGID BRACING

REGISTERED PROFESSIONAL ENGINEER MARCIN WASAZNIK S-6612 STRUCTURAL STATE OF CALIFORNIA

ISAT
A Division of Tomarco Contractor Specialties
International Seismic Application Technology
14848 Northam Street, La Mirada, CA 90638
877-999-4728 (Toll Free) 714-523-0845 (fax)
www.isatsb.com

Rev. 5
07/16/18

Page
B38.3

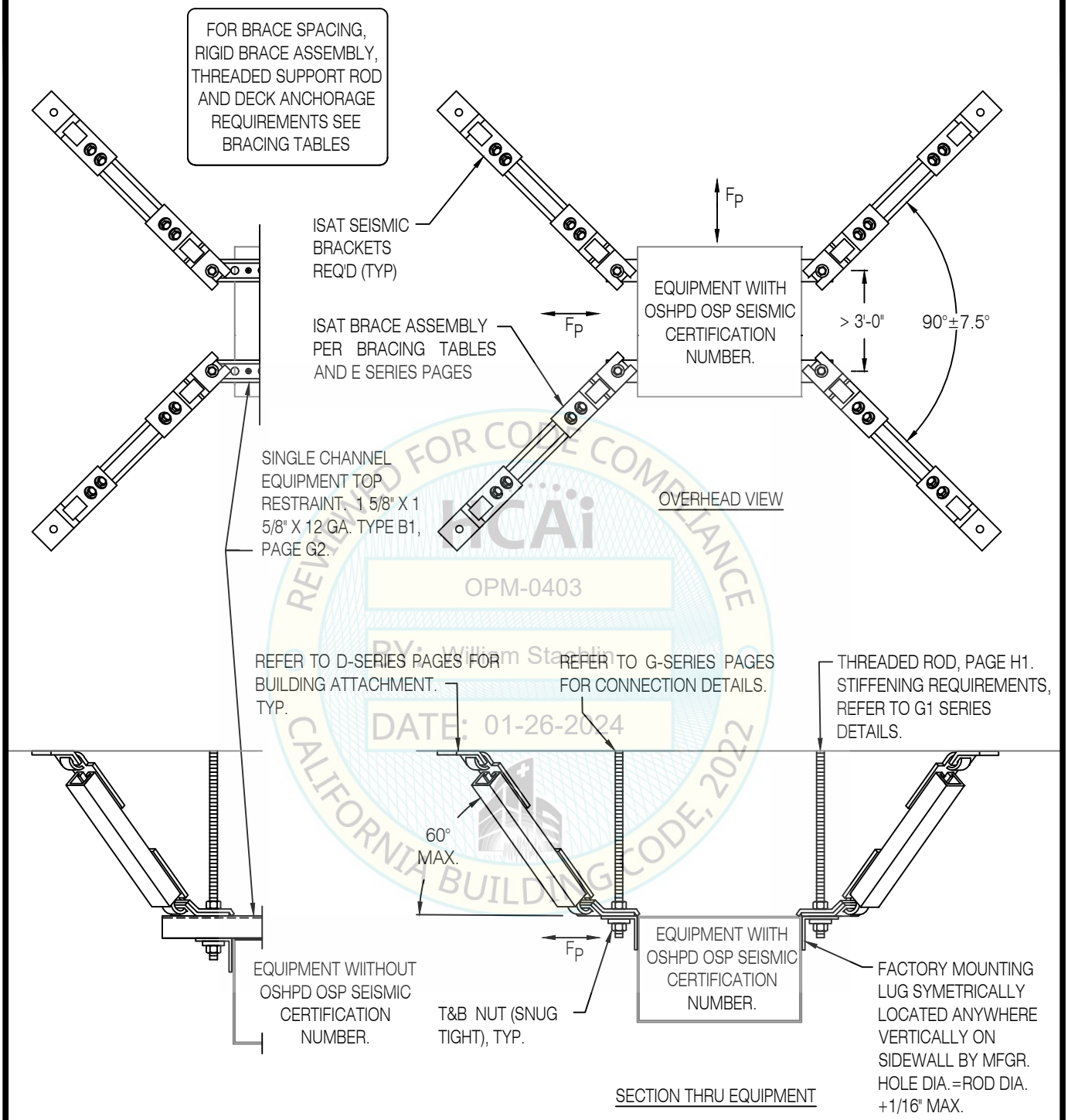

REVIEWED FOR CODE COMPLIANCE
ICAi
OPM-0403
BY: William Staehlin
DATE: 01-26-2024
CALIFORNIA BUILDING CODE, 2022

4-ROD SUSPENDED EQUIPMENT WITH FACTORY MOUNTING LUGS
4-WAY SPLAYED TRANSVERSE-LONGITUDINAL, RIGID BRACING

REGISTERED PROFESSIONAL ENGINEER MARCIN WASAZNIK S-6612 STRUCTURAL STATE OF CALIFORNIA

ISAT
A Division of Tomarco Contractor Specialties
International Seismic Application Technology
14848 Northam Street, La Mirada, CA 90638
877-999-4728 (Toll Free) 714-523-0845 (fax)
www.isatsb.com

Rev. 5
07/16/18

Page
B38.4

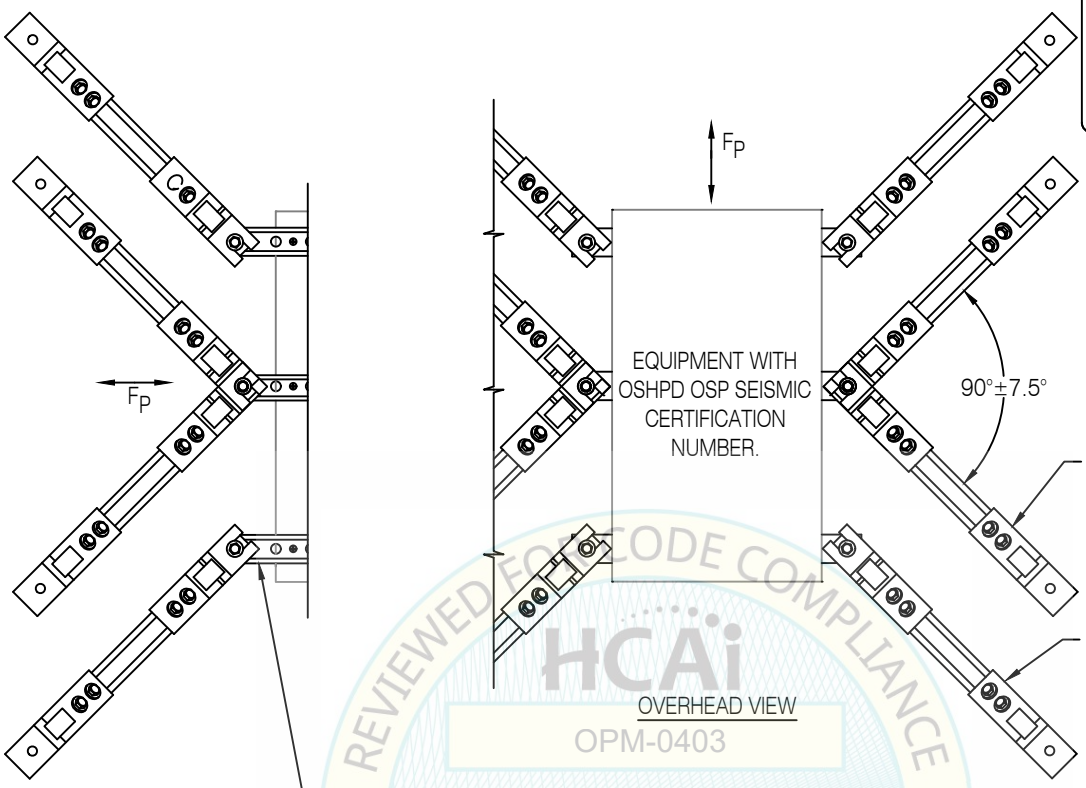

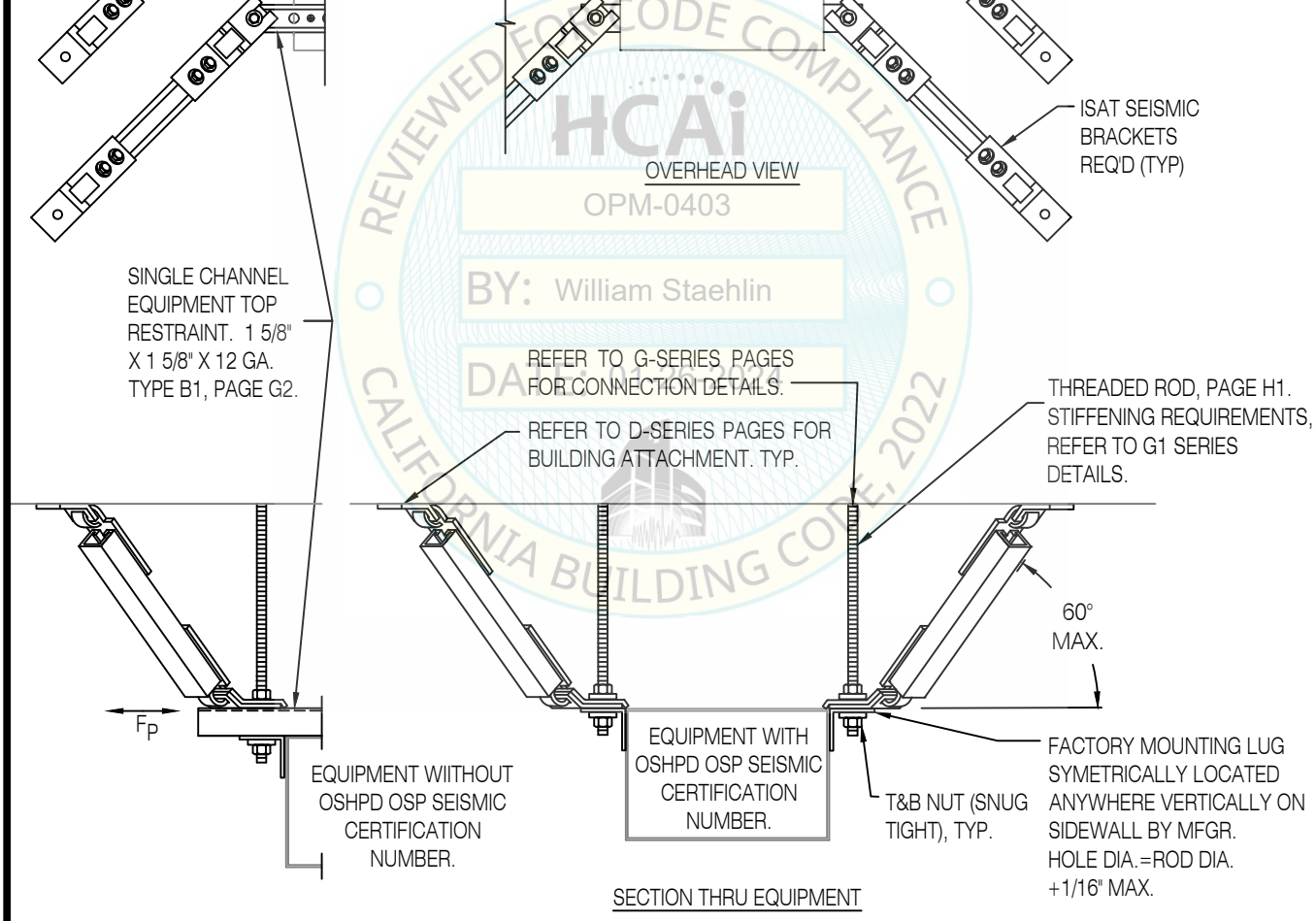

REVIEWED FOR CODE COMPLIANCE
HCAi
OPM-0403
BY: William Staehlin
DATE: 01/26/2024
CALIFORNIA BUILDING CODE, 2022

6-ROD SUSPENDED EQUIPMENT
8-WAY SPLAYED TRANSVERSE-LONGITUDINAL, RIGID BRACING

REGISTERED PROFESSIONAL ENGINEER MARCIN WASAZNIK S-6612 STRUCTURAL STATE OF CALIFORNIA

ISAT
A Division of Tomarco Contractor Specialties

International Seismic Application Technology
14848 Northam Street, La Mirada, CA 90638
877-999-4728 (Toll Free) 714-523-0845 (fax)
www.isatsb.com

Rev. 5
07/16/18

Page
B38.5

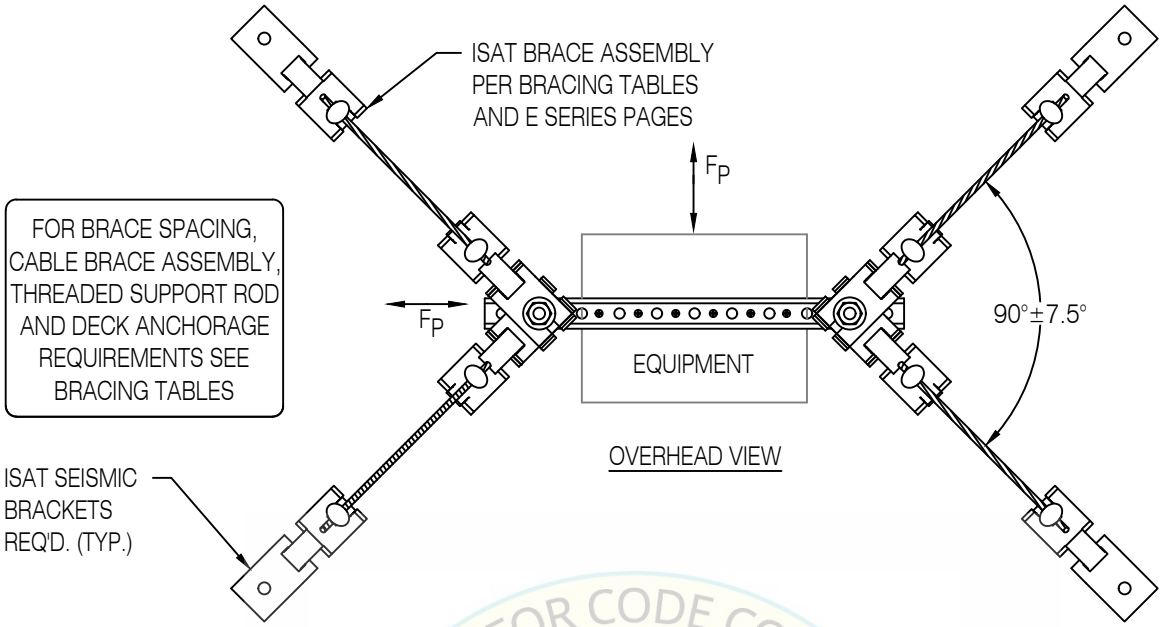

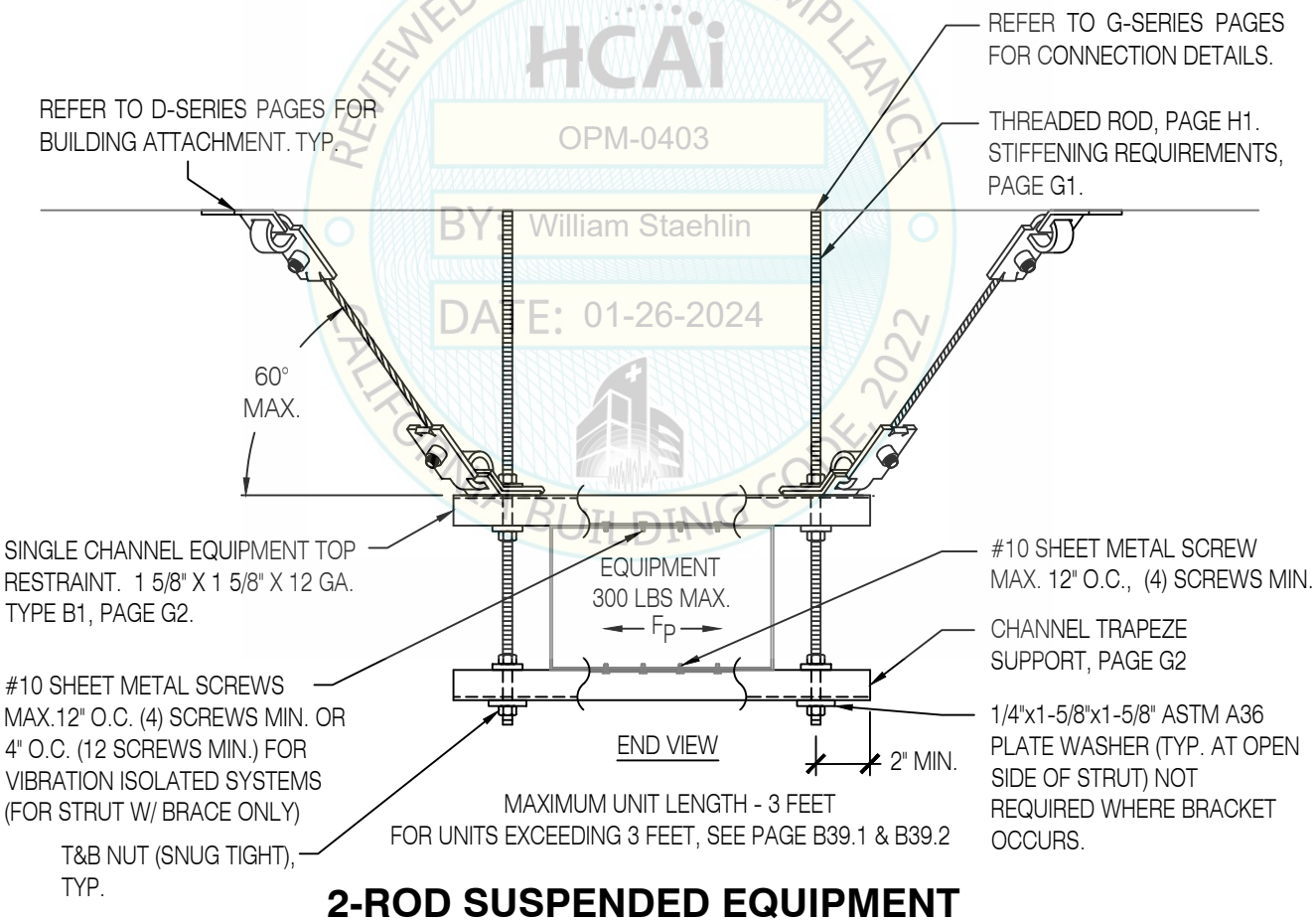

REVIEWED FOR CODE COMPLIANCE
HCAi
OPM-0403
BY: William Staehlin
DATE: 01-26-2024
CALIFORNIA BUILDING CODE 2022

2-ROD SUSPENDED EQUIPMENT
4-WAY SPLAYED TRANSVERSE-LONGITUDINAL, CABLE BRACING

REGISTERED PROFESSIONAL ENGINEER MARCIN WASAZNIK S-6612 STRUCTURAL STATE OF CALIFORNIA

ISAT
A Division of Tomarco Contractor Specialties

International Seismic Application Technology
14848 Northam Street, La Mirada, CA 90638
877-999-4728 (Toll Free) 714-523-0845 (fax)
www.isatsb.com

Rev. 4
06/26/18

Page
B39.0

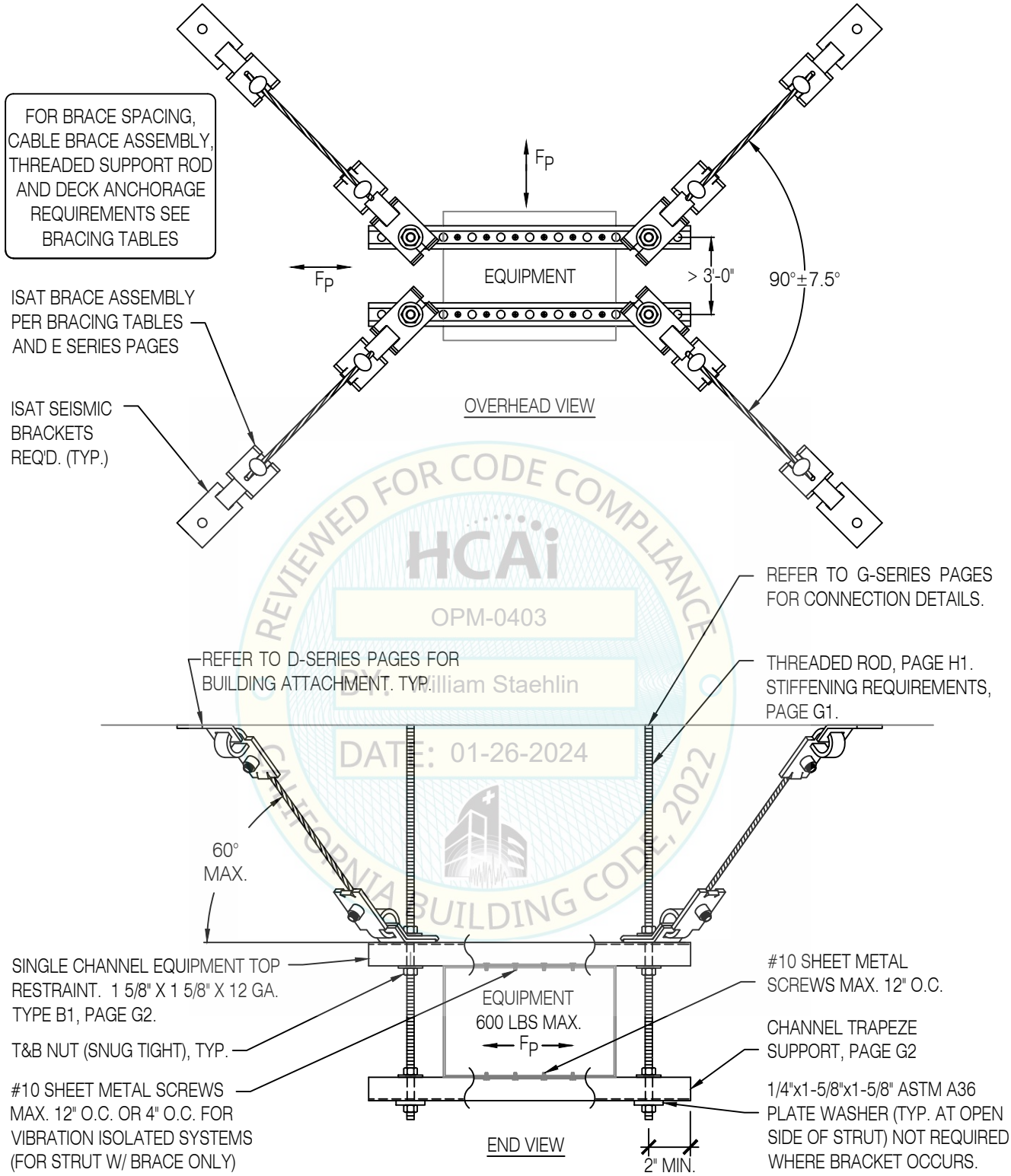

REVIEWED FOR CODE COMPLIANCE
HCAi
OPM-0403
Dr. William Staehlin
DATE: 01-26-2024
CALIFORNIA BUILDING CODE, 2022

4-ROD SUSPENDED EQUIPMENT
4-WAY SPLAYED TRANSVERSE-LONGITUDINAL, CABLE BRACING

REGISTERED PROFESSIONAL ENGINEER MARCIN WASAZNIK S-6612 STRUCTURAL STATE OF CALIFORNIA

ISAT
A Division of Tomarco Contractor Specialties
International Seismic Application Technology
14848 Northam Street, La Mirada, CA 90638
877-999-4728 (Toll Free) 714-523-0845 (fax)
www.isatsb.com

Rev. 3
06/26/18

Page
B39.1

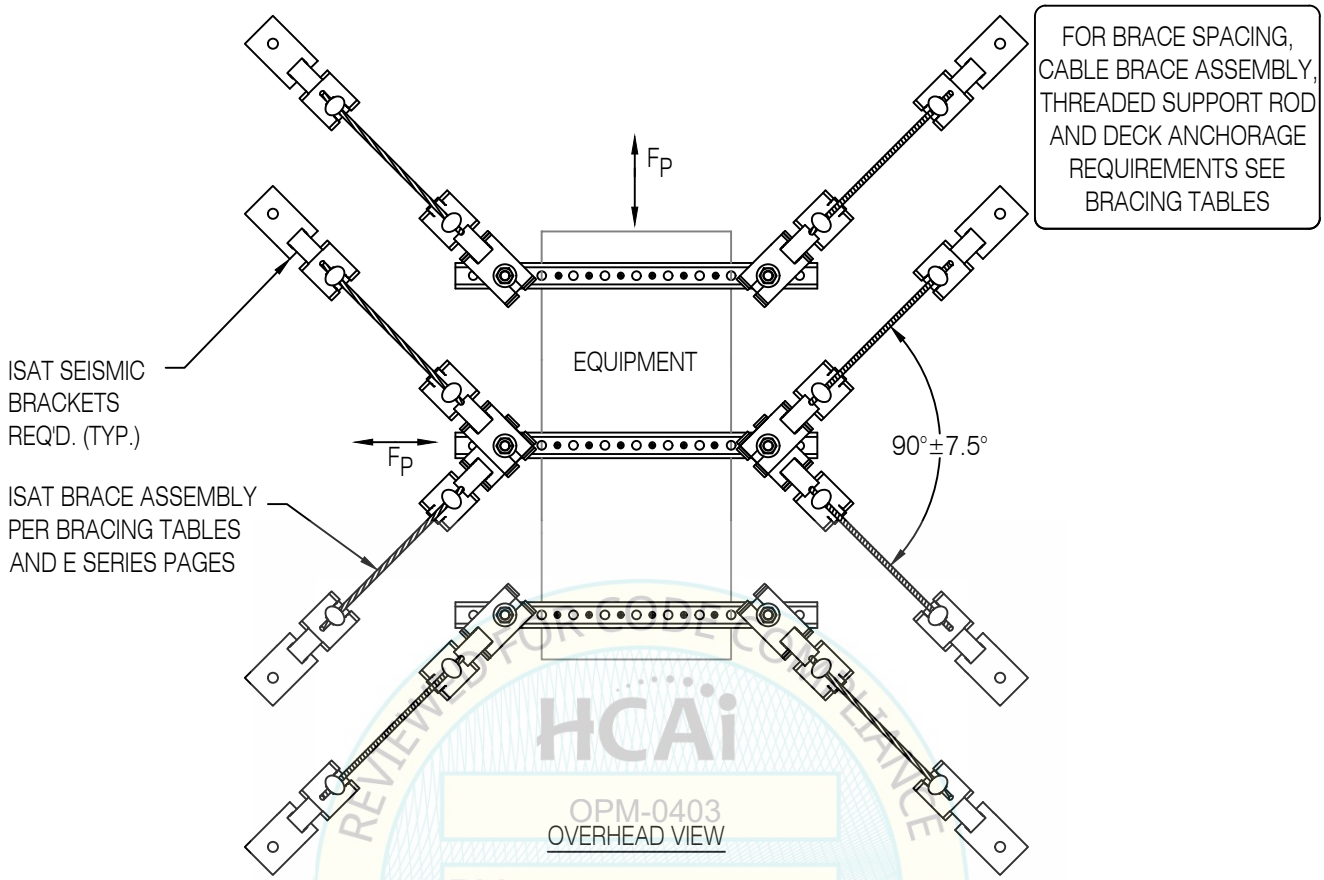

OVERHEAD VIEW

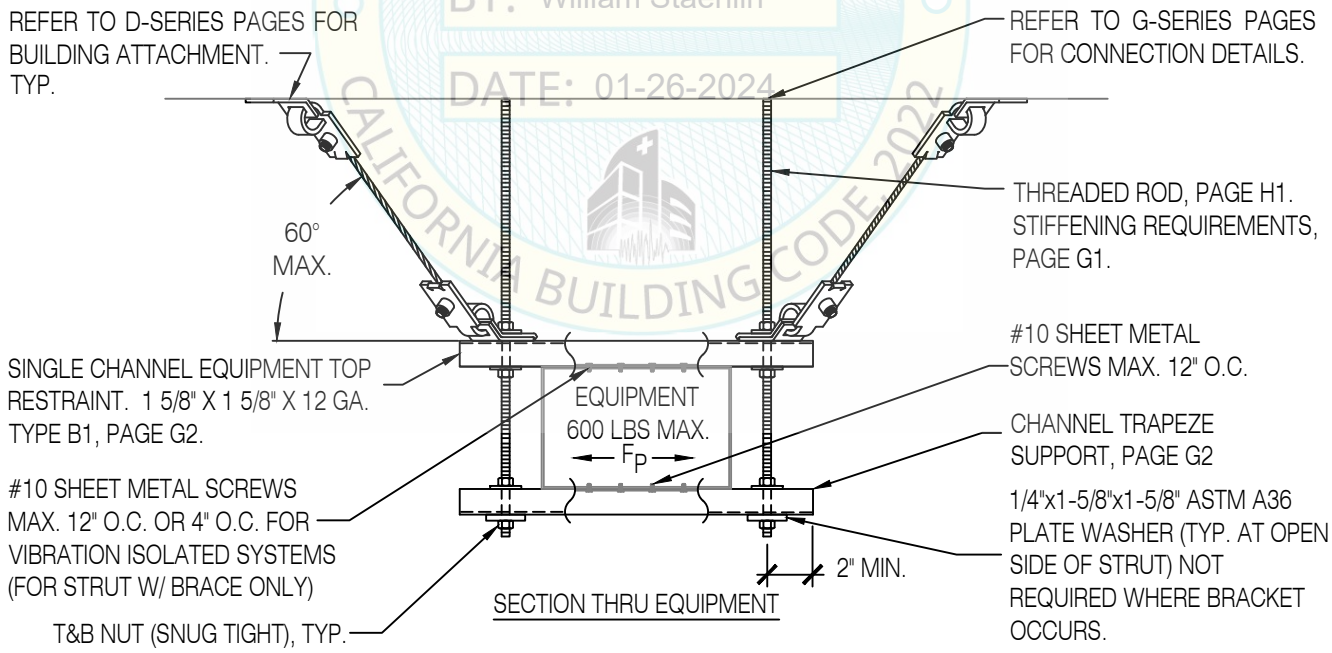

SECTION THRU EQUIPMENT

REVIEWED FOR CODE COMPLIANCE
HCAi
OPM-0403
BY: William Staehlin
DATE: 01-26-2024
CALIFORNIA BUILDING CODE 2022

6-ROD SUSPENDED EQUIPMENT
8-WAY SPLAYED TRANSVERSE-LONGITUDINAL, CABLE BRACING

REGISTERED PROFESSIONAL ENGINEER MARCIN WASAZNIK S-6612 STRUCTURAL STATE OF CALIFORNIA

ISAT
A Division of Tomarco Contractor Specialties
International Seismic Application Technology
14848 Northam Street, La Mirada, CA 90638
877-999-4728 (Toll Free) 714-523-0845 (fax)
www.isatsb.com

Rev. 3
06/26/18

Page
B39.2

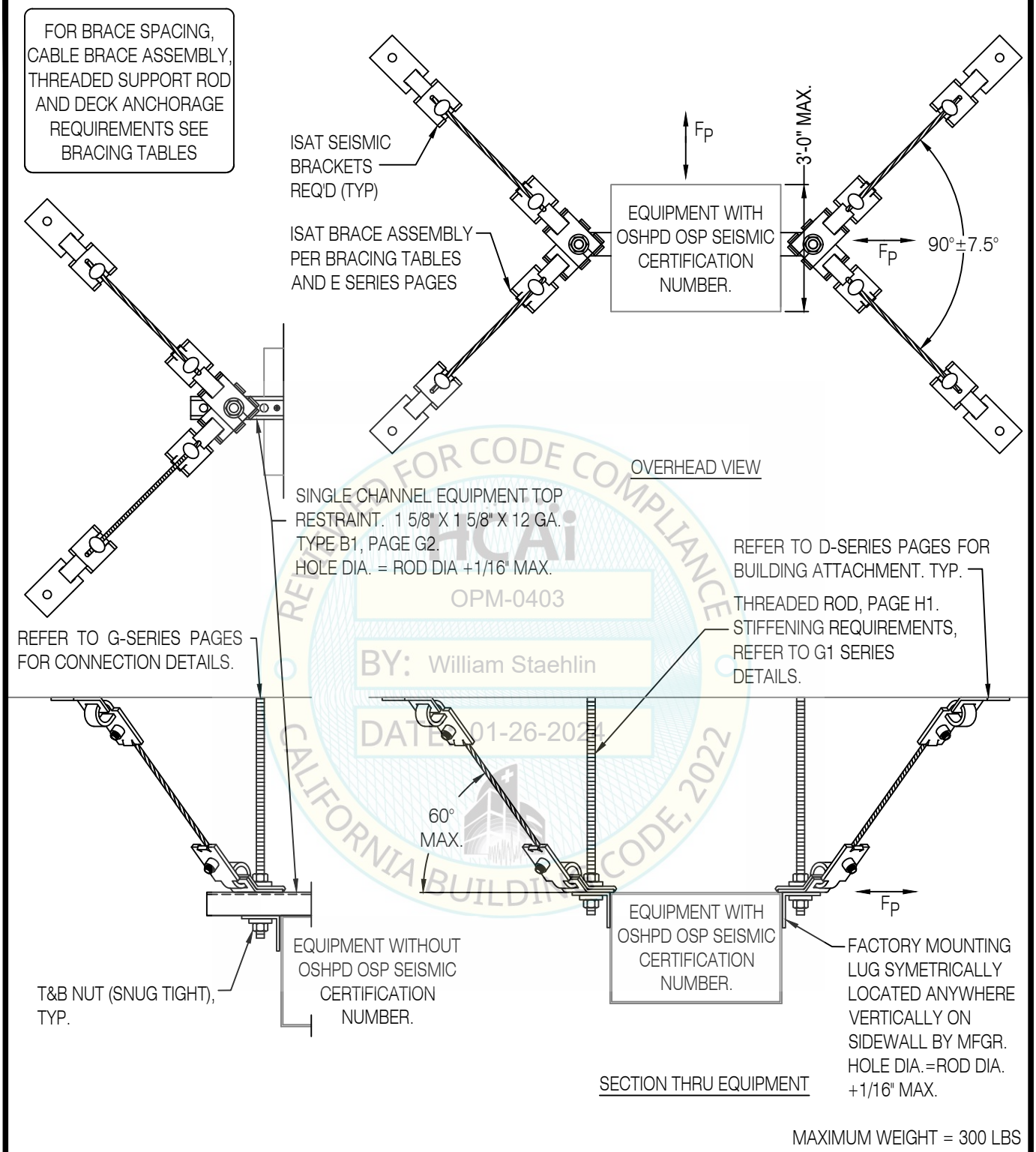

REVIEWED FOR CODE COMPLIANCE
ICAI
OPM-0403
BY: William Staehlin
DATE: 01-26-2024
CALIFORNIA BUILDING CODE, 2022

MAXIMUM WEIGHT = 300 LBS

2-ROD SUSPENDED EQUIPMENT
4-WAY SPLAYED TRANSVERSE-LONGITUDINAL, CABLE BRACING

REGISTERED PROFESSIONAL ENGINEER MARCIN WASAZNIK S-6612 STRUCTURAL STATE OF CALIFORNIA

ISAT
A Division of Tomarco Contractor Specialties
International Seismic Application Technology
14848 Northam Street, La Mirada, CA 90638
877-999-4728 (Toll Free) 714-523-0845 (fax)
www.isatsb.com

Rev. 4
09/12/18

Page
B39.5

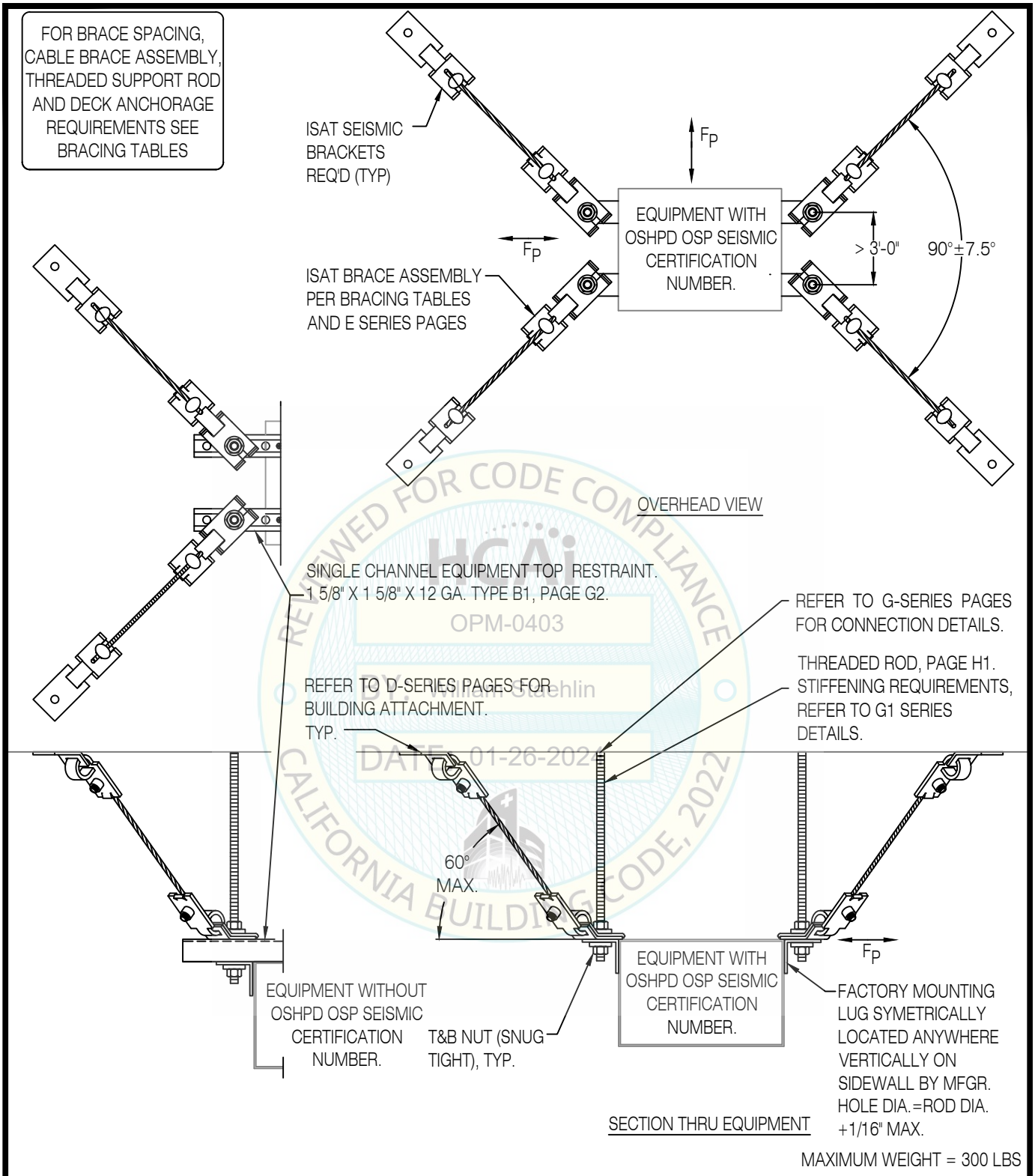

MAXIMUM WEIGHT = 300 LBS

REVIEWED FOR CODE COMPLIANCE
HCAi
OPM-0403
By: William Staehlin
DATE: 01-26-2024
CALIFORNIA BUILDING CODE, 2022

4-ROD SUSPENDED EQUIPMENT
4-WAY SPLAYED TRANSVERSE-LONGITUDINAL, CABLE BRACING

REGISTERED PROFESSIONAL ENGINEER MARCIN WASAZNIK S-6612 STRUCTURAL STATE OF CALIFORNIA

ISAT
A Division of Tomarco Contractor Specialties
International Seismic Application Technology
14848 Northam Street, La Mirada, CA 90638
877-999-4728 (Toll Free) 714-523-0845 (fax)
www.isatsb.com

Rev. 4
07/16/18

Page
B39.6

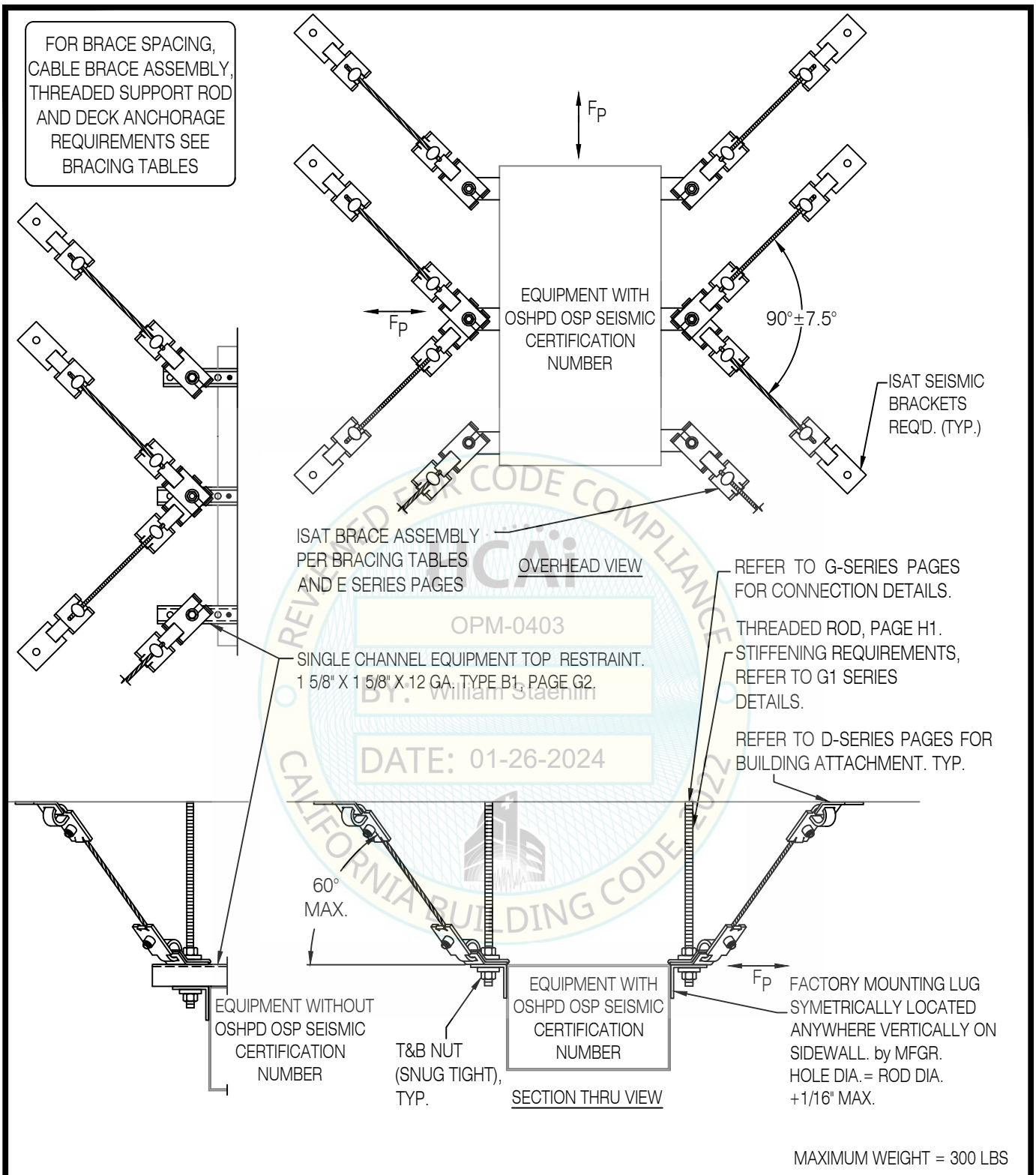

REVIEWED FOR CODE COMPLIANCE
OPM-0403
BY: William Staehlin
DATE: 01-26-2024
CALIFORNIA BUILDING CODE 2022

MAXIMUM WEIGHT = 300 LBS

6-ROD SUSPENDED EQUIPMENT
8-WAY SPLAYED TRANSVERSE-LONGITUDINAL, CABLE BRACING

REGISTERED PROFESSIONAL ENGINEER MARCIN WASAZNIK S-6612 STRUCTURAL STATE OF CALIFORNIA

ISAT
A Division of Tomarco Contractor Specialties
International Seismic Application Technology
14848 Northam Street, La Mirada, CA 90638
877-999-4728 (Toll Free) 714-523-0845 (fax)
www.isatsb.com

Rev. 4
07/16/18

Page
B39.7

FOR BRACE SPACING, RIGID BRACE ASSEMBLY, THREADED SUPPORT ROD AND DECK ANCHORAGE REQUIREMENTS SEE BRACING TABLES

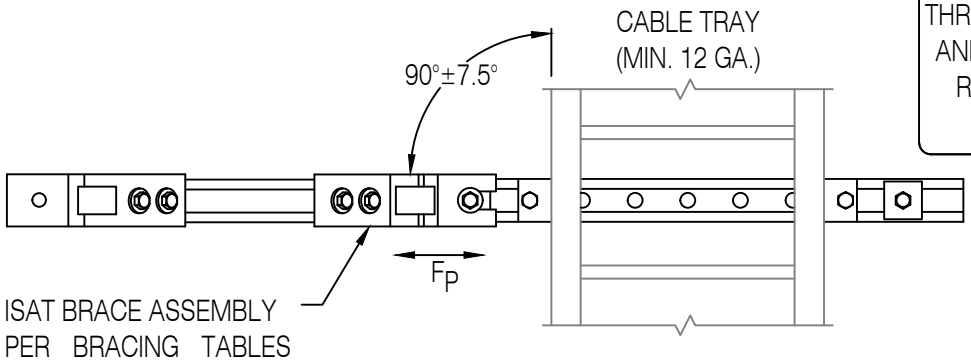

OVERHEAD VIEW

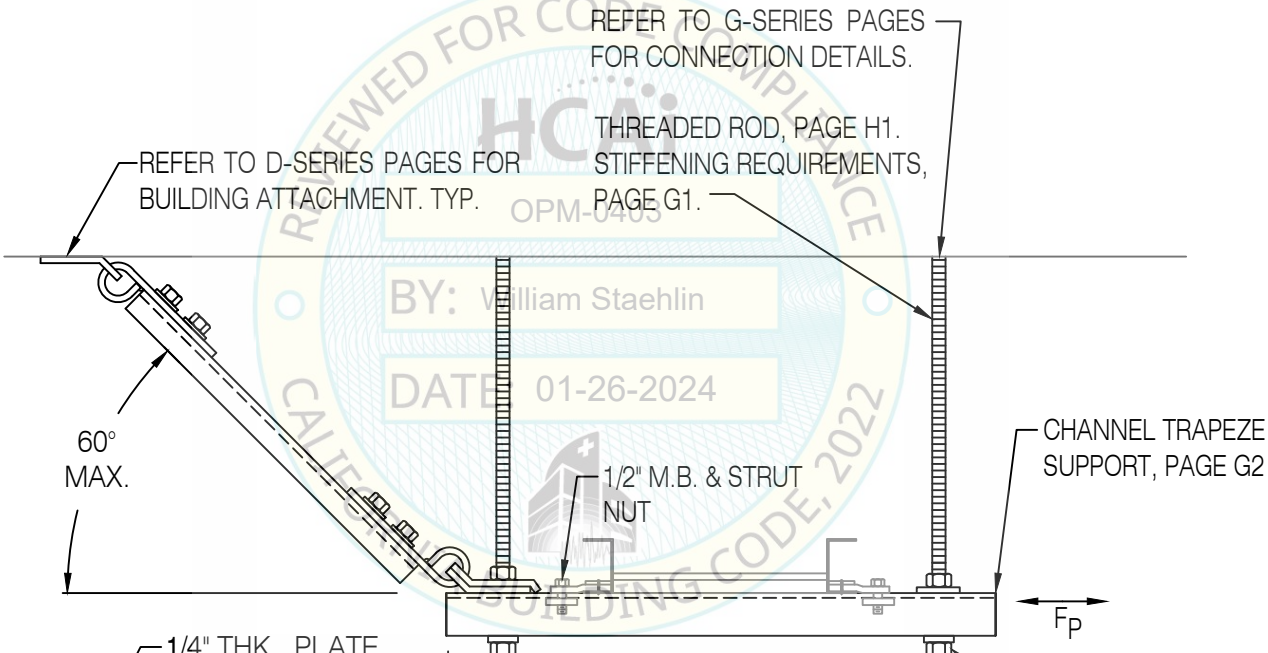

SECTION THRU CABLE TRAY

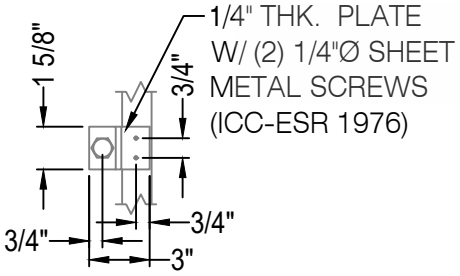

PLAN

REVIEWED FOR CODE COMPLIANCE
HCAI
OPM-0403
BY: William Staehlin
DATE: 01-26-2024
CALIFORNIA BUILDING CODE, 2022

CABLE TRAY
1-WAY TRANSVERSE, RIGID BRACING

REGISTERED PROFESSIONAL ENGINEER
MARCIN WASAZNIK
S-6612
STRUCTURAL
STATE OF CALIFORNIA

ISAT
A Division of Tomarco Contractor Specialties

International Seismic Application Technology
14848 Northam Street, La Mirada, CA 90638
877-999-4728 (Toll Free) 714-523-0845 (fax)
www.isatsb.com

Rev. 2
07/03/18

Page
B41.0

FOR BRACE SPACING, RIGID BRACE ASSEMBLY, THREADED SUPPORT ROD AND DECK ANCHORAGE REQUIREMENTS SEE BRACING TABLES

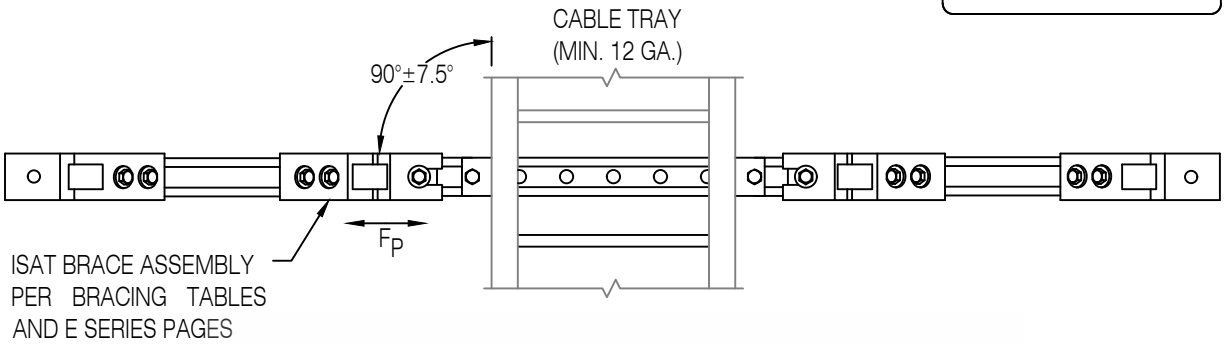

OVERHEAD VIEW

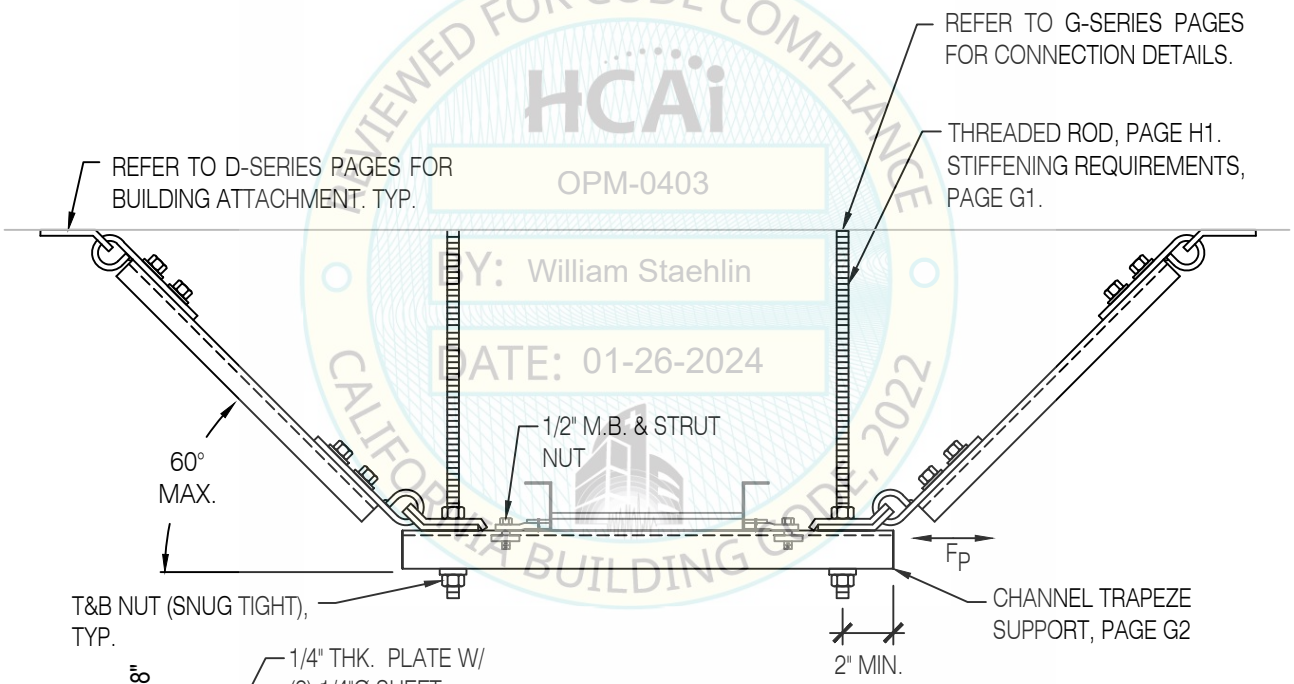

SECTION THRU CABLE TRAY

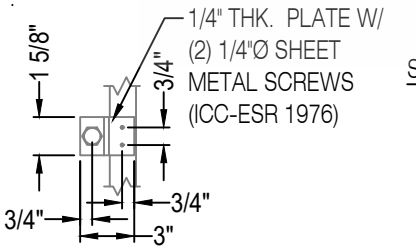

PLAN

REVIEWED FOR CODE COMPLIANCE
HCAi
OPM-0403
BY: William Staehlin
DATE: 01-26-2024
CALIFORNIA BUILDING CODE, 2022

CABLE TRAY
2-WAY TRANSVERSE, RIGID BRACING

REGISTERED PROFESSIONAL ENGINEER
MARCIN WASAZNIK
S-6612
STRUCTURAL
STATE OF CALIFORNIA

ISAT
A Division of Tomarco Contractor Specialties

International Seismic Application Technology
14848 Northam Street, La Mirada, CA 90638
877-999-4728 (Toll Free) 714-523-0845 (fax)
www.isatsb.com

Rev. 2
07/03/18

Page
B41.1

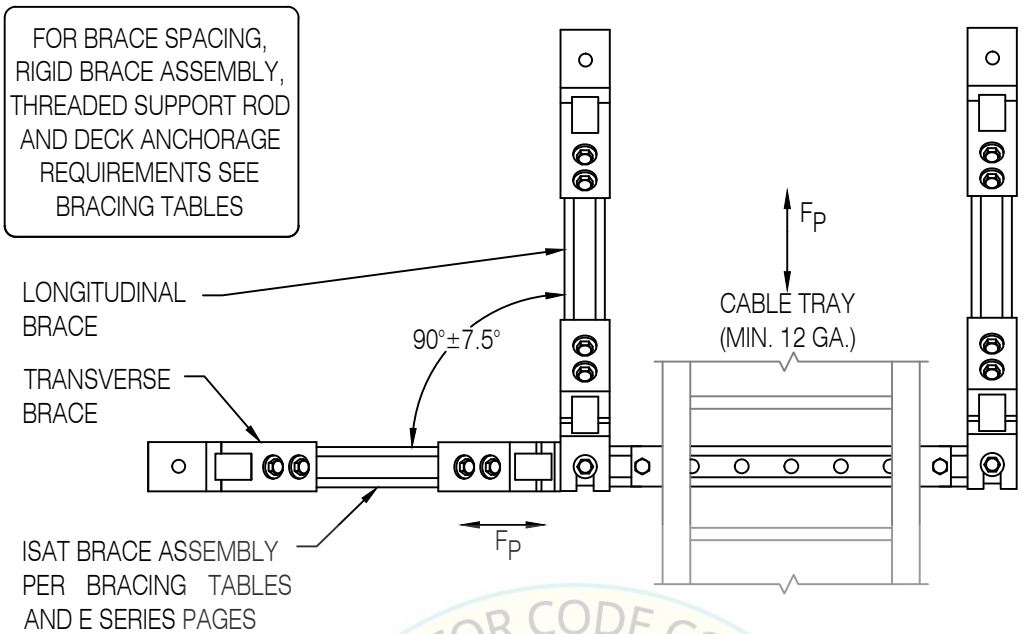

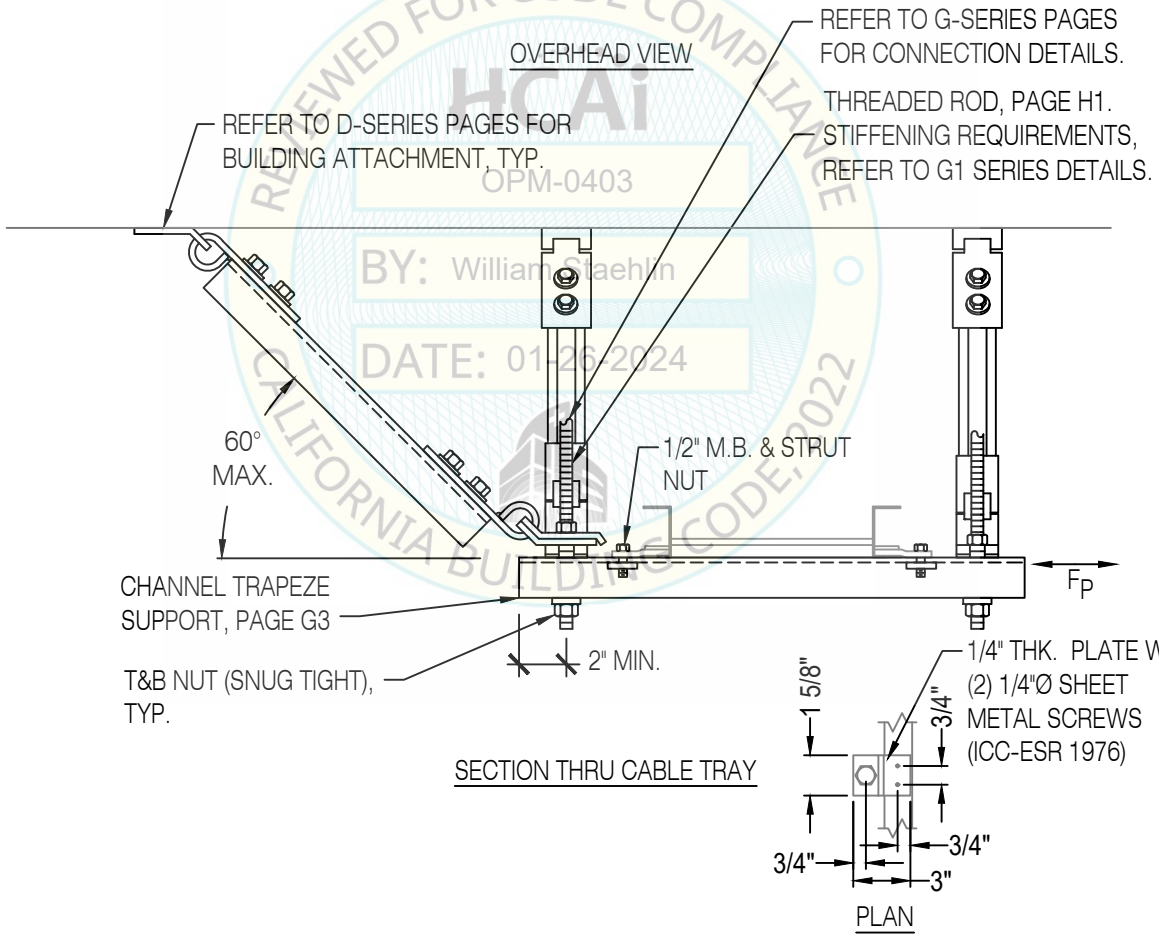

REVIEWED FOR CODE COMPLIANCE
HCAi
OPM-0403
BY: William Staehlin
DATE: 01-26-2024
CALIFORNIA BUILDING CODE, 2022

CABLE TRAY
3-WAY TRANSVERSE-LONGITUDINAL, RIGID BRACING

REGISTERED PROFESSIONAL ENGINEER
MARCIN WASAZNIK
S-6612
STRUCTURAL
STATE OF CALIFORNIA

ISAT
A Division of Tomarco Contractor Specialties

International Seismic Application Technology
14848 Northam Street, La Mirada, CA 90638
877-999-4728 (Toll Free) 714-523-0845 (fax)
www.isatsb.com

Rev. 3
08/28/23

Page
B41.2

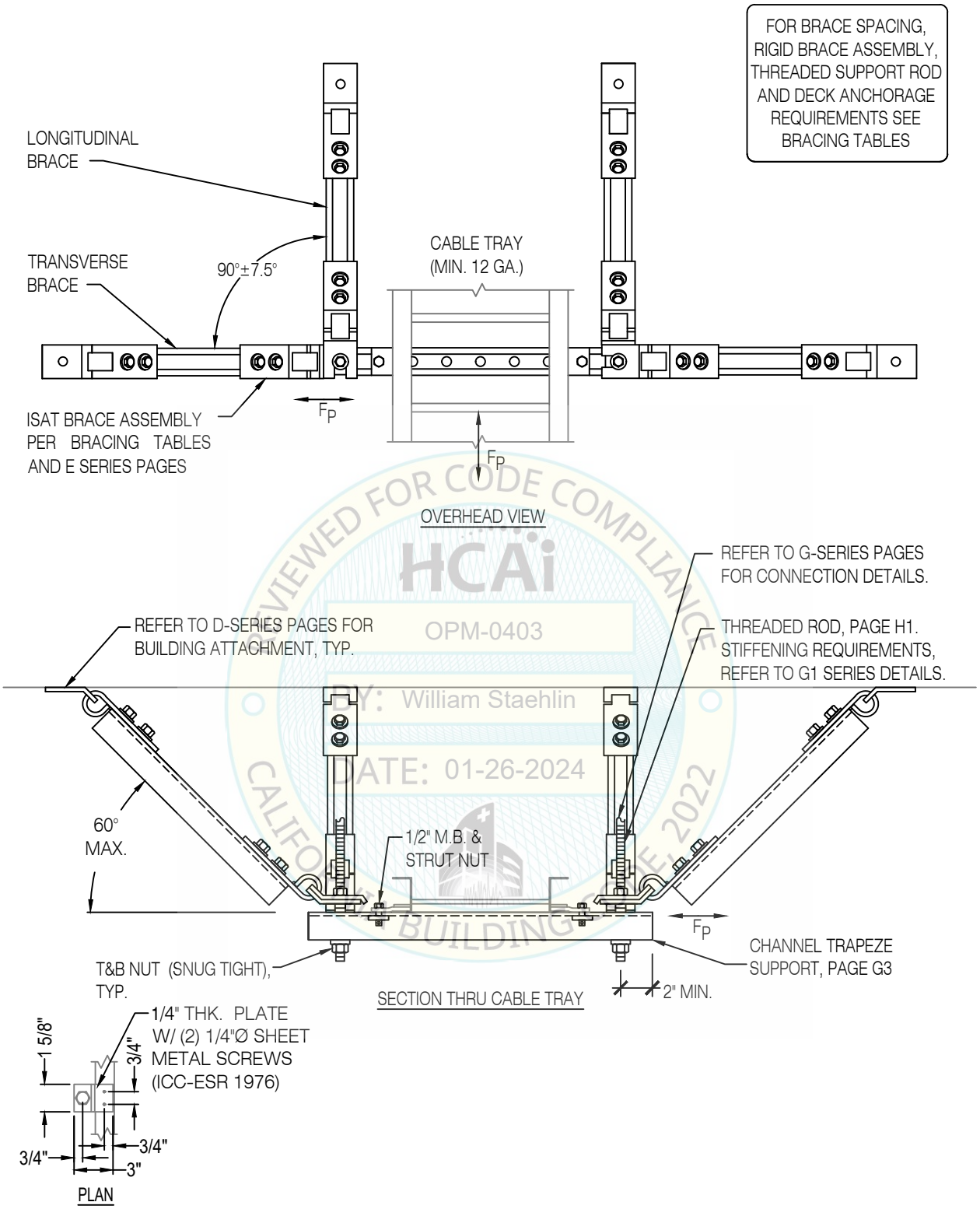

REVIEWED FOR CODE COMPLIANCE
HCAi
OPM-0403
BY: William Staehlin
DATE: 01-26-2024
CALIFORNIA BUILDING CODE 2022

CABLE TRAY
4-WAY TRANSVERSE-LONGITUDINAL, RIGID BRACING

REGISTERED PROFESSIONAL ENGINEER MARCIN WASAZNIK S-6612 STRUCTURAL STATE OF CALIFORNIA

ISAT
A Division of Tomarco Contractor Specialties
International Seismic Application Technology
14848 Northam Street, La Mirada, CA 90638
877-999-4728 (Toll Free) 714-523-0845 (fax)
www.isatsb.com

Rev. 3
08/28/23

Page
B41.3

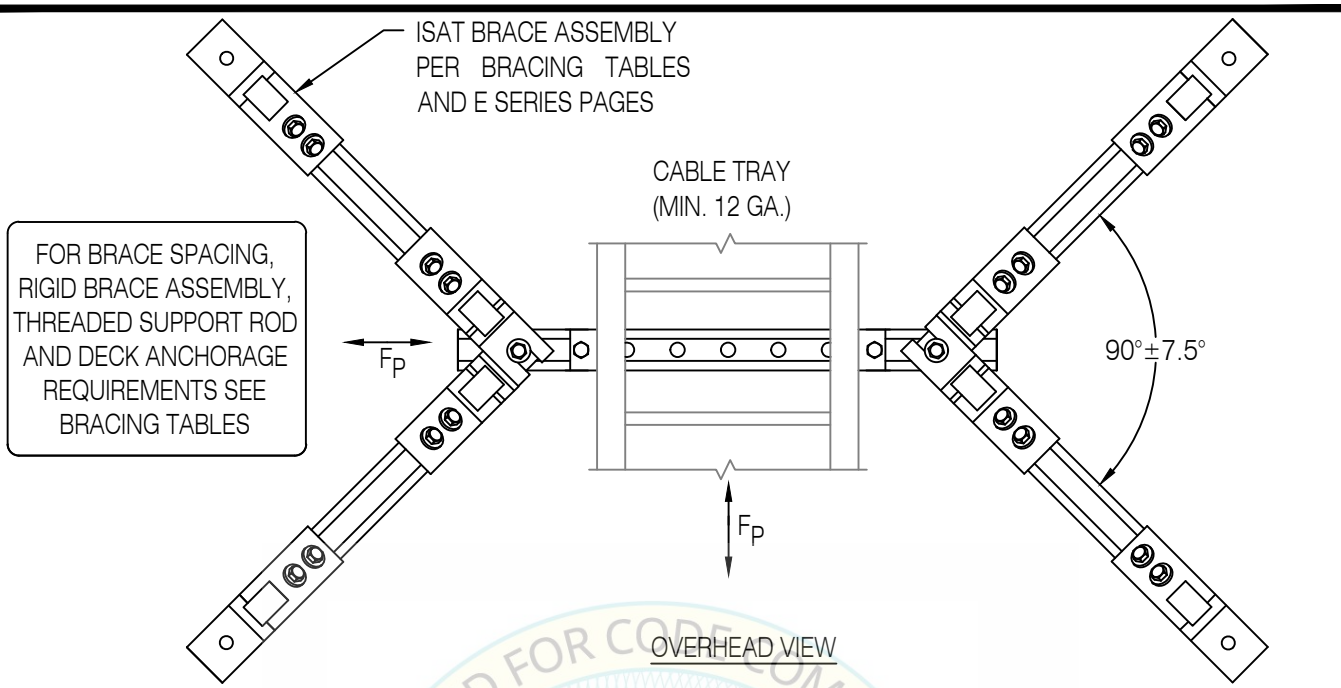

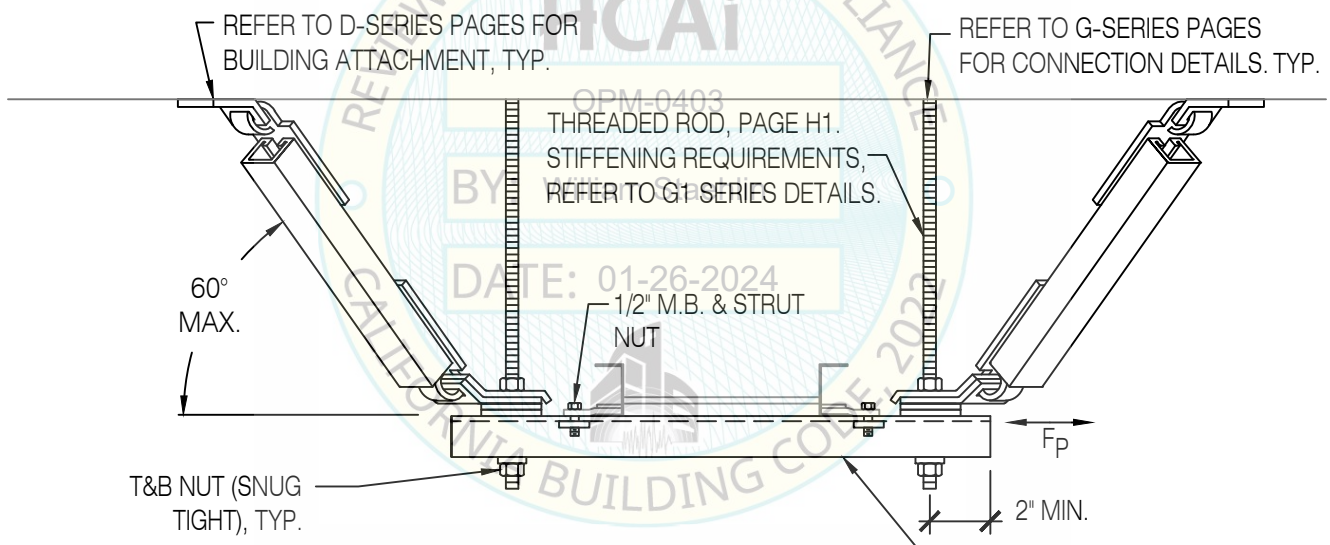

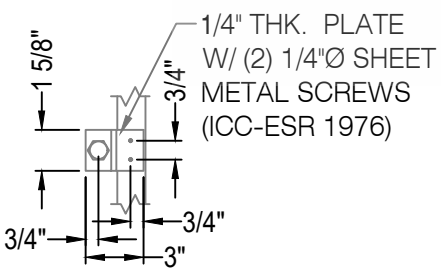

PLAN

REVIEWED FOR CODE COMPLIANCE BY HCAi
OPM-0403
BY: William Staehlin
DATE: 01-26-2024
CALIFORNIA BUILDING CODE 2022

CABLE TRAY
4-WAY SPLAYED TRANSVERSE-LONGITUDINAL, RIGID BRACING

REGISTERED PROFESSIONAL ENGINEER
MARCIN WASAZNIK
S 6612
STRUCTURAL
STATE OF CALIFORNIA

ISAT
A Division of Tomarco Contractor Specialties

International Seismic Application Technology
14848 Northam Street, La Mirada, CA 90638
877-999-4728 (Toll Free) 714-523-0845 (fax)
www.isatsb.com

Rev. 3
08/28/23

Page
B41.4

FOR BRACE SPACING, CABLE BRACE ASSEMBLY, THREADED SUPPORT ROD AND DECK ANCHORAGE REQUIREMENTS SEE BRACING TABLES

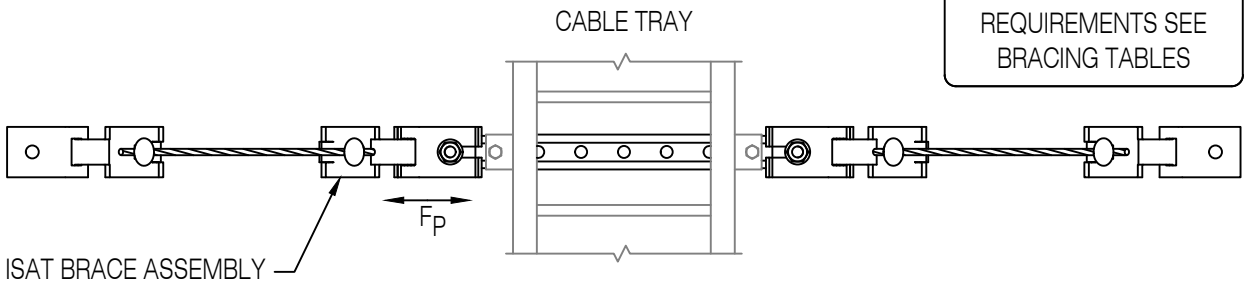

OVERHEAD VIEW

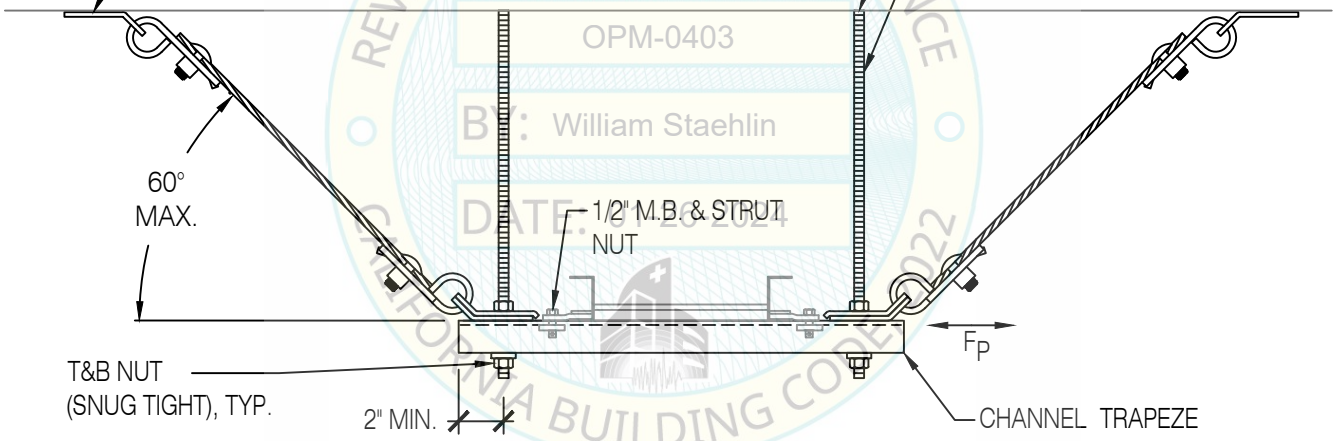

SECTION THRU CABLE TRAY

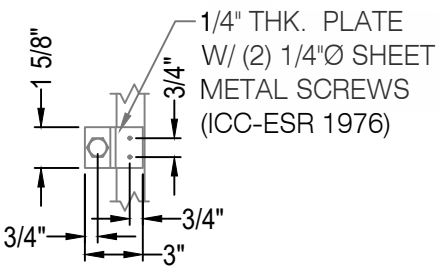

PLAN

REVIEWED FOR CODE COMPLIANCE
HCAi
OPM-0403
BY: William Staehlin
DATE: 01/26/2024
CALIFORNIA BUILDING CODE 2022

CABLE TRAY
2-WAY TRANSVERSE, CABLE BRACING

REGISTERED PROFESSIONAL ENGINEER MARCIN WASAZNIK S-6612 STRUCTURAL STATE OF CALIFORNIA

ISAT
A Division of Tomarco Contractor Specialties

International Seismic Application Technology
14848 Northam Street, La Mirada, CA 90638
877-999-4728 (Toll Free) 714-523-0845 (fax)
www.isatsb.com

Rev. 2
07/03/18

Page
B43.0

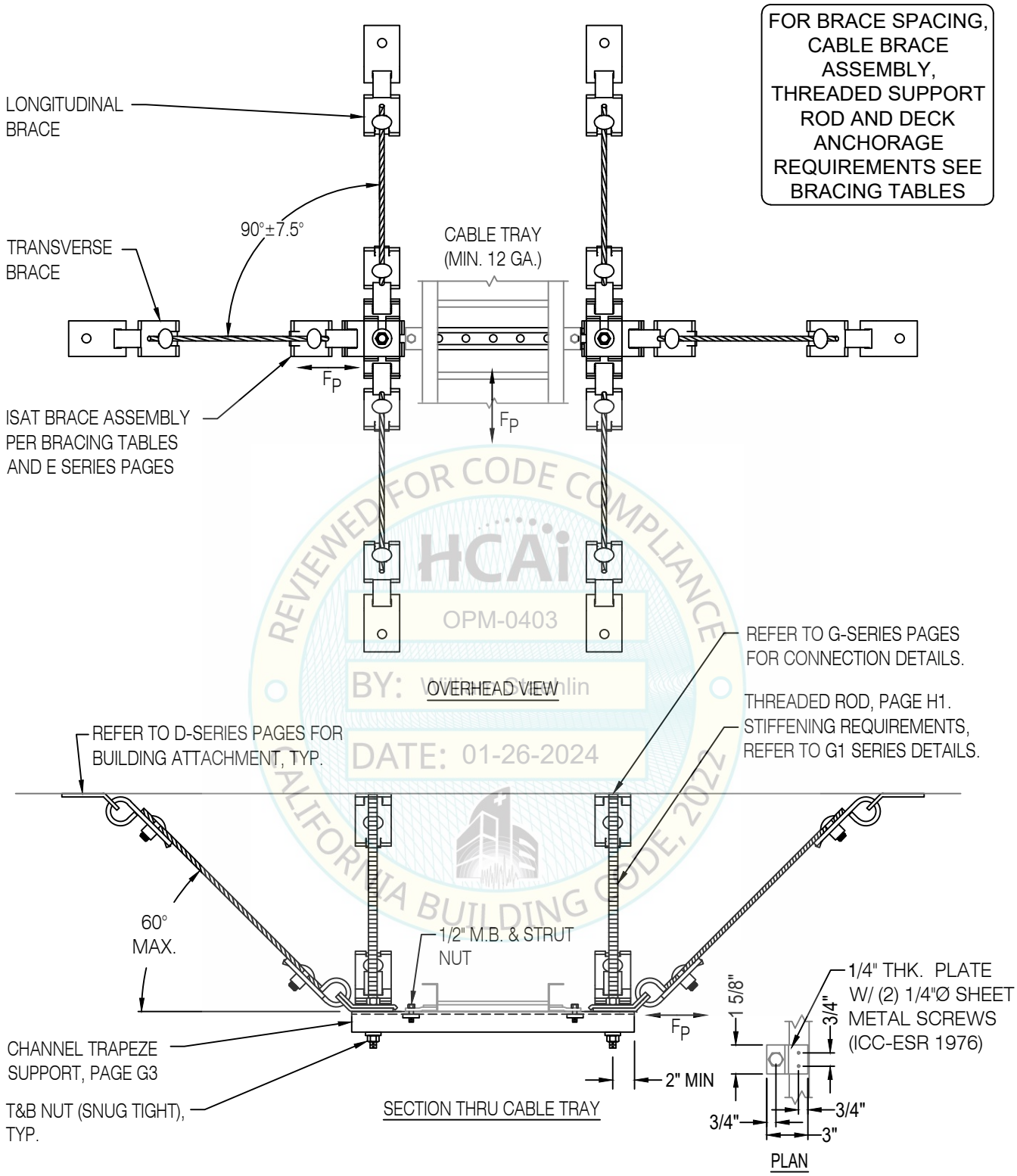

REVIEWED FOR CODE COMPLIANCE
HCAi
OPM-0403
BY: William Staehlin
DATE: 01-26-2024
CALIFORNIA BUILDING CODE, 2022

CABLE TRAY
6-WAY TRANSVERSE-LONGITUDINAL, CABLE BRACING

REGISTERED PROFESSIONAL ENGINEER MARCIN WASAZNIK S-6612 STRUCTURAL STATE OF CALIFORNIA

ISAT
A Division of Tomarco Contractor Specialties
International Seismic Application Technology
14848 Northam Street, La Mirada, CA 90638
877-999-4728 (Toll Free) 714-523-0845 (fax)
www.isatsb.com

Rev. 3
08/29/23

Page
B43.1

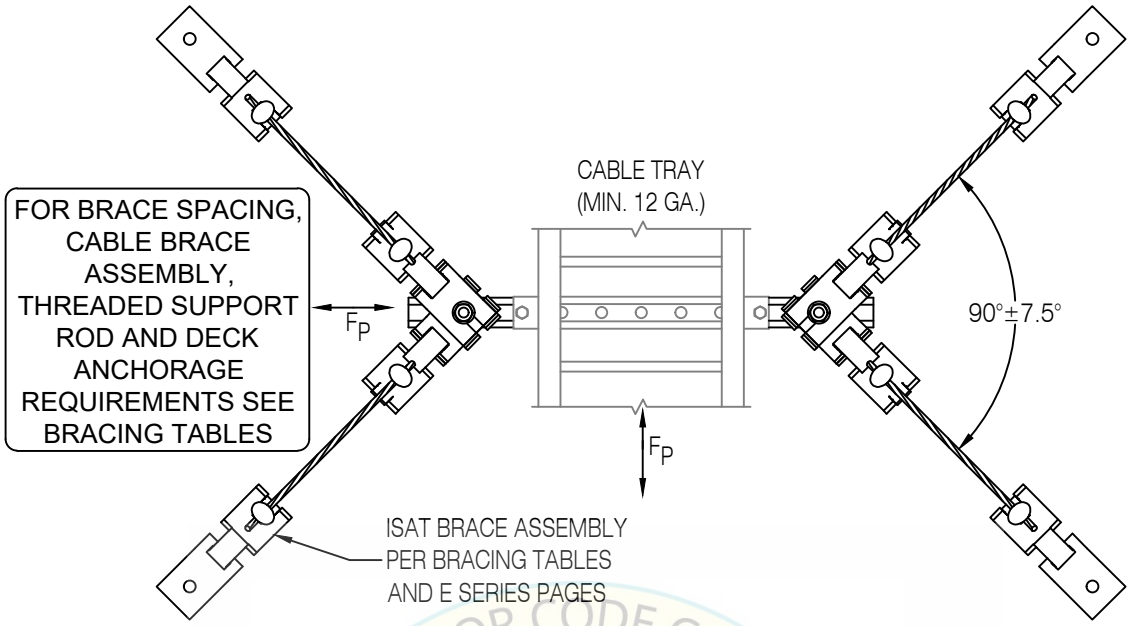

OVERHEAD VIEW

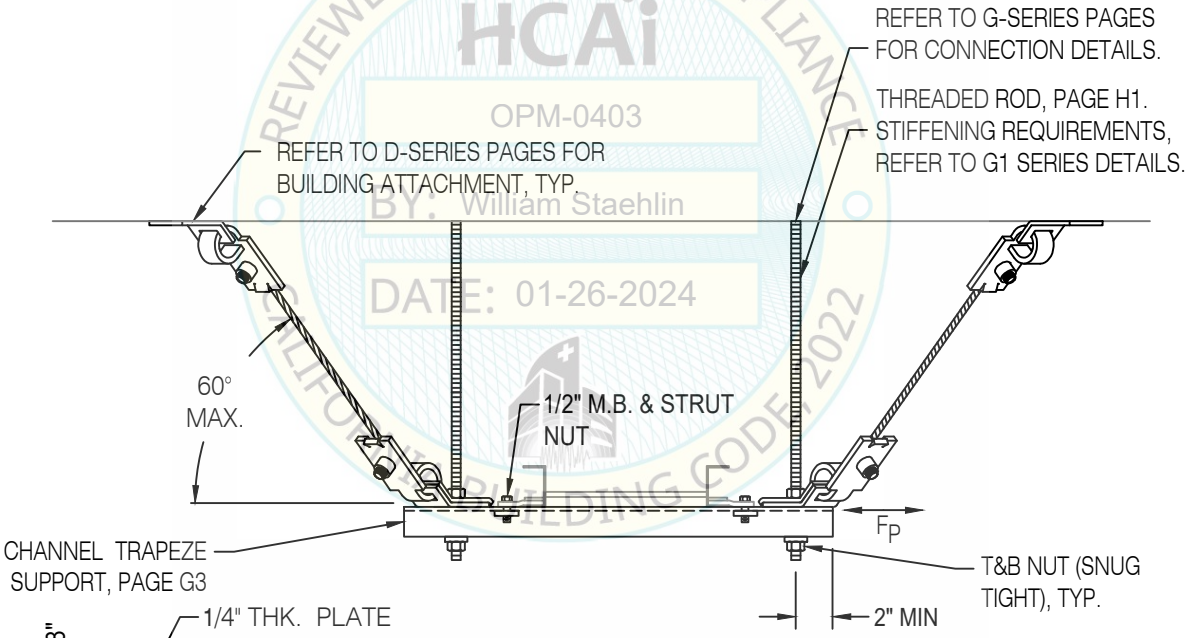

SECTION THRU CABLE TRAY

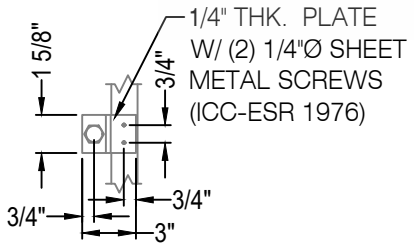

PLAN

REVIEWED FOR CODE COMPLIANCE
HCAi
OPM-0403
BY: William Staehlin
DATE: 01-26-2024
CALIFORNIA BUILDING CODE 2022

CABLE TRAY
4-WAY SPLAYED, CABLE BRACING

REGISTERED PROFESSIONAL ENGINEER
MARCIN WASAZNIK
S 6612
STRUCTURAL
STATE OF CALIFORNIA

ISAT
A Division of Tomarco Contractor Specialties

International Seismic Application Technology
14848 Northam Street, La Mirada, CA 90638
877-999-4728 (Toll Free) 714-523-0845 (fax)
www.isatsb.com

Rev. 3
08/29/23

Page
B43.2

FOR BRACE SPACING, RIGID BRACE ASSEMBLY, THREADED SUPPORT ROD AND DECK ANCHORAGE REQUIREMENTS SEE BRACING TABLES

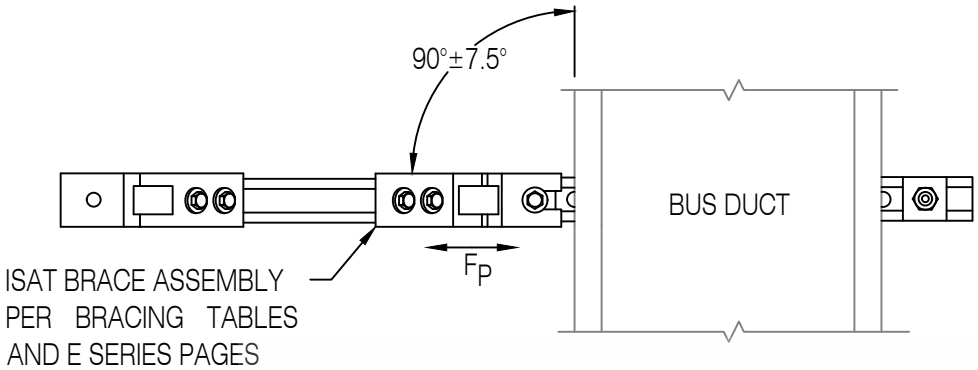

OVERHEAD VIEW

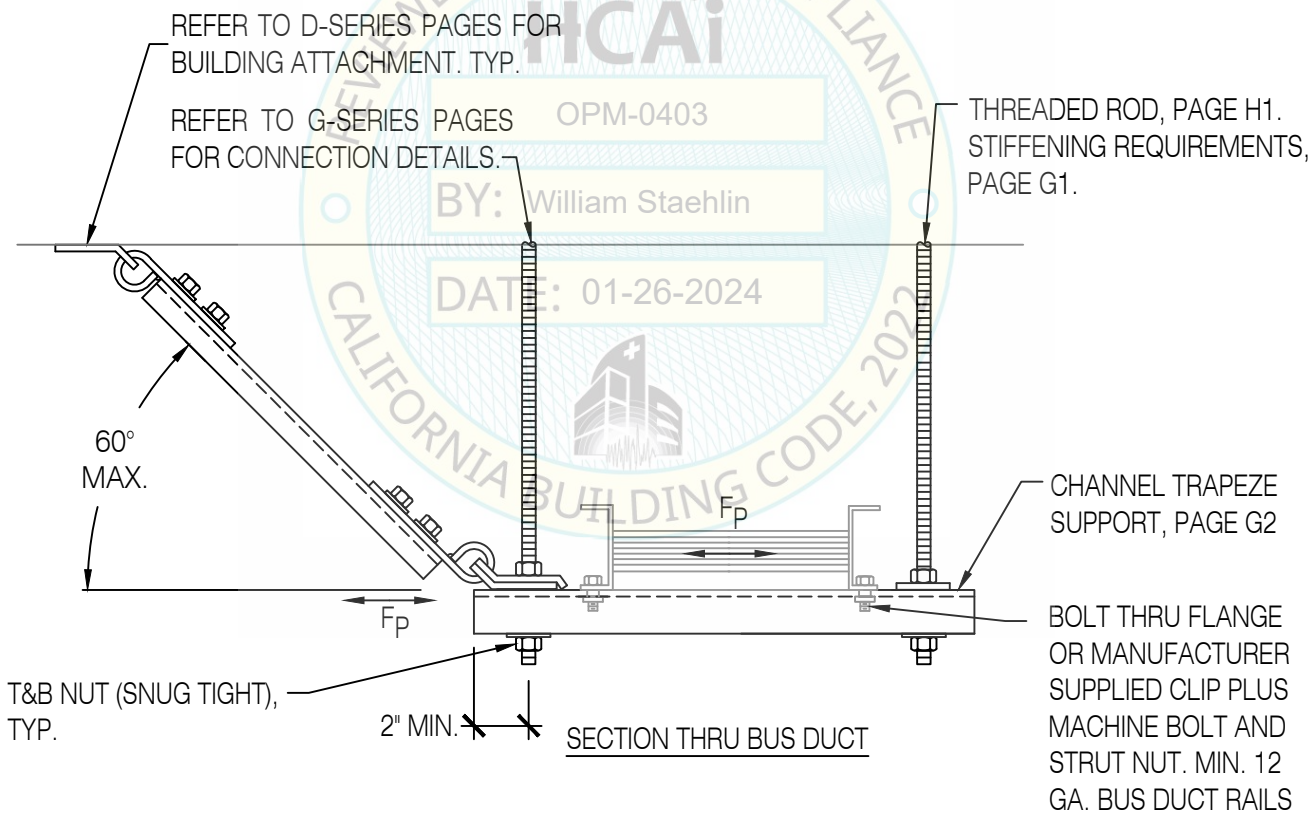

SECTION THRU BUS DUCT

REVIEWED FOR CODE COMPLIANCE
HCAi
OPM-0403
BY: William Staehlin
DATE: 01-26-2024
CALIFORNIA BUILDING CODE, 2022

BUS DUCT TRAPEZE
1-WAY TRANSVERSE, RIGID BRACING

REGISTERED PROFESSIONAL ENGINEER
MARCIN WASAZNIK
S-6612
STRUCTURAL
STATE OF CALIFORNIA

ISAT
A Division of Tomarco Contractor Specialties

International Seismic Application Technology
14848 Northam Street, La Mirada, CA 90638
877-999-4728 (Toll Free) 714-523-0845 (fax)
www.isatsb.com

Rev. 2
06/26/18

Page
B45.0

FOR BRACE SPACING, RIGID BRACE ASSEMBLY, THREADED SUPPORT ROD AND DECK ANCHORAGE REQUIREMENTS SEE BRACING TABLES

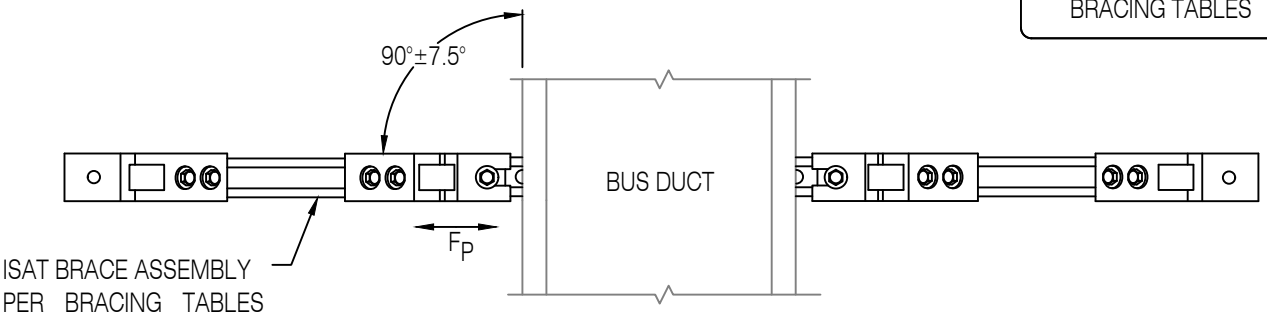

OVERHEAD VIEW

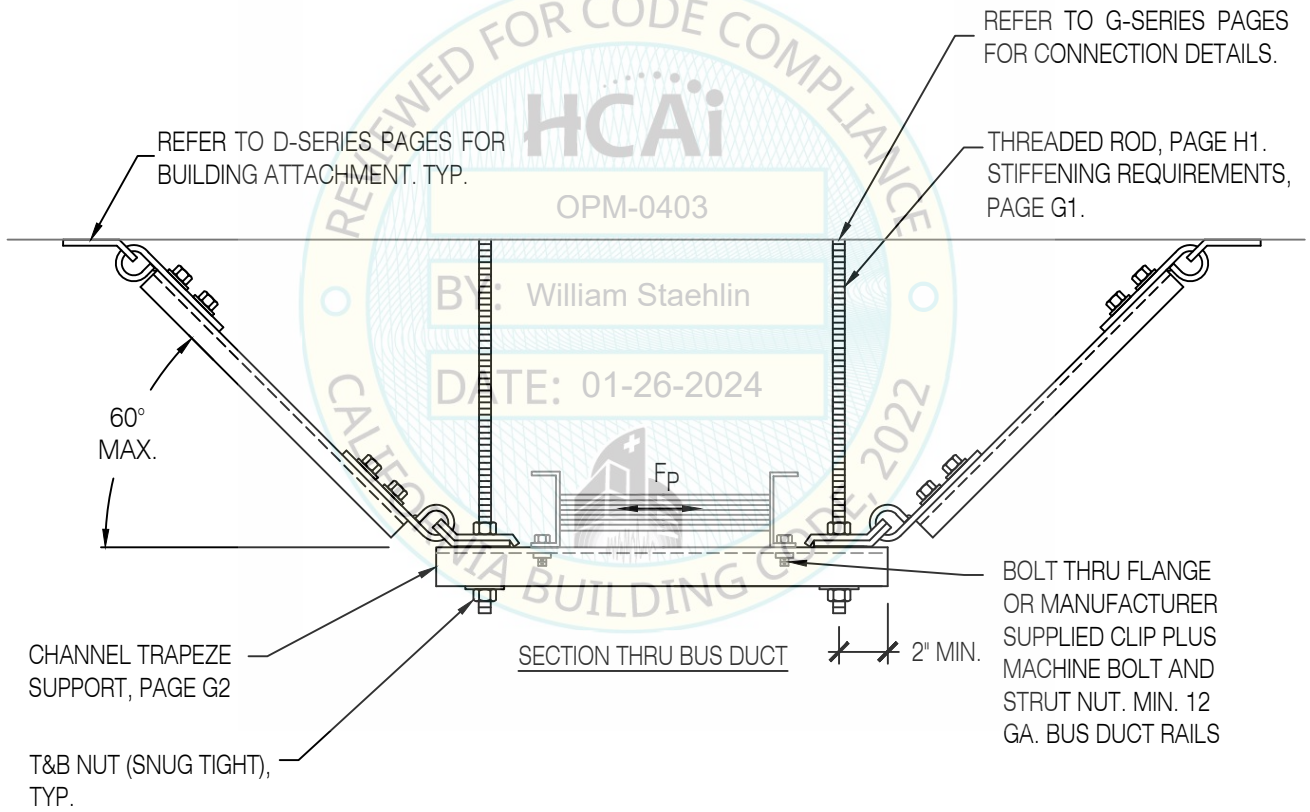

SECTION THRU BUS DUCT

REVIEWED FOR CODE COMPLIANCE
HCAi
OPM-0403
BY: William Staehlin
DATE: 01-26-2024
CALIFORNIA BUILDING CODE, 2022

BUS DUCT TRAPEZE
2-WAY TRANSVERSE, RIGID BRACING

REGISTERED PROFESSIONAL ENGINEER MARCIN WASAZNIK S-6612 STRUCTURAL STATE OF CALIFORNIA

ISAT
A Division of Tomarco Contractor Specialties

International Seismic Application Technology
14848 Northam Street, La Mirada, CA 90638
877-999-4728 (Toll Free) 714-523-0845 (fax)
www.isatsb.com

Rev. 2
06/26/18

Page
B45.1

FOR BRACE SPACING, RIGID BRACE ASSEMBLY, THREADED SUPPORT ROD AND DECK ANCHORAGE REQUIREMENTS SEE BRACING TABLES

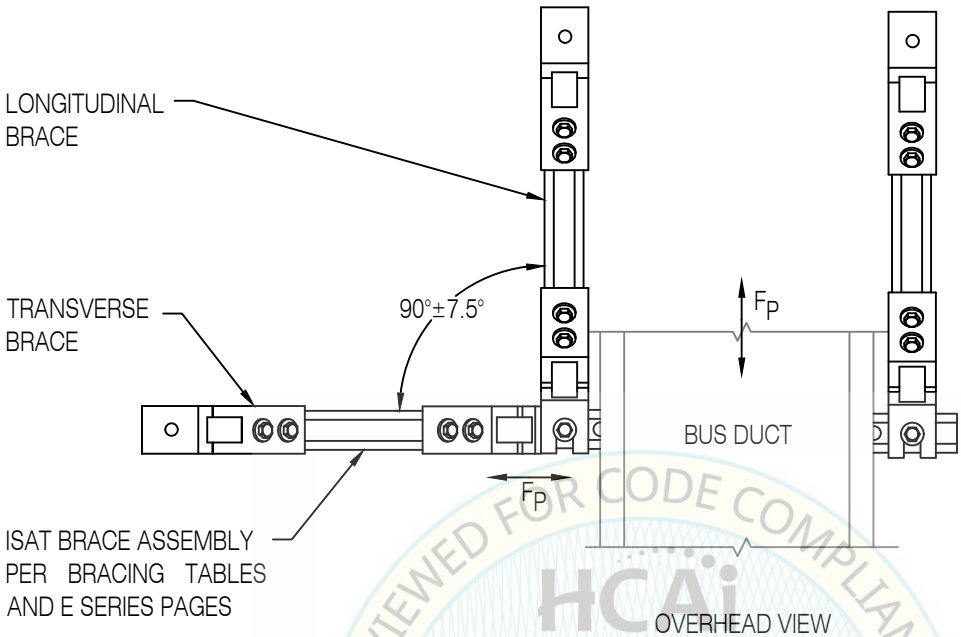

OVERHEAD VIEW

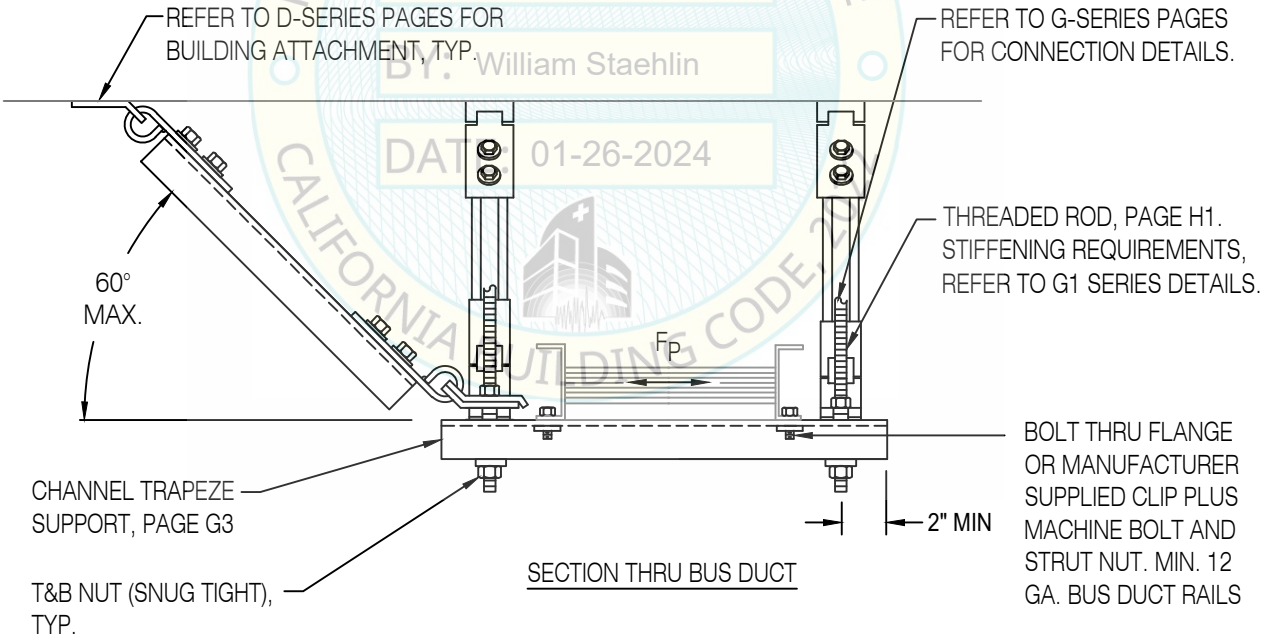

SECTION THRU BUS DUCT

REVIEWED FOR CODE COMPLIANCE
HCAi
OPM-0403
BY: William Staehlin
DATE: 01-26-2024
CALIFORNIA BUILDING CODE 2022

BUS DUCT TRAPEZE
3-WAY TRANSVERSE-LONGITUDINAL, RIGID BRACING

REGISTERED PROFESSIONAL ENGINEER MARCIN WASAZNIK S-6612 STRUCTURAL STATE OF CALIFORNIA

ISAT
A Division of Tomarco Contractor Specialties
International Seismic Application Technology
14848 Northam Street, La Mirada, CA 90638
877-999-4728 (Toll Free) 714-523-0845 (fax)
www.isatsb.com

Rev. 3
08/29/23

Page
B45.2

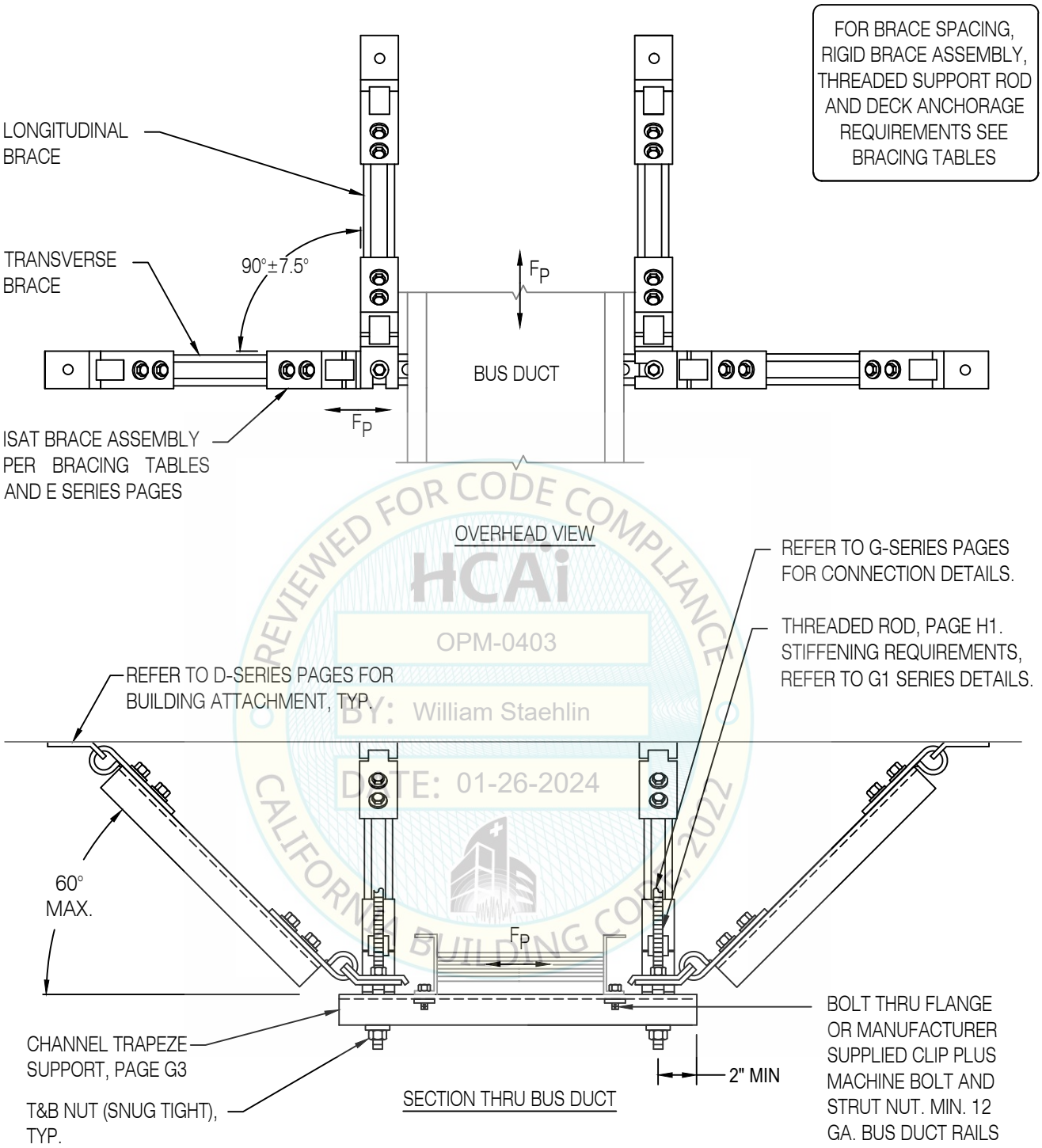

REVIEWED FOR CODE COMPLIANCE
HCAi
OPM-0403
BY: William Staehlin
DATE: 01-26-2024
CALIFORNIA BUILDING CODE 2022

BUS DUCT TRAPEZE
4-WAY TRANSVERSE-LONGITUDINAL, RIGID BRACING

REGISTERED PROFESSIONAL ENGINEER MARCIN WASAZNIK S-6612 STRUCTURAL STATE OF CALIFORNIA

ISAT
A Division of Tomarco Contractor Specialties
International Seismic Application Technology
14848 Northam Street, La Mirada, CA 90638
877-999-4728 (Toll Free) 714-523-0845 (fax)
www.isatsb.com

Rev. 3
08/29/23

Page
B45.3

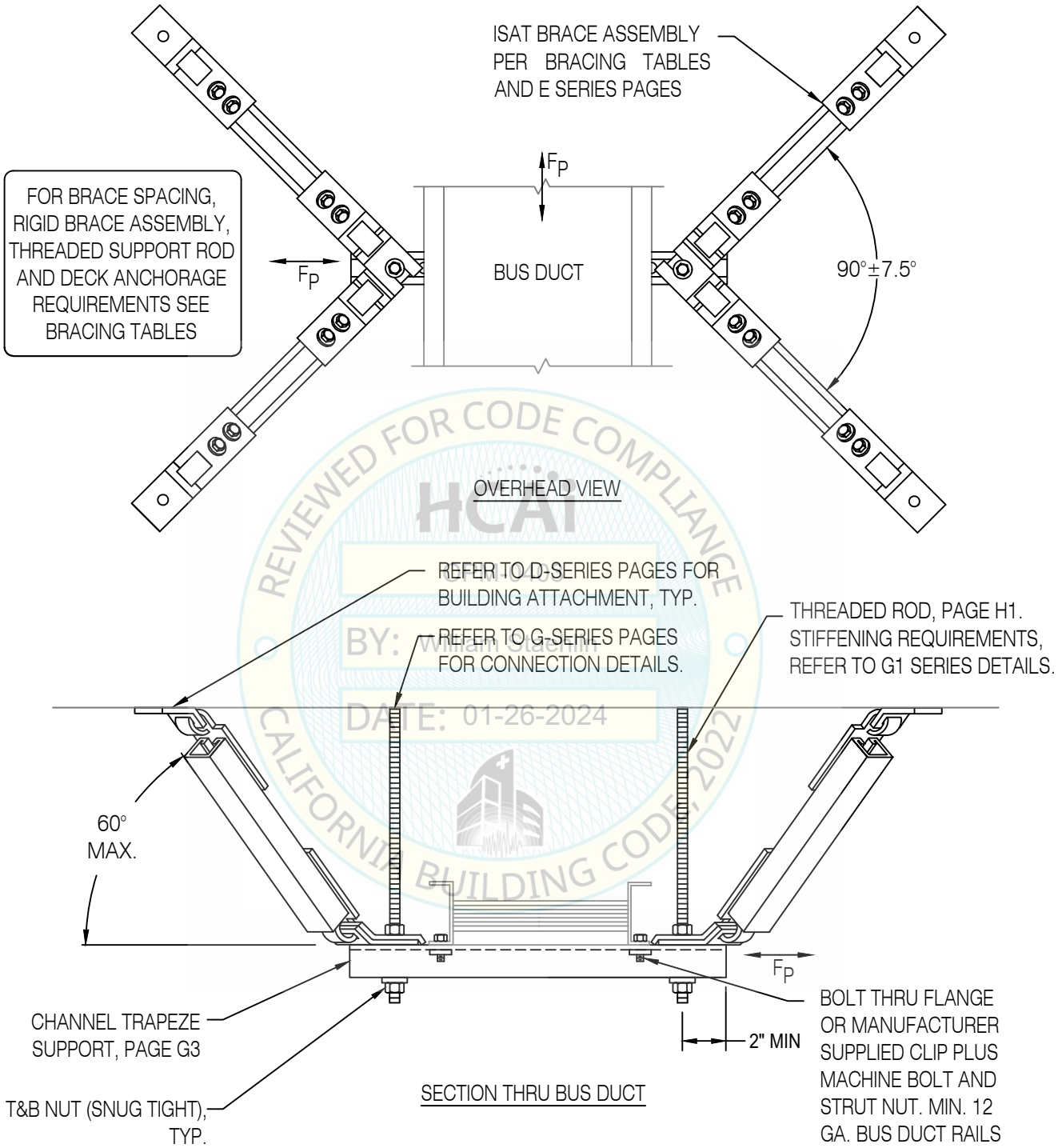

REVIEWED FOR CODE COMPLIANCE
HCAI
BY: William Staehlin
DATE: 01-26-2024
CALIFORNIA BUILDING CODE, 2022

BUS DUCT TRAPEZE
4-WAY SPLAYED TRANSVERSE-LONGITUDINAL, RIGID BRACING

REGISTERED PROFESSIONAL ENGINEER
MARCIN WASAZNIK
S 6612
STRUCTURAL
STATE OF CALIFORNIA

ISAT
A Division of Tomarco Contractor Specialties

International Seismic Application Technology
14848 Northam Street, La Mirada, CA 90638
877-999-4728 (Toll Free) 714-523-0845 (fax)
www.isatsb.com

Rev. 3
08/29/23

Page
B45.4

FOR BRACE SPACING, CABLE BRACE ASSEMBLY, THREADED SUPPORT ROD AND DECK ANCHORAGE REQUIREMENTS SEE BRACING TABLES

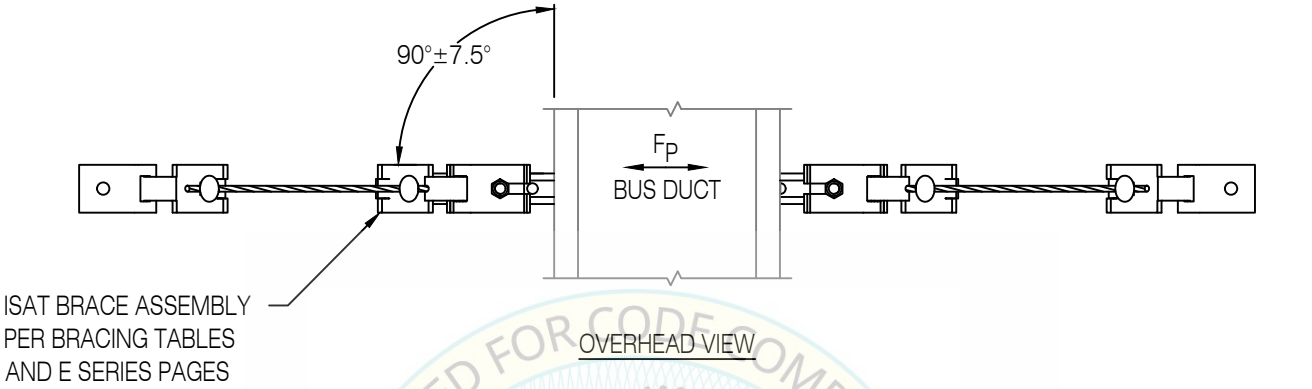

OVERHEAD VIEW

REVIEWED FOR CODE COMPLIANCE
HCAi
OPM-0403
BY: William Staehlin
DATE: 01-26-2024
CALIFORNIA BUILDING CODE, 2022

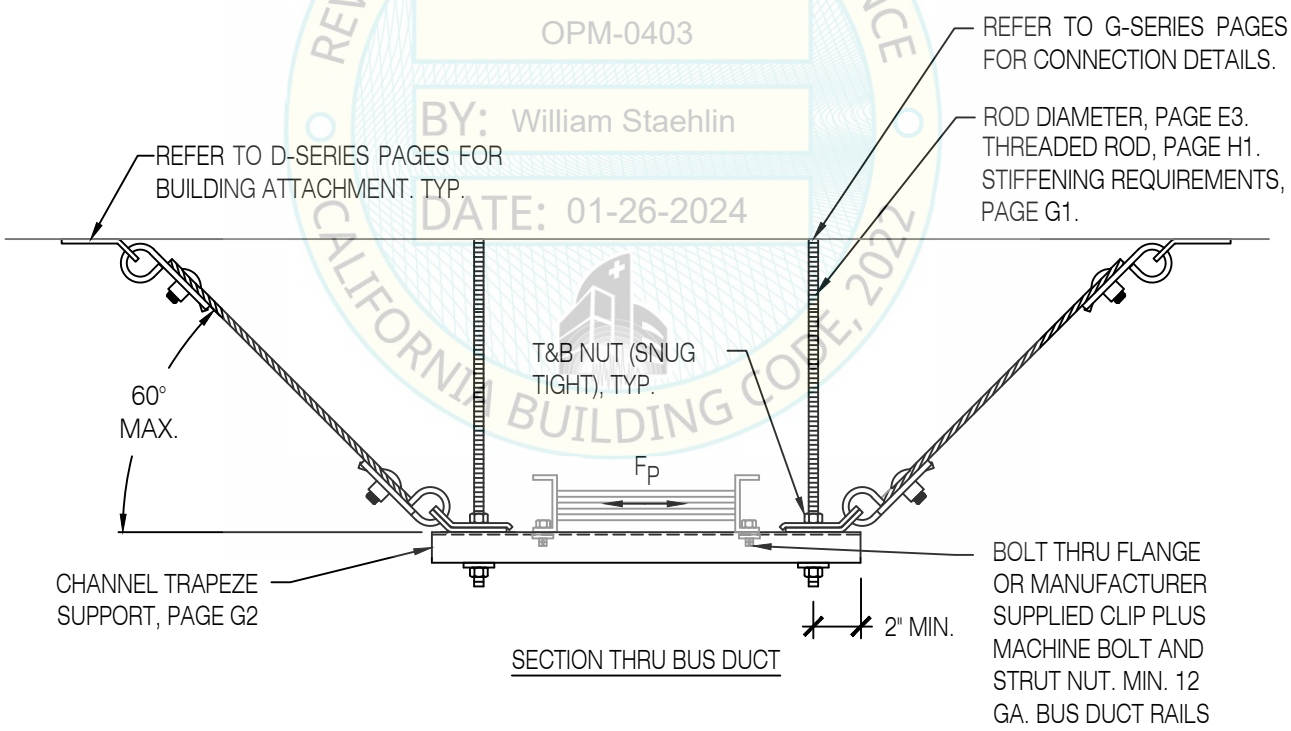

SECTION THRU BUS DUCT

BUS DUCT TRAPEZE
2-WAY TRANSVERSE, CABLE BRACING

REGISTERED PROFESSIONAL ENGINEER MARCIN WASAZNIK S-6612 STRUCTURAL STATE OF CALIFORNIA

ISAT
A Division of Tomarco Contractor Specialties
International Seismic Application Technology
14848 Northam Street, La Mirada, CA 90638
877-999-4728 (Toll Free) 714-523-0845 (fax)
www.isatsb.com

Rev. 2
06/26/18

Page
B46.0

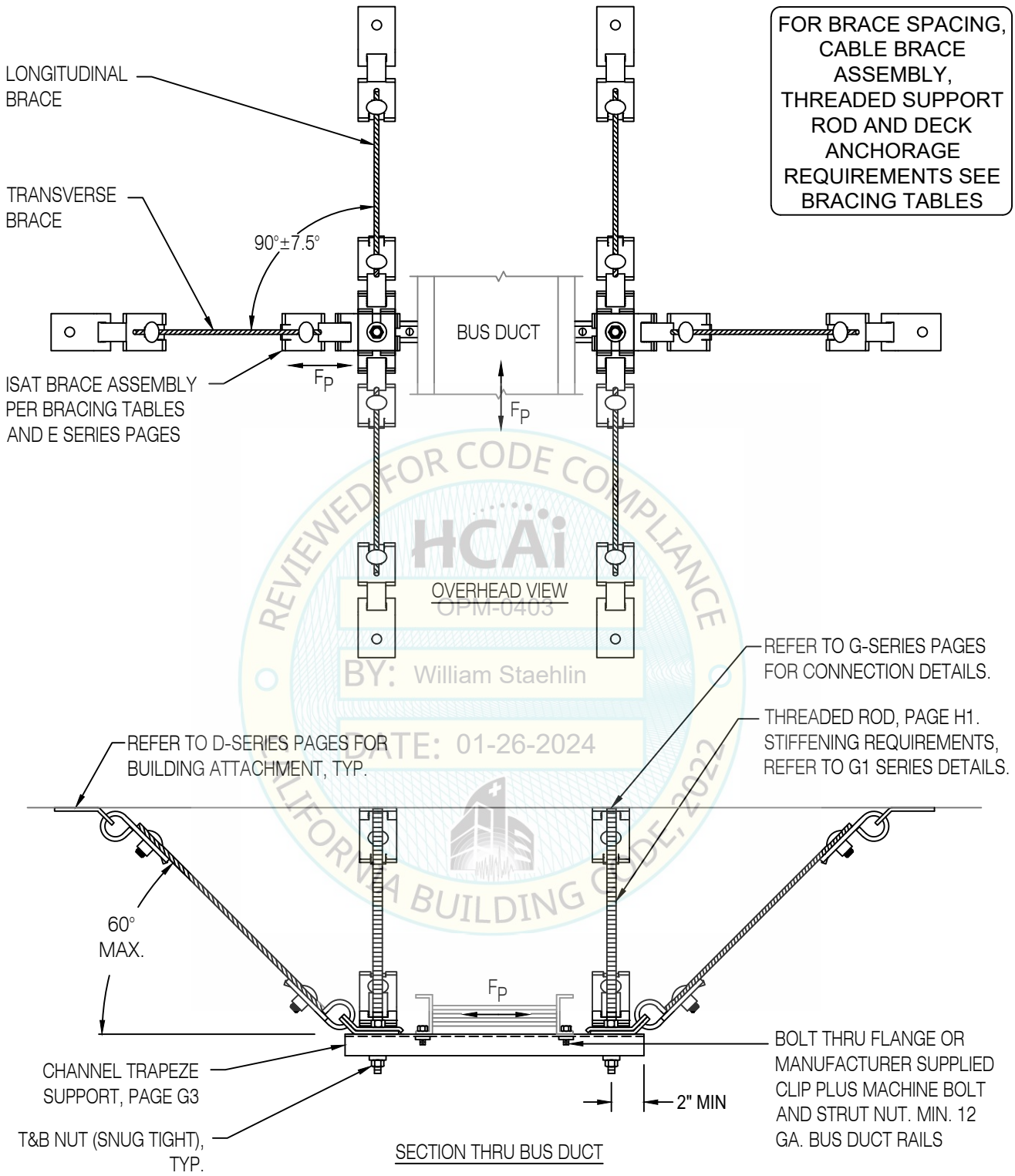

REVIEWED FOR CODE COMPLIANCE
HCAi
OPM-0403
BY: William Staehlin
DATE: 01-26-2024
CALIFORNIA BUILDING CODE, 2022

BUS DUCT TRAPEZE
6-WAY TRANSVERSE-LONGITUDINAL, CABLE BRACING

REGISTERED PROFESSIONAL ENGINEER
MARCIN WASAZNIK
S 6612
STRUCTURAL
STATE OF CALIFORNIA

ISAT
A Division of Tomarco Contractor Specialties

International Seismic Application Technology
14848 Northam Street, La Mirada, CA 90638
877-999-4728 (Toll Free) 714-523-0845 (fax)
www.isatsb.com

Rev. 3
08/29/23

Page
B46.1

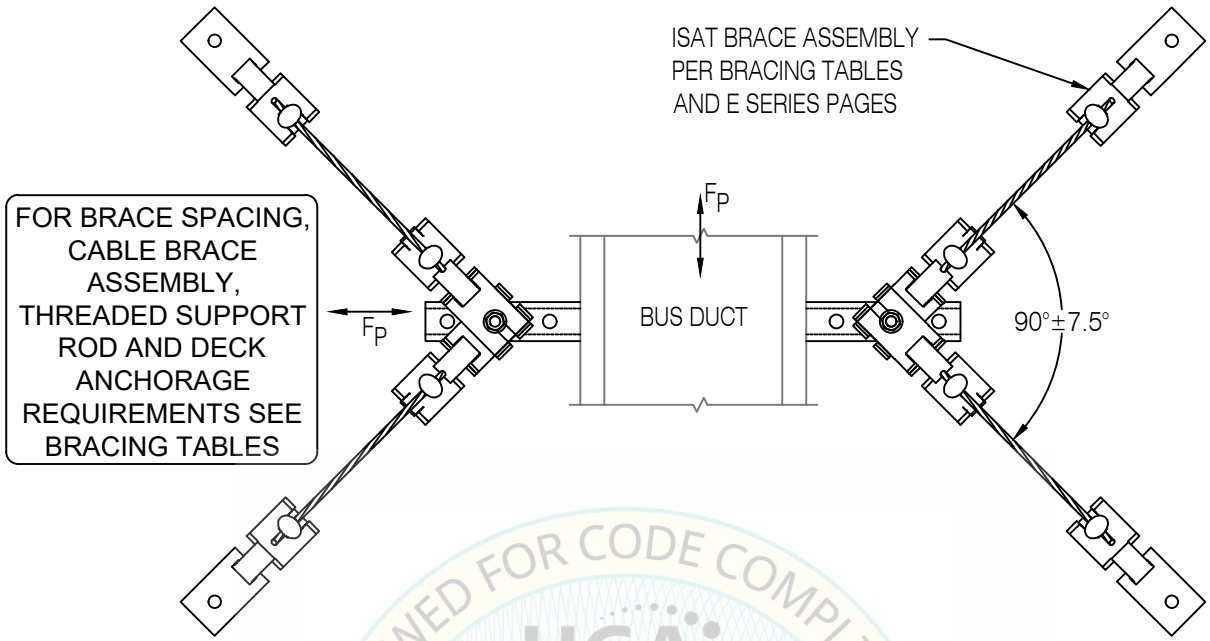

OVERHEAD VIEW

REVIEWED FOR CODE COMPLIANCE
HCAi
OPM-0403
BY: William Staehlin
DATE: 01-26-2024
CALIFORNIA BUILDING CODE, 2022

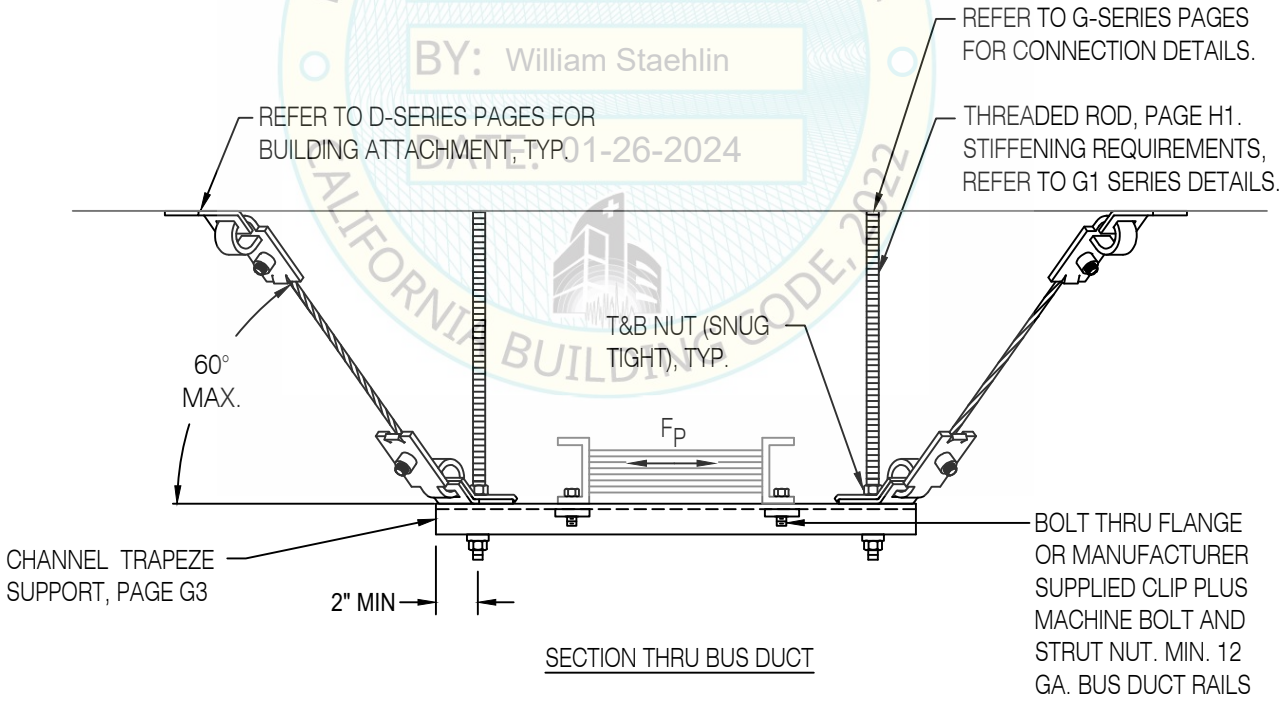

SECTION THRU BUS DUCT

BUS DUCT TRAPEZE
4-WAY SPLAYED, CABLE BRACING

REGISTERED PROFESSIONAL ENGINEER MARCIN WASAZNIK S-6612 STRUCTURAL STATE OF CALIFORNIA

ISAT
A Division of Tomarco Contractor Specialties
International Seismic Application Technology
14848 Northam Street, La Mirada, CA 90638
877-999-4728 (Toll Free) 714-523-0845 (fax)
www.isatsb.com

Rev. 3
08/29/23

Page
B46.2

FOR BRACE SPACING, RIGID BRACE ASSEMBLY, THREADED SUPPORT ROD AND DECK ANCHORAGE REQUIREMENTS SEE BRACING TABLES

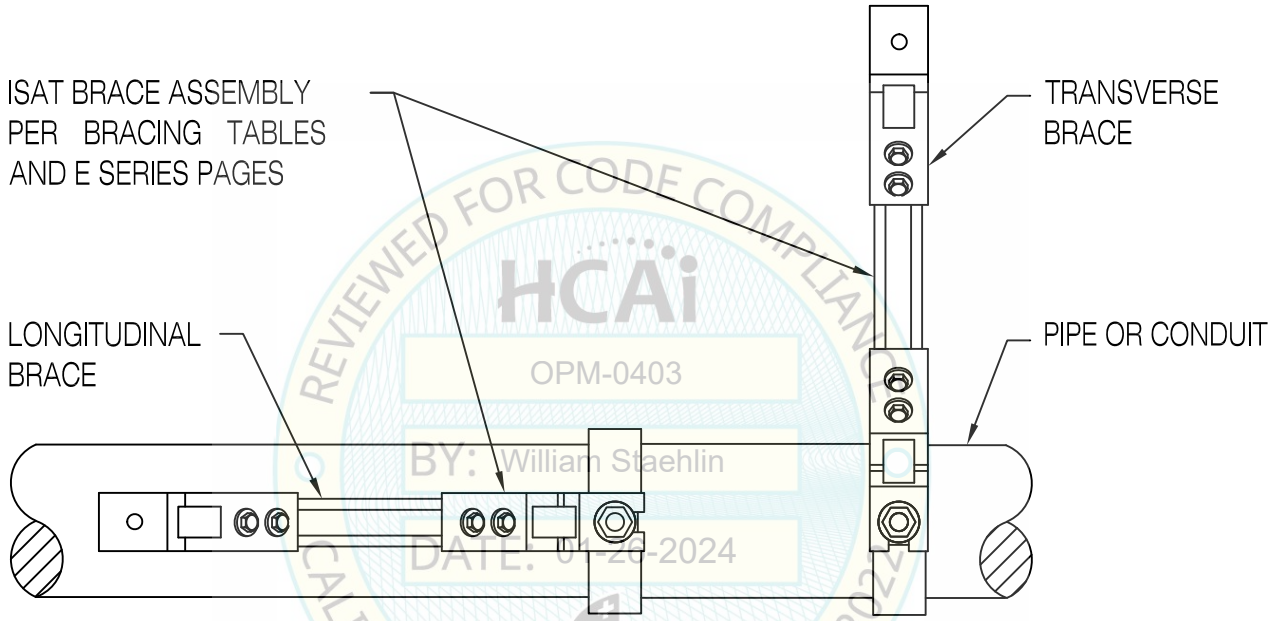

REVIEWED FOR CODE COMPLIANCE
HCAi
OPM-0403
BY: William Staehlin
DATE: 01-26-2024
CALIFORNIA BUILDING CODE, 2022

MAY BE LOCATED AT DIFFERENT VERTICAL SUPPORTS.
LOCATION AT THE SAME VERTICAL SUPPORT ROD IS NOT REQUIRED.

NON-CONCURRENT BRACING CONFIGURATION
TRANSVERSE-LONGITUDINAL, RIGID OR CABLE BRACING

REGISTERED PROFESSIONAL ENGINEER MARCIN WASAZNIK S-6612 STRUCTURAL STATE OF CALIFORNIA

ISAT
A Division of Tomarco Contractor Specialties
International Seismic Application Technology
14848 Northam Street, La Mirada, CA 90638
877-999-4728 (Toll Free) 714-523-0845 (fax)
www.isatsb.com

Rev. 2
06/12/18

Page
B202.0

REFER TO B-SERIES INSTALLATION DETAILS FOR INFORMATION NOT SHOWN

FOR BRACE SPACING, CABLE BRACE ASSEMBLY, THREADED SUPPORT ROD AND DECK ANCHORAGE REQUIREMENTS SEE BRACING TABLES

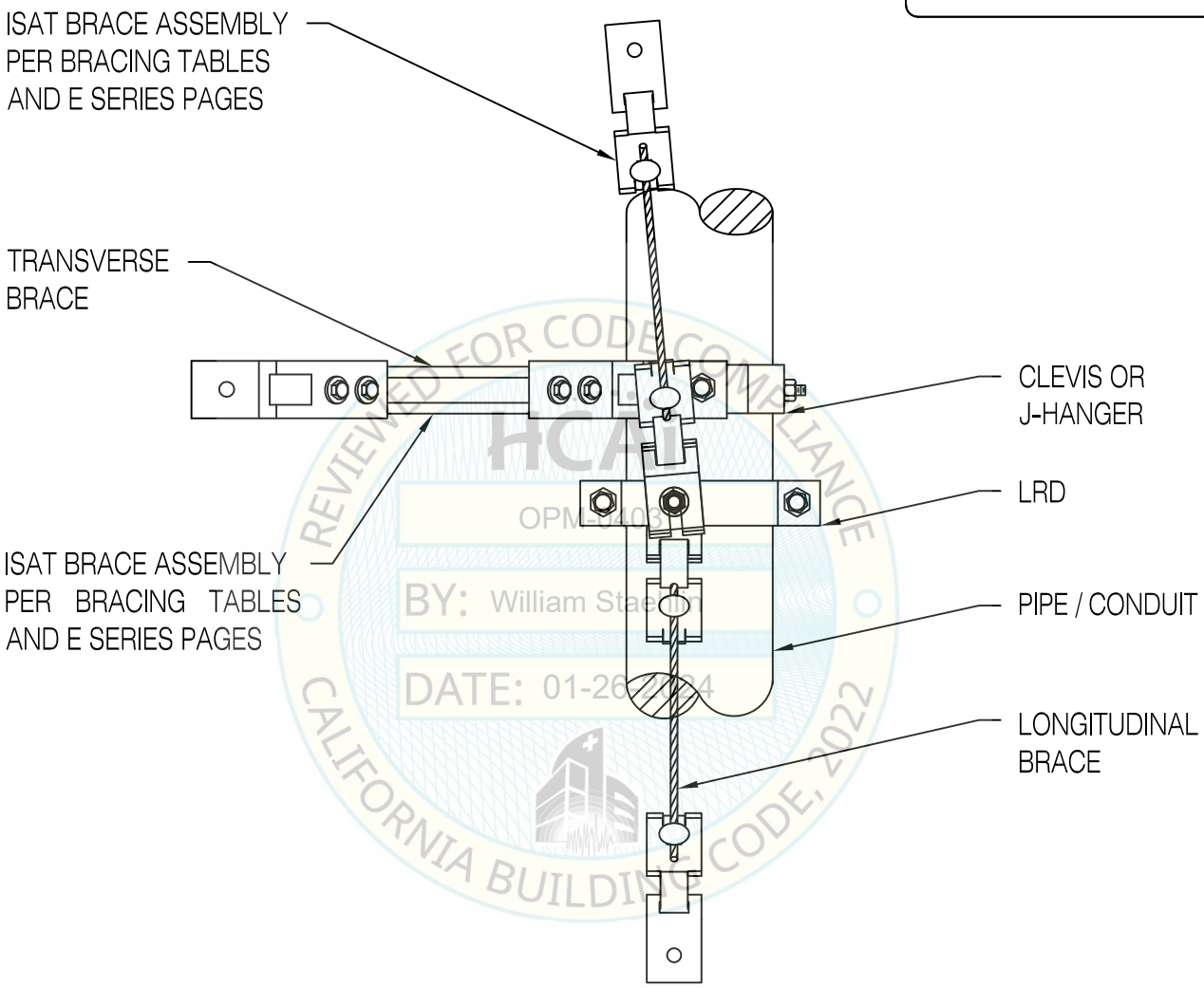

REVIEWED FOR CODE COMPLIANCE
HCAI
OPM-0403
BY: William Staehlin
DATE: 01-26-2024
CALIFORNIA BUILDING CODE, 2022

ISAT CABLE AND RIGID BRACING ASSEMBLIES MAY BE USED ON THE SAME RUN WHEN THE BRACING TYPES ARE PERPENDICULAR TO EACH OTHER

MIXED BRACING TYPES FOR SINGLE HUNG UTILITY

REGISTERED PROFESSIONAL ENGINEER
MARCIN WASAZNIK
S-6612
STRUCTURAL
STATE OF CALIFORNIA

ISAT
A Division of Tomarco Contractor Specialties

International Seismic Application Technology
14848 Northam Street, La Mirada, CA 90638
877-999-4728 (Toll Free) 714-523-0845 (fax)
www.isatsb.com

Rev. 2
06/12/18

Page
B203.0

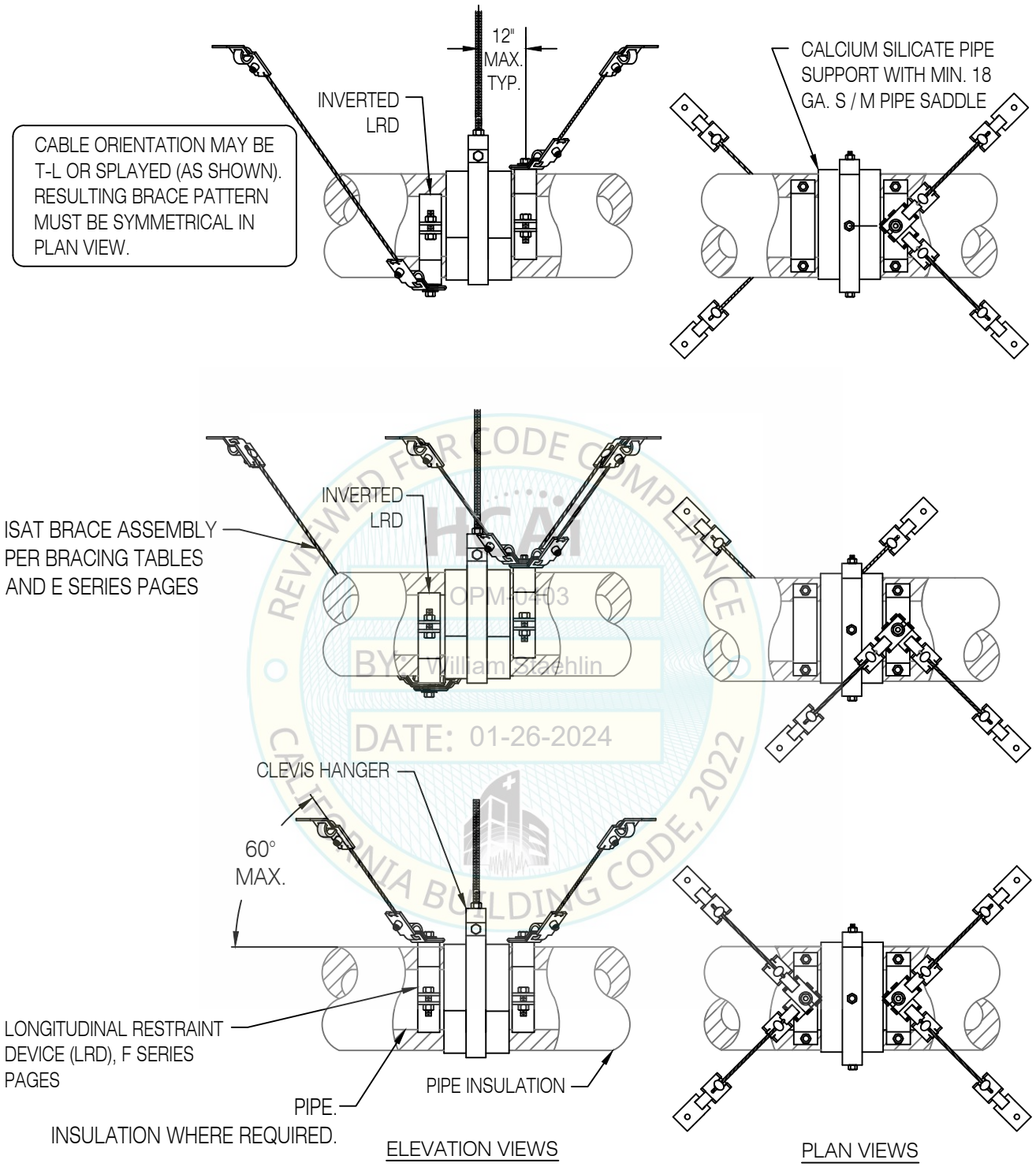

REVIEWED FOR CODE COMPLIANCE
HCAI
OPM-0403
BY: William Staehlin
DATE: 01-26-2024
CALIFORNIA BUILDING CODE, 2022

ALTERNATE CABLE BRACE ATTACHMENTS, DUAL LRD'S TRANSVERSE / LONGITUDINAL BRACE LOCATIONS

REGISTERED PROFESSIONAL ENGINEER
MARCIN WASAZNIK
S-6612
STRUCTURAL
STATE OF CALIFORNIA

ISAT
A Division of Tomarco Contractor Specialties

International Seismic Application Technology
14848 Northam Street, La Mirada, CA 90638
877-999-4728 (Toll Free) 714-523-0845 (fax)
www.isatsb.com

Rev. 3
06/26/18

Page
B204.0

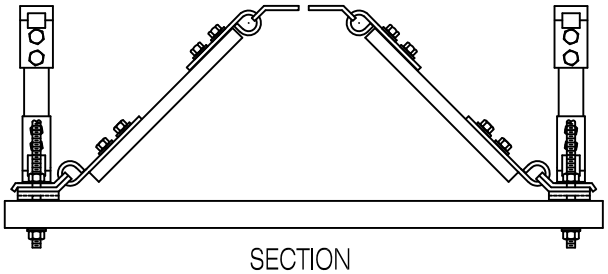

SECTION
ALTERNATE TRANSVERSE BRACE PATTERN

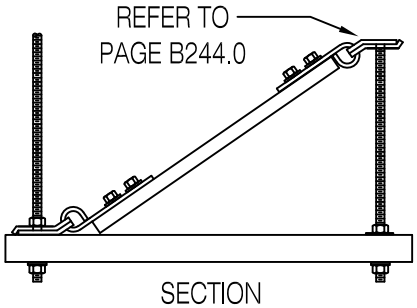

SECTION
ALTERNATE TRANSVERSE BRACE PATTERN

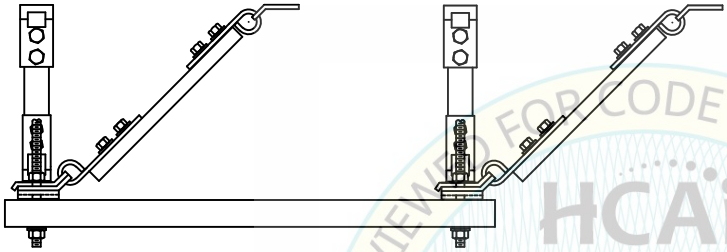

SECTION
ALTERNATE TRANSVERSE BRACE PATTERN

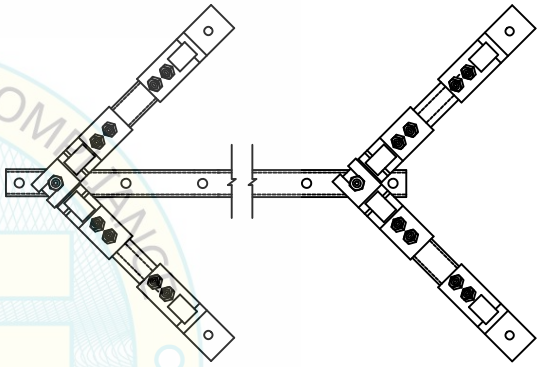

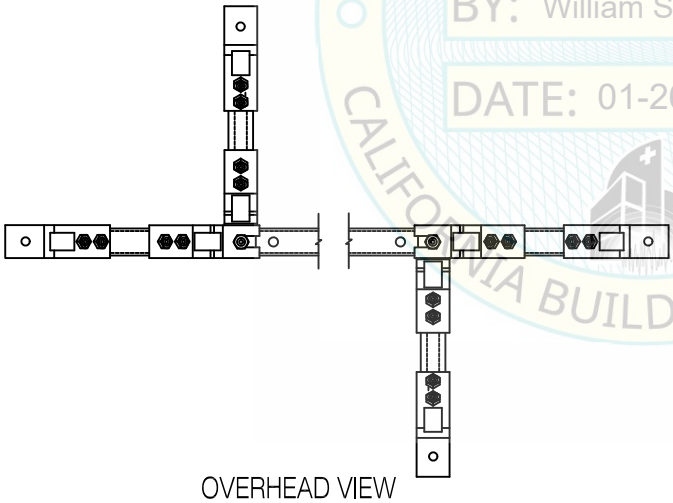

OVERHEAD VIEW
ALTERNATE LONGITUDINAL BRACE PATTERN

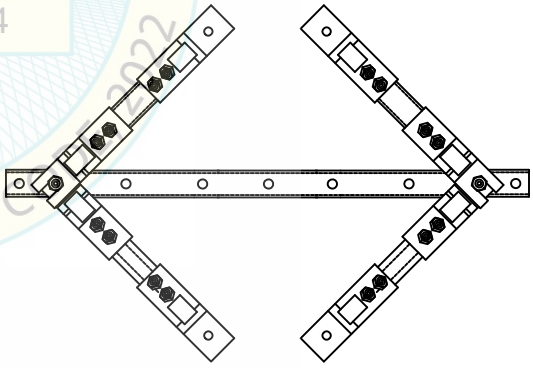

OVERHEAD VIEW
ALTERNATE SPLAYED BRACE PATTERNS

REVIEWED FOR CODE COMPLIANCE
HCAi
OPM-0403
BY: William Staehlin
DATE: 01-26-2024
CALIFORNIA BUILDING CODE 2022

ALTERNATE RIGID BRACE ARM PATTERNS
TRAPEZE SUPPORTED SYSTEMS

REGISTERED PROFESSIONAL ENGINEER
MARCIN WASAZNIK
S 6612
STRUCTURAL
STATE OF CALIFORNIA

ISAT
A Division of Tomarco Contractor Specialties

International Seismic Application Technology
14848 Northam Street, La Mirada, CA 90638
877-999-4728 (Toll Free) 714-523-0845 (fax)
www.isatsb.com

Rev. 5
02/19/18

Page
B220.0

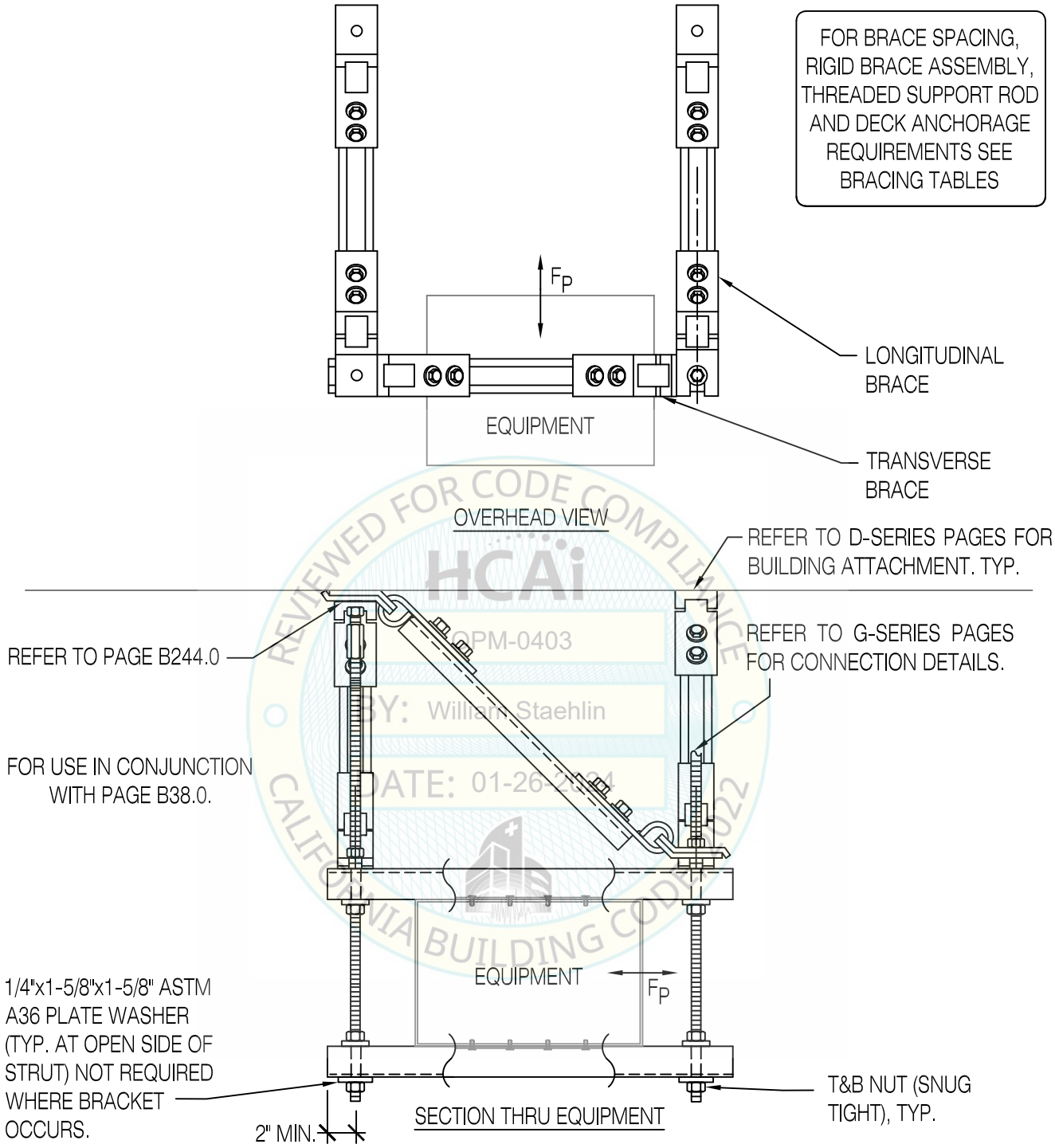

REVIEWED FOR CODE COMPLIANCE
HCAi
OPM-0403
BY: William Staehlin
DATE: 01-26-2024
CALIFORNIA BUILDING CODE 2022

MAXIMUM UNIT LENGTH 3 FEET, FOR UNITS EXCEEEDING 3 FEET SEE PAGE B38.1 & B38.2

IN-LINE EQUIPMENT: ALTERNATE CROSS TOP, 3-WAY TRANSVERSE-LONGITUDINAL RIGID BRACING

REGISTERED PROFESSIONAL ENGINEER MARCIN WASAZNIK S-6612 STRUCTURAL STATE OF CALIFORNIA

ISAT
A Division of Tomarco Contractor Specialties

International Seismic Application Technology
14848 Northam Street, La Mirada, CA 90638
877-999-4728 (Toll Free) 714-523-0845 (fax)
www.isatsb.com

Rev. 4
06/12/18

Page
B220.1

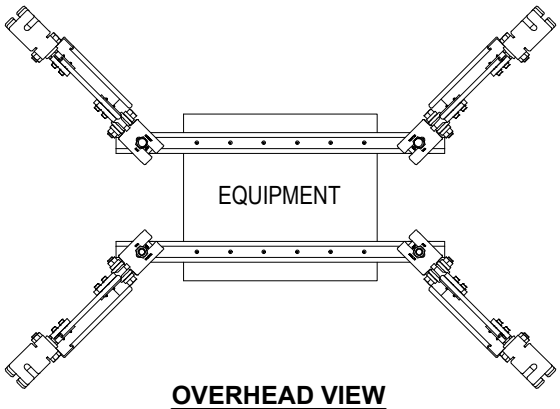

OVERHEAD VIEW

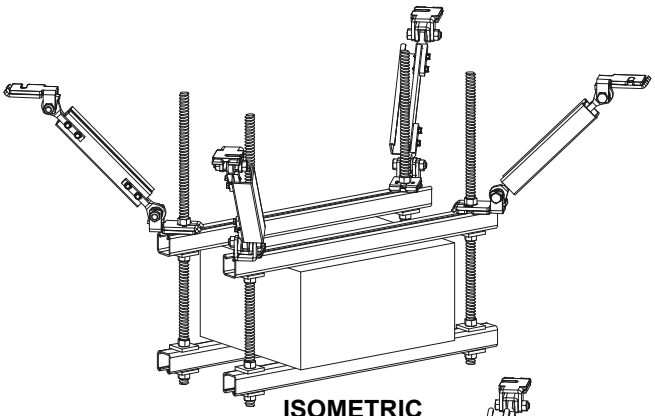

ISOMETRIC

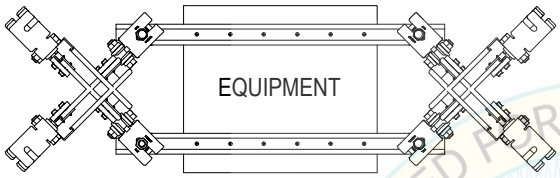

OVERHEAD VIEW

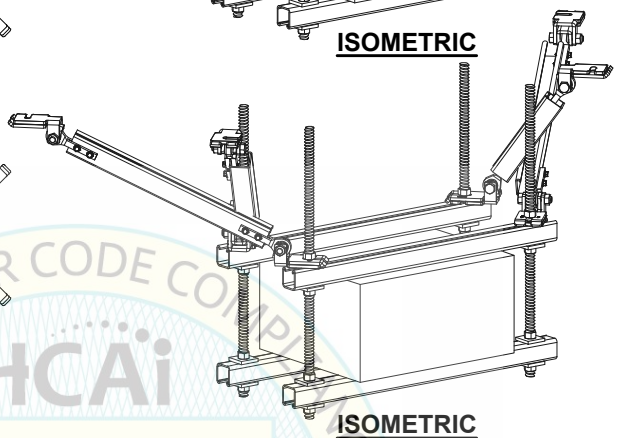

ISOMETRIC

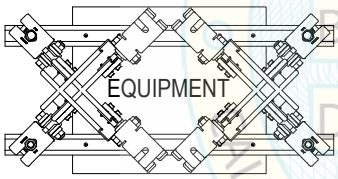

OVERHEAD VIEW

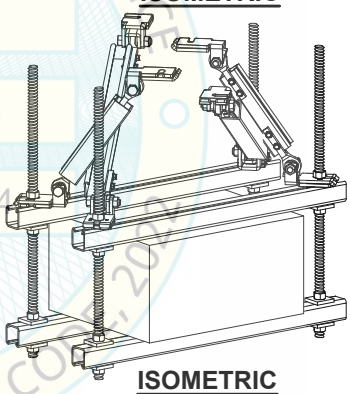

ISOMETRIC

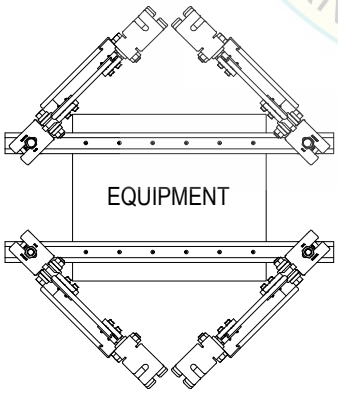

OVERHEAD VIEW

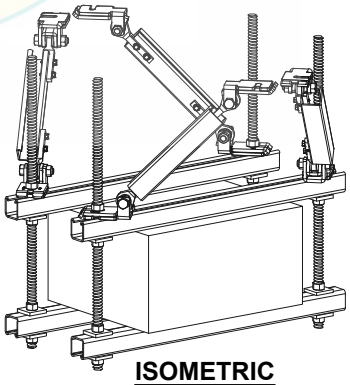

ISOMETRIC

REVIEWED FOR CODE COMPLIANCE
HCAi
OPM-0403
BY: William Staehlin
DATE: 01-26-2024
CALIFORNIA BUILDING CODE, 2022

ALTERNATE EQUIPMENT
RIGID BRACING OPTIONS

FOR USE IN CONJUNCTION WITH PAGES B38.0 THRU B38.2

REGISTERED PROFESSIONAL ENGINEER
MARCIN WASAZNIK
S 6612
STRUCTURAL
STATE OF CALIFORNIA

ISAT
A Division of Tomarco Contractor Specialties
International Seismic Application Technology
14848 Northam Street, La Mirada, CA 90638
877-999-4728 (Toll Free) 714-523-0845 (fax)
www.isatsb.com

Rev. 0
05/10/23

Page
B220.2

FOR BRACE SPACING, CABLE BRACE ASSEMBLY, THREADED SUPPORT ROD AND DECK ANCHORAGE REQUIREMENTS SEE BRACING TABLES, PG. E3.

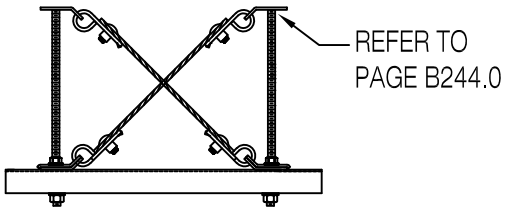

SECTION THRU TRAPEZE
ALTERNATE CABLE/WIRE TRANSVERSE BRACE PATTERN

FOR USE WITH ANY "B" SERIES CABLE/WIRE BRACING DETAIL UTILIZING TRAPEZE SUPPORT.

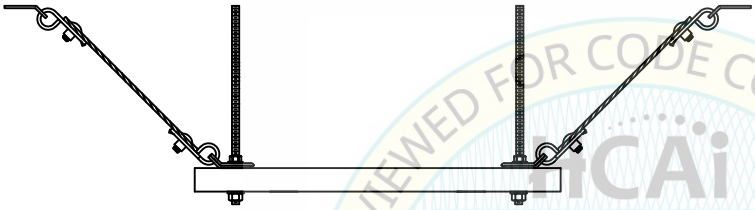

SECTION THRU TRAPEZE
STD. CABLE/WIRE TRANSVERSE BRACE PATTERN

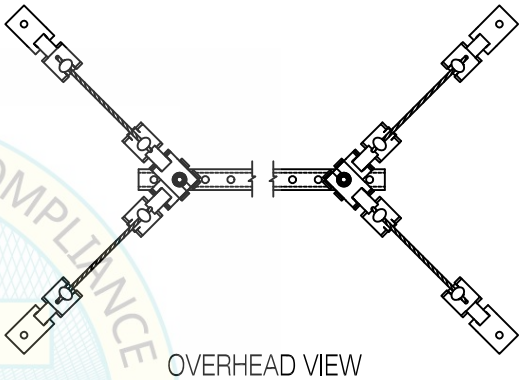

OVERHEAD VIEW
STD. SPLAYED CABLE/WIRE BRACE PATTERN

REVIEWED FOR CODE COMPLIANCE
HCAi
OPM-0403
BY: William Staehlin
DATE: 01-26-2024
CALIFORNIA BUILDING CODE 2022

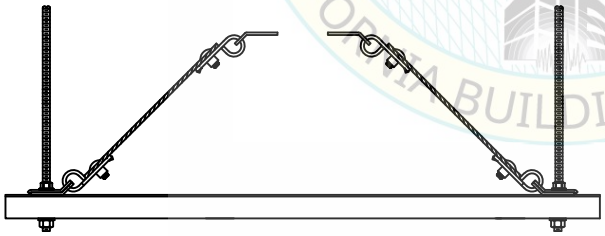

SECTION THRU TRAPEZE
ALTERNATE CABLE/WIRE TRANSVERSE BRACE PATTERN

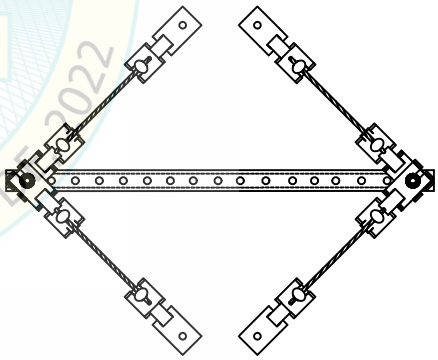

OVERHEAD VIEW
ALTERNATE SPLAYED CABLE/WIRE BRACE PATTERN

ALTERNATE CABLE OR WIRE BRACE ARM PATTERNS
TRAPEZE SUPPORTED SYSTEMS

ISAT
A Division of Tomarco Contractor Specialties
International Seismic Application Technology
14848 Northam Street, La Mirada, CA 90638
877-999-4728 (Toll Free) 714-523-0845 (fax)
www.isatsb.com

Rev. 3
02/19/18

Page
B221.0

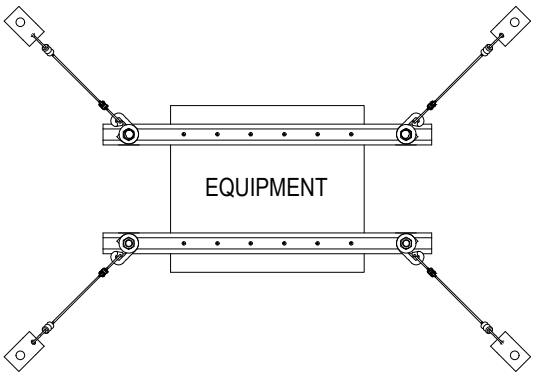

OVERHEAD VIEW

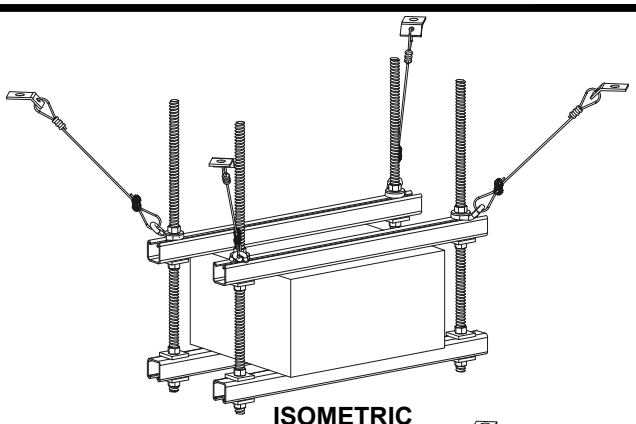

ISOMETRIC

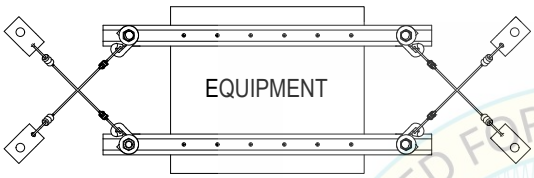

OVERHEAD VIEW

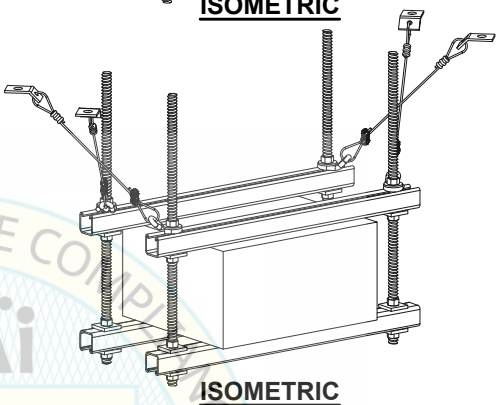

ISOMETRIC

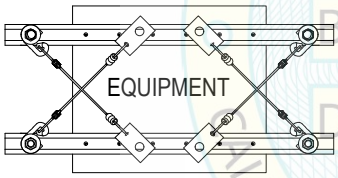

OVERHEAD VIEW

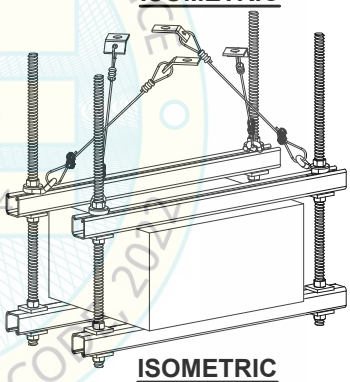

ISOMETRIC

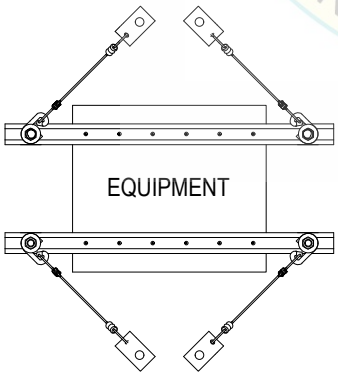

OVERHEAD VIEW

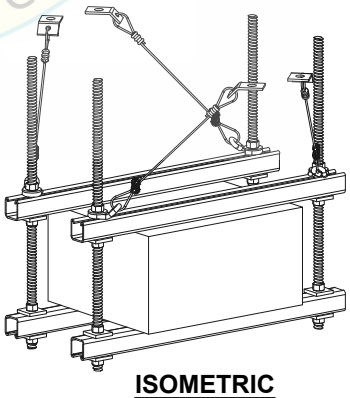

ISOMETRIC

REVIEWED FOR CODE COMPLIANCE
HCAi
OPM-0403
BY: William Staehlin
DATE: 01-26-2024
CALIFORNIA BUILDING CODE 2022

ALTERNATE EQUIPMENT CABLE BRACING OPTIONS

FOR USE IN CONJUNCTION WITH PAGES B38.0 THRU B38.2

REGISTERED PROFESSIONAL ENGINEER
MARCIN WASAZNIK
S 6612
STRUCTURAL
STATE OF CALIFORNIA

ISAT
A Division of Tomarco Contractor Specialties
International Seismic Application Technology
14848 Northam Street, La Mirada, CA 90638
877-999-4728 (Toll Free) 714-523-0845 (fax)
www.isatsb.com

Rev. 0
05/10/23

Page
B221.1

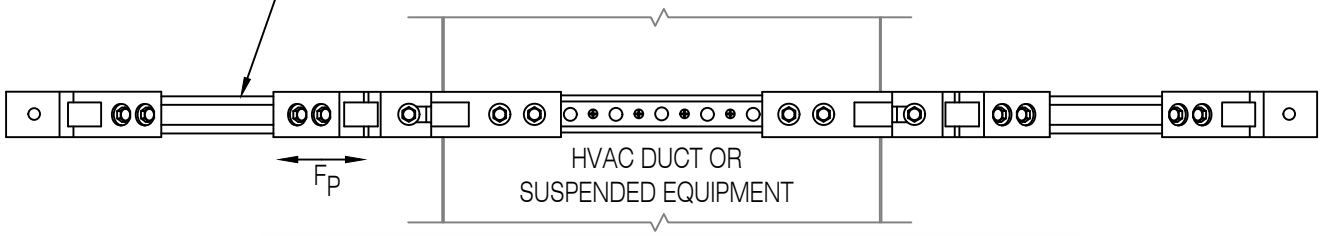

OVERHEAD VIEW

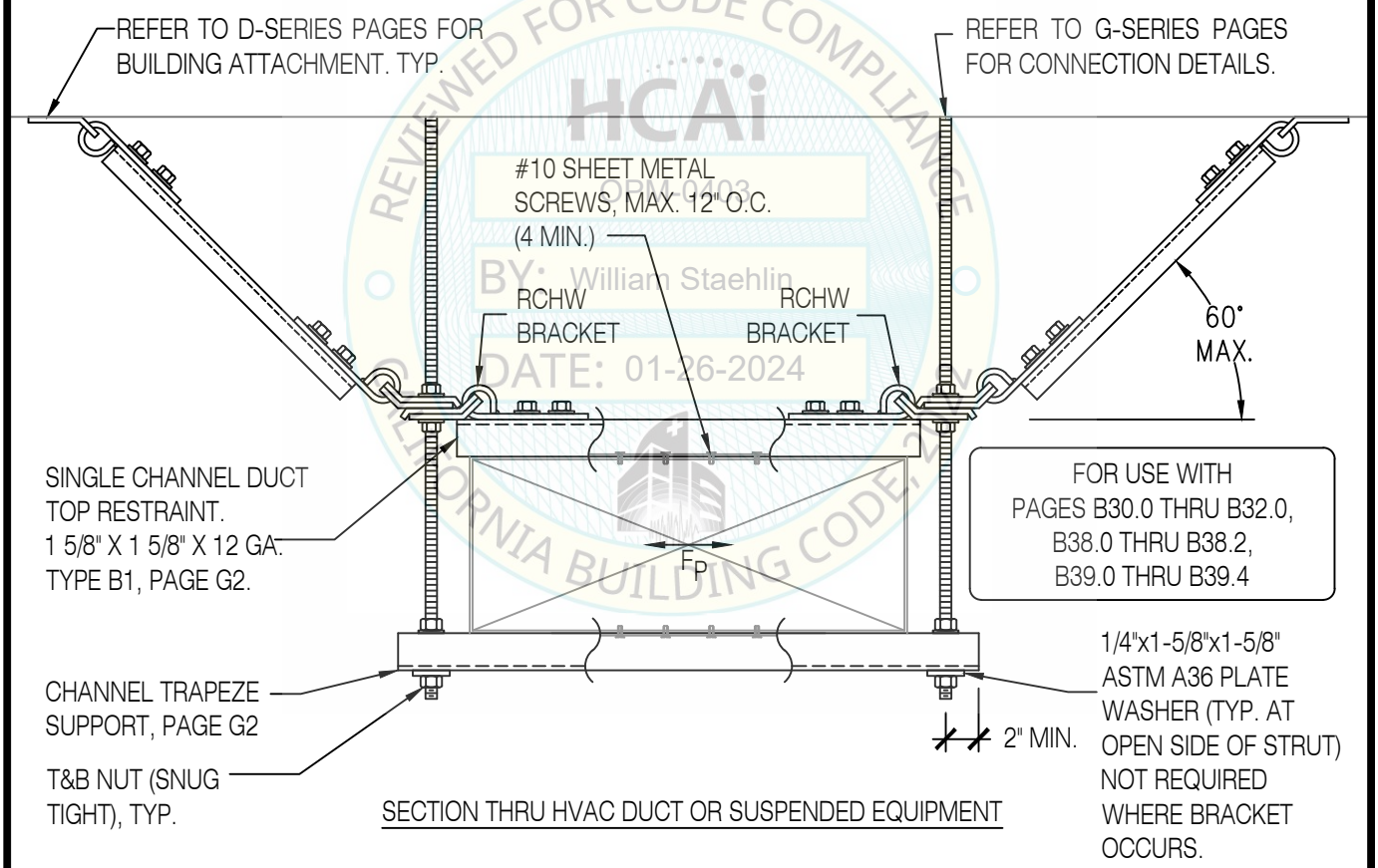

SECTION THRU HVAC DUCT OR SUSPENDED EQUIPMENT

REVIEWED FOR CODE COMPLIANCE
HCAi
OPM-0403
BY: William Staehlin
DATE: 01-26-2024
CALIFORNIA BUILDING CODE, 2019

HVAC DUCT OR SUSPENDED EQUIPMENT ALTERNATE DETAIL
OPTIONAL RETRO FIT CROSS-TOP BOX-IN (TOP CAP)

REGISTERED PROFESSIONAL ENGINEER
MARCIN WASAZNIK
S-6612
STRUCTURAL
STATE OF CALIFORNIA

ISAT
A Division of Tomarco Contractor Specialties

International Seismic Application Technology
14848 Northam Street, La Mirada, CA 90638
877-999-4728 (Toll Free) 714-523-0845 (fax)
www.isatsb.com

Rev. 3
06/26/18

Page
B230.0

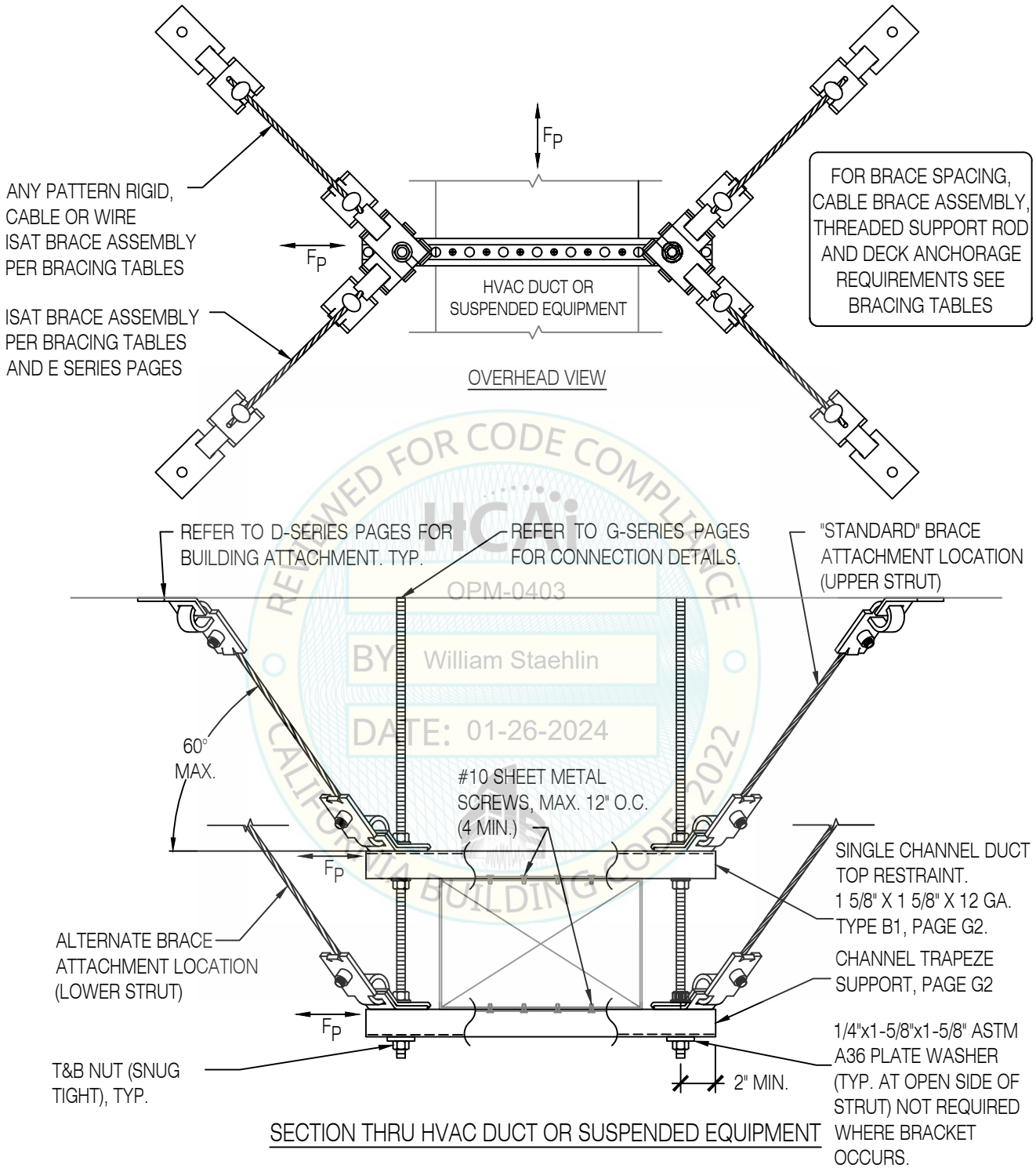

REVIEWED FOR CODE COMPLIANCE
HCAi
OPM-0403
BY: William Staehlin
DATE: 01-26-2024
CALIFORNIA BUILDING CODE 2022

HVAC DUCT OR SUSPENDED EQUIPMENT ALTERNATE DETAIL
OPTIONAL BRACE ARM CONNECTION TO LOWER TRAPEZE STRUT

REGISTERED PROFESSIONAL ENGINEER MARCIN WASAZNIK S-6612 STRUCTURAL STATE OF CALIFORNIA

ISAT
A Division of Tomarco Contractor Specialties

International Seismic Application Technology
14848 Northam Street, La Mirada, CA 90638
877-999-4728 (Toll Free) 714-523-0845 (fax)
www.isatsb.com

Rev. 3
06/26/18

Page
B231.0

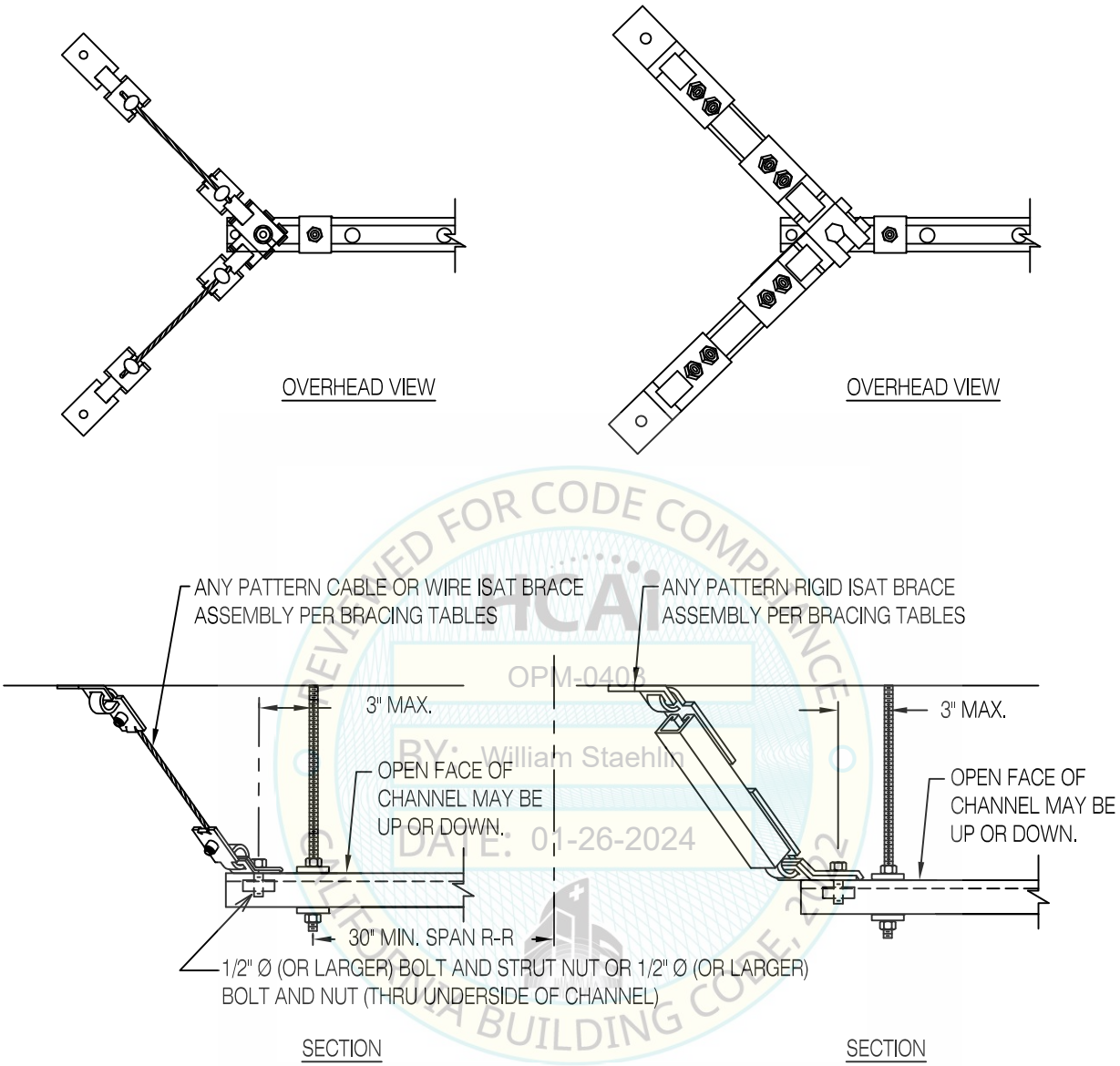

REVIEWED FOR CODE COMPLIANCE
OPM-0403
BY: William Staehlin
DATE: 01-26-2024
CALIFORNIA BUILDING CODE, 2022

MAX ALLOWED BRACE FORCE (P):
B1 SINGLE STRUT (PUNCHED) TRAPEZE ELEMENT = 1,565 LBS.
B2 B-B STRUT (PUNCHED) TRAPEZE ELEMENT = 2,100 LBS
OR PER C-SERIES BRACING TABLES, WHICHEVER IS LOWER.

NOTE: OFFSET INTRODUCES AN INCREASE IN ROD TOTAL VERTICAL LOAD OF 10%

OUTBOARD OF SUPPORT ROD FOR USE WITH CHANNEL TRAPEZE SUPPORT

ALTERNATE BRACE CONNECTION TO TRAPEZE

REGISTERED PROFESSIONAL ENGINEER MARCIN WASAZNIK S-6612 STRUCTURAL STATE OF CALIFORNIA

ISAT
A Division of Tomarco Contractor Specialties
International Seismic Application Technology
14848 Northam Street, La Mirada, CA 90638
877-999-4728 (Toll Free) 714-523-0845 (fax)
www.isatsb.com

Rev. 3
02/16/18

Page
B240.0

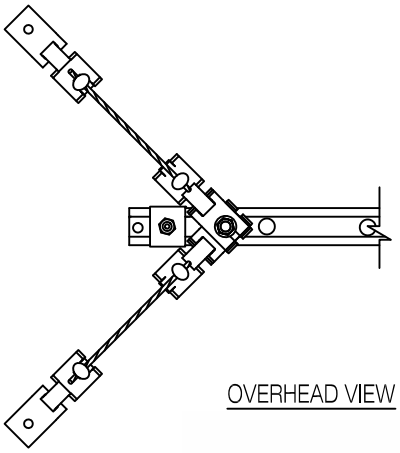

OVERHEAD VIEW

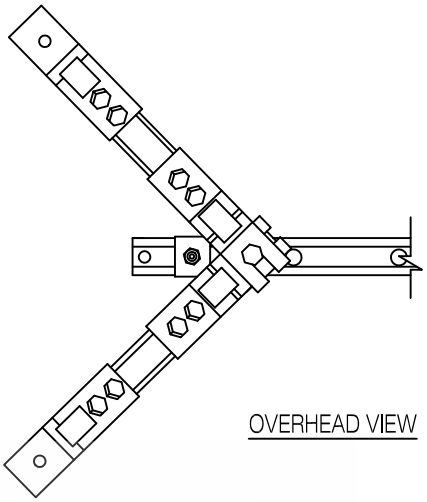

OVERHEAD VIEW

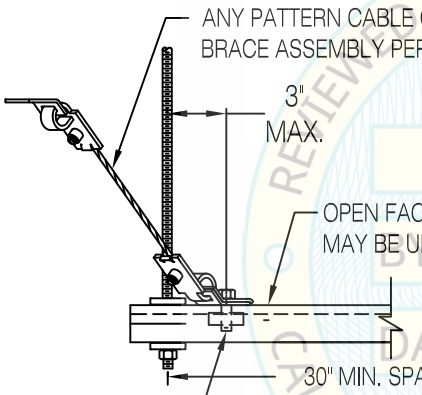

SECTION

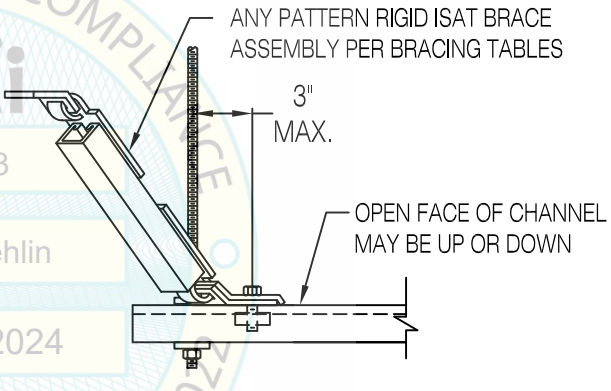

SECTION

REVIEWED FOR CODE COMPLIANCE
HCAi
OPM-0403
BY: William Staehlin
DATE: 01-26-2024
CALIFORNIA BUILDING CODE 2022

MAX ALLOWED BRACE FORCE (P):
B1 SINGLE STRUT (PUNCHED) TRAPEZE ELEMENT = 1,565 LBS.
B2 B-B STRUT (PUNCHED) TRAPEZE ELEMENT = 2,100 LBS
OR PER C-SERIES BRACING TABLES, WHICHEVER IS LOWER.

NOTE: OFFSET INTRODUCES AN INCREASE IN ROD TOTAL VERTICAL LOAD OF 10%

INBOARD OF SUPPORT ROD FOR USE WITH CHANNEL TRAPEZE SUPPORT

ALTERNATE BRACE CONNECTION TO TRAPEZE

REGISTERED PROFESSIONAL ENGINEER
MARCIN WASAZNIK
S-6612
STRUCTURAL
STATE OF CALIFORNIA

ISAT
A Division of Tomarco Contractor Specialties
International Seismic Application Technology
14848 Northam Street, La Mirada, CA 90638
877-999-4728 (Toll Free) 714-523-0845 (fax)
www.isatsb.com

Rev. 3
02/16/18

Page
B241.0

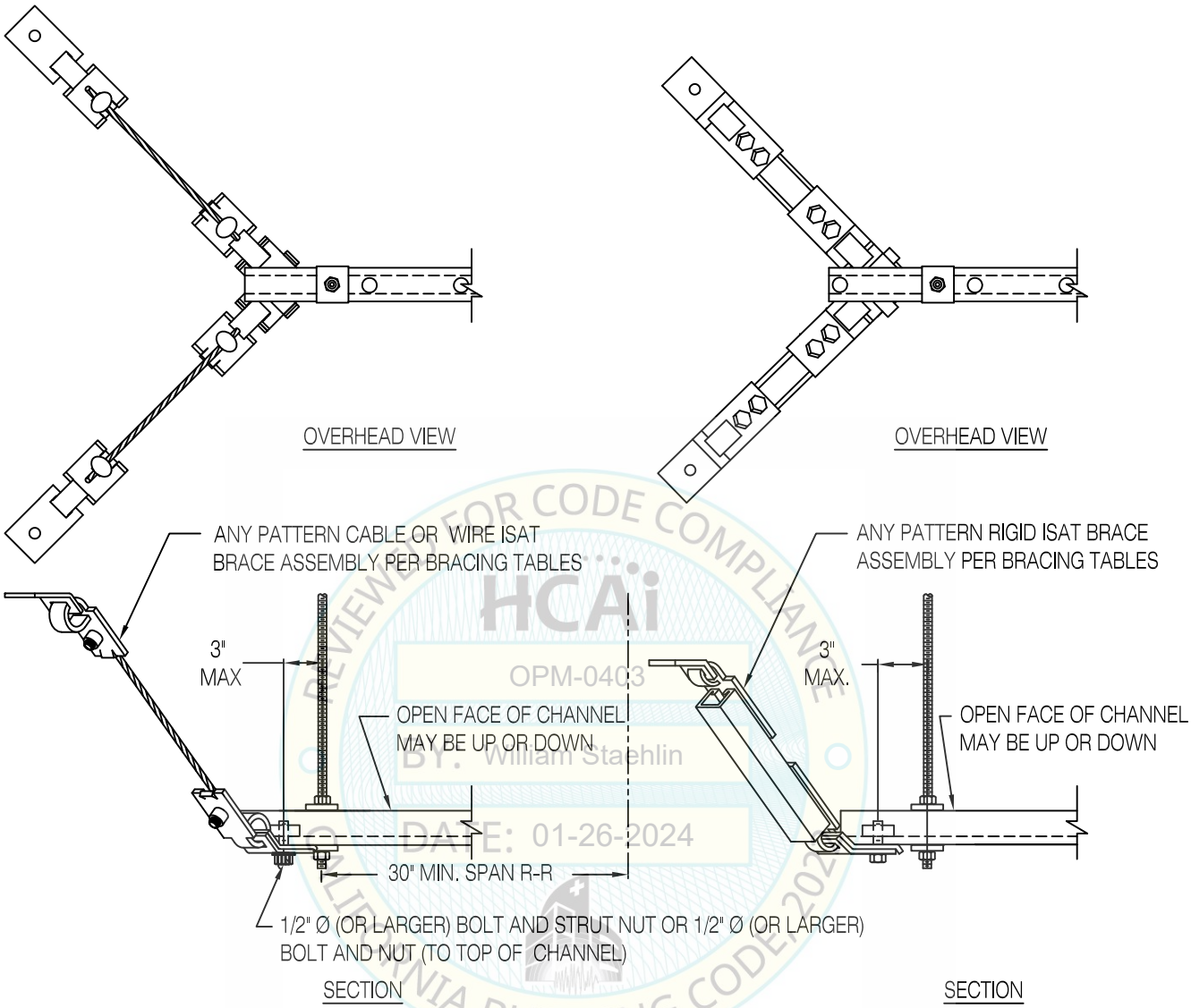

REVIEWED FOR CODE COMPLIANCE
HCAi
OPM-0403
BY: William Staehlin
DATE: 01-26-2024
CALIFORNIA BUILDING CODE 2022

MAX ALLOWED BRACE FORCE (P):
B1 SINGLE STRUT (PUNCHED) TRAPEZE ELEMENT = 1,565 LBS.
B2 B-B STRUT (PUNCHED) TRAPEZE ELEMENT = 2,100 LBS
OR PER C-SERIES BRACING TABLES, WHICHEVER IS LOWER.

NOTE: OFFSET INTRODUCES AN INCREASE IN ROD TOTAL VERTICAL LOAD OF 10%

UNDERSIDE CONNECTION OUTBOARD OF SUPPORT ROD FOR USE WITH CHANNEL TRAPEZE SUPPORT

UNDERSIDE ALTERNATE BRACE CONNECTION TO TRAPEZE

REGISTERED PROFESSIONAL ENGINEER MARCIN WASAZNIK S-6612 STRUCTURAL STATE OF CALIFORNIA

ISAT
A Division of Tomarco Contractor Specialties
International Seismic Application Technology
14848 Northam Street, La Mirada, CA 90638
877-999-4728 (Toll Free) 714-523-0845 (fax)
www.isatsb.com

Rev. 3
02/16/18

Page
B242.0

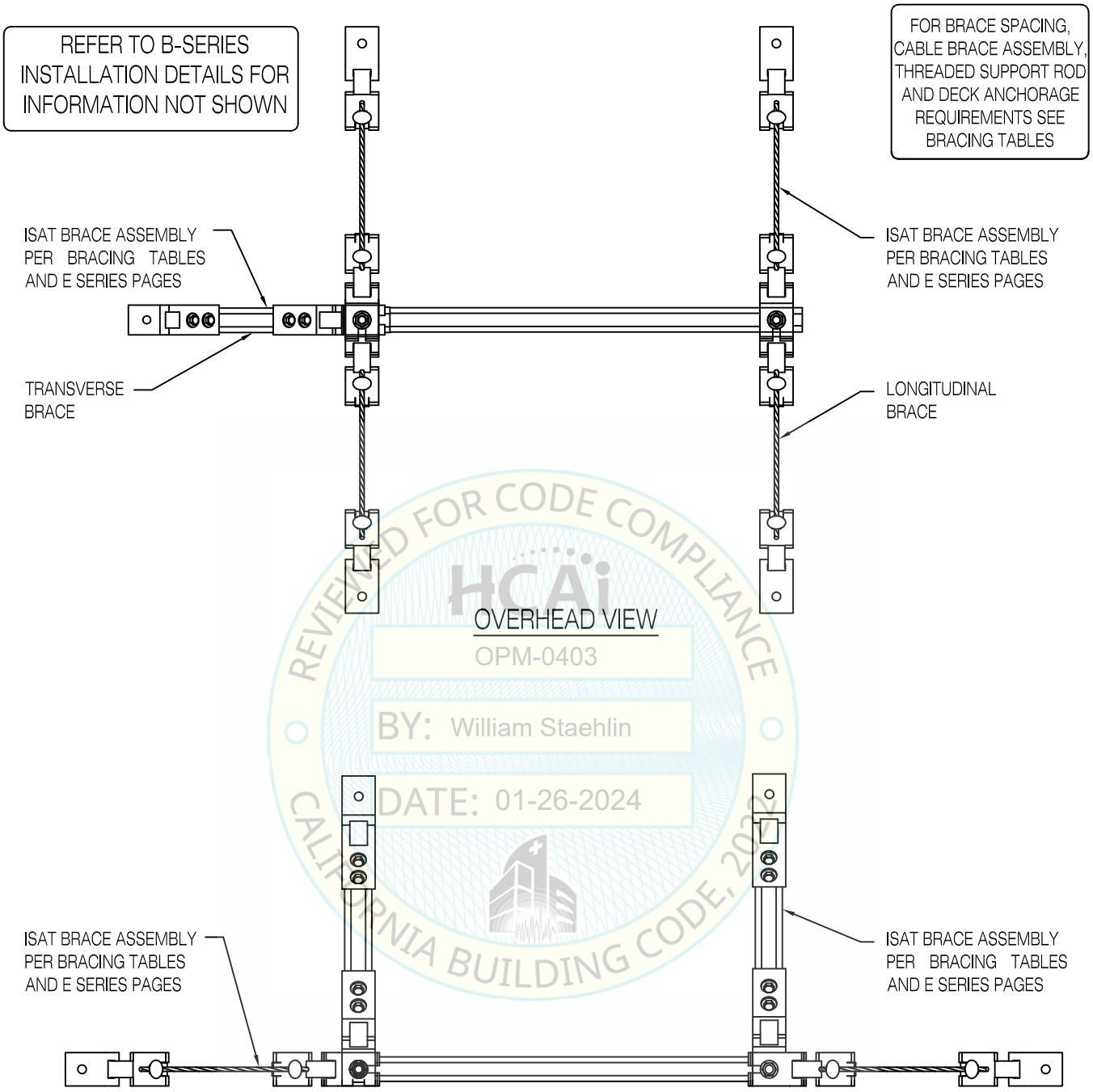

REVIEWED FOR CODE COMPLIANCE
HCAi
OPM-0403
BY: William Staehlin
DATE: 01-26-2024
CALIFORNIA BUILDING CODE, 2022

ISAT CABLE AND RIGID BRACING ASSEMBLIES MAY BE USED ON THE SAME RUN WHEN THE BRACING TYPES ARE PERPENDICULAR TO EACH OTHER

OVERHEAD VIEW

MIXED BRACING TYPES FOR TRAPEZE UTILITY

REGISTERED PROFESSIONAL ENGINEER
MARCIN WASAZNIK
S-6612
STRUCTURAL
STATE OF CALIFORNIA

ISAT
A Division of Tomarco Contractor Specialties

International Seismic Application Technology
14848 Northam Street, La Mirada, CA 90638
877-999-4728 (Toll Free) 714-523-0845 (fax)
www.isatsb.com

Rev. 2
06/12/18

Page
B243.0

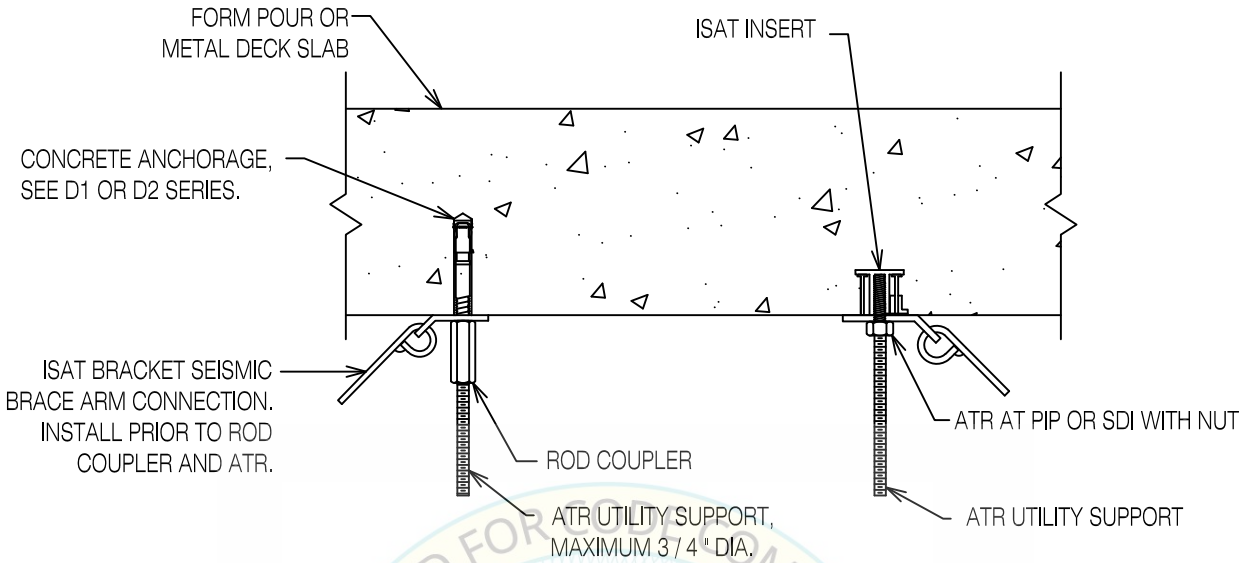

NOTE:
BRACE ARM CONNECTIONS CAN BE MADE TO GRAVITY LOAD SUPPORT ROD CONNECTIONS WHEN ENGINEERED FOR THE SPECIFIC CONDITION BY ISAT AND APPROVED BY THE ENGINEER OF RECORD.

REVIEWED FOR CODE COMPLIANCE
HCAi
OPM-0403
BY: William Staehlin
DATE: 01/26/2024
CALIFORNIA BUILDING CODE, 2022

ISAT INSERTS

ONLY SUITABLE WITH LARGEST ROD DIAMETER FOR THE INSERT SIZE.

FOR FORM POUR:	PUSH ROD PRPIP3812, PAGE F10.0 BBH PIP143812, PAGE F10.1 BBH PIP381258, PAGE F10.2 BBH PIP5834, PAGE F10.3
FOR METAL DECK:	PUSH ROD PRSDI3812, PAGE F11.0 BBH SDI143812, PAGE F11.1 BBH SDI381258, PAGE F11.2 BBH SDI381258-SQX, PAGE F11.2.1 BBH SDI5834, PAGE 11.3

ALTERNATE BRACE CONNECTION TO VERTICAL SUPPORT ROD ANCHORAGE

REGISTERED PROFESSIONAL ENGINEER
MARCIN WASAZNIK
S-6612
STRUCTURAL
STATE OF CALIFORNIA

ISAT
A Division of Tomarco Contractor Specialties
International Seismic Application Technology
14848 Northam Street, La Mirada, CA 90638
877-999-4728 (Toll Free) 714-523-0845 (fax)
www.isatsb.com

Rev. 3
02/16/18

Page
B244.0

FOR BRACE SPACING, CABLE BRACE ASSEMBLY, THREADED SUPPORT ROD AND DECK ANCHORAGE REQUIREMENTS SEE BRACING TABLES

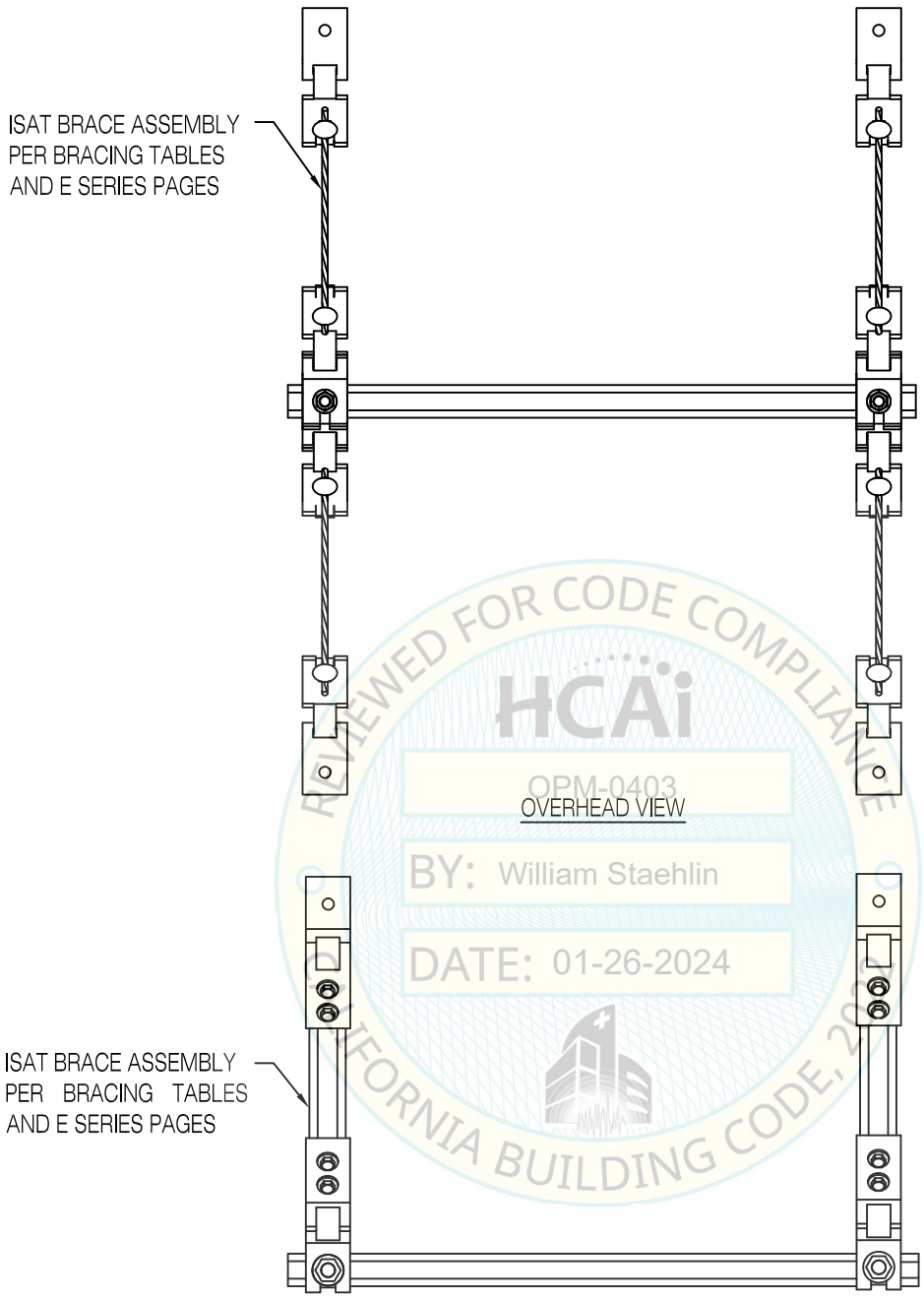

REVIEWED FOR CODE COMPLIANCE
HCAi
OPM-0403
BY: William Staehlin
DATE: 01-26-2024
CALIFORNIA BUILDING CODE, 2022

OVERHEAD VIEW

MAY BE LOCATED AT DIFFERENT VERTICAL SUPPORTS.
LOCATION AT THE SAME VERTICAL SUPPORT ROD IS NOT REQUIRED.

LONGITUDINAL RIGID AND CABLE BRACING FOR TRAPEZE UTILITY

REGISTERED PROFESSIONAL ENGINEER
MARCIN WASAZNIK
S-6612
STRUCTURAL
STATE OF CALIFORNIA

ISAT
A Division of Tomarco Contractor Specialties

International Seismic Application Technology
14848 Northam Street, La Mirada, CA 90638
877-999-4728 (Toll Free) 714-523-0845 (fax)
www.isatsb.com

Rev. 2
06/12/18

Page
B246.0

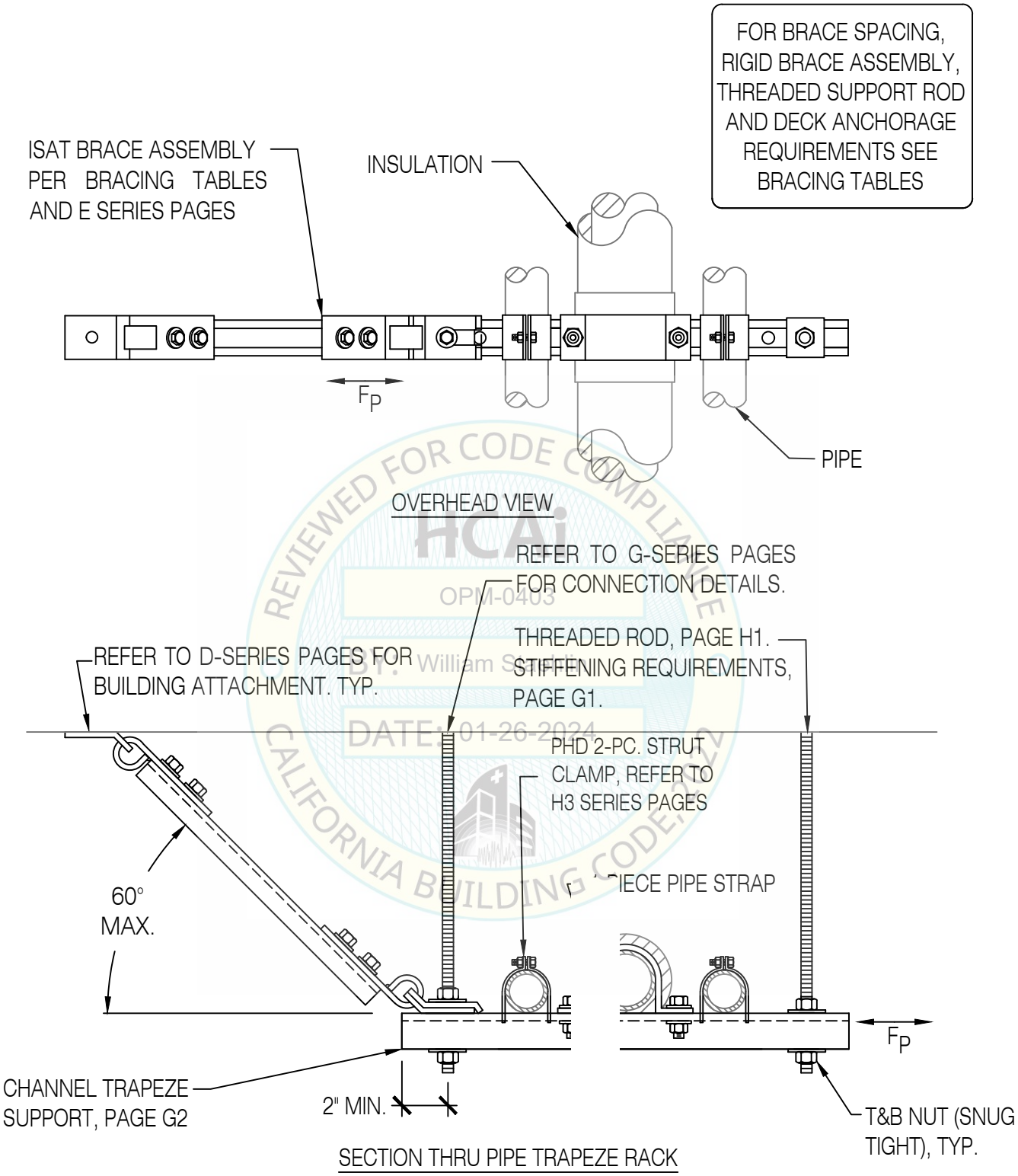

REVIEWED FOR CODE COMPLIANCE
HCAi
OPM-0403
Dr. William Staehlin
DATE: 01-26-2024
CALIFORNIA BUILDING CODE

ALTERNATE MOUNTING DETAIL FOR INSULATED PIPE

REGISTERED PROFESSIONAL ENGINEER
MARCIN WASAZNIK
S-6612
STRUCTURAL
STATE OF CALIFORNIA

ISAT
A Division of Tomarco Contractor Specialties

International Seismic Application Technology
14848 Northam Street, La Mirada, CA 90638
877-999-4728 (Toll Free) 714-523-0845 (fax)
www.isatsb.com

Rev. 3
06/26/18

Page
B250.0

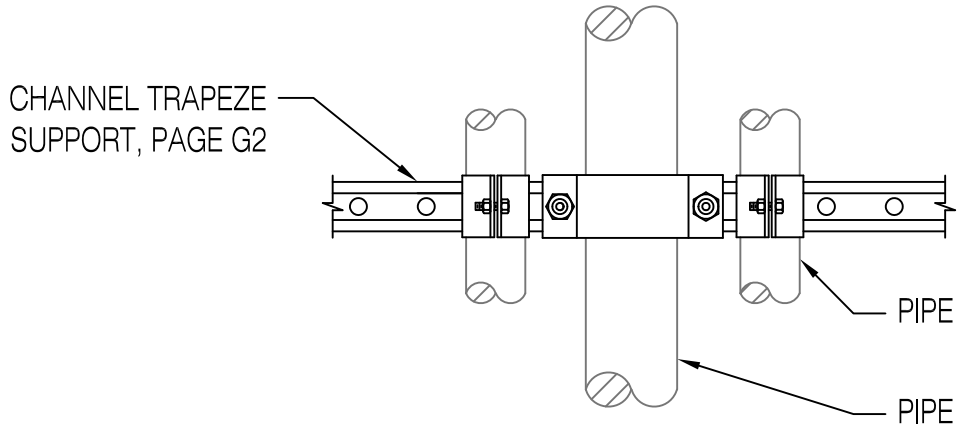

OVERHEAD VIEW
TOP OF STRUT

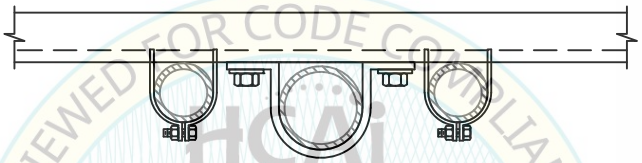

SECTION THRU PIPE OR CONDUIT TRAPEZE RACK
OPTION 1 - BOTTOM OF STRUT

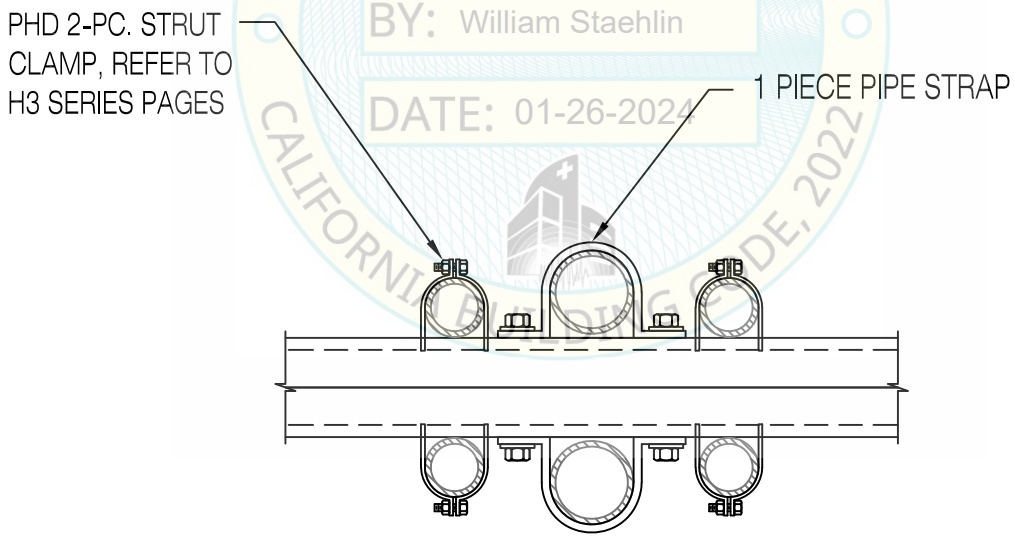

SECTION THRU PIPE OR CONDUIT TRAPEZE RACK
OPTION 2 - BOTTOM AND TOP OF STRUT

REVIEWED FOR CODE COMPLIANCE
HCAi
OPM-0403
BY: William Staehlin
DATE: 01-26-2024
CALIFORNIA BUILDING CODE, 2022

PIPE OR CONDUIT TRAPEZE RACK
ALTERNATE SUPPORT CONFIGURATIONS AT SEISMIC LOCATIONS

REGISTERED PROFESSIONAL ENGINEER
MARCIN WASAZNIK
S-6612
STRUCTURAL
STATE OF CALIFORNIA

ISAT
A Division of Tomarco Contractor Specialties
International Seismic Application Technology
14848 Northam Street, La Mirada, CA 90638
877-999-4728 (Toll Free) 714-523-0845 (fax)
www.isatsb.com

Rev. 3
06/12/18

Page
B251.0

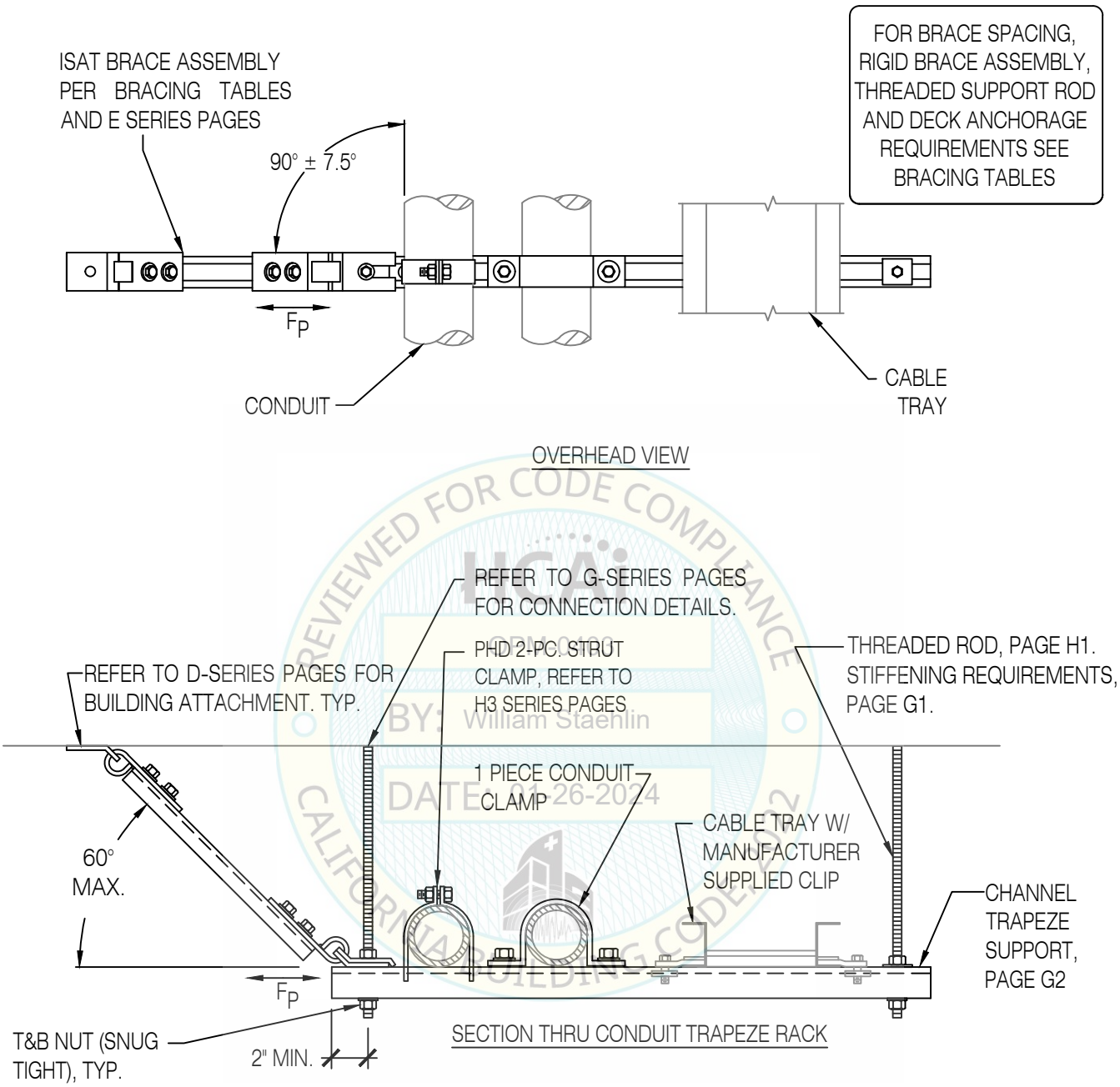

REVIEWED FOR CODE COMPLIANCE
HCAI
BY: William Staehlin
DATE: 01-26-2024
CALIFORNIA BUILDING CODE 2

SINGLE RIGID TRANSVERSE BRACE (SHOWN). SUITABLE WHERE CABLE TRAY LOADING (LBS/LF) DOES NOT EXCEED 1.30 X AGGREGATE CONDUIT LOAD (LBS/LF). OTHERWISE INSTALL TRANSVERSE BRACING ON BOTH RODS.

CONDUIT AND CABLE TRAY ON SAME TRAPEZE RACK
TYPICAL FOR ALL BRACING TYPES AND CONFIGURATIONS

REGISTERED PROFESSIONAL ENGINEER MARCIN WASAZNIK S-6612 STRUCTURAL STATE OF CALIFORNIA

ISAT
A Division of Tomarco Contractor Specialties
International Seismic Application Technology
14848 Northam Street, La Mirada, CA 90638
877-999-4728 (Toll Free) 714-523-0845 (fax)
www.isatsb.com

Rev. 3
06/26/18

Page
B252.0

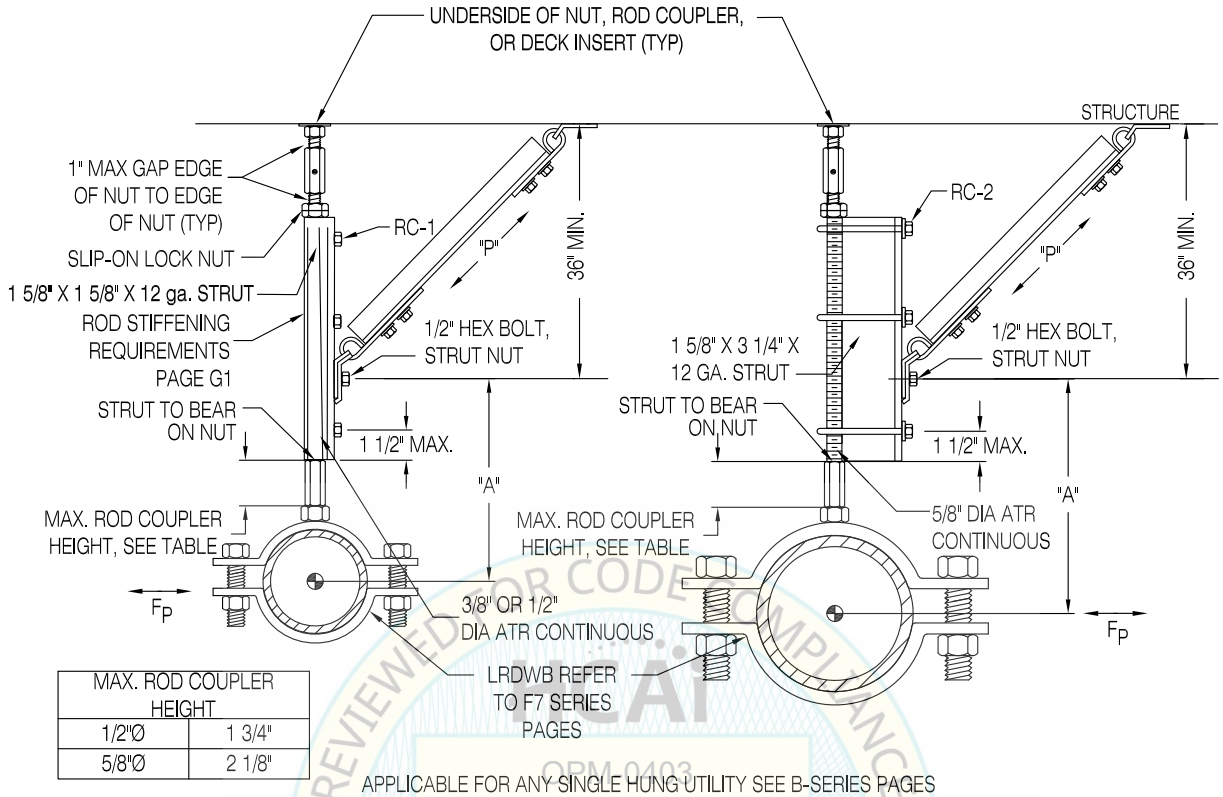

MAX. ROD COUPLER HEIGHT	
1/2"Ø	1 3/4"
5/8"Ø	2 1/8"

Max. Dim.	Maximum Brace Load "P" Per Rod Diameter (45° Max. Brace Angle From Horizontal)			
"A"	1/2"		5/8"	
Inch	Max. Lateral Force at Utility (F_p) Lbs.	Maximum Brace Force (P) Lbs.	Max. Lateral Force at Utility Lbs.	Maximum Brace Force Lbs.
4	850	1335	925	1454
5	680	1095	903	1454
6	566	934	881	1454
9	378	667	823	1454
12	283	534	N/A	N/A
15	227	454	N/A	N/A
18	189	400	N/A	N/A

1 WAY RIGID BRACE, TRANSVERSE OR LONGITUDINAL LOCATION

SINGLE HUNG UTILITY ELEVATED BRACE ARM ATTACHMENT
MINIMUM 36 INCHES BELOW DECK

REGISTERED PROFESSIONAL ENGINEER MARCIN WASAZNIK S-6612 STRUCTURAL STATE OF CALIFORNIA

ISAT A Division of Tomarco Contractor Specialties

International Seismic Application Technology
14848 Northam Street, La Mirada, CA 90638
877-999-4728 (Toll Free) 714-523-0845 (fax)
www.isatsb.com

Rev. 10
10/18/18

Page
B280.0

REVIEWED FOR CODE COMPLIANCE BY: William Staehlin DATE: 01-26-2024 OPM-0403 CALIFORNIA BUILDING CODE

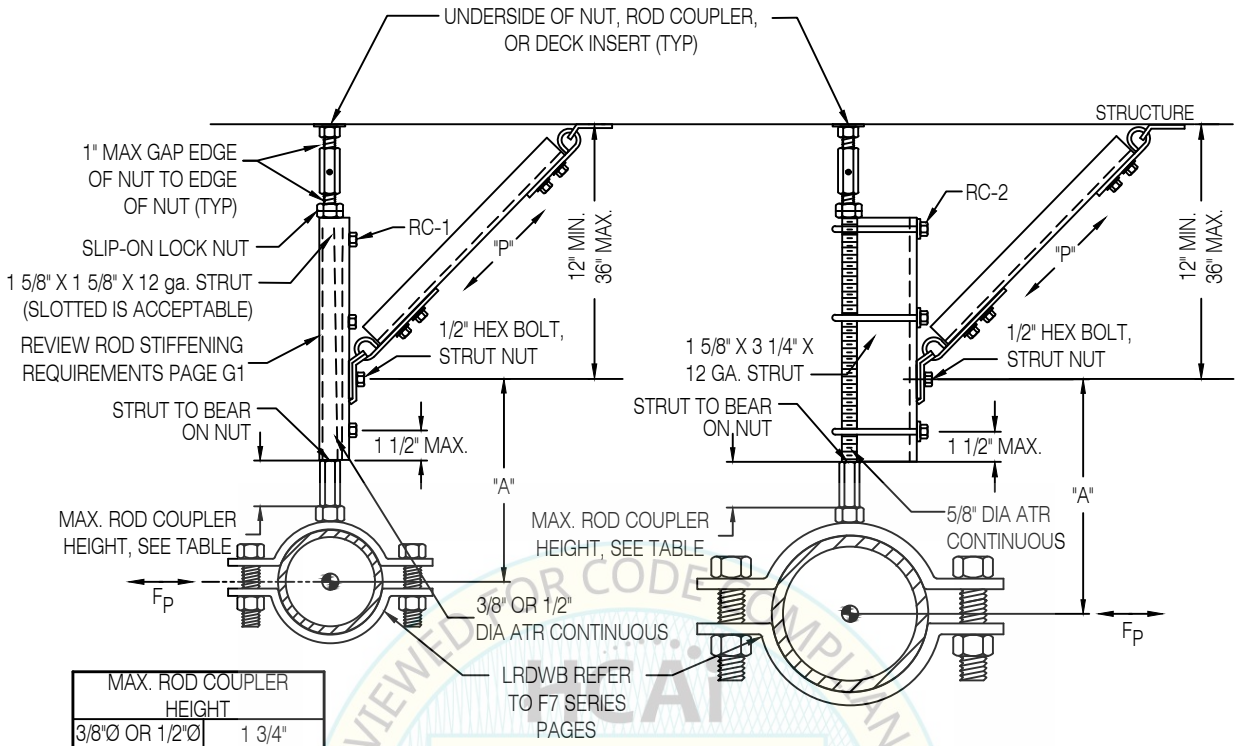

MAX. ROD COUPLER HEIGHT	
3/8"Ø OR 1/2"Ø	1 3/4"
5/8"Ø	2 1/8"

APPLICABLE FOR ANY SINGLE HUNG UTILITY SEE B-SERIES PAGES

REVIEWED FOR CODE COMPLIANCE
IICAI
OPM-0403
BY: William Staehlin
DATE: 01-26-2024
CALIFORNIA BUILDING CODE, 2022

Max. Dim.	Maximum Brace Load (ASD) "P" Per Rod Diameter (45° Max. Brace Angle From Horizontal)					
"A"	3/8"		1/2"		5/8"	
Inch	Max. Lateral Force at Utility (F_p) Lbs.	Maximum Brace Force (P) Lbs.	Max. Lateral Force at Utility (F_p) Lbs.	Maximum Brace Force (P) Lbs.	Max. Lateral Force at Utility Lbs.	Maximum Brace Force Lbs.
7	96	215	225	503	389	871
9	75	187	177	437	303	749
12	57	161	133	375	227	642
15	46	146	106	337	182	578
18	38	135	88	312	151	535

1 WAY RIGID BRACE, TRANSVERSE OR LONGITUDINAL LOCATION

SINGLE HUNG UTILITY ELEVATED BRACE ARM ATTACHMENT
MAXIMUM 36 INCHES TO MINIMUM 12 INCHES BELOW DECK

REGISTERED PROFESSIONAL ENGINEER MARCIN WASAZNIK S 6612 STRUCTURAL STATE OF CALIFORNIA

ISAT
A Division of Tomarco Contractor Specialties

International Seismic Application Technology
14848 Northam Street, La Mirada, CA 90638
877-999-4728 (Toll Free) 714-523-0845 (fax)
www.isatsb.com

Rev. 0
06/12/23

Page
B281.0

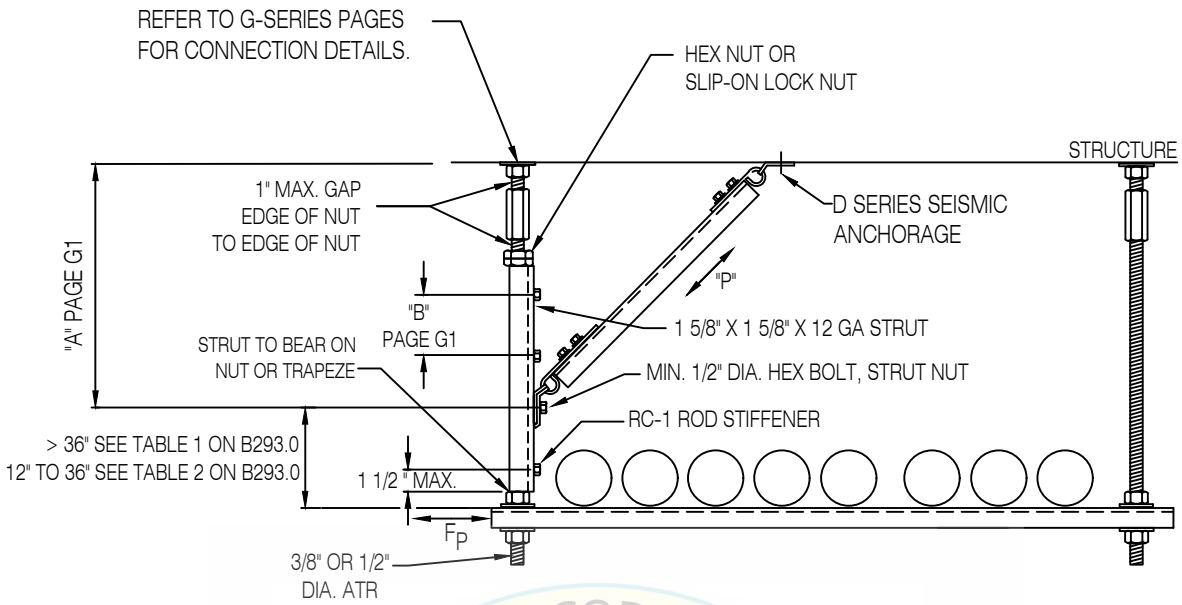

NOTE: SUITABLE FOR OUTBOARD OR INBOARD INSTALLATION. (INBOARD SHOWN).

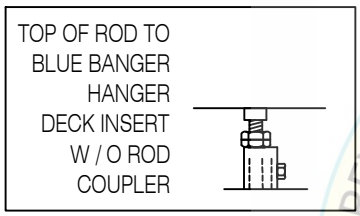

REVIEWED FOR CODE COMPLIANCE
HCAi
OPM-0403
BY: William Staehlin
DATE: 01-26-2024
CALIFORNIA BUILDING CODE, 2022

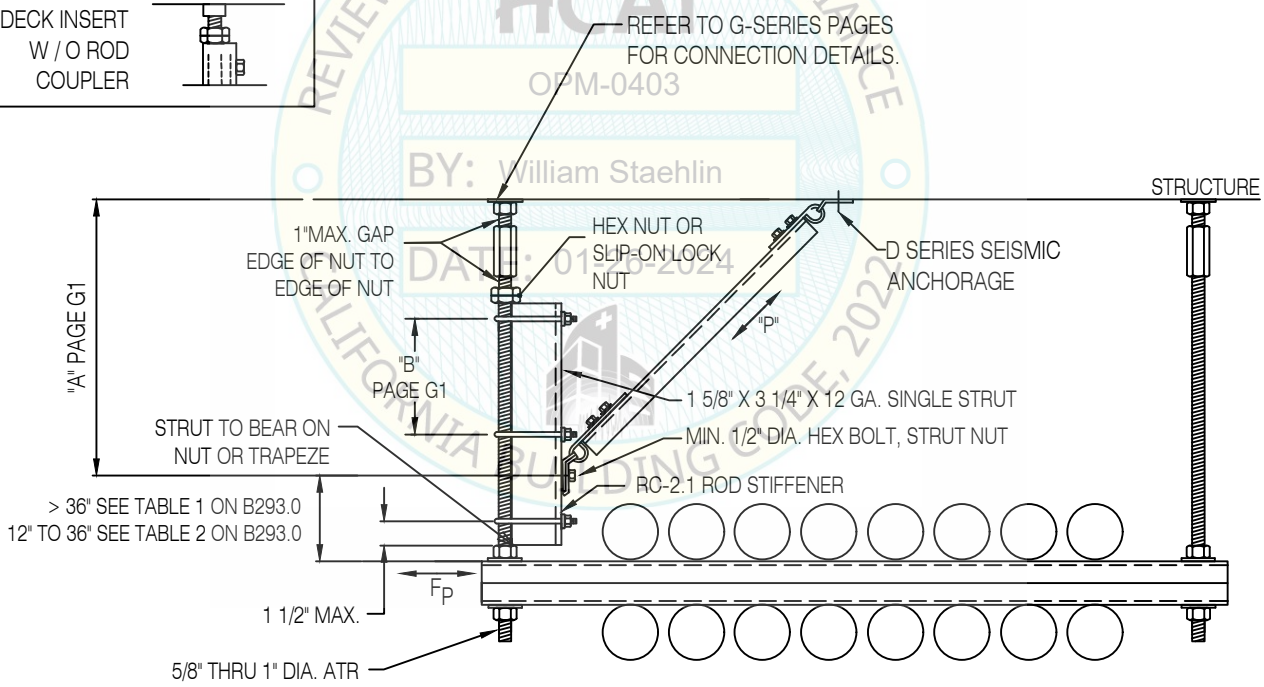

NOTE: SUITABLE FOR OUTBOARD OR INBOARD INSTALLATION. (INBOARD SHOWN).

ELEVATED BRACE ARM ATTACHMENT - TRAPEZE RACKS
1 - WAY RIGID TRANSVERSE

REGISTERED PROFESSIONAL ENGINEER
MARCIN WASAZNIK
S 6612
STRUCTURAL
STATE OF CALIFORNIA

ISAT
A Division of Tomarco Contractor Specialties
International Seismic Application Technology
14848 Northam Street, La Mirada, CA 90638
877-999-4728 (Toll Free) 714-523-0845 (fax)
www.isatsb.com

Rev. 7
08/30/23

Page
B290.0

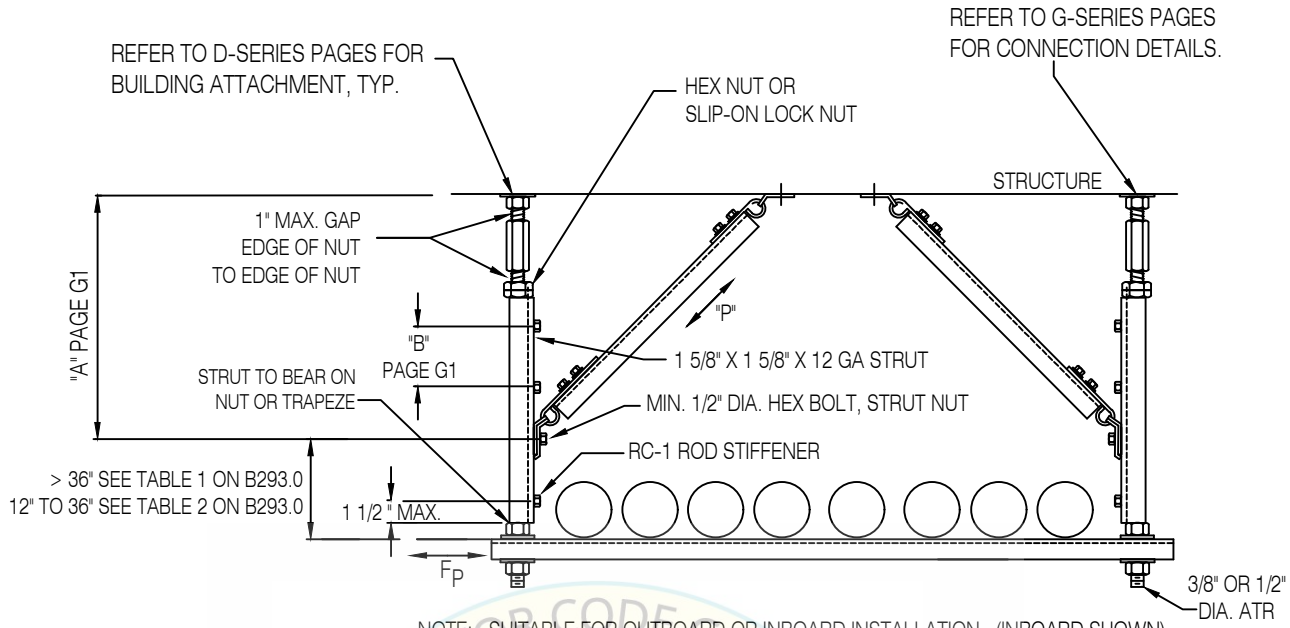

NOTE: SUITABLE FOR OUTBOARD OR INBOARD INSTALLATION. (INBOARD SHOWN).
ANY PATTERN (TRANSVERSE, LONGITUDINAL INSTALLATION)

TOP OF ROD TO BLUE BANGER HANGER DECK INSERT W / O ROD COUPLER

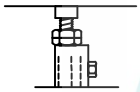

REVIEWED FOR CODE COMPLIANCE
HCAi
OPM-0403
BY: William Staehlin
DATE: 01-26-2024
CALIFORNIA BUILDING CODE, 2022

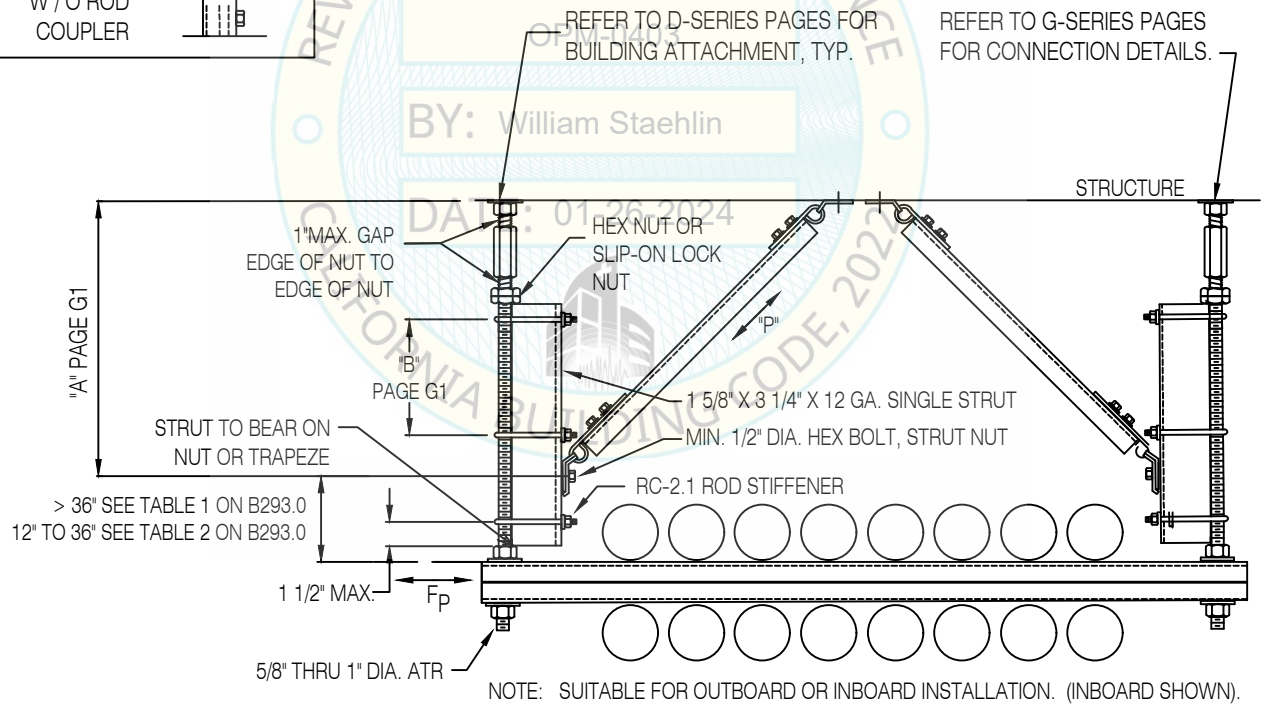

NOTE: SUITABLE FOR OUTBOARD OR INBOARD INSTALLATION. (INBOARD SHOWN).
ANY PATTERN (TRANSVERSE, LONGITUDINAL INSTALLATION)

ELEVATED BRACE ARM ATTACHMENT - TRAPEZE RACKS
2 - WAY RIGID TRANSVERSE OR LONGITUDINAL LOCATION

REGISTERED PROFESSIONAL ENGINEER MARCIN WASAZNIK S-6612 STRUCTURAL STATE OF CALIFORNIA

ISAT
A Division of Tomarco Contractor Specialties
International Seismic Application Technology
14848 Northam Street, La Mirada, CA 90638
877-999-4728 (Toll Free) 714-523-0845 (fax)
www.isatsb.com

Rev. 7
08/30/23

Page
B291.0

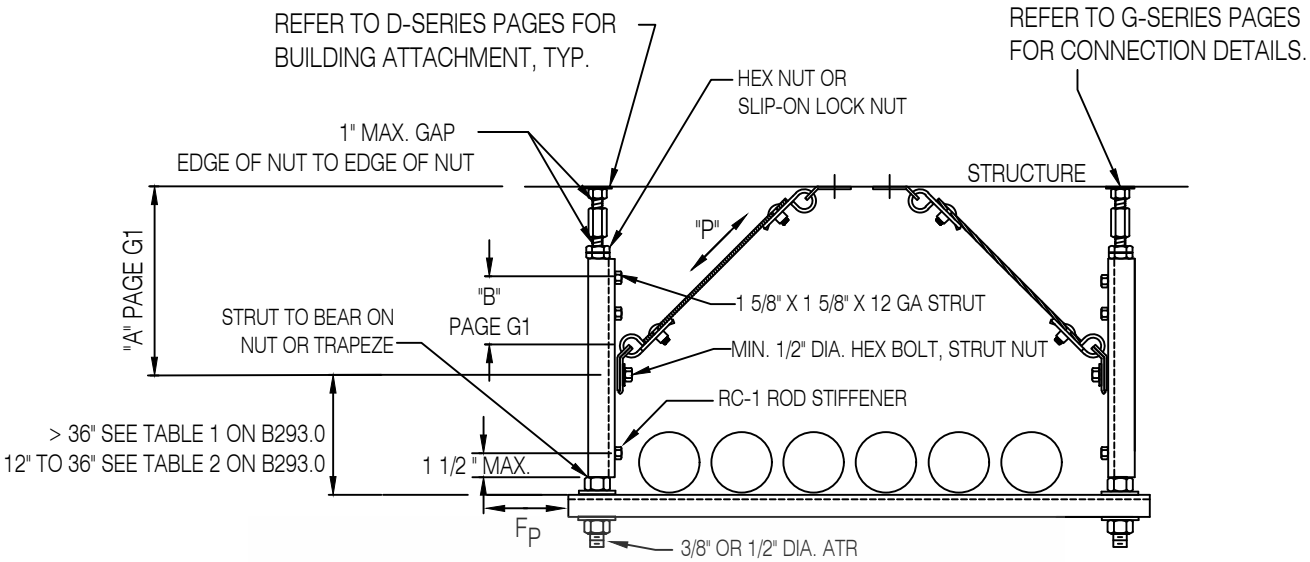

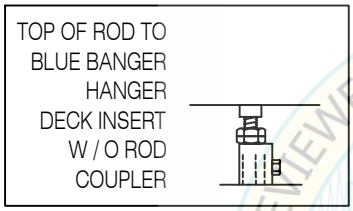

REVIEWED FOR CODE COMPLIANCE
HCAi
OPM-0403
BY: William Staehlin
DATE: 01-26-2024
CALIFORNIA BUILDING CODE, 2022

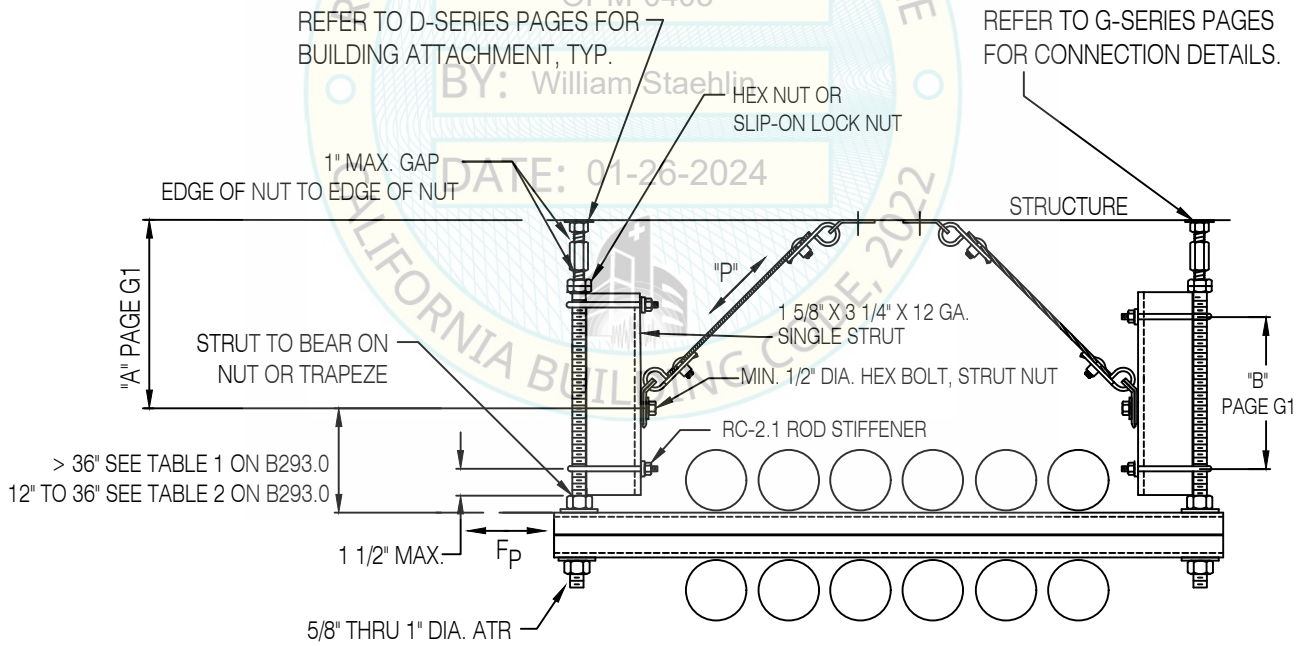

NOTE: SUITABLE FOR OUTBOARD OR INBOARD INSTALLATION. (INBOARD SHOWN).
ANY PATTERN (TRANSVERSE, LONGITUDINAL INSTALLATION)

ELEVATED BRACE ARM ATTACHMENT - TRAPEZE RACKS

REGISTERED PROFESSIONAL ENGINEER MARCIN WASAZNIK S-6612 STRUCTURAL STATE OF CALIFORNIA

ISAT
A Division of Tomarco Contractor Specialties
International Seismic Application Technology
14848 Northam Street, La Mirada, CA 90638
877-999-4728 (Toll Free) 714-523-0845 (fax)
www.isatsb.com

Rev. 7
1/23/24

Page
B292.0

TABLE 1
DESIGN VALUES FOR ELEVATED BRACE ARM ATTACHMENT
MINIMUM 36 INCHES BELOW DECK

MAXIMUM BRACE LOAD "P" PER ROD DIAMETER (45° MAX. BRACE ANGLE FROM HORIZONTAL)												
	3/8"				1/2"				≥ 5/8"			
Maximum Dim. "A" Inch	Maximum Lateral Force at Utility Lbs.	Max. Brace Force Lbs.	Minimum Rigid Brace Arm Assembly Pg. E1.1	Minimum Cable Brace Arm Assembly Pg. E3.1	Maximum Lateral Force at Utility Lbs.	Max. Brace Force Lbs.	Minimum Rigid Brace Arm Assembly Pg. E1.1	Minimum Cable Brace Arm Assembly Pg. E3.1	Maximum Lateral Force at Utility Lbs.	Max. Brace Force Lbs.	Minimum Rigid Brace Arm Assembly Pg. E1.1	Minimum Cable Brace Arm Assembly Pg. E3.1
4	850	1,335	R12AAB2P12	C12AA06WC	850	1,335	R12AAB2P12	C12AA06WC	925	1,454	R12AAB2P12	C12AA06WC
5	680	1,095	R12AAEM609	C12AA06WC	680	1,095	R12AAEM609	C12AA06WC	903	1,454	R12AAB2P12	C12AA06WC
6	566	934	R12AAB1S09	C12AA06WC	566	934	R12AAB1S09	C12AA06WC	881	1,454	R12AAB2P12	C12AA06WC
9	378	667	R12AAEM509	C12AA06WC	378	667	R12AAEM509	C12AA06WC	823	1,454	R12AAB2P12	C12AA06WC
12	283	534	R12AAEM509	C12AA06WC	283	534	R12AAEM509	C12AA06WC	747	1,409	R12AAB2P12	C12AA06WC
15	227	454	R12AAA1S07	C12AA06WC	227	454	R12AAA1S07	C12AA06WC	598	1,198	R12AAB2P12	C12AA06WC
18	189	400	R12AAA1S07	C12AA06WC	189	400	R12AAA1S07	C12AA06WC	498	1,057	R12AAEM609	C12AA06WC

MAXIMUM BRACE LOAD "P" PER ROD DIAMETER (45° MAX. BRACE ANGLE FROM HORIZONTAL)												
	3/8"				1/2"				≥ 5/8"			
Maximum Dim. "A" Inch	Maximum Lateral Force at Utility Lbs.	Max. Brace Force Lbs.	Minimum Rigid Brace Arm Assembly Pg. E1.2	Minimum Cable Brace Arm Assembly Pg. E3.1	Maximum Lateral Force at Utility Lbs.	Max. Brace Force Lbs.	Minimum Rigid Brace Arm Assembly Pg. E1.2	Minimum Cable Brace Arm Assembly Pg. E3.1	Maximum Lateral Force at Utility Lbs.	Max. Brace Force Lbs.	Minimum Rigid Brace Arm Assembly Pg. E1.2	Minimum Cable Brace Arm Assembly Pg. E3.1
4	850	1,335	R12CFB1S06	C12CF06WS	850	1,335	R12CFB1S06	C12CF06WS	925	1,454	R12BEB2P12	C12CF06WS
5	680	1,095	R12CFB1P06	C12CF06WS	680	1,095	R12CFB1P06	C12CF06WS	903	1,454	R12BEB2P12	C12CF06WS
6	566	934	R12CFB1S09	C12CF06WS	566	934	R12CFB1S09	C12CF06WS	881	1,454	R12BEB2P12	C12CF06WS
9	378	667	R12CFB1P09	C12CF06WS	378	667	R12CFB1P09	C12CF06WS	823	1,454	R12BEB2P12	C12CF06WS
12	283	534	R12CFB1P09	C12CF06WS	283	534	R12CFB1P09	C12CF06WS	747	1,409	R12CFB1S06	C12CF06WS
15	227	454	R12CFB1P09	C12CF06WS	227	454	R12CFB1P09	C12CF06WS	598	1,198	R12CFB1P06	C12CF06WS
18	189	400	R12CFA1P07	C12CF06WS	189	400	R12CFA1P07	C12CF06WS	498	1,057	R12CFB1P06	C12CF06WS

TABLE 2
DESIGN VALUES FOR ELEVATED BRACE ARM ATTACHMENT
MAXIMUM 36 INCHES TO MINIMUM 12 INCHES BELOW DECK

BY: William Staehlin
DATE: 01-26-2024

MAXIMUM BRACE LOAD "P" PER ROD DIAMETER (45° MAX. BRACE ANGLE FROM HORIZONTAL)												
	3/8"				1/2"				≥ 5/8"			
Maximum Dim. "A" Inch	Maximum Lateral Force at Utility Lbs.	Max. Brace Force Lbs.	Minimum Rigid Brace Arm Assembly Pg. E1.1	Minimum Cable Brace Arm Assembly Pg. E3.1	Maximum Lateral Force at Utility Lbs.	Max. Brace Force Lbs.	Minimum Rigid Brace Arm Assembly Pg. E1.1	Minimum Cable Brace Arm Assembly Pg. E3.1	Maximum Lateral Force at Utility Lbs.	Max. Brace Force Lbs.	Minimum Rigid Brace Arm Assembly Pg. E1.1	Minimum Cable Brace Arm Assembly Pg. E3.1
4	462	726	R12AAEM509	C12AA06WC	462	726	R12AAEM509	C12AA06WC	771	1,454	R12AAB2P12	C12AA06WC
5	382	615	R12AAEM509	C12AA06WC	382	615	R12AAEM509	C12AA06WC	726	1,454	R12AAB2P12	C12AA06WC
6	328	541	R12AAEM509	C12AA06WC	328	541	R12AAEM509	C12AA06WC	685	1,454	R12AAB2P12	C12AA06WC
9	229	405	R12AAA1S07	C12AA06WC	229	405	R12AAA1S07	C12AA06WC	588	1,454	R12AAB2P12	C12AA06WC

MAXIMUM BRACE LOAD "P" PER ROD DIAMETER (45° MAX. BRACE ANGLE FROM HORIZONTAL)												
	3/8"				1/2"				≥ 5/8"			
Maximum Dim. "A" Inch	Maximum Lateral Force at Utility Lbs.	Max. Brace Force Lbs.	Minimum Rigid Brace Arm Assembly Pg. E1.2	Minimum Cable Brace Arm Assembly Pg. E3.1	Maximum Lateral Force at Utility Lbs.	Max. Brace Force Lbs.	Minimum Rigid Brace Arm Assembly Pg. E1.2	Minimum Cable Brace Arm Assembly Pg. E3.1	Maximum Lateral Force at Utility Lbs.	Max. Brace Force Lbs.	Minimum Rigid Brace Arm Assembly Pg. E1.2	Minimum Cable Brace Arm Assembly Pg. E3.1
4	462	726	R12CFB1P09	C12CF06WS	462	726	R12CFB1P09	C12CF06WS	771	1,454	R12BEB2P12	C12CF06WS
5	382	615	R12CFB1P09	C12CF06WS	382	615	R12CFB1P09	C12CF06WS	726	1,454	R12BEB2P12	C12CF06WS
6	328	541	R12CFB1P09	C12CF06WS	328	541	R12CFB1P09	C12CF06WS	685	1,454	R12BEB2P12	C12CF06WS
9	229	405	R12CFA1P07	C12CF06WS	229	405	R12CFA1P07	C12CF06WS	588	1,454	R12BEB2P12	C12CF06WS

PAGE B290.0 1 - WAY RIGID BRACE, TRANSVERSE OR LONGITUDINAL INSTALLATION
PAGE B291.0 2 - WAY RIGID BRACE, TRANSVERSE OR LONGITUDINAL INSTALLATION
PAGE B292.0 2 - CABLE BRACE, TRANSVERSE OR LONGITUDINAL INSTALLATION

REGISTERED PROFESSIONAL ENGINEER
MARCIN WASAZNIK
S 6612
STRUCTURAL
STATE OF CALIFORNIA

ISAT
A Division of Tomarco Contractor Specialties

International Seismic Application Technology
14848 Northam Street, La Mirada, CA 90638
877-999-4728 (Toll Free) 714-523-0845 (fax)
www.isatsb.com

INDEX - SEISMIC BRACING TABLES

PAGE	DESCRIPTION
	DESIGN SEISMIC FORCES G = [0.25, 0.50, 0.75, 1.0]
	BRACE ANGLE A = [30°, 45°, 60°]
	SINGLE HUNG PIPE (COPPER)
C9-G-A	TRANSVERSE, LONGITUDINAL RIGID BRACING
C10-G-A	TRANSVERSE, LONGITUDINAL CABLE BRACING
	SINGLE HUNG PIPE (STEEL SCH 40)
C11-G-A	TRANSVERSE, LONGITUDINAL RIGID BRACING
C12-G-A	TRANSVERSE, LONGITUDINAL CABLE BRACING
	SINGLE HUNG PIPE (NO-HUB CAST IRON)
C13-G-A	TRANSVERSE, LONGITUDINAL RIGID BRACING
C14-G-A	TRANSVERSE, LONGITUDINAL CABLE BRACING
	TRAPEZE SUPPORTED PIPING; 2-ROD VERTICAL SUPPORT
C15-G-A	TRANSVERSE, LONGITUDINAL RIGID BRACING
C16-G-A	TRANSVERSE, LONGITUDINAL CABLE BRACING
C17-G-A	4-WAY SPLAYED RIGID BRACING
C18-G-A	4-WAY SPLAYED CABLE BRACING
	TRAPEZE SUPPORTED PIPING; 3-ROD VERTICAL SUPPORT
C19-G-A	TRANSVERSE, LONGITUDINAL RIGID BRACING
C20-G-A	TRANSVERSE, LONGITUDINAL CABLE BRACING
	TRAPEZE SUPPORTED HVAC DUCT; 2-ROD VERTICAL SUPPORT
C21-G-A	TRANSVERSE, LONGITUDINAL RIGID BRACING
C22-G-A	TRANSVERSE, LONGITUDINAL CABLE BRACING
C23-G-A	4-WAY SPLAYED RIGID BRACING
C24-G-A	4-WAY SPLAYED CABLE BRACING
	SUSPENDED EQUIPMENT
C27-G-A	TRANSVERSE, LONGITUDINAL & 4-WAY SPLAYED RIGID BRACING
C28-G-A	4-WAY SPLAYED CABLE
	SINGLE HUNG PIPE (CONDUIT)
C31-G-A	TRANSVERSE, LONGITUDINAL RIGID BRACING
C32-G-A	TRANSVERSE, LONGITUDINAL CABLE BRACING
	TRAPEZE SUPPORTED ELECTRICAL RACEWAYS; 2-ROD VERTICAL SUPPORT (CONDUIT, CABLE TRAY, BUS DUCT)
C33-G-A	TRANSVERSE, LONGITUDINAL RIGID BRACING
C34-G-A	TRANSVERSE, LONGITUDINAL CABLE BRACING
C35-G-A	4-WAY SPLAYED RIGID BRACING
C36-G-A	4-WAY SPLAYED CABLE BRACING
	TRAPEZE SUPPORTED ELECTRICAL RACEWAYS; 3-ROD VERTICAL SUPPORT (CONDUIT, CABLE TRAY, BUS DUCT)
C37-G-A	TRANSVERSE, LONGITUDINAL RIGID BRACING
C38-G-A	TRANSVERSE, LONGITUDINAL CABLE BRACING
C61	STEEL PIPE SCH. 40 - ALLOWABLE TRANSVERSE BRACE SPACING TABLES
C62	STEEL PIPE SCH. 80 - ALLOWABLE TRANSVERSE BRACE SPACING TABLES
C63	EMT - ALLOWABLE TRANSVERSE & LONGITUDINAL BRACE SPACING TABLES
C64	IMC - ALLOWABLE TRANSVERSE & LONGITUDINAL BRACE SPACING TABLES
C64	RMC - ALLOWABLE TRANSVERSE & LONGITUDINAL BRACE SPACING TABLES
C65	COPPER TYPE L - ALLOWABLE TRANSVERSE BRACE SPACING TABLES
C65.1	COPPER TYPE K - ALLOWABLE TRANSVERSE BRACE SPACING TABLES
C66	CAST IRON - ALLOWABLE TRANSVERSE & LONGITUDINAL BRACE SPACING TABLES

REVIEWED FOR CODE COMPLIANCE
BY: William Staehlin
DATE: 01-26-2024
CALIFORNIA BUILDING CODE, 2022

REGISTERED PROFESSIONAL ENGINEER
MARCIN WASAZNIK
S 6612
STRUCTURAL
STATE OF CALIFORNIA

ISAT
A Division of Tomarco Contractor Specialties

International Seismic Application Technology
14848 Northam Street, La Mirada, CA 90638
877-999-4728 (Toll Free) 714-523-0845 (fax)
www.isatsb.com

RIGID BRACING REQUIREMENTS [7]

SINGLE HUNG PIPE, TYPE K AND TYPE L COPPER TUBING (WATER FILLED + INSULATED) [9] — MAXIMUM SEISMIC DESIGN FORCE = 0.25 G's

Requires Use of ISAT Seismic Brackets. Use of Any Non-ISAT Bracket Voids Engineering. 2013 California Building Code Compliant

Maximum Pipe Diameter (in.)	Max. Vertical Support Spacing (ft.)	Rod [1] Total Vertical Load (lbs)	Min. [8] Vertical Support Rod Dia. (in.)	TRANSVERSE BRACING REQUIREMENTS: Max. [2] Brace Spacing (ft.)	Brace [3] Reaction P (lbs)	Min. Brace Assembly E - Pages	Min. Brace Anchorage [6]: Form Pour [4] Deck Page D1	Metal [5] Deck Page D2	LONGITUDINAL BRACING REQUIREMENTS: Max. [2] Brace Spacing (ft.)	Brace [3] Reaction P (lbs)	Min. Brace Assembly E - Pages	Min. Brace Anchorage [6]: Form Pour [4] Deck Page D1	Metal [5] Deck Page D2
				1-Way Transverse Brace Pattern (B1.4, B1.5)					**2-Way Trans., Longit. Brace Pattern (B3.0,B3.1,B3.3)**				
1.5	8	62	3/8	25	20	R38AAEM306	N1	L1	76	60	R38AAEM306	N1	L1
2	10	110	3/8	28	34	R38AAEM306	N1	L1	83	101	R38AAEM306	N2	L2
2.5	10	167	1/2	32	55	R12AAEM306	N1	L1	97	165	R12AAEM306	N2	L2
3	10	242	1/2	37	85	R12AAEM306	N1	L1	110	254	R12AAEM306	N3	L3
4	10	466	5/8	40	169	R58AAEM306	N2	L2	119	506	R58AAEM406	N6	L6
6	10	662	5/8	50	423	R58AAEM406	N5	L5	38	325	R58AAEM409	N4	L4
				2-Way Transverse Brace Pattern (B2.12,B2.13)					**4-Way Transverse, Longit. Brace Pattern (B4.0,B4.1,B4.3)**				
1.5	8	30	3/8	25	10	R38AAEM306	N1	L1	76	30	R38AAEM306	N1	L1
2	10	57	3/8	28	17	R38AAEM306	N1	L1	83	51	R38AAEM306	N1	L1
2.5	10	79	1/2	32	28	R12AAEM306	N1	L1	97	83	R12AAEM306	N1	L1
3	10	108	1/2	37	42	R12AAEM306	N1	L1	110	127	R12AAEM306	N2	L2
4	10	199	5/8	40	84	R58AAEM306	N1	L1	119	253	R58AAEM306	N3	L3
6	10	395	5/8	50	211	R58AAEM306	N3	L3	38	163	R58AAEM306	N2	L2
				TRANSVERSE, LONGITUDINAL BRACING REQUIREMENTS									
				4-Way Splayed Brace Pattern (B4.13,B4.14)									
1.5	8	30	3/8	25	14	R38AAEM306	N1	L1					
2	10	57	3/8	28	24	R38AAEM306	N1	L1					
2.5	10	79	1/2	32	39	R12AAEM306	N1	L1					
3	10	108	1/2	37	60	R12AAEM306	N1	L1					
4	10	199	5/8	40	119	R58AAEM306	N2	L2					
6	10	395	5/8	50	299	R58AAEM306	N3	L3					

SINGLE HUNG PIPE, TYPE K AND TYPE L COPPER TUBING (GAS PIPING) [10] — MAXIMUM SEISMIC DESIGN FORCE = 0.25 G's

				1-Way Transverse Brace Pattern (B1.4, B1.5)					**2-Way Trans., Longit. Brace Pattern (B3.0,B3.1,B3.3)**				
1.5	8	36	3/8	35	14	R38AAEM306	N1	L1	104	41	R38AAEM306	N1	L1
2	10	65	3/8	40	24	R38AAEM306	N1	L1	119	71	R38AAEM306	N1	L1
2.5	10	98	1/2	44	37	R12AAEM306	N1	L1	132	112	R12AAEM306	N2	L2
3	10	142	1/2	48	56	R12AAEM306	N1	L1	145	167	R12AAEM306	N2	L2
4	10	253	5/8	55	104	R58AAEM306	N2	L2	166	312	R58AAEM409	N4	L4
6	10	399	5/8	68	271	R58AAEM306	N3	L3	81	325	R58AAEM409	N4	L4
				2-Way Transverse Brace Pattern (B2.12,B2.13)					**4-Way Transverse, Longit. Brace Pattern (B4.0,B4.1,B4.3)**				
1.5	8	15	3/8	35	7	R38AAEM306	N1	L1	104	20	R38AAEM306	N1	L1
2	10	28	3/8	40	12	R38AAEM306	N1	L1	119	35	R38AAEM306	N1	L1
2.5	10	39	1/2	44	19	R12AAEM306	N1	L1	132	56	R12AAEM306	N1	L1
3	10	54	1/2	48	28	R12AAEM306	N1	L1	145	84	R12AAEM306	N1	L1
4	10	88	5/8	55	52	R58AAEM306	N1	L1	166	156	R58AAEM306	N2	L2
6	10	187	5/8	68	135	R58AAEM306	N2	L2	81	163	R58AAEM306	N2	L2
				TRANSVERSE, LONGITUDINAL BRACING REQUIREMENTS									
				4-Way Splayed Brace Pattern (B4.13,B4.14)									
1.5	8	15	3/8	35	10	R38AAEM306	N1	L1					
2	10	28	3/8	40	17	R38AAEM306	N1	L1					
2.5	10	39	1/2	44	26	R12AAEM306	N1	L1					
3	10	54	1/2	48	39	R12AAEM306	N1	L1					
4	10	88	5/8	55	74	R58AAEM306	N1	L1					
6	10	187	5/8	68	192	R58AAEM306	N2	L2					

1. TVL = DL + Fv + ($0.2S_{DS}$/1.4 x Wp). All Terms Are Working Loads.
2. Reductions In Actual Installed Brace Spacing Will Result In An Equal Percentage Reduction In Brace Reaction. As An Option When This Occurs ISAT May Substitute An Alternate Anchorage From Tables D1 or D2 Which Meets or Exceeds The Lowered Brace Reaction.
3. At Max. 30 Degree Brace Inclination.
4. Min. 3,000 psi NWC. Any "N Series" Connection May Be Utilized Having A Numeric Designation Equal To Or Higher Than That Shown.
5. Min. 3,000 psi NWC or LWC. Any "L Series" Connection May Be Utilized Having A Numeric Designation Equal To Or Higher Than That Shown.
6. As An Alternate, Brace Anchorage Connections To Structure May Be Employed Using Any Detail From Structural Connections Section "D" Series Details Where Assembly Design Value Meets Or Exceeds Brace Reaction.
7. For Trade Specific Bracing Installation Notes, Refer To Page 10.1
8. Utilize Any "G" Series Vertical Support Connection Having A Design Value Equal To Or Greater Than The Corresponding "Rod Total Vertical Load".
9. Based on Water Filled + Insulated Pipe Weight. Refer to X-Series Weight Charts.
10. Based on Empty Pipe Weight. Refer to X-Series Weight Charts.

REGISTERED PROFESSIONAL ENGINEER MARC IN WASSONG S-6612 STRUCTURAL STATE OF CALIFORNIA

ISAT
A Division of Tomarco Contractor Specialties
International Seismic Application Technology
14848 Northam Street, La Mirada, CA 90638
877-999-4728 (Toll Free) 714-523-0845 (Fax)
www.isatsb.com

Rev. 2
03/12/19
Page
C9-0.25-30

RIGID BRACING REQUIREMENTS [7]

SINGLE HUNG PIPE, TYPE K AND TYPE L COPPER TUBING (WATER FILLED + INSULATED) [9] — MAXIMUM SEISMIC DESIGN FORCE = 0.25 G's

Requires Use of ISAT Seismic Brackets. Use of Any Non-ISAT Bracket Voids Engineering. 2013 California Building Code Compliant

Maximum Pipe Diameter (in.)	Max. Vertical Support Spacing (ft.)	Rod [1] Total Vertical Load (lbs)	Min. [8] Vertical Support Rod Dia. (in.)	TRANSVERSE BRACING REQUIREMENTS: Max. [2] Brace Spacing (ft.)	Brace [3] Reaction P (lbs)	Min. Brace Assembly E - Pages	Min. Brace Anchorage [6]: Form Pour [4] Deck Page D1	Metal [5] Deck Page D2	LONGITUDINAL BRACING REQUIREMENTS: Max. [2] Brace Spacing (ft.)	Brace [3] Reaction P (lbs)	Min. Brace Assembly E - Pages	Min. Brace Anchorage [6]: Form Pour [4] Deck Page D1	Metal [5] Deck Page D2
				1-Way Transverse Brace Pattern (B1.4, B1.5)					**2-Way Trans., Longit. Brace Pattern (B3.0,B3.1,B3.3)**				
1.5	8	95	3/8	25	27	R38AAEM306	N1	L1	76	81	R38AAEM306	N1	L1
2	10	167	3/8	28	45	R38AAEM306	N1	L1	83	136	R38AAEM306	N2	L2
2.5	10	259	1/2	32	74	R12AAEM306	N1	L1	97	223	R12AAEM306	N3	L3
3	10	385	1/2	37	114	R12AAEM306	N2	L2	110	343	R12AAEM406	N4	L4
4	10	750	5/8	40	227	R58AAEM306	N3	L3	119	682	R58AAEM509	N7	L7
6	10	944	5/8	50	570	R58AAEM406	N6	L6	38	435	R58AAEM406	N5	L5
				2-Way Transverse Brace Pattern (B2.12,B2.13)					**4-Way Transverse, Longit. Brace Pattern (B4.0,B4.1,B4.3)**				
1.5	8	30	3/8	25	14	R38AAEM306	N1	L1	76	41	R38AAEM306	N1	L1
2	10	57	3/8	28	23	R38AAEM306	N1	L1	83	68	R38AAEM306	N1	L1
2.5	10	79	1/2	32	37	R12AAEM306	N1	L1	97	111	R12AAEM306	N2	L2
3	10	108	1/2	37	57	R12AAEM306	N1	L1	110	171	R12AAEM306	N2	L2
4	10	199	5/8	40	114	R58AAEM306	N2	L2	119	341	R58AAEM406	N4	L4
6	10	395	5/8	50	285	R58AAEM306	N3	L3	38	218	R58AAEM306	N3	L3
				TRANSVERSE, LONGITUDINAL BRACING REQUIREMENTS									
				4-Way Splayed Brace Pattern (B4.13,B4.14)									
1.5	8	30	3/8	25	19	R38AAEM306	N1	L1					
2	10	57	3/8	28	32	R38AAEM306	N1	L1					
2.5	10	79	1/2	32	53	R12AAEM306	N1	L1					
3	10	108	1/2	37	81	R12AAEM306	N1	L1					
4	10	199	5/8	40	161	R58AAEM306	N2	L2					
6	10	395	5/8	50	403	R58AAEM406	N5	L5					

SINGLE HUNG PIPE, TYPE K AND TYPE L COPPER TUBING (GAS PIPING) [10] — MAXIMUM SEISMIC DESIGN FORCE = 0.25 G's

				1-Way Transverse Brace Pattern (B1.4, B1.5)					**2-Way Trans., Longit. Brace Pattern (B3.0,B3.1,B3.3)**				
1.5	8	59	3/8	35	18	R38AAEM306	N1	L1	104	55	R38AAEM306	N1	L1
2	10	105	3/8	40	32	R38AAEM306	N1	L1	119	95	R38AAEM306	N1	L1
2.5	10	161	1/2	44	50	R12AAEM306	N1	L1	132	150	R12AAEM306	N2	L2
3	10	236	1/2	48	75	R12AAEM306	N1	L1	145	225	R12AAEM306	N3	L3
4	10	428	5/8	55	140	R58AAEM306	N2	L2	166	421	R58AAEM406	N5	L5
6	10	622	5/8	68	365	R58AAEM406	N4	L4	81	435	R58AAEM406	N5	L5
				2-Way Transverse Brace Pattern (B2.12,B2.13)					**4-Way Transverse, Longit. Brace Pattern (B4.0,B4.1,B4.3)**				
1.5	8	15	3/8	35	9	R38AAEM306	N1	L1	104	27	R38AAEM306	N1	L1
2	10	28	3/8	40	16	R38AAEM306	N1	L1	119	48	R38AAEM306	N1	L1
2.5	10	39	1/2	44	25	R12AAEM306	N1	L1	132	75	R12AAEM306	N1	L1
3	10	54	1/2	48	38	R12AAEM306	N1	L1	145	113	R12AAEM306	N2	L2
4	10	88	5/8	55	70	R58AAEM306	N1	L1	166	210	R58AAEM306	N3	L3
6	10	187	5/8	68	183	R58AAEM306	N2	L2	81	218	R58AAEM306	N3	L3
				TRANSVERSE, LONGITUDINAL BRACING REQUIREMENTS									
				4-Way Splayed Brace Pattern (B4.13,B4.14)									
1.5	8	15	3/8	35	13	R38AAEM306	N1	L1					
2	10	28	3/8	40	22	R38AAEM306	N1	L1					
2.5	10	39	1/2	44	35	R12AAEM306	N1	L1					
3	10	54	1/2	48	53	R12AAEM306	N1	L1					
4	10	88	5/8	55	99	R58AAEM306	N1	L1					
6	10	187	5/8	68	258	R58AAEM306	N3	L3					

1. TVL = DL + Fv + ($0.2S_{DS}$/1.4 x Wp). All Terms Are Working Loads.
2. Reductions In Actual Installed Brace Spacing Will Result In An Equal Percentage Reduction In Brace Reaction. As An Option When This Occurs ISAT May Substitute An Alternate Anchorage From Tables D1 or D2 Which Meets or Exceeds The Lowered Brace Reaction.
3. At Max. 50 Degree Brace Inclination.
4. Min. 3,000 psi NWC. Any "N Series" Connection May Be Utilized Having A Numeric Designation Equal To Or Higher Than That Shown.
5. Min. 3,000 psi NWC or LWC. Any "L Series" Connection May Be Utilized Having A Numeric Designation Equal To Or Higher Than That Shown.
6. As An Alternate, Brace Anchorage Connections To Structure May Be Employed Using Any Detail From Structural Connections Section "D" Series Details Where Assembly Design Value Meets Or Exceeds Brace Reaction.
7. For Trade Specific Bracing Installation Notes, Refer To Page 10.1
8. Utilize Any "G" Series Vertical Support Connection Having A Design Value Equal To Or Greater Than The Corresponding "Rod Total Vertical Load".
9. Based on Water Filled + Insulated Pipe Weight. Refer to X-Series Weight Charts.
10. Based on Empty Pipe Weight. Refer to X-Series Weight Charts.

REGISTERED PROFESSIONAL ENGINEER — MARC IN WASAZNIK — S 6612 — STRUCTURAL — STATE OF CALIFORNIA

ISAT — A Division of Tomarco Contractor Specialties

International Seismic Application Technology
14848 Northam Street, La Mirada, CA 90638
877-999-4728 (Toll Free) 714-523-0845 (Fax)
www.isatsb.com

Rev. 2
03/12/19

REVIEWED FOR CODE COMPLIANCE — OPM-0403 — By William Staehlin — Date 01/26/2024 — CALIFORNIA BUILDING CODE

RIGID BRACING REQUIREMENTS [7]

SINGLE HUNG PIPE, TYPE K AND TYPE L COPPER TUBING (WATER FILLED + INSULATED) [9] — MAXIMUM SEISMIC DESIGN FORCE = 0.25 G's

Requires Use of ISAT Seismic Brackets. Use of Any Non-ISAT Bracket Voids Engineering. 2013 California Building Code Compliant

Maximum Pipe Diameter (in.)	Max. Vertical Support Spacing (ft.)	Rod [1] Total Vertical Load (lbs)	Min. [8] Vertical Support Rod Dia. (in.)	TRANSVERSE BRACING REQUIREMENTS: Max. [2] Brace Spacing (ft.)	Brace [3] Reaction P (lbs)	Min. Brace Assembly E - Pages	Min. Brace Anchorage [6]: Form Pour [4] Deck Page D1	Metal [5] Deck Page D2	LONGITUDINAL BRACING REQUIREMENTS: Max. [2] Brace Spacing (ft.)	Brace [3] Reaction P (lbs)	Min. Brace Assembly E - Pages	Min. Brace Anchorage [6]: Form Pour [4] Deck Page D1	Metal [5] Deck Page D2
				1-Way Transverse Brace Pattern (B1.4, B1.5)					**2-Way Trans., Longit. Brace Pattern (B3.0,B3.1,B3.3)**				
1.5	8	125	3/8	25	35	R38AAEM306	N1	L1	76	104	R38AAEM306	N2	L2
2	10	217	3/8	28	58	R38AAEM306	N1	L1	83	175	R38AAEM306	N2	L2
2.5	10	341	1/2	32	96	R12AAEM306	N1	L1	97	287	R12AAEM306	N3	L3
3	10	510	1/2	37	147	R12AAEM306	N2	L2	110	440	R12AAEM406	N5	L5
4	10	1,000	5/8	40	292	R58AAEM306	N3	L3	119	877	R58AAEM506	N9	L9
6	10	1,113	5/8	45	665	R58AAEM509	N7	L7	34	495	R58AAEM406	N5	L5
				2-Way Transverse Brace Pattern (B2.12,B2.13)					**4-Way Transverse, Longit. Brace Pattern (B4.0,B4.1,B4.3)**				
1.5	8	30	3/8	25	17	R38AAEM306	N1	L1	76	52	R38AAEM306	N1	L1
2	10	57	3/8	28	29	R38AAEM306	N1	L1	83	88	R38AAEM306	N1	L1
2.5	10	79	1/2	32	48	R12AAEM306	N1	L1	97	143	R12AAEM306	N2	L2
3	10	108	1/2	37	73	R12AAEM306	N1	L1	110	220	R12AAEM306	N3	L3
4	10	199	5/8	40	146	R58AAEM306	N2	L2	119	438	R58AAEM406	N5	L5
6	10	395	5/8	45	333	R58AAEM406	N4	L4	34	248	R58AAEM306	N3	L3
				TRANSVERSE, LONGITUDINAL BRACING REQUIREMENTS									
				4-Way Splayed Brace Pattern (B4.13,B4.14)									
1.5	8	30	3/8	25	25	R38AAEM306	N1	L1					
2	10	57	3/8	28	41	R38AAEM306	N1	L1					
2.5	10	79	1/2	32	68	R12AAEM306	N1	L1					
3	10	108	1/2	37	104	R12AAEM306	N2	L2					
4	10	199	5/8	40	207	R58AAEM306	N3	L3					
6	10	395	5/8	45	470	R58AAEM406	N5	L5					

SINGLE HUNG PIPE, TYPE K AND TYPE L COPPER TUBING (GAS PIPING) [10] — MAXIMUM SEISMIC DESIGN FORCE = 0.25 G's

				1-Way Transverse Brace Pattern (B1.4, B1.5)					**2-Way Trans., Longit. Brace Pattern (B3.0,B3.1,B3.3)**				
1.5	8	79	3/8	35	24	R38AAEM306	N1	L1	104	71	R38AAEM306	N1	L1
2	10	140	3/8	40	41	R38AAEM306	N1	L1	119	123	R38AAEM306	N2	L2
2.5	10	216	1/2	44	64	R12AAEM306	N1	L1	132	193	R12AAEM306	N2	L2
3	10	319	1/2	48	97	R12AAEM306	N1	L1	145	290	R12AAEM306	N3	L3
4	10	582	5/8	55	180	R58AAEM306	N2	L2	166	541	R58AAEM406	N6	L6
6	10	778	5/8	68	469	R58AAEM406	N5	L5	71	495	R58AAEM406	N5	L5
				2-Way Transverse Brace Pattern (B2.12,B2.13)					**4-Way Transverse, Longit. Brace Pattern (B4.0,B4.1,B4.3)**				
1.5	8	15	3/8	35	12	R38AAEM306	N1	L1	104	35	R38AAEM306	N1	L1
2	10	28	3/8	40	20	R38AAEM306	N1	L1	119	61	R38AAEM306	N1	L1
2.5	10	39	1/2	44	32	R12AAEM306	N1	L1	132	97	R12AAEM306	N1	L1
3	10	54	1/2	48	48	R12AAEM306	N1	L1	145	145	R12AAEM306	N2	L2
4	10	88	5/8	55	90	R58AAEM306	N1	L1	166	271	R58AAEM306	N3	L3
6	10	187	5/8	68	235	R58AAEM306	N3	L3	71	248	R58AAEM306	N3	L3
				TRANSVERSE, LONGITUDINAL BRACING REQUIREMENTS									
				4-Way Splayed Brace Pattern (B4.13,B4.14)									
1.5	8	15	3/8	35	17	R38AAEM306	N1	L1					
2	10	28	3/8	40	29	R38AAEM306	N1	L1					
2.5	10	39	1/2	44	46	R12AAEM306	N1	L1					
3	10	54	1/2	48	68	R12AAEM306	N1	L1					
4	10	88	5/8	55	128	R58AAEM306	N2	L2					
6	10	187	5/8	68	332	R58AAEM406	N4	L4					

1. TVL = DL + Fv + ($0.2S_{DS}$/1.4 x Wp). All Terms Are Working Loads.
2. Reductions In Actual Installed Brace Spacing Will Result In An Equal Percentage Reduction In Brace Reaction. As An Option When This Occurs ISAT May Substitute An Alternate Anchorage From Tables D1 or D2 Which Meets or Exceeds The Lowered Brace Reaction.
3. At Max. 60 Degree Brace Inclination.
4. Min. 3,000 psi NWC. Any "N Series" Connection May Be Utilized Having A Numeric Designation Equal To Or Higher Than That Shown.
5. Min. 3,000 psi NWC or LWC. Any "L Series" Connection May Be Utilized Having A Numeric Designation Equal To Or Higher Than That Shown.
6. As An Alternate, Brace Anchorage Connections To Structure May Be Employed Using Any Detail From Structural Connections Section "D" Series Details Where Assembly Design Value Meets Or Exceeds Brace Reaction.
7. For Trade Specific Bracing Installation Notes, Refer To Page 10.1
8. Utilize Any "G" Series Vertical Support Connection Having A Design Value Equal To Or Greater Than The Corresponding "Rod Total Vertical Load".
9. Based on Water Filled + Insulated Pipe Weight. Refer to X-Series Weight Charts.
10. Based on Empty Pipe Weight. Refer to X-Series Weight Charts.

REGISTERED PROFESSIONAL ENGINEER MARCIN WASAZNIK S 6612 STRUCTURAL STATE OF CALIFORNIA

ISAT
A Division of Tomarco Contractor Specialties
International Seismic Application Technology
14848 Northam Street, La Mirada, CA 90638
877-999-4728 (Toll Free) 714-523-0845 (Fax)
www.isatsb.com

Rev. 2
03/12/19
Page
C9-0.25-60

RIGID BRACING REQUIREMENTS [7]

SINGLE HUNG PIPE, TYPE K AND TYPE L COPPER TUBING (WATER FILLED + INSULATED) [9] — MAXIMUM SEISMIC DESIGN FORCE = 0.50 G's

Requires Use of ISAT Seismic Brackets. Use of Any Non-ISAT Bracket Voids Engineering. 2013 California Building Code Compliant

Maximum Pipe Diameter (in.)	Max. Vertical Support Spacing (ft.)	Rod [1] Total Vertical Load (lbs)	Min. [8] Vertical Support Rod Dia. (in.)	TRANSVERSE BRACING REQUIREMENTS: Max. [2] Brace Spacing (ft.)	Brace [3] Reaction P (lbs)	Min. Brace Assembly E - Pages	Min. Brace Anchorage [6]: Form Pour [4] Deck Page D1	Metal [5] Deck Page D2	LONGITUDINAL BRACING REQUIREMENTS: Max. [2] Brace Spacing (ft.)	Brace [3] Reaction P (lbs)	Min. Brace Assembly E - Pages	Min. Brace Anchorage [6]: Form Pour [4] Deck Page D1	Metal [5] Deck Page D2
				1-Way Transverse Brace Pattern (B1.4, B1.5)					**2-Way Trans., Longit. Brace Pattern (B3.0,B3.1,B3.3)**				
1.5	8	75	3/8	18	28	R38AAEM306	N1	L1	53	85	R38AAEM306	N1	L1
2	10	132	3/8	20	48	R38AAEM306	N1	L1	59	143	R38AAEM306	N2	L2
2.5	10	203	1/2	23	78	R12AAEM306	N1	L1	69	234	R12AAEM306	N3	L3
3	10	298	1/2	26	120	R12AAEM306	N2	L2	78	360	R12AAEM406	N4	L4
4	10	513	5/8	28	239	R58AAEM306	N3	L3	68	580	R58AAEM406	N6	L6
6	10	667	5/8	26	435	R58AAEM406	N5	L5	19	325	R58AAEM409	N4	L4
				2-Way Transverse Brace Pattern (B2.12,B2.13)					**4-Way Transverse, Longit. Brace Pattern (B4.0,B4.1,B4.3)**				
1.5	8	30	3/8	18	14	R38AAEM306	N1	L1	53	43	R38AAEM306	N1	L1
2	10	57	3/8	20	24	R38AAEM306	N1	L1	59	72	R38AAEM306	N1	L1
2.5	10	79	1/2	23	39	R12AAEM306	N1	L1	69	117	R12AAEM306	N2	L2
3	10	108	1/2	26	60	R12AAEM306	N1	L1	78	180	R12AAEM306	N2	L2
4	10	199	5/8	28	119	R58AAEM306	N2	L2	68	290	R58AAEM306	N3	L3
6	10	395	5/8	26	218	R58AAEM306	N3	L3	19	163	R58AAEM306	N2	L2
				TRANSVERSE, LONGITUDINAL BRACING REQUIREMENTS									
				4-Way Splayed Brace Pattern (B4.13,B4.14)									
1.5	8	30	3/8	18	20	R38AAEM306	N1	L1					
2	10	57	3/8	20	34	R38AAEM306	N1	L1					
2.5	10	79	1/2	23	55	R12AAEM306	N1	L1					
3	10	108	1/2	26	85	R12AAEM306	N1	L1					
4	10	199	5/8	28	169	R58AAEM306	N2	L2					
6	10	395	5/8	26	308	R58AAEM409	N4	L4					

SINGLE HUNG PIPE, TYPE K AND TYPE L COPPER TUBING (GAS PIPING) [10] — MAXIMUM SEISMIC DESIGN FORCE = 0.50 G's

				1-Way Transverse Brace Pattern (B1.4, B1.5)					**2-Way Trans., Longit. Brace Pattern (B3.0,B3.1,B3.3)**				
1.5	8	50	3/8	28	22	R38AAEM306	N1	L1	85	67	R38AAEM306	N1	L1
2	10	90	3/8	33	39	R38AAEM306	N1	L1	100	118	R38AAEM306	N2	L2
2.5	10	138	1/2	37	63	R12AAEM306	N1	L1	111	188	R12AAEM306	N2	L2
3	10	202	1/2	41	94	R12AAEM306	N1	L1	122	281	R12AAEM306	N3	L3
4	10	365	5/8	47	175	R58AAEM306	N2	L2	140	525	R58AAEM406	N6	L6
6	10	459	5/8	54	435	R58AAEM406	N5	L5	41	325	R58AAEM409	N4	L4
				2-Way Transverse Brace Pattern (B2.12,B2.13)					**4-Way Transverse, Longit. Brace Pattern (B4.0,B4.1,B4.3)**				
1.5	8	15	3/8	28	11	R38AAEM306	N1	L1	85	33	R38AAEM306	N1	L1
2	10	28	3/8	33	20	R38AAEM306	N1	L1	100	59	R38AAEM306	N1	L1
2.5	10	39	1/2	37	31	R12AAEM306	N1	L1	111	94	R12AAEM306	N1	L1
3	10	54	1/2	41	47	R12AAEM306	N1	L1	122	141	R12AAEM306	N2	L2
4	10	88	5/8	47	88	R58AAEM306	N1	L1	140	263	R58AAEM306	N3	L3
6	10	187	5/8	54	218	R58AAEM306	N3	L3	41	163	R58AAEM306	N2	L2
				TRANSVERSE, LONGITUDINAL BRACING REQUIREMENTS									
				4-Way Splayed Brace Pattern (B4.13,B4.14)									
1.5	8	15	3/8	28	16	R38AAEM306	N1	L1					
2	10	28	3/8	33	28	R38AAEM306	N1	L1					
2.5	10	39	1/2	37	44	R12AAEM306	N1	L1					
3	10	54	1/2	41	66	R12AAEM306	N1	L1					
4	10	88	5/8	31	81	R58AAEM306	N1	L1					
6	10	187	5/8	26	146	R58AAEM306	N2	L2					

1. TVL = DL + Fv + ($0.2S_{DS}$/1.4 x Wp). All Terms Are Working Loads.
2. Reductions In Actual Installed Brace Spacing Will Result In An Equal Percentage Reduction In Brace Reaction. As An Option When This Occurs ISAT May Substitute An Alternate Anchorage From Tables D1 or D2 Which Meets or Exceeds The Lowered Brace Reaction.
3. At Max. 30 Degree Brace Inclination.
4. Min. 3,000 psi NWC. Any "N Series" Connection May Be Utilized Having A Numeric Designation Equal To Or Higher Than That Shown.
5. Min. 3,000 psi NWC or LWC. Any "L Series" Connection May Be Utilized Having A Numeric Designation Equal To Or Higher Than That Shown.
6. As An Alternate, Brace Anchorage Connections To Structure May Be Employed Using Any Detail From Structural Connections Section "D" Series Details Where Assembly Design Value Meets Or Exceeds Brace Reaction.
7. For Trade Specific Bracing Installation Notes, Refer To Page 10.1
8. Utilize Any "G" Series Vertical Support Connection Having A Design Value Equal To Or Greater Than The Corresponding "Rod Total Vertical Load".
9. Based on Water Filled + Insulated Pipe Weight. Refer to X-Series Weight Charts.
10. Based on Empty Pipe Weight. Refer to X-Series Weight Charts.

REGISTERED PROFESSIONAL ENGINEER MARCIN WASAZNIK S 6612 STRUCTURAL STATE OF CALIFORNIA

ISAT
A Division of Tomarco Contractor Specialties
International Seismic Application Technology
14848 Northam Street, La Mirada, CA 90638
877-999-4728 (Toll Free) 714-523-0845 (Fax)
www.isatsb.com

Rev. 2
03/12/19
Page
C9-0.5-30

RIGID BRACING REQUIREMENTS [7]

SINGLE HUNG PIPE, TYPE K AND TYPE L COPPER TUBING (WATER FILLED + INSULATED) [9] — MAXIMUM SEISMIC DESIGN FORCE = 0.50 G's

Requires Use of ISAT Seismic Brackets. Use of Any Non-ISAT Bracket Voids Engineering. 2013 California Building Code Compliant

Maximum Pipe Diameter (in.)	Max. Vertical Support Spacing (ft.)	Rod [1] Total Vertical Load (lbs)	Min. [8] Vertical Support Rod Dia. (in.)	TRANSVERSE BRACING REQUIREMENTS: Max. [2] Brace Spacing (ft.)	Brace [3] Reaction P (lbs)	Min. Brace Assembly E - Pages	Min. Brace Anchorage [6]: Form Pour [4] Deck Page D1	Metal [5] Deck Page D2	LONGITUDINAL BRACING REQUIREMENTS: Max. [2] Brace Spacing (ft.)	Brace [3] Reaction P (lbs)	Min. Brace Assembly E - Pages	Min. Brace Anchorage [6]: Form Pour [4] Deck Page D1	Metal [5] Deck Page D2
				1-Way Transverse Brace Pattern (B1.4, B1.5)					**2-Way Trans., Longit. Brace Pattern (B3.0,B3.1,B3.3)**				
1.5	8	122	3/8	18	38	R38AAEM306	N1	L1	53	115	R38AAEM306	N2	L2
2	10	213	3/8	20	64	R38AAEM306	N1	L1	59	193	R38AAEM306	N2	L2
2.5	10	334	1/2	23	105	R12AAEM306	N2	L2	69	315	R12AAEM409	N4	L4
3	10	500	1/2	26	161	R12AAEM306	N2	L2	78	484	R12AAEM406	N5	L5
4	10	845	5/8	28	322	R58AAEM409	N4	L4	68	780	R58AAEM509	N8	L8
6	10	954	5/8	26	585	R58AAEM406	N6	L6	19	435	R58AAEM406	N5	L5
				2-Way Transverse Brace Pattern (B2.12,B2.13)					**4-Way Transverse, Longit. Brace Pattern (B4.0,B4.1,B4.3)**				
1.5	8	30	3/8	18	19	R38AAEM306	N1	L1	53	57	R38AAEM306	N1	L1
2	10	57	3/8	20	32	R38AAEM306	N1	L1	59	96	R38AAEM306	N1	L1
2.5	10	79	1/2	23	53	R12AAEM306	N1	L1	69	158	R12AAEM306	N2	L2
3	10	108	1/2	26	81	R12AAEM306	N1	L1	78	242	R12AAEM306	N3	L3
4	10	199	5/8	28	161	R58AAEM306	N2	L2	68	390	R58AAEM406	N4	L4
6	10	395	5/8	26	293	R58AAEM306	N3	L3	19	218	R58AAEM306	N3	L3
				TRANSVERSE, LONGITUDINAL BRACING REQUIREMENTS									
				4-Way Splayed Brace Pattern (B4.13,B4.14)									
1.5	8	30	3/8	18	27	R38AAEM306	N1	L1					
2	10	57	3/8	20	45	R38AAEM306	N1	L1					
2.5	10	79	1/2	23	74	R12AAEM306	N1	L1					
3	10	108	1/2	26	114	R12AAEM306	N2	L2					
4	10	199	5/8	28	227	R58AAEM306	N3	L3					
6	10	395	5/8	26	414	R58AAEM406	N5	L5					

SINGLE HUNG PIPE, TYPE K AND TYPE L COPPER TUBING (GAS PIPING) [10] — MAXIMUM SEISMIC DESIGN FORCE = 0.50 G's

				1-Way Transverse Brace Pattern (B1.4, B1.5)					**2-Way Trans., Longit. Brace Pattern (B3.0,B3.1,B3.3)**				
1.5	8	87	3/8	28	30	R38AAEM306	N1	L1	85	90	R38AAEM306	N1	L1
2	10	157	3/8	33	53	R38AAEM306	N1	L1	100	160	R38AAEM306	N2	L2
2.5	10	244	1/2	37	84	R12AAEM306	N1	L1	111	253	R12AAEM306	N3	L3
3	10	360	1/2	41	126	R12AAEM306	N2	L2	122	379	R12AAEM406	N4	L4
4	10	660	5/8	47	236	R58AAEM306	N3	L3	140	708	R58AAEM509	N8	L8
6	10	746	5/8	54	585	R58AAEM406	N6	L6	40	435	R58AAEM406	N5	L5
				2-Way Transverse Brace Pattern (B2.12,B2.13)					**4-Way Transverse, Longit. Brace Pattern (B4.0,B4.1,B4.3)**				
1.5	8	15	3/8	28	15	R38AAEM306	N1	L1	85	45	R38AAEM306	N1	L1
2	10	28	3/8	33	27	R38AAEM306	N1	L1	100	80	R38AAEM306	N1	L1
2.5	10	39	1/2	37	42	R12AAEM306	N1	L1	111	126	R12AAEM306	N2	L2
3	10	54	1/2	41	63	R12AAEM306	N1	L1	122	190	R12AAEM306	N2	L2
4	10	88	5/8	47	118	R58AAEM306	N2	L2	140	354	R58AAEM406	N4	L4
6	10	187	5/8	54	293	R58AAEM306	N3	L3	40	218	R58AAEM306	N3	L3
				TRANSVERSE, LONGITUDINAL BRACING REQUIREMENTS									
				4-Way Splayed Brace Pattern (B4.13,B4.14)									
1.5	8	15	3/8	28	21	R38AAEM306	N1	L1					
2	10	28	3/8	33	38	R38AAEM306	N1	L1					
2.5	10	39	1/2	37	60	R12AAEM306	N1	L1					
3	10	54	1/2	41	89	R12AAEM306	N1	L1					
4	10	88	5/8	47	167	R58AAEM306	N2	L2					
6	10	187	5/8	54	414	R58AAEM406	N5	L5					

1. TVL = DL + Fv + ($0.2S_{DS}$/1.4 x Wp). All Terms Are Working Loads.
2. Reductions In Actual Installed Brace Spacing Will Result In An Equal Percentage Reduction In Brace Reaction. As An Option When This Occurs ISAT May Substitute An Alternate Anchorage From Tables D1 or D2 Which Meets or Exceeds The Lowered Brace Reaction.
3. At Max. 50 Degree Brace Inclination.
4. Min. 3,000 psi NWC. Any "N Series" Connection May Be Utilized Having A Numeric Designation Equal To Or Higher Than That Shown.
5. Min. 3,000 psi NWC or LWC. Any "L Series" Connection May Be Utilized Having A Numeric Designation Equal To Or Higher Than That Shown.
6. As An Alternate, Brace Anchorage Connections To Structure May Be Employed Using Any Detail From Structural Connections Section "D" Series Details Where Assembly Design Value Meets Or Exceeds Brace Reaction.
7. For Trade Specific Bracing Installation Notes, Refer To Page 10.1
8. Utilize Any "G" Series Vertical Support Connection Having A Design Value Equal To Or Greater Than The Corresponding "Rod Total Vertical Load".
9. Based on Water Filled + Insulated Pipe Weight. Refer to X-Series Weight Charts.
10. Based on Empty Pipe Weight. Refer to X-Series Weight Charts.

REGISTERED PROFESSIONAL ENGINEER MARCIN WASAZNIK S 6612 STRUCTURAL STATE OF CALIFORNIA

ISAT
A Division of Tomarco Contractor Specialties
International Seismic Application Technology
14848 Northam Street, La Mirada, CA 90638
877-999-4728 (Toll Free) 714-523-0845 (Fax)
www.isatsb.com

Rev. 2
03/12/19

OPM-0403 REVIEWED FOR CODE COMPLIANCE BY William Staehlin 01/26/2024 CALIFORNIA BUILDING CODE 2019

RIGID BRACING REQUIREMENTS [7]

SINGLE HUNG PIPE, TYPE K AND TYPE L COPPER TUBING (WATER FILLED + INSULATED) [9] — MAXIMUM SEISMIC DESIGN FORCE = 0.50 G's

Requires Use of ISAT Seismic Brackets. Use of Any Non-ISAT Bracket Voids Engineering. 2013 California Building Code Compliant

Maximum Pipe Diameter (in.)	Max. Vertical Support Spacing (ft.)	Rod [1] Total Vertical Load (lbs)	Min. [8] Vertical Support Rod Dia. (in.)	TRANSVERSE BRACING REQUIREMENTS: Max. [2] Brace Spacing (ft.)	Brace [3] Reaction P (lbs)	Min. Brace Assembly E - Pages	Min. Brace Anchorage [6]: Form Pour [4] Deck Page D1	Metal [5] Deck Page D2	LONGITUDINAL BRACING REQUIREMENTS: Max. [2] Brace Spacing (ft.)	Brace [3] Reaction P (lbs)	Min. Brace Assembly E - Pages	Min. Brace Anchorage [6]: Form Pour [4] Deck Page D1	Metal [5] Deck Page D2
				1-Way Transverse Brace Pattern (B1.4, B1.5)					**2-Way Trans., Longit. Brace Pattern (B3.0,B3.1,B3.3)**				
1.5	8	164	3/8	18	49	R38AAEM306	N1	L1	53	148	R38AAEM306	N2	L2
2	10	283	3/8	20	83	R38AAEM306	N1	L1	59	248	R38AAEM306	N3	L3
2.5	10	449	1/2	23	135	R12AAEM306	N2	L2	69	405	R12AAEM406	N5	L5
3	10	634	1/2	26	208	R12AAEM306	N3	L3	71	570	R12AAEM406	N6	L6
4	10	1,038	5/8	27	395	R58AAEM406	N4	L4	60	885	R58AAEM506	N9	L9
6	10	1,113	5/8	23	665	R58AAEM509	N7	L7	17	495	R58AAEM406	N5	L5
				2-Way Transverse Brace Pattern (B2.12,B2.13)					**4-Way Transverse, Longit. Brace Pattern (B4.0,B4.1,B4.3)**				
1.5	8	30	3/8	18	25	R38AAEM306	N1	L1	53	74	R38AAEM306	N1	L1
2	10	57	3/8	20	41	R38AAEM306	N1	L1	59	124	R38AAEM306	N2	L2
2.5	10	79	1/2	23	68	R12AAEM306	N1	L1	69	203	R12AAEM306	N3	L3
3	10	108	1/2	26	104	R12AAEM306	N2	L2	71	285	R12AAEM306	N3	L3
4	10	199	5/8	27	198	R58AAEM306	N2	L2	60	443	R58AAEM406	N5	L5
6	10	395	5/8	23	333	R58AAEM406	N4	L4	17	248	R58AAEM306	N3	L3
				TRANSVERSE, LONGITUDINAL BRACING REQUIREMENTS									
				4-Way Splayed Brace Pattern (B4.13,B4.14)									
1.5	8	30	3/8	18	35	R38AAEM306	N1	L1					
2	10	57	3/8	20	58	R38AAEM306	N1	L1					
2.5	10	79	1/2	23	96	R12AAEM306	N1	L1					
3	10	108	1/2	26	147	R12AAEM306	N2	L2					
4	10	199	5/8	27	279	R58AAEM306	N3	L3					
6	10	395	5/8	23	470	R58AAEM406	N5	L5					

SINGLE HUNG PIPE, TYPE K AND TYPE L COPPER TUBING (GAS PIPING) [10] — MAXIMUM SEISMIC DESIGN FORCE = 0.50 G's

				1-Way Transverse Brace Pattern (B1.4, B1.5)					**2-Way Trans., Longit. Brace Pattern (B3.0,B3.1,B3.3)**				
1.5	8	120	3/8	28	38	R38AAEM306	N1	L1	85	115	R38AAEM306	N2	L2
2	10	215	3/8	33	68	R38AAEM306	N1	L1	100	205	R38AAEM306	N3	L3
2.5	10	336	1/2	37	108	R12AAEM306	N2	L2	111	325	R12AAEM409	N4	L4
3	10	499	1/2	41	162	R12AAEM306	N2	L2	122	487	R12AAEM406	N5	L5
4	10	898	5/8	47	303	R58AAEM409	N4	L4	136	885	R58AAEM506	N9	L9
6	10	905	5/8	48	665	R58AAEM509	N7	L7	36	495	R58AAEM406	N5	L5
				2-Way Transverse Brace Pattern (B2.12,B2.13)					**4-Way Transverse, Longit. Brace Pattern (B4.0,B4.1,B4.3)**				
1.5	8	15	3/8	28	19	R38AAEM306	N1	L1	85	58	R38AAEM306	N1	L1
2	10	28	3/8	33	34	R38AAEM306	N1	L1	100	103	R38AAEM306	N2	L2
2.5	10	39	1/2	37	54	R12AAEM306	N1	L1	111	163	R12AAEM306	N2	L2
3	10	54	1/2	41	81	R12AAEM306	N1	L1	122	244	R12AAEM306	N3	L3
4	10	88	5/8	47	152	R58AAEM306	N2	L2	136	443	R58AAEM406	N5	L5
6	10	187	5/8	48	333	R58AAEM406	N4	L4	36	248	R58AAEM306	N3	L3
				TRANSVERSE, LONGITUDINAL BRACING REQUIREMENTS									
				4-Way Splayed Brace Pattern (B4.13,B4.14)									
1.5	8	15	3/8	28	27	R38AAEM306	N1	L1					
2	10	28	3/8	33	48	R38AAEM306	N1	L1					
2.5	10	39	1/2	37	77	R12AAEM306	N1	L1					
3	10	54	1/2	41	115	R12AAEM306	N2	L2					
4	10	88	5/8	47	215	R58AAEM306	N3	L3					
6	10	187	5/8	48	470	R58AAEM406	N5	L5					

1. TVL = DL + Fv + ($0.2S_{DS}$/1.4 x Wp). All Terms Are Working Loads.
2. Reductions In Actual Installed Brace Spacing Will Result In An Equal Percentage Reduction In Brace Reaction. As An Option When This Occurs ISAT May Substitute An Alternate Anchorage From Tables D1 or D2 Which Meets or Exceeds The Lowered Brace Reaction.
3. At Max. 60 Degree Brace Inclination.
4. Min. 3,000 psi NWC. Any "N Series" Connection May Be Utilized Having A Numeric Designation Equal To Or Higher Than That Shown.
5. Min. 3,000 psi NWC or LWC. Any "L Series" Connection May Be Utilized Having A Numeric Designation Equal To Or Higher Than That Shown.
6. As An Alternate, Brace Anchorage Connections To Structure May Be Employed Using Any Detail From Structural Connections Section "D" Series Details Where Assembly Design Value Meets Or Exceeds Brace Reaction.
7. For Trade Specific Bracing Installation Notes, Refer To Page 10.1
8. Utilize Any "G" Series Vertical Support Connection Having A Design Value Equal To Or Greater Than The Corresponding "Rod Total Vertical Load".
9. Based on Water Filled + Insulated Pipe Weight. Refer to X-Series Weight Charts.
10. Based on Empty Pipe Weight. Refer to X-Series Weight Charts.

REGISTERED PROFESSIONAL ENGINEER MARCIN WASAZNIK S 6612 STRUCTURAL STATE OF CALIFORNIA

ISAT
A Division of Tomarco Contractor Specialties
International Seismic Application Technology
14848 Northam Street, La Mirada, CA 90638
877-999-4728 (Toll Free) 714-523-0845 (Fax)
www.isatsb.com

Rev. 2
03/12/19
Page
C9-0.5-60

RIGID BRACING REQUIREMENTS [7]

SINGLE HUNG PIPE, TYPE K AND TYPE L COPPER TUBING (WATER FILLED + INSULATED) [9] — MAXIMUM SEISMIC DESIGN FORCE = 0.75 G's

Requires Use of ISAT Seismic Brackets. Use of Any Non-ISAT Bracket Voids Engineering. 2013 California Building Code Compliant

Maximum Pipe Diameter (in.)	Max. Vertical Support Spacing (ft.)	Rod [1] Total Vertical Load (lbs)	Min. [8] Vertical Support Rod Dia. (in.)	TRANSVERSE BRACING REQUIREMENTS: Max. [2] Brace Spacing (ft.)	Brace [3] Reaction P (lbs)	Min. Brace Assembly E - Pages	Min. Brace Anchorage [6]: Form Pour [4] Deck Page D1	Metal [5] Deck Page D2	LONGITUDINAL BRACING REQUIREMENTS: Max. [2] Brace Spacing (ft.)	Brace [3] Reaction P (lbs)	Min. Brace Assembly E - Pages	Min. Brace Anchorage [6]: Form Pour [4] Deck Page D1	Metal [5] Deck Page D2
				1-Way Transverse Brace Pattern (B1.4, B1.5)					**2-Way Trans., Longit. Brace Pattern (B3.0,B3.1,B3.3)**				
1.5	8	83	3/8	15	35	R38AAEM306	N1	L1	42	100	R38AAEM306	N2	L2
2	10	149	3/8	16	58	R38AAEM306	N1	L1	48	175	R38AAEM306	N2	L2
2.5	10	230	1/2	19	96	R12AAEM306	N1	L1	56	287	R12AAEM306	N3	L3
3	10	310	1/2	21	147	R12AAEM306	N2	L2	54	375	R12AAEM406	N4	L4
4	10	517	5/8	20	260	R58AAEM306	N3	L3	45	580	R58AAEM406	N6	L6
6	10	667	5/8	17	435	R58AAEM406	N5	L5	13	325	R58AAEM409	N4	L4
				2-Way Transverse Brace Pattern (B2.12,B2.13)					**4-Way Transverse, Longit. Brace Pattern (B4.0,B4.1,B4.3)**				
1.5	8	30	3/8	15	17	R38AAEM306	N1	L1	42	50	R38AAEM306	N1	L1
2	10	57	3/8	16	29	R38AAEM306	N1	L1	48	88	R38AAEM306	N1	L1
2.5	10	79	1/2	19	48	R12AAEM306	N1	L1	56	143	R12AAEM306	N2	L2
3	10	108	1/2	21	73	R12AAEM306	N1	L1	54	188	R12AAEM306	N2	L2
4	10	199	5/8	20	130	R58AAEM306	N2	L2	45	290	R58AAEM306	N3	L3
6	10	395	5/8	17	218	R58AAEM306	N3	L3	13	163	R58AAEM306	N2	L2
				TRANSVERSE, LONGITUDINAL BRACING REQUIREMENTS									
				4-Way Splayed Brace Pattern (B4.13,B4.14)									
1.5	8	30	3/8	15	25	R38AAEM306	N1	L1					
2	10	57	3/8	16	41	R38AAEM306	N1	L1					
2.5	10	79	1/2	19	68	R12AAEM306	N1	L1					
3	10	108	1/2	21	104	R12AAEM306	N2	L2					
4	10	199	5/8	20	184	R58AAEM306	N2	L2					
6	10	395	5/8	17	308	R58AAEM409	N4	L4					

SINGLE HUNG PIPE, TYPE K AND TYPE L COPPER TUBING (GAS PIPING) [10] — MAXIMUM SEISMIC DESIGN FORCE = 0.75 G's

				1-Way Transverse Brace Pattern (B1.4, B1.5)					**2-Way Trans., Longit. Brace Pattern (B3.0,B3.1,B3.3)**				
1.5	8	58	3/8	23	27	R38AAEM306	N1	L1	69	82	R38AAEM306	N1	L1
2	10	104	3/8	27	48	R38AAEM306	N1	L1	81	145	R38AAEM306	N2	L2
2.5	10	162	1/2	31	77	R12AAEM306	N1	L1	92	232	R12AAEM306	N3	L3
3	10	239	1/2	34	117	R12AAEM306	N2	L2	101	351	R12AAEM406	N4	L4
4	10	398	5/8	39	221	R58AAEM306	N3	L3	103	580	R58AAEM406	N6	L6
6	10	459	5/8	36	435	R58AAEM406	N5	L5	27	325	R58AAEM409	N4	L4
				2-Way Transverse Brace Pattern (B2.12,B2.13)					**4-Way Transverse, Longit. Brace Pattern (B4.0,B4.1,B4.3)**				
1.5	8	15	3/8	23	14	R38AAEM306	N1	L1	69	41	R38AAEM306	N1	L1
2	10	28	3/8	27	24	R38AAEM306	N1	L1	81	73	R38AAEM306	N1	L1
2.5	10	39	1/2	31	39	R12AAEM306	N1	L1	92	116	R12AAEM306	N2	L2
3	10	54	1/2	34	58	R12AAEM306	N1	L1	101	175	R12AAEM306	N2	L2
4	10	88	5/8	39	110	R58AAEM306	N2	L2	103	290	R58AAEM306	N3	L3
6	10	187	5/8	36	218	R58AAEM306	N3	L3	27	163	R58AAEM306	N2	L2
				TRANSVERSE, LONGITUDINAL BRACING REQUIREMENTS									
				4-Way Splayed Brace Pattern (B4.13,B4.14)									
1.5	8	15	3/8	23	19	R38AAEM306	N1	L1					
2	10	28	3/8	27	34	R38AAEM306	N1	L1					
2.5	10	39	1/2	31	55	R12AAEM306	N1	L1					
3	10	54	1/2	34	83	R12AAEM306	N1	L1					
4	10	88	5/8	39	156	R58AAEM306	N2	L2					
6	10	187	5/8	36	308	R58AAEM409	N4	L4					

1. TVL = DL + Fv + ($0.2S_{DS}$/1.4 x Wp). All Terms Are Working Loads.
2. Reductions In Actual Installed Brace Spacing Will Result In An Equal Percentage Reduction In Brace Reaction. As An Option When This Occurs ISAT May Substitute An Alternate Anchorage From Tables D1 or D2 Which Meets or Exceeds The Lowered Brace Reaction.
3. At Max. 30 Degree Brace Inclination.
4. Min. 3,000 psi NWC. Any "N Series" Connection May Be Utilized Having A Numeric Designation Equal To Or Higher Than That Shown.
5. Min. 3,000 psi NWC or LWC. Any "L Series" Connection May Be Utilized Having A Numeric Designation Equal To Or Higher Than That Shown.
6. As An Alternate, Brace Anchorage Connections To Structure May Be Employed Using Any Detail From Structural Connections Section "D" Series Details Where Assembly Design Value Meets Or Exceeds Brace Reaction.
7. For Trade Specific Bracing Installation Notes, Refer To Page 10.1
8. Utilize Any "G" Series Vertical Support Connection Having A Design Value Equal To Or Greater Than The Corresponding "Rod Total Vertical Load".
9. Based on Water Filled + Insulated Pipe Weight. Refer to X-Series Weight Charts.
10. Based on Empty Pipe Weight. Refer to X-Series Weight Charts.

REGISTERED PROFESSIONAL ENGINEER — MARCIN WASAZNIK — S 6612 — STRUCTURAL — STATE OF CALIFORNIA

ISAT — A Division of Tomarco Contractor Specialties

International Seismic Application Technology
14848 Northam Street, La Mirada, CA 90638
877-999-4728 (Toll Free) 714-523-0845 (Fax)
www.isatsb.com

Rev. 2
03/12/19
Page
C9-0.75-30

RIGID BRACING REQUIREMENTS [7]

SINGLE HUNG PIPE, TYPE K AND TYPE L COPPER TUBING (WATER FILLED + INSULATED) [9] — MAXIMUM SEISMIC DESIGN FORCE = 0.75 G's

Requires Use of ISAT Seismic Brackets. Use of Any Non-ISAT Bracket Voids Engineering. 2013 California Building Code Compliant

Maximum Pipe Diameter (in.)	Max. Vertical Support Spacing (ft.)	Rod [1] Total Vertical Load (lbs)	Min. [8] Vertical Support Rod Dia. (in.)	TRANSVERSE BRACING REQUIREMENTS: Max. [2] Brace Spacing (ft.)	Brace [3] Reaction P (lbs)	Min. Brace Assembly E - Pages	Min. Brace Anchorage [6]: Form Pour [4] Deck Page D1	Metal [5] Deck Page D2	LONGITUDINAL BRACING REQUIREMENTS: Max. [2] Brace Spacing (ft.)	Brace [3] Reaction P (lbs)	Min. Brace Assembly E - Pages	Min. Brace Anchorage [6]: Form Pour [4] Deck Page D1	Metal [5] Deck Page D2
				1-Way Transverse Brace Pattern (B1.4, B1.5)					**2-Way Trans., Longit. Brace Pattern (B3.0,B3.1,B3.3)**				
1.5	8	139	3/8	15	47	R38AAEM306	N1	L1	42	135	R38AAEM306	N2	L2
2	10	248	3/8	16	79	R38AAEM306	N1	L1	48	236	R38AAEM306	N3	L3
2.5	10	391	1/2	19	129	R12AAEM306	N2	L2	56	386	R12AAEM406	N4	L4
3	10	524	1/2	21	198	R12AAEM306	N2	L2	54	505	R12AAEM406	N6	L6
4	10	854	5/8	20	350	R58AAEM406	N4	L4	45	780	R58AAEM509	N8	L8
6	10	954	5/8	17	585	R58AAEM406	N6	L6	13	435	R58AAEM406	N5	L5
				2-Way Transverse Brace Pattern (B2.12,B2.13)					**4-Way Transverse, Longit. Brace Pattern (B4.0,B4.1,B4.3)**				
1.5	8	30	3/8	15	23	R38AAEM306	N1	L1	42	68	R38AAEM306	N1	L1
2	10	57	3/8	16	39	R38AAEM306	N1	L1	48	118	R38AAEM306	N2	L2
2.5	10	79	1/2	19	64	R12AAEM306	N1	L1	56	193	R12AAEM306	N2	L2
3	10	108	1/2	21	99	R12AAEM306	N1	L1	54	253	R12AAEM306	N3	L3
4	10	199	5/8	20	175	R58AAEM306	N2	L2	45	390	R58AAEM406	N4	L4
6	10	395	5/8	17	293	R58AAEM306	N3	L3	13	218	R58AAEM306	N3	L3
				TRANSVERSE, LONGITUDINAL BRACING REQUIREMENTS									
				4-Way Splayed Brace Pattern (B4.13,B4.14)									
1.5	8	30	3/8	15	33	R38AAEM306	N1	L1					
2	10	57	3/8	16	56	R38AAEM306	N1	L1					
2.5	10	79	1/2	19	91	R12AAEM306	N1	L1					
3	10	108	1/2	21	140	R12AAEM306	N2	L2					
4	10	199	5/8	20	247	R58AAEM306	N3	L3					
6	10	395	5/8	17	414	R58AAEM406	N5	L5					

SINGLE HUNG PIPE, TYPE K AND TYPE L COPPER TUBING (GAS PIPING) [10] — MAXIMUM SEISMIC DESIGN FORCE = 0.75 G's

				1-Way Transverse Brace Pattern (B1.4, B1.5)					**2-Way Trans., Longit. Brace Pattern (B3.0,B3.1,B3.3)**				
1.5	8	103	3/8	23	37	R38AAEM306	N1	L1	69	110	R38AAEM306	N2	L2
2	10	186	3/8	27	65	R38AAEM306	N1	L1	81	195	R38AAEM306	N2	L2
2.5	10	292	1/2	31	104	R12AAEM306	N2	L2	92	312	R12AAEM409	N4	L4
3	10	436	1/2	34	158	R12AAEM306	N2	L2	101	473	R12AAEM406	N5	L5
4	10	727	5/8	39	298	R58AAEM306	N3	L3	103	780	R58AAEM509	N8	L8
6	10	746	5/8	36	585	R58AAEM406	N6	L6	27	435	R58AAEM406	N5	L5
				2-Way Transverse Brace Pattern (B2.12,B2.13)					**4-Way Transverse, Longit. Brace Pattern (B4.0,B4.1,B4.3)**				
1.5	8	15	3/8	23	18	R38AAEM306	N1	L1	69	55	R38AAEM306	N1	L1
2	10	28	3/8	27	33	R38AAEM306	N1	L1	81	98	R38AAEM306	N1	L1
2.5	10	39	1/2	31	52	R12AAEM306	N1	L1	92	156	R12AAEM306	N2	L2
3	10	54	1/2	34	79	R12AAEM306	N1	L1	101	236	R12AAEM306	N3	L3
4	10	88	5/8	39	149	R58AAEM306	N2	L2	103	390	R58AAEM406	N4	L4
6	10	187	5/8	36	293	R58AAEM306	N3	L3	27	218	R58AAEM306	N3	L3
				TRANSVERSE, LONGITUDINAL BRACING REQUIREMENTS									
				4-Way Splayed Brace Pattern (B4.13,B4.14)									
1.5	8	15	3/8	23	26	R38AAEM306	N1	L1					
2	10	28	3/8	27	46	R38AAEM306	N1	L1					
2.5	10	39	1/2	31	74	R12AAEM306	N1	L1					
3	10	54	1/2	34	111	R12AAEM306	N2	L2					
4	10	88	5/8	39	210	R58AAEM306	N3	L3					
6	10	187	5/8	36	414	R58AAEM406	N5	L5					

1. TVL = DL + Fv + ($0.2S_{DS}$/1.4 x Wp). All Terms Are Working Loads.
2. Reductions In Actual Installed Brace Spacing Will Result In An Equal Percentage Reduction In Brace Reaction. As An Option When This Occurs ISAT May Substitute An Alternate Anchorage From Tables D1 or D2 Which Meets or Exceeds The Lowered Brace Reaction.
3. At Max. 50 Degree Brace Inclination.
4. Min. 3,000 psi NWC. Any "N Series" Connection May Be Utilized Having A Numeric Designation Equal To Or Higher Than That Shown.
5. Min. 3,000 psi NWC or LWC. Any "L Series" Connection May Be Utilized Having A Numeric Designation Equal To Or Higher Than That Shown.
6. As An Alternate, Brace Anchorage Connections To Structure May Be Employed Using Any Detail From Structural Connections Section "D" Series Details Where Assembly Design Value Meets Or Exceeds Brace Reaction.
7. For Trade Specific Bracing Installation Notes, Refer To Page 10.1
8. Utilize Any "G" Series Vertical Support Connection Having A Design Value Equal To Or Greater Than The Corresponding "Rod Total Vertical Load".
9. Based on Water Filled + Insulated Pipe Weight. Refer to X-Series Weight Charts.
10. Based on Empty Pipe Weight. Refer to X-Series Weight Charts.

REGISTERED PROFESSIONAL ENGINEER MARCIN WASAZNIK S 6612 STRUCTURAL STATE OF CALIFORNIA

ISAT
A Division of Tomarco Contractor Specialties
International Seismic Application Technology
14848 Northam Street, La Mirada, CA 90638
877-999-4728 (Toll Free) 714-523-0845 (Fax)
www.isatsb.com

Rev. 2
03/12/19
Page
C9-0.75-45

REVIEWED FOR CODE COMPLIANCE OPM-0403 By William Staehlin Date 01/26/2024 CALIFORNIA BUILDING CODE 2019

RIGID BRACING REQUIREMENTS [7]

SINGLE HUNG PIPE, TYPE K AND TYPE L COPPER TUBING (WATER FILLED + INSULATED) [9] — MAXIMUM SEISMIC DESIGN FORCE = 0.75 G's

Requires Use of ISAT Seismic Brackets. Use of Any Non-ISAT Bracket Voids Engineering. 2013 California Building Code Compliant

Maximum Pipe Diameter (in.)	Max. Vertical Support Spacing (ft.)	Rod [1] Total Vertical Load (lbs)	Min. [8] Vertical Support Rod Dia. (in.)	TRANSVERSE BRACING REQUIREMENTS: Max. [2] Brace Spacing (ft.)	Brace [3] Reaction P (lbs)	Min. Brace Assembly E - Pages	Min. Brace Anchorage [6]: Form Pour [4] Deck Page D1	Metal [5] Deck Page D2	LONGITUDINAL BRACING REQUIREMENTS: Max. [2] Brace Spacing (ft.)	Brace [3] Reaction P (lbs)	Min. Brace Assembly E - Pages	Min. Brace Anchorage [6]: Form Pour [4] Deck Page D1	Metal [5] Deck Page D2
				1-Way Transverse Brace Pattern (B1.4, B1.5)					**2-Way Trans., Longit. Brace Pattern (B3.0,B3.1,B3.3)**				
1.5	8	170	3/8	15	60	R38AAEM306	N1	L1	36	150	R38AAEM306	N2	L2
2	10	334	3/8	16	101	R38AAEM306	N2	L2	48	304	R38AAEM409	N4	L4
2.5	10	533	1/2	19	165	R12AAEM306	N2	L2	56	496	R12AAEM406	N5	L5
3	10	649	1/2	21	254	R12AAEM306	N3	L3	47	570	R12AAEM406	N6	L6
4	10	1,038	5/8	18	395	R58AAEM406	N4	L4	40	885	R58AAEM506	N9	L9
6	10	1,113	5/8	15	665	R58AAEM509	N7	L7	11	495	R58AAEM406	N5	L5
				2-Way Transverse Brace Pattern (B2.12,B2.13)					**4-Way Transverse, Longit. Brace Pattern (B4.0,B4.1,B4.3)**				
1.5	8	30	3/8	15	30	R38AAEM306	N1	L1	36	75	R38AAEM306	N1	L1
2	10	57	3/8	16	51	R38AAEM306	N1	L1	48	152	R38AAEM306	N2	L2
2.5	10	79	1/2	19	83	R12AAEM306	N1	L1	56	248	R12AAEM306	N3	L3
3	10	108	1/2	21	127	R12AAEM306	N2	L2	47	285	R12AAEM306	N3	L3
4	10	199	5/8	18	198	R58AAEM306	N2	L2	40	443	R58AAEM406	N5	L5
6	10	395	5/8	15	333	R58AAEM406	N4	L4	11	248	R58AAEM306	N3	L3
				TRANSVERSE, LONGITUDINAL BRACING REQUIREMENTS									
				4-Way Splayed Brace Pattern (B4.13,B4.14)									
1.5	8	30	3/8	15	43	R38AAEM306	N1	L1					
2	10	57	3/8	16	72	R38AAEM306	N1	L1					
2.5	10	79	1/2	19	117	R12AAEM306	N2	L2					
3	10	108	1/2	21	180	R12AAEM306	N2	L2					
4	10	199	5/8	18	279	R58AAEM306	N3	L3					
6	10	395	5/8	15	470	R58AAEM406	N5	L5					

SINGLE HUNG PIPE, TYPE K AND TYPE L COPPER TUBING (GAS PIPING) [10] — MAXIMUM SEISMIC DESIGN FORCE = 0.75 G's

				1-Way Transverse Brace Pattern (B1.4, B1.5)					**2-Way Trans., Longit. Brace Pattern (B3.0,B3.1,B3.3)**				
1.5	8	144	3/8	23	47	R38AAEM306	N1	L1	69	141	R38AAEM306	N2	L2
2	10	257	3/8	27	84	R38AAEM306	N1	L1	81	251	R38AAEM306	N3	L3
2.5	10	406	1/2	31	134	R12AAEM306	N2	L2	92	402	R12AAEM406	N5	L5
3	10	578	1/2	34	203	R12AAEM306	N3	L3	95	570	R12AAEM406	N6	L6
4	10	923	5/8	39	382	R58AAEM406	N4	L4	91	885	R58AAEM506	N9	L9
6	10	905	5/8	32	665	R58AAEM509	N7	L7	24	495	R58AAEM406	N5	L5
				2-Way Transverse Brace Pattern (B2.12,B2.13)					**4-Way Transverse, Longit. Brace Pattern (B4.0,B4.1,B4.3)**				
1.5	8	15	3/8	23	24	R38AAEM306	N1	L1	69	71	R38AAEM306	N1	L1
2	10	28	3/8	27	42	R38AAEM306	N1	L1	81	126	R38AAEM306	N2	L2
2.5	10	39	1/2	31	67	R12AAEM306	N1	L1	92	201	R12AAEM306	N3	L3
3	10	54	1/2	34	101	R12AAEM306	N2	L2	95	285	R12AAEM306	N3	L3
4	10	88	5/8	39	191	R58AAEM306	N2	L2	91	443	R58AAEM406	N5	L5
6	10	187	5/8	32	333	R58AAEM406	N4	L4	24	248	R58AAEM306	N3	L3
				TRANSVERSE, LONGITUDINAL BRACING REQUIREMENTS									
				4-Way Splayed Brace Pattern (B4.13,B4.14)									
1.5	8	15	3/8	23	33	R38AAEM306	N1	L1					
2	10	28	3/8	27	59	R38AAEM306	N1	L1					
2.5	10	39	1/2	31	95	R12AAEM306	N1	L1					
3	10	54	1/2	34	143	R12AAEM306	N2	L2					
4	10	88	5/8	39	270	R58AAEM306	N3	L3					
6	10	187	5/8	32	470	R58AAEM406	N5	L5					

1. TVL = DL + Fv + ($0.2S_{DS}$/1.4 x Wp). All Terms Are Working Loads.
2. Reductions In Actual Installed Brace Spacing Will Result In An Equal Percentage Reduction In Brace Reaction. As An Option When This Occurs ISAT May Substitute An Alternate Anchorage From Tables D1 or D2 Which Meets or Exceeds The Lowered Brace Reaction.
3. At Max. 60 Degree Brace Inclination.
4. Min. 3,000 psi NWC. Any "N Series" Connection May Be Utilized Having A Numeric Designation Equal To Or Higher Than That Shown.
5. Min. 3,000 psi NWC or LWC. Any "L Series" Connection May Be Utilized Having A Numeric Designation Equal To Or Higher Than That Shown.
6. As An Alternate, Brace Anchorage Connections To Structure May Be Employed Using Any Detail From Structural Connections Section "D" Series Details Where Assembly Design Value Meets Or Exceeds Brace Reaction.
7. For Trade Specific Bracing Installation Notes, Refer To Page 10.1
8. Utilize Any "G" Series Vertical Support Connection Having A Design Value Equal To Or Greater Than The Corresponding "Rod Total Vertical Load".
9. Based on Water Filled + Insulated Pipe Weight. Refer to X-Series Weight Charts.
10. Based on Empty Pipe Weight. Refer to X-Series Weight Charts.

REGISTERED PROFESSIONAL ENGINEER — MARCIN WASAZNIK — S 6612 — STRUCTURAL — STATE OF CALIFORNIA

ISAT — A Division of Tomarco Contractor Specialties

International Seismic Application Technology
14848 Northam Street, La Mirada, CA 90638
877-999-4728 (Toll Free) 714-523-0845 (Fax)
www.isatsb.com

Rev. 2
03/12/19
Page
C9-0.75-60

RIGID BRACING REQUIREMENTS [7]

SINGLE HUNG PIPE, TYPE K AND TYPE L COPPER TUBING (WATER FILLED + INSULATED) [9] — MAXIMUM SEISMIC DESIGN FORCE = 1.00 G's

Requires Use of ISAT Seismic Brackets. Use of Any Non-ISAT Bracket Voids Engineering. 2013 California Building Code Compliant

Maximum Pipe Diameter (in.)	Max. Vertical Support Spacing (ft.)	Rod [1] Total Vertical Load (lbs)	Min. [8] Vertical Support Rod Dia. (in.)	TRANSVERSE BRACING REQUIREMENTS: Max. [2] Brace Spacing (ft.)	Brace [3] Reaction P (lbs)	Min. Brace Assembly E - Pages	Min. Brace Anchorage [6]: Form Pour [4] Deck Page D1	Metal [5] Deck Page D2	LONGITUDINAL BRACING REQUIREMENTS: Max. [2] Brace Spacing (ft.)	Brace [3] Reaction P (lbs)	Min. Brace Assembly E - Pages	Min. Brace Anchorage [6]: Form Pour [4] Deck Page D1	Metal [5] Deck Page D2
				1-Way Transverse Brace Pattern (B1.4, B1.5)					**2-Way Trans., Longit. Brace Pattern (B3.0,B3.1,B3.3)**				
1.5	8	84	3/8	13	40	R38AAEM306	N1	L1	31	100	R38AAEM306	N2	L2
2	10	164	3/8	14	67	R38AAEM306	N1	L1	42	202	R38AAEM306	N3	L3
2.5	10	254	1/2	16	110	R12AAEM306	N2	L2	49	331	R12AAEM406	N4	L4
3	10	314	1/2	18	169	R12AAEM306	N2	L2	40	375	R12AAEM406	N4	L4
4	10	517	5/8	15	260	R58AAEM306	N3	L3	34	580	R58AAEM406	N6	L6
6	10	667	5/8	13	435	R58AAEM406	N5	L5	10	325	R58AAEM409	N4	L4
				2-Way Transverse Brace Pattern (B2.12,B2.13)					**4-Way Transverse, Longit. Brace Pattern (B4.0,B4.1,B4.3)**				
1.5	8	30	3/8	13	20	R38AAEM306	N1	L1	31	50	R38AAEM306	N1	L1
2	10	57	3/8	14	34	R38AAEM306	N1	L1	42	101	R38AAEM306	N2	L2
2.5	10	79	1/2	16	55	R12AAEM306	N1	L1	49	165	R12AAEM306	N2	L2
3	10	108	1/2	18	85	R12AAEM306	N1	L1	40	188	R12AAEM306	N2	L2
4	10	199	5/8	15	130	R58AAEM306	N2	L2	34	290	R58AAEM306	N3	L3
6	10	395	5/8	13	218	R58AAEM306	N3	L3	10	163	R58AAEM306	N2	L2
				TRANSVERSE, LONGITUDINAL BRACING REQUIREMENTS									
				4-Way Splayed Brace Pattern (B4.13,B4.14)									
1.5	8	30	3/8	13	28	R38AAEM306	N1	L1					
2	10	57	3/8	14	48	R38AAEM306	N1	L1					
2.5	10	79	1/2	16	78	R12AAEM306	N1	L1					
3	10	108	1/2	18	120	R12AAEM306	N2	L2					
4	10	199	5/8	15	184	R58AAEM306	N2	L2					
6	10	395	5/8	13	308	R58AAEM409	N4	L4					

SINGLE HUNG PIPE, TYPE K AND TYPE L COPPER TUBING (GAS PIPING) [10] — MAXIMUM SEISMIC DESIGN FORCE = 1.00 G's

				1-Way Transverse Brace Pattern (B1.4, B1.5)					**2-Way Trans., Longit. Brace Pattern (B3.0,B3.1,B3.3)**				
1.5	8	64	3/8	20	31	R38AAEM306	N1	L1	60	94	R38AAEM306	N1	L1
2	10	116	3/8	23	56	R38AAEM306	N1	L1	70	167	R38AAEM306	N2	L2
2.5	10	181	1/2	26	89	R12AAEM306	N1	L1	79	268	R12AAEM306	N3	L3
3	10	253	1/2	29	135	R12AAEM306	N2	L2	81	375	R12AAEM406	N4	L4
4	10	405	5/8	34	255	R58AAEM306	N3	L3	77	580	R58AAEM406	N6	L6
6	10	459	5/8	27	435	R58AAEM406	N5	L5	20	325	R58AAEM409	N4	L4
				2-Way Transverse Brace Pattern (B2.12,B2.13)					**4-Way Transverse, Longit. Brace Pattern (B4.0,B4.1,B4.3)**				
1.5	8	15	3/8	20	16	R38AAEM306	N1	L1	60	47	R38AAEM306	N1	L1
2	10	28	3/8	23	28	R38AAEM306	N1	L1	70	84	R38AAEM306	N1	L1
2.5	10	39	1/2	26	45	R12AAEM306	N1	L1	79	134	R12AAEM306	N2	L2
3	10	54	1/2	29	68	R12AAEM306	N1	L1	81	188	R12AAEM306	N2	L2
4	10	88	5/8	34	127	R58AAEM306	N2	L2	77	290	R58AAEM306	N3	L3
6	10	187	5/8	27	218	R58AAEM306	N3	L3	20	163	R58AAEM306	N2	L2
				TRANSVERSE, LONGITUDINAL BRACING REQUIREMENTS									
				4-Way Splayed Brace Pattern (B4.13,B4.14)									
1.5	8	15	3/8	20	22	R38AAEM306	N1	L1					
2	10	28	3/8	23	39	R38AAEM306	N1	L1					
2.5	10	39	1/2	26	63	R12AAEM306	N1	L1					
3	10	54	1/2	29	95	R12AAEM306	N1	L1					
4	10	88	5/8	34	180	R58AAEM306	N2	L2					
6	10	187	5/8	27	308	R58AAEM409	N4	L4					

1. TVL = DL + Fv + ($0.2S_{DS}$/1.4 x Wp). All Terms Are Working Loads.
2. Reductions In Actual Installed Brace Spacing Will Result In An Equal Percentage Reduction In Brace Reaction. As An Option When This Occurs ISAT May Substitute An Alternate Anchorage From Tables D1 or D2 Which Meets or Exceeds The Lowered Brace Reaction.
3. At Max. 30 Degree Brace Inclination.
4. Min. 3,000 psi NWC. Any "N Series" Connection May Be Utilized Having A Numeric Designation Equal To Or Higher Than That Shown.
5. Min. 3,000 psi NWC or LWC. Any "L Series" Connection May Be Utilized Having A Numeric Designation Equal To Or Higher Than That Shown.
6. As An Alternate, Brace Anchorage Connections To Structure May Be Employed Using Any Detail From Structural Connections Section "D" Series Details Where Assembly Design Value Meets Or Exceeds Brace Reaction.
7. For Trade Specific Bracing Installation Notes, Refer To Page 10.1
8. Utilize Any "G" Series Vertical Support Connection Having A Design Value Equal To Or Greater Than The Corresponding "Rod Total Vertical Load".
9. Based on Water Filled + Insulated Pipe Weight. Refer to X-Series Weight Charts.
10. Based on Empty Pipe Weight. Refer to X-Series Weight Charts.

REGISTERED PROFESSIONAL ENGINEER MARCIN WASAZNIK S 6612 STRUCTURAL STATE OF CALIFORNIA

ISAT
A Division of Tomarco Contractor Specialties
International Seismic Application Technology
14848 Northam Street, La Mirada, CA 90638
877-999-4728 (Toll Free) 714-523-0845 (Fax)
www.isatsb.com

Rev. 2
03/12/19

OPM-0403 REVIEWED FOR CODE COMPLIANCE BY William Staehlin DATE 01/26/2024 CALIFORNIA BUILDING CODE 2019

RIGID BRACING REQUIREMENTS [7]

SINGLE HUNG PIPE, TYPE K AND TYPE L COPPER TUBING (WATER FILLED + INSULATED) [9] — MAXIMUM SEISMIC DESIGN FORCE = 1.00 G's

Requires Use of ISAT Seismic Brackets. Use of Any Non-ISAT Bracket Voids Engineering. 2013 California Building Code Compliant

Maximum Pipe Diameter (in.)	Max. Vertical Support Spacing (ft.)	Rod [1] Total Vertical Load (lbs)	Min. [8] Vertical Support Rod Dia. (in.)	TRANSVERSE BRACING REQUIREMENTS: Max. [2] Brace Spacing (ft.)	Brace [3] Reaction P (lbs)	Min. Brace Assembly E - Pages	Min. Brace Anchorage [6]: Form Pour [4] Deck Page D1	Metal [5] Deck Page D2	LONGITUDINAL BRACING REQUIREMENTS: Max. [2] Brace Spacing (ft.)	Brace [3] Reaction P (lbs)	Min. Brace Assembly E - Pages	Min. Brace Anchorage [6]: Form Pour [4] Deck Page D1	Metal [5] Deck Page D2
				1-Way Transverse Brace Pattern (B1.4, B1.5)					**2-Way Trans., Longit. Brace Pattern (B3.0,B3.1,B3.3)**				
1.5	8	141	3/8	13	54	R38AAEM306	N1	L1	31	135	R38AAEM306	N2	L2
2	10	277	3/8	14	91	R38AAEM306	N1	L1	42	273	R38AAEM306	N3	L3
2.5	10	439	1/2	16	149	R12AAEM306	N2	L2	49	446	R12AAEM406	N5	L5
3	10	533	1/2	18	228	R12AAEM306	N3	L3	40	505	R12AAEM406	N6	L6
4	10	854	5/8	15	350	R58AAEM406	N4	L4	34	780	R58AAEM509	N8	L8
6	10	954	5/8	13	585	R58AAEM406	N6	L6	10	435	R58AAEM406	N5	L5
				2-Way Transverse Brace Pattern (B2.12,B2.13)					**4-Way Transverse, Longit. Brace Pattern (B4.0,B4.1,B4.3)**				
1.5	8	30	3/8	13	27	R38AAEM306	N1	L1	31	68	R38AAEM306	N1	L1
2	10	57	3/8	14	45	R38AAEM306	N1	L1	42	136	R38AAEM306	N2	L2
2.5	10	79	1/2	16	74	R12AAEM306	N1	L1	49	223	R12AAEM306	N3	L3
3	10	108	1/2	18	114	R12AAEM306	N2	L2	40	253	R12AAEM306	N3	L3
4	10	199	5/8	15	175	R58AAEM306	N2	L2	34	390	R58AAEM406	N4	L4
6	10	395	5/8	13	293	R58AAEM306	N3	L3	10	218	R58AAEM306	N3	L3
				TRANSVERSE, LONGITUDINAL BRACING REQUIREMENTS									
				4-Way Splayed Brace Pattern (B4.13,B4.14)									
1.5	8	30	3/8	13	38	R38AAEM306	N1	L1					
2	10	57	3/8	14	64	R38AAEM306	N1	L1					
2.5	10	79	1/2	16	105	R12AAEM306	N2	L2					
3	10	108	1/2	18	161	R12AAEM306	N2	L2					
4	10	199	5/8	15	247	R58AAEM306	N3	L3					
6	10	395	5/8	13	414	R58AAEM406	N5	L5					

SINGLE HUNG PIPE, TYPE K AND TYPE L COPPER TUBING (GAS PIPING) [10] — MAXIMUM SEISMIC DESIGN FORCE = 1.00 G's

				1-Way Transverse Brace Pattern (B1.4, B1.5)					**2-Way Trans., Longit. Brace Pattern (B3.0,B3.1,B3.3)**				
1.5	8	117	3/8	20	42	R38AAEM306	N1	L1	60	127	R38AAEM306	N2	L2
2	10	210	3/8	23	75	R38AAEM306	N1	L1	70	226	R38AAEM306	N3	L3
2.5	10	331	1/2	26	120	R12AAEM306	N2	L2	79	361	R12AAEM406	N4	L4
3	10	465	1/2	29	182	R12AAEM306	N2	L2	81	505	R12AAEM406	N6	L6
4	10	741	5/8	34	344	R58AAEM406	N4	L4	77	780	R58AAEM509	N8	L8
6	10	746	5/8	27	585	R58AAEM406	N6	L6	20	435	R58AAEM406	N5	L5
				2-Way Transverse Brace Pattern (B2.12,B2.13)					**4-Way Transverse, Longit. Brace Pattern (B4.0,B4.1,B4.3)**				
1.5	8	15	3/8	20	21	R38AAEM306	N1	L1	60	63	R38AAEM306	N1	L1
2	10	28	3/8	23	38	R38AAEM306	N1	L1	70	113	R38AAEM306	N2	L2
2.5	10	39	1/2	26	60	R12AAEM306	N1	L1	79	180	R12AAEM306	N2	L2
3	10	54	1/2	29	91	R12AAEM306	N1	L1	81	253	R12AAEM306	N3	L3
4	10	88	5/8	34	172	R58AAEM306	N2	L2	77	390	R58AAEM406	N4	L4
6	10	187	5/8	27	293	R58AAEM306	N3	L3	20	218	R58AAEM306	N3	L3
				TRANSVERSE, LONGITUDINAL BRACING REQUIREMENTS									
				4-Way Splayed Brace Pattern (B4.13,B4.14)									
1.5	8	15	3/8	20	30	R38AAEM306	N1	L1					
2	10	28	3/8	23	53	R38AAEM306	N1	L1					
2.5	10	39	1/2	26	85	R12AAEM306	N1	L1					
3	10	54	1/2	29	129	R12AAEM306	N2	L2					
4	10	88	5/8	34	243	R58AAEM306	N3	L3					
6	10	187	5/8	27	414	R58AAEM406	N5	L5					

1. TVL = DL + Fv + ($0.2S_{DS}$/1.4 x Wp). All Terms Are Working Loads.
2. Reductions In Actual Installed Brace Spacing Will Result In An Equal Percentage Reduction In Brace Reaction. As An Option When This Occurs ISAT May Substitute An Alternate Anchorage From Tables D1 or D2 Which Meets or Exceeds The Lowered Brace Reaction.
3. At Max. 50 Degree Brace Inclination.
4. Min. 3,000 psi NWC. Any "N Series" Connection May Be Utilized Having A Numeric Designation Equal To Or Higher Than That Shown.
5. Min. 3,000 psi NWC or LWC. Any "L Series" Connection May Be Utilized Having A Numeric Designation Equal To Or Higher Than That Shown.
6. As An Alternate, Brace Anchorage Connections To Structure May Be Employed Using Any Detail From Structural Connections Section "D" Series Details Where Assembly Design Value Meets Or Exceeds Brace Reaction.
7. For Trade Specific Bracing Installation Notes, Refer To Page 10.1
8. Utilize Any "G" Series Vertical Support Connection Having A Design Value Equal To Or Greater Than The Corresponding "Rod Total Vertical Load".
9. Based on Water Filled + Insulated Pipe Weight. Refer to X-Series Weight Charts.
10. Based on Empty Pipe Weight. Refer to X-Series Weight Charts.

REGISTERED PROFESSIONAL ENGINEER — MARCIN WASAZNIK — S 6612 — STRUCTURAL — STATE OF CALIFORNIA

ISAT — A Division of Tomarco Contractor Specialties

International Seismic Application Technology
14848 Northam Street, La Mirada, CA 90638
877-999-4728 (Toll Free) 714-523-0845 (Fax)
www.isatsb.com

Rev. 2
03/12/19

RIGID BRACING REQUIREMENTS [7]

SINGLE HUNG PIPE, TYPE K AND TYPE L COPPER TUBING (WATER FILLED + INSULATED) [9] — MAXIMUM SEISMIC DESIGN FORCE = 1.00 G's

Requires Use of ISAT Seismic Brackets. Use of Any Non-ISAT Bracket Voids Engineering. 2013 California Building Code Compliant

Maximum Pipe Diameter (in.)	Max. Vertical Support Spacing (ft.)	Rod [1] Total Vertical Load (lbs)	Min. [8] Vertical Support Rod Dia. (in.)	TRANSVERSE BRACING REQUIREMENTS: Max. [2] Brace Spacing (ft.)	Brace [3] Reaction P (lbs)	Min. Brace Assembly E - Pages	Min. Brace Anchorage [6]: Form Pour [4] Deck Page D1	Metal [5] Deck Page D2	LONGITUDINAL BRACING REQUIREMENTS: Max. [2] Brace Spacing (ft.)	Brace [3] Reaction P (lbs)	Min. Brace Assembly E - Pages	Min. Brace Anchorage [6]: Form Pour [4] Deck Page D1	Metal [5] Deck Page D2
				1-Way Transverse Brace Pattern (B1.4, B1.5)					**2-Way Trans., Longit. Brace Pattern (B3.0,B3.1,B3.3)**				
1.5	8	173	3/8	13	70	R38AAEM306	N1	L1	27	150	R38AAEM306	N2	L2
2	10	377	3/8	14	117	R38AAEM306	N2	L2	42	351	R38AAEM406	N4	L4
2.5	10	603	1/2	16	191	R12AAEM306	N2	L2	49	573	R12AAEM406	N6	L6
3	10	664	1/2	18	294	R12AAEM306	N3	L3	35	570	R12AAEM406	N6	L6
4	10	1,038	5/8	13	395	R58AAEM406	N4	L4	30	885	R58AAEM506	N9	L9
6	10	1,113	5/8	11	665	R58AAEM509	N7	L7	8	495	R58AAEM406	N5	L5
				2-Way Transverse Brace Pattern (B2.12,B2.13)					**4-Way Transverse, Longit. Brace Pattern (B4.0,B4.1,B4.3)**				
1.5	8	30	3/8	13	35	R38AAEM306	N1	L1	27	75	R38AAEM306	N1	L1
2	10	57	3/8	14	58	R38AAEM306	N1	L1	42	175	R38AAEM306	N2	L2
2.5	10	79	1/2	16	96	R12AAEM306	N1	L1	49	287	R12AAEM306	N3	L3
3	10	108	1/2	18	147	R12AAEM306	N2	L2	35	285	R12AAEM306	N3	L3
4	10	199	5/8	13	198	R58AAEM306	N2	L2	30	443	R58AAEM406	N5	L5
6	10	395	5/8	11	333	R58AAEM406	N4	L4	8	248	R58AAEM306	N3	L3
				TRANSVERSE, LONGITUDINAL BRACING REQUIREMENTS									
				4-Way Splayed Brace Pattern (B4.13,B4.14)									
1.5	8	30	3/8	13	49	R38AAEM306	N1	L1					
2	10	57	3/8	14	83	R38AAEM306	N1	L1					
2.5	10	79	1/2	16	135	R12AAEM306	N2	L2					
3	10	108	1/2	18	208	R12AAEM306	N3	L3					
4	10	199	5/8	13	279	R58AAEM306	N3	L3					
6	10	395	5/8	11	470	R58AAEM406	N5	L5					

SINGLE HUNG PIPE, TYPE K AND TYPE L COPPER TUBING (GAS PIPING) [10] — MAXIMUM SEISMIC DESIGN FORCE = 1.00 G's

				1-Way Transverse Brace Pattern (B1.4, B1.5)					**2-Way Trans., Longit. Brace Pattern (B3.0,B3.1,B3.3)**				
1.5	8	153	3/8	20	54	R38AAEM306	N1	L1	55	150	R38AAEM306	N2	L2
2	10	293	3/8	23	97	R38AAEM306	N1	L1	70	290	R38AAEM306	N3	L3
2.5	10	463	1/2	26	155	R12AAEM306	N2	L2	79	464	R12AAEM406	N5	L5
3	10	588	1/2	29	234	R12AAEM306	N3	L3	71	570	R12AAEM406	N6	L6
4	10	927	5/8	30	395	R58AAEM406	N4	L4	68	885	R58AAEM506	N9	L9
6	10	905	5/8	24	665	R58AAEM509	N7	L7	18	495	R58AAEM406	N5	L5
				2-Way Transverse Brace Pattern (B2.12,B2.13)					**4-Way Transverse, Longit. Brace Pattern (B4.0,B4.1,B4.3)**				
1.5	8	15	3/8	20	27	R38AAEM306	N1	L1	55	75	R38AAEM306	N1	L1
2	10	28	3/8	23	48	R38AAEM306	N1	L1	70	145	R38AAEM306	N2	L2
2.5	10	39	1/2	26	77	R12AAEM306	N1	L1	79	232	R12AAEM306	N3	L3
3	10	54	1/2	29	117	R12AAEM306	N2	L2	71	285	R12AAEM306	N3	L3
4	10	88	5/8	30	198	R58AAEM306	N2	L2	68	443	R58AAEM406	N5	L5
6	10	187	5/8	24	333	R58AAEM406	N4	L4	18	248	R58AAEM306	N3	L3
				TRANSVERSE, LONGITUDINAL BRACING REQUIREMENTS									
				4-Way Splayed Brace Pattern (B4.13,B4.14)									
1.5	8	15	3/8	20	38	R38AAEM306	N1	L1					
2	10	28	3/8	23	68	R38AAEM306	N1	L1					
2.5	10	39	1/2	26	109	R12AAEM306	N2	L2					
3	10	54	1/2	29	165	R12AAEM306	N2	L2					
4	10	88	5/8	30	279	R58AAEM306	N3	L3					
6	10	187	5/8	24	470	R58AAEM406	N5	L5					

1. TVL = DL + Fv + ($0.2S_{DS}$/1.4 x Wp). All Terms Are Working Loads.
2. Reductions In Actual Installed Brace Spacing Will Result In An Equal Percentage Reduction In Brace Reaction. As An Option When This Occurs ISAT May Substitute An Alternate Anchorage From Tables D1 or D2 Which Meets or Exceeds The Lowered Brace Reaction.
3. At Max. 60 Degree Brace Inclination.
4. Min. 3,000 psi NWC. Any "N Series" Connection May Be Utilized Having A Numeric Designation Equal To Or Higher Than That Shown.
5. Min. 3,000 psi NWC or LWC. Any "L Series" Connection May Be Utilized Having A Numeric Designation Equal To Or Higher Than That Shown.
6. As An Alternate, Brace Anchorage Connections To Structure May Be Employed Using Any Detail From Structural Connections Section "D" Series Details Where Assembly Design Value Meets Or Exceeds Brace Reaction.
7. For Trade Specific Bracing Installation Notes, Refer To Page 10.1
8. Utilize Any "G" Series Vertical Support Connection Having A Design Value Equal To Or Greater Than The Corresponding "Rod Total Vertical Load".
9. Based on Water Filled + Insulated Pipe Weight. Refer to X-Series Weight Charts.
10. Based on Empty Pipe Weight. Refer to X-Series Weight Charts.

REGISTERED PROFESSIONAL ENGINEER MARCIN WASAZNIK S 6612 STRUCTURAL STATE OF CALIFORNIA

ISAT
A Division of Tomarco Contractor Specialties
International Seismic Application Technology
14848 Northam Street, La Mirada, CA 90638
877-999-4728 (Toll Free) 714-523-0845 (Fax)
www.isatsb.com

01/26/2024 OPM-0403: Reviewed for Code Compliance by William Staehlin Page 318 of 1157

CABLE BRACING REQUIREMENTS [7]:

SINGLE HUNG PIPE, TYPE K AND TYPE L COPPER TUBING (WATER FILLED + INSULATED) [9] — **MAXIMUM SEISMIC DESIGN FORCE = 0.25 G's**

Requires Use of ISAT Seismic Brackets. Use of Any Non-ISAT Bracket Voids Engineering. — *2013 California Building Code Compliant*

Maximum Pipe Diameter (in.)	Max. Vertical Support Spacing (ft.)	Rod [1] Total Vertical Load (lbs)	Min. [8] Vertical Support Rod Dia. (in.)	TRANSVERSE BRACING REQUIREMENTS: Max. [2] Brace Spacing (ft.)	Brace [3] Reaction P (lbs)	Min. Brace Assembly E - Pages	Min. Brace Anchorage [6]: Form Pour [4] Deck Page D1	Metal [5] Deck Page D2	LONGITUDINAL BRACING REQUIREMENTS: Max. [2] Brace Spacing (ft.)	Brace [3] Reaction P (lbs)	Min. Brace Assembly E - Pages	Min. Brace Anchorage [6]: Form Pour [4] Deck Page D1	Metal [5] Deck Page D2
				2-Way Transverse Brace Pattern (B6.4, B6.5)					**4-Way T/L Details (B7.0, B7.1, B7.2, B8.4)**				
1 1/2	8	30	3/8	25	20	C38AA04WS	N1	L1	76	60	C38AA04WS	N1	L1
2	10	57	3/8	28	34	C38AA04WS	N1	L1	83	101	C38AA04WS	N2	L2
2 1/2	10	79	1/2	32	55	C12AA04WS	N1	L1	97	165	C12AA04WS	N2	L2
3	10	108	1/2	37	85	C12AA04WS	N1	L1	110	254	C12AA04WS	N3	L3
4	10	199	5/8	39	166	C58AA04WS	N2	L2	117	497	C58AA04WS	N5	L5
6	10	395	5/8	39	329	C58AA04WS	N4	L4	38	325	C58AA04WS	N4	L4
				TRANSVERSE, LONGITUDINAL BRACING REQUIREMENTS (SELECT EITHER T/L OR SPLAY)									
				4-Way T/L Details (B7.0, B7.1, B7.2, B8.4)					**4-Way Splay Details (B9.0, B9.1, B9.1.1)**				
1 1/2	8	30	3/8	25	20	C38AA04WS	N1	L1	25	20	C38AA04WS	N1	L1
2	10	57	3/8	28	34	C38AA04WS	N1	L1	28	34	C38AA04WS	N1	L1
2 1/2	10	79	1/2	32	55	C12AA04WS	N1	L1	32	55	C12AA04WS	N1	L1
3	10	108	1/2	37	85	C12AA04WS	N1	L1	37	85	C12AA04WS	N1	L1
4	10	199	5/8	40	169	C58AA04WS	N2	L2	40	169	C58AA04WS	N2	L2
6	10	395	5/8	38	325	C58AA04WS	N4	L4	38	325	C58AA04WS	N4	L4

SINGLE HUNG PIPE, TYPE K AND TYPE L COPPER TUBING (GAS FILLED) [10] — **MAXIMUM SEISMIC DESIGN FORCE = 0.25 G's**

				2-Way Transverse Brace Pattern (B6.4, B6.5)					**4-Way T/L Details (B7.0, B7.1, B7.2, B8.4)**				
1 1/2	10	18	3/8	35	14	C38AA04WS	N1	L1	104	41	C38AA04WS	N1	L1
2	10	28	3/8	40	24	C38AA04WS	N1	L1	119	71	C38AA04WS	N1	L1
2 1/2	10	39	1/2	44	37	C12AA04WS	N1	L1	132	112	C12AA04WS	N2	L2
3	10	54	1/2	48	56	C12AA04WS	N1	L1	145	167	C12AA04WS	N2	L2
4	10	88	5/8	55	104	C58AA04WS	N2	L2	166	312	C58AA04WS	N4	L4
6	10	187	5/8	68	271	C58AA04WS	N3	L3	81	325	C58AA04WS	N4	L4
				TRANSVERSE, LONGITUDINAL BRACING REQUIREMENTS (SELECT EITHER T/L OR SPLAY)									
				4-Way T/L Details (B7.0, B7.1, B7.2, B8.4)					**4-Way Splay Details (B9.0, B9.1, B9.1.1)**				
1 1/2	10	18	3/8	35	14	C38AA04WS	N1	L1	35	14	C38AA04WS	N1	L1
2	10	28	3/8	40	24	C38AA04WS	N1	L1	40	32	C38AA04WS	N1	L1
2 1/2	10	39	1/2	44	37	C12AA04WS	N1	L1	44	50	C12AA04WS	N1	L1
3	10	54	1/2	48	56	C12AA04WS	N1	L1	48	75	C12AA04WS	N1	L1
4	10	88	5/8	55	104	C58AA04WS	N2	L2	55	140	C58AA04WS	N2	L2
6	10	187	5/8	68	271	C58AA04WS	N3	L3	68	364	C58AA04WS	N4	L4

1. TVL = DL + Fv + ($0.2S_{DS}$/1.4 x Wp). All Terms Are Working Loads.
2. Reductions In Actual Installed Brace Spacing Will Result In An Equal Percentage Reduction In Brace Reaction. As An Option When This Occurs ISAT May Substitute An Alternate Anchorage From Tables D1 or D2 Which Meets or Exceeds The Lowered Brace Reaction.
3. At Max. 30 Degree Brace Inclination.
4. Min. 3,000 psi NWC. Any "N Series" Connection May Be Utilized Having A Numeric Designation Equal To Or Higher Than That Shown.
5. Min. 3,000 psi NWC or LWC. Any "L Series" Connection May Be Utilized Having A Numeric Designation Equal To Or Higher Than That Shown.
6. As An Alternate, Brace Anchorage Connections To Structure May Be Employed Using Any Detail From Structural Connections Section "D" Series Details Where Assembly Design Value Meets Or Exceeds Brace Reaction.
7. For Trade Specific Bracing Installation Notes, Refer To Page 10.1
8. Utilize Any "G" Series Vertical Support Connection Having A Design Value Equal To Or Greater Than The Corresponding "Rod Total Vertical Load".
9. Based on Water Filled + Insulated Pipe Weight. Refer to X-Series Weight Charts.
10. Based on Empty Pipe Weight. Refer to X-Series Weight Charts.

REGISTERED PROFESSIONAL ENGINEER — WARCIN WASAZNIK — S 6612 — STRUCTURAL — STATE OF CALIFORNIA

ISAT — A Division of Tomarco Contractor Specialties

International Seismic Application Technology
14848 Northam Street, La Mirada, CA 90638
877-999-4728 (Toll Free) 714-523-0845 (Fax)
www.isatsb.com

Rev. 2
03/12/19

Page
C10-0.25-30

REVIEWED FOR CODE COMPLIANCE — OPM-0403 — BY: William Staehlin — DATE: 01-26-2024 — CALIFORNIA BUILDING CODE

CABLE BRACING REQUIREMENTS [7]:

SINGLE HUNG PIPE, TYPE K AND TYPE L COPPER TUBING (WATER FILLED + INSULATED) [9] — **MAXIMUM SEISMIC DESIGN FORCE = 0.25 G's**

Requires Use of ISAT Seismic Brackets. Use of Any Non-ISAT Bracket Voids Engineering. — *2013 California Building Code Compliant*

Maximum Pipe Diameter (in.)	Max. Vertical Support Spacing (ft.)	Rod [1] Total Vertical Load (lbs)	Min. [8] Vertical Support Rod Dia. (in.)	TRANSVERSE BRACING REQUIREMENTS: Max. [2] Brace Spacing (ft.)	Brace [3] Reaction P (lbs)	Min. Brace Assembly E - Pages	Min. Brace Anchorage [6]: Form Pour [4] Deck Page D1	Metal [5] Deck Page D2	LONGITUDINAL BRACING REQUIREMENTS: Max. [2] Brace Spacing (ft.)	Brace [3] Reaction P (lbs)	Min. Brace Assembly E - Pages	Min. Brace Anchorage [6]: Form Pour [4] Deck Page D1	Metal [5] Deck Page D2
				2-Way Transverse Brace Pattern (B6.4, B6.5)					**4-Way T/L Details (B7.0, B7.1, B7.2, B8.4)**				
1 1/2	8	30	3/8	25	27	C38AA04WS	N1	L1	76	81	C38AA04WS	N1	L1
2	10	57	3/8	28	45	C38AA04WS	N1	L1	83	136	C38AA04WS	N2	L2
2 1/2	10	79	1/2	32	74	C12AA04WS	N1	L1	97	223	C12AA04WS	N3	L3
3	10	108	1/2	37	114	C12AA04WS	N2	L2	110	343	C12AA04WS	N4	L4
4	10	199	5/8	40	227	C58AA04WS	N3	L3	119	682	C58AA06WS	N7	L7
6	10	395	5/8	50	570	C58AA04WS	N6	L6	38	435	C58AA04WS	N5	L5
				TRANSVERSE, LONGITUDINAL BRACING REQUIREMENTS (SELECT EITHER T/L OR SPLAY)									
				4-Way T/L Details (B7.0, B7.1, B7.2, B8.4)					**4-Way Splay Details (B9.0, B9.1, B9.1.1)**				
1 1/2	8	30	3/8	25	27	C38AA04WS	N1	L1	25	27	C38AA04WS	N1	L1
2	10	57	3/8	28	45	C38AA04WS	N1	L1	28	45	C38AA04WS	N1	L1
2 1/2	10	79	1/2	32	74	C12AA04WS	N1	L1	32	74	C12AA04WS	N1	L1
3	10	108	1/2	37	114	C12AA04WS	N2	L2	37	114	C12AA04WS	N2	L2
4	10	199	5/8	40	227	C58AA04WS	N3	L3	40	227	C58AA04WS	N3	L3
6	10	395	5/8	38	435	C58AA04WS	N5	L5	38	435	C58AA04WS	N5	L5

SINGLE HUNG PIPE, TYPE K AND TYPE L COPPER TUBING (GAS FILLED) [10] — **MAXIMUM SEISMIC DESIGN FORCE = 0.25 G's**

				2-Way Transverse Brace Pattern (B6.4, B6.5)					**4-Way T/L Details (B7.0, B7.1, B7.2, B8.4)**				
1 1/2	10	18	3/8	35	18	C38AA04WS	N1	L1	104	55	C38AA04WS	N1	L1
2	10	28	3/8	40	32	C38AA04WS	N1	L1	119	95	C38AA04WS	N1	L1
2 1/2	10	39	1/2	44	50	C12AA04WS	N1	L1	132	150	C12AA04WS	N2	L2
3	10	54	1/2	48	75	C12AA04WS	N1	L1	145	225	C12AA04WS	N3	L3
4	10	88	5/8	55	140	C58AA04WS	N2	L2	166	421	C58AA04WS	N5	L5
6	10	187	5/8	68	365	C58AA04WS	N4	L4	81	435	C58AA04WS	N5	L5
				TRANSVERSE, LONGITUDINAL BRACING REQUIREMENTS (SELECT EITHER T/L OR SPLAY)									
				4-Way T/L Details (B7.0, B7.1, B7.2, B8.4)					**4-Way Splay Details (B9.0, B9.1, B9.1.1)**				
1 1/2	10	18	3/8	35	18	C38AA04WS	N1	L1	35	18	C38AA04WS	N1	L1
2	10	28	3/8	40	32	C38AA04WS	N1	L1	40	32	C38AA04WS	N1	L1
2 1/2	10	39	1/2	44	50	C12AA04WS	N1	L1	44	50	C12AA04WS	N1	L1
3	10	54	1/2	48	75	C12AA04WS	N1	L1	48	75	C12AA04WS	N1	L1
4	10	88	5/8	55	140	C58AA04WS	N2	L2	55	140	C58AA04WS	N2	L2
6	10	187	5/8	68	365	C58AA04WS	N4	L4	68	365	C58AA04WS	N4	L4

1. TVL = DL + Fv + ($0.2S_{DS}$/1.4 x Wp). All Terms Are Working Loads.
2. Reductions In Actual Installed Brace Spacing Will Result In An Equal Percentage Reduction In Brace Reaction. As An Option When This Occurs ISAT May Substitute An Alternate Anchorage From Tables D1 or D2 Which Meets or Exceeds The Lowered Brace Reaction.
3. At Max. 50 Degree Brace Inclination.
4. Min. 3,000 psi NWC. Any "N Series" Connection May Be Utilized Having A Numeric Designation Equal To Or Higher Than That Shown.
5. Min. 3,000 psi NWC or LWC. Any "L Series" Connection May Be Utilized Having A Numeric Designation Equal To Or Higher Than That Shown.
6. As An Alternate, Brace Anchorage Connections To Structure May Be Employed Using Any Detail From Structural Connections Section "D" Series Details Where Assembly Design Value Meets Or Exceeds Brace Reaction.
7. For Trade Specific Bracing Installation Notes, Refer To Page 10.1
8. Utilize Any "G" Series Vertical Support Connection Having A Design Value Equal To Or Greater Than The Corresponding "Rod Total Vertical Load".
9. Based on Water Filled + Insulated Pipe Weight. Refer to X-Series Weight Charts.
10. Based on Empty Pipe Weight. Refer to X-Series Weight Charts.

REGISTERED PROFESSIONAL ENGINEER — MARCIN WASAZNIK — S 6612 — STRUCTURAL — STATE OF CALIFORNIA

ISAT — A Division of Tomarco Contractor Specialties

International Seismic Application Technology
14848 Northam Street, La Mirada, CA 90638
877-999-4728 (Toll Free) 714-523-0845 (Fax)
www.isatsb.com

Rev. 2
03/12/19
Page
C10-0.25-45

REVIEWED FOR CODE COMPLIANCE BY: William Staehlin DATE: 01-26-2024 OPM-0403 CALIFORNIA BUILDING CODE

CABLE BRACING REQUIREMENTS [7]:

SINGLE HUNG PIPE, TYPE K AND TYPE L COPPER TUBING (WATER FILLED + INSULATED) [9] — **MAXIMUM SEISMIC DESIGN FORCE = 0.25 G's**

Requires Use of ISAT Seismic Brackets. Use of Any Non-ISAT Bracket Voids Engineering. — *2013 California Building Code Compliant*

Maximum Pipe Diameter (in.)	Max. Vertical Support Spacing (ft.)	Rod [1] Total Vertical Load (lbs)	Min. [8] Vertical Support Rod Dia. (in.)	TRANSVERSE BRACING REQUIREMENTS: Max. [2] Brace Spacing (ft.)	Brace [3] Reaction P (lbs)	Min. Brace Assembly E - Pages	Min. Brace Anchorage [6]: Form Pour [4] Deck Page D1	Metal [5] Deck Page D2	LONGITUDINAL BRACING REQUIREMENTS: Max. [2] Brace Spacing (ft.)	Brace [3] Reaction P (lbs)	Min. Brace Assembly E - Pages	Min. Brace Anchorage [6]: Form Pour [4] Deck Page D1	Metal [5] Deck Page D2
				2-Way Transverse Brace Pattern (B6.4, B6.5)					**4-Way T/L Details (B7.0, B7.1, B7.2, B8.4)**				
1 1/2	8	30	3/8	25	35	C38AA04WS	N1	L1	76	104	C38AA04WS	N2	L2
2	10	57	3/8	28	58	C38AA04WS	N1	L1	83	175	C38AA04WS	N2	L2
2 1/2	10	79	1/2	32	96	C12AA04WS	N1	L1	97	287	C12AA04WS	N3	L3
3	10	108	1/2	37	147	C12AA04WS	N2	L2	110	440	C12AA04WS	N5	L5
4	10	199	5/8	40	292	C58AA04WS	N3	L3	119	877	C58AA06WS	N9	L9
6	10	395	5/8	45	665	C58AA04WS	N7	L7	34	495	C58AA04WS	N5	L5
				TRANSVERSE, LONGITUDINAL BRACING REQUIREMENTS (SELECT EITHER T/L OR SPLAY)									
				4-Way T/L Details (B7.0, B7.1, B7.2, B8.4)					**4-Way Splay Details (B9.0, B9.1, B9.1.1)**				
1 1/2	8	30	3/8	25	35	C38AA04WS	N1	L1	25	35	C38AA04WS	N1	L1
2	10	57	3/8	28	58	C38AA04WS	N1	L1	28	58	C38AA04WS	N1	L1
2 1/2	10	79	1/2	32	96	C12AA04WS	N1	L1	32	96	C12AA04WS	N1	L1
3	10	108	1/2	37	147	C12AA04WS	N2	L2	37	147	C12AA04WS	N2	L2
4	10	199	5/8	40	292	C58AA04WS	N3	L3	40	292	C58AA04WS	N3	L3
6	10	395	5/8	34	495	C58AA04WS	N5	L5	34	495	C58AA04WS	N5	L5

SINGLE HUNG PIPE, TYPE K AND TYPE L COPPER TUBING (GAS FILLED) [10] — **MAXIMUM SEISMIC DESIGN FORCE = 0.25 G's**

				2-Way Transverse Brace Pattern (B6.4, B6.5)					**4-Way T/L Details (B7.0, B7.1, B7.2, B8.4)**				
1 1/2	10	18	3/8	35	24	C38AA04WS	N1	L1	104	71	C38AA04WS	N1	L1
2	10	28	3/8	40	41	C38AA04WS	N1	L1	119	123	C38AA04WS	N2	L2
2 1/2	10	39	1/2	44	64	C12AA04WS	N1	L1	132	193	C12AA04WS	N2	L2
3	10	54	1/2	48	97	C12AA04WS	N1	L1	145	290	C12AA04WS	N3	L3
4	10	88	5/8	55	180	C58AA04WS	N2	L2	166	541	C58AA04WS	N6	L6
6	10	187	5/8	68	469	C58AA04WS	N5	L5	71	495	C58AA04WS	N5	L5
				TRANSVERSE, LONGITUDINAL BRACING REQUIREMENTS (SELECT EITHER T/L OR SPLAY)									
				4-Way T/L Details (B7.0, B7.1, B7.2, B8.4)					**4-Way Splay Details (B9.0, B9.1, B9.1.1)**				
1 1/2	10	18	3/8	35	24	C38AA04WS	N1	L1	35	24	C38AA04WS	N1	L1
2	10	28	3/8	40	41	C38AA04WS	N1	L1	40	41	C38AA04WS	N1	L1
2 1/2	10	39	1/2	44	64	C12AA04WS	N1	L1	44	64	C12AA04WS	N1	L1
3	10	54	1/2	48	97	C12AA04WS	N1	L1	48	97	C12AA04WS	N1	L1
4	10	88	5/8	55	180	C58AA04WS	N2	L2	55	180	C58AA04WS	N2	L2
6	10	187	5/8	68	469	C58AA04WS	N5	L5	68	469	C58AA04WS	N5	L5

1. TVL = DL + Fv + ($0.2S_{DS}$/1.4 x Wp). All Terms Are Working Loads.
2. Reductions In Actual Installed Brace Spacing Will Result In An Equal Percentage Reduction In Brace Reaction. As An Option When This Occurs ISAT May Substitute An Alternate Anchorage From Tables D1 or D2 Which Meets or Exceeds The Lowered Brace Reaction.
3. At Max. 60 Degree Brace Inclination.
4. Min. 3,000 psi NWC. Any "N Series" Connection May Be Utilized Having A Numeric Designation Equal To Or Higher Than That Shown.
5. Min. 3,000 psi NWC or LWC. Any "L Series" Connection May Be Utilized Having A Numeric Designation Equal To Or Higher Than That Shown.
6. As An Alternate, Brace Anchorage Connections To Structure May Be Employed Using Any Detail From Structural Connections Section "D" Series Details Where Assembly Design Value Meets Or Exceeds Brace Reaction.
7. For Trade Specific Bracing Installation Notes, Refer To Page 10.1
8. Utilize Any "G" Series Vertical Support Connection Having A Design Value Equal To Or Greater Than The Corresponding "Rod Total Vertical Load".
9. Based on Water Filled + Insulated Pipe Weight. Refer to X-Series Weight Charts.
10. Based on Empty Pipe Weight. Refer to X-Series Weight Charts.

REGISTERED PROFESSIONAL ENGINEER — MARCIN WASAZNIK — S 6612 — STRUCTURAL — STATE OF CALIFORNIA

ISAT — A Division of Tomarco Contractor Specialties

International Seismic Application Technology
14848 Northam Street, La Mirada, CA 90638
877-999-4728 (Toll Free) 714-523-0845 (Fax)
www.isatsb.com

Rev. 2
03/12/19
Page
C10-0.25-60

REVIEWED FOR CODE COMPLIANCE BY: William Staehlin DATE: 01-26-2024 OPM-0403 CALIFORNIA BUILDING CODE

CABLE BRACING REQUIREMENTS [7]:

SINGLE HUNG PIPE, TYPE K AND TYPE L COPPER TUBING (WATER FILLED + INSULATED) [9] — **MAXIMUM SEISMIC DESIGN FORCE = 0.50 G's**

Requires Use of ISAT Seismic Brackets. Use of Any Non-ISAT Bracket Voids Engineering. — *2013 California Building Code Compliant*

Maximum Pipe Diameter (in.)	Max. Vertical Support Spacing (ft.)	Rod [1] Total Vertical Load (lbs)	Min. [8] Vertical Support Rod Dia. (in.)	TRANSVERSE BRACING REQUIREMENTS: Max. [2] Brace Spacing (ft.)	Brace [3] Reaction P (lbs)	Min. Brace Assembly E - Pages	Min. Brace Anchorage [6]: Form Pour [4] Deck Page D1	Metal [5] Deck Page D2	LONGITUDINAL BRACING REQUIREMENTS: Max. [2] Brace Spacing (ft.)	Brace [3] Reaction P (lbs)	Min. Brace Assembly E - Pages	Min. Brace Anchorage [6]: Form Pour [4] Deck Page D1	Metal [5] Deck Page D2
				2-Way Transverse Brace Pattern (B6.4, B6.5)					**4-Way T/L Details (B7.0, B7.1, B7.2, B8.4)**				
1 1/2	8	30	3/8	18	28	C38AA04WS	N1	L1	53	85	C38AA04WS	N1	L1
2	10	57	3/8	20	48	C38AA04WS	N1	L1	59	143	C38AA04WS	N2	L2
2 1/2	10	79	1/2	23	78	C12AA04WS	N1	L1	69	234	C12AA04WS	N3	L3
3	10	108	1/2	26	120	C12AA04WS	N2	L2	78	360	C12AA04WS	N4	L4
4	10	199	5/8	28	239	C58AA04WS	N3	L3	68	580	C58AA04WS	N6	L6
6	10	395	5/8	26	435	C58AA04WS	N5	L5	19	325	C58AA04WS	N4	L4
				TRANSVERSE, LONGITUDINAL BRACING REQUIREMENTS (SELECT EITHER T/L OR SPLAY)									
				4-Way T/L Details (B7.0, B7.1, B7.2, B8.4)					**4-Way Splay Details (B9.0, B9.1, B9.1.1)**				
1 1/2	8	30	3/8	18	28	C38AA04WS	N1	L1	18	28	C38AA04WS	N1	L1
2	10	57	3/8	20	48	C38AA04WS	N1	L1	20	48	C38AA04WS	N1	L1
2 1/2	10	79	1/2	23	78	C12AA04WS	N1	L1	23	78	C12AA04WS	N1	L1
3	10	108	1/2	26	120	C12AA04WS	N2	L2	26	120	C12AA04WS	N2	L2
4	10	199	5/8	28	239	C58AA04WS	N3	L3	28	239	C58AA04WS	N3	L3
6	10	395	5/8	19	325	C58AA04WS	N4	L4	19	325	C58AA04WS	N4	L4

SINGLE HUNG PIPE, TYPE K AND TYPE L COPPER TUBING (GAS FILLED) [10] — **MAXIMUM SEISMIC DESIGN FORCE = 0.50 G's**

				2-Way Transverse Brace Pattern (B6.4, B6.5)					**4-Way T/L Details (B7.0, B7.1, B7.2, B8.4)**				
1 1/2	10	18	3/8	28	22	C38AA04WS	N1	L1	85	67	C38AA04WS	N1	L1
2	10	28	3/8	33	39	C38AA04WS	N1	L1	100	118	C38AA04WS	N2	L2
2 1/2	10	39	1/2	37	63	C12AA04WS	N1	L1	111	188	C12AA04WS	N2	L2
3	10	54	1/2	41	94	C12AA04WS	N1	L1	122	281	C12AA04WS	N3	L3
4	10	88	5/8	47	175	C58AA04WS	N2	L2	140	525	C58AA04WS	N6	L6
6	10	187	5/8	54	435	C58AA04WS	N5	L5	41	325	C58AA04WS	N4	L4
				TRANSVERSE, LONGITUDINAL BRACING REQUIREMENTS (SELECT EITHER T/L OR SPLAY)									
				4-Way T/L Details (B7.0, B7.1, B7.2, B8.4)					**4-Way Splay Details (B9.0, B9.1, B9.1.1)**				
1 1/2	10	18	3/8	28	22	C38AA04WS	N1	L1	28	22	C38AA04WS	N1	L1
2	10	28	3/8	33	39	C38AA04WS	N1	L1	33	39	C38AA04WS	N1	L1
2 1/2	10	39	1/2	37	63	C12AA04WS	N1	L1	37	63	C12AA04WS	N1	L1
3	10	54	1/2	41	94	C12AA04WS	N1	L1	41	94	C12AA04WS	N1	L1
4	10	88	5/8	47	175	C58AA04WS	N2	L2	47	175	C58AA04WS	N2	L2
6	10	187	5/8	41	325	C58AA04WS	N4	L4	41	325	C58AA04WS	N4	L4

1. TVL = DL + Fv + ($0.2S_{DS}$/1.4 x Wp). All Terms Are Working Loads.
2. Reductions In Actual Installed Brace Spacing Will Result In An Equal Percentage Reduction In Brace Reaction. As An Option When This Occurs ISAT May Substitute An Alternate Anchorage From Tables D1 or D2 Which Meets or Exceeds The Lowered Brace Reaction.
3. At Max. 30 Degree Brace Inclination.
4. Min. 3,000 psi NWC. Any "N Series" Connection May Be Utilized Having A Numeric Designation Equal To Or Higher Than That Shown.
5. Min. 3,000 psi NWC or LWC. Any "L Series" Connection May Be Utilized Having A Numeric Designation Equal To Or Higher Than That Shown.
6. As An Alternate, Brace Anchorage Connections To Structure May Be Employed Using Any Detail From Structural Connections Section "D" Series Details Where Assembly Design Value Meets Or Exceeds Brace Reaction.
7. For Trade Specific Bracing Installation Notes, Refer To Page 10.1
8. Utilize Any "G" Series Vertical Support Connection Having A Design Value Equal To Or Greater Than The Corresponding "Rod Total Vertical Load".
9. Based on Water Filled + Insulated Pipe Weight. Refer to X-Series Weight Charts.
10. Based on Empty Pipe Weight. Refer to X-Series Weight Charts.

REGISTERED PROFESSIONAL ENGINEER — MINC/N VASAZNIK — S 6612 — STRUCTURAL — STATE OF CALIFORNIA

ISAT — A Division of Tomarco Contractor Specialties

International Seismic Application Technology
14848 Northam Street, La Mirada, CA 90638
877-999-4728 (Toll Free) 714-523-0845 (Fax)
www.isatsb.com

Rev. 2
03/12/19
Page
C10-0.5-30

REVIEWED FOR CODE COMPLIANCE — OPM-0403 — BY: William Staehlin — DATE: 01-26-2024 — CALIFORNIA BUILDING CODE 2022

CABLE BRACING REQUIREMENTS [7]:

SINGLE HUNG PIPE, TYPE K AND TYPE L COPPER TUBING (WATER FILLED + INSULATED) [9] — **MAXIMUM SEISMIC DESIGN FORCE = 0.50 G's**

Requires Use of ISAT Seismic Brackets. Use of Any Non-ISAT Bracket Voids Engineering. — *2013 California Building Code Compliant*

Maximum Pipe Diameter (in.)	Max. Vertical Support Spacing (ft.)	Rod [1] Total Vertical Load (lbs)	Min. [8] Vertical Support Rod Dia. (in.)	TRANSVERSE BRACING REQUIREMENTS					LONGITUDINAL BRACING REQUIREMENTS				
				Max. [2] Brace Spacing (ft.)	Brace [3] Reaction P (lbs)	Min. Brace Assembly E - Pages	Min. Brace Anchorage [6] Form Pour [4] Deck Page D1	Min. Brace Anchorage [6] Metal [5] Deck Page D2	Max. [2] Brace Spacing (ft.)	Brace [3] Reaction P (lbs)	Min. Brace Assembly E - Pages	Min. Brace Anchorage [6] Form Pour [4] Deck Page D1	Min. Brace Anchorage [6] Metal [5] Deck Page D2
				2-Way Transverse Brace Pattern (B6.4, B6.5)					4-Way T/L Details (B7.0, B7.1, B7.2, B8.4)				
1 1/2	8	30	3/8	18	38	C38AA04WS	N1	L1	53	115	C38AA04WS	N2	L2
2	10	57	3/8	20	64	C38AA04WS	N1	L1	59	193	C38AA04WS	N2	L2
2 1/2	10	79	1/2	23	105	C12AA04WS	N2	L2	69	315	C12AA04WS	N4	L4
3	10	108	1/2	26	161	C12AA04WS	N2	L2	78	484	C12AA04WS	N5	L5
4	10	199	5/8	28	322	C58AA04WS	N4	L4	68	780	C58AA06WS	N8	L8
6	10	395	5/8	26	585	C58AA04WS	N6	L6	19	435	C58AA04WS	N5	L5
				TRANSVERSE, LONGITUDINAL BRACING REQUIREMENTS (SELECT EITHER T/L OR SPLAY)									
				4-Way T/L Details (B7.0, B7.1, B7.2, B8.4)					4-Way Splay Details (B9.0, B9.1, B9.1.1)				
1 1/2	8	30	3/8	18	38	C38AA04WS	N1	L1	18	38	C38AA04WS	N1	L1
2	10	57	3/8	20	64	C38AA04WS	N1	L1	20	64	C38AA04WS	N1	L1
2 1/2	10	79	1/2	23	105	C12AA04WS	N2	L2	23	105	C12AA04WS	N2	L2
3	10	108	1/2	26	161	C12AA04WS	N2	L2	26	161	C12AA04WS	N2	L2
4	10	199	5/8	28	322	C58AA04WS	N4	L4	28	322	C58AA04WS	N4	L4
6	10	395	5/8	19	435	C58AA04WS	N5	L5	19	435	C58AA04WS	N5	L5

SINGLE HUNG PIPE, TYPE K AND TYPE L COPPER TUBING (GAS FILLED) [10] — **MAXIMUM SEISMIC DESIGN FORCE = 0.50 G's**

				2-Way Transverse Brace Pattern (B6.4, B6.5)					4-Way T/L Details (B7.0, B7.1, B7.2, B8.4)				
1 1/2	10	18	3/8	28	30	C38AA04WS	N1	L1	85	90	C38AA04WS	N1	L1
2	10	28	3/8	33	53	C38AA04WS	N1	L1	100	160	C38AA04WS	N2	L2
2 1/2	10	39	1/2	37	84	C12AA04WS	N1	L1	111	253	C12AA04WS	N3	L3
3	10	54	1/2	41	126	C12AA04WS	N2	L2	122	379	C12AA04WS	N4	L4
4	10	88	5/8	47	236	C58AA04WS	N3	L3	140	708	C58AA06WS	N8	L8
6	10	187	5/8	54	585	C58AA04WS	N6	L6	40	435	C58AA04WS	N5	L5
				TRANSVERSE, LONGITUDINAL BRACING REQUIREMENTS (SELECT EITHER T/L OR SPLAY)									
				4-Way T/L Details (B7.0, B7.1, B7.2, B8.4)					4-Way Splay Details (B9.0, B9.1, B9.1.1)				
1 1/2	10	18	3/8	28	30	C38AA04WS	N1	L1	28	30	C38AA04WS	N1	L1
2	10	28	3/8	33	53	C38AA04WS	N1	L1	33	53	C38AA04WS	N1	L1
2 1/2	10	39	1/2	37	84	C12AA04WS	N1	L1	37	84	C12AA04WS	N1	L1
3	10	54	1/2	41	126	C12AA04WS	N2	L2	41	126	C12AA04WS	N2	L2
4	10	88	5/8	47	236	C58AA04WS	N3	L3	47	236	C58AA04WS	N3	L3
6	10	187	5/8	40	435	C58AA04WS	N5	L5	40	435	C58AA04WS	N5	L5

1. TVL = DL + Fv + ($0.2S_{DS}$/1.4 x Wp). All Terms Are Working Loads.
2. Reductions In Actual Installed Brace Spacing Will Result In An Equal Percentage Reduction In Brace Reaction. As An Option When This Occurs ISAT May Substitute An Alternate Anchorage From Tables D1 or D2 Which Meets or Exceeds The Lowered Brace Reaction.
3. At Max. 50 Degree Brace Inclination.
4. Min. 3,000 psi NWC. Any "N Series" Connection May Be Utilized Having A Numeric Designation Equal To Or Higher Than That Shown.
5. Min. 3,000 psi NWC or LWC. Any "L Series" Connection May Be Utilized Having A Numeric Designation Equal To Or Higher Than That Shown.
6. As An Alternate, Brace Anchorage Connections To Structure May Be Employed Using Any Detail From Structural Connections Section "D" Series Details Where Assembly Design Value Meets Or Exceeds Brace Reaction.
7. For Trade Specific Bracing Installation Notes, Refer To Page 10.1
8. Utilize Any "G" Series Vertical Support Connection Having A Design Value Equal To Or Greater Than The Corresponding "Rod Total Vertical Load".
9. Based on Water Filled + Insulated Pipe Weight. Refer to X-Series Weight Charts.
10. Based on Empty Pipe Weight. Refer to X-Series Weight Charts.

REGISTERED PROFESSIONAL ENGINEER — MINC/N VASAZNIK — S 6612 — STRUCTURAL — STATE OF CALIFORNIA

ISAT — A Division of Tomarco Contractor Specialties

International Seismic Application Technology
14848 Northam Street, La Mirada, CA 90638
877-999-4728 (Toll Free) 714-523-0845 (Fax)
www.isatsb.com

Rev. 2
03/12/19
Page
C10-0.5-45

REVIEWED FOR CODE COMPLIANCE BY: William Staehlin DATE: 01-26-2024 CALIFORNIA BUILDING CODE

CABLE BRACING REQUIREMENTS [7]:

SINGLE HUNG PIPE, TYPE K AND TYPE L COPPER TUBING (WATER FILLED + INSULATED) [9] — **MAXIMUM SEISMIC DESIGN FORCE = 0.50 G's**

Requires Use of ISAT Seismic Brackets. Use of Any Non-ISAT Bracket Voids Engineering. — *2013 California Building Code Compliant*

Maximum Pipe Diameter (in.)	Max. Vertical Support Spacing (ft.)	Rod [1] Total Vertical Load (lbs)	Min. [8] Vertical Support Rod Dia. (in.)	TRANSVERSE BRACING REQUIREMENTS: Max. [2] Brace Spacing (ft.)	Brace [3] Reaction P (lbs)	Min. Brace Assembly E - Pages	Min. Brace Anchorage [6]: Form Pour [4] Deck Page D1	Metal [5] Deck Page D2	LONGITUDINAL BRACING REQUIREMENTS: Max. [2] Brace Spacing (ft.)	Brace [3] Reaction P (lbs)	Min. Brace Assembly E - Pages	Min. Brace Anchorage [6]: Form Pour [4] Deck Page D1	Metal [5] Deck Page D2
				2-Way Transverse Brace Pattern (B6.4, B6.5)					**4-Way T/L Details (B7.0, B7.1, B7.2, B8.4)**				
1 1/2	8	30	3/8	18	49	C38AA04WS	N1	L1	53	148	C38AA04WS	N2	L2
2	10	57	3/8	20	83	C38AA04WS	N1	L1	59	248	C38AA04WS	N3	L3
2 1/2	10	79	1/2	23	135	C12AA04WS	N2	L2	69	405	C12AA04WS	N5	L5
3	10	108	1/2	26	208	C12AA04WS	N3	L3	71	570	C12AA04WS	N6	L6
4	10	199	5/8	27	395	C58AA04WS	N4	L4	60	885	C58AA06WS	N9	L9
6	10	395	5/8	23	665	C58AA04WS	N7	L7	17	495	C58AA04WS	N5	L5
				TRANSVERSE, LONGITUDINAL BRACING REQUIREMENTS (SELECT EITHER T/L OR SPLAY)									
				4-Way T/L Details (B7.0, B7.1, B7.2, B8.4)					**4-Way Splay Details (B9.0, B9.1, B9.1.1)**				
1 1/2	8	30	3/8	18	49	C38AA04WS	N1	L1	18	49	C38AA04WS	N1	L1
2	10	57	3/8	20	83	C38AA04WS	N1	L1	20	83	C38AA04WS	N1	L1
2 1/2	10	79	1/2	23	135	C12AA04WS	N2	L2	23	135	C12AA04WS	N2	L2
3	10	108	1/2	26	208	C12AA04WS	N3	L3	26	208	C12AA04WS	N3	L3
4	10	199	5/8	27	395	C58AA04WS	N4	L4	27	395	C58AA04WS	N4	L4
6	10	395	5/8	17	495	C58AA04WS	N5	L5	17	495	C58AA04WS	N5	L5

SINGLE HUNG PIPE, TYPE K AND TYPE L COPPER TUBING (GAS FILLED) [10] — **MAXIMUM SEISMIC DESIGN FORCE = 0.50 G's**

				2-Way Transverse Brace Pattern (B6.4, B6.5)					**4-Way T/L Details (B7.0, B7.1, B7.2, B8.4)**				
1 1/2	10	18	3/8	28	38	C38AA04WS	N1	L1	85	115	C38AA04WS	N2	L2
2	10	28	3/8	33	68	C38AA04WS	N1	L1	100	205	C38AA04WS	N3	L3
2 1/2	10	39	1/2	37	108	C12AA04WS	N2	L2	111	325	C12AA04WS	N4	L4
3	10	54	1/2	41	162	C12AA04WS	N2	L2	122	487	C12AA04WS	N5	L5
4	10	88	5/8	47	303	C58AA04WS	N4	L4	136	885	C58AA06WS	N9	L9
6	10	187	5/8	48	665	C58AA04WS	N7	L7	36	495	C58AA04WS	N5	L5
				TRANSVERSE, LONGITUDINAL BRACING REQUIREMENTS (SELECT EITHER T/L OR SPLAY)									
				4-Way T/L Details (B7.0, B7.1, B7.2, B8.4)					**4-Way Splay Details (B9.0, B9.1, B9.1.1)**				
1 1/2	10	18	3/8	28	38	C38AA04WS	N1	L1	28	38	C38AA04WS	N1	L1
2	10	28	3/8	33	68	C38AA04WS	N1	L1	33	68	C38AA04WS	N1	L1
2 1/2	10	39	1/2	37	108	C12AA04WS	N2	L2	37	108	C12AA04WS	N2	L2
3	10	54	1/2	41	162	C12AA04WS	N2	L2	41	162	C12AA04WS	N2	L2
4	10	88	5/8	47	303	C58AA04WS	N4	L4	47	303	C58AA04WS	N4	L4
6	10	187	5/8	36	495	C58AA04WS	N5	L5	36	495	C58AA04WS	N5	L5

1. TVL = DL + Fv + ($0.2S_{DS}$/1.4 x Wp). All Terms Are Working Loads.
2. Reductions In Actual Installed Brace Spacing Will Result In An Equal Percentage Reduction In Brace Reaction. As An Option When This Occurs ISAT May Substitute An Alternate Anchorage From Tables D1 or D2 Which Meets or Exceeds The Lowered Brace Reaction.
3. At Max. 60 Degree Brace Inclination.
4. Min. 3,000 psi NWC. Any "N Series" Connection May Be Utilized Having A Numeric Designation Equal To Or Higher Than That Shown.
5. Min. 3,000 psi NWC or LWC. Any "L Series" Connection May Be Utilized Having A Numeric Designation Equal To Or Higher Than That Shown.
6. As An Alternate, Brace Anchorage Connections To Structure May Be Employed Using Any Detail From Structural Connections Section "D" Series Details Where Assembly Design Value Meets Or Exceeds Brace Reaction.
7. For Trade Specific Bracing Installation Notes, Refer To Page 10.1
8. Utilize Any "G" Series Vertical Support Connection Having A Design Value Equal To Or Greater Than The Corresponding "Rod Total Vertical Load".
9. Based on Water Filled + Insulated Pipe Weight. Refer to X-Series Weight Charts.
10. Based on Empty Pipe Weight. Refer to X-Series Weight Charts.

REGISTERED PROFESSIONAL ENGINEER — MINO/N VASAZNIK — S 6612 — STRUCTURAL — STATE OF CALIFORNIA

ISAT — A Division of Tomarco Contractor Specialties

International Seismic Application Technology
14848 Northam Street, La Mirada, CA 90638
877-999-4728 (Toll Free) 714-523-0845 (Fax)
www.isatsb.com

Rev. 2
03/12/19
Page
C10-0.5-60

REVIEWED FOR CODE COMPLIANCE BY: William Staehlin DATE: 01-26-2024 CALIFORNIA BUILDING CODE

CABLE BRACING REQUIREMENTS [7]:

SINGLE HUNG PIPE, TYPE K AND TYPE L COPPER TUBING (WATER FILLED + INSULATED) [9] — **MAXIMUM SEISMIC DESIGN FORCE = 0.75 G's**

Requires Use of ISAT Seismic Brackets. Use of Any Non-ISAT Bracket Voids Engineering. — *2013 California Building Code Compliant*

Maximum Pipe Diameter (in.)	Max. Vertical Support Spacing (ft.)	Rod [1] Total Vertical Load (lbs)	Min. [8] Vertical Support Rod Dia. (in.)	TRANSVERSE BRACING REQUIREMENTS					LONGITUDINAL BRACING REQUIREMENTS				
				Max. [2] Brace Spacing (ft.)	Brace [3] Reaction P (lbs)	Min. Brace Assembly E - Pages	Min. Brace Anchorage [6] Form Pour [4] Deck Page D1	Min. Brace Anchorage [6] Metal [5] Deck Page D2	Max. [2] Brace Spacing (ft.)	Brace [3] Reaction P (lbs)	Min. Brace Assembly E - Pages	Min. Brace Anchorage [6] Form Pour [4] Deck Page D1	Min. Brace Anchorage [6] Metal [5] Deck Page D2
				2-Way Transverse Brace Pattern (B6.4, B6.5)					4-Way T/L Details (B7.0, B7.1, B7.2, B8.4)				
1 1/2	8	30	3/8	15	35	C38AA04WS	N1	L1	42	100	C38AA04WS	N2	L2
2	10	57	3/8	16	58	C38AA04WS	N1	L1	48	175	C38AA04WS	N2	L2
2 1/2	10	79	1/2	19	96	C12AA04WS	N1	L1	56	287	C12AA04WS	N3	L3
3	10	108	1/2	21	147	C12AA04WS	N2	L2	54	375	C12AA04WS	N4	L4
4	10	199	5/8	20	260	C58AA04WS	N3	L3	45	580	C58AA04WS	N6	L6
6	10	395	5/8	17	435	C58AA04WS	N5	L5	13	325	C58AA04WS	N4	L4
				TRANSVERSE, LONGITUDINAL BRACING REQUIREMENTS (SELECT EITHER T/L OR SPLAY)									
				4-Way T/L Details (B7.0, B7.1, B7.2, B8.4)					4-Way Splay Details (B9.0, B9.1, B9.1.1)				
1 1/2	8	30	3/8	15	35	C38AA04WS	N1	L1	15	35	C38AA04WS	N1	L1
2	10	57	3/8	16	58	C38AA04WS	N1	L1	16	58	C38AA04WS	N1	L1
2 1/2	10	79	1/2	19	96	C12AA04WS	N1	L1	19	96	C12AA04WS	N1	L1
3	10	108	1/2	21	147	C12AA04WS	N2	L2	21	147	C12AA04WS	N2	L2
4	10	199	5/8	20	260	C58AA04WS	N3	L3	20	260	C58AA04WS	N3	L3
6	10	395	5/8	13	325	C58AA04WS	N4	L4	13	325	C58AA04WS	N4	L4

SINGLE HUNG PIPE, TYPE K AND TYPE L COPPER TUBING (GAS FILLED) [10] — **MAXIMUM SEISMIC DESIGN FORCE = 0.75 G's**

				2-Way Transverse Brace Pattern (B6.4, B6.5)					4-Way T/L Details (B7.0, B7.1, B7.2, B8.4)				
1 1/2	10	18	3/8	23	27	C38AA04WS	N1	L1	69	82	C38AA04WS	N1	L1
2	10	28	3/8	27	48	C38AA04WS	N1	L1	81	145	C38AA04WS	N2	L2
2 1/2	10	39	1/2	31	77	C12AA04WS	N1	L1	92	232	C12AA04WS	N3	L3
3	10	54	1/2	34	117	C12AA04WS	N2	L2	101	351	C12AA04WS	N4	L4
4	10	88	5/8	39	221	C58AA04WS	N3	L3	103	580	C58AA04WS	N6	L6
6	10	187	5/8	36	435	C58AA04WS	N5	L5	27	325	C58AA04WS	N4	L4
				TRANSVERSE, LONGITUDINAL BRACING REQUIREMENTS (SELECT EITHER T/L OR SPLAY)									
				4-Way T/L Details (B7.0, B7.1, B7.2, B8.4)					4-Way Splay Details (B9.0, B9.1, B9.1.1)				
1 1/2	10	18	3/8	23	27	C38AA04WS	N1	L1	23	27	C38AA04WS	N1	L1
2	10	28	3/8	27	48	C38AA04WS	N1	L1	27	48	C38AA04WS	N1	L1
2 1/2	10	39	1/2	31	77	C12AA04WS	N1	L1	31	77	C12AA04WS	N1	L1
3	10	54	1/2	34	117	C12AA04WS	N2	L2	34	117	C12AA04WS	N2	L2
4	10	88	5/8	39	221	C58AA04WS	N3	L3	39	221	C58AA04WS	N3	L3
6	10	187	5/8	27	325	C58AA04WS	N4	L4	27	325	C58AA04WS	N4	L4

1. TVL = DL + Fv + ($0.2S_{DS}$/1.4 x Wp). All Terms Are Working Loads.
2. Reductions In Actual Installed Brace Spacing Will Result In An Equal Percentage Reduction In Brace Reaction. As An Option When This Occurs ISAT May Substitute An Alternate Anchorage From Tables D1 or D2 Which Meets or Exceeds The Lowered Brace Reaction.
3. At Max. 30 Degree Brace Inclination.
4. Min. 3,000 psi NWC. Any "N Series" Connection May Be Utilized Having A Numeric Designation Equal To Or Higher Than That Shown.
5. Min. 3,000 psi NWC or LWC. Any "L Series" Connection May Be Utilized Having A Numeric Designation Equal To Or Higher Than That Shown.
6. As An Alternate, Brace Anchorage Connections To Structure May Be Employed Using Any Detail From Structural Connections Section "D" Series Details Where Assembly Design Value Meets Or Exceeds Brace Reaction.
7. For Trade Specific Bracing Installation Notes, Refer To Page 10.1
8. Utilize Any "G" Series Vertical Support Connection Having A Design Value Equal To Or Greater Than The Corresponding "Rod Total Vertical Load".
9. Based on Water Filled + Insulated Pipe Weight. Refer to X-Series Weight Charts.
10. Based on Empty Pipe Weight. Refer to X-Series Weight Charts.

REGISTERED PROFESSIONAL ENGINEER — MINC/N VASAZNIK — S 6612 — STRUCTURAL — STATE OF CALIFORNIA

ISAT — A Division of Tomarco Contractor Specialties

International Seismic Application Technology
14848 Northam Street, La Mirada, CA 90638
877-999-4728 (Toll Free) 714-523-0845 (Fax)
www.isatsb.com

Rev. 2
03/12/19
Page
C10-0.75-30

REVIEWED FOR CODE COMPLIANCE — OPM-0403 — BY: William Staehlin — DATE: 01-26-2024 — CALIFORNIA BUILDING CODE

CABLE BRACING REQUIREMENTS [7]:

SINGLE HUNG PIPE, TYPE K AND TYPE L COPPER TUBING (WATER FILLED + INSULATED) [9] — **MAXIMUM SEISMIC DESIGN FORCE = 0.75 G's**

Requires Use of ISAT Seismic Brackets. Use of Any Non-ISAT Bracket Voids Engineering. — *2013 California Building Code Compliant*

Maximum Pipe Diameter (in.)	Max. Vertical Support Spacing (ft.)	Rod [1] Total Vertical Load (lbs)	Min. [8] Vertical Support Rod Dia. (in.)	TRANSVERSE BRACING REQUIREMENTS					LONGITUDINAL BRACING REQUIREMENTS				
				Max. [2] Brace Spacing (ft.)	Brace [3] Reaction P (lbs)	Min. Brace Assembly E - Pages	Min. Brace Anchorage [6] Form Pour [4] Deck Page D1	Min. Brace Anchorage [6] Metal [5] Deck Page D2	Max. [2] Brace Spacing (ft.)	Brace [3] Reaction P (lbs)	Min. Brace Assembly E - Pages	Min. Brace Anchorage [6] Form Pour [4] Deck Page D1	Min. Brace Anchorage [6] Metal [5] Deck Page D2
				2-Way Transverse Brace Pattern (B6.4, B6.5)					4-Way T/L Details (B7.0, B7.1, B7.2, B8.4)				
1 1/2	8	30	3/8	15	47	C38AA04WS	N1	L1	42	135	C38AA04WS	N2	L2
2	10	57	3/8	16	79	C38AA04WS	N1	L1	48	236	C38AA04WS	N3	L3
2 1/2	10	79	1/2	19	129	C12AA04WS	N2	L2	56	386	C12AA04WS	N4	L4
3	10	108	1/2	21	198	C12AA04WS	N2	L2	54	505	C12AA04WS	N6	L6
4	10	199	5/8	20	350	C58AA04WS	N4	L4	45	780	C58AA06WS	N8	L8
6	10	395	5/8	17	585	C58AA04WS	N6	L6	13	435	C58AA04WS	N5	L5
				TRANSVERSE, LONGITUDINAL BRACING REQUIREMENTS (SELECT EITHER T/L OR SPLAY)									
				4-Way T/L Details (B7.0, B7.1, B7.2, B8.4)					4-Way Splay Details (B9.0, B9.1, B9.1.1)				
1 1/2	8	30	3/8	15	47	C38AA04WS	N1	L1	15	47	C38AA04WS	N1	L1
2	10	57	3/8	16	79	C38AA04WS	N1	L1	16	79	C38AA04WS	N1	L1
2 1/2	10	79	1/2	19	129	C12AA04WS	N2	L2	19	129	C12AA04WS	N2	L2
3	10	108	1/2	21	198	C12AA04WS	N2	L2	21	198	C12AA04WS	N2	L2
4	10	199	5/8	20	350	C58AA04WS	N4	L4	20	350	C58AA04WS	N4	L4
6	10	395	5/8	13	435	C58AA04WS	N5	L5	13	435	C58AA04WS	N5	L5
SINGLE HUNG PIPE, TYPE K AND TYPE L COPPER TUBING (GAS FILLED) [10]									**MAXIMUM SEISMIC DESIGN FORCE = 0.75 G's**				
				2-Way Transverse Brace Pattern (B6.4, B6.5)					4-Way T/L Details (B7.0, B7.1, B7.2, B8.4)				
1 1/2	10	18	3/8	23	37	C38AA04WS	N1	L1	69	110	C38AA04WS	N2	L2
2	10	28	3/8	27	65	C38AA04WS	N1	L1	81	195	C38AA04WS	N2	L2
2 1/2	10	39	1/2	31	104	C12AA04WS	N2	L2	92	312	C12AA04WS	N4	L4
3	10	54	1/2	34	158	C12AA04WS	N2	L2	101	473	C12AA04WS	N5	L5
4	10	88	5/8	39	298	C58AA04WS	N3	L3	103	780	C58AA06WS	N8	L8
6	10	187	5/8	36	585	C58AA04WS	N6	L6	27	435	C58AA04WS	N5	L5
				TRANSVERSE, LONGITUDINAL BRACING REQUIREMENTS (SELECT EITHER T/L OR SPLAY)									
				4-Way T/L Details (B7.0, B7.1, B7.2, B8.4)					4-Way Splay Details (B9.0, B9.1, B9.1.1)				
1 1/2	10	18	3/8	23	37	C38AA04WS	N1	L1	23	37	C38AA04WS	N1	L1
2	10	28	3/8	27	65	C38AA04WS	N1	L1	27	65	C38AA04WS	N1	L1
2 1/2	10	39	1/2	31	104	C12AA04WS	N2	L2	31	104	C12AA04WS	N2	L2
3	10	54	1/2	34	158	C12AA04WS	N2	L2	34	158	C12AA04WS	N2	L2
4	10	88	5/8	39	298	C58AA04WS	N3	L3	39	298	C58AA04WS	N3	L3
6	10	187	5/8	27	435	C58AA04WS	N5	L5	27	435	C58AA04WS	N5	L5

1. TVL = DL + Fv + ($0.2S_{DS}$/1.4 x Wp). All Terms Are Working Loads.
2. Reductions In Actual Installed Brace Spacing Will Result In An Equal Percentage Reduction In Brace Reaction. As An Option When This Occurs ISAT May Substitute An Alternate Anchorage From Tables D1 or D2 Which Meets or Exceeds The Lowered Brace Reaction.
3. At Max. 50 Degree Brace Inclination.
4. Min. 3,000 psi NWC. Any "N Series" Connection May Be Utilized Having A Numeric Designation Equal To Or Higher Than That Shown.
5. Min. 3,000 psi NWC or LWC. Any "L Series" Connection May Be Utilized Having A Numeric Designation Equal To Or Higher Than That Shown.
6. As An Alternate, Brace Anchorage Connections To Structure May Be Employed Using Any Detail From Structural Connections Section "D" Series Details Where Assembly Design Value Meets Or Exceeds Brace Reaction.
7. For Trade Specific Bracing Installation Notes, Refer To Page 10.1
8. Utilize Any "G" Series Vertical Support Connection Having A Design Value Equal To Or Greater Than The Corresponding "Rod Total Vertical Load".
9. Based on Water Filled + Insulated Pipe Weight. Refer to X-Series Weight Charts.
10. Based on Empty Pipe Weight. Refer to X-Series Weight Charts.

REGISTERED PROFESSIONAL ENGINEER MARCIN WASAZNIK S 6612 STRUCTURAL STATE OF CALIFORNIA

ISAT
A Division of Tomarco Contractor Specialties

International Seismic Application Technology
14848 Northam Street, La Mirada, CA 90638
877-999-4728 (Toll Free) 714-523-0845 (Fax)
www.isatsb.com

Rev. 2
03/12/19

REVIEWED FOR CODE COMPLIANCE BY: William Staehlin DATE: 01-26-2024 CALIFORNIA BUILDING CODE

CABLE BRACING REQUIREMENTS [7]:

SINGLE HUNG PIPE, TYPE K AND TYPE L COPPER TUBING (WATER FILLED + INSULATED) [9] — **MAXIMUM SEISMIC DESIGN FORCE = 0.75 G's**

Requires Use of ISAT Seismic Brackets. Use of Any Non-ISAT Bracket Voids Engineering. — *2013 California Building Code Compliant*

Maximum Pipe Diameter (in.)	Max. Vertical Support Spacing (ft.)	Rod [1] Total Vertical Load (lbs)	Min. [8] Vertical Support Rod Dia. (in.)	TRANSVERSE BRACING REQUIREMENTS					LONGITUDINAL BRACING REQUIREMENTS				
				Max. [2] Brace Spacing (ft.)	Brace [3] Reaction P (lbs)	Min. Brace Assembly E - Pages	Min. Brace Anchorage [6] Form Pour [4] Deck Page D1	Min. Brace Anchorage [6] Metal [5] Deck Page D2	Max. [2] Brace Spacing (ft.)	Brace [3] Reaction P (lbs)	Min. Brace Assembly E - Pages	Min. Brace Anchorage [6] Form Pour [4] Deck Page D1	Min. Brace Anchorage [6] Metal [5] Deck Page D2
				2-Way Transverse Brace Pattern (B6.4, B6.5)					4-Way T/L Details (B7.0, B7.1, B7.2, B8.4)				
1 1/2	8	30	3/8	15	60	C38AA04WS	N1	L1	36	150	C38AA04WS	N2	L2
2	10	57	3/8	16	101	C38AA04WS	N2	L2	48	304	C38AA04WS	N4	L4
2 1/2	10	79	1/2	19	165	C12AA04WS	N2	L2	56	496	C12AA04WS	N5	L5
3	10	108	1/2	21	254	C12AA04WS	N3	L3	47	570	C12AA04WS	N6	L6
4	10	199	5/8	18	395	C58AA04WS	N4	L4	40	885	C58AA06WS	N9	L9
6	10	395	5/8	15	665	C58AA04WS	N7	L7	11	495	C58AA04WS	N5	L5
				TRANSVERSE, LONGITUDINAL BRACING REQUIREMENTS (SELECT EITHER T/L OR SPLAY)									
				4-Way T/L Details (B7.0, B7.1, B7.2, B8.4)					4-Way Splay Details (B9.0, B9.1, B9.1.1)				
1 1/2	8	30	3/8	15	60	C38AA04WS	N1	L1	15	60	C38AA04WS	N1	L1
2	10	57	3/8	16	101	C38AA04WS	N2	L2	16	101	C38AA04WS	N2	L2
2 1/2	10	79	1/2	19	165	C12AA04WS	N2	L2	19	165	C12AA04WS	N2	L2
3	10	108	1/2	21	254	C12AA04WS	N3	L3	21	254	C12AA04WS	N3	L3
4	10	199	5/8	18	395	C58AA04WS	N4	L4	18	395	C58AA04WS	N4	L4
6	10	395	5/8	11	495	C58AA04WS	N5	L5	11	495	C58AA04WS	N5	L5
SINGLE HUNG PIPE, TYPE K AND TYPE L COPPER TUBING (GAS FILLED) [10]									**MAXIMUM SEISMIC DESIGN FORCE = 0.75 G's**				
				2-Way Transverse Brace Pattern (B6.4, B6.5)					4-Way T/L Details (B7.0, B7.1, B7.2, B8.4)				
1 1/2	10	18	3/8	23	47	C38AA04WS	N1	L1	69	141	C38AA04WS	N2	L2
2	10	28	3/8	27	84	C38AA04WS	N1	L1	81	251	C38AA04WS	N3	L3
2 1/2	10	39	1/2	31	134	C12AA04WS	N2	L2	92	402	C12AA04WS	N5	L5
3	10	54	1/2	34	203	C12AA04WS	N3	L3	95	570	C12AA04WS	N6	L6
4	10	88	5/8	39	382	C58AA04WS	N4	L4	91	885	C58AA06WS	N9	L9
6	10	187	5/8	32	665	C58AA04WS	N7	L7	24	495	C58AA04WS	N5	L5
				TRANSVERSE, LONGITUDINAL BRACING REQUIREMENTS (SELECT EITHER T/L OR SPLAY)									
				4-Way T/L Details (B7.0, B7.1, B7.2, B8.4)					4-Way Splay Details (B9.0, B9.1, B9.1.1)				
1 1/2	10	18	3/8	23	47	C38AA04WS	N1	L1	23	47	C38AA04WS	N1	L1
2	10	28	3/8	27	84	C38AA04WS	N1	L1	27	84	C38AA04WS	N1	L1
2 1/2	10	39	1/2	31	134	C12AA04WS	N2	L2	31	134	C12AA04WS	N2	L2
3	10	54	1/2	34	203	C12AA04WS	N3	L3	34	203	C12AA04WS	N3	L3
4	10	88	5/8	39	382	C58AA04WS	N4	L4	39	382	C58AA04WS	N4	L4
6	10	187	5/8	24	495	C58AA04WS	N5	L5	24	495	C58AA04WS	N5	L5

1. TVL = DL + Fv + ($0.2S_{DS}$/1.4 x Wp). All Terms Are Working Loads.
2. Reductions In Actual Installed Brace Spacing Will Result In An Equal Percentage Reduction In Brace Reaction. As An Option When This Occurs ISAT May Substitute An Alternate Anchorage From Tables D1 or D2 Which Meets or Exceeds The Lowered Brace Reaction.
3. At Max. 60 Degree Brace Inclination.
4. Min. 3,000 psi NWC. Any "N Series" Connection May Be Utilized Having A Numeric Designation Equal To Or Higher Than That Shown.
5. Min. 3,000 psi NWC or LWC. Any "L Series" Connection May Be Utilized Having A Numeric Designation Equal To Or Higher Than That Shown.
6. As An Alternate, Brace Anchorage Connections To Structure May Be Employed Using Any Detail From Structural Connections Section "D" Series Details Where Assembly Design Value Meets Or Exceeds Brace Reaction.
7. For Trade Specific Bracing Installation Notes, Refer To Page 10.1
8. Utilize Any "G" Series Vertical Support Connection Having A Design Value Equal To Or Greater Than The Corresponding "Rod Total Vertical Load".
9. Based on Water Filled + Insulated Pipe Weight. Refer to X-Series Weight Charts.
10. Based on Empty Pipe Weight. Refer to X-Series Weight Charts.

REGISTERED PROFESSIONAL ENGINEER — MARCIN WASAZNIK — S 6612 — STRUCTURAL — STATE OF CALIFORNIA

ISAT
A Division of Tomarco Contractor Specialties

International Seismic Application Technology
14848 Northam Street, La Mirada, CA 90638
877-999-4728 (Toll Free) 714-523-0845 (Fax)
www.isatsb.com

Rev. 2
03/12/19
Page
C10-0.75-60

REVIEWED FOR CODE COMPLIANCE BY: William Staehlin DATE: 01-26-2024 CALIFORNIA BUILDING CODE

CABLE BRACING REQUIREMENTS [7]:

SINGLE HUNG PIPE, TYPE K AND TYPE L COPPER TUBING (WATER FILLED + INSULATED) [9] — **MAXIMUM SEISMIC DESIGN FORCE = 1.00 G's**

Requires Use of ISAT Seismic Brackets. Use of Any Non-ISAT Bracket Voids Engineering. — *2013 California Building Code Compliant*

Maximum Pipe Diameter (in.)	Max. Vertical Support Spacing (ft.)	Rod [1] Total Vertical Load (lbs)	Min. [8] Vertical Support Rod Dia. (in.)	TRANSVERSE BRACING REQUIREMENTS					LONGITUDINAL BRACING REQUIREMENTS				
				Max. [2] Brace Spacing (ft.)	Brace [3] Reaction P (lbs)	Min. Brace Assembly E - Pages	Min. Brace Anchorage [6] Form Pour [4] Deck Page D1	Min. Brace Anchorage [6] Metal [5] Deck Page D2	Max. [2] Brace Spacing (ft.)	Brace [3] Reaction P (lbs)	Min. Brace Assembly E - Pages	Min. Brace Anchorage [6] Form Pour [4] Deck Page D1	Min. Brace Anchorage [6] Metal [5] Deck Page D2
				2-Way Transverse Brace Pattern (B6.4, B6.5)					4-Way T/L Details (B7.0, B7.1, B7.2, B8.4)				
1 1/2	8	30	3/8	13	40	C38AA04WS	N1	L1	31	100	C38AA04WS	N2	L2
2	10	57	3/8	14	67	C38AA04WS	N1	L1	42	202	C38AA04WS	N3	L3
2 1/2	10	79	1/2	16	110	C12AA04WS	N2	L2	49	331	C12AA04WS	N4	L4
3	10	108	1/2	18	169	C12AA04WS	N2	L2	40	375	C12AA04WS	N4	L4
4	10	199	5/8	15	260	C58AA04WS	N3	L3	34	580	C58AA04WS	N6	L6
6	10	395	5/8	13	435	C58AA04WS	N5	L5	10	325	C58AA04WS	N4	L4
				TRANSVERSE, LONGITUDINAL BRACING REQUIREMENTS (SELECT EITHER T/L OR SPLAY)									
				4-Way T/L Details (B7.0, B7.1, B7.2, B8.4)					4-Way Splay Details (B9.0, B9.1, B9.1.1)				
1 1/2	8	30	3/8	13	40	C38AA04WS	N1	L1	13	40	C38AA04WS	N1	L1
2	10	57	3/8	14	67	C38AA04WS	N1	L1	14	67	C38AA04WS	N1	L1
2 1/2	10	79	1/2	16	110	C12AA04WS	N2	L2	16	110	C12AA04WS	N2	L2
3	10	108	1/2	18	169	C12AA04WS	N2	L2	18	169	C12AA04WS	N2	L2
4	10	199	5/8	15	260	C58AA04WS	N3	L3	15	260	C58AA04WS	N3	L3
6	10	395	5/8	10	325	C58AA04WS	N4	L4	10	325	C58AA04WS	N4	L4

SINGLE HUNG PIPE, TYPE K AND TYPE L COPPER TUBING (GAS FILLED) [10] — **MAXIMUM SEISMIC DESIGN FORCE = 1.00 G's**

				2-Way Transverse Brace Pattern (B6.4, B6.5)					4-Way T/L Details (B7.0, B7.1, B7.2, B8.4)				
1 1/2	10	18	3/8	20	31	C38AA04WS	N1	L1	60	94	C38AA04WS	N1	L1
2	10	28	3/8	23	56	C38AA04WS	N1	L1	70	167	C38AA04WS	N2	L2
2 1/2	10	39	1/2	26	89	C12AA04WS	N1	L1	79	268	C12AA04WS	N3	L3
3	10	54	1/2	29	135	C12AA04WS	N2	L2	81	375	C12AA04WS	N4	L4
4	10	88	5/8	34	255	C58AA04WS	N3	L3	77	580	C58AA04WS	N6	L6
6	10	187	5/8	27	435	C58AA04WS	N5	L5	20	325	C58AA04WS	N4	L4
				TRANSVERSE, LONGITUDINAL BRACING REQUIREMENTS (SELECT EITHER T/L OR SPLAY)									
				4-Way T/L Details (B7.0, B7.1, B7.2, B8.4)					4-Way Splay Details (B9.0, B9.1, B9.1.1)				
1 1/2	10	18	3/8	20	31	C38AA04WS	N1	L1	20	31	C38AA04WS	N1	L1
2	10	28	3/8	23	56	C38AA04WS	N1	L1	23	56	C38AA04WS	N1	L1
2 1/2	10	39	1/2	26	89	C12AA04WS	N1	L1	26	89	C12AA04WS	N1	L1
3	10	54	1/2	29	135	C12AA04WS	N2	L2	29	135	C12AA04WS	N2	L2
4	10	88	5/8	34	255	C58AA04WS	N3	L3	34	255	C58AA04WS	N3	L3
6	10	187	5/8	20	325	C58AA04WS	N4	L4	20	325	C58AA04WS	N4	L4

1. TVL = DL + Fv + ($0.2S_{DS}$/1.4 x Wp). All Terms Are Working Loads.
2. Reductions In Actual Installed Brace Spacing Will Result In An Equal Percentage Reduction In Brace Reaction. As An Option When This Occurs ISAT May Substitute An Alternate Anchorage From Tables D1 or D2 Which Meets or Exceeds The Lowered Brace Reaction.
3. At Max. 30 Degree Brace Inclination.
4. Min. 3,000 psi NWC. Any "N Series" Connection May Be Utilized Having A Numeric Designation Equal To Or Higher Than That Shown.
5. Min. 3,000 psi NWC or LWC. Any "L Series" Connection May Be Utilized Having A Numeric Designation Equal To Or Higher Than That Shown.
6. As An Alternate, Brace Anchorage Connections To Structure May Be Employed Using Any Detail From Structural Connections Section "D" Series Details Where Assembly Design Value Meets Or Exceeds Brace Reaction.
7. For Trade Specific Bracing Installation Notes, Refer To Page 10.1
8. Utilize Any "G" Series Vertical Support Connection Having A Design Value Equal To Or Greater Than The Corresponding "Rod Total Vertical Load".
9. Based on Water Filled + Insulated Pipe Weight. Refer to X-Series Weight Charts.
10. Based on Empty Pipe Weight. Refer to X-Series Weight Charts.

REGISTERED PROFESSIONAL ENGINEER — MINO N. VASAZNIK — S 6612 — STRUCTURAL — STATE OF CALIFORNIA

ISAT
A Division of Tomarco Contractor Specialties

International Seismic Application Technology
14848 Northam Street, La Mirada, CA 90638
877-999-4728 (Toll Free) 714-523-0845 (Fax)
www.isatsb.com

Rev. 2
03/12/19

REVIEWED FOR CODE COMPLIANCE BY: William Staehlin DATE: 01-26-2024 CALIFORNIA BUILDING CODE

CABLE BRACING REQUIREMENTS [7]:

SINGLE HUNG PIPE, TYPE K AND TYPE L COPPER TUBING (WATER FILLED + INSULATED) [9] — **MAXIMUM SEISMIC DESIGN FORCE = 1.00 G's**

Requires Use of ISAT Seismic Brackets. Use of Any Non-ISAT Bracket Voids Engineering. — *2013 California Building Code Compliant*

Maximum Pipe Diameter (in.)	Max. Vertical Support Spacing (ft.)	Rod [1] Total Vertical Load (lbs)	Min. [8] Vertical Support Rod Dia. (in.)	TRANSVERSE BRACING REQUIREMENTS: Max. [2] Brace Spacing (ft.)	Brace [3] Reaction P (lbs)	Min. Brace Assembly E - Pages	Min. Brace Anchorage [6]: Form Pour [4] Deck Page D1	Metal [5] Deck Page D2	LONGITUDINAL BRACING REQUIREMENTS: Max. [2] Brace Spacing (ft.)	Brace [3] Reaction P (lbs)	Min. Brace Assembly E - Pages	Min. Brace Anchorage [6]: Form Pour [4] Deck Page D1	Metal [5] Deck Page D2
				2-Way Transverse Brace Pattern (B6.4, B6.5)					**4-Way T/L Details (B7.0, B7.1, B7.2, B8.4)**				
1 1/2	8	30	3/8	13	54	C38AA04WS	N1	L1	31	135	C38AA04WS	N2	L2
2	10	57	3/8	14	91	C38AA04WS	N1	L1	42	273	C38AA04WS	N3	L3
2 1/2	10	79	1/2	16	149	C12AA04WS	N2	L2	49	446	C12AA04WS	N5	L5
3	10	108	1/2	18	228	C12AA04WS	N3	L3	40	505	C12AA04WS	N6	L6
4	10	199	5/8	15	350	C58AA04WS	N4	L4	34	780	C58AA06WS	N8	L8
6	10	395	5/8	13	585	C58AA04WS	N6	L6	10	435	C58AA04WS	N5	L5
				TRANSVERSE, LONGITUDINAL BRACING REQUIREMENTS (SELECT EITHER T/L OR SPLAY)									
				4-Way T/L Details (B7.0, B7.1, B7.2, B8.4)					**4-Way Splay Details (B9.0, B9.1, B9.1.1)**				
1 1/2	8	30	3/8	13	54	C38AA04WS	N1	L1	13	54	C38AA04WS	N1	L1
2	10	57	3/8	14	91	C38AA04WS	N1	L1	14	91	C38AA04WS	N1	L1
2 1/2	10	79	1/2	16	149	C12AA04WS	N2	L2	16	149	C12AA04WS	N2	L2
3	10	108	1/2	18	228	C12AA04WS	N3	L3	18	228	C12AA04WS	N3	L3
4	10	199	5/8	15	350	C58AA04WS	N4	L4	15	350	C58AA04WS	N4	L4
6	10	395	5/8	10	435	C58AA04WS	N5	L5	10	435	C58AA04WS	N5	L5
SINGLE HUNG PIPE, TYPE K AND TYPE L COPPER TUBING (GAS FILLED) [10]									**MAXIMUM SEISMIC DESIGN FORCE = 1.00 G's**				
				2-Way Transverse Brace Pattern (B6.4, B6.5)					**4-Way T/L Details (B7.0, B7.1, B7.2, B8.4)**				
1 1/2	10	18	3/8	20	42	C38AA04WS	N1	L1	60	127	C38AA04WS	N2	L2
2	10	28	3/8	23	75	C38AA04WS	N1	L1	70	226	C38AA04WS	N3	L3
2 1/2	10	39	1/2	26	120	C12AA04WS	N2	L2	79	361	C12AA04WS	N4	L4
3	10	54	1/2	29	182	C12AA04WS	N2	L2	81	505	C12AA04WS	N6	L6
4	10	88	5/8	34	344	C58AA04WS	N4	L4	77	780	C58AA06WS	N8	L8
6	10	187	5/8	27	585	C58AA04WS	N6	L6	20	435	C58AA04WS	N5	L5
				TRANSVERSE, LONGITUDINAL BRACING REQUIREMENTS (SELECT EITHER T/L OR SPLAY)									
				4-Way T/L Details (B7.0, B7.1, B7.2, B8.4)					**4-Way Splay Details (B9.0, B9.1, B9.1.1)**				
1 1/2	10	18	3/8	20	42	C38AA04WS	N1	L1	20	42	C38AA04WS	N1	L1
2	10	28	3/8	23	75	C38AA04WS	N1	L1	23	75	C38AA04WS	N1	L1
2 1/2	10	39	1/2	26	120	C12AA04WS	N2	L2	26	120	C12AA04WS	N2	L2
3	10	54	1/2	29	182	C12AA04WS	N2	L2	29	182	C12AA04WS	N2	L2
4	10	88	5/8	34	344	C58AA04WS	N4	L4	34	344	C58AA04WS	N4	L4
6	10	187	5/8	20	435	C58AA04WS	N5	L5	20	435	C58AA04WS	N5	L5

1. TVL = DL + Fv + ($0.2S_{DS}$/1.4 x Wp). All Terms Are Working Loads.
2. Reductions In Actual Installed Brace Spacing Will Result In An Equal Percentage Reduction In Brace Reaction. As An Option When This Occurs ISAT May Substitute An Alternate Anchorage From Tables D1 or D2 Which Meets or Exceeds The Lowered Brace Reaction.
3. At Max. 50 Degree Brace Inclination.
4. Min. 3,000 psi NWC. Any "N Series" Connection May Be Utilized Having A Numeric Designation Equal To Or Higher Than That Shown.
5. Min. 3,000 psi NWC or LWC. Any "L Series" Connection May Be Utilized Having A Numeric Designation Equal To Or Higher Than That Shown.
6. As An Alternate, Brace Anchorage Connections To Structure May Be Employed Using Any Detail From Structural Connections Section "D" Series Details Where Assembly Design Value Meets Or Exceeds Brace Reaction.
7. For Trade Specific Bracing Installation Notes, Refer To Page 10.1
8. Utilize Any "G" Series Vertical Support Connection Having A Design Value Equal To Or Greater Than The Corresponding "Rod Total Vertical Load".
9. Based on Water Filled + Insulated Pipe Weight. Refer to X-Series Weight Charts.
10. Based on Empty Pipe Weight. Refer to X-Series Weight Charts.

REGISTERED PROFESSIONAL ENGINEER — MINC/N VASAZNIK — S 6612 — STRUCTURAL — STATE OF CALIFORNIA

ISAT — A Division of Tomarco Contractor Specialties

International Seismic Application Technology
14848 Northam Street, La Mirada, CA 90638
877-999-4728 (Toll Free) 714-523-0845 (Fax)
www.isatsb.com

Rev. 2
03/12/19

CABLE BRACING REQUIREMENTS [7] :

SINGLE HUNG PIPE, TYPE K AND TYPE L COPPER TUBING (WATER FILLED + INSULATED) [9] — **MAXIMUM SEISMIC DESIGN FORCE = 1.00 G's**

Requires Use of ISAT Seismic Brackets. Use of Any Non-ISAT Bracket Voids Engineering. — *2013 California Building Code Compliant*

Maximum Pipe Diameter (in.)	Max. Vertical Support Spacing (ft.)	Rod [1] Total Vertical Load (lbs)	Min. [8] Vertical Support Rod Dia. (in.)	TRANSVERSE BRACING REQUIREMENTS: Max. [2] Brace Spacing (ft.)	Brace [3] Reaction P (lbs)	Min. Brace Assembly E - Pages	Min. Brace Anchorage [6]: Form Pour [4] Deck Page D1	Metal [5] Deck Page D2	LONGITUDINAL BRACING REQUIREMENTS: Max. [2] Brace Spacing (ft.)	Brace [3] Reaction P (lbs)	Min. Brace Assembly E - Pages	Min. Brace Anchorage [6]: Form Pour [4] Deck Page D1	Metal [5] Deck Page D2
				2-Way Transverse Brace Pattern (B6.4, B6.5)					**4-Way T/L Details (B7.0, B7.1, B7.2, B8.4)**				
1 1/2	8	30	3/8	13	70	C38AA04WS	N1	L1	27	150	C38AA04WS	N2	L2
2	10	57	3/8	14	117	C38AA04WS	N2	L2	42	351	C38AA04WS	N4	L4
2 1/2	10	79	1/2	16	191	C12AA04WS	N2	L2	49	573	C12AA04WS	N6	L6
3	10	108	1/2	18	294	C12AA04WS	N3	L3	35	570	C12AA04WS	N6	L6
4	10	199	5/8	13	395	C58AA04WS	N4	L4	30	885	C58AA06WS	N9	L9
				TRANSVERSE, LONGITUDINAL BRACING REQUIREMENTS (SELECT EITHER T/L OR SPLAY)									
				4-Way T/L Details (B7.0, B7.1, B7.2, B8.4)					**4-Way Splay Details (B9.0, B9.1, B9.1.1)**				
1 1/2	8	30	3/8	13	70	C38AA04WS	N1	L1	13	70	C38AA04WS	N1	L1
2	10	57	3/8	14	117	C38AA04WS	N2	L2	14	117	C38AA04WS	N2	L2
2 1/2	10	79	1/2	16	191	C12AA04WS	N2	L2	16	191	C12AA04WS	N2	L2
3	10	108	1/2	18	294	C12AA04WS	N3	L3	18	294	C12AA04WS	N3	L3
4	10	199	5/8	13	395	C58AA04WS	N4	L4	13	395	C58AA04WS	N4	L4

SINGLE HUNG PIPE, TYPE K AND TYPE L COPPER TUBING (GAS FILLED) [10] — **MAXIMUM SEISMIC DESIGN FORCE = 1.00 G's**

				2-Way Transverse Brace Pattern (B6.4, B6.5)					**4-Way T/L Details (B7.0, B7.1, B7.2, B8.4)**				
1 1/2	10	18	3/8	20	54	C38AA04WS	N1	L1	55	150	C38AA04WS	N2	L2
2	10	28	3/8	23	97	C38AA04WS	N1	L1	70	290	C38AA04WS	N3	L3
2 1/2	10	39	1/2	26	155	C12AA04WS	N2	L2	79	464	C12AA04WS	N5	L5
3	10	54	1/2	29	234	C12AA04WS	N3	L3	71	570	C12AA04WS	N6	L6
4	10	88	5/8	30	395	C58AA04WS	N4	L4	68	885	C58AA06WS	N9	L9
6	10	187	5/8	24	665	C58AA04WS	N7	L7	18	495	C58AA04WS	N5	L5
				TRANSVERSE, LONGITUDINAL BRACING REQUIREMENTS (SELECT EITHER T/L OR SPLAY)									
				4-Way T/L Details (B7.0, B7.1, B7.2, B8.4)					**4-Way Splay Details (B9.0, B9.1, B9.1.1)**				
1 1/2	10	18	3/8	20	54	C38AA04WS	N1	L1	20	54	C38AA04WS	N1	L1
2	10	28	3/8	23	97	C38AA04WS	N1	L1	23	97	C38AA04WS	N1	L1
2 1/2	10	39	1/2	26	155	C12AA04WS	N2	L2	26	155	C12AA04WS	N2	L2
3	10	54	1/2	29	234	C12AA04WS	N3	L3	29	234	C12AA04WS	N3	L3
4	10	88	5/8	30	395	C58AA04WS	N4	L4	30	395	C58AA04WS	N4	L4
6	10	187	5/8	18	495	C58AA04WS	N5	L5	18	495	C58AA04WS	N5	L5

1. TVL = DL + Fv + ($0.2S_{DS}$/1.4 x Wp). All Terms Are Working Loads.
2. Reductions In Actual Installed Brace Spacing Will Result In An Equal Percentage Reduction In Brace Reaction. As An Option When This Occurs ISAT May Substitute An Alternate Anchorage From Tables D1 or D2 Which Meets or Exceeds The Lowered Brace Reaction.
3. At Max. 60 Degree Brace Inclination.
4. Min. 3,000 psi NWC. Any "N Series" Connection May Be Utilized Having A Numeric Designation Equal To Or Higher Than That Shown.
5. Min. 3,000 psi NWC or LWC. Any "L Series" Connection May Be Utilized Having A Numeric Designation Equal To Or Higher Than That Shown.
6. As An Alternate, Brace Anchorage Connections To Structure May Be Employed Using Any Detail From Structural Connections Section "D" Series Details Where Assembly Design Value Meets Or Exceeds Brace Reaction.
7. For Trade Specific Bracing Installation Notes, Refer To Page 10.1
8. Utilize Any "G" Series Vertical Support Connection Having A Design Value Equal To Or Greater Than The Corresponding "Rod Total Vertical Load".
9. Based on Water Filled + Insulated Pipe Weight. Refer to X-Series Weight Charts.
10. Based on Empty Pipe Weight. Refer to X-Series Weight Charts.

REGISTERED PROFESSIONAL ENGINEER — MARCIN WASAZNIK — S 6612 — STRUCTURAL — STATE OF CALIFORNIA

ISAT — A Division of Tomarco Contractor Specialties

International Seismic Application Technology
14848 Northam Street, La Mirada, CA 90638
877-999-4728 (Toll Free) 714-523-0845 (Fax)
www.isatsb.com

Rev. 2
03/12/19
Page
C10-1-60

REVIEWED FOR CODE COMPLIANCE
OPM-0403
By: William Staehlin
DATE: 01-26-2024
CALIFORNIA BUILDING CODE

RIGID BRACING REQUIREMENTS [7, 9, 10]

SINGLE HUNG STEEL PIPE (SCHED. 40) — **MAXIMUM SEISMIC DESIGN FORCE = 0.25 G's**

Requires Use of ISAT Seismic Brackets. Use of Any Non-ISAT Bracket Voids Engineering. 2013 California Building Code Compliant

Maximum Pipe Diameter (in.)	Max. Vertical Support Spacing (ft.)	Rod [1] Total Vertical Load (lbs)	Min. [8] Vertical Support Rod Dia. (in.)	TRANSVERSE BRACING REQUIREMENTS: Max. [2] Brace Spacing (ft.)	Brace [3] Reaction P (lbs)	Min. Brace Assembly E - Pages	Min. Brace Anchorage [6]: Form Pour [4] Deck Page D1	Metal [5] Deck Page D2	LONGITUDINAL BRACING REQUIREMENTS: Max. [2] Brace Spacing (ft.)	Brace [3] Reaction P (lbs)	Min. Brace Assembly E - Pages	Min. Brace Anchorage [6]: Form Pour [4] Deck Page D1	Metal [5] Deck Page D2
				1-Way Transverse Brace Pattern (B1.4, B1.5)					**2-Way Trans., Longit. Brace Pattern (B3.0, B3.1, B3.3)**				
1 1/2	10	133	3/8	39	48	R38AAEM306	N1	L1	117	143	R38AAEM306	N2	L2
2	10	196	3/8	43	74	R38AAEM306	N1	L1	130	222	R38AAEM306	N3	L3
2 1/2	10	314	1/2	48	123	R12AAEM306	N2	L2	145	370	R12AAEM406	N4	L4
3	10	448	1/2	53	182	R12AAEM306	N2	L2	160	546	R12AAEM406	N6	L6
4	10	783	5/8	58	329	R58AAEM409	N4	L4	175	987	R58AAEM506	N10	L10
5	10	1,007	5/8	65	504	R58AAEM406	N6	L6	153	1,185	R58AAEM506	N12	L12
6	10	1,256	5/8	71	728	R58AAEM509	N8	L8	132	1,365	R58AAEM506	N14	L14
8	10	1,338	5/8	66	1,055	R58AAEM506	N11	L11	34	540	R58AAEM406	N6	L6
10	10	1,903	5/8	31	724	R58AAEM509	N8	L8	62	1,449	R58AAEM506	N15	L15
12	10	2,207	5/8	23	700	R58AAEM509	N8	L8	46	1,401	R58AAEM506	N15	L15
14	10	2,275	5/8	16	563	R58AAEM406	N6	L6	32	1,126	R58AAEM506	N12	L12
				2-Way Transverse Brace Pattern (B2.12, B2.13)					**4-Way Transverse, Longit. Brace Pattern (B4.0, B4.1, B4.3)**				
1 1/2	10	57	3/8	39	24	R38AAEM306	N1	L1	117	71	R38AAEM306	N1	L1
2	10	80	3/8	43	37	R38AAEM306	N1	L1	130	111	R38AAEM306	N2	L2
2 1/2	10	119	1/2	48	62	R12AAEM306	N1	L1	145	185	R12AAEM306	N2	L2
3	10	160	1/2	53	91	R12AAEM306	N1	L1	160	273	R12AAEM306	N3	L3
4	10	263	5/8	58	164	R58AAEM306	N2	L2	175	493	R58AAEM406	N5	L5
5	10	363	5/8	65	252	R58AAEM306	N3	L3	153	593	R58AAEM406	N6	L6
6	10	482	5/8	71	364	R58AAEM406	N4	L4	132	683	R58AAEM509	N7	L7
8	10	746	5/8	66	528	R58AAEM406	N6	L6	34	270	R58AAEM306	N3	L3
10	10	1,093	5/8	41	479	R58AAEM406	N5	L5	123	1,437	R58AAEM506	N15	L15
12	10	1,424	5/8	31	472	R58AAEM406	N5	L5	93	1,416	R58AAEM506	N15	L15
16	10	2,028	5/8	22	477	R58AAEM406	N5	L5	66	1,431	R58AAEM506	N15	L15
				TRANSVERSE, LONGITUDINAL BRACING REQUIREMENTS									
				4-Way Splayed Brace Pattern (B4.13, B4.14)									
1 1/2	10	57	3/8	39	34	R38AAEM306	N1	L1					
2	10	80	3/8	43	52	R38AAEM306	N1	L1					
2 1/2	10	119	1/2	48	87	R12AAEM306	N1	L1					
3	10	160	1/2	53	129	R12AAEM306	N2	L2					
4	10	263	5/8	58	233	R58AAEM306	N3	L3					
5	10	363	5/8	65	356	R58AAEM406	N4	L4					
6	10	482	5/8	71	514	R58AAEM406	N6	L6					
8	10	746	5/8	66	746	R58AAEM509	N8	L8					
10	10	1,093	5/8	77	1,269	R58AAEM506	N13	L13					
12	10	1,424	5/8	59	1,269	R58AAEM506	N13	L13					
14	10	1,646	5/8	52	1,283	R58AAEM506	N13	L13					
16	10	2,028	5/8	42	1,292	R58AAEM506	N13	L13					

1. TVL = DL + Fv + ($0.2S_{DS}$/1.4 x Wp). All Terms Are Working Loads.
2. Reductions In Actual Installed Brace Spacing Will Result In An Equal Percentage Reduction In Brace Reaction. As An Option When This Occurs ISAT May Substitute An Alternate Anchorage From Tables D1 or D2 Which Meets or Exceeds The Lowered Brace Reaction.
3. At Max. 30 Degree Brace Inclination.
4. Min. 3,000 psi NWC. Any "N Series" Connection May Be Utilized Having A Numeric Designation Equal To Or Higher Than That Shown.
5. Min. 3,000 psi NWC or LWC. Any "L Series" Connection May Be Utilized Having A Numeric Designation Equal To Or Higher Than That Shown.
6. As An Alternate, Brace Anchorage Connections To Structure May Be Employed Using Any Detail From Structural Connections Section "D" Series Details Where Assembly Design Value Meets Or Exceeds Brace Reaction.
7. For Trade Specific Bracing Installation Notes, Refer To Page 8.1 or 10.1.
8. Utilize Any "G" Series Vertical Support Connection Having A Design Value Equal To Or Greater Than The Corresponding "Rod Total Vertical Load".
9. Based on Water Filled + Insulated Pipe Weight. Refer To Page X Series Weight Charts.
10. Pipe Sizes 12" and Greater Are Sched STD

REGISTERED PROFESSIONAL ENGINEER MARCIN WASOWNIK S 6612 STRUCTURAL STATE OF CALIFORNIA

ISAT
A Division of Tomarco Contractor Specialties

International Seismic Application Technology
14848 Northam Street, La Mirada, CA 90638
877-999-4728 (Toll Free) 714-523-0845 (Fax)
www.isatsb.com

Rev. 2
03/12/19
Page
C11-0.25-30

REVIEWED FOR CODE COMPLIANCE
OPM 0403
By William Staehlin
DATE 01/26/2024
CALIFORNIA BUILDING CODE, 2022

RIGID BRACING REQUIREMENTS [7, 9, 10]

SINGLE HUNG STEEL PIPE (SCHED. 40) — **MAXIMUM SEISMIC DESIGN FORCE = 0.25 G's**

Requires Use of ISAT Seismic Brackets. Use of Any Non-ISAT Bracket Voids Engineering. 2013 California Building Code Compliant

Maximum Pipe Diameter (in.)	Max. Vertical Support Spacing (ft.)	Rod [1] Total Vertical Load (lbs)	Min. [8] Vertical Support Rod Dia. (in.)	TRANSVERSE BRACING REQUIREMENTS: Max. [2] Brace Spacing (ft.)	Brace [3] Reaction P (lbs)	Min. Brace Assembly E - Pages	Min. Brace Anchorage [6]: Form Pour [4] Deck Page D1	Metal [5] Deck Page D2	LONGITUDINAL BRACING REQUIREMENTS: Max. [2] Brace Spacing (ft.)	Brace [3] Reaction P (lbs)	Min. Brace Assembly E - Pages	Min. Brace Anchorage [6]: Form Pour [4] Deck Page D1	Metal [5] Deck Page D2
				1-Way Transverse Brace Pattern (B1.4, B1.5)					**2-Way Trans., Longit. Brace Pattern (B3.0, B3.1, B3.3)**				
1 1/2	10	213	3/8	39	64	R38AAEM306	N1	L1	117	193	R38AAEM306	N2	L2
2	10	321	3/8	43	99	R38AAEM306	N1	L1	130	298	R38AAEM306	N3	L3
2 1/2	10	522	1/2	48	166	R12AAEM306	N2	L2	145	498	R12AAEM406	N5	L5
3	10	754	1/2	53	245	R12AAEM306	N3	L3	160	736	R12AAEM509	N8	L8
4	10	1,337	5/8	58	443	R58AAEM406	N5	L5	175	1,329	R58AAEM506	N14	L14
5	10	1,528	5/8	46	481	R58AAEM406	N5	L5	138	1,443	R58AAEM506	N15	L15
6	10	1,626	5/8	34	472	R58AAEM406	N5	L5	102	1,417	R58AAEM506	N15	L15
8	10	1,969	5/8	66	1,421	R58AAEM506	N15	L15	34	728	R58AAEM509	N8	L8
10	10	2,333	5/8	23	724	R58AAEM509	N8	L8	46	1,448	R58AAEM506	N15	L15
12	10	2,338	5/8	13	533	R58AAEM406	N6	L6	26	1,067	R58AAEM506	N11	L11
14	10	2,458	5/8	10	474	R58AAEM406	N5	L5	20	948	R58AAEM506	N10	L10
				2-Way Transverse Brace Pattern (B2.12, B2.13)					**4-Way Transverse, Longit. Brace Pattern (B4.0, B4.1, B4.3)**				
1 1/2	10	57	3/8	39	32	R38AAEM306	N1	L1	117	96	R38AAEM306	N1	L1
2	10	80	3/8	43	50	R38AAEM306	N1	L1	130	149	R38AAEM306	N2	L2
2 1/2	10	119	1/2	48	83	R12AAEM306	N1	L1	145	249	R12AAEM306	N3	L3
3	10	160	1/2	53	123	R12AAEM306	N2	L2	160	368	R12AAEM406	N4	L4
4	10	263	5/8	58	222	R58AAEM306	N3	L3	175	665	R58AAEM509	N7	L7
5	10	363	5/8	65	339	R58AAEM406	N4	L4	153	798	R58AAEM506	N8	L8
6	10	482	5/8	71	490	R58AAEM406	N5	L5	132	920	R58AAEM506	N10	L10
8	10	746	5/8	66	711	R58AAEM509	N8	L8	34	364	R58AAEM406	N4	L4
10	10	1,093	5/8	30	472	R58AAEM406	N5	L5	90	1,417	R58AAEM506	N15	L15
12	10	1,424	5/8	23	472	R58AAEM406	N5	L5	69	1,416	R58AAEM506	N15	L15
16	10	2,028	5/8	16	467	R58AAEM406	N5	L5	48	1,402	R58AAEM506	N15	L15
				TRANSVERSE, LONGITUDINAL BRACING REQUIREMENTS									
				4-Way Splayed Brace Pattern (B4.13, B4.14)									
1 1/2	10	57	3/8	39	45	R38AAEM306	N1	L1					
2	10	80	3/8	43	70	R38AAEM306	N1	L1					
2 1/2	10	119	1/2	48	117	R12AAEM306	N2	L2					
3	10	160	1/2	53	173	R12AAEM306	N2	L2					
4	10	263	5/8	58	313	R58AAEM409	N4	L4					
5	10	363	5/8	65	480	R58AAEM406	N5	L5					
6	10	482	5/8	71	693	R58AAEM509	N7	L7					
8	10	746	5/8	66	1,005	R58AAEM506	N11	L11					
10	10	1,093	5/8	65	1,447	R58AAEM506	N15	L15					
12	10	1,424	5/8	49	1,422	R58AAEM506	N15	L15					
14	10	1,646	5/8	43	1,442	R58AAEM506	N15	L15					
16	10	2,028	5/8	35	1,446	R58AAEM506	N15	L15					

1. TVL = DL + Fv + ($0.2S_{DS}$/1.4 x Wp). All Terms Are Working Loads.
2. Reductions In Actual Installed Brace Spacing Will Result In An Equal Percentage Reduction In Brace Reaction. As An Option When This Occurs ISAT May Substitute An Alternate Anchorage From Tables D1 or D2 Which Meets or Exceeds The Lowered Brace Reaction.
3. At Max. 50 Degree Brace Inclination.
4. Min. 3,000 psi NWC. Any "N Series" Connection May Be Utilized Having A Numeric Designation Equal To Or Higher Than That Shown.
5. Min. 3,000 psi NWC or LWC. Any "L Series" Connection May Be Utilized Having A Numeric Designation Equal To Or Higher Than That Shown.
6. As An Alternate, Brace Anchorage Connections To Structure May Be Employed Using Any Detail From Structural Connections Section "D" Series Details Where Assembly Design Value Meets Or Exceeds Brace Reaction.
7. For Trade Specific Bracing Installation Notes, Refer To Page 8.1 or 10.1.
8. Utilize Any "G" Series Vertical Support Connection Having A Design Value Equal To Or Greater Than The Corresponding "Rod Total Vertical Load".
9. Based on Water Filled + Insulated Pipe Weight. Refer To Page X Series Weight Charts.
10. Pipe Sizes 12" and Greater Are Sched STD

REGISTERED PROFESSIONAL ENGINEER MARCIN WASOWNIK S 6612 STRUCTURAL STATE OF CALIFORNIA

ISAT
A Division of Tomarco Contractor Specialties

International Seismic Application Technology
14848 Northam Street, La Mirada, CA 90638
877-999-4728 (Toll Free) 714-523-0845 (Fax)
www.isatsb.com

Rev. 2
03/12/19
Page
C11-0.25-45

REVIEWED FOR CODE COMPLIANCE BY ISAT
OPM-0403
By William Staehlin
DATE 01/26/2024
CALIFORNIA BUILDING CODE, 2022

RIGID BRACING REQUIREMENTS [7, 9, 10]

SINGLE HUNG STEEL PIPE (SCHED. 40) — **MAXIMUM SEISMIC DESIGN FORCE = 0.25 G's**

Requires Use of ISAT Seismic Brackets. Use of Any Non-ISAT Bracket Voids Engineering. 2013 California Building Code Compliant

Maximum Pipe Diameter (in.)	Max. Vertical Support Spacing (ft.)	Rod [1] Total Vertical Load (lbs)	Min. [8] Vertical Support Rod Dia. (in.)	TRANSVERSE BRACING REQUIREMENTS: Max. [2] Brace Spacing (ft.)	Brace [3] Reaction P (lbs)	Min. Brace Assembly E - Pages	Min. Brace Anchorage [6] Form Pour [4] Deck Page D1	Min. Brace Anchorage [6] Metal [5] Deck Page D2	LONGITUDINAL BRACING REQUIREMENTS: Max. [2] Brace Spacing (ft.)	Brace [3] Reaction P (lbs)	Min. Brace Assembly E - Pages	Min. Brace Anchorage [6] Form Pour [4] Deck Page D1	Min. Brace Anchorage [6] Metal [5] Deck Page D2
				1-Way Transverse Brace Pattern (B1.4, B1.5)					**2-Way Trans., Longit. Brace Pattern (B3.0, B3.1, B3.3)**				
1 1/2	10	283	3/8	39	83	R38AAEM306	N1	L1	117	248	R38AAEM306	N3	L3
2	10	430	3/8	43	128	R38AAEM306	N2	L2	130	384	R38AAEM406	N4	L4
2 1/2	10	704	1/2	48	214	R12AAEM306	N3	L3	145	641	R12AAEM406	N7	L7
3	10	1,024	1/2	53	315	R12AAEM409	N4	L4	160	946	R12AAEM506	N10	L10
4	10	1,678	5/8	53	516	R58AAEM406	N6	L6	159	1,549	R58AAEM606	N16	L16
5	10	1,795	5/8	55	739	R58AAEM509	N8	L8	110	1,479	R58AAEM606	N15	L15
6	10	1,935	5/8	42	750	R58AAEM509	N8	L8	84	1,500	R58AAEM606	N16	L16
8	10	2,264	5/8	56	1,547	R58AAEM606	N16	L16	30	825	R58AAEM506	N9	L9
10	10	2,269	5/8	15	607	R58AAEM406	N7	L7	30	1,214	R58AAEM506	N13	L13
				2-Way Transverse Brace Pattern (B2.12, B2.13)					**4-Way Transverse, Longit. Brace Pattern (B4.0, B4.1, B4.3)**				
1 1/2	10	57	3/8	39	41	R38AAEM306	N1	L1	117	124	R38AAEM306	N2	L2
2	10	80	3/8	43	64	R38AAEM306	N1	L1	130	192	R38AAEM306	N2	L2
2 1/2	10	119	1/2	48	107	R12AAEM306	N2	L2	145	320	R12AAEM409	N4	L4
3	10	160	1/2	53	158	R12AAEM306	N2	L2	160	473	R12AAEM406	N5	L5
4	10	263	5/8	58	285	R58AAEM306	N3	L3	175	854	R58AAEM506	N9	L9
5	10	363	5/8	65	436	R58AAEM406	N5	L5	134	903	R58AAEM506	N10	L10
6	10	482	5/8	71	630	R58AAEM406	N7	L7	116	1,040	R58AAEM506	N11	L11
8	10	746	5/8	58	805	R58AAEM506	N9	L9	30	413	R58AAEM406	N5	L5
10	10	1,093	5/8	45	911	R58AAEM506	N10	L10	103	2,093	R58AAB2P09	N21	L21
12	10	1,424	5/8	36	950	R58AAEM506	N10	L10	79	2,092	R58AAB2P09	N21	L21
16	10	2,028	5/8	27	1,014	R58AAEM506	N11	L11	57	2,130	R58AAB2P09	N22	L22
				TRANSVERSE, LONGITUDINAL BRACING REQUIREMENTS									
				4-Way Splayed Brace Pattern (B4.13, B4.14)									
1 1/2	10	57	3/8	39	58	R38AAEM306	N1	L1					
2	10	80	3/8	43	90	R38AAEM306	N1	L1					
2 1/2	10	119	1/2	48	151	R12AAEM306	N2	L2					
3	10	160	1/2	53	223	R12AAEM306	N3	L3					
4	10	263	5/8	58	403	R58AAEM406	N5	L5					
5	10	363	5/8	65	617	R58AAEM406	N7	L7					
6	10	482	5/8	71	891	R58AAEM506	N9	L9					
8	10	746	5/8	30	583	R58AAEM406	N6	L6					
10	10	1,093	5/8	65	1,867	R58AAEM606	N19	L19					
12	10	1,424	5/8	50	1,866	R58AAEM606	N19	L19					
14	10	1,646	5/8	44	1,887	R58AAEM606	N19	L19					
16	10	2,028	5/8	36	1,900	R58AAEM606	N20	L20					

1. TVL = DL + Fv + ($0.2S_{DS}$/1.4 x Wp). All Terms Are Working Loads.
2. Reductions In Actual Installed Brace Spacing Will Result In An Equal Percentage Reduction In Brace Reaction. As An Option When This Occurs ISAT May Substitute An Alternate Anchorage From Tables D1 or D2 Which Meets or Exceeds The Lowered Brace Reaction.
3. At Max. 60 Degree Brace Inclination.
4. Min. 3,000 psi NWC. Any "N Series" Connection May Be Utilized Having A Numeric Designation Equal To Or Higher Than That Shown.
5. Min. 3,000 psi NWC or LWC. Any "L Series" Connection May Be Utilized Having A Numeric Designation Equal To Or Higher Than That Shown.
6. As An Alternate, Brace Anchorage Connections To Structure May Be Employed Using Any Detail From Structural Connections Section "D" Series Details Where Assembly Design Value Meets Or Exceeds Brace Reaction.
7. For Trade Specific Bracing Installation Notes, Refer To Page 8.1 or 10.1.
8. Utilize Any "G" Series Vertical Support Connection Having A Design Value Equal To Or Greater Than The Corresponding "Rod Total Vertical Load".
9. Based on Water Filled + Insulated Pipe Weight. Refer To Page X Series Weight Charts.
10. Pipe Sizes 12" and Greater Are Sched STD

REGISTERED PROFESSIONAL ENGINEER — NARCIN WASAZNIK — S 6612 — STRUCTURAL — STATE OF CALIFORNIA

ISAT
A Division of Tomarco Contractor Specialties
International Seismic Application Technology
14848 Northam Street, La Mirada, CA 90638
877-999-4728 (Toll Free) 714-523-0845 (Fax)
www.isatsb.com

Rev. 2
03/12/19
Page
C11-0.25-60

REVIEWED FOR CODE COMPLIANCE BY HCAI
OPM-0403
DATE 01/26/2024
BY William Staehlin
CALIFORNIA BUILDING CODE, 2022

RIGID BRACING REQUIREMENTS [7, 9, 10]

SINGLE HUNG STEEL PIPE (SCHED. 40) — **MAXIMUM SEISMIC DESIGN FORCE = 0.50 G's**

Requires Use of ISAT Seismic Brackets. Use of Any Non-ISAT Bracket Voids Engineering. 2013 California Building Code Compliant

Maximum Pipe Diameter (in.)	Max. Vertical Support Spacing (ft.)	Rod [1] Total Vertical Load (lbs)	Min. [8] Vertical Support Rod Dia. (in.)	TRANSVERSE BRACING REQUIREMENTS: Max. [2] Brace Spacing (ft.)	Brace [3] Reaction P (lbs)	Min. Brace Assembly E - Pages	Min. Brace Anchorage [6]: Form Pour [4] Deck Page D1	Min. Brace Anchorage [6]: Metal [5] Deck Page D2	LONGITUDINAL BRACING REQUIREMENTS: Max. [2] Brace Spacing (ft.)	Brace [3] Reaction P (lbs)	Min. Brace Assembly E - Pages	Min. Brace Anchorage [6]: Form Pour [4] Deck Page D1	Min. Brace Anchorage [6]: Metal [5] Deck Page D2
				1-Way Transverse Brace Pattern (B1.4, B1.5)					**2-Way Trans., Longit. Brace Pattern (B3.0, B3.1, B3.3)**				
1 1/2	10	184	3/8	33	80	R38AAEM306	N1	L1	98	240	R38AAEM306	N3	L3
2	10	276	3/8	37	124	R38AAEM306	N2	L2	110	373	R38AAEM406	N4	L4
2 1/2	10	447	1/2	41	207	R12AAEM306	N3	L3	122	622	R12AAEM406	N7	L7
3	10	644	1/2	45	306	R12AAEM409	N4	L4	134	919	R12AAEM506	N10	L10
4	10	945	5/8	48	535	R58AAEM406	N6	L6	112	1,255	R58AAEM506	N13	L13
5	10	1,079	5/8	52	803	R58AAEM506	N9	L9	76	1,185	R58AAEM506	N12	L12
6	10	1,374	5/8	56	1,148	R58AAEM506	N12	L12	66	1,365	R58AAEM506	N14	L14
8	10	1,338	5/8	33	1,055	R58AAEM506	N11	L11	17	540	R58AAEM406	N6	L6
10	10	1,877	5/8	15	701	R58AAEM509	N8	L8	30	1,402	R58AAEM506	N15	L15
12	10	2,173	5/8	11	670	R58AAEM509	N7	L7	22	1,340	R58AAEM506	N14	L14
				2-Way Transverse Brace Pattern (B2.12, B2.13)					**4-Way Transverse, Longit. Brace Pattern (B4.0, B4.1, B4.3)**				
10	10	1,093	5/8	20	467	R58AAEM406	N5	L5	60	1,402	R58AAEM506	N15	L15
12	10	1,424	5/8	15	457	R58AAEM406	N5	L5	45	1,370	R58AAEM506	N14	L14
16	10	2,028	5/8	11	477	R58AAEM406	N5	L5	33	1,431	R58AAEM506	N15	L15
				TRANSVERSE, LONGITUDINAL BRACING REQUIREMENTS									
				4-Way Splayed Brace Pattern (B4.13, B4.14)									
1 1/2	10	57	3/8	33	57	R38AAEM306	N1	L1					
2	10	80	3/8	37	88	R38AAEM306	N1	L1					
2 1/2	10	119	1/2	41	147	R12AAEM306	N2	L2					
3	10	160	1/2	45	217	R12AAEM306	N3	L3					
4	10	263	5/8	48	379	R58AAEM406	N4	L4					
5	10	363	5/8	52	567	R58AAEM406	N6	L6					
6	10	482	5/8	56	812	R58AAEM506	N9	L9					
8	10	746	5/8	33	746	R58AAEM509	N8	L8					
10	10	1,093	5/8	38	1,269	R58AAEM506	N13	L13					
12	10	1,424	5/8	29	1,269	R58AAEM506	N13	L13					
14	10	1,646	5/8	26	1,283	R58AAEM506	N13	L13					
16	10	2,028	5/8	21	1,292	R58AAEM506	N13	L13					

1. TVL = DL + Fv + ($0.2S_{DS}$/1.4 x Wp). All Terms Are Working Loads.
2. Reductions In Actual Installed Brace Spacing Will Result In An Equal Percentage Reduction In Brace Reaction. As An Option When This Occurs ISAT May Substitute An Alternate Anchorage From Tables D1 or D2 Which Meets or Exceeds The Lowered Brace Reaction.
3. At Max. 30 Degree Brace Inclination.
4. Min. 3,000 psi NWC. Any "N Series" Connection May Be Utilized Having A Numeric Designation Equal To Or Higher Than That Shown.
5. Min. 3,000 psi NWC or LWC. Any "L Series" Connection May Be Utilized Having A Numeric Designation Equal To Or Higher Than That Shown.
6. As An Alternate, Brace Anchorage Connections To Structure May Be Employed Using Any Detail From Structural Connections Section "D" Series Details Where Assembly Design Value Meets Or Exceeds Brace Reaction.
7. For Trade Specific Bracing Installation Notes, Refer To Page 8.1 or 10.1.
8. Utilize Any "G" Series Vertical Support Connection Having A Design Value Equal To Or Greater Than The Corresponding "Rod Total Vertical Load".
9. Based on Water Filled + Insulated Pipe Weight. Refer To Page X Series Weight Charts.
10. Pipe Sizes 12" and Greater Are Sched STD

REGISTERED PROFESSIONAL ENGINEER MARCIN WASZAK S 6612 STRUCTURAL STATE OF CALIFORNIA

ISAT
A Division of Tomarco Contractor Specialties

International Seismic Application Technology
14848 Northam Street, La Mirada, CA 90638
877-999-4728 (Toll Free) 714-523-0845 (Fax)
www.isatsb.com

Rev. 2
03/12/19
Page
C11-0.5-30

REVIEWED FOR CODE COMPLIANCE BY OPM-0403 BY William Staehlin DATE 01/26/2024 CALIFORNIA BUILDING CODE 2022

RIGID BRACING REQUIREMENTS [7, 9, 10]

SINGLE HUNG STEEL PIPE (SCHED. 40) — **MAXIMUM SEISMIC DESIGN FORCE = 0.50 G's**

Requires Use of ISAT Seismic Brackets. Use of Any Non-ISAT Bracket Voids Engineering. 2013 California Building Code Compliant

Maximum Pipe Diameter (in.)	Max. Vertical Support Spacing (ft.)	Rod [1] Total Vertical Load (lbs)	Min. [8] Vertical Support Rod Dia. (in.)	TRANSVERSE BRACING REQUIREMENTS: Max. [2] Brace Spacing (ft.)	Brace [3] Reaction P (lbs)	Min. Brace Assembly E - Pages	Min. Brace Anchorage [6]: Form Pour [4] Deck Page D1	Metal [5] Deck Page D2	LONGITUDINAL BRACING REQUIREMENTS: Max. [2] Brace Spacing (ft.)	Brace [3] Reaction P (lbs)	Min. Brace Assembly E - Pages	Min. Brace Anchorage [6]: Form Pour [4] Deck Page D1	Metal [5] Deck Page D2
				1-Way Transverse Brace Pattern (B1.4, B1.5)					**2-Way Trans., Longit. Brace Pattern (B3.0, B3.1, B3.3)**				
1 1/2	10	319	3/8	33	108	R38AAEM306	N2	L2	98	324	R38AAEM409	N4	L4
2	10	485	3/8	37	167	R38AAEM306	N2	L2	110	502	R38AAEM406	N6	L6
2 1/2	10	796	1/2	41	279	R12AAEM306	N3	L3	122	838	R12AAEM506	N9	L9
3	10	1,160	1/2	45	413	R12AAEM406	N5	L5	134	1,238	R12AAEM506	N13	L13
4	10	1,671	5/8	48	721	R58AAEM509	N8	L8	111	1,690	R58AAEM606	N17	L17
5	10	1,807	5/8	48	1,004	R58AAEM506	N11	L11	76	1,595	R58AAEM606	N16	L16
6	10	1,896	5/8	21	583	R58AAEM406	N6	L6	63	1,750	R58AAEM606	N18	L18
8	10	1,967	5/8	33	1,420	R58AAEM506	N15	L15	17	725	R58AAEM509	N8	L8
				2-Way Transverse Brace Pattern (B2.12, B2.13)					**4-Way Transverse, Longit. Brace Pattern (B4.0, B4.1, B4.3)**				
5	10	363	5/8	52	541	R58AAEM406	N6	L6	76	798	R58AAEM506	N8	L8
6	10	482	5/8	56	773	R58AAEM509	N8	L8	66	918	R58AAEM506	N10	L10
8	10	746	5/8	33	710	R58AAEM509	N8	L8	17	363	R58AAEM406	N4	L4
10	10	1,093	5/8	33	1,050	R58AAEM506	N11	L11	57	1,800	R58AAEM606	N18	L18
12	10	1,424	5/8	26	1,050	R58AAEM506	N11	L11	44	1,799	R58AAEM606	N18	L18
16	10	2,028	5/8	18	1,069	R58AAEM506	N11	L11	31	1,832	R58AAEM606	N19	L19
				TRANSVERSE, LONGITUDINAL BRACING REQUIREMENTS									
				4-Way Splayed Brace Pattern (B4.13, B4.14)									
1 1/2	10	57	3/8	33	76	R38AAEM306	N1	L1					
2	10	80	3/8	37	118	R38AAEM306	N2	L2					
2 1/2	10	119	1/2	41	198	R12AAEM306	N2	L2					
3	10	160	1/2	45	292	R12AAEM306	N3	L3					
4	10	263	5/8	48	510	R58AAEM406	N6	L6					
5	10	363	5/8	52	765	R58AAEM509	N8	L8					
6	10	482	5/8	56	1,094	R58AAEM506	N11	L11					
8	10	746	5/8	17	513	R58AAEM406	N6	L6					
10	10	1,093	5/8	33	1,485	R58AAEM606	N15	L15					
12	10	1,424	5/8	26	1,485	R58AAEM606	N15	L15					
14	10	1,646	5/8	22	1,501	R58AAEM606	N16	L16					
16	10	2,028	5/8	18	1,512	R58AAEM606	N16	L16					

1. TVL = DL + Fv + ($0.2S_{DS}$/1.4 x Wp). All Terms Are Working Loads.
2. Reductions In Actual Installed Brace Spacing Will Result In An Equal Percentage Reduction In Brace Reaction. As An Option When This Occurs ISAT May Substitute An Alternate Anchorage From Tables D1 or D2 Which Meets or Exceeds The Lowered Brace Reaction.
3. At Max. 50 Degree Brace Inclination.
4. Min. 3,000 psi NWC. Any "N Series" Connection May Be Utilized Having A Numeric Designation Equal To Or Higher Than That Shown.
5. Min. 3,000 psi NWC or LWC. Any "L Series" Connection May Be Utilized Having A Numeric Designation Equal To Or Higher Than That Shown.
6. As An Alternate, Brace Anchorage Connections To Structure May Be Employed Using Any Detail From Structural Connections Section "D" Series Details Where Assembly Design Value Meets Or Exceeds Brace Reaction.
7. For Trade Specific Bracing Installation Notes, Refer To Page 8.1 or 10.1.
8. Utilize Any "G" Series Vertical Support Connection Having A Design Value Equal To Or Greater Than The Corresponding "Rod Total Vertical Load".
9. Based on Water Filled + Insulated Pipe Weight. Refer To Page X Series Weight Charts.
10. Pipe Sizes 12" and Greater Are Sched STD

REGISTERED PROFESSIONAL ENGINEER MARCIN WASAZNIK S-6612 STRUCTURAL STATE OF CALIFORNIA

ISAT
A Division of Tomarco Contractor Specialties

International Seismic Application Technology
14848 Northam Street, La Mirada, CA 90638
877-999-4728 (Toll Free) 714-523-0845 (Fax)
www.isatsb.com

Rev. 2
03/12/19
Page
C11-0.5-45

REVIEWED FOR CODE COMPLIANCE
BY William Staehlin
DATE 01/26/2024
CALIFORNIA BUILDING CODE, 2022

RIGID BRACING REQUIREMENTS [7, 9, 10]

SINGLE HUNG STEEL PIPE (SCHED. 40) — **MAXIMUM SEISMIC DESIGN FORCE = 0.50 G's**

Requires Use of ISAT Seismic Brackets. Use of Any Non-ISAT Bracket Voids Engineering. 2013 California Building Code Compliant

Maximum Pipe Diameter (in.)	Max. Vertical Support Spacing (ft.)	Rod [1] Total Vertical Load (lbs)	Min. [8] Vertical Support Rod Dia. (in.)	TRANSVERSE BRACING REQUIREMENTS: Max. [2] Brace Spacing (ft.)	Brace [3] Reaction P (lbs)	Min. Brace Assembly E - Pages	Min. Brace Anchorage [6] Form Pour [4] Deck Page D1	Min. Brace Anchorage [6] Metal [5] Deck Page D2	LONGITUDINAL BRACING REQUIREMENTS: Max. [2] Brace Spacing (ft.)	Brace [3] Reaction P (lbs)	Min. Brace Assembly E - Pages	Min. Brace Anchorage [6] Form Pour [4] Deck Page D1	Min. Brace Anchorage [6] Metal [5] Deck Page D2
				1-Way Transverse Brace Pattern (B1.4, B1.5)					**2-Way Trans., Longit. Brace Pattern (B3.0, B3.1, B3.3)**				
1 1/2	10	437	3/8	33	139	R38AAEM306	N2	L2	98	417	R38AAEM406	N5	L5
2	10	467	3/8	34	200	R38AAEM306	N3	L3	68	401	R38AAEM406	N5	L5
2 1/2	10	1,040	1/2	41	359	R12AAEM406	N4	L4	113	1,000	R12AAEM506	N10	L10
3	10	1,171	1/2	44	522	R12AAEM406	N6	L6	88	1,044	R12AAEM506	N11	L11
4	10	1,660	5/8	37	721	R58AAEM509	N8	L8	74	1,442	R58AAEM506	N15	L15
5	10	1,769	5/8	27	726	R58AAEM509	N8	L8	54	1,452	R58AAEM506	N15	L15
6	10	1,935	5/8	21	750	R58AAEM509	N8	L8	42	1,500	R58AAEM606	N16	L16
8	10	2,264	5/8	28	1,547	R58AAEM606	N16	L16	15	825	R58AAEM506	N9	L9
				2-Way Transverse Brace Pattern (B2.12, B2.13)					**4-Way Transverse, Longit. Brace Pattern (B4.0, B4.1, B4.3)**				
1 1/2	10	57	3/8	33	69	R38AAEM306	N1	L1	98	208	R38AAEM306	N3	L3
2	10	80	3/8	37	108	R38AAEM306	N2	L2	110	323	R38AAEM409	N4	L4
2 1/2	10	119	1/2	41	180	R12AAEM306	N2	L2	113	500	R12AAEM406	N5	L5
3	10	160	1/2	45	265	R12AAEM306	N3	L3	134	796	R12AAEM506	N8	L8
4	10	263	5/8	48	464	R58AAEM406	N5	L5	98	958	R58AAEM506	N10	L10
5	10	363	5/8	52	695	R58AAEM509	N7	L7	67	903	R58AAEM506	N10	L10
6	10	482	5/8	47	839	R58AAEM506	N9	L9	58	1,040	R58AAEM506	N11	L11
8	10	746	5/8	29	805	R58AAEM506	N9	L9	15	413	R58AAEM406	N5	L5
10	10	1,093	5/8	22	890	R58AAEM506	N9	L9	52	2,093	R58AAB2P09	N21	L21
12	10	1,424	5/8	18	950	R58AAEM506	N10	L10	40	2,092	R58AAB2P09	N21	L21
16	10	2,028	5/8	13	976	R58AAEM506	N10	L10	28	2,130	R58AAB2P09	N22	L22
				TRANSVERSE, LONGITUDINAL BRACING REQUIREMENTS									
				4-Way Splayed Brace Pattern (B4.13, B4.14)									
1 1/2	10	57	3/8	33	98	R38AAEM306	N1	L1					
2	10	80	3/8	37	152	R38AAEM306	N2	L2					
2 1/2	10	119	1/2	41	254	R12AAEM306	N3	L3					
3	10	160	1/2	45	375	R12AAEM406	N4	L4					
4	10	263	5/8	48	656	R58AAEM406	N7	L7					
5	10	363	5/8	52	983	R58AAEM506	N10	L10					
6	10	482	5/8	52	1,308	R58AAEM506	N14	L14					
8	10	746	5/8	29	1,138	R58AAEM506	N12	L12					
10	10	1,093	5/8	33	1,867	R58AAEM606	N19	L19					
12	10	1,424	5/8	25	1,866	R58AAEM606	N19	L19					
14	10	1,646	5/8	22	1,887	R58AAEM606	N19	L19					
16	10	2,028	5/8	18	1,900	R58AAEM606	N20	L20					

1. TVL = DL + Fv + ($0.2S_{DS}$/1.4 x Wp). All Terms Are Working Loads.
2. Reductions In Actual Installed Brace Spacing Will Result In An Equal Percentage Reduction In Brace Reaction. As An Option When This Occurs ISAT May Substitute An Alternate Anchorage From Tables D1 or D2 Which Meets or Exceeds The Lowered Brace Reaction.
3. At Max. 60 Degree Brace Inclination.
4. Min. 3,000 psi NWC. Any "N Series" Connection May Be Utilized Having A Numeric Designation Equal To Or Higher Than That Shown.
5. Min. 3,000 psi NWC or LWC. Any "L Series" Connection May Be Utilized Having A Numeric Designation Equal To Or Higher Than That Shown.
6. As An Alternate, Brace Anchorage Connections To Structure May Be Employed Using Any Detail From Structural Connections Section "D" Series Details Where Assembly Design Value Meets Or Exceeds Brace Reaction.
7. For Trade Specific Bracing Installation Notes, Refer To Page 8.1 or 10.1.
8. Utilize Any "G" Series Vertical Support Connection Having A Design Value Equal To Or Greater Than The Corresponding "Rod Total Vertical Load".
9. Based on Water Filled + Insulated Pipe Weight. Refer To Page X Series Weight Charts.
10. Pipe Sizes 12" and Greater Are Sched STD

REGISTERED PROFESSIONAL ENGINEER MARCIN WASOWNIK 5-6612 STRUCTURAL STATE OF CALIFORNIA

ISAT
A Division of Tomarco Contractor Specialties

International Seismic Application Technology
14848 Northam Street, La Mirada, CA 90638
877-999-4728 (Toll Free) 714-523-0845 (Fax)
www.isatsb.com

Rev. 2
03/12/19
Page
C11-0.5-60

RIGID BRACING REQUIREMENTS [7, 9, 10]

SINGLE HUNG STEEL PIPE (SCHED. 40) — **MAXIMUM SEISMIC DESIGN FORCE = 0.75 G's**

Requires Use of ISAT Seismic Brackets. Use of Any Non-ISAT Bracket Voids Engineering. 2013 California Building Code Compliant

Maximum Pipe Diameter (in.)	Max. Vertical Support Spacing (ft.)	Rod [1] Total Vertical Load (lbs)	Min. [8] Vertical Support Rod Dia. (in.)	TRANSVERSE BRACING REQUIREMENTS: Max. [2] Brace Spacing (ft.)	Brace [3] Reaction P (lbs)	Min. Brace Assembly E - Pages	Min. Brace Anchorage [6]: Form Pour [4] Deck Page D1	Min. Brace Anchorage [6]: Metal [5] Deck Page D2	LONGITUDINAL BRACING REQUIREMENTS: Max. [2] Brace Spacing (ft.)	Brace [3] Reaction P (lbs)	Min. Brace Assembly E - Pages	Min. Brace Anchorage [6]: Form Pour [4] Deck Page D1	Min. Brace Anchorage [6]: Metal [5] Deck Page D2
				1-Way Transverse Brace Pattern (B1.4, B1.5)					**2-Way Trans., Longit. Brace Pattern (B3.0, B3.1, B3.3)**				
1 1/2	10	214	3/8	27	99	R38AAEM306	N1	L1	81	297	R38AAEM306	N3	L3
2	10	325	3/8	30	155	R38AAEM306	N2	L2	91	465	R38AAEM406	N5	L5
2 1/2	10	473	1/2	35	264	R12AAEM306	N3	L3	86	655	R12AAEM406	N7	L7
3	10	729	1/2	38	387	R12AAEM406	N4	L4	104	1,070	R12AAEM506	N11	L11
4	10	971	5/8	39	656	R58AAEM406	N7	L7	74	1,255	R58AAEM506	N13	L13
5	10	1,133	5/8	42	983	R58AAEM506	N10	L10	51	1,185	R58AAEM506	N12	L12
6	10	1,396	5/8	39	1,215	R58AAEM506	N13	L13	44	1,365	R58AAEM506	N14	L14
8	10	1,338	5/8	22	1,055	R58AAEM506	N11	L11	11	540	R58AAEM406	N6	L6
10	10	1,877	5/8	10	701	R58AAEM509	N8	L8	20	1,402	R58AAEM506	N15	L15
				2-Way Transverse Brace Pattern (B2.12, B2.13)					**4-Way Transverse, Longit. Brace Pattern (B4.0, B4.1, B4.3)**				
1 1/2	10	57	3/8	27	50	R38AAEM306	N1	L1	81	149	R38AAEM306	N2	L2
2	10	80	3/8	30	78	R38AAEM306	N1	L1	91	233	R38AAEM306	N3	L3
2 1/2	10	119	1/2	35	132	R12AAEM306	N2	L2	86	328	R12AAEM409	N4	L4
3	10	160	1/2	38	193	R12AAEM306	N2	L2	104	535	R12AAEM406	N6	L6
4	10	263	5/8	39	328	R58AAEM409	N4	L4	74	628	R58AAEM406	N7	L7
5	10	363	5/8	42	491	R58AAEM406	N5	L5	51	593	R58AAEM406	N6	L6
6	10	482	5/8	39	608	R58AAEM406	N7	L7	44	683	R58AAEM509	N7	L7
8	10	746	5/8	22	528	R58AAEM406	N6	L6	11	270	R58AAEM306	N3	L3
10	10	1,093	5/8	20	701	R58AAEM509	N8	L8	40	1,402	R58AAEM506	N15	L15
12	10	1,424	5/8	10	457	R58AAEM406	N5	L5	30	1,370	R58AAEM506	N14	L14
16	10	2,028	5/8	10	650	R58AAEM406	N7	L7	20	1,301	R58AAEM506	N14	L14
				TRANSVERSE, LONGITUDINAL BRACING REQUIREMENTS									
				4-Way Splayed Brace Pattern (B4.13, B4.14)									
1 1/2	10	57	3/8	27	70	R38AAEM306	N1	L1					
2	10	80	3/8	30	110	R38AAEM306	N2	L2					
2 1/2	10	119	1/2	35	187	R12AAEM306	N2	L2					
3	10	160	1/2	38	273	R12AAEM306	N3	L3					
4	10	263	5/8	39	464	R58AAEM406	N5	L5					
5	10	363	5/8	42	695	R58AAEM509	N7	L7					
6	10	482	5/8	39	859	R58AAEM506	N9	L9					
8	10	746	5/8	22	746	R58AAEM509	N8	L8					
10	10	1,093	5/8	26	1,269	R58AAEM506	N13	L13					
12	10	1,424	5/8	20	1,269	R58AAEM506	N13	L13					
14	10	1,646	5/8	17	1,283	R58AAEM506	N13	L13					
16	10	2,028	5/8	14	1,292	R58AAEM506	N13	L13					

1. TVL = DL + Fv + ($0.2S_{DS}$/1.4 x Wp). All Terms Are Working Loads.
2. Reductions In Actual Installed Brace Spacing Will Result In An Equal Percentage Reduction In Brace Reaction. As An Option When This Occurs ISAT May Substitute An Alternate Anchorage From Tables D1 or D2 Which Meets or Exceeds The Lowered Brace Reaction.
3. At Max. 30 Degree Brace Inclination.
4. Min. 3,000 psi NWC. Any "N Series" Connection May Be Utilized Having A Numeric Designation Equal To Or Higher Than That Shown.
5. Min. 3,000 psi NWC or LWC. Any "L Series" Connection May Be Utilized Having A Numeric Designation Equal To Or Higher Than That Shown.
6. As An Alternate, Brace Anchorage Connections To Structure May Be Employed Using Any Detail From Structural Connections Section "D" Series Details Where Assembly Design Value Meets Or Exceeds Brace Reaction.
7. For Trade Specific Bracing Installation Notes, Refer To Page 8.1 or 10.1.
8. Utilize Any "G" Series Vertical Support Connection Having A Design Value Equal To Or Greater Than The Corresponding "Rod Total Vertical Load".
9. Based on Water Filled + Insulated Pipe Weight. Refer To Page X Series Weight Charts.
10. Pipe Sizes 12" and Greater Are Sched STD

REGISTERED PROFESSIONAL ENGINEER MARCIN WASAZNIK S-6612 STRUCTURAL STATE OF CALIFORNIA

ISAT
A Division of Tomarco Contractor Specialties
International Seismic Application Technology
14848 Northam Street, La Mirada, CA 90638
877-999-4728 (Toll Free) 714-523-0845 (Fax)
www.isatsb.com

Rev. 2
03/12/19
Page
C11-0.75-30

REVIEWED FOR CODE COMPLIANCE
OPM-0403
BY William Staehlin
DATE 01/26/2024
UNIFORM BUILDING CODE, 2022

RIGID BRACING REQUIREMENTS [7, 9, 10]

SINGLE HUNG STEEL PIPE (SCHED. 40) — **MAXIMUM SEISMIC DESIGN FORCE = 0.75 G's**

Requires Use of ISAT Seismic Brackets. Use of Any Non-ISAT Bracket Voids Engineering. 2013 California Building Code Compliant

Maximum Pipe Diameter (in.)	Max. Vertical Support Spacing (ft.)	Rod [1] Total Vertical Load (lbs)	Min. [8] Vertical Support Rod Dia. (in.)	TRANSVERSE BRACING REQUIREMENTS: Max. [2] Brace Spacing (ft.)	Brace [3] Reaction P (lbs)	Min. Brace Assembly E - Pages	Min. Brace Anchorage [6]: Form Pour [4] Deck Page D1	Metal [5] Deck Page D2	LONGITUDINAL BRACING REQUIREMENTS: Max. [2] Brace Spacing (ft.)	Brace [3] Reaction P (lbs)	Min. Brace Assembly E - Pages	Min. Brace Anchorage [6]: Form Pour [4] Deck Page D1	Metal [5] Deck Page D2
				1-Way Transverse Brace Pattern (B1.4, B1.5)					**2-Way Trans., Longit. Brace Pattern (B3.0, B3.1, B3.3)**				
1 1/2	10	381	3/8	27	134	R38AAEM306	N2	L2	81	401	R38AAEM406	N5	L5
2	10	438	3/8	30	209	R38AAEM306	N3	L3	61	418	R38AAEM406	N5	L5
2 1/2	10	847	1/2	35	356	R12AAEM406	N4	L4	85	880	R12AAEM506	N9	L9
3	10	1,053	1/2	38	521	R12AAEM406	N6	L6	75	1,042	R12AAEM506	N11	L11
4	10	1,665	5/8	36	819	R58AAEM506	N9	L9	72	1,637	R58AAEM606	N17	L17
5	10	1,807	5/8	32	1,004	R58AAEM506	N11	L11	51	1,595	R58AAEM606	N16	L16
6	10	1,896	5/8	14	583	R58AAEM406	N6	L6	42	1,750	R58AAEM606	N18	L18
8	10	1,523	5/8	11	709	R58AAEM509	N8	L8	11	725	R58AAEM509	N8	L8
				2-Way Transverse Brace Pattern (B2.12, B2.13)					**4-Way Transverse, Longit. Brace Pattern (B4.0, B4.1, B4.3)**				
1 1/2	10	57	3/8	27	67	R38AAEM306	N1	L1	81	200	R38AAEM306	N3	L3
2	10	80	3/8	30	104	R38AAEM306	N2	L2	91	313	R38AAEM409	N4	L4
2 1/2	10	119	1/2	35	178	R12AAEM306	N2	L2	85	440	R12AAEM406	N5	L5
3	10	160	1/2	38	261	R12AAEM306	N3	L3	104	720	R12AAEM509	N8	L8
4	10	263	5/8	39	442	R58AAEM406	N5	L5	74	845	R58AAEM506	N9	L9
5	10	363	5/8	42	662	R58AAEM509	N7	L7	51	798	R58AAEM506	N8	L8
6	10	482	5/8	39	818	R58AAEM506	N9	L9	44	918	R58AAEM506	N10	L10
8	10	746	5/8	22	710	R58AAEM509	N8	L8	11	363	R58AAEM406	N4	L4
10	10	1,093	5/8	21	992	R58AAEM506	N10	L10	38	1,800	R58AAEM606	N18	L18
12	10	1,424	5/8	17	1,050	R58AAEM506	N11	L11	29	1,799	R58AAEM606	N18	L18
16	10	2,028	5/8	12	1,069	R58AAEM506	N11	L11	21	1,832	R58AAEM606	N19	L19
				TRANSVERSE, LONGITUDINAL BRACING REQUIREMENTS									
				4-Way Splayed Brace Pattern (B4.13, B4.14)									
1 1/2	10	57	3/8	27	94	R38AAEM306	N1	L1					
2	10	80	3/8	30	148	R38AAEM306	N2	L2					
2 1/2	10	119	1/2	35	252	R12AAEM306	N3	L3					
3	10	160	1/2	38	368	R12AAEM406	N4	L4					
4	10	263	5/8	39	625	R58AAEM406	N7	L7					
5	10	363	5/8	42	936	R58AAEM506	N10	L10					
6	10	482	5/8	39	1,156	R58AAEM506	N12	L12					
8	10	746	5/8	22	1,004	R58AAEM506	N11	L11					
10	10	1,093	5/8	22	1,485	R58AAEM606	N15	L15					
12	10	1,424	5/8	17	1,485	R58AAEM606	N15	L15					
14	10	1,646	5/8	15	1,501	R58AAEM606	N16	L16					
16	10	2,028	5/8	12	1,512	R58AAEM606	N16	L16					

1. TVL = DL + Fv + ($0.2S_{DS}$/1.4 x Wp). All Terms Are Working Loads.
2. Reductions In Actual Installed Brace Spacing Will Result In An Equal Percentage Reduction In Brace Reaction. As An Option When This Occurs ISAT May Substitute An Alternate Anchorage From Tables D1 or D2 Which Meets or Exceeds The Lowered Brace Reaction.
3. At Max. 50 Degree Brace Inclination.
4. Min. 3,000 psi NWC. Any "N Series" Connection May Be Utilized Having A Numeric Designation Equal To Or Higher Than That Shown.
5. Min. 3,000 psi NWC or LWC. Any "L Series" Connection May Be Utilized Having A Numeric Designation Equal To Or Higher Than That Shown.
6. As An Alternate, Brace Anchorage Connections To Structure May Be Employed Using Any Detail From Structural Connections Section "D" Series Details Where Assembly Design Value Meets Or Exceeds Brace Reaction.
7. For Trade Specific Bracing Installation Notes, Refer To Page 8.1 or 10.1.
8. Utilize Any "G" Series Vertical Support Connection Having A Design Value Equal To Or Greater Than The Corresponding "Rod Total Vertical Load".
9. Based on Water Filled + Insulated Pipe Weight. Refer To Page X Series Weight Charts.
10. Pipe Sizes 12" and Greater Are Sched STD

REGISTERED PROFESSIONAL ENGINEER MARCIN WASAZNIK S-6612 STRUCTURAL STATE OF CALIFORNIA

ISAT
A Division of Tomarco Contractor Specialties
International Seismic Application Technology
14848 Northam Street, La Mirada, CA 90638
877-999-4728 (Toll Free) 714-523-0845 (Fax)
www.isatsb.com

Rev. 2
03/12/19
Page
C11-0.75-45

RIGID BRACING REQUIREMENTS [7, 9, 10]

SINGLE HUNG STEEL PIPE (SCHED. 40) — **MAXIMUM SEISMIC DESIGN FORCE = 0.75 G's**

Requires Use of ISAT Seismic Brackets. Use of Any Non-ISAT Bracket Voids Engineering. 2013 California Building Code Compliant

Maximum Pipe Diameter (in.)	Max. Vertical Support Spacing (ft.)	Rod [1] Total Vertical Load (lbs)	Min. [8] Vertical Support Rod Dia. (in.)	TRANSVERSE BRACING REQUIREMENTS: Max. [2] Brace Spacing (ft.)	Brace [3] Reaction P (lbs)	Min. Brace Assembly E - Pages	Min. Brace Anchorage [6]: Form Pour [4] Deck Page D1	Min. Brace Anchorage [6]: Metal [5] Deck Page D2	LONGITUDINAL BRACING REQUIREMENTS: Max. [2] Brace Spacing (ft.)	Brace [3] Reaction P (lbs)	Min. Brace Assembly E - Pages	Min. Brace Anchorage [6]: Form Pour [4] Deck Page D1	Min. Brace Anchorage [6]: Metal [5] Deck Page D2
				1-Way Transverse Brace Pattern (B1.4, B1.5)					**2-Way Trans., Longit. Brace Pattern (B3.0, B3.1, B3.3)**				
1 1/2	10	390	3/8	27	172	R38AAEM306	N2	L2	54	343	R38AAEM406	N4	L4
2	10	473	3/8	23	203	R38AAEM306	N3	L3	46	406	R38AAEM406	N5	L5
2 1/2	10	1,072	1/2	35	458	R12AAEM406	N5	L5	75	1,000	R12AAEM506	N10	L10
3	10	1,135	1/2	20	356	R12AAEM406	N4	L4	60	1,067	R12AAEM506	N11	L11
4	10	1,678	5/8	25	731	R58AAEM509	N8	L8	50	1,462	R58AAEM606	N15	L15
5	10	1,769	5/8	18	726	R58AAEM509	N8	L8	36	1,452	R58AAEM506	N15	L15
6	10	1,935	5/8	14	750	R58AAEM509	N8	L8	28	1,500	R58AAEM606	N16	L16
8	10	2,222	5/8	18	1,491	R58AAEM606	N15	L15	10	825	R58AAEM506	N9	L9
				2-Way Transverse Brace Pattern (B2.12, B2.13)					**4-Way Transverse, Longit. Brace Pattern (B4.0, B4.1, B4.3)**				
1 1/2	10	57	3/8	27	86	R38AAEM306	N1	L1	75	238	R38AAEM306	N3	L3
2	10	80	3/8	30	134	R38AAEM306	N2	L2	83	365	R38AAEM406	N4	L4
2 1/2	10	119	1/2	35	229	R12AAEM306	N3	L3	75	500	R12AAEM406	N5	L5
3	10	160	1/2	38	335	R12AAEM406	N4	L4	92	815	R12AAEM506	N9	L9
4	10	263	5/8	39	568	R58AAEM406	N6	L6	66	958	R58AAEM506	N10	L10
5	10	363	5/8	39	790	R58AAEM509	N8	L8	45	903	R58AAEM506	N10	L10
6	10	482	5/8	30	804	R58AAEM506	N9	L9	39	1,040	R58AAEM506	N11	L11
8	10	746	5/8	19	805	R58AAEM506	N9	L9	10	413	R58AAEM406	N5	L5
10	10	1,093	5/8	15	911	R58AAEM506	N10	L10	34	2,093	R58AAB2P09	N21	L21
12	10	1,424	5/8	12	950	R58AAEM506	N10	L10	26	2,092	R58AAB2P09	N21	L21
				TRANSVERSE, LONGITUDINAL BRACING REQUIREMENTS									
				4-Way Splayed Brace Pattern (B4.13, B4.14)									
1 1/2	10	57	3/8	27	121	R38AAEM306	N2	L2					
2	10	80	3/8	30	190	R38AAEM306	N2	L2					
2 1/2	10	119	1/2	35	324	R12AAEM409	N4	L4					
3	10	160	1/2	38	474	R12AAEM406	N5	L5					
4	10	263	5/8	39	803	R58AAEM506	N9	L9					
5	10	363	5/8	39	1,117	R58AAEM506	N12	L12					
6	10	482	5/8	35	1,308	R58AAEM506	N14	L14					
8	10	746	5/8	19	1,138	R58AAEM506	N12	L12					
10	10	1,093	5/8	22	1,867	R58AAEM606	N19	L19					
12	10	1,424	5/8	17	1,866	R58AAEM606	N19	L19					
14	10	1,646	5/8	15	1,887	R58AAEM606	N19	L19					
16	10	2,028	5/8	12	1,900	R58AAEM606	N20	L20					

1. TVL = DL + Fv + ($0.2S_{DS}$/1.4 x Wp). All Terms Are Working Loads.
2. Reductions In Actual Installed Brace Spacing Will Result In An Equal Percentage Reduction In Brace Reaction. As An Option When This Occurs ISAT May Substitute An Alternate Anchorage From Tables D1 or D2 Which Meets or Exceeds The Lowered Brace Reaction.
3. At Max. 60 Degree Brace Inclination.
4. Min. 3,000 psi NWC. Any "N Series" Connection May Be Utilized Having A Numeric Designation Equal To Or Higher Than That Shown.
5. Min. 3,000 psi NWC or LWC. Any "L Series" Connection May Be Utilized Having A Numeric Designation Equal To Or Higher Than That Shown.
6. As An Alternate, Brace Anchorage Connections To Structure May Be Employed Using Any Detail From Structural Connections Section "D" Series Details Where Assembly Design Value Meets Or Exceeds Brace Reaction.
7. For Trade Specific Bracing Installation Notes, Refer To Page 8.1 or 10.1.
8. Utilize Any "G" Series Vertical Support Connection Having A Design Value Equal To Or Greater Than The Corresponding "Rod Total Vertical Load".
9. Based on Water Filled + Insulated Pipe Weight. Refer To Page X Series Weight Charts.
10. Pipe Sizes 12" and Greater Are Sched STD

REGISTERED PROFESSIONAL ENGINEER — NARCIN WASAZNIK — S-6612 — STRUCTURAL — STATE OF CALIFORNIA

ISAT
A Division of Tomarco Contractor Specialties
International Seismic Application Technology
14848 Northam Street, La Mirada, CA 90638
877-999-4728 (Toll Free) 714-523-0845 (Fax)
www.isatsb.com

Rev. 2
03/12/19
Page
C11-0.75-60

REVIEWED FOR CODE COMPLIANCE BY OPM
DATE: 01/26/2024
CALIFORNIA BUILDING CODE, 2022

RIGID BRACING REQUIREMENTS [7, 9, 10]

SINGLE HUNG STEEL PIPE (SCHED. 40) — **MAXIMUM SEISMIC DESIGN FORCE = 1.00 G's**

Requires Use of ISAT Seismic Brackets. Use of Any Non-ISAT Bracket Voids Engineering. 2013 California Building Code Compliant

Maximum Pipe Diameter (in.)	Max. Vertical Support Spacing (ft.)	Rod [1] Total Vertical Load (lbs)	Min. [8] Vertical Support Rod Dia. (in.)	TRANSVERSE BRACING REQUIREMENTS: Max. [2] Brace Spacing (ft.)	Brace [3] Reaction P (lbs)	Min. Brace Assembly E - Pages	Min. Brace Anchorage [6]: Form Pour [4] Deck Page D1	Min. Brace Anchorage [6]: Metal [5] Deck Page D2	LONGITUDINAL BRACING REQUIREMENTS: Max. [2] Brace Spacing (ft.)	Brace [3] Reaction P (lbs)	Min. Brace Assembly E - Pages	Min. Brace Anchorage [6]: Form Pour [4] Deck Page D1	Min. Brace Anchorage [6]: Metal [5] Deck Page D2
				1-Way Transverse Brace Pattern (B1.4, B1.5)					**2-Way Trans., Longit. Brace Pattern (B3.0, B3.1, B3.3)**				
1 1/2	10	222	3/8	23	114	R38AAEM306	N2	L2	63	310	R38AAEM409	N4	L4
2	10	336	3/8	26	179	R38AAEM306	N2	L2	71	480	R38AAEM406	N5	L5
2 1/2	10	481	1/2	30	305	R12AAEM409	N4	L4	64	655	R12AAEM406	N7	L7
3	10	740	1/2	33	447	R12AAEM406	N5	L5	78	1,070	R12AAEM506	N11	L11
4	10	996	5/8	34	757	R58AAEM509	N8	L8	56	1,255	R58AAEM506	N13	L13
5	10	1,150	5/8	33	1,035	R58AAEM506	N11	L11	38	1,185	R58AAEM506	N12	L12
6	10	1,396	5/8	29	1,215	R58AAEM506	N13	L13	33	1,365	R58AAEM506	N14	L14
8	10	1,338	5/8	17	1,055	R58AAEM506	N11	L11	8	540	R58AAEM406	N6	L6
				2-Way Transverse Brace Pattern (B2.12, B2.13)					**4-Way Transverse, Longit. Brace Pattern (B4.0, B4.1, B4.3)**				
1 1/2	10	57	3/8	23	57	R38AAEM306	N1	L1	63	155	R38AAEM306	N2	L2
2	10	80	3/8	26	90	R38AAEM306	N1	L1	71	240	R38AAEM306	N3	L3
2 1/2	10	119	1/2	30	153	R12AAEM306	N2	L2	64	328	R12AAEM409	N4	L4
3	10	160	1/2	33	223	R12AAEM306	N3	L3	78	535	R12AAEM406	N6	L6
4	10	263	5/8	34	379	R58AAEM406	N4	L4	56	628	R58AAEM406	N7	L7
5	10	363	5/8	33	518	R58AAEM406	N6	L6	38	593	R58AAEM406	N6	L6
6	10	482	5/8	29	608	R58AAEM406	N7	L7	33	683	R58AAEM509	N7	L7
8	10	746	5/8	17	528	R58AAEM406	N6	L6	8	270	R58AAEM306	N3	L3
10	10	1,093	5/8	15	701	R58AAEM509	N8	L8	30	1,402	R58AAEM506	N15	L15
12	10	1,424	5/8	11	670	R58AAEM509	N7	L7	22	1,340	R58AAEM506	N14	L14
				TRANSVERSE, LONGITUDINAL BRACING REQUIREMENTS									
				4-Way Splayed Brace Pattern (B4.13, B4.14)									
1 1/2	10	57	3/8	23	81	R38AAEM306	N1	L1					
2	10	80	3/8	26	127	R38AAEM306	N2	L2					
2 1/2	10	119	1/2	30	216	R12AAEM306	N3	L3					
3	10	160	1/2	33	316	R12AAEM409	N4	L4					
4	10	263	5/8	34	535	R58AAEM406	N6	L6					
5	10	363	5/8	33	732	R58AAEM509	N8	L8					
6	10	482	5/8	29	859	R58AAEM506	N9	L9					
8	10	746	5/8	17	746	R58AAEM509	N8	L8					
10	10	1,093	5/8	19	1,269	R58AAEM506	N13	L13					
12	10	1,424	5/8	15	1,269	R58AAEM506	N13	L13					
14	10	1,646	5/8	13	1,283	R58AAEM506	N13	L13					
16	10	2,028	5/8	11	1,292	R58AAEM506	N13	L13					

1. TVL = DL + Fv + ($0.2S_{DS}$/1.4 x Wp). All Terms Are Working Loads.
2. Reductions In Actual Installed Brace Spacing Will Result In An Equal Percentage Reduction In Brace Reaction. As An Option When This Occurs ISAT May Substitute An Alternate Anchorage From Tables D1 or D2 Which Meets or Exceeds The Lowered Brace Reaction.
3. At Max. 30 Degree Brace Inclination.
4. Min. 3,000 psi NWC. Any "N Series" Connection May Be Utilized Having A Numeric Designation Equal To Or Higher Than That Shown.
5. Min. 3,000 psi NWC or LWC. Any "L Series" Connection May Be Utilized Having A Numeric Designation Equal To Or Higher Than That Shown.
6. As An Alternate, Brace Anchorage Connections To Structure May Be Employed Using Any Detail From Structural Connections Section "D" Series Details Where Assembly Design Value Meets Or Exceeds Brace Reaction.
7. For Trade Specific Bracing Installation Notes, Refer To Page 8.1 or 10.1.
8. Utilize Any "G" Series Vertical Support Connection Having A Design Value Equal To Or Greater Than The Corresponding "Rod Total Vertical Load".
9. Based on Water Filled + Insulated Pipe Weight. Refer To Page X Series Weight Charts.
10. Pipe Sizes 12" and Greater Are Sched STD

REGISTERED PROFESSIONAL ENGINEER MARC IN WASAZNIK S-6612 STRUCTURAL STATE OF CALIFORNIA

ISAT
A Division of Tomarco Contractor Specialties

International Seismic Application Technology
14848 Northam Street, La Mirada, CA 90638
877-999-4728 (Toll Free) 714-523-0845 (Fax)
www.isatsb.com

Rev. 2
03/12/19

REVIEWED FOR CODE COMPLIANCE HCAI OPM-0403 DATE 01/26/2024 CALIFORNIA BUILDING CODE, 2022

RIGID BRACING REQUIREMENTS [7, 9, 10]

SINGLE HUNG STEEL PIPE (SCHED. 40) — **MAXIMUM SEISMIC DESIGN FORCE = 1.00 G's**

Requires Use of ISAT Seismic Brackets. Use of Any Non-ISAT Bracket Voids Engineering. 2013 California Building Code Compliant

Maximum Pipe Diameter (in.)	Max. Vertical Support Spacing (ft.)	Rod [1] Total Vertical Load (lbs)	Min. [8] Vertical Support Rod Dia. (in.)	TRANSVERSE BRACING REQUIREMENTS: Max. [2] Brace Spacing (ft.)	Brace [3] Reaction P (lbs)	Min. Brace Assembly E - Pages	Min. Brace Anchorage [6] Form Pour [4] Deck Page D1	Min. Brace Anchorage [6] Metal [5] Deck Page D2	LONGITUDINAL BRACING REQUIREMENTS: Max. [2] Brace Spacing (ft.)	Brace [3] Reaction P (lbs)	Min. Brace Assembly E - Pages	Min. Brace Anchorage [6] Form Pour [4] Deck Page D1	Min. Brace Anchorage [6] Metal [5] Deck Page D2
				1-Way Transverse Brace Pattern (B1.4, B1.5)					**2-Way Trans., Longit. Brace Pattern (B3.0, B3.1, B3.3)**				
1 1/2	10	396	3/8	23	154	R38AAEM306	N2	L2	63	415	R38AAEM406	N5	L5
2	10	472	3/8	25	229	R38AAEM306	N3	L3	50	458	R38AAEM406	N5	L5
2 1/2	10	863	1/2	30	411	R12AAEM406	N5	L5	64	880	R12AAEM506	N9	L9
3	10	1,171	1/2	32	590	R12AAEM406	N6	L6	64	1,181	R12AAEM506	N12	L12
4	10	1,665	5/8	27	819	R58AAEM506	N9	L9	54	1,637	R58AAEM606	N17	L17
5	10	1,743	5/8	20	837	R58AAEM506	N9	L9	38	1,595	R58AAEM606	N16	L16
6	10	1,910	5/8	15	834	R58AAEM506	N9	L9	30	1,667	R58AAEM606	N17	L17
				2-Way Transverse Brace Pattern (B2.12, B2.13)					**4-Way Transverse, Longit. Brace Pattern (B4.0, B4.1, B4.3)**				
1 1/2	10	57	3/8	23	77	R38AAEM306	N1	L1	63	208	R38AAEM306	N3	L3
2	10	80	3/8	26	121	R38AAEM306	N2	L2	70	323	R38AAEM409	N4	L4
2 1/2	10	119	1/2	30	206	R12AAEM306	N3	L3	64	440	R12AAEM406	N5	L5
3	10	160	1/2	33	301	R12AAEM409	N4	L4	78	720	R12AAEM509	N8	L8
4	10	263	5/8	34	510	R58AAEM406	N6	L6	56	845	R58AAEM506	N9	L9
5	10	363	5/8	32	673	R58AAEM509	N7	L7	38	798	R58AAEM506	N8	L8
6	10	482	5/8	29	818	R58AAEM506	N9	L9	33	918	R58AAEM506	N10	L10
8	10	746	5/8	17	710	R58AAEM509	N8	L8	8	363	R58AAEM406	N4	L4
10	10	1,093	5/8	16	1,007	R58AAEM506	N11	L11	29	1,800	R58AAEM606	N18	L18
12	10	1,424	5/8	13	1,050	R58AAEM506	N11	L11	22	1,799	R58AAEM606	N18	L18
				TRANSVERSE, LONGITUDINAL BRACING REQUIREMENTS									
				4-Way Splayed Brace Pattern (B4.13, B4.14)									
1 1/2	10	57	3/8	23	109	R38AAEM306	N2	L2					
2	10	80	3/8	26	171	R38AAEM306	N2	L2					
2 1/2	10	119	1/2	30	291	R12AAEM306	N3	L3					
3	10	160	1/2	33	425	R12AAEM406	N5	L5					
4	10	263	5/8	34	721	R58AAEM509	N8	L8					
5	10	363	5/8	32	951	R58AAEM506	N10	L10					
6	10	482	5/8	29	1,156	R58AAEM506	N12	L12					
8	10	746	5/8	17	1,004	R58AAEM506	N11	L11					
10	10	1,093	5/8	17	1,485	R58AAEM606	N15	L15					
12	10	1,424	5/8	13	1,485	R58AAEM606	N15	L15					
14	10	1,646	5/8	11	1,501	R58AAEM606	N16	L16					

1. TVL = DL + Fv + ($0.2S_{DS}$/1.4 x Wp). All Terms Are Working Loads.
2. Reductions In Actual Installed Brace Spacing Will Result In An Equal Percentage Reduction In Brace Reaction. As An Option When This Occurs ISAT May Substitute An Alternate Anchorage From Tables D1 or D2 Which Meets or Exceeds The Lowered Brace Reaction.
3. At Max. 50 Degree Brace Inclination.
4. Min. 3,000 psi NWC. Any "N Series" Connection May Be Utilized Having A Numeric Designation Equal To Or Higher Than That Shown.
5. Min. 3,000 psi NWC or LWC. Any "L Series" Connection May Be Utilized Having A Numeric Designation Equal To Or Higher Than That Shown.
6. As An Alternate, Brace Anchorage Connections To Structure May Be Employed Using Any Detail From Structural Connections Section "D" Series Details Where Assembly Design Value Meets Or Exceeds Brace Reaction.
7. For Trade Specific Bracing Installation Notes, Refer To Page 8.1 or 10.1.
8. Utilize Any "G" Series Vertical Support Connection Having A Design Value Equal To Or Greater Than The Corresponding "Rod Total Vertical Load".
9. Based on Water Filled + Insulated Pipe Weight. Refer To Page X Series Weight Charts.
10. Pipe Sizes 12" and Greater Are Sched STD

REGISTERED PROFESSIONAL ENGINEER MARCIN WASAZNIK S 6612 STRUCTURAL STATE OF CALIFORNIA

ISAT
A Division of Tomarco Contractor Specialties
International Seismic Application Technology
14848 Northam Street, La Mirada, CA 90638
877-999-4728 (Toll Free) 714-523-0845 (Fax)
www.isatsb.com

Rev. 1
03/12/19
Page
C11-1-45

REVIEWED FOR CODE COMPLIANCE OPM-0403 DATE 1-26-2024 CALIFORNIA BUILDING CODE, 2022

RIGID BRACING REQUIREMENTS [7, 9, 10]

SINGLE HUNG STEEL PIPE (SCHED. 40) — **MAXIMUM SEISMIC DESIGN FORCE = 1.00 G's**

Requires Use of ISAT Seismic Brackets. Use of Any Non-ISAT Bracket Voids Engineering. 2013 California Building Code Compliant

Maximum Pipe Diameter (in.)	Max. Vertical Support Spacing (ft.)	Rod [1] Total Vertical Load (lbs)	Min. [8] Vertical Support Rod Dia. (in.)	TRANSVERSE BRACING REQUIREMENTS: Max. [2] Brace Spacing (ft.)	Brace [3] Reaction P (lbs)	Min. Brace Assembly E - Pages	Min. Brace Anchorage [6]: Form Pour [4] Deck Page D1	Min. Brace Anchorage [6]: Metal [5] Deck Page D2	LONGITUDINAL BRACING REQUIREMENTS: Max. [2] Brace Spacing (ft.)	Brace [3] Reaction P (lbs)	Min. Brace Assembly E - Pages	Min. Brace Anchorage [6]: Form Pour [4] Deck Page D1	Min. Brace Anchorage [6]: Metal [5] Deck Page D2
				1-Way Transverse Brace Pattern (B1.4, B1.5)					**2-Way Trans., Longit. Brace Pattern (B3.0, B3.1, B3.3)**				
1 1/2	10	441	3/8	23	198	R38AAEM306	N2	L2	47	397	R38AAEM406	N4	L4
2	10	467	3/8	17	200	R38AAEM306	N3	L3	34	401	R38AAEM406	N5	L5
2 1/2	10	1,099	1/2	30	529	R12AAEM406	N6	L6	57	1,000	R12AAEM506	N10	L10
3	10	1,171	1/2	22	522	R12AAEM406	N6	L6	44	1,044	R12AAEM506	N11	L11
4	10	1,622	5/8	18	702	R58AAEM509	N8	L8	36	1,403	R58AAEM506	N15	L15
5	10	1,717	5/8	13	699	R58AAEM509	N7	L7	26	1,398	R58AAEM506	N14	L14
6	10	1,866	5/8	10	714	R58AAEM509	N8	L8	20	1,429	R58AAEM506	N15	L15
				2-Way Transverse Brace Pattern (B2.12, B2.13)					**4-Way Transverse, Longit. Brace Pattern (B4.0, B4.1, B4.3)**				
1 1/2	10	57	3/8	23	99	R38AAEM306	N1	L1	56	238	R38AAEM306	N3	L3
2	10	80	3/8	26	155	R38AAEM306	N2	L2	62	365	R38AAEM406	N4	L4
2 1/2	10	119	1/2	30	264	R12AAEM306	N3	L3	57	500	R12AAEM406	N5	L5
3	10	160	1/2	33	387	R12AAEM406	N4	L4	69	815	R12AAEM506	N9	L9
4	10	263	5/8	34	655	R58AAEM406	N7	L7	49	958	R58AAEM506	N10	L10
5	10	363	5/8	29	790	R58AAEM509	N8	L8	34	903	R58AAEM506	N10	L10
6	10	482	5/8	23	822	R58AAEM506	N9	L9	29	1,040	R58AAEM506	N11	L11
8	10	746	5/8	15	805	R58AAEM506	N9	L9	7	413	R58AAEM406	N5	L5
10	10	1,093	5/8	10	810	R58AAEM506	N9	L9	26	2,093	R58AAB2P09	N21	L21
				TRANSVERSE, LONGITUDINAL BRACING REQUIREMENTS									
				4-Way Splayed Brace Pattern (B4.13, B4.14)									
1 1/2	10	57	3/8	23	140	R38AAEM306	N2	L2					
2	10	80	3/8	26	219	R38AAEM306	N3	L3					
2 1/2	10	119	1/2	30	374	R12AAEM406	N4	L4					
3	10	160	1/2	33	547	R12AAEM406	N6	L6					
4	10	263	5/8	34	926	R58AAEM506	N10	L10					
5	10	363	5/8	29	1,117	R58AAEM506	N12	L12					
6	10	482	5/8	26	1,308	R58AAEM506	N14	L14					
8	10	746	5/8	15	1,138	R58AAEM506	N12	L12					
10	10	1,093	5/8	16	1,867	R58AAEM606	N19	L19					
12	10	1,424	5/8	13	1,866	R58AAEM606	N19	L19					
14	10	1,646	5/8	11	1,887	R58AAEM606	N19	L19					

1. TVL = DL + Fv + ($0.2S_{DS}$/1.4 x Wp). All Terms Are Working Loads.
2. Reductions In Actual Installed Brace Spacing Will Result In An Equal Percentage Reduction In Brace Reaction. As An Option When This Occurs ISAT May Substitute An Alternate Anchorage From Tables D1 or D2 Which Meets or Exceeds The Lowered Brace Reaction.
3. At Max. 60 Degree Brace Inclination.
4. Min. 3,000 psi NWC. Any "N Series" Connection May Be Utilized Having A Numeric Designation Equal To Or Higher Than That Shown.
5. Min. 3,000 psi NWC or LWC. Any "L Series" Connection May Be Utilized Having A Numeric Designation Equal To Or Higher Than That Shown.
6. As An Alternate, Brace Anchorage Connections To Structure May Be Employed Using Any Detail From Structural Connections Section "D" Series Details Where Assembly Design Value Meets Or Exceeds Brace Reaction.
7. For Trade Specific Bracing Installation Notes, Refer To Page 8.1 or 10.1.
8. Utilize Any "G" Series Vertical Support Connection Having A Design Value Equal To Or Greater Than The Corresponding "Rod Total Vertical Load".
9. Based on Water Filled + Insulated Pipe Weight. Refer To Page X Series Weight Charts.
10. Pipe Sizes 12" and Greater Are Sched STD

REGISTERED PROFESSIONAL ENGINEER MARCIN WASAGNIK S-6612 STRUCTURAL STATE OF CALIFORNIA

ISAT
A Division of Tomarco Contractor Specialties

International Seismic Application Technology
14848 Northam Street, La Mirada, CA 90638
877-999-4728 (Toll Free) 714-523-0845 (Fax)
www.isatsb.com

Rev. 2
03/12/19
Page
C11-1-60

REVIEWED FOR CODE COMPLIANCE
OPM-0403
DATE 01/26/2024
CALIFORNIA BUILDING CODE 2022

CABLE BRACING REQUIREMENTS [7, 9, 10] :

SINGLE HUNG PIPE, SCHEDULE 40 STEEL — **MAXIMUM SEISMIC DESIGN FORCE = 0.25 G's**

Requires Use of ISAT Seismic Brackets. Use of Any Non-ISAT Bracket Voids Engineering. — *2013 California Building Code Compliant*

Maximum Pipe Diameter (in.)	Max. Vertical Support Spacing (ft.)	Rod [1] Total Vertical Load (lbs)	Min. [8] Vertical Support Rod Dia. (in.)	TRANSVERSE BRACING REQUIREMENTS: Max. [2] Brace Spacing (ft.)	Brace [3] Reaction P (lbs)	Min. Brace Assembly E - Pages	Min. Brace Anchorage [6] Form Pour [4] Deck Page D1	Min. Brace Anchorage [6] Metal [5] Deck Page D2	LONGITUDINAL BRACING REQUIREMENTS: Max. [2] Brace Spacing (ft.)	Brace [3] Reaction P (lbs)	Min. Brace Assembly E - Pages	Min. Brace Anchorage [6] Form Pour [4] Deck Page D1	Min. Brace Anchorage [6] Metal [5] Deck Page D2
				2-Way Transverse Brace Pattern (B6.4, B6.5)					**4-Way T/L Details (B7.0, B7.1, B7.2, B8.4)**				
1 1/2	10	57	3/8	39	48	C38AA04WS	N1	L1	117	143	C38AA04WS	N2	L2
2	10	80	3/8	43	74	C38AA04WS	N1	L1	130	222	C38AA04WS	N3	L3
2 1/2	10	119	1/2	48	123	C12AA04WS	N2	L2	145	370	C12AA04WS	N4	L4
3	10	160	1/2	53	182	C12AA04WS	N2	L2	160	546	C12AA04WS	N6	L6
4	10	263	5/8	58	329	C58AA04WS	N4	L4	175	987	C58AA06WS	N10	L10
5	10	363	5/8	65	504	C58AA04WS	N6	L6	153	1,185	C58AA06WS	N12	L12
6	10	482	5/8	71	728	C58AA06WS	N8	L8	132	1,365	C58AA06WS	N14	L14
8	10	746	5/8	66	1,055	C58AA06WS	N11	L11	34	540	C58AA04WS	N6	L6
10	10	1,093	5/8	31	724	C58AA06WS	N8	L8	62	1,449	C58AA06WS	N15	L15
12	10	1,425	5/8	23	701	C58AA06WS	N8	L8	46	1,401	C58AA06WS	N15	L15
14	10	1,628	5/8	20	696	C58AA06WS	N7	L7	40	1,393	C58AA06WS	N14	L14
16	10	1,992	5/8	17	724	C58AA06WS	N8	L8	34	1,448	C58AA06WS	N15	L15
				TRANSVERSE, LONGITUDINAL BRACING REQUIREMENTS (SELECT EITHER T/L OR SPLAY)									
				4-Way T/L Details (B7.0, B7.1, B7.2, B8.4)					**4-Way Splay Details (B9.0, B9.1, B9.1.1)**				
1 1/2	10	57	3/8	39	48	C38AA04WS	N1	L1	39	48	C38AA04WS	N1	L1
2	10	80	3/8	43	74	C38AA04WS	N1	L1	43	74	C38AA04WS	N1	L1
2 1/2	10	119	1/2	48	123	C12AA04WS	N2	L2	48	123	C12AA04WS	N2	L2
3	10	160	1/2	53	182	C12AA04WS	N2	L2	53	182	C12AA04WS	N2	L2
4	10	263	5/8	58	329	C58AA04WS	N4	L4	58	329	C58AA04WS	N4	L4
5	10	363	5/8	65	504	C58AA04WS	N6	L6	65	504	C58AA04WS	N6	L6
6	10	482	5/8	71	728	C58AA06WS	N8	L8	71	728	C58AA06WS	N8	L8
8	10	746	5/8	34	540	C58AA04WS	N6	L6	34	540	C58AA04WS	N6	L6
10	10	1,093	5/8	62	1,449	C58AA06WS	N15	L15	62	1,449	C58AA06WS	N15	L15
12	10	1,425	5/8	47	1,432	C58AA06WS	N15	L15	47	1,432	C58AA06WS	N15	L15
14	10	1,628	5/8	41	1,428	C58AA06WS	N15	L15	41	1,428	C58AA06WS	N15	L15
16	10	1,992	5/8	34	1,448	C58AA06WS	N15	L15	34	1,448	C58AA06WS	N15	L15

1. TVL = DL + Fv + ($0.2S_{DS}$/1.4 x Wp). All Terms Are Working Loads.
2. Reductions In Actual Installed Brace Spacing Will Result In An Equal Percentage Reduction In Brace Reaction. As An Option When This Occurs ISAT May Substitute An Alternate Anchorage From Tables D1 or D2 Which Meets or Exceeds The Lowered Brace Reaction.
3. At Max. 30 Degree Brace Inclination.
4. Min. 3,000 psi NWC. Any "N Series" Connection May Be Utilized Having A Numeric Designation Equal To Or Higher Than That Shown.
5. Min. 3,000 psi NWC or LWC. Any "L Series" Connection May Be Utilized Having A Numeric Designation Equal To Or Higher Than That Shown.
6. As An Alternate, Brace Anchorage Connections To Structure May Be Employed Using Any Detail From Structural Connections Section "D" Series Details Where Assembly Design Value Meets Or Exceeds Brace Reaction.
7. For Trade Specific Bracing Installation Notes, Refer To Page 8.1. and 10.1
8. Utilize Any "G" Series Vertical Support Connection Having A Design Value Equal To Or Greater Than The Corresponding "Rod Total Vertical Load".
9. Based on Water Filled + Insulated Pipe Weight. Refer to X-Series Weight Charts.
10. Pipe Sizes 12" and Greater Are Sched STD

REVIEWED FOR CODE COMPLIANCE
BY: William Staehlin
DATE: 01-26-2024
CALIFORNIA BUILDING CODE 2022

REGISTERED PROFESSIONAL ENGINEER — MARCIN WASAZNIK — S-6612 — STRUCTURAL — STATE OF CALIFORNIA

ISAT
A Division of Tomarco Contractor Specialties
International Seismic Application Technology
14848 Northam Street, La Mirada, CA 90638
877-999-4728 (Toll Free) 714-523-0845 (Fax)
www.isatsb.com

Rev. 2
03/12/19
Page
C12-0.25-30

CABLE BRACING REQUIREMENTS [7, 9, 10] :

SINGLE HUNG PIPE, SCHEDULE 40 STEEL — **MAXIMUM SEISMIC DESIGN FORCE = 0.25 G's**

Requires Use of ISAT Seismic Brackets. Use of Any Non-ISAT Bracket Voids Engineering. — *2013 California Building Code Compliant*

Maximum Pipe Diameter (in.)	Max. Vertical Support Spacing (ft.)	Rod [1] Total Vertical Load (lbs)	Min. [8] Vertical Support Rod Dia. (in.)	TRANSVERSE BRACING REQUIREMENTS: Max. [2] Brace Spacing (ft.)	Brace [3] Reaction P (lbs)	Min. Brace Assembly E - Pages	Min. Brace Anchorage [6]: Form Pour [4] Deck Page D1	Metal [5] Deck Page D2	LONGITUDINAL BRACING REQUIREMENTS: Max. [2] Brace Spacing (ft.)	Brace [3] Reaction P (lbs)	Min. Brace Assembly E - Pages	Min. Brace Anchorage [6]: Form Pour [4] Deck Page D1	Metal [5] Deck Page D2
				2-Way Transverse Brace Pattern (B6.4, B6.5)					**4-Way T/L Details (B7.0, B7.1, B7.2, B8.4)**				
1 1/2	10	57	3/8	39	64	C38AA04WS	N1	L1	117	193	C38AA04WS	N2	L2
2	10	80	3/8	43	99	C38AA04WS	N1	L1	130	298	C38AA04WS	N3	L3
2 1/2	10	119	1/2	48	166	C12AA04WS	N2	L2	145	498	C12AA04WS	N5	L5
3	10	160	1/2	53	245	C12AA04WS	N3	L3	160	736	C12AA06WS	N8	L8
4	10	263	5/8	58	440	C58AA04WS	N5	L5	174	1,319	C58AA06WS	N14	L14
5	10	363	5/8	42	439	C58AA04WS	N5	L5	126	1,318	C58AA06WS	N14	L14
6	10	482	5/8	32	445	C58AA04WS	N5	L5	96	1,334	C58AA06WS	N14	L14
8	10	746	5/8	66	1,420	C58AA06WS	N15	L15	34	725	C58AA06WS	N8	L8
10	10	1,093	5/8	23	724	C58AA06WS	N8	L8	46	1,448	C58AA06WS	N15	L15
12	10	1,425	5/8	18	739	C58AA06WS	N8	L8	36	1,478	C58AA06WS	N15	L15
14	10	1,628	5/8	16	751	C58AA06WS	N8	L8	32	1,501	C58DG06TS	N16	L16
16	10	1,992	5/8	14	803	C58AA06WS	N9	L9	28	1,607	C58DG06TS	N17	L17
				TRANSVERSE, LONGITUDINAL BRACING REQUIREMENTS (SELECT EITHER T/L OR SPLAY)									
				4-Way T/L Details (B7.0, B7.1, B7.2, B8.4)					**4-Way Splay Details (B9.0, B9.1, B9.1.1)**				
1 1/2	10	57	3/8	39	64	C38AA04WS	N1	L1	39	64	C38AA04WS	N1	L1
2	10	80	3/8	43	99	C38AA04WS	N1	L1	43	99	C38AA04WS	N1	L1
2 1/2	10	119	1/2	48	166	C12AA04WS	N2	L2	48	166	C12AA04WS	N2	L2
3	10	160	1/2	53	245	C12AA04WS	N3	L3	53	245	C12AA04WS	N3	L3
4	10	263	5/8	58	443	C58AA04WS	N5	L5	58	443	C58AA04WS	N5	L5
5	10	363	5/8	65	679	C58AA06WS	N7	L7	65	679	C58AA06WS	N7	L7
6	10	482	5/8	71	980	C58AA06WS	N10	L10	71	980	C58AA06WS	N10	L10
8	10	746	5/8	34	725	C58AA06WS	N8	L8	34	725	C58AA06WS	N8	L8
10	10	1,093	5/8	46	1,448	C58AA06WS	N15	L15	46	1,448	C58AA06WS	N15	L15
12	10	1,425	5/8	37	1,519	C58DG06TS	N16	L16	37	1,519	C58DG06TS	N16	L16
14	10	1,628	5/8	33	1,548	C58DG06TS	N16	L16	33	1,548	C58DG06TS	N16	L16
16	10	1,992	5/8	28	1,607	C58DG06TS	N17	L17	28	1,607	C58DG06TS	N17	L17

1. TVL = DL + Fv + ($0.2S_{DS}$/1.4 x Wp). All Terms Are Working Loads.
2. Reductions In Actual Installed Brace Spacing Will Result In An Equal Percentage Reduction In Brace Reaction. As An Option When This Occurs ISAT May Substitute An Alternate Anchorage From Tables D1 or D2 Which Meets or Exceeds The Lowered Brace Reaction.
3. At Max. 50 Degree Brace Inclination.
4. Min. 3,000 psi NWC. Any "N Series" Connection May Be Utilized Having A Numeric Designation Equal To Or Higher Than That Shown.
5. Min. 3,000 psi NWC or LWC. Any "L Series" Connection May Be Utilized Having A Numeric Designation Equal To Or Higher Than That Shown.
6. As An Alternate, Brace Anchorage Connections To Structure May Be Employed Using Any Detail From Structural Connections Section "D" Series Details Where Assembly Design Value Meets Or Exceeds Brace Reaction.
7. For Trade Specific Bracing Installation Notes, Refer To Page 8.1. and 10.1
8. Utilize Any "G" Series Vertical Support Connection Having A Design Value Equal To Or Greater Than The Corresponding "Rod Total Vertical Load".
9. Based on Water Filled + Insulated Pipe Weight. Refer to X-Series Weight Charts.
10. Pipe Sizes 12" and Greater Are Sched STD

REGISTERED PROFESSIONAL ENGINEER MARCIN WASAZNIK S-6612 STRUCTURAL STATE OF CALIFORNIA

ISAT
A Division of Tomarco Contractor Specialties

International Seismic Application Technology
14848 Northam Street, La Mirada, CA 90638
877-999-4728 (Toll Free) 714-523-0845 (Fax)
www.isatsb.com

Rev. 2
03/12/19
Page
C12-0.25-45

REVIEWED FOR CODE COMPLIANCE
OPM 0403
BY: William Staehlin
DATE: 01-26-2024
CALIFORNIA BUILDING CODE 2022

CABLE BRACING REQUIREMENTS [7, 9, 10] :

SINGLE HUNG PIPE, SCHEDULE 40 STEEL — **MAXIMUM SEISMIC DESIGN FORCE = 0.25 G's**

Requires Use of ISAT Seismic Brackets. Use of Any Non-ISAT Bracket Voids Engineering. — *2013 California Building Code Compliant*

Maximum Pipe Diameter (in.)	Max. Vertical Support Spacing (ft.)	Rod [1] Total Vertical Load (lbs)	Min. [8] Vertical Support Rod Dia. (in.)	TRANSVERSE BRACING REQUIREMENTS					LONGITUDINAL BRACING REQUIREMENTS				
				Max. [2] Brace Spacing (ft.)	Brace [3] Reaction P (lbs)	Min. Brace Assembly E - Pages	Min. Brace Anchorage [6] Form Pour [4] Deck Page D1	Min. Brace Anchorage [6] Metal [5] Deck Page D2	Max. [2] Brace Spacing (ft.)	Brace [3] Reaction P (lbs)	Min. Brace Assembly E - Pages	Min. Brace Anchorage [6] Form Pour [4] Deck Page D1	Min. Brace Anchorage [6] Metal [5] Deck Page D2
				2-Way Transverse Brace Pattern (B6.4, B6.5)					4-Way T/L Details (B7.0, B7.1, B7.2, B8.4)				
1 1/2	10	57	3/8	39	83	C38AA04WS	N1	L1	117	248	C38AA04WS	N3	L3
2	10	80	3/8	43	128	C38AA04WS	N2	L2	87	256	C38AA04WS	N3	L3
2 1/2	10	119	1/2	48	214	C12AA04WS	N3	L3	145	641	C12AA04WS	N7	L7
3	10	160	1/2	46	273	C12AA04WS	N3	L3	138	818	C12AA06WS	N9	L9
4	10	263	5/8	40	390	C58AA04WS	N4	L4	120	1,169	C58AA06WS	N12	L12
5	10	363	5/8	44	592	C58AA04WS	N6	L6	88	1,183	C58AA06WS	N12	L12
6	10	482	5/8	33	589	C58AA04WS	N6	L6	66	1,179	C58AA06WS	N12	L12
8	10	746	5/8	52	1,436	C58AA06WS	N15	L15	30	825	C58AA06WS	N9	L9
10	10	1,093	5/8	16	648	C58AA04WS	N7	L7	32	1,295	C58AA06WS	N13	L13
12	10	1,425	5/8	12	633	C58AA04WS	N7	L7	24	1,266	C58AA06WS	N13	L13
14	10	1,628	5/8	11	663	C58AA04WS	N7	L7	22	1,327	C58AA06WS	N14	L14
				TRANSVERSE, LONGITUDINAL BRACING REQUIREMENTS (SELECT EITHER T/L OR SPLAY)									
				4-Way T/L Details (B7.0, B7.1, B7.2, B8.4)					4-Way Splay Details (B9.0, B9.1, B9.1.1)				
1 1/2	10	57	3/8	39	83	C38AA04WS	N1	L1	39	83	C38AA04WS	N1	L1
2	10	80	3/8	43	128	C38AA04WS	N2	L2	43	128	C38AA04WS	N2	L2
2 1/2	10	119	1/2	48	214	C12AA04WS	N3	L3	48	214	C12AA04WS	N3	L3
3	10	160	1/2	53	315	C12AA04WS	N4	L4	53	315	C12AA04WS	N4	L4
4	10	263	5/8	58	570	C58AA04WS	N6	L6	58	570	C58AA04WS	N6	L6
5	10	363	5/8	65	873	C58AA06WS	N9	L9	65	873	C58AA06WS	N9	L9
6	10	482	5/8	66	1,179	C58AA06WS	N12	L12	66	1,179	C58AA06WS	N12	L12
8	10	746	5/8	30	825	C58AA06WS	N9	L9	30	825	C58AA06WS	N9	L9
10	10	1,093	5/8	32	1,295	C58AA06WS	N13	L13	32	1,295	C58AA06WS	N13	L13
12	10	1,425	5/8	25	1,319	C58AA06WS	N14	L14	25	1,319	C58AA06WS	N14	L14
14	10	1,628	5/8	22	1,327	C58AA06WS	N14	L14	22	1,327	C58AA06WS	N14	L14
16	10	1,992	5/8	19	1,402	C58AA06WS	N15	L15	19	1,402	C58AA06WS	N15	L15

1. TVL = DL + Fv + ($0.2S_{DS}$/1.4 x Wp). All Terms Are Working Loads.
2. Reductions In Actual Installed Brace Spacing Will Result In An Equal Percentage Reduction In Brace Reaction. As An Option When This Occurs ISAT May Substitute An Alternate Anchorage From Tables D1 or D2 Which Meets or Exceeds The Lowered Brace Reaction.
3. At Max. 60 Degree Brace Inclination.
4. Min. 3,000 psi NWC. Any "N Series" Connection May Be Utilized Having A Numeric Designation Equal To Or Higher Than That Shown.
5. Min. 3,000 psi NWC or LWC. Any "L Series" Connection May Be Utilized Having A Numeric Designation Equal To Or Higher Than That Shown.
6. As An Alternate, Brace Anchorage Connections To Structure May Be Employed Using Any Detail From Structural Connections Section "D" Series Details Where Assembly Design Value Meets Or Exceeds Brace Reaction.
7. For Trade Specific Bracing Installation Notes, Refer To Page 8.1. and 10.1
8. Utilize Any "G" Series Vertical Support Connection Having A Design Value Equal To Or Greater Than The Corresponding "Rod Total Vertical Load".
9. Based on Water Filled + Insulated Pipe Weight. Refer to X-Series Weight Charts.
10. Pipe Sizes 12" and Greater Are Sched STD

REGISTERED PROFESSIONAL ENGINEER MARCIN WASAZNIK S-6612 STRUCTURAL STATE OF CALIFORNIA

ISAT
A Division of Tomarco Contractor Specialties

International Seismic Application Technology
14848 Northam Street, La Mirada, CA 90638
877-999-4728 (Toll Free) 714-523-0845 (Fax)
www.isatsb.com

Rev. 2
03/12/19
Page
C12-0.25-60

REVIEWED FOR CODE COMPLIANCE BY: William Staehlin DATE: 01-26-2024 CALIFORNIA BUILDING CODE 2022

CABLE BRACING REQUIREMENTS [7, 9, 10] :

SINGLE HUNG PIPE, SCHEDULE 40 STEEL — **MAXIMUM SEISMIC DESIGN FORCE = 0.50 G's**

Requires Use of ISAT Seismic Brackets. Use of Any Non-ISAT Bracket Voids Engineering. — *2013 California Building Code Compliant*

Maximum Pipe Diameter (in.)	Max. Vertical Support Spacing (ft.)	Rod [1] Total Vertical Load (lbs)	Min. [8] Vertical Support Rod Dia. (in.)	TRANSVERSE BRACING REQUIREMENTS: Max. [2] Brace Spacing (ft.)	Brace [3] Reaction P (lbs)	Min. Brace Assembly E - Pages	Min. Brace Anchorage [6]: Form Pour [4] Deck Page D1	Metal [5] Deck Page D2	LONGITUDINAL BRACING REQUIREMENTS: Max. [2] Brace Spacing (ft.)	Brace [3] Reaction P (lbs)	Min. Brace Assembly E - Pages	Min. Brace Anchorage [6]: Form Pour [4] Deck Page D1	Metal [5] Deck Page D2
				2-Way Transverse Brace Pattern (B6.4, B6.5)					**4-Way T/L Details (B7.0, B7.1, B7.2, B8.4)**				
1 1/2	10	57	3/8	33	80	C38AA04WS	N1	L1	98	240	C38AA04WS	N3	L3
2	10	80	3/8	37	124	C38AA04WS	N2	L2	110	373	C38AA04WS	N4	L4
2 1/2	10	119	1/2	41	207	C12AA04WS	N3	L3	122	622	C12AA04WS	N7	L7
3	10	160	1/2	45	306	C12AA04WS	N4	L4	134	919	C12AA06WS	N10	L10
4	10	263	5/8	48	535	C58AA04WS	N6	L6	112	1,255	C58AA06WS	N13	L13
5	10	363	5/8	52	803	C58AA06WS	N9	L9	76	1,185	C58AA06WS	N12	L12
6	10	482	5/8	56	1,148	C58AA06WS	N12	L12	66	1,365	C58AA06WS	N14	L14
8	10	746	5/8	33	1,055	C58AA06WS	N11	L11	17	540	C58AA04WS	N6	L6
10	10	1,093	5/8	15	701	C58AA06WS	N8	L8	30	1,402	C58AA06WS	N15	L15
12	10	1,425	5/8	11	670	C58AA06WS	N7	L7	22	1,340	C58AA06WS	N14	L14
14	10	1,628	5/8	10	696	C58AA06WS	N7	L7	20	1,393	C58AA06WS	N14	L14
				TRANSVERSE, LONGITUDINAL BRACING REQUIREMENTS (SELECT EITHER T/L OR SPLAY)									
				4-Way T/L Details (B7.0, B7.1, B7.2, B8.4)					**4-Way Splay Details (B9.0, B9.1, B9.1.1)**				
1 1/2	10	57	3/8	33	80	C38AA04WS	N1	L1	33	80	C38AA04WS	N1	L1
2	10	80	3/8	37	124	C38AA04WS	N2	L2	37	124	C38AA04WS	N2	L2
2 1/2	10	119	1/2	41	207	C12AA04WS	N3	L3	41	207	C12AA04WS	N3	L3
3	10	160	1/2	45	306	C12AA04WS	N4	L4	45	306	C12AA04WS	N4	L4
4	10	263	5/8	48	535	C58AA04WS	N6	L6	48	535	C58AA04WS	N6	L6
5	10	363	5/8	52	803	C58AA06WS	N9	L9	52	803	C58AA06WS	N9	L9
6	10	482	5/8	56	1,148	C58AA06WS	N12	L12	56	1,148	C58AA06WS	N12	L12
8	10	746	5/8	17	540	C58AA04WS	N6	L6	17	540	C58AA04WS	N6	L6
10	10	1,093	5/8	31	1,449	C58AA06WS	N15	L15	31	1,449	C58AA06WS	N15	L15
12	10	1,425	5/8	23	1,401	C58AA06WS	N15	L15	23	1,401	C58AA06WS	N15	L15
14	10	1,628	5/8	20	1,393	C58AA06WS	N14	L14	20	1,393	C58AA06WS	N14	L14
16	10	1,992	5/8	17	1,448	C58AA06WS	N15	L15	17	1,448	C58AA06WS	N15	L15

1. TVL = DL + Fv + ($0.2S_{DS}$/1.4 x Wp). All Terms Are Working Loads.
2. Reductions In Actual Installed Brace Spacing Will Result In An Equal Percentage Reduction In Brace Reaction. As An Option When This Occurs ISAT May Substitute An Alternate Anchorage From Tables D1 or D2 Which Meets or Exceeds The Lowered Brace Reaction.
3. At Max. 30 Degree Brace Inclination.
4. Min. 3,000 psi NWC. Any "N Series" Connection May Be Utilized Having A Numeric Designation Equal To Or Higher Than That Shown.
5. Min. 3,000 psi NWC or LWC. Any "L Series" Connection May Be Utilized Having A Numeric Designation Equal To Or Higher Than That Shown.
6. As An Alternate, Brace Anchorage Connections To Structure May Be Employed Using Any Detail From Structural Connections Section "D" Series Details Where Assembly Design Value Meets Or Exceeds Brace Reaction.
7. For Trade Specific Bracing Installation Notes, Refer To Page 8.1. and 10.1
8. Utilize Any "G" Series Vertical Support Connection Having A Design Value Equal To Or Greater Than The Corresponding "Rod Total Vertical Load".
9. Based on Water Filled + Insulated Pipe Weight. Refer to X-Series Weight Charts.
10. Pipe Sizes 12" and Greater Are Sched STD

REGISTERED PROFESSIONAL ENGINEER MARCIN WASAZNIK S-6612 STRUCTURAL STATE OF CALIFORNIA

ISAT
A Division of Tomarco Contractor Specialties

International Seismic Application Technology
14848 Northam Street, La Mirada, CA 90638
877-999-4728 (Toll Free) 714-523-0845 (Fax)
www.isatsb.com

Rev. 2
03/12/19
Page
C12-0.5-30

REVIEWED FOR CODE COMPLIANCE BY: William Staehlin DATE: 01-26-2024 CALIFORNIA BUILDING CODE 2022

CABLE BRACING REQUIREMENTS [7, 9, 10]:

SINGLE HUNG PIPE, SCHEDULE 40 STEEL — **MAXIMUM SEISMIC DESIGN FORCE = 0.50 G's**

Requires Use of ISAT Seismic Brackets. Use of Any Non-ISAT Bracket Voids Engineering. — *2013 California Building Code Compliant*

Maximum Pipe Diameter (in.)	Max. Vertical Support Spacing (ft.)	Rod [1] Total Vertical Load (lbs)	Min. [8] Vertical Support Rod Dia. (in.)	TRANSVERSE BRACING REQUIREMENTS: Max. [2] Brace Spacing (ft.)	Brace [3] Reaction P (lbs)	Min. Brace Assembly E - Pages	Min. Brace Anchorage [6] Form Pour [4] Deck Page D1	Min. Brace Anchorage [6] Metal [5] Deck Page D2	LONGITUDINAL BRACING REQUIREMENTS: Max. [2] Brace Spacing (ft.)	Brace [3] Reaction P (lbs)	Min. Brace Assembly E - Pages	Min. Brace Anchorage [6] Form Pour [4] Deck Page D1	Min. Brace Anchorage [6] Metal [5] Deck Page D2
				2-Way Transverse Brace Pattern (B6.4, B6.5)					**4-Way T/L Details (B7.0, B7.1, B7.2, B8.4)**				
1 1/2	10	57	3/8	33	108	C38AA04WS	N2	L2	98	324	C38AA04WS	N4	L4
2	10	80	3/8	37	167	C38AA04WS	N2	L2	73	335	C38AA04WS	N4	L4
2 1/2	10	119	1/2	41	279	C12AA04WS	N3	L3	122	838	C12AA06WS	N9	L9
3	10	160	1/2	45	413	C12AA04WS	N5	L5	89	825	C12AA06WS	N9	L9
4	10	263	5/8	43	652	C58AA04WS	N7	L7	86	1,304	C58AA06WS	N14	L14
5	10	363	5/8	32	669	C58AA04WS	N7	L7	64	1,339	C58AA06WS	N14	L14
6	10	482	5/8	24	667	C58AA04WS	N7	L7	48	1,334	C58AA06WS	N14	L14
8	10	746	5/8	33	1,420	C58AA06WS	N15	L15	17	725	C58AA06WS	N8	L8
10	10	1,093	5/8	11	693	C58AA06WS	N7	L7	22	1,385	C58AA06WS	N14	L14
				TRANSVERSE, LONGITUDINAL BRACING REQUIREMENTS (SELECT EITHER T/L OR SPLAY)									
				4-Way T/L Details (B7.0, B7.1, B7.2, B8.4)					**4-Way Splay Details (B9.0, B9.1, B9.1.1)**				
1 1/2	10	57	3/8	33	108	C38AA04WS	N2	L2	33	108	C38AA04WS	N2	L2
2	10	80	3/8	37	167	C38AA04WS	N2	L2	37	167	C38AA04WS	N2	L2
2 1/2	10	119	1/2	41	279	C12AA04WS	N3	L3	41	279	C12AA04WS	N3	L3
3	10	160	1/2	45	413	C12AA04WS	N5	L5	45	413	C12AA04WS	N5	L5
4	10	263	5/8	48	721	C58AA06WS	N8	L8	48	721	C58AA06WS	N8	L8
5	10	363	5/8	52	1,081	C58AA06WS	N11	L11	52	1,081	C58AA06WS	N11	L11
6	10	482	5/8	48	1,334	C58AA06WS	N14	L14	48	1,334	C58AA06WS	N14	L14
8	10	746	5/8	17	725	C58AA06WS	N8	L8	17	725	C58AA06WS	N8	L8
10	10	1,093	5/8	23	1,448	C58AA06WS	N15	L15	23	1,448	C58AA06WS	N15	L15
12	10	1,425	5/8	18	1,478	C58AA06WS	N15	L15	18	1,478	C58AA06WS	N15	L15
14	10	1,628	5/8	16	1,501	C58DG06TS	N16	L16	16	1,501	C58DG06TS	N16	L16
16	10	1,992	5/8	14	1,607	C58DG06TS	N17	L17	14	1,607	C58DG06TS	N17	L17

1. TVL = DL + Fv + ($0.2S_{DS}$/1.4 x Wp). All Terms Are Working Loads.
2. Reductions In Actual Installed Brace Spacing Will Result In An Equal Percentage Reduction In Brace Reaction. As An Option When This Occurs ISAT May Substitute An Alternate Anchorage From Tables D1 or D2 Which Meets or Exceeds The Lowered Brace Reaction.
3. At Max. 50 Degree Brace Inclination.
4. Min. 3,000 psi NWC. Any "N Series" Connection May Be Utilized Having A Numeric Designation Equal To Or Higher Than That Shown.
5. Min. 3,000 psi NWC or LWC. Any "L Series" Connection May Be Utilized Having A Numeric Designation Equal To Or Higher Than That Shown.
6. As An Alternate, Brace Anchorage Connections To Structure May Be Employed Using Any Detail From Structural Connections Section "D" Series Details Where Assembly Design Value Meets Or Exceeds Brace Reaction.
7. For Trade Specific Bracing Installation Notes, Refer To Page 8.1. and 10.1
8. Utilize Any "G" Series Vertical Support Connection Having A Design Value Equal To Or Greater Than The Corresponding "Rod Total Vertical Load".
9. Based on Water Filled + Insulated Pipe Weight. Refer to X-Series Weight Charts.
10. Pipe Sizes 12" and Greater Are Sched STD

REGISTERED PROFESSIONAL ENGINEER — MARCIN WASAZNIK — S-6612 — STRUCTURAL — STATE OF CALIFORNIA

ISAT — A Division of Tomarco Contractor Specialties

International Seismic Application Technology
14848 Northam Street, La Mirada, CA 90638
877-999-4728 (Toll Free) 714-523-0845 (Fax)
www.isatsb.com

Rev. 2
03/12/19
Page
C12-0.5-45

REVIEWED FOR CODE COMPLIANCE
OPM
BY: William Staehlin
DATE: 01-26-2024
CALIFORNIA BUILDING CODE 2022

CABLE BRACING REQUIREMENTS [7, 9, 10]:

SINGLE HUNG PIPE, SCHEDULE 40 STEEL — **MAXIMUM SEISMIC DESIGN FORCE = 0.50 G's**

Requires Use of ISAT Seismic Brackets. Use of Any Non-ISAT Bracket Voids Engineering. — *2013 California Building Code Compliant*

Maximum Pipe Diameter (in.)	Max. Vertical Support Spacing (ft.)	Rod [1] Total Vertical Load (lbs)	Min. [8] Vertical Support Rod Dia. (in.)	TRANSVERSE BRACING REQUIREMENTS: Max. [2] Brace Spacing (ft.)	Brace [3] Reaction P (lbs)	Min. Brace Assembly E - Pages	Min. Brace Anchorage [6]: Form Pour [4] Deck Page D1	Metal [5] Deck Page D2	LONGITUDINAL BRACING REQUIREMENTS: Max. [2] Brace Spacing (ft.)	Brace [3] Reaction P (lbs)	Min. Brace Assembly E - Pages	Min. Brace Anchorage [6]: Form Pour [4] Deck Page D1	Metal [5] Deck Page D2
				2-Way Transverse Brace Pattern (B6.4, B6.5)					**4-Way T/L Details (B7.0, B7.1, B7.2, B8.4)**				
1 1/2	10	57	3/8	33	139	C38AA04WS	N2	L2	65	278	C38AA04WS	N3	L3
2	10	80	3/8	27	159	C38AA04WS	N2	L2	54	318	C38AA04WS	N4	L4
2 1/2	10	119	1/2	41	359	C12AA04WS	N4	L4	81	718	C12AA06WS	N8	L8
3	10	160	1/2	34	403	C12AA04WS	N5	L5	68	806	C12AA06WS	N9	L9
4	10	263	5/8	30	585	C58AA04WS	N6	L6	60	1,169	C58AA06WS	N12	L12
5	10	363	5/8	22	592	C58AA04WS	N6	L6	44	1,183	C58AA06WS	N12	L12
6	10	482	5/8	16	572	C58AA04WS	N6	L6	32	1,143	C58AA06WS	N12	L12
8	10	746	5/8	26	1,436	C58AA06WS	N15	L15	15	825	C58AA06WS	N9	L9
				TRANSVERSE, LONGITUDINAL BRACING REQUIREMENTS (SELECT EITHER T/L OR SPLAY)									
				4-Way T/L Details (B7.0, B7.1, B7.2, B8.4)					**4-Way Splay Details (B9.0, B9.1, B9.1.1)**				
1 1/2	10	57	3/8	33	139	C38AA04WS	N2	L2	33	139	C38AA04WS	N2	L2
2	10	80	3/8	37	215	C38AA04WS	N3	L3	37	215	C38AA04WS	N3	L3
2 1/2	10	119	1/2	41	359	C12AA04WS	N4	L4	41	359	C12AA04WS	N4	L4
3	10	160	1/2	45	530	C12AA04WS	N6	L6	45	530	C12AA04WS	N6	L6
4	10	263	5/8	48	927	C58AA06WS	N10	L10	48	927	C58AA06WS	N10	L10
5	10	363	5/8	44	1,183	C58AA06WS	N12	L12	44	1,183	C58AA06WS	N12	L12
6	10	482	5/8	33	1,179	C58AA06WS	N12	L12	33	1,179	C58AA06WS	N12	L12
8	10	746	5/8	15	825	C58AA06WS	N9	L9	15	825	C58AA06WS	N9	L9
10	10	1,093	5/8	16	1,295	C58AA06WS	N13	L13	16	1,295	C58AA06WS	N13	L13
12	10	1,425	5/8	12	1,266	C58AA06WS	N13	L13	12	1,266	C58AA06WS	N13	L13
14	10	1,628	5/8	10	1,206	C58AA06WS	N13	L13	10	1,206	C58AA06WS	N13	L13

1. TVL = DL + Fv + ($0.2S_{DS}$/1.4 x Wp). All Terms Are Working Loads.
2. Reductions In Actual Installed Brace Spacing Will Result In An Equal Percentage Reduction In Brace Reaction. As An Option When This Occurs ISAT May Substitute An Alternate Anchorage From Tables D1 or D2 Which Meets or Exceeds The Lowered Brace Reaction.
3. At Max. 60 Degree Brace Inclination.
4. Min. 3,000 psi NWC. Any "N Series" Connection May Be Utilized Having A Numeric Designation Equal To Or Higher Than That Shown.
5. Min. 3,000 psi NWC or LWC. Any "L Series" Connection May Be Utilized Having A Numeric Designation Equal To Or Higher Than That Shown.
6. As An Alternate, Brace Anchorage Connections To Structure May Be Employed Using Any Detail From Structural Connections Section "D" Series Details Where Assembly Design Value Meets Or Exceeds Brace Reaction.
7. For Trade Specific Bracing Installation Notes, Refer To Page 8.1. and 10.1
8. Utilize Any "G" Series Vertical Support Connection Having A Design Value Equal To Or Greater Than The Corresponding "Rod Total Vertical Load".
10. Pipe Sizes 12" and Greater Are Sched STD

REGISTERED PROFESSIONAL ENGINEER MARCIN WASAZNIK S 6612 STRUCTURAL STATE OF CALIFORNIA

ISAT
A Division of Tomarco Contractor Specialties

International Seismic Application Technology
14848 Northam Street, La Mirada, CA 90638
877-999-4728 (Toll Free) 714-523-0845 (Fax)
www.isatsb.com

Rev. 2
03/12/19
Page
C12-0.5-60

REVIEWED FOR CODE COMPLIANCE BY: William Staehlin DATE: 01-26-2024 CALIFORNIA BUILDING CODE 2022

CABLE BRACING REQUIREMENTS [7, 9, 10]:

SINGLE HUNG PIPE, SCHEDULE 40 STEEL — **MAXIMUM SEISMIC DESIGN FORCE = 0.75 G's**

Requires Use of ISAT Seismic Brackets. Use of Any Non-ISAT Bracket Voids Engineering. — *2013 California Building Code Compliant*

Maximum Pipe Diameter (in.)	Max. Vertical Support Spacing (ft.)	Rod [1] Total Vertical Load (lbs)	Min. [8] Vertical Support Rod Dia. (in.)	TRANSVERSE BRACING REQUIREMENTS					LONGITUDINAL BRACING REQUIREMENTS				
				Max. [2] Brace Spacing (ft.)	Brace [3] Reaction P (lbs)	Min. Brace Assembly E - Pages	Min. Brace Anchorage [6] Form Pour [4] Deck Page D1	Min. Brace Anchorage [6] Metal [5] Deck Page D2	Max. [2] Brace Spacing (ft.)	Brace [3] Reaction P (lbs)	Min. Brace Assembly E - Pages	Min. Brace Anchorage [6] Form Pour [4] Deck Page D1	Min. Brace Anchorage [6] Metal [5] Deck Page D2
				2-Way Transverse Brace Pattern (B6.4, B6.5)					4-Way T/L Details (B7.0, B7.1, B7.2, B8.4)				
1 1/2	10	57	3/8	27	99	C38AA04WS	N1	L1	81	297	C38AA04WS	N3	L3
2	10	80	3/8	30	155	C38AA04WS	N2	L2	91	465	C38AA04WS	N5	L5
2 1/2	10	119	1/2	35	264	C12AA04WS	N3	L3	86	655	C12AA04WS	N7	L7
3	10	160	1/2	38	387	C12AA04WS	N4	L4	104	1,070	C12AA06WS	N11	L11
4	10	263	5/8	39	656	C58AA04WS	N7	L7	74	1,255	C58AA06WS	N13	L13
5	10	363	5/8	42	983	C58AA06WS	N10	L10	51	1,185	C58AA06WS	N12	L12
6	10	482	5/8	39	1,215	C58AA06WS	N13	L13	44	1,365	C58AA06WS	N14	L14
8	10	746	5/8	22	1,055	C58AA06WS	N11	L11	11	540	C58AA04WS	N6	L6
				TRANSVERSE, LONGITUDINAL BRACING REQUIREMENTS (SELECT EITHER T/L OR SPLAY)									
				4-Way T/L Details (B7.0, B7.1, B7.2, B8.4)					4-Way Splay Details (B9.0, B9.1, B9.1.1)				
1 1/2	10	57	3/8	27	99	C38AA04WS	N1	L1	27	99	C38AA04WS	N1	L1
2	10	80	3/8	30	155	C38AA04WS	N2	L2	30	155	C38AA04WS	N2	L2
2 1/2	10	119	1/2	35	264	C12AA04WS	N3	L3	35	264	C12AA04WS	N3	L3
3	10	160	1/2	38	387	C12AA04WS	N4	L4	38	387	C12AA04WS	N4	L4
4	10	263	5/8	39	656	C58AA04WS	N7	L7	39	656	C58AA04WS	N7	L7
5	10	363	5/8	42	983	C58AA06WS	N10	L10	42	983	C58AA06WS	N10	L10
6	10	482	5/8	39	1,215	C58AA06WS	N13	L13	39	1,215	C58AA06WS	N13	L13
8	10	746	5/8	11	540	C58AA04WS	N6	L6	11	540	C58AA04WS	N6	L6
10	10	1,093	5/8	20	1,402	C58AA06WS	N15	L15	20	1,402	C58AA06WS	N15	L15
12	10	1,425	5/8	15	1,371	C58AA06WS	N14	L14	15	1,371	C58AA06WS	N14	L14
14	10	1,628	5/8	13	1,358	C58AA06WS	N14	L14	13	1,358	C58AA06WS	N14	L14
16	10	1,992	5/8	11	1,406	C58AA06WS	N15	L15	11	1,406	C58AA06WS	N15	L15

1. TVL = DL + Fv + ($0.2S_{DS}$/1.4 x Wp). All Terms Are Working Loads.
2. Reductions In Actual Installed Brace Spacing Will Result In An Equal Percentage Reduction In Brace Reaction. As An Option When This Occurs ISAT May Substitute An Alternate Anchorage From Tables D1 or D2 Which Meets or Exceeds The Lowered Brace Reaction
3. At Max. 30 Degree Brace Inclination.
4. Min. 3,000 psi NWC. Any "N Series" Connection May Be Utilized Having A Numeric Designation Equal To Or Higher Than That Shown.
5. Min. 3,000 psi NWC or LWC. Any "L Series" Connection May Be Utilized Having A Numeric Designation Equal To Or Higher Than That Shown.
6. As An Alternate, Brace Anchorage Connections To Structure May Be Employed Using Any Detail From Structural Connections Section "D" Series Details Where Assembly Design Value Meets Or Exceeds Brace Reaction.
7. For Trade Specific Bracing Installation Notes, Refer To Page 8.1. and 10.1
8. Utilize Any "G" Series Vertical Support Connection Having A Design Value Equal To Or Greater Than The Corresponding "Rod Total Vertical Load".
9. Based on Water Filled + Insulated Pipe Weight. Refer to X-Series Weight Charts.
10. Pipe Sizes 12" and Greater Are Sched STD

REGISTERED PROFESSIONAL ENGINEER MARCIN WASAZNIK S 6612 STRUCTURAL STATE OF CALIFORNIA

ISAT
A Division of Tomarco Contractor Specialties

International Seismic Application Technology
14848 Northam Street, La Mirada, CA 90638
877-999-4728 (Toll Free) 714-523-0845 (Fax)
www.isatsb.com

Rev. 2
03/12/19
Page
C12-0.75-30

REVIEWED FOR CODE COMPLIANCE
OPM-0403
BY: William Staehlin
DATE: 01-26-2024
CALIFORNIA BUILDING CODE 2022

CABLE BRACING REQUIREMENTS [7, 9, 10]:

SINGLE HUNG PIPE, SCHEDULE 40 STEEL — **MAXIMUM SEISMIC DESIGN FORCE = 0.75 G's**

Requires Use of ISAT Seismic Brackets. Use of Any Non-ISAT Bracket Voids Engineering. — *2013 California Building Code Compliant*

Maximum Pipe Diameter (in.)	Max. Vertical Support Spacing (ft.)	Rod [1] Total Vertical Load (lbs)	Min. [8] Vertical Support Rod Dia. (in.)	TRANSVERSE BRACING REQUIREMENTS					LONGITUDINAL BRACING REQUIREMENTS				
				Max. [2] Brace Spacing (ft.)	Brace [3] Reaction P (lbs)	Min. Brace Assembly E - Pages	Min. Brace Anchorage [6] Form Pour [4] Deck Page D1	Min. Brace Anchorage [6] Metal [5] Deck Page D2	Max. [2] Brace Spacing (ft.)	Brace [3] Reaction P (lbs)	Min. Brace Assembly E - Pages	Min. Brace Anchorage [6] Form Pour [4] Deck Page D1	Min. Brace Anchorage [6] Metal [5] Deck Page D2
				2-Way Transverse Brace Pattern (B6.4, B6.5)					4-Way T/L Details (B7.0, B7.1, B7.2, B8.4)				
1 1/2	10	57	3/8	27	134	C38AA04WS	N2	L2	54	267	C38AA04WS	N3	L3
2	10	80	3/8	26	179	C38AA04WS	N2	L2	52	357	C38AA04WS	N4	L4
2 1/2	10	119	1/2	35	356	C12AA04WS	N4	L4	69	712	C12AA06WS	N8	L8
3	10	160	1/2	33	457	C12AA04WS	N5	L5	66	913	C12AA06WS	N10	L10
4	10	263	5/8	29	659	C58AA04WS	N7	L7	58	1,319	C58AA06WS	N14	L14
5	10	363	5/8	21	659	C58AA04WS	N7	L7	42	1,318	C58AA06WS	N14	L14
6	10	482	5/8	16	667	C58AA04WS	N7	L7	32	1,334	C58AA06WS	N14	L14
8	10	746	5/8	22	1,420	C58AA06WS	N15	L15	11	725	C58AA06WS	N8	L8
				TRANSVERSE, LONGITUDINAL BRACING REQUIREMENTS (SELECT EITHER T/L OR SPLAY)									
				4-Way T/L Details (B7.0, B7.1, B7.2, B8.4)					4-Way Splay Details (B9.0, B9.1, B9.1.1)				
1 1/2	10	57	3/8	27	134	C38AA04WS	N2	L2	27	134	C38AA04WS	N2	L2
2	10	80	3/8	30	209	C38AA04WS	N3	L3	30	209	C38AA04WS	N3	L3
2 1/2	10	119	1/2	35	356	C12AA04WS	N4	L4	35	356	C12AA04WS	N4	L4
3	10	160	1/2	38	521	C12AA04WS	N6	L6	38	521	C12AA04WS	N6	L6
4	10	263	5/8	39	883	C58AA06WS	N9	L9	39	883	C58AA06WS	N9	L9
5	10	363	5/8	42	1,324	C58AA06WS	N14	L14	42	1,324	C58AA06WS	N14	L14
6	10	482	5/8	32	1,334	C58AA06WS	N14	L14	32	1,334	C58AA06WS	N14	L14
8	10	746	5/8	11	725	C58AA06WS	N8	L8	11	725	C58AA06WS	N8	L8
10	10	1,093	5/8	15	1,417	C58AA06WS	N15	L15	15	1,417	C58AA06WS	N15	L15
12	10	1,425	5/8	12	1,478	C58AA06WS	N15	L15	12	1,478	C58AA06WS	N15	L15

1. TVL = DL + Fv + ($0.2S_{DS}$/1.4 x Wp). All Terms Are Working Loads.
2. Reductions In Actual Installed Brace Spacing Will Result In An Equal Percentage Reduction In Brace Reaction. As An Option When This Occurs ISAT May Substitute An Alternate Anchorage From Tables D1 or D2 Which Meets or Exceeds The Lowered Brace Reaction.
3. At Max. 50 Degree Brace Inclination.
4. Min. 3,000 psi NWC. Any "N Series" Connection May Be Utilized Having A Numeric Designation Equal To Or Higher Than That Shown.
5. Min. 3,000 psi NWC or LWC. Any "L Series" Connection May Be Utilized Having A Numeric Designation Equal To Or Higher Than That Shown.
6. As An Alternate, Brace Anchorage Connections To Structure May Be Employed Using Any Detail From Structural Connections Section "D" Series Details Where Assembly Design Value Meets Or Exceeds Brace Reaction.
7. For Trade Specific Bracing Installation Notes, Refer To Page 8.1. and 10.1
8. Utilize Any "G" Series Vertical Support Connection Having A Design Value Equal To Or Greater Than The Corresponding "Rod Total Vertical Load".
9. Based on Water Filled + Insulated Pipe Weight. Refer to X-Series Weight Charts.
10. Pipe Sizes 12" and Greater Are Sched STD

REVIEWED FOR CODE COMPLIANCE BY: William Staehlin DATE: 01-26-2024 CALIFORNIA BUILDING CODE, 2022

REGISTERED PROFESSIONAL ENGINEER MARCIN WASZANIK S 6612 STRUCTURAL STATE OF CALIFORNIA

ISAT
A Division of Tomarco Contractor Specialties
International Seismic Application Technology
14848 Northam Street, La Mirada, CA 90638
877-999-4728 (Toll Free) 714-523-0845 (Fax)
www.isatsb.com

Rev. 2
03/12/19
Page
C12-0.75-45

CABLE BRACING REQUIREMENTS [7, 9, 10] :

SINGLE HUNG PIPE, SCHEDULE 40 STEEL — **MAXIMUM SEISMIC DESIGN FORCE = 0.75 G's**

Requires Use of ISAT Seismic Brackets. Use of Any Non-ISAT Bracket Voids Engineering. — *2013 California Building Code Compliant*

Maximum Pipe Diameter (in.)	Max. Vertical Support Spacing (ft.)	Rod [1] Total Vertical Load (lbs)	Min. [8] Vertical Support Rod Dia. (in.)	TRANSVERSE BRACING REQUIREMENTS: Max. [2] Brace Spacing (ft.)	Brace [3] Reaction P (lbs)	Min. Brace Assembly E - Pages	Min. Brace Anchorage [6]: Form Pour [4] Deck Page D1	Min. Brace Anchorage [6]: Metal [5] Deck Page D2	LONGITUDINAL BRACING REQUIREMENTS: Max. [2] Brace Spacing (ft.)	Brace [3] Reaction P (lbs)	Min. Brace Assembly E - Pages	Min. Brace Anchorage [6]: Form Pour [4] Deck Page D1	Min. Brace Anchorage [6]: Metal [5] Deck Page D2
				2-Way Transverse Brace Pattern (B6.4, B6.5)					**4-Way T/L Details (B7.0, B7.1, B7.2, B8.4)**				
1 1/2	10	57	3/8	25	159	C38AA04WS	N2	L2	50	318	C38AA04WS	N4	L4
2	10	80	3/8	18	159	C38AA04WS	N2	L2	36	318	C38AA04WS	N4	L4
2 1/2	10	119	1/2	31	411	C12AA04WS	N5	L5	62	822	C12AA06WS	N9	L9
3	10	160	1/2	23	409	C12AA04WS	N5	L5	46	818	C12AA06WS	N9	L9
4	10	263	5/8	20	585	C58AA04WS	N6	L6	40	1,169	C58AA06WS	N12	L12
5	10	363	5/8	14	565	C58AA04WS	N6	L6	28	1,129	C58AA06WS	N12	L12
6	10	482	5/8	11	589	C58AA04WS	N6	L6	22	1,179	C58AA06WS	N12	L12
8	10	746	5/8	17	1,409	C58AA06WS	N15	L15	10	825	C58AA06WS	N9	L9
				TRANSVERSE, LONGITUDINAL BRACING REQUIREMENTS (SELECT EITHER T/L OR SPLAY)									
				4-Way T/L Details (B7.0, B7.1, B7.2, B8.4)					**4-Way Splay Details (B9.0, B9.1, B9.1.1)**				
1 1/2	10	57	3/8	27	172	C38AA04WS	N2	L2	27	172	C38AA04WS	N2	L2
2	10	80	3/8	30	269	C38AA04WS	N3	L3	30	269	C38AA04WS	N3	L3
2 1/2	10	119	1/2	35	458	C12AA04WS	N5	L5	35	458	C12AA04WS	N5	L5
3	10	160	1/2	38	670	C12AA04WS	N7	L7	38	670	C12AA04WS	N7	L7
4	10	263	5/8	39	1,136	C58AA06WS	N12	L12	39	1,136	C58AA06WS	N12	L12
5	10	363	5/8	29	1,170	C58AA06WS	N12	L12	29	1,170	C58AA06WS	N12	L12
6	10	482	5/8	22	1,179	C58AA06WS	N12	L12	22	1,179	C58AA06WS	N12	L12
8	10	746	5/8	10	825	C58AA06WS	N9	L9	10	825	C58AA06WS	N9	L9
10	10	1,093	5/8	10	1,214	C58AA06WS	N13	L13	10	1,214	C58AA06WS	N13	L13

1. TVL = DL + Fv + ($0.2S_{DS}$/1.4 x Wp). All Terms Are Working Loads.
2. Reductions In Actual Installed Brace Spacing Will Result In An Equal Percentage Reduction In Brace Reaction. As An Option When This Occurs ISAT May Substitute An Alternate Anchorage From Tables D1 or D2 Which Meets or Exceeds The Lowered Brace Reaction.
3. At Max. 60 Degree Brace Inclination.
4. Min. 3,000 psi NWC. Any "N Series" Connection May Be Utilized Having A Numeric Designation Equal To Or Higher Than That Shown.
5. Min. 3,000 psi NWC or LWC. Any "L Series" Connection May Be Utilized Having A Numeric Designation Equal To Or Higher Than That Shown.
6. As An Alternate, Brace Anchorage Connections To Structure May Be Employed Using Any Detail From Structural Connections Section "D" Series Details Where Assembly Design Value Meets Or Exceeds Brace Reaction.
7. For Trade Specific Bracing Installation Notes, Refer To Page 8.1. and 10.1
8. Utilize Any "G" Series Vertical Support Connection Having A Design Value Equal To Or Greater Than The Corresponding "Rod Total Vertical Load".
9. Based on Water Filled + Insulated Pipe Weight. Refer to X-Series Weight Charts.
10. Pipe Sizes 12" and Greater Are Sched STD

REGISTERED PROFESSIONAL ENGINEER MARCIN WASAZNIK S-6612 STRUCTURAL STATE OF CALIFORNIA

ISAT
A Division of Tomarco Contractor Specialties

International Seismic Application Technology
14848 Northam Street, La Mirada, CA 90638
877-999-4728 (Toll Free) 714-523-0845 (Fax)
www.isatsb.com

Rev. 2
03/12/19
Page
C12-0.75-60

REVIEWED FOR CODE COMPLIANCE BY: William Staehlin DATE: 01-26-2024 CALIFORNIA BUILDING CODE, 2022

CABLE BRACING REQUIREMENTS [7, 9, 10]:

SINGLE HUNG PIPE, SCHEDULE 40 STEEL — **MAXIMUM SEISMIC DESIGN FORCE = 1.00 G's**

Requires Use of ISAT Seismic Brackets. Use of Any Non-ISAT Bracket Voids Engineering. *2013 California Building Code Compliant*

Maximum Pipe Diameter (in.)	Max. Vertical Support Spacing (ft.)	Rod [1] Total Vertical Load (lbs)	Min. [8] Vertical Support Rod Dia. (in.)	TRANSVERSE BRACING REQUIREMENTS					LONGITUDINAL BRACING REQUIREMENTS				
				Max. [2] Brace Spacing (ft.)	Brace [3] Reaction P (lbs)	Min. Brace Assembly Page E3	Min. Brace Anchorage [6] Form Pour [4] Deck Page D1	Min. Brace Anchorage [6] Metal [5] Deck Page D2	Max. [2] Brace Spacing (ft.)	Brace [3] Reaction P (lbs)	Min. Brace Assembly Page E3	Min. Brace Anchorage [6] Form Pour [4] Deck Page D1	Min. Brace Anchorage [6] Metal [5] Deck Page D2
				2-Way Transverse Brace Pattern (B6.4, B6.5)					4-Way T/L Details (B7.0, B7.1, B7.2, B8.4)				
1 1/2	10	57	3/8	23	114	C38AA04WS	N2	L2	63	310	C38AA04WS	N4	L4
2	10	80	3/8	26	179	C38AA04WS	N2	L2	71	480	C38AA04WS	N5	L5
2 1/2	10	119	1/2	30	305	C12AA04WS	N4	L4	64	655	C12AA04WS	N7	L7
3	10	160	1/2	33	447	C12AA04WS	N5	L5	78	1,070	C12AA06WS	N11	L11
4	10	263	5/8	34	757	C58AA06WS	N8	L8	56	1,255	C58AA06WS	N13	L13
5	10	363	5/8	33	1,035	C58AA06WS	N11	L11	38	1,185	C58AA06WS	N12	L12
6	10	482	5/8	29	1,215	C58AA06WS	N13	L13	33	1,365	C58AA06WS	N14	L14
8	10	746	5/8	17	1,055	C58AA06WS	N11	L11	8	540	C58AA04WS	N6	L6
				TRANSVERSE, LONGITUDINAL BRACING REQUIREMENTS (SELECT EITHER T/L OR SPLAY)									
				4-Way T/L Details (B7.0, B7.1, B7.2, B8.4)					4-Way Splay Details (B9.0, B9.1, B9.1.1)				
1 1/2	10	57	3/8	23	114	C38AA04WS	N2	L2	23	114	C38AA04WS	N2	L2
2	10	80	3/8	26	179	C38AA04WS	N2	L2	26	179	C38AA04WS	N2	L2
2 1/2	10	119	1/2	30	305	C12AA04WS	N4	L4	30	305	C12AA04WS	N4	L4
3	10	160	1/2	33	447	C12AA04WS	N5	L5	33	447	C12AA04WS	N5	L5
4	10	263	5/8	34	757	C58AA06WS	N8	L8	34	757	C58AA06WS	N8	L8
5	10	363	5/8	33	1,035	C58AA06WS	N11	L11	33	1,035	C58AA06WS	N11	L11
6	10	482	5/8	29	1,215	C58AA06WS	N13	L13	29	1,215	C58AA06WS	N13	L13
8	10	746	5/8	8	540	C58AA04WS	N6	L6	8	540	C58AA04WS	N6	L6
10	10	1,093	5/8	15	1,402	C58AA06WS	N15	L15	15	1,402	C58AA06WS	N15	L15
12	10	1,425	5/8	11	1,340	C58AA06WS	N14	L14	11	1,340	C58AA06WS	N14	L14
14	10	1,628	5/8	10	1,393	C58AA06WS	N14	L14	10	1,393	C58AA06WS	N14	L14

1. TVL = DL + Fv + ($0.2S_{DS}$/1.4 x Wp). All Terms Are Working Loads.
2. Reductions In Actual Installed Brace Spacing Will Result In An Equal Percentage Reduction In Brace Reaction. As An Option When This Occurs ISAT May Substitute An Alternate Anchorage From Tables D1 or D2 Which Meets or Exceeds The Lowered Brace Reaction
3. At Max. 30 Degree Brace Inclination.
4. Min. 3,000 psi NWC. Any "N Series" Connection May Be Utilized Having A Numeric Designation Equal To Or Higher Than That Shown.
5. Min. 3,000 psi NWC or LWC. Any "L Series" Connection May Be Utilized Having A Numeric Designation Equal To Or Higher Than That Shown.
6. As An Alternate, Brace Anchorage Connections To Structure May Be Employed Using Any Detail From Structural Connections Section "D" Series Details Where Assembly Design Value Meets Or Exceeds Brace Reaction.
7. For Trade Specific Bracing Installation Notes, Refer To Page 8.1. and 10.1
8. Utilize Any "G" Series Vertical Support Connection Having A Design Value Equal To Or Greater Than The Corresponding "Rod Total Vertical Load".
9. Based on Water Filled + Insulated Pipe Weight. Refer to X-Series Weight Charts.
10. Pipe Sizes 12" and Greater Are Sched STD

REGISTERED PROFESSIONAL ENGINEER MARCIN WASAZNIK S-6612 STRUCTURAL STATE OF CALIFORNIA

ISAT
A Division of Tomarco Contractor Specialties

International Seismic Application Technology
14848 Northam Street, La Mirada, CA 90638
877-999-4728 (Toll Free) 714-523-0845 (Fax)
www.isatsb.com

Rev. 2
03/12/19
Page
C12-1-30

REVIEWED FOR CODE COMPLIANCE BY: William Staehlin DATE: 01-26-2024 CALIFORNIA BUILDING CODE 2022

CABLE BRACING REQUIREMENTS [7, 9, 10] :

SINGLE HUNG PIPE, SCHEDULE 40 STEEL — **MAXIMUM SEISMIC DESIGN FORCE = 1.00 G's**

Requires Use of ISAT Seismic Brackets. Use of Any Non-ISAT Bracket Voids Engineering. — *2013 California Building Code Compliant*

Maximum Pipe Diameter (in.)	Max. Vertical Support Spacing (ft.)	Rod [1] Total Vertical Load (lbs)	Min. [8] Vertical Support Rod Dia. (in.)	TRANSVERSE BRACING REQUIREMENTS					LONGITUDINAL BRACING REQUIREMENTS				
				Max. [2] Brace Spacing (ft.)	Brace [3] Reaction P (lbs)	Min. Brace Assembly E - Pages	Min. Brace Anchorage [6] Form Pour [4] Deck Page D1	Min. Brace Anchorage [6] Metal [5] Deck Page D2	Max. [2] Brace Spacing (ft.)	Brace [3] Reaction P (lbs)	Min. Brace Assembly E - Pages	Min. Brace Anchorage [6] Form Pour [4] Deck Page D1	Min. Brace Anchorage [6] Metal [5] Deck Page D2
				2-Way Transverse Brace Pattern (B6.4, B6.5)					4-Way T/L Details (B7.0, B7.1, B7.2, B8.4)				
1 1/2	10	57	3/8	23	154	C38AA04WS	N2	L2	47	308	C38AA04WS	N4	L4
2	10	80	3/8	19	174	C38AA04WS	N2	L2	38	348	C38AA04WS	N4	L4
2 1/2	10	119	1/2	30	411	C12AA04WS	N5	L5	60	823	C12AA06WS	N9	L9
3	10	160	1/2	25	461	C12AA04WS	N5	L5	50	923	C12AA06WS	N10	L10
4	10	263	5/8	21	637	C58AA04WS	N7	L7	42	1,273	C58AA06WS	N13	L13
5	10	363	5/8	16	669	C58AA04WS	N7	L7	32	1,339	C58AA06WS	N14	L14
6	10	482	5/8	12	667	C58AA04WS	N7	L7	24	1,334	C58AA06WS	N14	L14
8	10	746	5/8	17	1,420	C58AA06WS	N15	L15	8	725	C58AA06WS	N8	L8
				TRANSVERSE, LONGITUDINAL BRACING REQUIREMENTS (SELECT EITHER T/L OR SPLAY)									
				4-Way T/L Details (B7.0, B7.1, B7.2, B8.4)					4-Way Splay Details (B9.0, B9.1, B9.1.1)				
1 1/2	10	57	3/8	23	154	C38AA04WS	N2	L2	23	154	C38AA04WS	N2	L2
2	10	80	3/8	26	241	C38AA04WS	N3	L3	26	241	C38AA04WS	N3	L3
2 1/2	10	119	1/2	30	411	C12AA04WS	N5	L5	30	411	C12AA04WS	N5	L5
3	10	160	1/2	33	602	C12AA04WS	N7	L7	33	602	C12AA04WS	N7	L7
4	10	263	5/8	34	1,020	C58AA06WS	N11	L11	34	1,020	C58AA06WS	N11	L11
5	10	363	5/8	32	1,339	C58AA06WS	N14	L14	32	1,339	C58AA06WS	N14	L14
6	10	482	5/8	24	1,334	C58AA06WS	N14	L14	24	1,334	C58AA06WS	N14	L14
8	10	746	5/8	8	725	C58AA06WS	N8	L8	8	725	C58AA06WS	N8	L8
10	10	1,093	5/8	11	1,385	C58AA06WS	N14	L14	11	1,385	C58AA06WS	N14	L14

1. TVL = DL + Fv + ($0.2S_{DS}$/1.4 x Wp). All Terms Are Working Loads.
2. Reductions In Actual Installed Brace Spacing Will Result In An Equal Percentage Reduction In Brace Reaction. As An Option When This Occurs ISAT May Substitute An Alternate Anchorage From Tables D1 or D2 Which Meets or Exceeds The Lowered Brace Reaction.
3. At Max. 50 Degree Brace Inclination.
4. Min. 3,000 psi NWC. Any "N Series" Connection May Be Utilized Having A Numeric Designation Equal To Or Higher Than That Shown.
5. Min. 3,000 psi NWC or LWC. Any "L Series" Connection May Be Utilized Having A Numeric Designation Equal To Or Higher Than That Shown.
6. As An Alternate, Brace Anchorage Connections To Structure May Be Employed Using Any Detail From Structural Connections Section "D" Series Details Where Assembly Design Value Meets Or Exceeds Brace Reaction.
7. For Trade Specific Bracing Installation Notes, Refer To Page 8.1. and 10.1
8. Utilize Any "G" Series Vertical Support Connection Having A Design Value Equal To Or Greater Than The Corresponding "Rod Total Vertical Load".
9. Based on Water Filled + Insulated Pipe Weight. Refer to X-Series Weight Charts.
10. Pipe Sizes 12" and Greater Are Sched STD

REGISTERED PROFESSIONAL ENGINEER MARCIN WASAZNIK S 6612 STRUCTURAL STATE OF CALIFORNIA

ISAT
A Division of Tomarco Contractor Specialties
International Seismic Application Technology
14848 Northam Street, La Mirada, CA 90638
877-999-4728 (Toll Free) 714-523-0845 (Fax)
www.isatsb.com

Rev. 2
03/12/19
Page
C12-1-45

REVIEWED FOR CODE COMPLIANCE BY: William Staehlin DATE: 01-26-2024 CALIFORNIA BUILDING CODE, 2022

CABLE BRACING REQUIREMENTS [7, 9, 10]:

SINGLE HUNG PIPE, SCHEDULE 40 STEEL — **MAXIMUM SEISMIC DESIGN FORCE = 1.00 G's**

Requires Use of ISAT Seismic Brackets. Use of Any Non-ISAT Bracket Voids Engineering. — *2013 California Building Code Compliant*

Maximum Pipe Diameter (in.)	Max. Vertical Support Spacing (ft.)	Rod [1] Total Vertical Load (lbs)	Min. [8] Vertical Support Rod Dia. (in.)	TRANSVERSE BRACING REQUIREMENTS					LONGITUDINAL BRACING REQUIREMENTS				
				Max. [2] Brace Spacing (ft.)	Brace [3] Reaction P (lbs)	Min. Brace Assembly E - Pages	Min. Brace Anchorage [6] Form Pour [4] Deck Page D1	Min. Brace Anchorage [6] Metal [5] Deck Page D2	Max. [2] Brace Spacing (ft.)	Brace [3] Reaction P (lbs)	Min. Brace Assembly E - Pages	Min. Brace Anchorage [6] Form Pour [4] Deck Page D1	Min. Brace Anchorage [6] Metal [5] Deck Page D2
				2-Way Transverse Brace Pattern (B6.4, B6.5)					4-Way T/L Details (B7.0, B7.1, B7.2, B8.4)				
1 1/2	10	57	3/8	18	153	C38AA04WS	N2	L2	36	305	C38AA04WS	N4	L4
2	10	80	3/8	12	141	C38AA04WS	N2	L2	24	283	C38AA04WS	N3	L3
2 1/2	10	119	1/2	22	389	C12AA04WS	N4	L4	44	778	C12AA06WS	N8	L8
3	10	160	1/2	16	380	C12AA04WS	N4	L4	32	759	C12AA06WS	N8	L8
4	10	263	5/8	14	546	C58AA04WS	N6	L6	28	1,091	C58AA06WS	N11	L11
5	10	363	5/8	10	538	C58AA04WS	N6	L6	20	1,076	C58AA06WS	N11	L11
				TRANSVERSE, LONGITUDINAL BRACING REQUIREMENTS (SELECT EITHER T/L OR SPLAY)									
				4-Way T/L Details (B7.0, B7.1, B7.2, B8.4)					4-Way Splay Details (B9.0, B9.1, B9.1.1)				
1 1/2	10	57	3/8	23	198	C38AA04WS	N2	L2	23	198	C38AA04WS	N2	L2
2	10	80	3/8	26	310	C38AA04WS	N4	L4	26	310	C38AA04WS	N4	L4
2 1/2	10	119	1/2	30	529	C12AA04WS	N6	L6	30	529	C12AA04WS	N6	L6
3	10	160	1/2	33	774	C12AA06WS	N8	L8	33	774	C12AA06WS	N8	L8
4	10	263	5/8	30	1,169	C58AA06WS	N12	L12	30	1,169	C58AA06WS	N12	L12
5	10	363	5/8	22	1,183	C58AA06WS	N12	L12	22	1,183	C58AA06WS	N12	L12
6	10	482	5/8	16	1,143	C58AA06WS	N12	L12	16	1,143	C58AA06WS	N12	L12

1. TVL = DL + Fv + ($0.2S_{DS}$/1.4 x Wp). All Terms Are Working Loads.
2. Reductions In Actual Installed Brace Spacing Will Result In An Equal Percentage Reduction In Brace Reaction. As An Option When This Occurs ISAT May Substitute An Alternate Anchorage From Tables D1 or D2 Which Meets or Exceeds The Lowered Brace Reaction.
3. At Max. 60 Degree Brace Inclination.
4. Min. 3,000 psi NWC. Any "N Series" Connection May Be Utilized Having A Numeric Designation Equal To Or Higher Than That Shown.
5. Min. 3,000 psi NWC or LWC. Any "L Series" Connection May Be Utilized Having A Numeric Designation Equal To Or Higher Than That Shown.
6. As An Alternate, Brace Anchorage Connections To Structure May Be Employed Using Any Detail From Structural Connections Section "D" Series Details Where Assembly Design Value Meets Or Exceeds Brace Reaction.
7. For Trade Specific Bracing Installation Notes, Refer To Page 8.1. and 10.1
8. Utilize Any "G" Series Vertical Support Connection Having A Design Value Equal To Or Greater Than The Corresponding "Rod Total Vertical Load".
9. Based on Water Filled + Insulated Pipe Weight. Refer to X-Series Weight Charts.
10. Pipe Sizes 12" and Greater Are Sched STD

REGISTERED PROFESSIONAL ENGINEER MARCIN WASAZNIK S 6612 STRUCTURAL STATE OF CALIFORNIA

ISAT A Division of Tomarco Contractor Specialties

International Seismic Application Technology
14848 Northam Street, La Mirada, CA 90638
877-999-4728 (Toll Free) 714-523-0845 (Fax)
www.isatsb.com

Rev. 2
03/12/19
Page
C12-1-60

REVIEWED FOR CODE COMPLIANCE BY: OPM-0403 William Staehlin DATE: 01-26-2024 CALIFORNIA BUILDING CODE

RIGID BRACING REQUIREMENTS [7]

SINGLE HUNG PIPE CAST IRON PIPE (WATER FILLED) [9] — **MAXIMUM SEISMIC DESIGN FORCE = 0.25 G's**

Requires Use of ISAT Seismic Brackets. Use of Any Non-ISAT Bracket Voids Engineering. 2013 California Building Code Compliant

Maximum Pipe Diameter (in.)	Max. Vertical Support Spacing (ft.)	Rod [1] Total Vertical Load (lbs)	Min. [8] Vertical Support Rod Dia. (in.)	TRANSVERSE BRACING REQUIREMENTS: Max. [2] Brace Spacing (ft.)	Brace [3] Reaction P (lbs)	Min. Brace Assembly E - Pages	Min. Brace Anchorage [6]: Form Pour [4] Deck Page D1	Metal [5] Deck Page D2	LONGITUDINAL BRACING REQUIREMENTS: Max. [2] Brace Spacing (ft.)	Brace [3] Reaction P (lbs)	Min. Brace Assembly E - Pages	Min. Brace Anchorage [6]: Form Pour [4] Deck Page D1	Metal [5] Deck Page D2
				1-Way Transverse Brace Pattern (B1.4, B1.5)					**2-Way Trans., Longit. Brace Pattern (B3.0, B3.1)**				
2	8	86	3/8	20	29	R38AAEM306	N1	L1	40	58	R38AAEM306	N1	L1
3	8	146	1/2	24	58	R12AAEM306	N1	L1	40	96	R12AAEM306	N1	L1
4	8	225	5/8	25	91	R58AAEM306	N1	L1	40	148	R58AAEM306	N2	L2
5	8	313	5/8	23	121	R58AAEM306	N2	L2	40	207	R58AAEM306	N3	L3
6	8	406	5/8	23	157	R58AAEM306	N2	L2	40	268	R58AAEM306	N3	L3
				TRANSVERSE, LONGITUDINAL BRACING REQUIREMENTS									
				4-Way Splayed Brace Pattern (B4.14)									
2	8	54	3/8	20	20	R38AAEM306	N1	L1					
3	8	90	1/2	24	41	R12AAEM306	N1	L1					
4	8	138	5/8	25	64	R58AAEM306	N1	L1					
5	8	193	5/8	23	85	R58AAEM306	N1	L1					
6	8	251	5/8	23	111	R58AAEM306	N2	L2					

SINGLE HUNG PIPE CAST IRON PIPE (EMPTY) [10] — **MAXIMUM SEISMIC DESIGN FORCE = 0.25 G's**

				1-Way Transverse Brace Pattern (B1.4, B1.5)					**2-Way Trans., Longit. Brace Pattern (B3.0, B3.1)**				
2	8	64	3/8	26	27	R38AAEM306	N1	L1	40	42	R38AAEM306	N1	L1
3	8	94	1/2	31	46	R12AAEM306	N1	L1	40	60	R12AAEM306	N1	L1
4	8	135	5/8	32	69	R58AAEM306	N1	L1	40	85	R58AAEM306	N1	L1
5	8	171	5/8	32	88	R58AAEM306	N1	L1	40	109	R58AAEM306	N2	L2
6	8	202	5/8	34	108	R58AAEM306	N2	L2	40	127	R58AAEM306	N2	L2
				TRANSVERSE, LONGITUDINAL BRACING REQUIREMENTS									
				4-Way Splayed Brace Pattern (B4.14)									
2	8	39	3/8	26	19	R38AAEM306	N1	L1					
3	8	56	1/2	31	33	R12AAEM306	N1	L1					
4	8	80	5/8	32	49	R58AAEM306	N1	L1					
5	8	102	5/8	32	62	R58AAEM306	N1	L1					
6	8	119	5/8	34	77	R58AAEM306	N1	L1					

1. TVL = DL + Fv + ($0.2S_{DS}$/1.4 x Wp). All Terms Are Working Loads.
2. Reductions In Actual Installed Brace Spacing Will Result In An Equal Percentage Reduction In Brace Reaction. As An Option When This Occurs ISAT May Substitute An Alternate Anchorage From Tables D1 or D2 Which Meets or Exceeds The Lowered Brace Reaction.
3. At Max. 30 Degree Brace Inclination.
4. Min. 3,000 psi NWC. Any "N Series" Connection May Be Utilized Having A Numeric Designation Equal To Or Higher Than That Shown.
5. Min. 3,000 psi NWC or LWC. Any "L Series" Connection May Be Utilized Having A Numeric Designation Equal To Or Higher Than That Shown.
6. As An Alternate, Brace Anchorage Connections To Structure May Be Employed Using Any Detail From Structural Connections Section "D" Series Details Where Assembly Design Value Meets Or Exceeds Brace Reaction.
7. For Trade Specific Bracing Installation Notes, Refer To Page 10.1
8. Utilize Any "G" Series Vertical Support Connection Having A Design Value Equal To Or Greater Than The Corresponding "Rod Total Vertical Load".
9. Based on Water Filled Pipe Weight. Refer to X-Series Weight Charts.
10. Based on Empty Pipe Weight. Refer to X-Series Weight Charts.

REGISTERED PROFESSIONAL ENGINEER MARCIN WASAZNIK S 6612 STRUCTURAL STATE OF CALIFORNIA

ISAT
A Division of Tomarco Contractor Specialties
International Seismic Application Technology
14848 Northam Street, La Mirada, CA 90638
877-999-4728 (Toll Free) 714-523-0845 (Fax)
www.isatsb.com

01/26/2024 OPM-0403: Reviewed for Code Compliance by William Staehlin

RIGID BRACING REQUIREMENTS [7]

SINGLE HUNG PIPE CAST IRON PIPE (WATER FILLED) [9] — **MAXIMUM SEISMIC DESIGN FORCE = 0.25 G's**

Requires Use of ISAT Seismic Brackets. Use of Any Non-ISAT Bracket Voids Engineering. 2013 California Building Code Compliant

Maximum Pipe Diameter (in.)	Max. Vertical Support Spacing (ft.)	Rod [1] Total Vertical Load (lbs)	Min. [8] Vertical Support Rod Dia. (in.)	TRANSVERSE BRACING REQUIREMENTS: Max. [2] Brace Spacing (ft.)	Brace [3] Reaction P (lbs)	Min. Brace Assembly E - Pages	Min. Brace Anchorage [6]: Form Pour [4] Deck Page D1	Metal [5] Deck Page D2	LONGITUDINAL BRACING REQUIREMENTS: Max. [2] Brace Spacing (ft.)	Brace [3] Reaction P (lbs)	Min. Brace Assembly E - Pages	Min. Brace Anchorage [6]: Form Pour [4] Deck Page D1	Metal [5] Deck Page D2
				1-Way Transverse Brace Pattern (B1.4, B1.5)					**2-Way Trans., Longit. Brace Pattern (B3.0, B3.1)**				
2	8	120	3/8	20	39	R38AAEM306	N1	L1	40	77	R38AAEM306	N1	L1
3	8	205	1/2	24	78	R12AAEM306	N1	L1	40	129	R12AAEM306	N2	L2
4	8	317	5/8	25	123	R58AAEM306	N2	L2	40	199	R58AAEM306	N2	L2
5	8	440	5/8	23	163	R58AAEM306	N2	L2	40	278	R58AAEM306	N3	L3
6	8	571	5/8	23	212	R58AAEM306	N3	L3	40	361	R58AAEM406	N4	L4
				TRANSVERSE, LONGITUDINAL BRACING REQUIREMENTS									
				4-Way Splayed Brace Pattern (B4.14)									
2	8	54	3/8	20	27	R38AAEM306	N1	L1					
3	8	90	1/2	24	55	R12AAEM306	N1	L1					
4	8	138	5/8	25	87	R58AAEM306	N1	L1					
5	8	193	5/8	23	115	R58AAEM306	N2	L2					
6	8	251	5/8	23	150	R58AAEM306	N2	L2					

SINGLE HUNG PIPE CAST IRON PIPE (EMPTY) [10] — **MAXIMUM SEISMIC DESIGN FORCE = 0.25 G's**

				1-Way Transverse Brace Pattern (B1.4, B1.5)					**2-Way Trans., Longit. Brace Pattern (B3.0, B3.1)**				
2	8	90	3/8	26	36	R38AAEM306	N1	L1	40	56	R38AAEM306	N1	L1
3	8	134	1/2	31	62	R12AAEM306	N1	L1	40	81	R12AAEM306	N1	L1
4	8	194	5/8	32	94	R58AAEM306	N1	L1	40	115	R58AAEM306	N2	L2
5	8	245	5/8	32	118	R58AAEM306	N2	L2	40	146	R58AAEM306	N2	L2
6	8	291	5/8	34	146	R58AAEM306	N2	L2	40	171	R58AAEM306	N2	L2
				TRANSVERSE, LONGITUDINAL BRACING REQUIREMENTS									
				4-Way Splayed Brace Pattern (B4.14)									
2	8	39	3/8	26	26	R38AAEM306	N1	L1					
3	8	56	1/2	31	44	R12AAEM306	N1	L1					
4	8	80	5/8	32	66	R58AAEM306	N1	L1					
5	8	102	5/8	32	83	R58AAEM306	N1	L1					
6	8	119	5/8	34	103	R58AAEM306	N2	L2					

1. TVL = DL + Fv + ($0.2S_{DS}$/1.4 x Wp). All Terms Are Working Loads.
2. Reductions In Actual Installed Brace Spacing Will Result In An Equal Percentage Reduction In Brace Reaction. As An Option When This Occurs ISAT May Substitute An Alternate Anchorage From Tables D1 or D2 Which Meets or Exceeds The Lowered Brace Reaction.
3. At Max. 50 Degree Brace Inclination.
4. Min. 3,000 psi NWC. Any "N Series" Connection May Be Utilized Having A Numeric Designation Equal To Or Higher Than That Shown.
5. Min. 3,000 psi NWC or LWC. Any "L Series" Connection May Be Utilized Having A Numeric Designation Equal To Or Higher Than That Shown.
6. As An Alternate, Brace Anchorage Connections To Structure May Be Employed Using Any Detail From Structural Connections Section "D" Series Details Where Assembly Design Value Meets Or Exceeds Brace Reaction.
7. For Trade Specific Bracing Installation Notes, Refer To Page 10.1
8. Utilize Any "G" Series Vertical Support Connection Having A Design Value Equal To Or Greater Than The Corresponding "Rod Total Vertical Load".
9. Based on Water Filled Pipe Weight. Refer to X-Series Weight Charts.
10. Based on Empty Pipe Weight. Refer to X-Series Weight Charts.

REGISTERED PROFESSIONAL ENGINEER MARCIN WASAZNIK S-6612 STRUCTURAL STATE OF CALIFORNIA

ISAT
A Division of Tomarco Contractor Specialties
International Seismic Application Technology
14848 Northam Street, La Mirada, CA 90638
877-999-4728 (Toll Free) 714-523-0845 (Fax)
www.isatsb.com

Rev. 0
11/28/18

01/26/2024 OPM-0403: Reviewed for Code Compliance by William Staehlin
REVIEWED FOR CODE COMPLIANCE BY: William Staehlin DATE: 01-26-2024 CALIFORNIA BUILDING CODE 2022

RIGID BRACING REQUIREMENTS [7]

SINGLE HUNG PIPE CAST IRON PIPE (WATER FILLED) [9] — **MAXIMUM SEISMIC DESIGN FORCE = 0.25 G's**

Requires Use of ISAT Seismic Brackets. Use of Any Non-ISAT Bracket Voids Engineering. 2013 California Building Code Compliant

Maximum Pipe Diameter (in.)	Max. Vertical Support Spacing (ft.)	Rod [1] Total Vertical Load (lbs)	Min. [8] Vertical Support Rod Dia. (in.)	TRANSVERSE BRACING REQUIREMENTS: Max. [2] Brace Spacing (ft.)	Brace [3] Reaction P (lbs)	Min. Brace Assembly E - Pages	Min. Brace Anchorage [6]: Form Pour [4] Deck Page D1	Metal [5] Deck Page D2	LONGITUDINAL BRACING REQUIREMENTS: Max. [2] Brace Spacing (ft.)	Brace [3] Reaction P (lbs)	Min. Brace Assembly E - Pages	Min. Brace Anchorage [6]: Form Pour [4] Deck Page D1	Metal [5] Deck Page D2
				1-Way Transverse Brace Pattern (B1.4, B1.5)					**2-Way Trans., Longit. Brace Pattern (B3.0, B3.1)**				
2	8	150	3/8	20	50	R38AAEM306	N1	L1	40	100	R38AAEM306	N1	L1
3	8	258	1/2	24	101	R12AAEM306	N2	L2	40	166	R12AAEM306	N2	L2
4	8	399	5/8	25	158	R58AAEM306	N2	L2	40	256	R58AAEM306	N3	L3
5	8	552	5/8	23	209	R58AAEM306	N3	L3	40	358	R58AAEM406	N4	L4
6	8	717	5/8	23	273	R58AAEM306	N3	L3	40	464	R58AAEM406	N5	L5
				TRANSVERSE, LONGITUDINAL BRACING REQUIREMENTS									
				4-Way Splayed Brace Pattern (B4.14)									
2	8	54	3/8	20	35	R38AAEM306	N1	L1					
3	8	90	1/2	24	71	R12AAEM306	N1	L1					
4	8	138	5/8	25	112	R58AAEM306	N2	L2					
5	8	193	5/8	23	148	R58AAEM306	N2	L2					
6	8	251	5/8	23	193	R58AAEM306	N2	L2					

SINGLE HUNG PIPE CAST IRON PIPE (EMPTY) [10] — **MAXIMUM SEISMIC DESIGN FORCE = 0.25 G's**

				1-Way Transverse Brace Pattern (B1.4, B1.5)					**2-Way Trans., Longit. Brace Pattern (B3.0, B3.1)**				
2	8	113	3/8	26	47	R38AAEM306	N1	L1	40	72	R38AAEM306	N1	L1
3	8	170	1/2	31	80	R12AAEM306	N1	L1	40	104	R12AAEM306	N2	L2
4	8	245	5/8	32	120	R58AAEM306	N2	L2	40	148	R58AAEM306	N2	L2
5	8	311	5/8	32	152	R58AAEM306	N2	L2	40	188	R58AAEM306	N2	L2
6	8	369	5/8	34	188	R58AAEM306	N2	L2	40	220	R58AAEM306	N3	L3
				TRANSVERSE, LONGITUDINAL BRACING REQUIREMENTS									
				4-Way Splayed Brace Pattern (B4.14)									
2	8	39	3/8	26	33	R38AAEM306	N1	L1					
3	8	56	1/2	31	56	R12AAEM306	N1	L1					
4	8	80	5/8	32	85	R58AAEM306	N1	L1					
5	8	102	5/8	32	107	R58AAEM306	N2	L2					
6	8	119	5/8	34	133	R58AAEM306	N2	L2					

1. TVL = DL + Fv + ($0.2S_{DS}$/1.4 x Wp). All Terms Are Working Loads.
2. Reductions In Actual Installed Brace Spacing Will Result In An Equal Percentage Reduction In Brace Reaction. As An Option When This Occurs ISAT May Substitute An Alternate Anchorage From Tables D1 or D2 Which Meets or Exceeds The Lowered Brace Reaction.
3. At Max. 60 Degree Brace Inclination.
4. Min. 3,000 psi NWC. Any "N Series" Connection May Be Utilized Having A Numeric Designation Equal To Or Higher Than That Shown.
5. Min. 3,000 psi NWC or LWC. Any "L Series" Connection May Be Utilized Having A Numeric Designation Equal To Or Higher Than That Shown.
6. As An Alternate, Brace Anchorage Connections To Structure May Be Employed Using Any Detail From Structural Connections Section "D" Series Details Where Assembly Design Value Meets Or Exceeds Brace Reaction.
7. For Trade Specific Bracing Installation Notes, Refer To Page 10.1
8. Utilize Any "G" Series Vertical Support Connection Having A Design Value Equal To Or Greater Than The Corresponding "Rod Total Vertical Load".
9. Based on Water Filled Pipe Weight. Refer to X-Series Weight Charts.
10. Based on Empty Pipe Weight. Refer to X-Series Weight Charts.

REGISTERED PROFESSIONAL ENGINEER MARCIN WASAZNIK S-6612 STRUCTURAL STATE OF CALIFORNIA

ISAT
A Division of Tomarco Contractor Specialties
International Seismic Application Technology
14848 Northam Street, La Mirada, CA 90638
877-999-4728 (Toll Free) 714-523-0845 (Fax)
www.isatsb.com

Rev. 0
11/28/18

01/26/2024 OPM-0403: Reviewed for Code Compliance by William Staehlin

RIGID BRACING REQUIREMENTS [7]

SINGLE HUNG PIPE CAST IRON PIPE (WATER FILLED) [9] — **MAXIMUM SEISMIC DESIGN FORCE = 0.50 G's**

Requires Use of ISAT Seismic Brackets. Use of Any Non-ISAT Bracket Voids Engineering. 2013 California Building Code Compliant

Maximum Pipe Diameter (in.)	Max. Vertical Support Spacing (ft.)	Rod [1] Total Vertical Load (lbs)	Min. [8] Vertical Support Rod Dia. (in.)	TRANSVERSE BRACING REQUIREMENTS: Max. [2] Brace Spacing (ft.)	Brace [3] Reaction P (lbs)	Min. Brace Assembly E - Pages	Min. Brace Anchorage [6]: Form Pour [4] Deck Page D1	Metal [5] Deck Page D2	LONGITUDINAL BRACING REQUIREMENTS: Max. [2] Brace Spacing (ft.)	Brace [3] Reaction P (lbs)	Min. Brace Assembly E - Pages	Min. Brace Anchorage [6]: Form Pour [4] Deck Page D1	Metal [5] Deck Page D2
				1-Way Transverse Brace Pattern (B1.4, B1.5)					**2-Way Trans., Longit. Brace Pattern (B3.0, B3.1)**				
2	8	99	3/8	14	41	R38AAEM306	N1	L1	28	81	R38AAEM306	N1	L1
3	8	182	1/2	17	82	R12AAEM306	N1	L1	34	165	R12AAEM306	N2	L2
4	8	282	5/8	17	129	R58AAEM306	N2	L2	35	258	R58AAEM306	N3	L3
5	8	384	5/8	17	171	R58AAEM306	N2	L2	33	342	R58AAEM406	N4	L4
6	8	499	5/8	17	223	R58AAEM306	N3	L3	33	445	R58AAEM406	N5	L5
				TRANSVERSE, LONGITUDINAL BRACING REQUIREMENTS									
				4-Way Splayed Brace Pattern (B4.14)									
2	8	54	3/8	14	29	R38AAEM306	N1	L1					
3	8	90	1/2	17	58	R12AAEM306	N1	L1					
4	8	138	5/8	17	91	R58AAEM306	N1	L1					
5	8	193	5/8	17	121	R58AAEM306	N2	L2					
6	8	251	5/8	17	157	R58AAEM306	N2	L2					

SINGLE HUNG PIPE CAST IRON PIPE (EMPTY) [10] — **MAXIMUM SEISMIC DESIGN FORCE = 0.50 G's**

				1-Way Transverse Brace Pattern (B1.4, B1.5)					**2-Way Trans., Longit. Brace Pattern (B3.0, B3.1)**				
2	8	82	3/8	18	38	R38AAEM306	N1	L1	37	76	R38AAEM306	N1	L1
3	8	124	1/2	22	65	R12AAEM306	N1	L1	40	120	R12AAEM306	N2	L2
4	8	178	5/8	23	98	R58AAEM306	N1	L1	40	171	R58AAEM306	N2	L2
5	8	226	5/8	23	124	R58AAEM306	N2	L2	40	217	R58AAEM306	N3	L3
6	8	267	5/8	24	153	R58AAEM306	N2	L2	40	254	R58AAEM306	N3	L3
				TRANSVERSE, LONGITUDINAL BRACING REQUIREMENTS									
				4-Way Splayed Brace Pattern (B4.14)									
2	8	39	3/8	18	27	R38AAEM306	N1	L1					
3	8	56	1/2	22	46	R12AAEM306	N1	L1					
4	8	80	5/8	23	69	R58AAEM306	N1	L1					
5	8	102	5/8	23	88	R58AAEM306	N1	L1					
6	8	119	5/8	24	108	R58AAEM306	N2	L2					

1. TVL = DL + Fv + ($0.2S_{DS}$/1.4 x Wp). All Terms Are Working Loads.
2. Reductions In Actual Installed Brace Spacing Will Result In An Equal Percentage Reduction In Brace Reaction. As An Option When This Occurs ISAT May Substitute An Alternate Anchorage From Tables D1 or D2 Which Meets or Exceeds The Lowered Brace Reaction.
3. At Max. 30 Degree Brace Inclination.
4. Min. 3,000 psi NWC. Any "N Series" Connection May Be Utilized Having A Numeric Designation Equal To Or Higher Than That Shown.
5. Min. 3,000 psi NWC or LWC. Any "L Series" Connection May Be Utilized Having A Numeric Designation Equal To Or Higher Than That Shown.
6. As An Alternate, Brace Anchorage Connections To Structure May Be Employed Using Any Detail From Structural Connections Section "D" Series Details Where Assembly Design Value Meets Or Exceeds Brace Reaction.
7. For Trade Specific Bracing Installation Notes, Refer To Page 10.1
8. Utilize Any "G" Series Vertical Support Connection Having A Design Value Equal To Or Greater Than The Corresponding "Rod Total Vertical Load".
9. Based on Water Filled Pipe Weight. Refer to X-Series Weight Charts.
10. Based on Empty Pipe Weight. Refer to X-Series Weight Charts.

REGISTERED PROFESSIONAL ENGINEER MARCIN WASAZNIK S-6612 STRUCTURAL STATE OF CALIFORNIA

ISAT
A Division of Tomarco Contractor Specialties
International Seismic Application Technology
14848 Northam Street, La Mirada, CA 90638
877-999-4728 (Toll Free) 714-523-0845 (Fax)
www.isatsb.com

Rev. 0
11/28/18

01/26/2024 OPM-0403: Reviewed for Code Compliance by William Staehlin

RIGID BRACING REQUIREMENTS [7]

SINGLE HUNG PIPE CAST IRON PIPE (WATER FILLED) [9] — **MAXIMUM SEISMIC DESIGN FORCE = 0.50 G's**

Requires Use of ISAT Seismic Brackets. Use of Any Non-ISAT Bracket Voids Engineering. 2013 California Building Code Compliant

Maximum Pipe Diameter (in.)	Max. Vertical Support Spacing (ft.)	Rod [1] Total Vertical Load (lbs)	Min. [8] Vertical Support Rod Dia. (in.)	TRANSVERSE BRACING REQUIREMENTS: Max. [2] Brace Spacing (ft.)	Brace [3] Reaction P (lbs)	Min. Brace Assembly E - Pages	Min. Brace Anchorage [6]: Form Pour [4] Deck Page D1	Metal [5] Deck Page D2	LONGITUDINAL BRACING REQUIREMENTS: Max. [2] Brace Spacing (ft.)	Brace [3] Reaction P (lbs)	Min. Brace Assembly E - Pages	Min. Brace Anchorage [6]: Form Pour [4] Deck Page D1	Metal [5] Deck Page D2
				1-Way Transverse Brace Pattern (B1.4, B1.5)					**2-Way Trans., Longit. Brace Pattern (B3.0, B3.1)**				
2	8	148	3/8	14	55	R38AAEM306	N1	L1	28	110	R38AAEM306	N2	L2
3	8	280	1/2	17	111	R12AAEM306	N2	L2	34	222	R12AAEM306	N3	L3
4	8	436	5/8	17	174	R58AAEM306	N2	L2	35	347	R58AAEM406	N4	L4
5	8	588	5/8	17	230	R58AAEM306	N3	L3	33	460	R58AAEM406	N5	L5
6	8	764	5/8	17	300	R58AAEM306	N3	L3	33	600	R58AAEM406	N6	L6
				TRANSVERSE, LONGITUDINAL BRACING REQUIREMENTS									
				4-Way Splayed Brace Pattern (B4.14)									
2	8	54	3/8	14	39	R38AAEM306	N1	L1					
3	8	90	1/2	17	78	R12AAEM306	N1	L1					
4	8	138	5/8	17	123	R58AAEM306	N2	L2					
5	8	193	5/8	17	163	R58AAEM306	N2	L2					
6	8	251	5/8	17	212	R58AAEM306	N3	L3					

SINGLE HUNG PIPE CAST IRON PIPE (EMPTY) [10] — **MAXIMUM SEISMIC DESIGN FORCE = 0.50 G's**

				1-Way Transverse Brace Pattern (B1.4, B1.5)					**2-Way Trans., Longit. Brace Pattern (B3.0, B3.1)**				
2	8	127	3/8	18	52	R38AAEM306	N1	L1	37	103	R38AAEM306	N2	L2
3	8	197	1/2	22	88	R12AAEM306	N1	L1	40	162	R12AAEM306	N2	L2
4	8	283	5/8	23	132	R58AAEM306	N2	L2	40	230	R58AAEM306	N3	L3
5	8	359	5/8	23	167	R58AAEM306	N2	L2	40	292	R58AAEM306	N3	L3
6	8	425	5/8	24	207	R58AAEM306	N3	L3	40	342	R58AAEM406	N4	L4
				TRANSVERSE, LONGITUDINAL BRACING REQUIREMENTS									
				4-Way Splayed Brace Pattern (B4.14)									
2	8	39	3/8	18	36	R38AAEM306	N1	L1					
3	8	56	1/2	22	62	R12AAEM306	N1	L1					
4	8	80	5/8	23	94	R58AAEM306	N1	L1					
5	8	102	5/8	23	118	R58AAEM306	N2	L2					
6	8	119	5/8	24	146	R58AAEM306	N2	L2					

1. TVL = DL + Fv + ($0.2S_{DS}$/1.4 x Wp). All Terms Are Working Loads.
2. Reductions In Actual Installed Brace Spacing Will Result In An Equal Percentage Reduction In Brace Reaction. As An Option When This Occurs ISAT May Substitute An Alternate Anchorage From Tables D1 or D2 Which Meets or Exceeds The Lowered Brace Reaction.
3. At Max. 50 Degree Brace Inclination.
4. Min. 3,000 psi NWC. Any "N Series" Connection May Be Utilized Having A Numeric Designation Equal To Or Higher Than That Shown.
5. Min. 3,000 psi NWC or LWC. Any "L Series" Connection May Be Utilized Having A Numeric Designation Equal To Or Higher Than That Shown.
6. As An Alternate, Brace Anchorage Connections To Structure May Be Employed Using Any Detail From Structural Connections Section "D" Series Details Where Assembly Design Value Meets Or Exceeds Brace Reaction.
7. For Trade Specific Bracing Installation Notes, Refer To Page 10.1
8. Utilize Any "G" Series Vertical Support Connection Having A Design Value Equal To Or Greater Than The Corresponding "Rod Total Vertical Load".
9. Based on Water Filled Pipe Weight. Refer to X-Series Weight Charts.
10. Based on Empty Pipe Weight. Refer to X-Series Weight Charts.

REGISTERED PROFESSIONAL ENGINEER MARCIN WASAZNIK S-6612 STRUCTURAL STATE OF CALIFORNIA

ISAT
A Division of Tomarco Contractor Specialties
International Seismic Application Technology
14848 Northam Street, La Mirada, CA 90638
877-999-4728 (Toll Free) 714-523-0845 (Fax)
www.isatsb.com

Rev. 0
11/28/18

REVIEWED FOR CODE COMPLIANCE BY: OPM-0403 DATE: 01-26-2024 CALIFORNIA BUILDING CODE, 2022

RIGID BRACING REQUIREMENTS [7]

SINGLE HUNG PIPE CAST IRON PIPE (WATER FILLED) [9] — **MAXIMUM SEISMIC DESIGN FORCE = 0.50 G's**

Requires Use of ISAT Seismic Brackets. Use of Any Non-ISAT Bracket Voids Engineering. 2013 California Building Code Compliant

Maximum Pipe Diameter (in.)	Max. Vertical Support Spacing (ft.)	Rod [1] Total Vertical Load (lbs)	Min. [8] Vertical Support Rod Dia. (in.)	TRANSVERSE BRACING REQUIREMENTS: Max. [2] Brace Spacing (ft.)	Brace [3] Reaction P (lbs)	Min. Brace Assembly E - Pages	Min. Brace Anchorage [6]: Form Pour [4] Deck Page D1	Metal [5] Deck Page D2	LONGITUDINAL BRACING REQUIREMENTS: Max. [2] Brace Spacing (ft.)	Brace [3] Reaction P (lbs)	Min. Brace Assembly E - Pages	Min. Brace Anchorage [6]: Form Pour [4] Deck Page D1	Metal [5] Deck Page D2
				1-Way Transverse Brace Pattern (B1.4, B1.5)					**2-Way Trans., Longit. Brace Pattern (B3.0, B3.1)**				
2	8	190	3/8	14	70	R38AAEM306	N1	L1	28	141	R38AAEM306	N2	L2
3	8	366	1/2	17	143	R12AAEM306	N2	L2	34	285	R12AAEM306	N3	L3
4	8	571	5/8	17	223	R58AAEM306	N3	L3	35	447	R58AAEM406	N5	L5
5	8	766	5/8	17	296	R58AAEM306	N3	L3	33	592	R58AAEM406	N6	L6
6	8	997	5/8	17	385	R58AAEM406	N4	L4	33	771	R58AAEM509	N8	L8
				TRANSVERSE, LONGITUDINAL BRACING REQUIREMENTS									
				4-Way Splayed Brace Pattern (B4.14)									
2	8	54	3/8	14	50	R38AAEM306	N1	L1					
3	8	90	1/2	17	101	R12AAEM306	N2	L2					
4	8	138	5/8	17	158	R58AAEM306	N2	L2					
5	8	193	5/8	17	209	R58AAEM306	N3	L3					
6	8	251	5/8	17	273	R58AAEM306	N3	L3					

SINGLE HUNG PIPE CAST IRON PIPE (EMPTY) [10] — **MAXIMUM SEISMIC DESIGN FORCE = 0.50 G's**

				1-Way Transverse Brace Pattern (B1.4, B1.5)					**2-Way Trans., Longit. Brace Pattern (B3.0, B3.1)**				
2	8	167	3/8	18	66	R38AAEM306	N1	L1	37	132	R38AAEM306	N2	L2
3	8	261	1/2	22	113	R12AAEM306	N2	L2	40	208	R12AAEM306	N3	L3
4	8	376	5/8	23	170	R58AAEM306	N2	L2	40	296	R58AAEM306	N3	L3
5	8	476	5/8	23	214	R58AAEM306	N3	L3	40	376	R58AAEM406	N4	L4
6	8	564	5/8	24	266	R58AAEM306	N3	L3	40	440	R58AAEM406	N5	L5
				TRANSVERSE, LONGITUDINAL BRACING REQUIREMENTS									
				4-Way Splayed Brace Pattern (B4.14)									
2	8	39	3/8	18	47	R38AAEM306	N1	L1					
3	8	56	1/2	22	80	R12AAEM306	N1	L1					
4	8	80	5/8	23	120	R58AAEM306	N2	L2					
5	8	102	5/8	23	152	R58AAEM306	N2	L2					
6	8	119	5/8	24	188	R58AAEM306	N2	L2					

1. TVL = DL + Fv + ($0.2S_{DS}$/1.4 x Wp). All Terms Are Working Loads.
2. Reductions In Actual Installed Brace Spacing Will Result In An Equal Percentage Reduction In Brace Reaction. As An Option When This Occurs ISAT May Substitute An Alternate Anchorage From Tables D1 or D2 Which Meets or Exceeds The Lowered Brace Reaction.
3. At Max. 60 Degree Brace Inclination.
4. Min. 3,000 psi NWC. Any "N Series" Connection May Be Utilized Having A Numeric Designation Equal To Or Higher Than That Shown.
5. Min. 3,000 psi NWC or LWC. Any "L Series" Connection May Be Utilized Having A Numeric Designation Equal To Or Higher Than That Shown.
6. As An Alternate, Brace Anchorage Connections To Structure May Be Employed Using Any Detail From Structural Connections Section "D" Series Details Where Assembly Design Value Meets Or Exceeds Brace Reaction.
7. For Trade Specific Bracing Installation Notes, Refer To Page 10.1
8. Utilize Any "G" Series Vertical Support Connection Having A Design Value Equal To Or Greater Than The Corresponding "Rod Total Vertical Load".
9. Based on Water Filled Pipe Weight. Refer to X-Series Weight Charts.
10. Based on Empty Pipe Weight. Refer to X-Series Weight Charts.

REGISTERED PROFESSIONAL ENGINEER MARCIN WASAZNIK S-6612 STRUCTURAL STATE OF CALIFORNIA

ISAT
A Division of Tomarco Contractor Specialties
International Seismic Application Technology
14848 Northam Street, La Mirada, CA 90638
877-999-4728 (Toll Free) 714-523-0845 (Fax)
www.isatsb.com

Rev. 0
11/28/18

01/26/2024 OPM-0403: Reviewed for Code Compliance by William Staehlin

RIGID BRACING REQUIREMENTS [7]

SINGLE HUNG PIPE CAST IRON PIPE (WATER FILLED) [9] — **MAXIMUM SEISMIC DESIGN FORCE = 0.75 G's**

Requires Use of ISAT Seismic Brackets. Use of Any Non-ISAT Bracket Voids Engineering. 2013 California Building Code Compliant

Maximum Pipe Diameter (in.)	Max. Vertical Support Spacing (ft.)	Rod [1] Total Vertical Load (lbs)	Min. [8] Vertical Support Rod Dia. (in.)	TRANSVERSE BRACING REQUIREMENTS: Max. [2] Brace Spacing (ft.)	Brace [3] Reaction P (lbs)	Min. Brace Assembly E - Pages	Min. Brace Anchorage [6]: Form Pour [4] Deck Page D1	Metal [5] Deck Page D2	LONGITUDINAL BRACING REQUIREMENTS: Max. [2] Brace Spacing (ft.)	Brace [3] Reaction P (lbs)	Min. Brace Assembly E - Pages	Min. Brace Anchorage [6]: Form Pour [4] Deck Page D1	Metal [5] Deck Page D2
				1-Way Transverse Brace Pattern (B1.4, B1.5)					**2-Way Trans., Longit. Brace Pattern (B3.0, B3.1)**				
2	8	110	3/8	12	50	R38AAEM306	N1	L1	23	100	R38AAEM306	N1	L1
3	8	202	1/2	14	101	R12AAEM306	N2	L2	28	202	R12AAEM306	N3	L3
4	8	315	5/8	14	158	R58AAEM306	N2	L2	28	316	R58AAEM409	N4	L4
5	8	427	5/8	13	209	R58AAEM306	N3	L3	27	419	R58AAEM406	N5	L5
6	8	555	5/8	14	273	R58AAEM306	N3	L3	27	545	R58AAEM406	N6	L6
				TRANSVERSE, LONGITUDINAL BRACING REQUIREMENTS									
				4-Way Splayed Brace Pattern (B4.14)									
2	8	54	3/8	12	35	R38AAEM306	N1	L1					
3	8	90	1/2	14	71	R12AAEM306	N1	L1					
4	8	138	5/8	14	112	R58AAEM306	N2	L2					
5	8	193	5/8	13	148	R58AAEM306	N2	L2					
6	8	251	5/8	14	193	R58AAEM306	N2	L2					

SINGLE HUNG PIPE CAST IRON PIPE (EMPTY) [10] — **MAXIMUM SEISMIC DESIGN FORCE = 0.75 G's**

				1-Way Transverse Brace Pattern (B1.4, B1.5)					**2-Way Trans., Longit. Brace Pattern (B3.0, B3.1)**				
2	8	91	3/8	15	47	R38AAEM306	N1	L1	30	94	R38AAEM306	N1	L1
3	8	145	1/2	18	80	R12AAEM306	N1	L1	35	159	R12AAEM306	N2	L2
4	8	214	5/8	19	120	R58AAEM306	N2	L2	38	240	R58AAEM306	N3	L3
5	8	271	5/8	19	152	R58AAEM306	N2	L2	37	303	R58AAEM409	N4	L4
6	8	329	5/8	20	188	R58AAEM306	N2	L2	39	376	R58AAEM406	N4	L4
				TRANSVERSE, LONGITUDINAL BRACING REQUIREMENTS									
				4-Way Splayed Brace Pattern (B4.14)									
2	8	39	3/8	15	33	R38AAEM306	N1	L1					
3	8	56	1/2	18	56	R12AAEM306	N1	L1					
4	8	80	5/8	19	85	R58AAEM306	N1	L1					
5	8	102	5/8	19	107	R58AAEM306	N2	L2					
6	8	119	5/8	20	133	R58AAEM306	N2	L2					

1. TVL = DL + Fv + ($0.2S_{DS}$/1.4 x Wp). All Terms Are Working Loads.
2. Reductions In Actual Installed Brace Spacing Will Result In An Equal Percentage Reduction In Brace Reaction. As An Option When This Occurs ISAT May Substitute An Alternate Anchorage From Tables D1 or D2 Which Meets or Exceeds The Lowered Brace Reaction.
3. At Max. 30 Degree Brace Inclination.
4. Min. 3,000 psi NWC. Any "N Series" Connection May Be Utilized Having A Numeric Designation Equal To Or Higher Than That Shown.
5. Min. 3,000 psi NWC or LWC. Any "L Series" Connection May Be Utilized Having A Numeric Designation Equal To Or Higher Than That Shown.
6. As An Alternate, Brace Anchorage Connections To Structure May Be Employed Using Any Detail From Structural Connections Section "D" Series Details Where Assembly Design Value Meets Or Exceeds Brace Reaction.
7. For Trade Specific Bracing Installation Notes, Refer To Page 10.1
8. Utilize Any "G" Series Vertical Support Connection Having A Design Value Equal To Or Greater Than The Corresponding "Rod Total Vertical Load".
9. Based on Water Filled Pipe Weight. Refer to X-Series Weight Charts.
10. Based on Empty Pipe Weight. Refer to X-Series Weight Charts.

REGISTERED PROFESSIONAL ENGINEER MARCIN WASAZNIK S-6612 STRUCTURAL STATE OF CALIFORNIA

ISAT
A Division of Tomarco Contractor Specialties
International Seismic Application Technology
14848 Northam Street, La Mirada, CA 90638
877-999-4728 (Toll Free) 714-523-0845 (Fax)
www.isatsb.com

Rev. 0
11/28/18

REVIEWED FOR CODE COMPLIANCE
OPM-0403
BY: William Staehlin
DATE: 01-26-2024
CALIFORNIA BUILDING CODE, 2022

RIGID BRACING REQUIREMENTS [7]

SINGLE HUNG PIPE CAST IRON PIPE (WATER FILLED) [9] — **MAXIMUM SEISMIC DESIGN FORCE = 0.75 G's**

Requires Use of ISAT Seismic Brackets. Use of Any Non-ISAT Bracket Voids Engineering. *2013 California Building Code Compliant*

Maximum Pipe Diameter (in.)	Max. Vertical Support Spacing (ft.)	Rod [1] Total Vertical Load (lbs)	Min. [8] Vertical Support Rod Dia. (in.)	TRANSVERSE BRACING REQUIREMENTS: Max. [2] Brace Spacing (ft.)	Brace [3] Reaction P (lbs)	Min. Brace Assembly E - Pages	Min. Brace Anchorage [6]: Form Pour [4] Deck Page D1	Metal [5] Deck Page D2	LONGITUDINAL BRACING REQUIREMENTS: Max. [2] Brace Spacing (ft.)	Brace [3] Reaction P (lbs)	Min. Brace Assembly E - Pages	Min. Brace Anchorage [6]: Form Pour [4] Deck Page D1	Metal [5] Deck Page D2
				1-Way Transverse Brace Pattern (B1.4, B1.5)					**2-Way Trans., Longit. Brace Pattern (B3.0, B3.1)**				
2	8	169	3/8	12	67	R38AAEM306	N1	L1	23	134	R38AAEM306	N2	L2
3	8	322	1/2	14	136	R12AAEM306	N2	L2	28	272	R12AAEM306	N3	L3
4	8	503	5/8	14	213	R58AAEM306	N3	L3	28	425	R58AAEM406	N5	L5
5	8	676	5/8	13	282	R58AAEM306	N3	L3	27	564	R58AAEM406	N6	L6
6	8	880	5/8	14	367	R58AAEM406	N4	L4	27	734	R58AAEM509	N8	L8
				TRANSVERSE, LONGITUDINAL BRACING REQUIREMENTS									
				4-Way Splayed Brace Pattern (B4.14)									
2	8	54	3/8	12	47	R38AAEM306	N1	L1					
3	8	90	1/2	14	96	R12AAEM306	N1	L1					
4	8	138	5/8	14	150	R58AAEM306	N2	L2					
5	8	193	5/8	13	199	R58AAEM306	N2	L2					
6	8	251	5/8	14	260	R58AAEM306	N3	L3					

SINGLE HUNG PIPE CAST IRON PIPE (EMPTY) [10] — **MAXIMUM SEISMIC DESIGN FORCE = 0.75 G's**

				1-Way Transverse Brace Pattern (B1.4, B1.5)					**2-Way Trans., Longit. Brace Pattern (B3.0, B3.1)**				
2	8	147	3/8	15	63	R38AAEM306	N1	L1	30	126	R38AAEM306	N2	L2
3	8	240	1/2	18	107	R12AAEM306	N2	L2	35	215	R12AAEM306	N3	L3
4	8	357	5/8	19	162	R58AAEM306	N2	L2	38	324	R58AAEM409	N4	L4
5	8	452	5/8	19	204	R58AAEM306	N3	L3	37	409	R58AAEM406	N5	L5
6	8	552	5/8	20	253	R58AAEM306	N3	L3	39	506	R58AAEM406	N6	L6
				TRANSVERSE, LONGITUDINAL BRACING REQUIREMENTS									
				4-Way Splayed Brace Pattern (B4.14)									
2	8	39	3/8	15	45	R38AAEM306	N1	L1					
3	8	56	1/2	18	76	R12AAEM306	N1	L1					
4	8	80	5/8	19	115	R58AAEM306	N2	L2					
5	8	102	5/8	19	144	R58AAEM306	N2	L2					
6	8	119	5/8	20	179	R58AAEM306	N2	L2					

1. TVL = DL + Fv + ($0.2S_{DS}$/1.4 x Wp). All Terms Are Working Loads.
2. Reductions In Actual Installed Brace Spacing Will Result In An Equal Percentage Reduction In Brace Reaction. As An Option When This Occurs ISAT May Substitute An Alternate Anchorage From Tables D1 or D2 Which Meets or Exceeds The Lowered Brace Reaction.
3. At Max. 50 Degree Brace Inclination.
4. Min. 3,000 psi NWC. Any "N Series" Connection May Be Utilized Having A Numeric Designation Equal To Or Higher Than That Shown.
5. Min. 3,000 psi NWC or LWC. Any "L Series" Connection May Be Utilized Having A Numeric Designation Equal To Or Higher Than That Shown.
6. As An Alternate, Brace Anchorage Connections To Structure May Be Employed Using Any Detail From Structural Connections Section "D" Series Details Where Assembly Design Value Meets Or Exceeds Brace Reaction.
7. For Trade Specific Bracing Installation Notes, Refer To Page 10.1
8. Utilize Any "G" Series Vertical Support Connection Having A Design Value Equal To Or Greater Than The Corresponding "Rod Total Vertical Load".
9. Based on Water Filled Pipe Weight. Refer to X-Series Weight Charts.
10. Based on Empty Pipe Weight. Refer to X-Series Weight Charts.

REGISTERED PROFESSIONAL ENGINEER MARCIN WASAZNIK S-6612 STRUCTURAL STATE OF CALIFORNIA

ISAT
A Division of Tomarco Contractor Specialties
International Seismic Application Technology
14848 Northam Street, La Mirada, CA 90638
877-999-4728 (Toll Free) 714-523-0845 (Fax)
www.isatsb.com

Rev. 0
11/28/18

REVIEWED FOR CODE COMPLIANCE BY: OPM-0403 DATE: 01-26-2024 CALIFORNIA BUILDING CODE, 2019
01/26/2024 OPM-0403: Reviewed for Code Compliance by William Staehlin
C13-0.75-45
2013 CBC OSHPD

RIGID BRACING REQUIREMENTS [7]

SINGLE HUNG PIPE CAST IRON PIPE (WATER FILLED) [9] — **MAXIMUM SEISMIC DESIGN FORCE = 0.75 G's**

Requires Use of ISAT Seismic Brackets. Use of Any Non-ISAT Bracket Voids Engineering. 2013 California Building Code Compliant

Maximum Pipe Diameter (in.)	Max. Vertical Support Spacing (ft.)	Rod [1] Total Vertical Load (lbs)	Min. [8] Vertical Support Rod Dia. (in.)	TRANSVERSE BRACING REQUIREMENTS: Max. [2] Brace Spacing (ft.)	Brace [3] Reaction P (lbs)	Min. Brace Assembly E - Pages	Min. Brace Anchorage [6]: Form Pour [4] Deck Page D1	Metal [5] Deck Page D2	LONGITUDINAL BRACING REQUIREMENTS: Max. [2] Brace Spacing (ft.)	Brace [3] Reaction P (lbs)	Min. Brace Assembly E - Pages	Min. Brace Anchorage [6]: Form Pour [4] Deck Page D1	Metal [5] Deck Page D2
				1-Way Transverse Brace Pattern (B1.4, B1.5)					**2-Way Trans., Longit. Brace Pattern (B3.0, B3.1)**				
2	8	221	3/8	12	86	R38AAEM306	N1	L1	23	173	R38AAEM306	N2	L2
3	8	428	1/2	14	175	R12AAEM306	N2	L2	28	349	R12AAEM406	N4	L4
4	8	668	5/8	14	273	R58AAEM306	N3	L3	28	547	R58AAEM406	N6	L6
5	8	895	5/8	13	362	R58AAEM406	N4	L4	27	725	R58AAEM509	N8	L8
6	8	1,165	5/8	14	472	R58AAEM406	N5	L5	27	944	R58AAEM506	N10	L10
				TRANSVERSE, LONGITUDINAL BRACING REQUIREMENTS									
				4-Way Splayed Brace Pattern (B4.14)									
2	8	54	3/8	12	61	R38AAEM306	N1	L1					
3	8	90	1/2	14	124	R12AAEM306	N2	L2					
4	8	138	5/8	14	193	R58AAEM306	N2	L2					
5	8	193	5/8	13	256	R58AAEM306	N3	L3					
6	8	251	5/8	14	334	R58AAEM406	N4	L4					

SINGLE HUNG PIPE CAST IRON PIPE (EMPTY) [10] — **MAXIMUM SEISMIC DESIGN FORCE = 0.75 G's**

				1-Way Transverse Brace Pattern (B1.4, B1.5)					**2-Way Trans., Longit. Brace Pattern (B3.0, B3.1)**				
2	8	196	3/8	15	81	R38AAEM306	N1	L1	30	162	R38AAEM306	N2	L2
3	8	323	1/2	18	138	R12AAEM306	N2	L2	35	276	R12AAEM306	N3	L3
4	8	483	5/8	19	208	R58AAEM306	N3	L3	38	416	R58AAEM406	N5	L5
5	8	610	5/8	19	263	R58AAEM306	N3	L3	37	525	R58AAEM406	N6	L6
6	8	749	5/8	20	325	R58AAEM409	N4	L4	39	651	R58AAEM406	N7	L7
				TRANSVERSE, LONGITUDINAL BRACING REQUIREMENTS									
				4-Way Splayed Brace Pattern (B4.14)									
2	8	39	3/8	15	57	R38AAEM306	N1	L1					
3	8	56	1/2	18	98	R12AAEM306	N1	L1					
4	8	80	5/8	19	147	R58AAEM306	N2	L2					
5	8	102	5/8	19	186	R58AAEM306	N2	L2					
6	8	119	5/8	20	230	R58AAEM306	N3	L3					

1. TVL = DL + Fv + ($0.2S_{DS}$/1.4 x Wp). All Terms Are Working Loads.
2. Reductions In Actual Installed Brace Spacing Will Result In An Equal Percentage Reduction In Brace Reaction. As An Option When This Occurs ISAT May Substitute An Alternate Anchorage From Tables D1 or D2 Which Meets or Exceeds The Lowered Brace Reaction.
3. At Max. 60 Degree Brace Inclination.
4. Min. 3,000 psi NWC. Any "N Series" Connection May Be Utilized Having A Numeric Designation Equal To Or Higher Than That Shown.
5. Min. 3,000 psi NWC or LWC. Any "L Series" Connection May Be Utilized Having A Numeric Designation Equal To Or Higher Than That Shown.
6. As An Alternate, Brace Anchorage Connections To Structure May Be Employed Using Any Detail From Structural Connections Section "D" Series Details Where Assembly Design Value Meets Or Exceeds Brace Reaction.
7. For Trade Specific Bracing Installation Notes, Refer To Page 10.1
8. Utilize Any "G" Series Vertical Support Connection Having A Design Value Equal To Or Greater Than The Corresponding "Rod Total Vertical Load".
9. Based on Water Filled Pipe Weight. Refer to X-Series Weight Charts.
10. Based on Empty Pipe Weight. Refer to X-Series Weight Charts.

REGISTERED PROFESSIONAL ENGINEER MARCIN WASAZNIK S-6612 STRUCTURAL STATE OF CALIFORNIA

ISAT
A Division of Tomarco Contractor Specialties
International Seismic Application Technology
14848 Northam Street, La Mirada, CA 90638
877-999-4728 (Toll Free) 714-523-0845 (Fax)
www.isatsb.com

Rev. 0
11/28/18

C13-0.75-60

2013 CBC OSHPD

01/26/2024 OPM-0403: Reviewed for Code Compliance by William Staehlin

RIGID BRACING REQUIREMENTS [7]

SINGLE HUNG PIPE CAST IRON PIPE (WATER FILLED) [9] — **MAXIMUM SEISMIC DESIGN FORCE = 1.00 G's**

Requires Use of ISAT Seismic Brackets. Use of Any Non-ISAT Bracket Voids Engineering. 2013 California Building Code Compliant

Maximum Pipe Diameter (in.)	Max. Vertical Support Spacing (ft.)	Rod [1] Total Vertical Load (lbs)	Min. [8] Vertical Support Rod Dia. (in.)	TRANSVERSE BRACING REQUIREMENTS: Max. [2] Brace Spacing (ft.)	Brace [3] Reaction P (lbs)	Min. Brace Assembly E - Pages	Min. Brace Anchorage [6]: Form Pour [4] Deck Page D1	Min. Brace Anchorage [6]: Metal [5] Deck Page D2	LONGITUDINAL BRACING REQUIREMENTS: Max. [2] Brace Spacing (ft.)	Brace [3] Reaction P (lbs)	Min. Brace Assembly E - Pages	Min. Brace Anchorage [6]: Form Pour [4] Deck Page D1	Min. Brace Anchorage [6]: Metal [5] Deck Page D2
				1-Way Transverse Brace Pattern (B1.4, B1.5)					**2-Way Trans., Longit. Brace Pattern (B3.0, B3.1)**				
2	8	112	3/8	10	58	R38AAEM306	N1	L1	17	101	R38AAEM306	N2	L2
3	8	207	1/2	12	116	R12AAEM306	N2	L2	21	205	R12AAEM306	N3	L3
4	8	334	5/8	12	182	R58AAEM306	N2	L2	23	347	R58AAEM406	N4	L4
5	8	463	5/8	12	242	R58AAEM306	N3	L3	23	483	R58AAEM406	N5	L5
6	8	602	5/8	12	315	R58AAEM409	N4	L4	23	629	R58AAEM406	N7	L7
				TRANSVERSE, LONGITUDINAL BRACING REQUIREMENTS									
				4-Way Splayed Brace Pattern (B4.14)									
2	8	54	3/8	10	41	R38AAEM306	N1	L1					
3	8	90	1/2	12	82	R12AAEM306	N1	L1					
4	8	138	5/8	12	129	R58AAEM306	N2	L2					
5	8	193	5/8	12	171	R58AAEM306	N2	L2					
6	8	251	5/8	12	223	R58AAEM306	N3	L3					

SINGLE HUNG PIPE CAST IRON PIPE (EMPTY) [10] — **MAXIMUM SEISMIC DESIGN FORCE = 1.00 G's**

				1-Way Transverse Brace Pattern (B1.4, B1.5)					**2-Way Trans., Longit. Brace Pattern (B3.0, B3.1)**				
2	8	96	3/8	13	54	R38AAEM306	N1	L1	24	100	R38AAEM306	N2	L2
3	8	159	1/2	15	92	R12AAEM306	N1	L1	31	184	R12AAEM306	N2	L2
4	8	235	5/8	16	139	R58AAEM306	N2	L2	32	278	R58AAEM306	N3	L3
5	8	297	5/8	16	175	R58AAEM306	N2	L2	32	350	R58AAEM406	N4	L4
6	8	361	5/8	17	217	R58AAEM306	N3	L3	34	434	R58AAEM406	N5	L5
				TRANSVERSE, LONGITUDINAL BRACING REQUIREMENTS									
				4-Way Splayed Brace Pattern (B4.14)									
2	8	39	3/8	13	38	R38AAEM306	N1	L1					
3	8	56	1/2	15	65	R12AAEM306	N1	L1					
4	8	80	5/8	16	98	R58AAEM306	N1	L1					
5	8	102	5/8	16	124	R58AAEM306	N2	L2					
6	8	119	5/8	17	153	R58AAEM306	N2	L2					

1. TVL = DL + Fv + ($0.2S_{DS}$/1.4 x Wp). All Terms Are Working Loads.
2. Reductions In Actual Installed Brace Spacing Will Result In An Equal Percentage Reduction In Brace Reaction. As An Option When This Occurs ISAT May Substitute An Alternate Anchorage From Tables D1 or D2 Which Meets or Exceeds The Lowered Brace Reaction.
3. At Max. 30 Degree Brace Inclination.
4. Min. 3,000 psi NWC. Any "N Series" Connection May Be Utilized Having A Numeric Designation Equal To Or Higher Than That Shown.
5. Min. 3,000 psi NWC or LWC. Any "L Series" Connection May Be Utilized Having A Numeric Designation Equal To Or Higher Than That Shown.
6. As An Alternate, Brace Anchorage Connections To Structure May Be Employed Using Any Detail From Structural Connections Section "D" Series Details Where Assembly Design Value Meets Or Exceeds Brace Reaction.
7. For Trade Specific Bracing Installation Notes, Refer To Page 10.1
8. Utilize Any "G" Series Vertical Support Connection Having A Design Value Equal To Or Greater Than The Corresponding "Rod Total Vertical Load".
9. Based on Water Filled Pipe Weight. Refer to X-Series Weight Charts.
10. Based on Empty Pipe Weight. Refer to X-Series Weight Charts.

REGISTERED PROFESSIONAL ENGINEER MARCIN WASAZNIK S-6612 STRUCTURAL STATE OF CALIFORNIA

ISAT
A Division of Tomarco Contractor Specialties
International Seismic Application Technology
14848 Northam Street, La Mirada, CA 90638
877-999-4728 (Toll Free) 714-523-0845 (Fax)
www.isatsb.com

Rev. 0
12/11/18

REVIEWED FOR CODE COMPLIANCE BY: OPM-0403 DATE: 01-26-2024 CALIFORNIA BUILDING CODE 2022
01/26/2024 OPM-0403: Reviewed for Code Compliance by William Staehlin

RIGID BRACING REQUIREMENTS [7]

SINGLE HUNG PIPE CAST IRON PIPE (WATER FILLED) [9] — **MAXIMUM SEISMIC DESIGN FORCE = 1.00 G's**

Requires Use of ISAT Seismic Brackets. Use of Any Non-ISAT Bracket Voids Engineering. 2013 California Building Code Compliant

Maximum Pipe Diameter (in.)	Max. Vertical Support Spacing (ft.)	Rod [1] Total Vertical Load (lbs)	Min. [8] Vertical Support Rod Dia. (in.)	TRANSVERSE BRACING REQUIREMENTS: Max. [2] Brace Spacing (ft.)	Brace [3] Reaction P (lbs)	Min. Brace Assembly E - Pages	Min. Brace Anchorage [6]: Form Pour [4] Deck Page D1	Min. Brace Anchorage [6]: Metal [5] Deck Page D2	LONGITUDINAL BRACING REQUIREMENTS: Max. [2] Brace Spacing (ft.)	Brace [3] Reaction P (lbs)	Min. Brace Assembly E - Pages	Min. Brace Anchorage [6]: Form Pour [4] Deck Page D1	Min. Brace Anchorage [6]: Metal [5] Deck Page D2
				1-Way Transverse Brace Pattern (B1.4, B1.5)					**2-Way Trans., Longit. Brace Pattern (B3.0, B3.1)**				
2	8	174	3/8	10	78	R38AAEM306	N1	L1	17	136	R38AAEM306	N2	L2
3	8	333	1/2	12	157	R12AAEM306	N2	L2	21	276	R12AAEM306	N3	L3
4	8	543	5/8	12	246	R58AAEM306	N3	L3	23	467	R58AAEM406	N5	L5
5	8	751	5/8	12	326	R58AAEM409	N4	L4	23	651	R58AAEM406	N7	L7
6	8	977	5/8	12	424	R58AAEM406	N5	L5	23	848	R58AAEM506	N9	L9
				TRANSVERSE, LONGITUDINAL BRACING REQUIREMENTS									
				4-Way Splayed Brace Pattern (B4.14)									
2	8	54	3/8	10	55	R38AAEM306	N1	L1					
3	8	90	1/2	12	111	R12AAEM306	N2	L2					
4	8	138	5/8	12	174	R58AAEM306	N2	L2					
5	8	193	5/8	12	230	R58AAEM306	N3	L3					
6	8	251	5/8	12	300	R58AAEM306	N3	L3					

SINGLE HUNG PIPE CAST IRON PIPE (EMPTY) [10] — **MAXIMUM SEISMIC DESIGN FORCE = 1.00 G's**

				1-Way Transverse Brace Pattern (B1.4, B1.5)					**2-Way Trans., Longit. Brace Pattern (B3.0, B3.1)**				
2	8	156	3/8	13	73	R38AAEM306	N1	L1	24	135	R38AAEM306	N2	L2
3	8	268	1/2	15	124	R12AAEM306	N2	L2	31	248	R12AAEM306	N3	L3
4	8	400	5/8	16	187	R58AAEM306	N2	L2	32	374	R58AAEM406	N4	L4
5	8	506	5/8	16	236	R58AAEM306	N3	L3	32	472	R58AAEM406	N5	L5
6	8	619	5/8	17	292	R58AAEM306	N3	L3	34	584	R58AAEM406	N6	L6
				TRANSVERSE, LONGITUDINAL BRACING REQUIREMENTS									
				4-Way Splayed Brace Pattern (B4.14)									
2	8	39	3/8	13	52	R38AAEM306	N1	L1					
3	8	56	1/2	15	88	R12AAEM306	N1	L1					
4	8	80	5/8	16	132	R58AAEM306	N2	L2					
5	8	102	5/8	16	167	R58AAEM306	N2	L2					
6	8	119	5/8	17	207	R58AAEM306	N3	L3					

1. TVL = DL + Fv + ($0.2S_{DS}$/1.4 x Wp). All Terms Are Working Loads.
2. Reductions In Actual Installed Brace Spacing Will Result In An Equal Percentage Reduction In Brace Reaction. As An Option When This Occurs ISAT May Substitute An Alternate Anchorage From Tables D1 or D2 Which Meets or Exceeds The Lowered Brace Reaction.
3. At Max. 50 Degree Brace Inclination.
4. Min. 3,000 psi NWC. Any "N Series" Connection May Be Utilized Having A Numeric Designation Equal To Or Higher Than That Shown.
5. Min. 3,000 psi NWC or LWC. Any "L Series" Connection May Be Utilized Having A Numeric Designation Equal To Or Higher Than That Shown.
6. As An Alternate, Brace Anchorage Connections To Structure May Be Employed Using Any Detail From Structural Connections Section "D" Series Details Where Assembly Design Value Meets Or Exceeds Brace Reaction.
7. For Trade Specific Bracing Installation Notes, Refer To Page 10.1
8. Utilize Any "G" Series Vertical Support Connection Having A Design Value Equal To Or Greater Than The Corresponding "Rod Total Vertical Load".
9. Based on Water Filled Pipe Weight. Refer to X-Series Weight Charts.
10. Based on Empty Pipe Weight. Refer to X-Series Weight Charts.

REGISTERED PROFESSIONAL ENGINEER MARCIN WASAZNIK S-6612 STRUCTURAL STATE OF CALIFORNIA

ISAT
A Division of Tomarco Contractor Specialties
International Seismic Application Technology
14848 Northam Street, La Mirada, CA 90638
877-999-4728 (Toll Free) 714-523-0845 (Fax)
www.isatsb.com

Rev. 0
12/11/18

REVIEWED FOR CODE COMPLIANCE BY: OPM-0403 DATE: 01-26-2024 CALIFORNIA BUILDING CODE 2022
OPM-0403: Reviewed for Code Compliance by William Staehlin

RIGID BRACING REQUIREMENTS [7]

SINGLE HUNG PIPE CAST IRON PIPE (WATER FILLED) [9] — **MAXIMUM SEISMIC DESIGN FORCE = 1.00 G's**

Requires Use of ISAT Seismic Brackets. Use of Any Non-ISAT Bracket Voids Engineering. 2013 California Building Code Compliant

Maximum Pipe Diameter (in.)	Max. Vertical Support Spacing (ft.)	Rod [1] Total Vertical Load (lbs)	Min. [8] Vertical Support Rod Dia. (in.)	TRANSVERSE BRACING REQUIREMENTS: Max. [2] Brace Spacing (ft.)	Brace [3] Reaction P (lbs)	Min. Brace Assembly E - Pages	Min. Brace Anchorage [6]: Form Pour [4] Deck Page D1	Min. Brace Anchorage [6]: Metal [5] Deck Page D2	LONGITUDINAL BRACING REQUIREMENTS: Max. [2] Brace Spacing (ft.)	Brace [3] Reaction P (lbs)	Min. Brace Assembly E - Pages	Min. Brace Anchorage [6]: Form Pour [4] Deck Page D1	Min. Brace Anchorage [6]: Metal [5] Deck Page D2
				1-Way Transverse Brace Pattern (B1.4, B1.5)					**2-Way Trans., Longit. Brace Pattern (B3.0, B3.1)**				
2	8	228	3/8	10	100	R38AAEM306	N1	L1	17	175	R38AAEM306	N2	L2
3	8	443	1/2	12	202	R12AAEM306	N3	L3	21	354	R12AAEM406	N4	L4
4	8	726	5/8	12	316	R58AAEM409	N4	L4	23	601	R58AAEM406	N7	L7
5	8	1,004	5/8	12	419	R58AAEM406	N5	L5	23	837	R58AAEM506	N9	L9
6	8	1,306	5/8	12	545	R58AAEM406	N6	L6	23	1,090	R58AAEM506	N11	L11
				TRANSVERSE, LONGITUDINAL BRACING REQUIREMENTS									
				4-Way Splayed Brace Pattern (B4.14)									
2	8	54	3/8	10	71	R38AAEM306	N1	L1					
3	8	90	1/2	12	143	R12AAEM306	N2	L2					
4	8	138	5/8	12	223	R58AAEM306	N3	L3					
5	8	193	5/8	12	296	R58AAEM306	N3	L3					
6	8	251	5/8	12	385	R58AAEM406	N4	L4					

SINGLE HUNG PIPE CAST IRON PIPE (EMPTY) [10] — **MAXIMUM SEISMIC DESIGN FORCE = 1.00 G's**

				1-Way Transverse Brace Pattern (B1.4, B1.5)					**2-Way Trans., Longit. Brace Pattern (B3.0, B3.1)**				
2	8	210	3/8	13	94	R38AAEM306	N1	L1	24	173	R38AAEM306	N2	L2
3	8	365	1/2	15	159	R12AAEM306	N2	L2	31	319	R12AAEM409	N4	L4
4	8	546	5/8	16	240	R58AAEM306	N3	L3	32	481	R58AAEM406	N5	L5
5	8	689	5/8	16	303	R58AAEM409	N4	L4	32	607	R58AAEM406	N7	L7
6	8	846	5/8	17	376	R58AAEM406	N4	L4	34	751	R58AAEM509	N8	L8
				TRANSVERSE, LONGITUDINAL BRACING REQUIREMENTS									
				4-Way Splayed Brace Pattern (B4.14)									
2	8	39	3/8	13	66	R38AAEM306	N1	L1					
3	8	56	1/2	15	113	R12AAEM306	N2	L2					
4	8	80	5/8	16	170	R58AAEM306	N2	L2					
5	8	102	5/8	16	214	R58AAEM306	N3	L3					
6	8	119	5/8	17	266	R58AAEM306	N3	L3					

1. TVL = DL + Fv + ($0.2S_{DS}$/1.4 x Wp). All Terms Are Working Loads.
2. Reductions In Actual Installed Brace Spacing Will Result In An Equal Percentage Reduction In Brace Reaction. As An Option When This Occurs ISAT May Substitute An Alternate Anchorage From Tables D1 or D2 Which Meets or Exceeds The Lowered Brace Reaction.
3. At Max. 60 Degree Brace Inclination.
4. Min. 3,000 psi NWC. Any "N Series" Connection May Be Utilized Having A Numeric Designation Equal To Or Higher Than That Shown.
5. Min. 3,000 psi NWC or LWC. Any "L Series" Connection May Be Utilized Having A Numeric Designation Equal To Or Higher Than That Shown.
6. As An Alternate, Brace Anchorage Connections To Structure May Be Employed Using Any Detail From Structural Connections Section "D" Series Details Where Assembly Design Value Meets Or Exceeds Brace Reaction.
7. For Trade Specific Bracing Installation Notes, Refer To Page 10.1
8. Utilize Any "G" Series Vertical Support Connection Having A Design Value Equal To Or Greater Than The Corresponding "Rod Total Vertical Load".
9. Based on Water Filled Pipe Weight. Refer to X-Series Weight Charts.
10. Based on Empty Pipe Weight. Refer to X-Series Weight Charts.

REGISTERED PROFESSIONAL ENGINEER MARCIN WASAZNIK S-6612 STRUCTURAL STATE OF CALIFORNIA

ISAT
A Division of Tomarco Contractor Specialties
International Seismic Application Technology
14848 Northam Street, La Mirada, CA 90638
877-999-4728 (Toll Free) 714-523-0845 (Fax)
www.isatsb.com

Rev. 0
12/11/18

REVIEWED FOR CODE COMPLIANCE BY: OPM-0403 DATE: 01-26-2024 CALIFORNIA BUILDING CODE 2022
01/26/2024 OPM-0403: Reviewed for Code Compliance by William Staehlin
Page 1166 of 1157

CABLE BRACING REQUIREMENTS [7]:

SINGLE HUNG PIPE CAST IRON PIPE (WATER FILLED) [9] — MAXIMUM SEISMIC DESIGN FORCE = 0.25 G's

Requires Use of ISAT Seismic Brackets. Use of Any Non-ISAT Bracket Voids Engineering. — *2013 California Building Code Compliant*

Maximum Pipe Diameter (in.)	Max. Vertical Support Spacing (ft.)	Rod [1] Total Vertical Load (lbs)	Min. [8] Vertical Support Rod Dia. (in.)	TRANSVERSE BRACING REQUIREMENTS: Max. [2] Brace Spacing (ft.)	Brace [3] Reaction P (lbs)	Min. Brace Assembly E - Pages	Min. Brace Anchorage [6]: Form Pour [4] Deck Page D1	Metal [5] Deck Page D2	LONGITUDINAL BRACING REQUIREMENTS: Max. [2] Brace Spacing (ft.)	Brace [3] Reaction P (lbs)	Min. Brace Assembly E - Pages	Min. Brace Anchorage [6]: Form Pour [4] Deck Page D1	Metal [5] Deck Page D2
				2-Way Transverse Brace Pattern (B6.4, B6.5)					4-Way T/L Details (B7.0, B7.1, B7.2, B8.4)				
2	8	54	3/8	20	29	C38AA04WS	N1	L1	40	58	C38AA04WS	N1	L1
3	8	90	1/2	24	58	C12AA04WS	N1	L1	40	96	C12AA04WS	N1	L1
4	8	138	5/8	25	91	C58AA04WS	N1	L1	40	148	C58AA04WS	N2	L2
5	8	193	5/8	23	121	C58AA04WS	N2	L2	40	207	C58AA04WS	N3	L3
6	8	251	5/8	23	157	C58AA04WS	N2	L2	40	268	C58AA04WS	N3	L3
				TRANSVERSE, LONGITUDINAL BRACING REQUIREMENTS (SELECT EITHER T/L OR SPLAY)									
				4-Way T/L Details (B7.0, B7.1, B7.2, B8.4)					4-Way Splay Details (B9.0, B9.1, B9.1.1)				
2	8	54	3/8	20	29	C38AA04WS	N1	L1	20	39	C38AA04WS	N1	L1
3	8	90	1/2	24	58	C12AA04WS	N1	L1	24	78	C12AA04WS	N1	L1
4	8	138	5/8	25	91	C58AA04WS	N1	L1	25	122	C58AA04WS	N2	L2
5	8	193	5/8	23	121	C58AA04WS	N2	L2	23	162	C58AA04WS	N2	L2
6	8	251	5/8	23	157	C58AA04WS	N2	L2	23	211	C58AA04WS	N3	L3

SINGLE HUNG PIPE CAST IRON PIPE (EMPTY) [10] — MAXIMUM SEISMIC DESIGN FORCE = 0.25 G's

				2-Way Transverse Brace Pattern (B6.4, B6.5)					4-Way T/L Details (B7.0, B7.1, B7.2, B8.4)				
2	8	39	3/8	26	27	C38AA04WS	N1	L1	40	42	C38AA04WS	N1	L1
3	8	56	1/2	31	46	C12AA04WS	N1	L1	40	60	C12AA04WS	N1	L1
4	8	80	5/8	32	69	C58AA04WS	N1	L1	40	85	C58AA04WS	N1	L1
5	8	102	5/8	32	88	C58AA04WS	N1	L1	40	109	C58AA04WS	N2	L2
6	8	119	5/8	34	108	C58AA04WS	N2	L2	40	127	C58AA04WS	N2	L2
				TRANSVERSE, LONGITUDINAL BRACING REQUIREMENTS (SELECT EITHER T/L OR SPLAY)									
				4-Way T/L Details (B7.0, B7.1, B7.2, B8.4)					4-Way Splay Details (B9.0, B9.1, B9.1.1)				
2	8	39	3/8	26	27	C38AA04WS	N1	L1	26	36	C38AA04WS	N1	L1
3	8	56	1/2	31	46	C12AA04WS	N1	L1	31	62	C12AA04WS	N1	L1
4	8	80	5/8	32	69	C58AA04WS	N1	L1	32	93	C58AA04WS	N1	L1
5	8	102	5/8	32	88	C58AA04WS	N1	L1	32	117	C58AA04WS	N2	L2
6	8	119	5/8	34	108	C58AA04WS	N2	L2	34	146	C58AA04WS	N2	L2

1. TVL = DL + Fv + ($0.2S_{DS}$/1.4 x Wp). All Terms Are Working Loads.
2. Reductions In Actual Installed Brace Spacing Will Result In An Equal Percentage Reduction In Brace Reaction. As An Option When This Occurs ISAT May Substitute An Alternate Anchorage From Tables D1 or D2 Which Meets or Exceeds The Lowered Brace Reaction.
3. At Max. 30 Degree Brace Inclination.
4. Min. 3,000 psi NWC. Any "N Series" Connection May Be Utilized Having A Numeric Designation Equal To Or Higher Than That Shown.
5. Min. 3,000 psi NWC or LWC. Any "L Series" Connection May Be Utilized Having A Numeric Designation Equal To Or Higher Than That Shown.
6. As An Alternate, Brace Anchorage Connections To Structure May Be Employed Using Any Detail From Structural Connections Section "D" Series Details Where Assembly Design Value Meets Or Exceeds Brace Reaction.
7. For Trade Specific Bracing Installation Notes, Refer To Page 10.1
8. Utilize Any "G" Series Vertical Support Connection Having A Design Value Equal To Or Greater Than The Corresponding "Rod Total Vertical Load".
9. Based on Water Filled Pipe Weight. Refer to X-Series Weight Charts.
10. Based on Empty Pipe Weight. Refer to X-Series Weight Charts.

REGISTERED PROFESSIONAL ENGINEER MARCIN WASAZNIK S-6612 STRUCTURAL STATE OF CALIFORNIA

ISAT
A Division of Tomarco Contractor Specialties
International Seismic Application Technology
14848 Northam Street, La Mirada, CA 90638
877-999-4728 (Toll Free) 714-523-0845 (Fax)
www.isatsb.com

Rev. 0
11/28/18
Page
C14-0.25-30

01/26/2024 OPM-0403: Reviewed for Code Compliance by William Staehlin Page 367 of 1157

CABLE BRACING REQUIREMENTS [7]:

SINGLE HUNG PIPE CAST IRON PIPE (WATER FILLED) [9] — MAXIMUM SEISMIC DESIGN FORCE = 0.25 G's

Requires Use of ISAT Seismic Brackets. Use of Any Non-ISAT Bracket Voids Engineering. — *2013 California Building Code Compliant*

Maximum Pipe Diameter (in.)	Max. Vertical Support Spacing (ft.)	Rod [1] Total Vertical Load (lbs)	Min. [8] Vertical Support Rod Dia. (in.)	TRANSVERSE BRACING REQUIREMENTS: Max. [2] Brace Spacing (ft.)	Brace [3] Reaction P (lbs)	Min. Brace Assembly E - Pages	Min. Brace Anchorage [6]: Form Pour [4] Deck Page D1	Metal [5] Deck Page D2	LONGITUDINAL BRACING REQUIREMENTS: Max. [2] Brace Spacing (ft.)	Brace [3] Reaction P (lbs)	Min. Brace Assembly E - Pages	Min. Brace Anchorage [6]: Form Pour [4] Deck Page D1	Metal [5] Deck Page D2
				2-Way Transverse Brace Pattern (B6.4, B6.5)					4-Way T/L Details (B7.0, B7.1, B7.2, B8.4)				
2	8	54	3/8	20	39	C38AA04WS	N1	L1	40	77	C38AA04WS	N1	L1
3	8	90	1/2	24	78	C12AA04WS	N1	L1	40	129	C12AA04WS	N2	L2
4	8	138	5/8	25	123	C58AA04WS	N2	L2	40	199	C58AA04WS	N2	L2
5	8	193	5/8	23	163	C58AA04WS	N2	L2	40	278	C58AA04WS	N3	L3
6	8	251	5/8	23	212	C58AA04WS	N3	L3	40	361	C58AA04WS	N4	L4
				TRANSVERSE, LONGITUDINAL BRACING REQUIREMENTS (SELECT EITHER T/L OR SPLAY)									
				4-Way T/L Details (B7.0, B7.1, B7.2, B8.4)					4-Way Splay Details (B9.0, B9.1, B9.1.1)				
2	8	54	3/8	20	39	C38AA04WS	N1	L1	20	52	C38AA04WS	N1	L1
3	8	90	1/2	24	78	C12AA04WS	N1	L1	24	105	C12AA04WS	N2	L2
4	8	138	5/8	25	123	C58AA04WS	N2	L2	25	165	C58AA04WS	N2	L2
5	8	193	5/8	23	163	C58AA04WS	N2	L2	23	218	C58AA04WS	N3	L3
6	8	251	5/8	23	212	C58AA04WS	N3	L3	23	285	C58AA04WS	N3	L3

SINGLE HUNG PIPE CAST IRON PIPE (EMPTY) [10] — MAXIMUM SEISMIC DESIGN FORCE = 0.25 G's

				2-Way Transverse Brace Pattern (B6.4, B6.5)					4-Way T/L Details (B7.0, B7.1, B7.2, B8.4)				
2	8	39	3/8	26	36	C38AA04WS	N1	L1	40	56	C38AA04WS	N1	L1
3	8	56	1/2	31	62	C12AA04WS	N1	L1	40	81	C12AA04WS	N1	L1
4	8	80	5/8	32	94	C58AA04WS	N1	L1	40	115	C58AA04WS	N2	L2
5	8	102	5/8	32	118	C58AA04WS	N2	L2	40	146	C58AA04WS	N2	L2
6	8	119	5/8	34	146	C58AA04WS	N2	L2	40	171	C58AA04WS	N2	L2
				TRANSVERSE, LONGITUDINAL BRACING REQUIREMENTS (SELECT EITHER T/L OR SPLAY)									
				4-Way T/L Details (B7.0, B7.1, B7.2, B8.4)					4-Way Splay Details (B9.0, B9.1, B9.1.1)				
2	8	39	3/8	26	36	C38AA04WS	N1	L1	26	49	C38AA04WS	N1	L1
3	8	56	1/2	31	62	C12AA04WS	N1	L1	31	83	C12AA04WS	N1	L1
4	8	80	5/8	32	94	C58AA04WS	N1	L1	32	125	C58AA04WS	N2	L2
5	8	102	5/8	32	118	C58AA04WS	N2	L2	32	158	C58AA04WS	N2	L2
6	8	119	5/8	34	146	C58AA04WS	N2	L2	34	196	C58AA04WS	N2	L2

1. TVL = DL + Fv + ($0.2S_{DS}$/1.4 x Wp). All Terms Are Working Loads.
2. Reductions In Actual Installed Brace Spacing Will Result In An Equal Percentage Reduction In Brace Reaction. As An Option When This Occurs ISAT May Substitute An Alternate Anchorage From Tables D1 or D2 Which Meets or Exceeds The Lowered Brace Reaction.
3. At Max. 50 Degree Brace Inclination.
4. Min. 3,000 psi NWC. Any "N Series" Connection May Be Utilized Having A Numeric Designation Equal To Or Higher Than That Shown.
5. Min. 3,000 psi NWC or LWC. Any "L Series" Connection May Be Utilized Having A Numeric Designation Equal To Or Higher Than That Shown.
6. As An Alternate, Brace Anchorage Connections To Structure May Be Employed Using Any Detail From Structural Connections Section "D" Series Details Where Assembly Design Value Meets Or Exceeds Brace Reaction.
7. For Trade Specific Bracing Installation Notes, Refer To Page 10.1
8. Utilize Any "G" Series Vertical Support Connection Having A Design Value Equal To Or Greater Than The Corresponding "Rod Total Vertical Load".
9. Based on Water Filled Pipe Weight. Refer to X-Series Weight Charts.
10. Based on Empty Pipe Weight. Refer to X-Series Weight Charts.

REGISTERED PROFESSIONAL ENGINEER MARCIN WASAZNIK S-6612 STRUCTURAL STATE OF CALIFORNIA

ISAT
A Division of Tomarco Contractor Specialties
International Seismic Application Technology
14848 Northam Street, La Mirada, CA 90638
877-999-4728 (Toll Free) 714-523-0845 (Fax)
www.isatsb.com

Rev. 0
11/28/18
Page
C14-0.25-45

CABLE BRACING REQUIREMENTS [7]:

SINGLE HUNG PIPE CAST IRON PIPE (WATER FILLED) [9] — **MAXIMUM SEISMIC DESIGN FORCE = 0.25 G's**

Requires Use of ISAT Seismic Brackets. Use of Any Non-ISAT Bracket Voids Engineering. — *2013 California Building Code Compliant*

Maximum Pipe Diameter (in.)	Max. Vertical Support Spacing (ft.)	Rod [1] Total Vertical Load (lbs)	Min. [8] Vertical Support Rod Dia. (in.)	TRANSVERSE BRACING REQUIREMENTS: Max. [2] Brace Spacing (ft.)	Brace [3] Reaction P (lbs)	Min. Brace Assembly E - Pages	Min. Brace Anchorage [6]: Form Pour [4] Deck Page D1	Metal [5] Deck Page D2	LONGITUDINAL BRACING REQUIREMENTS: Max. [2] Brace Spacing (ft.)	Brace [3] Reaction P (lbs)	Min. Brace Assembly E - Pages	Min. Brace Anchorage [6]: Form Pour [4] Deck Page D1	Metal [5] Deck Page D2
				2-Way Transverse Brace Pattern (B6.4, B6.5)					**4-Way T/L Details (B7.0, B7.1, B7.2, B8.4)**				
2	8	54	3/8	20	50	C38AA04WS	N1	L1	40	100	C38AA04WS	N1	L1
3	8	90	1/2	24	101	C12AA04WS	N2	L2	40	166	C12AA04WS	N2	L2
4	8	138	5/8	25	158	C58AA04WS	N2	L2	40	256	C58AA04WS	N3	L3
5	8	193	5/8	23	209	C58AA04WS	N3	L3	40	358	C58AA04WS	N4	L4
6	8	251	5/8	23	273	C58AA04WS	N3	L3	40	464	C58AA04WS	N5	L5
				TRANSVERSE, LONGITUDINAL BRACING REQUIREMENTS (SELECT EITHER T/L OR SPLAY)									
				4-Way T/L Details (B7.0, B7.1, B7.2, B8.4)					**4-Way Splay Details (B9.0, B9.1, B9.1.1)**				
2	8	54	3/8	20	50	C38AA04WS	N1	L1	20	67	C38AA04WS	N1	L1
3	8	90	1/2	24	101	C12AA04WS	N2	L2	24	135	C12AA04WS	N2	L2
4	8	138	5/8	25	158	C58AA04WS	N2	L2	25	212	C58AA04WS	N3	L3
5	8	193	5/8	23	209	C58AA04WS	N3	L3	23	281	C58AA04WS	N3	L3
6	8	251	5/8	23	273	C58AA04WS	N3	L3	23	366	C58AA04WS	N4	L4

SINGLE HUNG PIPE CAST IRON PIPE (EMPTY) [10] — **MAXIMUM SEISMIC DESIGN FORCE = 0.25 G's**

				2-Way Transverse Brace Pattern (B6.4, B6.5)					**4-Way T/L Details (B7.0, B7.1, B7.2, B8.4)**				
2	8	39	3/8	26	47	C38AA04WS	N1	L1	40	72	C38AA04WS	N1	L1
3	8	56	1/2	31	80	C12AA04WS	N1	L1	40	104	C12AA04WS	N2	L2
4	8	80	5/8	32	120	C58AA04WS	N2	L2	40	148	C58AA04WS	N2	L2
5	8	102	5/8	32	152	C58AA04WS	N2	L2	40	188	C58AA04WS	N2	L2
6	8	119	5/8	34	188	C58AA04WS	N2	L2	40	220	C58AA04WS	N3	L3
				TRANSVERSE, LONGITUDINAL BRACING REQUIREMENTS (SELECT EITHER T/L OR SPLAY)									
				4-Way T/L Details (B7.0, B7.1, B7.2, B8.4)					**4-Way Splay Details (B9.0, B9.1, B9.1.1)**				
2	8	39	3/8	26	47	C38AA04WS	N1	L1	26	63	C38AA04WS	N1	L1
3	8	56	1/2	31	80	C12AA04WS	N1	L1	31	107	C12AA04WS	N2	L2
4	8	80	5/8	32	120	C58AA04WS	N2	L2	32	161	C58AA04WS	N2	L2
5	8	102	5/8	32	152	C58AA04WS	N2	L2	32	204	C58AA04WS	N3	L3
6	8	119	5/8	34	188	C58AA04WS	N2	L2	34	252	C58AA04WS	N3	L3

1. TVL = DL + Fv + ($0.2S_{DS}$/1.4 x Wp). All Terms Are Working Loads.
2. Reductions In Actual Installed Brace Spacing Will Result In An Equal Percentage Reduction In Brace Reaction. As An Option When This Occurs ISAT May Substitute An Alternate Anchorage From Tables D1 or D2 Which Meets or Exceeds The Lowered Brace Reaction.
3. At Max. 60 Degree Brace Inclination.
4. Min. 3,000 psi NWC. Any "N Series" Connection May Be Utilized Having A Numeric Designation Equal To Or Higher Than That Shown.
5. Min. 3,000 psi NWC or LWC. Any "L Series" Connection May Be Utilized Having A Numeric Designation Equal To Or Higher Than That Shown.
6. As An Alternate, Brace Anchorage Connections To Structure May Be Employed Using Any Detail From Structural Connections Section "D" Series Details Where Assembly Design Value Meets Or Exceeds Brace Reaction.
7. For Trade Specific Bracing Installation Notes, Refer To Page 10.1
8. Utilize Any "G" Series Vertical Support Connection Having A Design Value Equal To Or Greater Than The Corresponding "Rod Total Vertical Load".
9. Based on Water Filled Pipe Weight. Refer to X-Series Weight Charts.
10. Based on Empty Pipe Weight. Refer to X-Series Weight Charts.

REGISTERED PROFESSIONAL ENGINEER MARCIN WASAZNIK S-6612 STRUCTURAL STATE OF CALIFORNIA

ISAT
A Division of Tomarco Contractor Specialties
International Seismic Application Technology
14848 Northam Street, La Mirada, CA 90638
877-999-4728 (Toll Free) 714-523-0845 (Fax)
www.isatsb.com

Rev. 0
11/28/18
Page
C14-0.25-60

REVIEWED FOR CODE COMPLIANCE OPM-0403 William Staehlin DATE 01/26/2024 CALIFORNIA BUILDING CODE 2022

CABLE BRACING REQUIREMENTS [7]:

SINGLE HUNG PIPE CAST IRON PIPE (WATER FILLED) [9] — **MAXIMUM SEISMIC DESIGN FORCE = 0.50 G's**

Requires Use of ISAT Seismic Brackets. Use of Any Non-ISAT Bracket Voids Engineering. — *2013 California Building Code Compliant*

Maximum Pipe Diameter (in.)	Max. Vertical Support Spacing (ft.)	Rod [1] Total Vertical Load (lbs)	Min. [8] Vertical Support Rod Dia. (in.)	TRANSVERSE BRACING REQUIREMENTS: Max. [2] Brace Spacing (ft.)	Brace [3] Reaction P (lbs)	Min. Brace Assembly E - Pages	Min. Brace Anchorage [6]: Form Pour [4] Deck Page D1	Metal [5] Deck Page D2	LONGITUDINAL BRACING REQUIREMENTS: Max. [2] Brace Spacing (ft.)	Brace [3] Reaction P (lbs)	Min. Brace Assembly E - Pages	Min. Brace Anchorage [6]: Form Pour [4] Deck Page D1	Metal [5] Deck Page D2
				2-Way Transverse Brace Pattern (B6.4, B6.5)					4-Way T/L Details (B7.0, B7.1, B7.2, B8.4)				
2	8	54	3/8	14	41	C38AA04WS	N1	L1	28	81	C38AA04WS	N1	L1
3	8	90	1/2	17	82	C12AA04WS	N1	L1	34	165	C12AA04WS	N2	L2
4	8	138	5/8	17	129	C58AA04WS	N2	L2	35	258	C58AA04WS	N3	L3
5	8	193	5/8	17	171	C58AA04WS	N2	L2	33	342	C58AA04WS	N4	L4
6	8	251	5/8	17	223	C58AA04WS	N3	L3	33	445	C58AA04WS	N5	L5
				TRANSVERSE, LONGITUDINAL BRACING REQUIREMENTS (SELECT EITHER T/L OR SPLAY)									
				4-Way T/L Details (B7.0, B7.1, B7.2, B8.4)					4-Way Splay Details (B9.0, B9.1, B9.1.1)				
2	8	54	3/8	14	41	C38AA04WS	N1	L1	14	55	C38AA04WS	N1	L1
3	8	90	1/2	17	82	C12AA04WS	N1	L1	17	111	C12AA04WS	N2	L2
4	8	138	5/8	17	129	C58AA04WS	N2	L2	17	173	C58AA04WS	N2	L2
5	8	193	5/8	17	171	C58AA04WS	N2	L2	17	229	C58AA04WS	N3	L3
6	8	251	5/8	17	223	C58AA04WS	N3	L3	17	299	C58AA04WS	N3	L3

SINGLE HUNG PIPE CAST IRON PIPE (EMPTY) [10] — **MAXIMUM SEISMIC DESIGN FORCE = 0.50 G's**

				2-Way Transverse Brace Pattern (B6.4, B6.5)					4-Way T/L Details (B7.0, B7.1, B7.2, B8.4)				
2	8	39	3/8	18	38	C38AA04WS	N1	L1	37	76	C38AA04WS	N1	L1
3	8	56	1/2	22	65	C12AA04WS	N1	L1	40	120	C12AA04WS	N2	L2
4	8	80	5/8	23	98	C58AA04WS	N1	L1	40	171	C58AA04WS	N2	L2
5	8	102	5/8	23	124	C58AA04WS	N2	L2	40	217	C58AA04WS	N3	L3
6	8	119	5/8	24	153	C58AA04WS	N2	L2	40	254	C58AA04WS	N3	L3
				TRANSVERSE, LONGITUDINAL BRACING REQUIREMENTS (SELECT EITHER T/L OR SPLAY)									
				4-Way T/L Details (B7.0, B7.1, B7.2, B8.4)					4-Way Splay Details (B9.0, B9.1, B9.1.1)				
2	8	39	3/8	18	38	C38AA04WS	N1	L1	18	51	C38AA04WS	N1	L1
3	8	56	1/2	22	65	C12AA04WS	N1	L1	22	87	C12AA04WS	N1	L1
4	8	80	5/8	23	98	C58AA04WS	N1	L1	23	132	C58AA04WS	N2	L2
5	8	102	5/8	23	124	C58AA04WS	N2	L2	23	166	C58AA04WS	N2	L2
6	8	119	5/8	24	153	C58AA04WS	N2	L2	24	206	C58AA04WS	N3	L3

1. TVL = DL + Fv + ($0.2S_{DS}$/1.4 x Wp). All Terms Are Working Loads.
2. Reductions In Actual Installed Brace Spacing Will Result In An Equal Percentage Reduction In Brace Reaction. As An Option When This Occurs ISAT May Substitute An Alternate Anchorage From Tables D1 or D2 Which Meets or Exceeds The Lowered Brace Reaction.
3. At Max. 30 Degree Brace Inclination.
4. Min. 3,000 psi NWC. Any "N Series" Connection May Be Utilized Having A Numeric Designation Equal To Or Higher Than That Shown.
5. Min. 3,000 psi NWC or LWC. Any "L Series" Connection May Be Utilized Having A Numeric Designation Equal To Or Higher Than That Shown.
6. As An Alternate, Brace Anchorage Connections To Structure May Be Employed Using Any Detail From Structural Connections Section "D" Series Details Where Assembly Design Value Meets Or Exceeds Brace Reaction.
7. For Trade Specific Bracing Installation Notes, Refer To Page 10.1
8. Utilize Any "G" Series Vertical Support Connection Having A Design Value Equal To Or Greater Than The Corresponding "Rod Total Vertical Load".
9. Based on Water Filled Pipe Weight. Refer to X-Series Weight Charts.
10. Based on Empty Pipe Weight. Refer to X-Series Weight Charts.

REGISTERED PROFESSIONAL ENGINEER MARCIN WASAZNIK S 6612 STRUCTURAL STATE OF CALIFORNIA

ISAT
A Division of Tomarco Contractor Specialties
International Seismic Application Technology
14848 Northam Street, La Mirada, CA 90638
877-999-4728 (Toll Free) 714-523-0845 (Fax)
www.isatsb.com

Rev. 0
11/28/18

01/26/2024 OPM-0403: Reviewed for Code Compliance by William Staehlin Page 370 of 1157

CABLE BRACING REQUIREMENTS [7]:

SINGLE HUNG PIPE CAST IRON PIPE (WATER FILLED) [9] — MAXIMUM SEISMIC DESIGN FORCE = 0.50 G's

Requires Use of ISAT Seismic Brackets. Use of Any Non-ISAT Bracket Voids Engineering. — *2013 California Building Code Compliant*

Maximum Pipe Diameter (in.)	Max. Vertical Support Spacing (ft.)	Rod [1] Total Vertical Load (lbs)	Min. [8] Vertical Support Rod Dia. (in.)	TRANSVERSE BRACING REQUIREMENTS: Max. [2] Brace Spacing (ft.)	Brace [3] Reaction P (lbs)	Min. Brace Assembly E - Pages	Min. Brace Anchorage [6]: Form Pour [4] Deck Page D1	Metal [5] Deck Page D2	LONGITUDINAL BRACING REQUIREMENTS: Max. [2] Brace Spacing (ft.)	Brace [3] Reaction P (lbs)	Min. Brace Assembly E - Pages	Min. Brace Anchorage [6]: Form Pour [4] Deck Page D1	Metal [5] Deck Page D2
				2-Way Transverse Brace Pattern (B6.4, B6.5)					4-Way T/L Details (B7.0, B7.1, B7.2, B8.4)				
2	8	54	3/8	14	55	C38AA04WS	N1	L1	28	110	C38AA04WS	N2	L2
3	8	90	1/2	17	111	C12AA04WS	N2	L2	34	222	C12AA04WS	N3	L3
4	8	138	5/8	17	174	C58AA04WS	N2	L2	35	347	C58AA04WS	N4	L4
5	8	193	5/8	17	230	C58AA04WS	N3	L3	33	460	C58AA04WS	N5	L5
6	8	251	5/8	17	300	C58AA04WS	N3	L3	33	600	C58AA04WS	N6	L6
				TRANSVERSE, LONGITUDINAL BRACING REQUIREMENTS (SELECT EITHER T/L OR SPLAY)									
				4-Way T/L Details (B7.0, B7.1, B7.2, B8.4)					4-Way Splay Details (B9.0, B9.1, B9.1.1)				
2	8	54	3/8	14	55	C38AA04WS	N1	L1	14	74	C38AA04WS	N1	L1
3	8	90	1/2	17	111	C12AA04WS	N2	L2	17	149	C12AA04WS	N2	L2
4	8	138	5/8	17	174	C58AA04WS	N2	L2	17	233	C58AA04WS	N3	L3
5	8	193	5/8	17	230	C58AA04WS	N3	L3	17	309	C58AA04WS	N4	L4
6	8	251	5/8	17	300	C58AA04WS	N3	L3	17	402	C58AA04WS	N5	L5

SINGLE HUNG PIPE CAST IRON PIPE (EMPTY) [10] — MAXIMUM SEISMIC DESIGN FORCE = 0.50 G's

				2-Way Transverse Brace Pattern (B6.4, B6.5)					4-Way T/L Details (B7.0, B7.1, B7.2, B8.4)				
2	8	39	3/8	18	52	C38AA04WS	N1	L1	37	103	C38AA04WS	N2	L2
3	8	56	1/2	22	88	C12AA04WS	N1	L1	40	162	C12AA04WS	N2	L2
4	8	80	5/8	23	132	C58AA04WS	N2	L2	40	230	C58AA04WS	N3	L3
5	8	102	5/8	23	167	C58AA04WS	N2	L2	40	292	C58AA04WS	N3	L3
6	8	119	5/8	24	207	C58AA04WS	N3	L3	40	342	C58AA04WS	N4	L4
				TRANSVERSE, LONGITUDINAL BRACING REQUIREMENTS (SELECT EITHER T/L OR SPLAY)									
				4-Way T/L Details (B7.0, B7.1, B7.2, B8.4)					4-Way Splay Details (B9.0, B9.1, B9.1.1)				
2	8	39	3/8	18	52	C38AA04WS	N1	L1	18	69	C38AA04WS	N1	L1
3	8	56	1/2	22	88	C12AA04WS	N1	L1	22	118	C12AA04WS	N2	L2
4	8	80	5/8	23	132	C58AA04WS	N2	L2	23	177	C58AA04WS	N2	L2
5	8	102	5/8	23	167	C58AA04WS	N2	L2	23	224	C58AA04WS	N3	L3
6	8	119	5/8	24	207	C58AA04WS	N3	L3	24	277	C58AA04WS	N3	L3

1. TVL = DL + Fv + ($0.2S_{DS}$/1.4 x Wp). All Terms Are Working Loads.
2. Reductions In Actual Installed Brace Spacing Will Result In An Equal Percentage Reduction In Brace Reaction. As An Option When This Occurs ISAT May Substitute An Alternate Anchorage From Tables D1 or D2 Which Meets or Exceeds The Lowered Brace Reaction.
3. At Max. 50 Degree Brace Inclination.
4. Min. 3,000 psi NWC. Any "N Series" Connection May Be Utilized Having A Numeric Designation Equal To Or Higher Than That Shown.
5. Min. 3,000 psi NWC or LWC. Any "L Series" Connection May Be Utilized Having A Numeric Designation Equal To Or Higher Than That Shown.
6. As An Alternate, Brace Anchorage Connections To Structure May Be Employed Using Any Detail From Structural Connections Section "D" Series Details Where Assembly Design Value Meets Or Exceeds Brace Reaction.
7. For Trade Specific Bracing Installation Notes, Refer To Page 10.1
8. Utilize Any "G" Series Vertical Support Connection Having A Design Value Equal To Or Greater Than The Corresponding "Rod Total Vertical Load".
9. Based on Water Filled Pipe Weight. Refer to X-Series Weight Charts.
10. Based on Empty Pipe Weight. Refer to X-Series Weight Charts.

REGISTERED PROFESSIONAL ENGINEER MARCIN WASAZNIK S-6612 STRUCTURAL STATE OF CALIFORNIA

ISAT
A Division of Tomarco Contractor Specialties
International Seismic Application Technology
14848 Northam Street, La Mirada, CA 90638
877-999-4728 (Toll Free) 714-523-0845 (Fax)
www.isatsb.com

Rev. 0
11/28/18

01/26/2024 OPM-0403: Reviewed for Code Compliance by William Staehlin Page 371 of 1157

CABLE BRACING REQUIREMENTS [7]:

SINGLE HUNG PIPE CAST IRON PIPE (WATER FILLED) [9] — **MAXIMUM SEISMIC DESIGN FORCE = 0.50 G's**

Requires Use of ISAT Seismic Brackets. Use of Any Non-ISAT Bracket Voids Engineering. — *2013 California Building Code Compliant*

Maximum Pipe Diameter (in.)	Max. Vertical Support Spacing (ft.)	Rod [1] Total Vertical Load (lbs)	Min. [8] Vertical Support Rod Dia. (in.)	TRANSVERSE BRACING REQUIREMENTS: Max. [2] Brace Spacing (ft.)	Brace [3] Reaction P (lbs)	Min. Brace Assembly E - Pages	Min. Brace Anchorage [6]: Form Pour [4] Deck Page D1	Metal [5] Deck Page D2	LONGITUDINAL BRACING REQUIREMENTS: Max. [2] Brace Spacing (ft.)	Brace [3] Reaction P (lbs)	Min. Brace Assembly E - Pages	Min. Brace Anchorage [6]: Form Pour [4] Deck Page D1	Metal [5] Deck Page D2
				2-Way Transverse Brace Pattern (B6.4, B6.5)					4-Way T/L Details (B7.0, B7.1, B7.2, B8.4)				
2	8	54	3/8	14	70	C38AA04WS	N1	L1	28	141	C38AA04WS	N2	L2
3	8	90	1/2	17	143	C12AA04WS	N2	L2	34	285	C12AA04WS	N3	L3
4	8	138	5/8	17	223	C58AA04WS	N3	L3	35	447	C58AA04WS	N5	L5
5	8	193	5/8	17	296	C58AA04WS	N3	L3	33	592	C58AA04WS	N6	L6
6	8	251	5/8	17	385	C58AA04WS	N4	L4	33	771	C58AA06WS	N8	L8
				TRANSVERSE, LONGITUDINAL BRACING REQUIREMENTS (SELECT EITHER T/L OR SPLAY)									
				4-Way T/L Details (B7.0, B7.1, B7.2, B8.4)					4-Way Splay Details (B9.0, B9.1, B9.1.1)				
2	8	54	3/8	14	70	C38AA04WS	N1	L1	14	95	C38AA04WS	N1	L1
3	8	90	1/2	17	143	C12AA04WS	N2	L2	17	191	C12AA04WS	N2	L2
4	8	138	5/8	17	223	C58AA04WS	N3	L3	17	300	C58AA04WS	N3	L3
5	8	193	5/8	17	296	C58AA04WS	N3	L3	17	397	C58AA04WS	N4	L4
6	8	251	5/8	17	385	C58AA04WS	N4	L4	17	517	C58AA04WS	N6	L6

SINGLE HUNG PIPE CAST IRON PIPE (EMPTY) [10] — **MAXIMUM SEISMIC DESIGN FORCE = 0.50 G's**

				2-Way Transverse Brace Pattern (B6.4, B6.5)					4-Way T/L Details (B7.0, B7.1, B7.2, B8.4)				
2	8	39	3/8	18	66	C38AA04WS	N1	L1	37	132	C38AA04WS	N2	L2
3	8	56	1/2	22	113	C12AA04WS	N2	L2	40	208	C12AA04WS	N3	L3
4	8	80	5/8	23	170	C58AA04WS	N2	L2	40	296	C58AA04WS	N3	L3
5	8	102	5/8	23	214	C58AA04WS	N3	L3	40	376	C58AA04WS	N4	L4
6	8	119	5/8	24	266	C58AA04WS	N3	L3	40	440	C58AA04WS	N5	L5
				TRANSVERSE, LONGITUDINAL BRACING REQUIREMENTS (SELECT EITHER T/L OR SPLAY)									
				4-Way T/L Details (B7.0, B7.1, B7.2, B8.4)					4-Way Splay Details (B9.0, B9.1, B9.1.1)				
2	8	39	3/8	18	66	C38AA04WS	N1	L1	18	89	C38AA04WS	N1	L1
3	8	56	1/2	22	113	C12AA04WS	N2	L2	22	151	C12AA04WS	N2	L2
4	8	80	5/8	23	170	C58AA04WS	N2	L2	23	228	C58AA04WS	N3	L3
5	8	102	5/8	23	214	C58AA04WS	N3	L3	23	288	C58AA04WS	N3	L3
6	8	119	5/8	24	266	C58AA04WS	N3	L3	24	356	C58AA04WS	N4	L4

1. TVL = DL + Fv + ($0.2S_{DS}$/1.4 x Wp). All Terms Are Working Loads.
2. Reductions In Actual Installed Brace Spacing Will Result In An Equal Percentage Reduction In Brace Reaction. As An Option When This Occurs ISAT May Substitute An Alternate Anchorage From Tables D1 or D2 Which Meets or Exceeds The Lowered Brace Reaction.
3. At Max. 60 Degree Brace Inclination.
4. Min. 3,000 psi NWC. Any "N Series" Connection May Be Utilized Having A Numeric Designation Equal To Or Higher Than That Shown.
5. Min. 3,000 psi NWC or LWC. Any "L Series" Connection May Be Utilized Having A Numeric Designation Equal To Or Higher Than That Shown.
6. As An Alternate, Brace Anchorage Connections To Structure May Be Employed Using Any Detail From Structural Connections Section "D" Series Details Where Assembly Design Value Meets Or Exceeds Brace Reaction.
7. For Trade Specific Bracing Installation Notes, Refer To Page 10.1
8. Utilize Any "G" Series Vertical Support Connection Having A Design Value Equal To Or Greater Than The Corresponding "Rod Total Vertical Load".
9. Based on Water Filled Pipe Weight. Refer to X-Series Weight Charts.
10. Based on Empty Pipe Weight. Refer to X-Series Weight Charts.

REGISTERED PROFESSIONAL ENGINEER MARCIN WASAZNIK S-6612 STRUCTURAL STATE OF CALIFORNIA

ISAT
A Division of Tomarco Contractor Specialties
International Seismic Application Technology
14848 Northam Street, La Mirada, CA 90638
877-999-4728 (Toll Free) 714-523-0845 (Fax)
www.isatsb.com

01/26/2024 OPM-0403: Reviewed for Code Compliance by William Staehlin Page 372 of 1157

CABLE BRACING REQUIREMENTS [7]:

SINGLE HUNG PIPE CAST IRON PIPE (WATER FILLED) [9] — MAXIMUM SEISMIC DESIGN FORCE = 0.75 G's

Requires Use of ISAT Seismic Brackets. Use of Any Non-ISAT Bracket Voids Engineering. — *2013 California Building Code Compliant*

Maximum Pipe Diameter (in.)	Max. Vertical Support Spacing (ft.)	Rod [1] Total Vertical Load (lbs)	Min. [8] Vertical Support Rod Dia. (in.)	TRANSVERSE BRACING REQUIREMENTS: Max. [2] Brace Spacing (ft.)	Brace [3] Reaction P (lbs)	Min. Brace Assembly E - Pages	Min. Brace Anchorage [6]: Form Pour [4] Deck Page D1	Metal [5] Deck Page D2	LONGITUDINAL BRACING REQUIREMENTS: Max. [2] Brace Spacing (ft.)	Brace [3] Reaction P (lbs)	Min. Brace Assembly E - Pages	Min. Brace Anchorage [6]: Form Pour [4] Deck Page D1	Metal [5] Deck Page D2
				2-Way Transverse Brace Pattern (B6.4, B6.5)					4-Way T/L Details (B7.0, B7.1, B7.2, B8.4)				
2	8	54	3/8	12	50	C38AA04WS	N1	L1	23	100	C38AA04WS	N1	L1
3	8	90	1/2	14	101	C12AA04WS	N2	L2	28	202	C12AA04WS	N3	L3
4	8	138	5/8	14	158	C58AA04WS	N2	L2	28	316	C58AA04WS	N4	L4
5	8	193	5/8	13	209	C58AA04WS	N3	L3	27	419	C58AA04WS	N5	L5
6	8	251	5/8	14	273	C58AA04WS	N3	L3	27	545	C58AA04WS	N6	L6
				TRANSVERSE, LONGITUDINAL BRACING REQUIREMENTS (SELECT EITHER T/L OR SPLAY)									
				4-Way T/L Details (B7.0, B7.1, B7.2, B8.4)					4-Way Splay Details (B9.0, B9.1, B9.1.1)				
2	8	54	3/8	12	50	C38AA04WS	N1	L1	12	67	C38AA04WS	N1	L1
3	8	90	1/2	14	101	C12AA04WS	N2	L2	14	135	C12AA04WS	N2	L2
4	8	138	5/8	14	158	C58AA04WS	N2	L2	14	212	C58AA04WS	N3	L3
5	8	193	5/8	13	209	C58AA04WS	N3	L3	13	281	C58AA04WS	N3	L3
6	8	251	5/8	14	273	C58AA04WS	N3	L3	14	366	C58AA04WS	N4	L4

SINGLE HUNG PIPE CAST IRON PIPE (EMPTY) [10] — MAXIMUM SEISMIC DESIGN FORCE = 0.75 G's

				2-Way Transverse Brace Pattern (B6.4, B6.5)					4-Way T/L Details (B7.0, B7.1, B7.2, B8.4)				
2	8	39	3/8	15	47	C38AA04WS	N1	L1	30	94	C38AA04WS	N1	L1
3	8	56	1/2	18	80	C12AA04WS	N1	L1	35	159	C12AA04WS	N2	L2
4	8	80	5/8	19	120	C58AA04WS	N2	L2	38	240	C58AA04WS	N3	L3
5	8	102	5/8	19	152	C58AA04WS	N2	L2	37	303	C58AA04WS	N4	L4
6	8	119	5/8	20	188	C58AA04WS	N2	L2	39	376	C58AA04WS	N4	L4
				TRANSVERSE, LONGITUDINAL BRACING REQUIREMENTS (SELECT EITHER T/L OR SPLAY)									
				4-Way T/L Details (B7.0, B7.1, B7.2, B8.4)					4-Way Splay Details (B9.0, B9.1, B9.1.1)				
2	8	39	3/8	15	47	C38AA04WS	N1	L1	15	63	C38AA04WS	N1	L1
3	8	56	1/2	18	80	C12AA04WS	N1	L1	18	107	C12AA04WS	N2	L2
4	8	80	5/8	19	120	C58AA04WS	N2	L2	19	161	C58AA04WS	N2	L2
5	8	102	5/8	19	152	C58AA04WS	N2	L2	19	204	C58AA04WS	N3	L3
6	8	119	5/8	20	188	C58AA04WS	N2	L2	20	252	C58AA04WS	N3	L3

1. TVL = DL + Fv + ($0.2S_{DS}$/1.4 x Wp). All Terms Are Working Loads.
2. Reductions In Actual Installed Brace Spacing Will Result In An Equal Percentage Reduction In Brace Reaction. As An Option When This Occurs ISAT May Substitute An Alternate Anchorage From Tables D1 or D2 Which Meets or Exceeds The Lowered Brace Reaction.
3. At Max. 30 Degree Brace Inclination.
4. Min. 3,000 psi NWC. Any "N Series" Connection May Be Utilized Having A Numeric Designation Equal To Or Higher Than That Shown.
5. Min. 3,000 psi NWC or LWC. Any "L Series" Connection May Be Utilized Having A Numeric Designation Equal To Or Higher Than That Shown.
6. As An Alternate, Brace Anchorage Connections To Structure May Be Employed Using Any Detail From Structural Connections Section "D" Series Details Where Assembly Design Value Meets Or Exceeds Brace Reaction.
7. For Trade Specific Bracing Installation Notes, Refer To Page 10.1
8. Utilize Any "G" Series Vertical Support Connection Having A Design Value Equal To Or Greater Than The Corresponding "Rod Total Vertical Load".
9. Based on Water Filled Pipe Weight. Refer to X-Series Weight Charts.
10. Based on Empty Pipe Weight. Refer to X-Series Weight Charts.

REGISTERED PROFESSIONAL ENGINEER MARCIN WASAZNIK S-6612 STRUCTURAL STATE OF CALIFORNIA

ISAT
A Division of Tomarco Contractor Specialties
International Seismic Application Technology
14848 Northam Street, La Mirada, CA 90638
877-999-4728 (Toll Free) 714-523-0845 (Fax)
www.isatsb.com

Rev. 0
11/28/18
Page
C14-0.75-30

REVIEWED FOR CODE COMPLIANCE OPM-0403 William Staehlin DATE 1-26-2024 CALIFORNIA BUILDING CODE 2022

CABLE BRACING REQUIREMENTS [7]:

SINGLE HUNG PIPE CAST IRON PIPE (WATER FILLED) [9] — **MAXIMUM SEISMIC DESIGN FORCE = 0.75 G's**

Requires Use of ISAT Seismic Brackets. Use of Any Non-ISAT Bracket Voids Engineering. — *2013 California Building Code Compliant*

Maximum Pipe Diameter (in.)	Max. Vertical Support Spacing (ft.)	Rod [1] Total Vertical Load (lbs)	Min. [8] Vertical Support Rod Dia. (in.)	TRANSVERSE BRACING REQUIREMENTS: Max. [2] Brace Spacing (ft.)	Brace [3] Reaction P (lbs)	Min. Brace Assembly E - Pages	Min. Brace Anchorage [6]: Form Pour [4] Deck Page D1	Metal [5] Deck Page D2	LONGITUDINAL BRACING REQUIREMENTS: Max. [2] Brace Spacing (ft.)	Brace [3] Reaction P (lbs)	Min. Brace Assembly E - Pages	Min. Brace Anchorage [6]: Form Pour [4] Deck Page D1	Metal [5] Deck Page D2
				2-Way Transverse Brace Pattern (B6.4, B6.5)					**4-Way T/L Details (B7.0, B7.1, B7.2, B8.4)**				
2	8	54	3/8	12	67	C38AA04WS	N1	L1	23	134	C38AA04WS	N2	L2
3	8	90	1/2	14	136	C12AA04WS	N2	L2	28	272	C12AA04WS	N3	L3
4	8	138	5/8	14	213	C58AA04WS	N3	L3	28	425	C58AA04WS	N5	L5
5	8	193	5/8	13	282	C58AA04WS	N3	L3	27	564	C58AA04WS	N6	L6
6	8	251	5/8	14	367	C58AA04WS	N4	L4	27	734	C58AA06WS	N8	L8
				TRANSVERSE, LONGITUDINAL BRACING REQUIREMENTS (SELECT EITHER T/L OR SPLAY)									
				4-Way T/L Details (B7.0, B7.1, B7.2, B8.4)					**4-Way Splay Details (B9.0, B9.1, B9.1.1)**				
2	8	54	3/8	12	67	C38AA04WS	N1	L1	12	90	C38AA04WS	N1	L1
3	8	90	1/2	14	136	C12AA04WS	N2	L2	14	182	C12AA04WS	N2	L2
4	8	138	5/8	14	213	C58AA04WS	N3	L3	14	285	C58AA04WS	N3	L3
5	8	193	5/8	13	282	C58AA04WS	N3	L3	13	378	C58AA04WS	N4	L4
6	8	251	5/8	14	367	C58AA04WS	N4	L4	14	493	C58AA04WS	N5	L5

SINGLE HUNG PIPE CAST IRON PIPE (EMPTY) [10] — **MAXIMUM SEISMIC DESIGN FORCE = 0.75 G's**

				2-Way Transverse Brace Pattern (B6.4, B6.5)					**4-Way T/L Details (B7.0, B7.1, B7.2, B8.4)**				
2	8	39	3/8	15	63	C38AA04WS	N1	L1	30	126	C38AA04WS	N2	L2
3	8	56	1/2	18	107	C12AA04WS	N2	L2	35	215	C12AA04WS	N3	L3
4	8	80	5/8	19	162	C58AA04WS	N2	L2	38	324	C58AA04WS	N4	L4
5	8	102	5/8	19	204	C58AA04WS	N3	L3	37	409	C58AA04WS	N5	L5
6	8	119	5/8	20	253	C58AA04WS	N3	L3	39	506	C58AA04WS	N6	L6
				TRANSVERSE, LONGITUDINAL BRACING REQUIREMENTS (SELECT EITHER T/L OR SPLAY)									
				4-Way T/L Details (B7.0, B7.1, B7.2, B8.4)					**4-Way Splay Details (B9.0, B9.1, B9.1.1)**				
2	8	39	3/8	15	63	C38AA04WS	N1	L1	15	85	C38AA04WS	N1	L1
3	8	56	1/2	18	107	C12AA04WS	N2	L2	18	144	C12AA04WS	N2	L2
4	8	80	5/8	19	162	C58AA04WS	N2	L2	19	217	C58AA04WS	N3	L3
5	8	102	5/8	19	204	C58AA04WS	N3	L3	19	274	C58AA04WS	N3	L3
6	8	119	5/8	20	253	C58AA04WS	N3	L3	20	340	C58AA04WS	N4	L4

1. TVL = DL + Fv + ($0.2S_{DS}$/1.4 x Wp). All Terms Are Working Loads.
2. Reductions In Actual Installed Brace Spacing Will Result In An Equal Percentage Reduction In Brace Reaction. As An Option When This Occurs ISAT May Substitute An Alternate Anchorage From Tables D1 or D2 Which Meets or Exceeds The Lowered Brace Reaction.
3. At Max. 50 Degree Brace Inclination.
4. Min. 3,000 psi NWC. Any "N Series" Connection May Be Utilized Having A Numeric Designation Equal To Or Higher Than That Shown.
5. Min. 3,000 psi NWC or LWC. Any "L Series" Connection May Be Utilized Having A Numeric Designation Equal To Or Higher Than That Shown.
6. As An Alternate, Brace Anchorage Connections To Structure May Be Employed Using Any Detail From Structural Connections Section "D" Series Details Where Assembly Design Value Meets Or Exceeds Brace Reaction.
7. For Trade Specific Bracing Installation Notes, Refer To Page 10.1
8. Utilize Any "G" Series Vertical Support Connection Having A Design Value Equal To Or Greater Than The Corresponding "Rod Total Vertical Load".
9. Based on Water Filled Pipe Weight. Refer to X-Series Weight Charts.
10. Based on Empty Pipe Weight. Refer to X-Series Weight Charts.

REGISTERED PROFESSIONAL ENGINEER MARCIN WASAZNIK S-6612 STRUCTURAL STATE OF CALIFORNIA

ISAT
A Division of Tomarco Contractor Specialties
International Seismic Application Technology
14848 Northam Street, La Mirada, CA 90638
877-999-4728 (Toll Free) 714-523-0845 (Fax)
www.isatsb.com

01/26/2024 OPM-0403: Reviewed for Code Compliance by William Staehlin Page 374 of 1157

CABLE BRACING REQUIREMENTS [7]:

SINGLE HUNG PIPE CAST IRON PIPE (WATER FILLED) [9] — MAXIMUM SEISMIC DESIGN FORCE = 0.75 G's

Requires Use of ISAT Seismic Brackets. Use of Any Non-ISAT Bracket Voids Engineering. — *2013 California Building Code Compliant*

Maximum Pipe Diameter (in.)	Max. Vertical Support Spacing (ft.)	Rod [1] Total Vertical Load (lbs)	Min. [8] Vertical Support Rod Dia. (in.)	TRANSVERSE BRACING REQUIREMENTS: Max. [2] Brace Spacing (ft.)	Brace [3] Reaction P (lbs)	Min. Brace Assembly E - Pages	Min. Brace Anchorage [6]: Form Pour [4] Deck Page D1	Metal [5] Deck Page D2	LONGITUDINAL BRACING REQUIREMENTS: Max. [2] Brace Spacing (ft.)	Brace [3] Reaction P (lbs)	Min. Brace Assembly E - Pages	Min. Brace Anchorage [6]: Form Pour [4] Deck Page D1	Metal [5] Deck Page D2
				2-Way Transverse Brace Pattern (B6.4, B6.5)					4-Way T/L Details (B7.0, B7.1, B7.2, B8.4)				
2	8	54	3/8	12	86	C38AA04WS	N1	L1	23	173	C38AA04WS	N2	L2
3	8	90	1/2	14	175	C12AA04WS	N2	L2	28	349	C12AA04WS	N4	L4
4	8	138	5/8	14	273	C58AA04WS	N3	L3	28	547	C58AA04WS	N6	L6
5	8	193	5/8	13	362	C58AA04WS	N4	L4	27	725	C58AA06WS	N8	L8
6	8	251	5/8	14	472	C58AA04WS	N5	L5	27	944	C58AA06WS	N10	L10
				TRANSVERSE, LONGITUDINAL BRACING REQUIREMENTS (SELECT EITHER T/L OR SPLAY)									
				4-Way T/L Details (B7.0, B7.1, B7.2, B8.4)					4-Way Splay Details (B9.0, B9.1, B9.1.1)				
2	8	54	3/8	12	86	C38AA04WS	N1	L1	12	116	C38AA04WS	N2	L2
3	8	90	1/2	14	175	C12AA04WS	N2	L2	14	234	C12AA04WS	N3	L3
4	8	138	5/8	14	273	C58AA04WS	N3	L3	14	367	C58AA04WS	N4	L4
5	8	193	5/8	13	362	C58AA04WS	N4	L4	13	486	C58AA04WS	N5	L5
6	8	251	5/8	14	472	C58AA04WS	N5	L5	14	634	C58AA04WS	N7	L7

SINGLE HUNG PIPE CAST IRON PIPE (EMPTY) [10] — MAXIMUM SEISMIC DESIGN FORCE = 0.75 G's

				2-Way Transverse Brace Pattern (B6.4, B6.5)					4-Way T/L Details (B7.0, B7.1, B7.2, B8.4)				
2	8	39	3/8	15	81	C38AA04WS	N1	L1	30	162	C38AA04WS	N2	L2
3	8	56	1/2	18	138	C12AA04WS	N2	L2	35	276	C12AA04WS	N3	L3
4	8	80	5/8	19	208	C58AA04WS	N3	L3	38	416	C58AA04WS	N5	L5
5	8	102	5/8	19	263	C58AA04WS	N3	L3	37	525	C58AA04WS	N6	L6
6	8	119	5/8	20	325	C58AA04WS	N4	L4	39	651	C58AA04WS	N7	L7
				TRANSVERSE, LONGITUDINAL BRACING REQUIREMENTS (SELECT EITHER T/L OR SPLAY)									
				4-Way T/L Details (B7.0, B7.1, B7.2, B8.4)					4-Way Splay Details (B9.0, B9.1, B9.1.1)				
2	8	39	3/8	15	81	C38AA04WS	N1	L1	15	109	C38AA04WS	N2	L2
3	8	56	1/2	18	138	C12AA04WS	N2	L2	18	185	C12AA04WS	N2	L2
4	8	80	5/8	19	208	C58AA04WS	N3	L3	19	279	C58AA04WS	N3	L3
5	8	102	5/8	19	263	C58AA04WS	N3	L3	19	352	C58AA04WS	N4	L4
6	8	119	5/8	20	325	C58AA04WS	N4	L4	20	437	C58AA04WS	N5	L5

1. TVL = DL + Fv + ($0.2S_{DS}$/1.4 x Wp). All Terms Are Working Loads.
2. Reductions In Actual Installed Brace Spacing Will Result In An Equal Percentage Reduction In Brace Reaction. As An Option When This Occurs ISAT May Substitute An Alternate Anchorage From Tables D1 or D2 Which Meets or Exceeds The Lowered Brace Reaction.
3. At Max. 60 Degree Brace Inclination.
4. Min. 3,000 psi NWC. Any "N Series" Connection May Be Utilized Having A Numeric Designation Equal To Or Higher Than That Shown.
5. Min. 3,000 psi NWC or LWC. Any "L Series" Connection May Be Utilized Having A Numeric Designation Equal To Or Higher Than That Shown.
6. As An Alternate, Brace Anchorage Connections To Structure May Be Employed Using Any Detail From Structural Connections Section "D" Series Details Where Assembly Design Value Meets Or Exceeds Brace Reaction.
7. For Trade Specific Bracing Installation Notes, Refer To Page 10.1
8. Utilize Any "G" Series Vertical Support Connection Having A Design Value Equal To Or Greater Than The Corresponding "Rod Total Vertical Load".
9. Based on Water Filled Pipe Weight. Refer to X-Series Weight Charts.
10. Based on Empty Pipe Weight. Refer to X-Series Weight Charts.

REGISTERED PROFESSIONAL ENGINEER MARCIN WASAZNIK S-6612 STRUCTURAL STATE OF CALIFORNIA

ISAT
A Division of Tomarco Contractor Specialties
International Seismic Application Technology
14848 Northam Street, La Mirada, CA 90638
877-999-4728 (Toll Free) 714-523-0845 (Fax)
www.isatsb.com

Rev. 0
11/28/18
Page
C14-0.75-60

REVIEWED FOR CODE COMPLIANCE OPM-0403 William Staehlin DATE 01/26/2024 CALIFORNIA BUILDING CODE 2022

CABLE BRACING REQUIREMENTS [7]:

SINGLE HUNG PIPE CAST IRON PIPE (WATER FILLED) [9] — **MAXIMUM SEISMIC DESIGN FORCE = 1.00 G's**

Requires Use of ISAT Seismic Brackets. Use of Any Non-ISAT Bracket Voids Engineering. — *2013 California Building Code Compliant*

Maximum Pipe Diameter (in.)	Max. Vertical Support Spacing (ft.)	Rod [1] Total Vertical Load (lbs)	Min. [8] Vertical Support Rod Dia. (in.)	TRANSVERSE BRACING REQUIREMENTS: Max. [2] Brace Spacing (ft.)	Brace [3] Reaction P (lbs)	Min. Brace Assembly E - Pages	Min. Brace Anchorage [6]: Form Pour [4] Deck Page D1	Metal [5] Deck Page D2	LONGITUDINAL BRACING REQUIREMENTS: Max. [2] Brace Spacing (ft.)	Brace [3] Reaction P (lbs)	Min. Brace Assembly E - Pages	Min. Brace Anchorage [6]: Form Pour [4] Deck Page D1	Metal [5] Deck Page D2
				2-Way Transverse Brace Pattern (B6.4, B6.5)					**4-Way T/L Details (B7.0, B7.1, B7.2, B8.4)**				
2	8	54	3/8	10	58	C38AA04WS	N1	L1	17	101	C38AA04WS	N2	L2
3	8	90	1/2	12	116	C12AA04WS	N2	L2	21	205	C12AA04WS	N3	L3
4	8	138	5/8	12	182	C58AA04WS	N2	L2	23	347	C58AA04WS	N4	L4
5	8	193	5/8	12	242	C58AA04WS	N3	L3	23	483	C58AA04WS	N5	L5
6	8	251	5/8	12	315	C58AA04WS	N4	L4	23	629	C58AA04WS	N7	L7
				TRANSVERSE, LONGITUDINAL BRACING REQUIREMENTS (SELECT EITHER T/L OR SPLAY)									
				4-Way T/L Details (B7.0, B7.1, B7.2, B8.4)					**4-Way Splay Details (B9.0, B9.1, B9.1.1)**				
2	8	54	3/8	10	58	C38AA04WS	N1	L1	10	77	C38AA04WS	N1	L1
3	8	90	1/2	12	116	C12AA04WS	N2	L2	12	156	C12AA04WS	N2	L2
4	8	138	5/8	12	182	C58AA04WS	N2	L2	12	245	C58AA04WS	N3	L3
5	8	193	5/8	12	242	C58AA04WS	N3	L3	12	324	C58AA04WS	N4	L4
6	8	251	5/8	12	315	C58AA04WS	N4	L4	12	422	C58AA04WS	N5	L5

SINGLE HUNG PIPE CAST IRON PIPE (EMPTY) [10] — **MAXIMUM SEISMIC DESIGN FORCE = 1.00 G's**

				2-Way Transverse Brace Pattern (B6.4, B6.5)					**4-Way T/L Details (B7.0, B7.1, B7.2, B8.4)**				
2	8	39	3/8	13	54	C38AA04WS	N1	L1	24	100	C38AA04WS	N2	L2
3	8	56	1/2	15	92	C12AA04WS	N1	L1	31	184	C12AA04WS	N2	L2
4	8	80	5/8	16	139	C58AA04WS	N2	L2	32	278	C58AA04WS	N3	L3
5	8	102	5/8	16	175	C58AA04WS	N2	L2	32	350	C58AA04WS	N4	L4
6	8	119	5/8	17	217	C58AA04WS	N3	L3	34	434	C58AA04WS	N5	L5
				TRANSVERSE, LONGITUDINAL BRACING REQUIREMENTS (SELECT EITHER T/L OR SPLAY)									
				4-Way T/L Details (B7.0, B7.1, B7.2, B8.4)					**4-Way Splay Details (B9.0, B9.1, B9.1.1)**				
2	8	39	3/8	13	54	C38AA04WS	N1	L1	13	73	C38AA04WS	N1	L1
3	8	56	1/2	15	92	C12AA04WS	N1	L1	15	123	C12AA04WS	N2	L2
4	8	80	5/8	16	139	C58AA04WS	N2	L2	16	186	C58AA04WS	N2	L2
5	8	102	5/8	16	175	C58AA04WS	N2	L2	16	235	C58AA04WS	N3	L3
6	8	119	5/8	17	217	C58AA04WS	N3	L3	17	291	C58AA04WS	N3	L3

1. TVL = DL + Fv + ($0.2S_{DS}$/1.4 x Wp). All Terms Are Working Loads.
2. Reductions In Actual Installed Brace Spacing Will Result In An Equal Percentage Reduction In Brace Reaction. As An Option When This Occurs ISAT May Substitute An Alternate Anchorage From Tables D1 or D2 Which Meets or Exceeds The Lowered Brace Reaction
3. At Max. 30 Degree Brace Inclination.
4. Min. 3,000 psi NWC. Any "N Series" Connection May Be Utilized Having A Numeric Designation Equal To Or Higher Than That Shown.
5. Min. 3,000 psi NWC or LWC. Any "L Series" Connection May Be Utilized Having A Numeric Designation Equal To Or Higher Than That Shown.
6. As An Alternate, Brace Anchorage Connections To Structure May Be Employed Using Any Detail From Structural Connections Section "D" Series Details Where Assembly Design Value Meets Or Exceeds Brace Reaction.
7. For Trade Specific Bracing Installation Notes, Refer To Page 10.1
8. Utilize Any "G" Series Vertical Support Connection Having A Design Value Equal To Or Greater Than The Corresponding "Rod Total Vertical Load".
9. Based on Water Filled Pipe Weight. Refer to X-Series Weight Charts.
10. Based on Empty Pipe Weight. Refer to X-Series Weight Charts.

REGISTERED PROFESSIONAL ENGINEER MARCIN WASAZNIK S-6612 STRUCTURAL STATE OF CALIFORNIA

ISAT
A Division of Tomarco Contractor Specialties
International Seismic Application Technology
14848 Northam Street, La Mirada, CA 90638
877-999-4728 (Toll Free) 714-523-0845 (Fax)
www.isatsb.com

Rev. 0
12/11/18

REVIEWED FOR CODE COMPLIANCE
OPM-0403
DATE 01-26-2024
CALIFORNIA BUILDING CODE

CABLE BRACING REQUIREMENTS [7]:

SINGLE HUNG PIPE CAST IRON PIPE (WATER FILLED) [9] — **MAXIMUM SEISMIC DESIGN FORCE = 1.00 G's**

Requires Use of ISAT Seismic Brackets. Use of Any Non-ISAT Bracket Voids Engineering. — *2013 California Building Code Compliant*

Maximum Pipe Diameter (in.)	Max. Vertical Support Spacing (ft.)	Rod [1] Total Vertical Load (lbs)	Min. [8] Vertical Support Rod Dia. (in.)	TRANSVERSE BRACING REQUIREMENTS: Max. [2] Brace Spacing (ft.)	Brace [3] Reaction P (lbs)	Min. Brace Assembly E - Pages	Min. Brace Anchorage [6]: Form Pour [4] Deck Page D1	Metal [5] Deck Page D2	LONGITUDINAL BRACING REQUIREMENTS: Max. [2] Brace Spacing (ft.)	Brace [3] Reaction P (lbs)	Min. Brace Assembly E - Pages	Min. Brace Anchorage [6]: Form Pour [4] Deck Page D1	Metal [5] Deck Page D2
				2-Way Transverse Brace Pattern (B6.4, B6.5)					**4-Way T/L Details (B7.0, B7.1, B7.2, B8.4)**				
2	8	54	3/8	10	78	C38AA04WS	N1	L1	17	136	C38AA04WS	N2	L2
3	8	90	1/2	12	157	C12AA04WS	N2	L2	21	276	C12AA04WS	N3	L3
4	8	138	5/8	12	246	C58AA04WS	N3	L3	23	467	C58AA04WS	N5	L5
5	8	193	5/8	12	326	C58AA04WS	N4	L4	23	651	C58AA04WS	N7	L7
6	8	251	5/8	12	424	C58AA04WS	N5	L5	23	848	C58AA06WS	N9	L9
				TRANSVERSE, LONGITUDINAL BRACING REQUIREMENTS (SELECT EITHER T/L OR SPLAY)									
				4-Way T/L Details (B7.0, B7.1, B7.2, B8.4)					**4-Way Splay Details (B9.0, B9.1, B9.1.1)**				
2	8	54	3/8	10	78	C38AA04WS	N1	L1	10	104	C38AA04WS	N2	L2
3	8	90	1/2	12	157	C12AA04WS	N2	L2	12	211	C12AA04WS	N3	L3
4	8	138	5/8	12	246	C58AA04WS	N3	L3	12	330	C58AA04WS	N4	L4
5	8	193	5/8	12	326	C58AA04WS	N4	L4	12	437	C58AA04WS	N5	L5
6	8	251	5/8	12	424	C58AA04WS	N5	L5	12	569	C58AA04WS	N6	L6

SINGLE HUNG PIPE CAST IRON PIPE (EMPTY) [10] — **MAXIMUM SEISMIC DESIGN FORCE = 1.00 G's**

				2-Way Transverse Brace Pattern (B6.4, B6.5)					**4-Way T/L Details (B7.0, B7.1, B7.2, B8.4)**				
2	8	39	3/8	13	73	C38AA04WS	N1	L1	24	135	C38AA04WS	N2	L2
3	8	56	1/2	15	124	C12AA04WS	N2	L2	31	248	C12AA04WS	N3	L3
4	8	80	5/8	16	187	C58AA04WS	N2	L2	32	374	C58AA04WS	N4	L4
5	8	102	5/8	16	236	C58AA04WS	N3	L3	32	472	C58AA04WS	N5	L5
6	8	119	5/8	17	292	C58AA04WS	N3	L3	34	584	C58AA04WS	N6	L6
				TRANSVERSE, LONGITUDINAL BRACING REQUIREMENTS (SELECT EITHER T/L OR SPLAY)									
				4-Way T/L Details (B7.0, B7.1, B7.2, B8.4)					**4-Way Splay Details (B9.0, B9.1, B9.1.1)**				
2	8	39	3/8	13	73	C38AA04WS	N1	L1	13	98	C38AA04WS	N1	L1
3	8	56	1/2	15	124	C12AA04WS	N2	L2	15	166	C12AA04WS	N2	L2
4	8	80	5/8	16	187	C58AA04WS	N2	L2	16	251	C58AA04WS	N3	L3
5	8	102	5/8	16	236	C58AA04WS	N3	L3	16	317	C58AA04WS	N4	L4
6	8	119	5/8	17	292	C58AA04WS	N3	L3	17	392	C58AA04WS	N4	L4

1. TVL = DL + Fv + ($0.2S_{DS}$/1.4 x Wp). All Terms Are Working Loads.
2. Reductions In Actual Installed Brace Spacing Will Result In An Equal Percentage Reduction In Brace Reaction. As An Option When This Occurs ISAT May Substitute An Alternate Anchorage From Tables D1 or D2 Which Meets or Exceeds The Lowered Brace Reaction
3. At Max. 50 Degree Brace Inclination.
4. Min. 3,000 psi NWC. Any "N Series" Connection May Be Utilized Having A Numeric Designation Equal To Or Higher Than That Shown.
5. Min. 3,000 psi NWC or LWC. Any "L Series" Connection May Be Utilized Having A Numeric Designation Equal To Or Higher Than That Shown.
6. As An Alternate, Brace Anchorage Connections To Structure May Be Employed Using Any Detail From Structural Connections Section "D" Series Details Where Assembly Design Value Meets Or Exceeds Brace Reaction.
7. For Trade Specific Bracing Installation Notes, Refer To Page 10.1
8. Utilize Any "G" Series Vertical Support Connection Having A Design Value Equal To Or Greater Than The Corresponding "Rod Total Vertical Load".
9. Based on Water Filled Pipe Weight. Refer to X-Series Weight Charts.
10. Based on Empty Pipe Weight. Refer to X-Series Weight Charts.

REGISTERED PROFESSIONAL ENGINEER MARCIN WASAZNIK S-6612 STRUCTURAL STATE OF CALIFORNIA

ISAT
A Division of Tomarco Contractor Specialties
International Seismic Application Technology
14848 Northam Street, La Mirada, CA 90638
877-999-4728 (Toll Free) 714-523-0845 (Fax)
www.isatsb.com

Rev. 0
12/11/18

01/26/2024 OPM-0403: Reviewed for Code Compliance by William Staehlin Page 377 of 1157

CABLE BRACING REQUIREMENTS [7]:

SINGLE HUNG PIPE CAST IRON PIPE (WATER FILLED) [9] — MAXIMUM SEISMIC DESIGN FORCE = 1.00 G's

Requires Use of ISAT Seismic Brackets. Use of Any Non-ISAT Bracket Voids Engineering. — *2013 California Building Code Compliant*

Maximum Pipe Diameter (in.)	Max. Vertical Support Spacing (ft.)	Rod [1] Total Vertical Load (lbs)	Min. [8] Vertical Support Rod Dia. (in.)	TRANSVERSE BRACING REQUIREMENTS: Max. [2] Brace Spacing (ft.)	Brace [3] Reaction P (lbs)	Min. Brace Assembly E - Pages	Min. Brace Anchorage [6]: Form Pour [4] Deck Page D1	Metal [5] Deck Page D2	LONGITUDINAL BRACING REQUIREMENTS: Max. [2] Brace Spacing (ft.)	Brace [3] Reaction P (lbs)	Min. Brace Assembly E - Pages	Min. Brace Anchorage [6]: Form Pour [4] Deck Page D1	Metal [5] Deck Page D2
				2-Way Transverse Brace Pattern (B6.4, B6.5)					**4-Way T/L Details (B7.0, B7.1, B7.2, B8.4)**				
2	8	54	3/8	10	100	C38AA04WS	N1	L1	17	175	C38AA04WS	N2	L2
3	8	90	1/2	12	202	C12AA04WS	N3	L3	21	354	C12AA04WS	N4	L4
4	8	138	5/8	12	316	C58AA04WS	N4	L4	23	601	C58AA04WS	N7	L7
5	8	193	5/8	12	419	C58AA04WS	N5	L5	23	837	C58AA06WS	N9	L9
6	8	251	5/8	12	545	C58AA04WS	N6	L6	23	1,090	C58AA06WS	N11	L11
				TRANSVERSE, LONGITUDINAL BRACING REQUIREMENTS (SELECT EITHER T/L OR SPLAY)									
				4-Way T/L Details (B7.0, B7.1, B7.2, B8.4)					**4-Way Splay Details (B9.0, B9.1, B9.1.1)**				
2	8	54	3/8	10	100	C38AA04WS	N1	L1	10	134	C38AA04WS	N2	L2
3	8	90	1/2	12	202	C12AA04WS	N3	L3	12	271	C12AA04WS	N3	L3
4	8	138	5/8	12	316	C58AA04WS	N4	L4	12	424	C58AA04WS	N5	L5
5	8	193	5/8	12	419	C58AA04WS	N5	L5	12	562	C58AA04WS	N6	L6
6	8	251	5/8	12	545	C58AA04WS	N6	L6	12	732	C58AA06WS	N8	L8

SINGLE HUNG PIPE CAST IRON PIPE (EMPTY) [10] — MAXIMUM SEISMIC DESIGN FORCE = 1.00 G's

				2-Way Transverse Brace Pattern (B6.4, B6.5)					**4-Way T/L Details (B7.0, B7.1, B7.2, B8.4)**				
2	8	39	3/8	13	94	C38AA04WS	N1	L1	24	173	C38AA04WS	N2	L2
3	8	56	1/2	15	159	C12AA04WS	N2	L2	31	319	C12AA04WS	N4	L4
4	8	80	5/8	16	240	C58AA04WS	N3	L3	32	481	C58AA04WS	N5	L5
5	8	102	5/8	16	303	C58AA04WS	N4	L4	32	607	C58AA04WS	N7	L7
6	8	119	5/8	17	376	C58AA04WS	N4	L4	34	751	C58AA06WS	N8	L8
				TRANSVERSE, LONGITUDINAL BRACING REQUIREMENTS (SELECT EITHER T/L OR SPLAY)									
				4-Way T/L Details (B7.0, B7.1, B7.2, B8.4)					**4-Way Splay Details (B9.0, B9.1, B9.1.1)**				
2	8	39	3/8	13	94	C38AA04WS	N1	L1	13	126	C38AA04WS	N2	L2
3	8	56	1/2	15	159	C12AA04WS	N2	L2	15	214	C12AA04WS	N3	L3
4	8	80	5/8	16	240	C58AA04WS	N3	L3	16	323	C58AA04WS	N4	L4
5	8	102	5/8	16	303	C58AA04WS	N4	L4	16	407	C58AA04WS	N5	L5
6	8	119	5/8	17	376	C58AA04WS	N4	L4	17	504	C58AA04WS	N6	L6

1. TVL = DL + Fv + ($0.2S_{DS}$/1.4 x Wp). All Terms Are Working Loads.
2. Reductions In Actual Installed Brace Spacing Will Result In An Equal Percentage Reduction In Brace Reaction. As An Option When This Occurs ISAT May Substitute An Alternate Anchorage From Tables D1 or D2 Which Meets or Exceeds The Lowered Brace Reaction
3. At Max. 60 Degree Brace Inclination.
4. Min. 3,000 psi NWC. Any "N Series" Connection May Be Utilized Having A Numeric Designation Equal To Or Higher Than That Shown.
5. Min. 3,000 psi NWC or LWC. Any "L Series" Connection May Be Utilized Having A Numeric Designation Equal To Or Higher Than That Shown.
6. As An Alternate, Brace Anchorage Connections To Structure May Be Employed Using Any Detail From Structural Connections Section "D" Series Details Where Assembly Design Value Meets Or Exceeds Brace Reaction.
7. For Trade Specific Bracing Installation Notes, Refer To Page 10.1
8. Utilize Any "G" Series Vertical Support Connection Having A Design Value Equal To Or Greater Than The Corresponding "Rod Total Vertical Load".
9. Based on Water Filled Pipe Weight. Refer to X-Series Weight Charts.
10. Based on Empty Pipe Weight. Refer to X-Series Weight Charts.

REGISTERED PROFESSIONAL ENGINEER MARCIN WASAZNIK S-6612 STRUCTURAL STATE OF CALIFORNIA

ISAT
A Division of Tomarco Contractor Specialties
International Seismic Application Technology
14848 Northam Street, La Mirada, CA 90638
877-999-4728 (Toll Free) 714-523-0845 (Fax)
www.isatsb.com

Rev. 0
12/11/18

REVIEWED FOR CODE COMPLIANCE
OPM-0403
DATE 01-26-2024
CALIFORNIA BUILDING CODE

RIGID BRACING REQUIREMENTS [7]

TRAPEZE MOUNTED PIPING (Plumbing, Mechanical, Process, Medical Gas) — **MAXIMUM SEISMIC DESIGN FORCE = 0.25 G's**

Requires Use of ISAT Seismic Brackets. Use of Any Non-ISAT Bracket Voids Engineering. — *2013 California Building Code Compliant*

Maximum Trapeze Load (lbs/lf)	Max. Vertical Support Spacing (ft.)	Rod [1] Total Vertical Load (lbs)	Min. [8] Vertical Support Rod Dia. (in.)	TRANSVERSE BRACING REQUIREMENTS					LONGITUDINAL BRACING REQUIREMENTS				
				Max. [2] Brace Spacing (ft.)	Brace [3] Reaction P (lbs)	Min. Brace Assembly E - Pages	Min. Brace Anchorage [6] Form Pour [4] Deck Page D1	Min. Brace Anchorage [6] Metal [5] Deck Page D2	Max. [2] Brace Spacing (ft.)	Brace [3] Reaction P (lbs)	Min. Brace Assembly E - Pages	Min. Brace Anchorage [6] Form Pour [4] Deck Page D1	Min. Brace Anchorage [6] Metal [5] Deck Page D2
				1-Way Transverse Brace Pattern (B11.0)					3-Way Transverse, Longitudinal Brace Pattern (B11.2)				
11.0	10	201	3/8	40	127	R38AAEM306	N2	L2	80	165	R38AAEM306	N2	L2
25.0	10	456	1/2	40	289	R12AAEM306	N3	L3	80	375	R12AAEM406	N4	L4
35.0	10	639	1/2	40	404	R12AAEM406	N5	L5	80	525	R12AAEM406	N6	L6
50.0	10	912	1/2	40	577	R12AAEM406	N6	L6	80	751	R12AAEM509	N8	L8
65.0	10	1,186	1/2	40	751	R12AAEM509	N8	L8	80	976	R12AAEM506	N10	L10
75.0	10	1,368	1/2	40	866	R12AAEM506	N9	L9	80	1,126	R12AAEM506	N12	L12
				TRANSVERSE, LONGITUDINAL BRACING REQUIREMENTS									
				4-Way Transverse, Longitudinal Brace Pattern (B11.3)									
100.0	10	1,351	1/2	40	751	R12AAEM509	N8	L8					
125.0	10	1,689	5/8	40	938	R58AAEM506	N10	L10					
150.0	10	2,026	5/8	40	1,126	R58AAEM506	N12	L12					
175.0	10	2,364	3/4	40	1,313	R34CFB1S06	N14	L14					
200.0	10	2,702	3/4	40	1,501	R34CFB2P12	N16	L16					
225.0	10	3,040	3/4	40	1,689	R34CFB2P09	N17	L17					

1. TVL = DL + Fv + ($0.2S_{DS}$/1.4 x Wp). All Terms Are Working Loads. Based On Eccentric Loading, 65% Of Total Load Allocated Per Rod.
2. Reductions In Actual Installed Brace Spacing Will Result In An Equal Percentage Reduction In Brace Reaction. As An Option When This Occurs ISAT May Substitute An Alternate Anchorage From Tables D1 or D2 Which Meets or Exceeds The Lowered Brace Reaction.
3. At Max. 30 Degree Brace Inclination.
4. Min. 3,000 psi NWC. Any "N Series" Connection May Be Utilized Having A Numeric Designation Equal To Or Higher Than That Shown.
5. Min. 3,000 psi NWC or LWC. Any "L Series" Connection May Be Utilized Having A Numeric Designation Equal To Or Higher Than That Shown.
6. As An Alternate, Brace Anchorage Connections To Structure May Be Employed Using Any Detail From Structural Connections Section "D" Series Details Where Assembly Design Value Meets Or Exceeds Brace Reaction.
7. For Trade Specific Bracing Installation Notes, Refer To Page 8.1 or 10.1.
8. Utilize Any "G" Series Vertical Support Connection Having A Design Value Equal To Or Greater Than The Corresponding "Rod Total Vertical Load".

REVIEWED FOR CODE COMPLIANCE
OPM-0403
BY: William Staehlin
DATE: 01-26-2024
CALIFORNIA BUILDING CODE 2022

REGISTERED PROFESSIONAL ENGINEER MARCIN WASAZNIK S-6612 STRUCTURAL STATE OF CALIFORNIA

ISAT
A Division of Tomarco Contractor Specialties
International Seismic Application Technology
14848 Northam Street, La Mirada, CA 90638
877-999-4728 (Toll Free) 714-523-0845 (Fax)
www.isatsb.com

Rev. 0
08/03/18
Page
C15-0.25-30

RIGID BRACING REQUIREMENTS [7]

TRAPEZE MOUNTED PIPING (Plumbing, Mechanical, Process, Medical Gas) — **MAXIMUM SEISMIC DESIGN FORCE = 0.25 G's**

Requires Use of ISAT Seismic Brackets. Use of Any Non-ISAT Bracket Voids Engineering. — *2013 California Building Code Compliant*

Maximum Trapeze Load (lbs/lf)	Max. Vertical Support Spacing (ft.)	Rod [1] Total Vertical Load (lbs)	Min. [8] Vertical Support Rod Dia. (in.)	TRANSVERSE BRACING REQUIREMENTS: Max. [2] Brace Spacing (ft.)	Brace [3] Reaction P (lbs)	Min. Brace Assembly E - Pages	Min. Brace Anchorage [6]: Form Pour [4] Deck Page D1	Metal [5] Deck Page D2	LONGITUDINAL BRACING REQUIREMENTS: Max. [2] Brace Spacing (ft.)	Brace [3] Reaction P (lbs)	Min. Brace Assembly E - Pages	Min. Brace Anchorage [6]: Form Pour [4] Deck Page D1	Metal [5] Deck Page D2
				1-Way Transverse Brace Pattern (B11.0)					3-Way Transverse, Longitudinal Brace Pattern (B11.2)				
11.0	10	312	3/8	40	171	R38AAEM306	N2	L2	80	222	R38AAEM306	N3	L3
25.0	10	708	1/2	40	389	R12AAEM406	N4	L4	80	506	R12AAEM406	N6	L6
35.0	10	991	1/2	40	545	R12AAEM406	N6	L6	80	708	R12AAEM509	N8	L8
50.0	10	1,416	1/2	40	778	R12AAEM509	N8	L8	80	1,011	R12AAEM506	N11	L11
65.0	10	1,841	5/8	40	1,011	R58AAEM506	N11	L11	80	1,315	R58AAEM506	N14	L14
75.0	10	2,124	3/4	40	1,167	R34CFB1P06	N12	L12	80	1,517	R34CFB2P12	N16	L16
100.0	10	2,832	3/4	40	1,556	R34CFB2P12	N16	L16	80	2,022	R34DGB2P09	N21	L21
				TRANSVERSE, LONGITUDINAL BRACING REQUIREMENTS									
				4-Way Transverse, Longitudinal Brace Pattern (B11.3)									
125.0	10	2,319	5/8	40	1,264	R58AAEM506	N13	L13					
150.0	10	2,782	3/4	40	1,517	R34CFB2P12	N16	L16					
175.0	10	3,246	3/4	40	1,770	R34DGB2P09	N18	L18					
200.0	10	3,465	3/4	35	1,770	R34DGB2P09	N18	L18					
225.0	10	3,459	3/4	27	1,536	R34CFB2P12	N16	L16					

1. TVL = DL + Fv + ($0.2S_{DS}$/1.4 x Wp). All Terms Are Working Loads. Based On Eccentric Loading, 65% Of Total Load Allocated Per Rod.
2. Reductions In Actual Installed Brace Spacing Will Result In An Equal Percentage Reduction In Brace Reaction. As An Option When This Occurs ISAT May Substitute An Alternate Anchorage From Tables D1 or D2 Which Meets or Exceeds The Lowered Brace Reaction.
3. At Max. 50 Degree Brace Inclination.
4. Min. 3,000 psi NWC. Any "N Series" Connection May Be Utilized Having A Numeric Designation Equal To Or Higher Than That Shown.
5. Min. 3,000 psi NWC or LWC. Any "L Series" Connection May Be Utilized Having A Numeric Designation Equal To Or Higher Than That Shown.
6. As An Alternate, Brace Anchorage Connections To Structure May Be Employed Using Any Detail From Structural Connections Section "D" Series Details Where Assembly Design Value Meets Or Exceeds Brace Reaction.
7. For Trade Specific Bracing Installation Notes, Refer To Page 8.1 or 10.1.
8. Utilize Any "G" Series Vertical Support Connection Having A Design Value Equal To Or Greater Than The Corresponding "Rod Total Vertical Load".

REVIEWED FOR CODE COMPLIANCE
OPM-0403
BY: William Staehlin
DATE: 01-26-2024
CALIFORNIA BUILDING CODE 2022

REGISTERED PROFESSIONAL ENGINEER MARCIN WASAZNIK S 6612 STRUCTURAL STATE OF CALIFORNIA

ISAT
A Division of Tomarco Contractor Specialties
International Seismic Application Technology
14848 Northam Street, La Mirada, CA 90638
877-999-4728 (Toll Free) 714-523-0845 (Fax)
www.isatsb.com

Rev. 0
10/19/18
Page
C15-0.25-45

RIGID BRACING REQUIREMENTS [7]

TRAPEZE MOUNTED PIPING (Plumbing, Mechanical, Process, Medical Gas) — **MAXIMUM SEISMIC DESIGN FORCE = 0.25 G's**

Requires Use of ISAT Seismic Brackets. Use of Any Non-ISAT Bracket Voids Engineering. — *2013 California Building Code Compliant*

Maximum Trapeze Load (lbs/lf)	Max. Vertical Support Spacing (ft.)	Rod [1] Total Vertical Load (lbs)	Min. [8] Vertical Support Rod Dia. (in.)	TRANSVERSE BRACING REQUIREMENTS: Max. [2] Brace Spacing (ft.)	Brace [3] Reaction P (lbs)	Min. Brace Assembly E - Pages	Min. Brace Anchorage [6]: Form Pour [4] Deck Page D1	Metal [5] Deck Page D2	LONGITUDINAL BRACING REQUIREMENTS: Max. [2] Brace Spacing (ft.)	Brace [3] Reaction P (lbs)	Min. Brace Assembly E - Pages	Min. Brace Anchorage [6]: Form Pour [4] Deck Page D1	Metal [5] Deck Page D2
				1-Way Transverse Brace Pattern (B11.0)					3-Way Transverse, Longitudinal Brace Pattern (B11.2)				
11.0	10	409	3/8	40	220	R38AAEM306	N3	L3	80	286	R38AAEM306	N3	L3
25.0	10	930	1/2	40	500	R12AAEM406	N5	L5	80	650	R12AAEM406	N7	L7
35.0	10	1,301	1/2	40	700	R12AAEM509	N7	L7	80	910	R12AAEM506	N10	L10
50.0	10	1,859	5/8	40	1,000	R58AAEM506	N10	L10	80	1,300	R58AAEM506	N13	L13
				TRANSVERSE, LONGITUDINAL BRACING REQUIREMENTS									
				4-Way Transverse, Longitudinal Brace Pattern (B11.3)									
75.0	10	1,723	5/8	40	975	R58AAEM506	N10	L10					
100.0	10	2,298	5/8	40	1,300	R58AAEM506	N13	L13					
125.0	10	2,606	3/4	34	1,381	R34DGB1S06	N14	L14					
150.0	10	2,808	3/4	28	1,365	R34DGB1S06	N14	L14					
175.0	10	3,027	3/4	24	1,365	R34DGB1S06	N14	L14					
200.0	10	3,246	3/4	21	1,365	R34DGB1S06	N14	L14					
225.0	10	3,492	3/4	19	1,389	R34DGB1S06	N14	L14					

1. TVL = DL + Fv + ($0.2S_{DS}$/1.4 x Wp). All Terms Are Working Loads. Based On Eccentric Loading, 65% Of Total Load Allocated Per Rod.
2. Reductions In Actual Installed Brace Spacing Will Result In An Equal Percentage Reduction In Brace Reaction. As An Option When This Occurs ISAT May Substitute An Alternate Anchorage From Tables D1 or D2 Which Meets or Exceeds The Lowered Brace Reaction.
3. At Max. 60 Degree Brace Inclination.
4. Min. 3,000 psi NWC. Any "N Series" Connection May Be Utilized Having A Numeric Designation Equal To Or Higher Than That Shown.
5. Min. 3,000 psi NWC or LWC. Any "L Series" Connection May Be Utilized Having A Numeric Designation Equal To Or Higher Than That Shown.
6. As An Alternate, Brace Anchorage Connections To Structure May Be Employed Using Any Detail From Structural Connections Section "D" Series Details Where Assembly Design Value Meets Or Exceeds Brace Reaction.
7. For Trade Specific Bracing Installation Notes, Refer To Page 8.1 or 10.1.
8. Utilize Any "G" Series Vertical Support Connection Having A Design Value Equal To Or Greater Than The Corresponding "Rod Total Vertical Load".

REVIEWED FOR CODE COMPLIANCE
HCAI
OPM-0403
BY: William Staehlin
DATE: 01-26-2024
CALIFORNIA BUILDING CODE, 2022

REGISTERED PROFESSIONAL ENGINEER MARCIN WASAZNIK S 6612 STRUCTURAL STATE OF CALIFORNIA

ISAT
A Division of Tomarco Contractor Specialties
International Seismic Application Technology
14848 Northam Street, La Mirada, CA 90638
877-999-4728 (Toll Free) 714-523-0845 (Fax)
www.isatsb.com

Rev. 0
08/03/18
Page
C15-0.25-60

RIGID BRACING REQUIREMENTS [7]

TRAPEZE MOUNTED PIPING (Plumbing, Mechanical, Process, Medical Gas) — **MAXIMUM SEISMIC DESIGN FORCE = 0.50 G's**

Requires Use of ISAT Seismic Brackets. Use of Any Non-ISAT Bracket Voids Engineering. — *2013 California Building Code Compliant*

Maximum Trapeze Load (lbs/lf)	Max. Vertical Support Spacing (ft.)	Rod [1] Total Vertical Load (lbs)	Min. [8] Vertical Support Rod Dia. (in.)	TRANSVERSE BRACING REQUIREMENTS					LONGITUDINAL BRACING REQUIREMENTS				
				Max. [2] Brace Spacing (ft.)	Brace [3] Reaction P (lbs)	Min. Brace Assembly E - Pages	Min. Brace Anchorage [6] Form Pour [4] Deck Page D1	Min. Brace Anchorage [6] Metal [5] Deck Page D2	Max. [2] Brace Spacing (ft.)	Brace [3] Reaction P (lbs)	Min. Brace Assembly E - Pages	Min. Brace Anchorage [6] Form Pour [4] Deck Page D1	Min. Brace Anchorage [6] Metal [5] Deck Page D2
				1-Way Transverse Brace Pattern (B11.0)					3-Way Transverse, Longitudinal Brace Pattern (B11.2)				
11.0	10	305	3/8	40	254	R38AAEM306	N3	L3	80	330	R38AAEM406	N4	L4
25.0	10	693	1/2	40	577	R12AAEM406	N6	L6	80	751	R12AAEM509	N8	L8
35.0	10	970	1/2	40	808	R12AAEM506	N9	L9	80	1,051	R12AAEM506	N11	L11
				TRANSVERSE, LONGITUDINAL BRACING REQUIREMENTS									
				4-Way Transverse, Longitudinal Brace Pattern (B11.3)									
50.0	10	912	1/2	40	751	R12AAEM509	N8	L8					
65.0	10	1,186	1/2	40	976	R12AAEM506	N10	L10					
75.0	10	1,368	1/2	40	1,126	R12AAEM506	N12	L12					
100.0	10	1,824	5/8	40	1,501	R58AAEM606	N16	L16					
125.0	10	2,281	5/8	40	1,876	R58AAEM606	N19	L19					
150.0	10	2,737	3/4	40	2,252	R34DGB2P09	N23	L23					
175.0	10	3,110	3/4	38	2,496	R34DGB2P06	N25	L25					
200.0	10	3,317	3/4	33	2,477	R34DGB2P06	N25	L25					
225.0	10	3,466	3/4	28	2,364	R34DGB2P09	N24	L24					

1. TVL = DL + Fv + ($0.2S_{DS}$/1.4 x Wp). All Terms Are Working Loads. Based On Eccentric Loading, 65% Of Total Load Allocated Per Rod.
2. Reductions In Actual Installed Brace Spacing Will Result In An Equal Percentage Reduction In Brace Reaction. As An Option When This Occurs ISAT May Substitute An Alternate Anchorage From Tables D1 or D2 Which Meets or Exceeds The Lowered Brace Reaction.
3. At Max. 30 Degree Brace Inclination.
4. Min. 3,000 psi NWC. Any "N Series" Connection May Be Utilized Having A Numeric Designation Equal To Or Higher Than That Shown.
5. Min. 3,000 psi NWC or LWC. Any "L Series" Connection May Be Utilized Having A Numeric Designation Equal To Or Higher Than That Shown.
6. As An Alternate, Brace Anchorage Connections To Structure May Be Employed Using Any Detail From Structural Connections Section "D" Series Details Where Assembly Design Value Meets Or Exceeds Brace Reaction.
7. For Trade Specific Bracing Installation Notes, Refer To Page 8.1 or 10.1.
8. Utilize Any "G" Series Vertical Support Connection Having A Design Value Equal To Or Greater Than The Corresponding "Rod Total Vertical Load".

APPROVED FOR CODE COMPLIANCE
OPM-0403
BY: William Staehlin
DATE: 01-26-2024
CALIFORNIA BUILDING CODE 2022

REGISTERED PROFESSIONAL ENGINEER MARCIN WASAZNIK S-6612 STRUCTURAL STATE OF CALIFORNIA

ISAT
A Division of Tomarco Contractor Specialties
International Seismic Application Technology
14848 Northam Street, La Mirada, CA 90638
877-999-4728 (Toll Free) 714-523-0845 (Fax)
www.isatsb.com

Rev. 0
08/03/18
Page
C15-0.5-30

RIGID BRACING REQUIREMENTS [7]

TRAPEZE MOUNTED PIPING (Plumbing, Mechanical, Process, Medical Gas) — **MAXIMUM SEISMIC DESIGN FORCE = 0.50 G's**

Requires Use of ISAT Seismic Brackets. Use of Any Non-ISAT Bracket Voids Engineering. — *2013 California Building Code Compliant*

Maximum Trapeze Load (lbs/lf)	Max. Vertical Support Spacing (ft.)	Rod [1] Total Vertical Load (lbs)	Min. [8] Vertical Support Rod Dia. (in.)	TRANSVERSE BRACING REQUIREMENTS					LONGITUDINAL BRACING REQUIREMENTS				
				Max. [2] Brace Spacing (ft.)	Brace [3] Reaction P (lbs)	Min. Brace Assembly E - Pages	Min. Brace Anchorage [6] Form Pour [4] Deck Page D1	Min. Brace Anchorage [6] Metal [5] Deck Page D2	Max. [2] Brace Spacing (ft.)	Brace [3] Reaction P (lbs)	Min. Brace Assembly E - Pages	Min. Brace Anchorage [6] Form Pour [4] Deck Page D1	Min. Brace Anchorage [6] Metal [5] Deck Page D2
				1-Way Transverse Brace Pattern (B11.0)					3-Way Transverse, Longitudinal Brace Pattern (B11.2)				
11.0	10	446	3/8	40	311	R38AAEM409	N4	L4	80	404	R38AAEM406	N5	L5
25.0	10	1,014	1/2	40	707	R12AAEM509	N8	L8	80	919	R12AAEM506	N10	L10
35.0	10	1,420	5/8	40	990	R58AAEM506	N10	L10	80	1,287	R58AAEM506	N13	L13
50.0	10	2,029	3/4	40	1,414	R34CFB1S06	N15	L15	80	1,838	R34DGB2P09	N19	L19
				TRANSVERSE, LONGITUDINAL BRACING REQUIREMENTS									
				4-Way Transverse, Longitudinal Brace Pattern (B11.3)									
50.0	10	1,209	1/2	40	919	R12AAEM506	N10	L10					
65.0	10	1,571	5/8	40	1,195	R58AAEM506	N12	L12					
75.0	10	1,813	5/8	40	1,379	R58AAEM506	N14	L14					
100.0	10	2,418	3/4	40	1,838	R34DGB2P09	N19	L19					
125.0	10	2,612	3/4	32	1,838	R34DGB2P09	N19	L19					
150.0	10	2,827	3/4	27	1,861	R34DGB2P09	N19	L19					
175.0	10	2,939	3/4	22	1,770	R34DGB2P09	N18	L18					
200.0	10	2,949	3/4	17	1,563	R34CFB2P12	N16	L16					
225.0	10	3,041	3/4	14	1,448	R34CFB2P12	N15	L15					

1. TVL = DL + Fv + ($0.2S_{DS}$/1.4 x Wp). All Terms Are Working Loads. Based On Eccentric Loading, 65% Of Total Load Allocated Per Rod.
2. Reductions In Actual Installed Brace Spacing Will Result In An Equal Percentage Reduction In Brace Reaction. As An Option When This Occurs ISAT May Substitute An Alternate Anchorage From Tables D1 or D2 Which Meets or Exceeds The Lowered Brace Reaction.
3. At Max. 45 Degree Brace Inclination.
4. Min. 3,000 psi NWC. Any "N Series" Connection May Be Utilized Having A Numeric Designation Equal To Or Higher Than That Shown.
5. Min. 3,000 psi NWC or LWC. Any "L Series" Connection May Be Utilized Having A Numeric Designation Equal To Or Higher Than That Shown.
6. As An Alternate, Brace Anchorage Connections To Structure May Be Employed Using Any Detail From Structural Connections Section "D" Series Details Where Assembly Design Value Meets Or Exceeds Brace Reaction.
7. For Trade Specific Bracing Installation Notes, Refer To Page 8.1 or 10.1.
8. Utilize Any "G" Series Vertical Support Connection Having A Design Value Equal To Or Greater Than The Corresponding "Rod Total Vertical Load".

OPM-0403 Reviewed for Code Compliance by William Staehlin DATE: 01-26-2024 CALIFORNIA BUILDING CODE

REGISTERED PROFESSIONAL ENGINEER MARCIN WASAZNIK S-6612 STRUCTURAL STATE OF CALIFORNIA

ISAT
A Division of Tomarco Contractor Specialties
International Seismic Application Technology
14848 Northam Street, La Mirada, CA 90638
877-999-4728 (Toll Free) 714-523-0845 (Fax)
www.isatsb.com

Rev. 0
08/03/18
Page
C15-0.5-45

RIGID BRACING REQUIREMENTS [7]

TRAPEZE MOUNTED PIPING (Plumbing, Mechanical, Process, Medical Gas) — **MAXIMUM SEISMIC DESIGN FORCE = 0.50 G's**

Requires Use of ISAT Seismic Brackets. Use of Any Non-ISAT Bracket Voids Engineering. — *2013 California Building Code Compliant*

Maximum Trapeze Load (lbs/lf)	Max. Vertical Support Spacing (ft.)	Rod [1] Total Vertical Load (lbs)	Min. [8] Vertical Support Rod Dia. (in.)	TRANSVERSE BRACING REQUIREMENTS: Max. [2] Brace Spacing (ft.)	Brace [3] Reaction P (lbs)	Min. Brace Assembly E - Pages	Min. Brace Anchorage [6]: Form Pour [4] Deck Page D1	Metal [5] Deck Page D2	LONGITUDINAL BRACING REQUIREMENTS: Max. [2] Brace Spacing (ft.)	Brace [3] Reaction P (lbs)	Min. Brace Assembly E - Pages	Min. Brace Anchorage [6]: Form Pour [4] Deck Page D1	Metal [5] Deck Page D2
				1-Way Transverse Brace Pattern (B11.0)					3-Way Transverse, Longitudinal Brace Pattern (B11.2)				
11.0	10	721	1/2	40	440	R12AAEM406	N5	L5	80	572	R12AAEM406	N6	L6
25.0	10	1,640	3/4	40	1,000	R34DGB1P06	N10	L10	80	1,300	R34DGB1S06	N13	L13
				TRANSVERSE, LONGITUDINAL BRACING REQUIREMENTS									
				4-Way Transverse, Longitudinal Brace Pattern (B11.3)									
35.0	10	1,301	1/2	40	910	R12AAEM506	N10	L10					
50.0	10	1,859	5/8	40	1,300	R58AAEM506	N13	L13					
65.0	10	2,048	3/4	32	1,352	R34DGB1S06	N14	L14					
75.0	10	2,150	3/4	28	1,365	R34DGB1S06	N14	L14					
100.0	10	2,369	3/4	21	1,365	R34DGB1S06	N14	L14					
125.0	10	2,606	3/4	17	1,381	R34DGB1S06	N14	L14					
150.0	10	2,808	3/4	14	1,365	R34DGB1S06	N14	L14					
175.0	10	3,027	3/4	12	1,365	R34DGB1S06	N14	L14					
200.0	10	3,175	3/4	10	1,300	R34DGB1S06	N13	L13					

1. TVL = DL + Fv + ($0.2S_{DS}$/1.4 x Wp). All Terms Are Working Loads. Based On Eccentric Loading, 65% Of Total Load Allocated Per Rod.
2. Reductions In Actual Installed Brace Spacing Will Result In An Equal Percentage Reduction In Brace Reaction. As An Option When This Occurs ISAT May Substitute An Alternate Anchorage From Tables D1 or D2 Which Meets or Exceeds The Lowered Brace Reaction.
3. At Max. 60 Degree Brace Inclination.
4. Min. 3,000 psi NWC. Any "N Series" Connection May Be Utilized Having A Numeric Designation Equal To Or Higher Than That Shown.
5. Min. 3,000 psi NWC or LWC. Any "L Series" Connection May Be Utilized Having A Numeric Designation Equal To Or Higher Than That Shown.
6. As An Alternate, Brace Anchorage Connections To Structure May Be Employed Using Any Detail From Structural Connections Section "D" Series Details Where Assembly Design Value Meets Or Exceeds Brace Reaction.
7. For Trade Specific Bracing Installation Notes, Refer To Page 8.1 or 10.1.
8. Utilize Any "G" Series Vertical Support Connection Having A Design Value Equal To Or Greater Than The Corresponding "Rod Total Vertical Load".

REVIEWED FOR CODE COMPLIANCE
HCAi
OPM-0403
BY: William Staehlin
DATE: 01-26-2024
CALIFORNIA BUILDING CODE, 2022

REGISTERED PROFESSIONAL ENGINEER MARCIN WASAZNIK S 6612 STRUCTURAL STATE OF CALIFORNIA

ISAT
A Division of Tomarco Contractor Specialties
International Seismic Application Technology
14848 Northam Street, La Mirada, CA 90638
877-999-4728 (Toll Free) 714-523-0845 (Fax)
www.isatsb.com

Rev. 0
08/03/18
Page
C15-0.5-60

RIGID BRACING REQUIREMENTS [7]

TRAPEZE MOUNTED PIPING (Plumbing, Mechanical, Process, Medical Gas) — **MAXIMUM SEISMIC DESIGN FORCE = 0.75 G's**

Requires Use of ISAT Seismic Brackets. Use of Any Non-ISAT Bracket Voids Engineering. — *2013 California Building Code Compliant*

Maximum Trapeze Load (lbs/lf)	Max. Vertical Support Spacing (ft.)	Rod [1] Total Vertical Load (lbs)	Min. [8] Vertical Support Rod Dia. (in.)	TRANSVERSE BRACING REQUIREMENTS: Max. [2] Brace Spacing (ft.)	Brace [3] Reaction P (lbs)	Min. Brace Assembly E - Pages	Min. Brace Anchorage [6]: Form Pour [4] Deck Page D1	Metal [5] Deck Page D2	LONGITUDINAL BRACING REQUIREMENTS: Max. [2] Brace Spacing (ft.)	Brace [3] Reaction P (lbs)	Min. Brace Assembly E - Pages	Min. Brace Anchorage [6]: Form Pour [4] Deck Page D1	Metal [5] Deck Page D2
				1-Way Transverse Brace Pattern (B11.0)					3-Way Transverse, Longitudinal Brace Pattern (B11.2)				
11.0	10	409	3/8	40	381	R38AAEM406	N4	L4	80	495	R38AAEM406	N5	L5
25.0	10	930	1/2	40	866	R12AAEM506	N9	L9	80	1,126	R12AAEM506	N12	L12
				TRANSVERSE, LONGITUDINAL BRACING REQUIREMENTS									
				4-Way Transverse, Longitudinal Brace Pattern (B11.3)									
35.0	10	804	1/2	40	788	R12AAEM509	N8	L8					
50.0	10	1,149	1/2	40	1,126	R12AAEM506	N12	L12					
65.0	10	1,494	5/8	40	1,464	R58AAEM606	N15	L15					
75.0	10	1,723	5/8	40	1,689	R58AAEM606	N17	L17					
100.0	10	2,298	5/8	40	2,252	R58DGB2P09	N23	L23					
125.0	10	2,650	3/4	35	2,463	R34DGB2P06	N25	L25					
150.0	10	2,861	3/4	29	2,449	R34DGB2P06	N25	L25					
175.0	10	3,089	3/4	25	2,463	R34DGB2P06	N25	L25					
200.0	10	3,317	3/4	22	2,477	R34DGB2P06	N25	L25					
225.0	10	3,492	3/4	19	2,406	R34DGB2P06	N25	L25					

1. TVL = DL + Fv + ($0.2S_{DS}$/1.4 x Wp). All Terms Are Working Loads. Based On Eccentric Loading, 65% Of Total Load Allocated Per Rod.
2. Reductions In Actual Installed Brace Spacing Will Result In An Equal Percentage Reduction In Brace Reaction. As An Option When This Occurs ISAT May Substitute An Alternate Anchorage From Tables D1 or D2 Which Meets or Exceeds The Lowered Brace Reaction.
3. At Max. 30 Degree Brace Inclination.
4. Min. 3,000 psi NWC. Any "N Series" Connection May Be Utilized Having A Numeric Designation Equal To Or Higher Than That Shown.
5. Min. 3,000 psi NWC or LWC. Any "L Series" Connection May Be Utilized Having A Numeric Designation Equal To Or Higher Than That Shown.
6. As An Alternate, Brace Anchorage Connections To Structure May Be Employed Using Any Detail From Structural Connections Section "D" Series Details Where Assembly Design Value Meets Or Exceeds Brace Reaction.
7. For Trade Specific Bracing Installation Notes, Refer To Page 8.1 or 10.1.
8. Utilize Any "G" Series Vertical Support Connection Having A Design Value Equal To Or Greater Than The Corresponding "Rod Total Vertical Load".

REVIEWED FOR CODE COMPLIANCE
HCAi
OPM-0403
BY: William Staehlin
DATE: 01-26-2024
CALIFORNIA BUILDING CODE 2022

REGISTERED PROFESSIONAL ENGINEER
MARCIN WASAZNIK
S 6612
STRUCTURAL
STATE OF CALIFORNIA

ISAT
A Division of Tomarco Contractor Specialties
International Seismic Application Technology
14848 Northam Street, La Mirada, CA 90638
877-999-4728 (Toll Free) 714-523-0845 (Fax)
www.isatsb.com

Rev. 0
08/03/18
Page
C15-0.75-30

RIGID BRACING REQUIREMENTS [7]

TRAPEZE MOUNTED PIPING (Plumbing, Mechanical, Process, Medical Gas) — **MAXIMUM SEISMIC DESIGN FORCE = 0.75 G's**

Requires Use of ISAT Seismic Brackets. Use of Any Non-ISAT Bracket Voids Engineering. — *2013 California Building Code Compliant*

Maximum Trapeze Load (lbs/lf)	Max. Vertical Support Spacing (ft.)	Rod [1] Total Vertical Load (lbs)	Min. [8] Vertical Support Rod Dia. (in.)	TRANSVERSE BRACING REQUIREMENTS: Max. [2] Brace Spacing (ft.)	Brace [3] Reaction P (lbs)	Min. Brace Assembly E - Pages	Min. Brace Anchorage [6]: Form Pour [4] Deck Page D1	Metal [5] Deck Page D2	LONGITUDINAL BRACING REQUIREMENTS: Max. [2] Brace Spacing (ft.)	Brace [3] Reaction P (lbs)	Min. Brace Assembly E - Pages	Min. Brace Anchorage [6]: Form Pour [4] Deck Page D1	Metal [5] Deck Page D2
				1-Way Transverse Brace Pattern (B11.0)					3-Way Transverse, Longitudinal Brace Pattern (B11.2)				
11.0	10	742	1/2	40	513	R12AAEM406	N6	L6	80	667	R12AAEM509	N7	L7
25.0	10	1,685	3/4	40	1,167	R34CFB1P06	N12	L12	80	1,517	R34CFB2P12	N16	L16
				TRANSVERSE, LONGITUDINAL BRACING REQUIREMENTS									
				4-Way Transverse, Longitudinal Brace Pattern (B11.3)									
35.0	10	1,333	5/8	40	1,062	R58AAEM506	N11	L11					
50.0	10	1,905	3/4	40	1,517	R34CFB2P12	N16	L16					
65.0	10	2,476	3/4	40	1,972	R34DGB2P09	N20	L20					
75.0	10	2,582	3/4	35	1,991	R34DGB2P09	N20	L20					
100.0	10	2,857	3/4	27	2,048	R34DGB2P09	N21	L21					
125.0	10	3,021	3/4	21	1,991	R34DGB2P09	N20	L20					
150.0	10	3,295	3/4	18	2,048	R34DGB2P09	N21	L21					
175.0	10	3,460	3/4	15	1,991	R34DGB2P09	N20	L20					
200.0	10	3,368	3/4	11	1,669	R34CFB2P09	N17	L17					

1. TVL = DL + Fv + ($0.2S_{DS}$/1.4 x Wp). All Terms Are Working Loads. Based On Eccentric Loading, 65% Of Total Load Allocated Per Rod.
2. Reductions In Actual Installed Brace Spacing Will Result In An Equal Percentage Reduction In Brace Reaction. As An Option When This Occurs ISAT May Substitute An Alternate Anchorage From Tables D1 or D2 Which Meets or Exceeds The Lowered Brace Reaction.
3. At Max. 50 Degree Brace Inclination.
4. Min. 3,000 psi NWC. Any "N Series" Connection May Be Utilized Having A Numeric Designation Equal To Or Higher Than That Shown.
5. Min. 3,000 psi NWC or LWC. Any "L Series" Connection May Be Utilized Having A Numeric Designation Equal To Or Higher Than That Shown.
6. As An Alternate, Brace Anchorage Connections To Structure May Be Employed Using Any Detail From Structural Connections Section "D" Series Details Where Assembly Design Value Meets Or Exceeds Brace Reaction.
7. For Trade Specific Bracing Installation Notes, Refer To Page 8.1 or 10.1.
8. Utilize Any "G" Series Vertical Support Connection Having A Design Value Equal To Or Greater Than The Corresponding "Rod Total Vertical Load".

REVIEWED FOR CODE COMPLIANCE
OPM-0403
BY: William Staehlin
DATE: 01-26-2024
CALIFORNIA BUILDING CODE, 2022

REGISTERED PROFESSIONAL ENGINEER MARCIN WASAZNIK S 6612 STRUCTURAL STATE OF CALIFORNIA

ISAT
A Division of Tomarco Contractor Specialties
International Seismic Application Technology
14848 Northam Street, La Mirada, CA 90638
877-999-4728 (Toll Free) 714-523-0845 (Fax)
www.isatsb.com

Rev. 0
08/03/18
Page
C15-0.75-45

RIGID BRACING REQUIREMENTS [7]

TRAPEZE MOUNTED PIPING (Plumbing, Mechanical, Process, Medical Gas) — **MAXIMUM SEISMIC DESIGN FORCE = 0.75 G's**

Requires Use of ISAT Seismic Brackets. Use of Any Non-ISAT Bracket Voids Engineering. — *2013 California Building Code Compliant*

Maximum Trapeze Load (lbs/lf)	Max. Vertical Support Spacing (ft.)	Rod [1] Total Vertical Load (lbs)	Min. [8] Vertical Support Rod Dia. (in.)	TRANSVERSE BRACING REQUIREMENTS					LONGITUDINAL BRACING REQUIREMENTS				
				Max. [2] Brace Spacing (ft.)	Brace [3] Reaction P (lbs)	Min. Brace Assembly E - Pages	Min. Brace Anchorage [6] Form Pour [4] Deck Page D1	Min. Brace Anchorage [6] Metal [5] Deck Page D2	Max. [2] Brace Spacing (ft.)	Brace [3] Reaction P (lbs)	Min. Brace Assembly E - Pages	Min. Brace Anchorage [6] Form Pour [4] Deck Page D1	Min. Brace Anchorage [6] Metal [5] Deck Page D2
				1-Way Transverse Brace Pattern (B11.0)					3-Way Transverse, Longitudinal Brace Pattern (B11.2)				
11.0	10	1,034	1/2	40	660	R12AAEM406	N7	L7	80	858	R12AAEM506	N9	L9
				TRANSVERSE, LONGITUDINAL BRACING REQUIREMENTS									
				4-Way Transverse, Longitudinal Brace Pattern (B11.3)									
25.0	10	1,285	5/8	40	975	R58AAEM506	N10	L10					
35.0	10	1,799	3/4	40	1,365	R34DGB1S06	N14	L14					
50.0	10	1,930	3/4	28	1,365	R34DGB1S06	N14	L14					
65.0	10	2,024	3/4	21	1,331	R34DGB1S06	N14	L14					
75.0	10	2,176	3/4	19	1,389	R34DGB1S06	N14	L14					
100.0	10	2,369	3/4	14	1,365	R34DGB1S06	N14	L14					
125.0	10	2,562	3/4	11	1,341	R34DGB1S06	N14	L14					

1. TVL = DL + Fv + ($0.2S_{DS}$/1.4 x Wp). All Terms Are Working Loads. Based On Eccentric Loading, 65% Of Total Load Allocated Per Rod.
2. Reductions In Actual Installed Brace Spacing Will Result In An Equal Percentage Reduction In Brace Reaction. As An Option When This Occurs ISAT May Substitute An Alternate Anchorage From Tables D1 or D2 Which Meets or Exceeds The Lowered Brace Reaction.
3. At Max. 60 Degree Brace Inclination.
4. Min. 3,000 psi NWC. Any "N Series" Connection May Be Utilized Having A Numeric Designation Equal To Or Higher Than That Shown.
5. Min. 3,000 psi NWC or LWC. Any "L Series" Connection May Be Utilized Having A Numeric Designation Equal To Or Higher Than That Shown.
6. As An Alternate, Brace Anchorage Connections To Structure May Be Employed Using Any Detail From Structural Connections Section "D" Series Details Where Assembly Design Value Meets Or Exceeds Brace Reaction.
7. For Trade Specific Bracing Installation Notes, Refer To Page 8.1 or 10.1.
8. Utilize Any "G" Series Vertical Support Connection Having A Design Value Equal To Or Greater Than The Corresponding "Rod Total Vertical Load".

REVIEWED FOR CODE COMPLIANCE
OPM-0403
BY: William Staehlin
DATE: 01-26-2024
CALIFORNIA BUILDING CODE, 2022

REGISTERED PROFESSIONAL ENGINEER
MARCIN WASAZNIK
S 6612
STRUCTURAL
STATE OF CALIFORNIA

ISAT
A Division of Tomarco Contractor Specialties

International Seismic Application Technology
14848 Northam Street, La Mirada, CA 90638
877-999-4728 (Toll Free) 714-523-0845 (Fax)
www.isatsb.com

Rev. 0
08/03/18
Page
C15-0.75-60

RIGID BRACING REQUIREMENTS [7]

TRAPEZE MOUNTED PIPING (Plumbing, Mechanical, Process, Medical Gas) — **MAXIMUM SEISMIC DESIGN FORCE = 1.00 G's**

Requires Use of ISAT Seismic Brackets. Use of Any Non-ISAT Bracket Voids Engineering. — *2013 California Building Code Compliant*

Maximum Trapeze Load (lbs/lf)	Max. Vertical Support Spacing (ft.)	Rod [1] Total Vertical Load (lbs)	Min. [8] Vertical Support Rod Dia. (in.)	TRANSVERSE BRACING REQUIREMENTS					LONGITUDINAL BRACING REQUIREMENTS				
				Max. [2] Brace Spacing (ft.)	Brace [3] Reaction P (lbs)	Min. Brace Assembly E - Pages	Min. Brace Anchorage [6] Form Pour [4] Deck Page D1	Min. Brace Anchorage [6] Metal [5] Deck Page D2	Max. [2] Brace Spacing (ft.)	Brace [3] Reaction P (lbs)	Min. Brace Assembly E - Pages	Min. Brace Anchorage [6] Form Pour [4] Deck Page D1	Min. Brace Anchorage [6] Metal [5] Deck Page D2
				1-Way Transverse Brace Pattern (B11.0)					3-Way Transverse, Longitudinal Brace Pattern (B11.2)				
11.0	10	513	1/2	40	508	R12AAEM406	N6	L6	80	660	R12AAEM509	N7	L7
				TRANSVERSE, LONGITUDINAL BRACING REQUIREMENTS									
				4-Way Transverse, Longitudinal Brace Pattern (B11.3)									
25.0	10	693	1/2	40	751	R12AAEM509	N8	L8					
35.0	10	970	1/2	40	1,051	R12AAEM506	N11	L11					
50.0	10	1,386	1/2	40	1,501	R12AAEM606	N16	L16					
65.0	10	1,801	5/8	40	1,951	R58AAEM606	N20	L20					
75.0	10	2,079	5/8	40	2,252	R58DGB2P09	N23	L23					
100.0	10	2,440	3/4	33	2,477	R34DGB2P06	N25	L25					
125.0	10	2,636	3/4	26	2,439	R34DGB2P06	N25	L25					
150.0	10	2,879	3/4	22	2,477	R34DGB2P06	N25	L25					
175.0	10	3,110	3/4	19	2,496	R34DGB2P06	N25	L25					
200.0	10	3,270	3/4	16	2,402	R34DGB2P06	N25	L25					
225.0	10	3,466	3/4	14	2,364	R34DGB2P09	N24	L24					

1. TVL = DL + Fv + ($0.2S_{DS}$/1.4 x Wp). All Terms Are Working Loads. Based On Eccentric Loading, 65% Of Total Load Allocated Per Rod.
2. Reductions In Actual Installed Brace Spacing Will Result In An Equal Percentage Reduction In Brace Reaction. As An Option When This Occurs ISAT May Substitute An Alternate Anchorage From Tables D1 or D2 Which Meets or Exceeds The Lowered Brace Reaction.
3. At Max. 30 Degree Brace Inclination.
4. Min. 3,000 psi NWC. Any "N Series" Connection May Be Utilized Having A Numeric Designation Equal To Or Higher Than That Shown.
5. Min. 3,000 psi NWC or LWC. Any "L Series" Connection May Be Utilized Having A Numeric Designation Equal To Or Higher Than That Shown.
6. As An Alternate, Brace Anchorage Connections To Structure May Be Employed Using Any Detail From Structural Connections Section "D" Series Details Where Assembly Design Value Meets Or Exceeds Brace Reaction.
7. For Trade Specific Bracing Installation Notes, Refer To Page 8.1 or 10.1.
8. Utilize Any "G" Series Vertical Support Connection Having A Design Value Equal To Or Greater Than The Corresponding "Rod Total Vertical Load".

REVIEWED FOR CODE COMPLIANCE
OPM-0403
BY: William Staehlin
DATE: 01-26-2024
CALIFORNIA BUILDING CODE 2022

REGISTERED PROFESSIONAL ENGINEER MARCIN WASAZNIK S 6612 STRUCTURAL STATE OF CALIFORNIA

ISAT
A Division of Tomarco Contractor Specialties
International Seismic Application Technology
14848 Northam Street, La Mirada, CA 90638
877-999-4728 (Toll Free) 714-523-0845 (Fax)
www.isatsb.com

Rev. 0
08/03/18
Page
C15-1-30

RIGID BRACING REQUIREMENTS [7]

TRAPEZE MOUNTED PIPING (Plumbing, Mechanical, Process, Medical Gas) — **MAXIMUM SEISMIC DESIGN FORCE = 1.00 G's**

Requires Use of ISAT Seismic Brackets. Use of Any Non-ISAT Bracket Voids Engineering. — *2013 California Building Code Compliant*

Maximum Trapeze Load (lbs/lf)	Max. Vertical Support Spacing (ft.)	Rod [1] Total Vertical Load (lbs)	Min. [8] Vertical Support Rod Dia. (in.)	TRANSVERSE BRACING REQUIREMENTS					LONGITUDINAL BRACING REQUIREMENTS				
				Max. [2] Brace Spacing (ft.)	Brace [3] Reaction P (lbs)	Min. Brace Assembly E - Pages	Min. Brace Anchorage [6] Form Pour [4] Deck Page D1	Min. Brace Anchorage [6] Metal [5] Deck Page D2	Max. [2] Brace Spacing (ft.)	Brace [3] Reaction P (lbs)	Min. Brace Assembly E - Pages	Min. Brace Anchorage [6] Form Pour [4] Deck Page D1	Min. Brace Anchorage [6] Metal [5] Deck Page D2
				1-Way Transverse Brace Pattern (B11.0)					3-Way Transverse, Longitudinal Brace Pattern (B11.2)				
11.0	10	957	1/2	40	685	R12AAEM509	N7	L7	80	890	R12AAEM506	N9	L9
				TRANSVERSE, LONGITUDINAL BRACING REQUIREMENTS									
				4-Way Transverse, Longitudinal Brace Pattern (B11.3)									
25.0	10	1,197	1/2	40	1,011	R12AAEM506	N11	L11					
35.0	10	1,675	5/8	40	1,416	R58AAEM506	N15	L15					
50.0	10	2,345	3/4	39	1,972	R34DGB2P09	N20	L20					
65.0	10	2,476	3/4	30	1,972	R34DGB2P09	N20	L20					
75.0	10	2,564	3/4	26	1,972	R34DGB2P09	N20	L20					
100.0	10	2,832	3/4	20	2,022	R34DGB2P09	N21	L21					
125.0	10	3,051	3/4	16	2,022	R34DGB2P09	N21	L21					
150.0	10	3,222	3/4	13	1,972	R34DGB2P09	N20	L20					
175.0	10	3,417	3/4	11	1,947	R34DGB2P09	N20	L20					

1. TVL = DL + Fv + ($0.2S_{DS}$/1.4 x Wp). All Terms Are Working Loads. Based On Eccentric Loading, 65% Of Total Load Allocated Per Rod.
2. Reductions In Actual Installed Brace Spacing Will Result In An Equal Percentage Reduction In Brace Reaction. As An Option When This Occurs ISAT May Substitute An Alternate Anchorage From Tables D1 or D2 Which Meets or Exceeds The Lowered Brace Reaction.
3. At Max. 50 Degree Brace Inclination.
4. Min. 3,000 psi NWC. Any "N Series" Connection May Be Utilized Having A Numeric Designation Equal To Or Higher Than That Shown.
5. Min. 3,000 psi NWC or LWC. Any "L Series" Connection May Be Utilized Having A Numeric Designation Equal To Or Higher Than That Shown.
6. As An Alternate, Brace Anchorage Connections To Structure May Be Employed Using Any Detail From Structural Connections Section "D" Series Details Where Assembly Design Value Meets Or Exceeds Brace Reaction.
7. For Trade Specific Bracing Installation Notes, Refer To Page 8.1 or 10.1.
8. Utilize Any "G" Series Vertical Support Connection Having A Design Value Equal To Or Greater Than The Corresponding "Rod Total Vertical Load".

REVIEWED FOR CODE COMPLIANCE
OPM-0403
BY: William Staehlin
DATE: 01/26/2024
CALIFORNIA BUILDING CODE, 2019

REGISTERED PROFESSIONAL ENGINEER MARCIN WASAZNIK S-6612 STRUCTURAL STATE OF CALIFORNIA

ISAT
A Division of Tomarco Contractor Specialties
International Seismic Application Technology
14848 Northam Street, La Mirada, CA 90638
877-999-4728 (Toll Free) 714-523-0845 (Fax)
www.isatsb.com

Rev. 0
08/03/18
Page
C15-1-45

RIGID BRACING REQUIREMENTS [7]

TRAPEZE MOUNTED PIPING (Plumbing, Mechanical, Process, Medical Gas) — **MAXIMUM SEISMIC DESIGN FORCE = 1.00 G's**

Requires Use of ISAT Seismic Brackets. Use of Any Non-ISAT Bracket Voids Engineering. — *2013 California Building Code Compliant*

Maximum Trapeze Load (lbs/lf)	Max. Vertical Support Spacing (ft.)	Rod [1] Total Vertical Load (lbs)	Min. [8] Vertical Support Rod Dia. (in.)	TRANSVERSE BRACING REQUIREMENTS					LONGITUDINAL BRACING REQUIREMENTS				
				Max. [2] Brace Spacing (ft.)	Brace [3] Reaction P (lbs)	Min. Brace Assembly E - Pages	Min. Brace Anchorage [6] Form Pour [4] Deck Page D1	Min. Brace Anchorage [6] Metal [5] Deck Page D2	Max. [2] Brace Spacing (ft.)	Brace [3] Reaction P (lbs)	Min. Brace Assembly E - Pages	Min. Brace Anchorage [6] Form Pour [4] Deck Page D1	Min. Brace Anchorage [6] Metal [5] Deck Page D2
				1-Way Transverse Brace Pattern (B11.0)					3-Way Transverse, Longitudinal Brace Pattern (B11.2)				
11.0	10	1,346	5/8	40	880	R58AAEM506	N9	L9	80	1,144	R58AAEM506	N12	L12
				TRANSVERSE, LONGITUDINAL BRACING REQUIREMENTS									
				4-Way Transverse, Longitudinal Brace Pattern (B11.3)									
25.0	10	1,640	3/4	40	1,300	R34DGB1S06	N13	L13					
35.0	10	1,799	3/4	30	1,365	R34DGB1S06	N14	L14					
50.0	10	1,930	3/4	21	1,365	R34DGB1S06	N14	L14					
65.0	10	2,048	3/4	16	1,352	R34DGB1S06	N14	L14					
75.0	10	2,150	3/4	14	1,365	R34DGB1S06	N14	L14					
100.0	10	2,298	5/8	10	1,300	R58AAEM506	N13	L13					

1. TVL = DL + Fv + ($0.2S_{DS}$/1.4 x Wp). All Terms Are Working Loads. Based On Eccentric Loading, 65% Of Total Load Allocated Per Rod.
2. Reductions In Actual Installed Brace Spacing Will Result In An Equal Percentage Reduction In Brace Reaction. As An Option When This Occurs ISAT May Substitute An Alternate Anchorage From Tables D1 or D2 Which Meets or Exceeds The Lowered Brace Reaction.
3. At Max. 60 Degree Brace Inclination.
4. Min. 3,000 psi NWC. Any "N Series" Connection May Be Utilized Having A Numeric Designation Equal To Or Higher Than That Shown.
5. Min. 3,000 psi NWC or LWC. Any "L Series" Connection May Be Utilized Having A Numeric Designation Equal To Or Higher Than That Shown.
6. As An Alternate, Brace Anchorage Connections To Structure May Be Employed Using Any Detail From Structural Connections Section "D" Series Details Where Assembly Design Value Meets Or Exceeds Brace Reaction.
7. For Trade Specific Bracing Installation Notes, Refer To Page 8.1 or 10.1.
8. Utilize Any "G" Series Vertical Support Connection Having A Design Value Equal To Or Greater Than The Corresponding "Rod Total Vertical Load".

REVIEWED FOR CODE COMPLIANCE
OPM-0403
BY: William Staehlin
DATE: 01-26-2024
CALIFORNIA BUILDING CODE, 2022

REGISTERED PROFESSIONAL ENGINEER MARCIN WASAZNIK S-6612 STRUCTURAL STATE OF CALIFORNIA

ISAT
A Division of Tomarco Contractor Specialties
International Seismic Application Technology
14848 Northam Street, La Mirada, CA 90638
877-999-4728 (Toll Free) 714-523-0845 (Fax)
www.isatsb.com

Rev. 0
08/03/18
Page
C15-1-60

RIGID BRACING REQUIREMENTS [7]

TRAPEZE MOUNTED PIPING (Plumbing, Mechanical, Process, Medical Gas) — **MAXIMUM SEISMIC DESIGN FORCE = 0.25 G's**

Requires Use of ISAT Seismic Brackets. Use of Any Non-ISAT Bracket Voids Engineering. — *2013 California Building Code Compliant*

Maximum Trapeze Load (lbs/lf)	Max. Vertical Support Spacing (ft.)	Rod [1] Total Vertical Load (lbs)	Min. [8] Vertical Support Rod Dia. (in.)	TRANSVERSE BRACING REQUIREMENTS					LONGITUDINAL BRACING REQUIREMENTS				
				Max. [2] Brace Spacing (ft.)	Brace [3] Reaction P (lbs)	Min. Brace Assembly E - Pages	Min. Brace Anchorage [6] Form Pour [4] Deck Page D1	Min. Brace Anchorage [6] Metal [5] Deck Page D2	Max. [2] Brace Spacing (ft.)	Brace [3] Reaction P (lbs)	Min. Brace Assembly E - Pages	Min. Brace Anchorage [6] Form Pour [4] Deck Page D1	Min. Brace Anchorage [6] Metal [5] Deck Page D2
				1-Way Transverse Brace Pattern (B11.0)					3-Way Transverse, Longitudinal Brace Pattern (B11.2)				
11.0	10	201	3/8	40	64	R38AAEM306	N1	L1	80	83	R38AAEM306	N1	L1
25.0	10	456	1/2	40	144	R12AAEM306	N2	L2	80	188	R12AAEM306	N2	L2
35.0	10	639	1/2	40	202	R12AAEM306	N3	L3	80	263	R12AAEM306	N3	L3
50.0	10	912	1/2	40	289	R12AAEM306	N3	L3	80	375	R12AAEM406	N4	L4
65.0	10	1,186	1/2	40	375	R12AAEM406	N4	L4	80	488	R12AAEM406	N5	L5
75.0	10	1,368	1/2	40	433	R12AAEM406	N5	L5	80	563	R12AAEM406	N6	L6
100.0	10	1,824	5/8	40	577	R58AAEM406	N6	L6	80	751	R58AAEM509	N8	L8
125.0	10	2,281	5/8	40	722	R58AAEM509	N8	L8	80	938	R58AAEM506	N10	L10
150.0	10	2,737	3/4	40	866	R34DGB1P09	N9	L9	80	1,126	R34DGB1P06	N12	L12
175.0	10	3,027	3/4	36	909	R34DGB1P09	N10	L10	72	1,182	R34DGB1P06	N12	L12
200.0	10	3,175	3/4	30	866	R34DGB1P09	N9	L9	60	1,126	R34DGB1P06	N12	L12
225.0	10	3,466	3/4	28	909	R34DGB1P09	N10	L10	56	1,182	R34DGB1P06	N12	L12
				TRANSVERSE, LONGITUDINAL BRACING REQUIREMENTS									
				4-Way Transverse, Longitudinal Brace Pattern (B11.3)									
175.0	10	2,364	3/4	40	657	R34CFB1P12	N7	L7					
200.0	10	2,702	3/4	40	751	R34CFB1P09	N8	L8					
225.0	10	3,040	3/4	40	844	R34DGB1P09	N9	L9					

1. TVL = DL + Fv + ($0.2S_{DS}$/1.4 x Wp). All Terms Are Working Loads. Based On Eccentric Loading, 65% Of Total Load Allocated Per Rod.
2. Reductions In Actual Installed Brace Spacing Will Result In An Equal Percentage Reduction In Brace Reaction. As An Option When This Occurs ISAT May Substitute An Alternate Anchorage From Tables D1 or D2 Which Meets or Exceeds The Lowered Brace Reaction.
3. At Max. 30 Degree Brace Inclination.
4. Min. 3,000 psi NWC. Any "N Series" Connection May Be Utilized Having A Numeric Designation Equal To Or Higher Than That Shown.
5. Min. 3,000 psi NWC or LWC. Any "L Series" Connection May Be Utilized Having A Numeric Designation Equal To Or Higher Than That Shown.
6. As An Alternate, Brace Anchorage Connections To Structure May Be Employed Using Any Detail From Structural Connections Section "D" Series Details Where Assembly Design Value Meets Or Exceeds Brace Reaction.
7. For Trade Specific Bracing Installation Notes, Refer To Page 8.1 or 10.1.
8. Utilize Any "G" Series Vertical Support Connection Having A Design Value Equal To Or Greater Than The Corresponding "Rod Total Vertical Load".

REVIEWED FOR CODE COMPLIANCE BY: William Staehlin DATE: 01-26-2024 OPM-0403 CALIFORNIA BUILDING CODE 2022

REGISTERED PROFESSIONAL ENGINEER MARCIN WASAZNIK S-6612 STRUCTURAL STATE OF CALIFORNIA

ISAT
A Division of Tomarco Contractor Specialties
International Seismic Application Technology
14848 Northam Street, La Mirada, CA 90638
877-999-4728 (Toll Free) 714-523-0845 (Fax)
www.isatsb.com

Rev. 0
08/03/18
Page
C15-0.25-30
2- Tier

RIGID BRACING REQUIREMENTS [7]

TRAPEZE MOUNTED PIPING (Plumbing, Mechanical, Process, Medical Gas) — **MAXIMUM SEISMIC DESIGN FORCE = 0.25 G's**

Requires Use of ISAT Seismic Brackets. Use of Any Non-ISAT Bracket Voids Engineering. — *2013 California Building Code Compliant*

Maximum Trapeze Load (lbs/lf)	Max. Vertical Support Spacing (ft.)	Rod [1] Total Vertical Load (lbs)	Min. [8] Vertical Support Rod Dia. (in.)	TRANSVERSE BRACING REQUIREMENTS					LONGITUDINAL BRACING REQUIREMENTS				
				Max. [2] Brace Spacing (ft.)	Brace [3] Reaction P (lbs)	Min. Brace Assembly E - Pages	Min. Brace Anchorage [6] Form Pour [4] Deck Page D1	Min. Brace Anchorage [6] Metal [5] Deck Page D2	Max. [2] Brace Spacing (ft.)	Brace [3] Reaction P (lbs)	Min. Brace Assembly E - Pages	Min. Brace Anchorage [6] Form Pour [4] Deck Page D1	Min. Brace Anchorage [6] Metal [5] Deck Page D2
				1-Way Transverse Brace Pattern (B11.0)					3-Way Transverse, Longitudinal Brace Pattern (B11.2)				
11.0	10	312	3/8	40	86	R38AAEM306	N1	L1	80	111	R38AAEM306	N2	L2
25.0	10	708	1/2	40	194	R12AAEM306	N2	L2	80	253	R12AAEM306	N3	L3
35.0	10	991	1/2	40	272	R12AAEM306	N3	L3	80	354	R12AAEM406	N4	L4
50.0	10	1,416	1/2	40	389	R12AAEM406	N4	L4	80	506	R12AAEM406	N6	L6
65.0	10	1,841	5/8	40	506	R58AAEM406	N6	L6	80	657	R58AAEM406	N7	L7
75.0	10	2,124	3/4	40	583	R34CFB1P12	N6	L6	80	758	R34CFB1P09	N8	L8
100.0	10	2,832	3/4	40	778	R34CFB1P09	N8	L8	80	1,011	R34CFB1P06	N11	L11
125.0	10	3,051	3/4	32	778	R34CFB1P09	N8	L8	64	1,011	R34CFB1P06	N11	L11
150.0	10	3,295	3/4	27	788	R34CFB1P09	N8	L8	54	1,024	R34CFB1P06	N11	L11
175.0	10	3,417	3/4	22	749	R34CFB1P09	N8	L8	44	973	R34CFB1P06	N10	L10
200.0	10	3,416	3/4	17	661	R34CFB1P12	N7	L7	34	860	R34CFB1P09	N9	L9
225.0	10	3,404	3/4	13	569	R34CFB1P12	N6	L6	26	739	R34CFB1P09	N8	L8
				TRANSVERSE, LONGITUDINAL BRACING REQUIREMENTS									
				4-Way Transverse, Longitudinal Brace Pattern (B11.3)									
125.0	10	2,319	5/8	40	632	R58AAEM406	N7	L7					
150.0	10	2,782	3/4	40	758	R34CFB1P09	N8	L8					
175.0	10	3,246	3/4	40	885	R34CFB1P09	N9	L9					
200.0	10	3,465	3/4	35	885	R34CFB1P09	N9	L9					
225.0	10	3,459	3/4	27	768	R34CFB1P09	N8	L8					

1. TVL = DL + Fv + ($0.2S_{DS}$/1.4 x Wp). All Terms Are Working Loads. Based On Eccentric Loading, 65% Of Total Load Allocated Per Rod.
2. Reductions In Actual Installed Brace Spacing Will Result In An Equal Percentage Reduction In Brace Reaction. As An Option When This Occurs ISAT May Substitute An Alternate Anchorage From Tables D1 or D2 Which Meets or Exceeds The Lowered Brace Reaction.
3. At Max. 50 Degree Brace Inclination.
4. Min. 3,000 psi NWC. Any "N Series" Connection May Be Utilized Having A Numeric Designation Equal To Or Higher Than That Shown.
5. Min. 3,000 psi NWC or LWC. Any "L Series" Connection May Be Utilized Having A Numeric Designation Equal To Or Higher Than That Shown.
6. As An Alternate, Brace Anchorage Connections To Structure May Be Employed Using Any Detail From Structural Connections Section "D" Series Details Where Assembly Design Value Meets Or Exceeds Brace Reaction.
7. For Trade Specific Bracing Installation Notes, Refer To Page 8.1 or 10.1.
8. Utilize Any "G" Series Vertical Support Connection Having A Design Value Equal To Or Greater Than The Corresponding "Rod Total Vertical Load".

REVIEWED FOR CODE COMPLIANCE
OPM-0403
DATE 01-26-2024
CALIFORNIA BUILDING CODE, 2022

REGISTERED PROFESSIONAL ENGINEER MARCIN WASAZNIK S 6612 STRUCTURAL STATE OF CALIFORNIA

ISAT
A Division of Tomarco Contractor Specialties
International Seismic Application Technology
14848 Northam Street, La Mirada, CA 90638
877-999-4728 (Toll Free) 714-523-0845 (Fax)
www.isatsb.com

Rev. 0
10/19/18
Page
C15-0.25-45
2- Tier

RIGID BRACING REQUIREMENTS [7]

TRAPEZE MOUNTED PIPING (Plumbing, Mechanical, Process, Medical Gas) — **MAXIMUM SEISMIC DESIGN FORCE = 0.25 G's**

Requires Use of ISAT Seismic Brackets. Use of Any Non-ISAT Bracket Voids Engineering. — *2013 California Building Code Compliant*

Maximum Trapeze Load (lbs/lf)	Max. Vertical Support Spacing (ft.)	Rod [1] Total Vertical Load (lbs)	Min. [8] Vertical Support Rod Dia. (in.)	TRANSVERSE BRACING REQUIREMENTS					LONGITUDINAL BRACING REQUIREMENTS				
				Max. [2] Brace Spacing (ft.)	Brace [3] Reaction P (lbs)	Min. Brace Assembly E - Pages	Min. Brace Anchorage [6] Form Pour [4] Deck Page D1	Min. Brace Anchorage [6] Metal [5] Deck Page D2	Max. [2] Brace Spacing (ft.)	Brace [3] Reaction P (lbs)	Min. Brace Assembly E - Pages	Min. Brace Anchorage [6] Form Pour [4] Deck Page D1	Min. Brace Anchorage [6] Metal [5] Deck Page D2
				1-Way Transverse Brace Pattern (B11.0)					3-Way Transverse, Longitudinal Brace Pattern (B11.2)				
11.0	10	409	3/8	40	110	R38AAEM306	N2	L2	80	143	R38AAEM306	N2	L2
25.0	10	930	1/2	40	250	R12AAEM306	N3	L3	80	325	R12AAEM409	N4	L4
35.0	10	1,301	1/2	40	350	R12AAEM406	N4	L4	80	455	R12AAEM406	N5	L5
50.0	10	1,859	5/8	40	500	R58AAEM406	N5	L5	80	650	R58AAEM406	N7	L7
65.0	10	2,417	3/4	40	650	R34CFB1P12	N7	L7	80	845	R34CFB1P09	N9	L9
75.0	10	2,576	3/4	36	675	R34CFB1P12	N7	L7	72	878	R34DGB1P09	N9	L9
100.0	10	2,724	3/4	26	650	R34CFB1P12	N7	L7	52	845	R34CFB1P09	N9	L9
125.0	10	3,050	3/4	22	688	R34CFB1P09	N7	L7	44	894	R34DGB1P09	N9	L9
150.0	10	3,234	3/4	18	675	R34CFB1P12	N7	L7	36	878	R34DGB1P09	N9	L9
175.0	10	3,276	3/4	14	613	R34CFB1P12	N7	L7	28	796	R34CFB1P09	N8	L8
200.0	10	3,459	3/4	12	600	R34CFB1P12	N6	L6	24	780	R34CFB1P09	N8	L8
				TRANSVERSE, LONGITUDINAL BRACING REQUIREMENTS									
				4-Way Transverse, Longitudinal Brace Pattern (B11.3)									
75.0	10	1,723	5/8	40	488	R58AAEM406	N5	L5					
100.0	10	2,298	5/8	40	650	R58AAEM406	N7	L7					
125.0	10	2,872	3/4	40	813	R34CFB1P09	N9	L9					
150.0	10	3,340	3/4	38	926	R34DGB1P06	N10	L10					
175.0	10	3,462	3/4	31	882	R34DGB1P09	N9	L9					
200.0	10	3,459	3/4	24	780	R34CFB1P09	N8	L8					
225.0	10	3,492	3/4	19	695	R34CFB1P09	N7	L7					

1. TVL = DL + Fv + ($0.2S_{DS}$/1.4 x Wp). All Terms Are Working Loads. Based On Eccentric Loading, 65% Of Total Load Allocated Per Rod.
2. Reductions In Actual Installed Brace Spacing Will Result In An Equal Percentage Reduction In Brace Reaction. As An Option When This Occurs ISAT May Substitute An Alternate Anchorage From Tables D1 or D2 Which Meets or Exceeds The Lowered Brace Reaction.
3. At Max. 60 Degree Brace Inclination.
4. Min. 3,000 psi NWC. Any "N Series" Connection May Be Utilized Having A Numeric Designation Equal To Or Higher Than That Shown.
5. Min. 3,000 psi NWC or LWC. Any "L Series" Connection May Be Utilized Having A Numeric Designation Equal To Or Higher Than That Shown.
6. As An Alternate, Brace Anchorage Connections To Structure May Be Employed Using Any Detail From Structural Connections Section "D" Series Details Where Assembly Design Value Meets Or Exceeds Brace Reaction.
7. For Trade Specific Bracing Installation Notes, Refer To Page 8.1 or 10.1.
8. Utilize Any "G" Series Vertical Support Connection Having A Design Value Equal To Or Greater Than The Corresponding "Rod Total Vertical Load".

ISAT
A Division of Tomarco Contractor Specialties

International Seismic Application Technology
14848 Northam Street, La Mirada, CA 90638
877-999-4728 (Toll Free) 714-523-0845 (Fax)
www.isatsb.com

Rev. 0
10/19/18
Page
C15-0.25-60
2- Tier

REVIEWED FOR CODE COMPLIANCE BY William Staehlin OPM-0403 DATE 01-26-2024 CALIFORNIA BUILDING CODE 2022

RIGID BRACING REQUIREMENTS [7]

TRAPEZE MOUNTED PIPING (Plumbing, Mechanical, Process, Medical Gas) — **MAXIMUM SEISMIC DESIGN FORCE = 0.50 G's**

Requires Use of ISAT Seismic Brackets. Use of Any Non-ISAT Bracket Voids Engineering. — *2013 California Building Code Compliant*

Maximum Trapeze Load (lbs/lf)	Max. Vertical Support Spacing (ft.)	Rod [1] Total Vertical Load (lbs)	Min. [8] Vertical Support Rod Dia. (in.)	TRANSVERSE BRACING REQUIREMENTS					LONGITUDINAL BRACING REQUIREMENTS				
				Max. [2] Brace Spacing (ft.)	Brace [3] Reaction P (lbs)	Min. Brace Assembly E - Pages	Min. Brace Anchorage [6] Form Pour [4] Deck Page D1	Min. Brace Anchorage [6] Metal [5] Deck Page D2	Max. [2] Brace Spacing (ft.)	Brace [3] Reaction P (lbs)	Min. Brace Assembly E - Pages	Min. Brace Anchorage [6] Form Pour [4] Deck Page D1	Min. Brace Anchorage [6] Metal [5] Deck Page D2
				1-Way Transverse Brace Pattern (B11.0)					3-Way Transverse, Longitudinal Brace Pattern (B11.2)				
11.0	10	305	3/8	40	127	R38AAEM306	N2	L2	80	165	R38AAEM306	N2	L2
25.0	10	693	1/2	40	289	R12AAEM306	N3	L3	80	375	R12AAEM406	N4	L4
35.0	10	970	1/2	40	404	R12AAEM406	N5	L5	80	525	R12AAEM406	N6	L6
50.0	10	1,386	1/2	40	577	R12AAEM406	N6	L6	80	751	R12AAEM509	N8	L8
65.0	10	1,801	5/8	40	751	R58AAEM509	N8	L8	80	976	R58AAEM506	N10	L10
75.0	10	2,079	5/8	40	866	R58AAEM506	N9	L9	80	1,126	R58AAEM506	N12	L12
100.0	10	2,298	5/8	30	866	R58AAEM506	N9	L9	60	1,126	R58AAEM506	N12	L12
125.0	10	2,517	3/4	24	866	R34DGB1P09	N9	L9	48	1,126	R34DGB1P06	N12	L12
150.0	10	2,737	3/4	20	866	R34DGB1P09	N9	L9	40	1,126	R34DGB1P06	N12	L12
175.0	10	3,027	3/4	18	909	R34DGB1P09	N10	L10	36	1,182	R34DGB1P06	N12	L12
200.0	10	3,081	3/4	14	808	R34DGB1P09	N9	L9	28	1,051	R34DGB1P06	N11	L11
225.0	10	3,253	3/4	12	779	R34DGB1P09	N8	L8	24	1,013	R34DGB1P06	N11	L11
				TRANSVERSE, LONGITUDINAL BRACING REQUIREMENTS									
				4-Way Transverse, Longitudinal Brace Pattern (B11.3)									
100.0	10	1,824	5/8	40	751	R58AAEM509	N8	L8					
125.0	10	2,281	5/8	40	938	R58AAEM506	N10	L10					
150.0	10	2,737	3/4	40	1,126	R34DGB1P06	N12	L12					
175.0	10	3,027	3/4	36	1,182	R34DGB1P06	N12	L12					
200.0	10	3,175	3/4	30	1,126	R34DGB1P06	N12	L12					
225.0	10	3,466	3/4	28	1,182	R34DGB1P06	N12	L12					

1. TVL = DL + Fv + ($0.2S_{DS}$/1.4 x Wp). All Terms Are Working Loads. Based On Eccentric Loading, 65% Of Total Load Allocated Per Rod.
2. Reductions In Actual Installed Brace Spacing Will Result In An Equal Percentage Reduction In Brace Reaction. As An Option When This Occurs ISAT May Substitute An Alternate Anchorage From Tables D1 or D2 Which Meets or Exceeds The Lowered Brace Reaction.
3. At Max. 30 Degree Brace Inclination.
4. Min. 3,000 psi NWC. Any "N Series" Connection May Be Utilized Having A Numeric Designation Equal To Or Higher Than That Shown.
5. Min. 3,000 psi NWC or LWC. Any "L Series" Connection May Be Utilized Having A Numeric Designation Equal To Or Higher Than That Shown.
6. As An Alternate, Brace Anchorage Connections To Structure May Be Employed Using Any Detail From Structural Connections Section "D" Series Details Where Assembly Design Value Meets Or Exceeds Brace Reaction.
7. For Trade Specific Bracing Installation Notes, Refer To Page 8.1 or 10.1.
8. Utilize Any "G" Series Vertical Support Connection Having A Design Value Equal To Or Greater Than The Corresponding "Rod Total Vertical Load".

REGISTERED PROFESSIONAL ENGINEER MARCIN WASAZNIK S 6612 STRUCTURAL STATE OF CALIFORNIA

ISAT
A Division of Tomarco Contractor Specialties
International Seismic Application Technology
14848 Northam Street, La Mirada, CA 90638
877-999-4728 (Toll Free) 714-523-0845 (Fax)
www.isatsb.com

Rev. 0
08/03/18
Page
C15-0.5-30
2- Tier

REVIEWED FOR CODE COMPLIANCE BY ICAi OPM-0403 DATE 01-26-2024 CALIFORNIA BUILDING CODE 2022

RIGID BRACING REQUIREMENTS [7]

TRAPEZE MOUNTED PIPING (Plumbing, Mechanical, Process, Medical Gas) — **MAXIMUM SEISMIC DESIGN FORCE = 0.50 G's**

Requires Use of ISAT Seismic Brackets. Use of Any Non-ISAT Bracket Voids Engineering. — *2013 California Building Code Compliant*

Maximum Trapeze Load (lbs/lf)	Max. Vertical Support Spacing (ft.)	Rod [1] Total Vertical Load (lbs)	Min. [8] Vertical Support Rod Dia. (in.)	TRANSVERSE BRACING REQUIREMENTS: Max. [2] Brace Spacing (ft.)	Brace [3] Reaction P (lbs)	Min. Brace Assembly E - Pages	Min. Brace Anchorage [6]: Form Pour [4] Deck Page D1	Min. Brace Anchorage [6]: Metal [5] Deck Page D2	LONGITUDINAL BRACING REQUIREMENTS: Max. [2] Brace Spacing (ft.)	Brace [3] Reaction P (lbs)	Min. Brace Assembly E - Pages	Min. Brace Anchorage [6]: Form Pour [4] Deck Page D1	Min. Brace Anchorage [6]: Metal [5] Deck Page D2
				1-Way Transverse Brace Pattern (B11.0)					3-Way Transverse, Longitudinal Brace Pattern (B11.2)				
11.0	10	527	1/2	40	171	R12AAEM306	N2	L2	80	222	R12AAEM306	N3	L3
25.0	10	1,197	1/2	40	389	R12AAEM406	N4	L4	80	506	R12AAEM406	N6	L6
35.0	10	1,675	5/8	40	545	R58AAEM406	N6	L6	80	708	R58AAEM509	N8	L8
50.0	10	2,345	3/4	39	758	R34CFB1P09	N8	L8	78	986	R34CFB1P06	N10	L10
65.0	10	2,476	3/4	30	758	R34CFB1P09	N8	L8	60	986	R34CFB1P06	N10	L10
75.0	10	2,564	3/4	26	758	R34CFB1P09	N8	L8	52	986	R34CFB1P06	N10	L10
100.0	10	2,832	3/4	20	778	R34CFB1P09	N8	L8	40	1,011	R34CFB1P06	N11	L11
125.0	10	3,051	3/4	16	778	R34CFB1P09	N8	L8	32	1,011	R34CFB1P06	N11	L11
150.0	10	3,222	3/4	13	758	R34CFB1P09	N8	L8	26	986	R34CFB1P06	N10	L10
175.0	10	3,417	3/4	11	749	R34CFB1P09	N8	L8	22	973	R34CFB1P06	N10	L10
				TRANSVERSE, LONGITUDINAL BRACING REQUIREMENTS									
				4-Way Transverse, Longitudinal Brace Pattern (B11.3)									
50.0	10	1,416	1/2	40	506	R12AAEM406	N6	L6					
65.0	10	1,841	5/8	40	657	R58AAEM406	N7	L7					
75.0	10	2,124	3/4	40	758	R34CFB1P09	N8	L8					
100.0	10	2,832	3/4	40	1,011	R34CFB1P06	N11	L11					
125.0	10	3,051	3/4	32	1,011	R34CFB1P06	N11	L11					
150.0	10	3,295	3/4	27	1,024	R34CFB1P06	N11	L11					
175.0	10	3,417	3/4	22	973	R34CFB1P06	N10	L10					
200.0	10	3,416	3/4	17	860	R34CFB1P09	N9	L9					
225.0	10	3,404	3/4	13	739	R34CFB1P09	N8	L8					

1. TVL = DL + Fv + ($0.2S_{DS}$/1.4 x Wp). All Terms Are Working Loads. Based On Eccentric Loading, 65% Of Total Load Allocated Per Rod.
2. Reductions In Actual Installed Brace Spacing Will Result In An Equal Percentage Reduction In Brace Reaction. As An Option When This Occurs ISAT May Substitute An Alternate Anchorage From Tables D1 or D2 Which Meets or Exceeds The Lowered Brace Reaction.
3. At Max. 50 Degree Brace Inclination.
4. Min. 3,000 psi NWC. Any "N Series" Connection May Be Utilized Having A Numeric Designation Equal To Or Higher Than That Shown.
5. Min. 3,000 psi NWC or LWC. Any "L Series" Connection May Be Utilized Having A Numeric Designation Equal To Or Higher Than That Shown.
6. As An Alternate, Brace Anchorage Connections To Structure May Be Employed Using Any Detail From Structural Connections Section "D" Series Details Where Assembly Design Value Meets Or Exceeds Brace Reaction.
7. For Trade Specific Bracing Installation Notes, Refer To Page 8.1 or 10.1.
8. Utilize Any "G" Series Vertical Support Connection Having A Design Value Equal To Or Greater Than The Corresponding "Rod Total Vertical Load".

REVIEWED FOR CODE COMPLIANCE
OPM-0403
By: William Staehlin
DATE: 01-26-2024
CALIFORNIA BUILDING CODE 2022

REGISTERED PROFESSIONAL ENGINEER MARCIN WASAZNIK S 6612 STRUCTURAL STATE OF CALIFORNIA

ISAT
A Division of Tomarco Contractor Specialties
International Seismic Application Technology
14848 Northam Street, La Mirada, CA 90638
877-999-4728 (Toll Free) 714-523-0845 (Fax)
www.isatsb.com

Rev. 0
10/19/18
Page
C15-0.5-45
2- Tier

RIGID BRACING REQUIREMENTS [7]

TRAPEZE MOUNTED PIPING (Plumbing, Mechanical, Process, Medical Gas) — **MAXIMUM SEISMIC DESIGN FORCE = 0.50 G's**

Requires Use of ISAT Seismic Brackets. Use of Any Non-ISAT Bracket Voids Engineering. — *2013 California Building Code Compliant*

Maximum Trapeze Load (lbs/lf)	Max. Vertical Support Spacing (ft.)	Rod [1] Total Vertical Load (lbs)	Min. [8] Vertical Support Rod Dia. (in.)	TRANSVERSE BRACING REQUIREMENTS					LONGITUDINAL BRACING REQUIREMENTS				
				Max. [2] Brace Spacing (ft.)	Brace [3] Reaction P (lbs)	Min. Brace Assembly E - Pages	Min. Brace Anchorage [6] Form Pour [4] Deck Page D1	Min. Brace Anchorage [6] Metal [5] Deck Page D2	Max. [2] Brace Spacing (ft.)	Brace [3] Reaction P (lbs)	Min. Brace Assembly E - Pages	Min. Brace Anchorage [6] Form Pour [4] Deck Page D1	Min. Brace Anchorage [6] Metal [5] Deck Page D2
				1-Way Transverse Brace Pattern (B11.0)					3-Way Transverse, Longitudinal Brace Pattern (B11.2)				
11.0	10	721	1/2	40	220	R12AAEM306	N3	L3	80	286	R12AAEM306	N3	L3
25.0	10	1,640	3/4	40	500	R34CFA1P06	N5	L5	80	650	R34CFB1P12	N7	L7
35.0	10	2,196	3/4	38	665	R34CFB1P12	N7	L7	76	865	R34CFB1P09	N9	L9
50.0	10	2,285	3/4	26	650	R34CFB1P12	N7	L7	52	845	R34CFB1P09	N9	L9
65.0	10	2,417	3/4	20	650	R34CFB1P12	N7	L7	40	845	R34CFB1P09	N9	L9
75.0	10	2,576	3/4	18	675	R34CFB1P12	N7	L7	36	878	R34DGB1P09	N9	L9
100.0	10	2,582	3/4	12	600	R34CFB1P12	N6	L6	24	780	R34CFB1P09	N8	L8
125.0	10	2,872	3/4	10	625	R34CFB1P12	N7	L7	20	813	R34CFB1P09	N9	L9
				TRANSVERSE, LONGITUDINAL BRACING REQUIREMENTS									
				4-Way Transverse, Longitudinal Brace Pattern (B11.3)									
150.0	10	3,234	3/4	18	878	R34DGB1P09	N9	L9					
175.0	10	3,276	3/4	14	796	R34CFB1P09	N8	L8					
200.0	10	3,459	3/4	12	780	R34CFB1P09	N8	L8					

1. TVL = DL + Fv + ($0.2S_{DS}$/1.4 x Wp). All Terms Are Working Loads. Based On Eccentric Loading, 65% Of Total Load Allocated Per Rod.
2. Reductions In Actual Installed Brace Spacing Will Result In An Equal Percentage Reduction In Brace Reaction. As An Option When This Occurs ISAT May Substitute An Alternate Anchorage From Tables D1 or D2 Which Meets or Exceeds The Lowered Brace Reaction.
3. At Max. 60 Degree Brace Inclination.
4. Min. 3,000 psi NWC. Any "N Series" Connection May Be Utilized Having A Numeric Designation Equal To Or Higher Than That Shown.
5. Min. 3,000 psi NWC or LWC. Any "L Series" Connection May Be Utilized Having A Numeric Designation Equal To Or Higher Than That Shown.
6. As An Alternate, Brace Anchorage Connections To Structure May Be Employed Using Any Detail From Structural Connections Section "D" Series Details Where Assembly Design Value Meets Or Exceeds Brace Reaction.
7. For Trade Specific Bracing Installation Notes, Refer To Page 8.1 or 10.1.
8. Utilize Any "G" Series Vertical Support Connection Having A Design Value Equal To Or Greater Than The Corresponding "Rod Total Vertical Load".

REVIEWED FOR CODE COMPLIANCE BY William Staehlin DATE: 01-26-2024 CALIFORNIA BUILDING CODE

REGISTERED PROFESSIONAL ENGINEER MARCIN WASAZNIK S 6612 STRUCTURAL STATE OF CALIFORNIA

ISAT
A Division of Tomarco Contractor Specialties

International Seismic Application Technology
14848 Northam Street, La Mirada, CA 90638
877-999-4728 (Toll Free) 714-523-0845 (Fax)
www.isatsb.com

Rev. 0
10/19/18
Page
C15-0.5-60
2- Tier

RIGID BRACING REQUIREMENTS [7]

TRAPEZE MOUNTED PIPING (Plumbing, Mechanical, Process, Medical Gas) — **MAXIMUM SEISMIC DESIGN FORCE = 0.75 G's**

Requires Use of ISAT Seismic Brackets. Use of Any Non-ISAT Bracket Voids Engineering. — *2013 California Building Code Compliant*

Maximum Trapeze Load (lbs/lf)	Max. Vertical Support Spacing (ft.)	Rod [1] Total Vertical Load (lbs)	Min. [8] Vertical Support Rod Dia. (in.)	TRANSVERSE BRACING REQUIREMENTS					LONGITUDINAL BRACING REQUIREMENTS				
				Max. [2] Brace Spacing (ft.)	Brace [3] Reaction P (lbs)	Min. Brace Assembly E - Pages	Min. Brace Anchorage [6] Form Pour [4] Deck Page D1	Min. Brace Anchorage [6] Metal [5] Deck Page D2	Max. [2] Brace Spacing (ft.)	Brace [3] Reaction P (lbs)	Min. Brace Assembly E - Pages	Min. Brace Anchorage [6] Form Pour [4] Deck Page D1	Min. Brace Anchorage [6] Metal [5] Deck Page D2
				1-Way Transverse Brace Pattern (B11.0)					3-Way Transverse, Longitudinal Brace Pattern (B11.2)				
11.0	10	409	3/8	40	191	R38AAEM306	N2	L2	80	248	R38AAEM306	N3	L3
25.0	10	930	1/2	40	433	R12AAEM406	N5	L5	80	563	R12AAEM406	N6	L6
35.0	10	1,301	1/2	40	606	R12AAEM406	N7	L7	80	788	R12AAEM509	N8	L8
50.0	10	1,859	5/8	40	866	R58AAEM506	N9	L9	80	1,126	R58AAEM506	N12	L12
65.0	10	2,048	3/4	32	901	R34DGB1P09	N10	L10	64	1,171	R34DGB1P06	N12	L12
75.0	10	2,150	3/4	28	909	R34DGB1P09	N10	L10	56	1,182	R34DGB1P06	N12	L12
100.0	10	2,298	5/8	20	866	R58AAEM506	N9	L9	40	1,126	R58AAEM506	N12	L12
125.0	10	2,517	3/4	16	866	R34DGB1P09	N9	L9	32	1,126	R34DGB1P06	N12	L12
150.0	10	2,808	3/4	14	909	R34DGB1P09	N10	L10	28	1,182	R34DGB1P06	N12	L12
175.0	10	3,027	3/4	12	909	R34DGB1P09	N10	L10	24	1,182	R34DGB1P06	N12	L12
200.0	10	3,175	3/4	10	866	R34DGB1P09	N9	L9	20	1,126	R34DGB1P06	N12	L12
				TRANSVERSE, LONGITUDINAL BRACING REQUIREMENTS									
				4-Way Transverse, Longitudinal Brace Pattern (B11.3)									
225.0	10	3,413	3/4	18	1,140	R34DGB1P06	N12	L12					

1. TVL = DL + Fv + ($0.2S_{DS}$/1.4 x Wp). All Terms Are Working Loads. Based On Eccentric Loading, 65% Of Total Load Allocated Per Rod.
2. Reductions In Actual Installed Brace Spacing Will Result In An Equal Percentage Reduction In Brace Reaction. As An Option When This Occurs ISAT May Substitute An Alternate Anchorage From Tables D1 or D2 Which Meets or Exceeds The Lowered Brace Reaction.
3. At Max. 30 Degree Brace Inclination.
4. Min. 3,000 psi NWC. Any "N Series" Connection May Be Utilized Having A Numeric Designation Equal To Or Higher Than That Shown.
5. Min. 3,000 psi NWC or LWC. Any "L Series" Connection May Be Utilized Having A Numeric Designation Equal To Or Higher Than That Shown.
6. As An Alternate, Brace Anchorage Connections To Structure May Be Employed Using Any Detail From Structural Connections Section "D" Series Details Where Assembly Design Value Meets Or Exceeds Brace Reaction.
7. For Trade Specific Bracing Installation Notes, Refer To Page 8.1 or 10.1.
8. Utilize Any "G" Series Vertical Support Connection Having A Design Value Equal To Or Greater Than The Corresponding "Rod Total Vertical Load".

REVIEWED FOR CODE COMPLIANCE
OPM-0403
DATE: 01-26-2024
CALIFORNIA BUILDING CODE 2019

REGISTERED PROFESSIONAL ENGINEER MARCIN WASAZNIK S 6612 STRUCTURAL STATE OF CALIFORNIA

ISAT
A Division of Tomarco Contractor Specialties
International Seismic Application Technology
14848 Northam Street, La Mirada, CA 90638
877-999-4728 (Toll Free) 714-523-0845 (Fax)
www.isatsb.com

Rev. 0
08/03/18
Page
C15-0.75-30
2- Tier

RIGID BRACING REQUIREMENTS [7]

TRAPEZE MOUNTED PIPING (Plumbing, Mechanical, Process, Medical Gas) — **MAXIMUM SEISMIC DESIGN FORCE = 0.75 G's**

Requires Use of ISAT Seismic Brackets. Use of Any Non-ISAT Bracket Voids Engineering. — *2013 California Building Code Compliant*

Maximum Trapeze Load (lbs/lf)	Max. Vertical Support Spacing (ft.)	Rod [1] Total Vertical Load (lbs)	Min. [8] Vertical Support Rod Dia. (in.)	TRANSVERSE BRACING REQUIREMENTS: Max. [2] Brace Spacing (ft.)	Brace [3] Reaction P (lbs)	Min. Brace Assembly E - Pages	Min. Brace Anchorage [6]: Form Pour [4] Deck Page D1	Min. Brace Anchorage [6]: Metal [5] Deck Page D2	LONGITUDINAL BRACING REQUIREMENTS: Max. [2] Brace Spacing (ft.)	Brace [3] Reaction P (lbs)	Min. Brace Assembly E - Pages	Min. Brace Anchorage [6]: Form Pour [4] Deck Page D1	Min. Brace Anchorage [6]: Metal [5] Deck Page D2
				1-Way Transverse Brace Pattern (B11.0)					3-Way Transverse, Longitudinal Brace Pattern (B11.2)				
11.0	10	742	1/2	40	257	R12AAEM306	N3	L3	80	334	R12AAEM406	N4	L4
25.0	10	1,685	3/4	40	583	R34CFB1P12	N6	L6	80	758	R34CFB1P09	N8	L8
35.0	10	2,206	3/4	37	755	R34CFB1P09	N8	L8	74	982	R34CFB1P06	N10	L10
50.0	10	2,345	3/4	26	758	R34CFB1P09	N8	L8	52	986	R34CFB1P06	N10	L10
65.0	10	2,476	3/4	20	758	R34CFB1P09	N8	L8	40	986	R34CFB1P06	N10	L10
75.0	10	2,527	3/4	17	744	R34CFB1P09	N8	L8	34	967	R34CFB1P06	N10	L10
100.0	10	2,783	3/4	13	758	R34CFB1P09	N8	L8	26	986	R34CFB1P06	N10	L10
125.0	10	2,929	3/4	10	729	R34CFB1P09	N8	L8	20	948	R34CFB1P06	N10	L10
				TRANSVERSE, LONGITUDINAL BRACING REQUIREMENTS									
				4-Way Transverse, Longitudinal Brace Pattern (B11.3)									
150.0	10	3,295	3/4	18	1,024	R34CFB1P06	N11	L11					
175.0	10	3,460	3/4	15	995	R34CFB1P06	N10	L10					
200.0	10	3,368	3/4	11	834	R34CFB1P09	N9	L9					

1. TVL = DL + Fv + ($0.2S_{DS}$/1.4 x Wp). All Terms Are Working Loads. Based On Eccentric Loading, 65% Of Total Load Allocated Per Rod.
2. Reductions In Actual Installed Brace Spacing Will Result In An Equal Percentage Reduction In Brace Reaction. As An Option When This Occurs ISAT May Substitute An Alternate Anchorage From Tables D1 or D2 Which Meets or Exceeds The Lowered Brace Reaction.
3. At Max. 50 Degree Brace Inclination.
4. Min. 3,000 psi NWC. Any "N Series" Connection May Be Utilized Having A Numeric Designation Equal To Or Higher Than That Shown.
5. Min. 3,000 psi NWC or LWC. Any "L Series" Connection May Be Utilized Having A Numeric Designation Equal To Or Higher Than That Shown.
6. As An Alternate, Brace Anchorage Connections To Structure May Be Employed Using Any Detail From Structural Connections Section "D" Series Details Where Assembly Design Value Meets Or Exceeds Brace Reaction.
7. For Trade Specific Bracing Installation Notes, Refer To Page 8.1 or 10.1.
8. Utilize Any "G" Series Vertical Support Connection Having A Design Value Equal To Or Greater Than The Corresponding "Rod Total Vertical Load".

REVIEWED FOR CODE COMPLIANCE BY William Staehlin DATE: 01-26-2024 CALIFORNIA BUILDING CODE

REGISTERED PROFESSIONAL ENGINEER MARCIN WASAZNIK S 6612 STRUCTURAL STATE OF CALIFORNIA

ISAT
A Division of Tomarco Contractor Specialties

International Seismic Application Technology
14848 Northam Street, La Mirada, CA 90638
877-999-4728 (Toll Free) 714-523-0845 (Fax)
www.isatsb.com

Rev. 0
10/19/18
Page
C15-0.75-45
2- Tier

RIGID BRACING REQUIREMENTS [7]

TRAPEZE MOUNTED PIPING (Plumbing, Mechanical, Process, Medical Gas) — **MAXIMUM SEISMIC DESIGN FORCE = 0.75 G's**

Requires Use of ISAT Seismic Brackets. Use of Any Non-ISAT Bracket Voids Engineering. 2013 California Building Code Compliant

Maximum Trapeze Load (lbs/lf)	Max. Vertical Support Spacing (ft.)	Rod [1] Total Vertical Load (lbs)	Min. [8] Vertical Support Rod Dia. (in.)	TRANSVERSE BRACING REQUIREMENTS					LONGITUDINAL BRACING REQUIREMENTS				
				Max. [2] Brace Spacing (ft.)	Brace [3] Reaction P (lbs)	Min. Brace Assembly E - Pages	Min. Brace Anchorage [6] Form Pour [4] Deck Page D1	Min. Brace Anchorage [6] Metal [5] Deck Page D2	Max. [2] Brace Spacing (ft.)	Brace [3] Reaction P (lbs)	Min. Brace Assembly E - Pages	Min. Brace Anchorage [6] Form Pour [4] Deck Page D1	Min. Brace Anchorage [6] Metal [5] Deck Page D2
				1-Way Transverse Brace Pattern (B11.0)					3-Way Transverse, Longitudinal Brace Pattern (B11.2)				
11.0	10	1,034	1/2	40	330	R12AAEM409	N4	L4	80	429	R12AAEM406	N5	L5
25.0	10	2,030	3/4	34	638	R34CFB1P12	N7	L7	68	829	R34CFB1P09	N9	L9
35.0	10	2,097	3/4	24	630	R34CFB1P12	N7	L7	48	819	R34CFB1P09	N9	L9
50.0	10	2,356	3/4	18	675	R34CFB1P12	N7	L7	36	878	R34DGB1P09	N9	L9
65.0	10	2,509	3/4	14	683	R34CFB1P09	N7	L7	28	887	R34DGB1P09	N9	L9
75.0	10	2,576	3/4	12	675	R34CFB1P12	N7	L7	24	878	R34DGB1P09	N9	L9
				TRANSVERSE, LONGITUDINAL BRACING REQUIREMENTS									
				4-Way Transverse, Longitudinal Brace Pattern (B11.3)									
100.0	10	2,795	3/4	18	878	R34DGB1P09	N9	L9					
125.0	10	2,961	3/4	14	853	R34CFB1P09	N9	L9					
150.0	10	3,234	3/4	12	878	R34DGB1P09	N9	L9					
175.0	10	3,400	3/4	10	853	R34CFB1P09	N9	L9					

1. TVL = DL + Fv + ($0.2S_{DS}$/1.4 x Wp). All Terms Are Working Loads. Based On Eccentric Loading, 65% Of Total Load Allocated Per Rod.
2. Reductions In Actual Installed Brace Spacing Will Result In An Equal Percentage Reduction In Brace Reaction. As An Option When This Occurs ISAT May Substitute An Alternate Anchorage From Tables D1 or D2 Which Meets or Exceeds The Lowered Brace Reaction.
3. At Max. 60 Degree Brace Inclination.
4. Min. 3,000 psi NWC. Any "N Series" Connection May Be Utilized Having A Numeric Designation Equal To Or Higher Than That Shown.
5. Min. 3,000 psi NWC or LWC. Any "L Series" Connection May Be Utilized Having A Numeric Designation Equal To Or Higher Than That Shown.
6. As An Alternate, Brace Anchorage Connections To Structure May Be Employed Using Any Detail From Structural Connections Section "D" Series Details Where Assembly Design Value Meets Or Exceeds Brace Reaction.
7. For Trade Specific Bracing Installation Notes, Refer To Page 8.1 or 10.1.
8. Utilize Any "G" Series Vertical Support Connection Having A Design Value Equal To Or Greater Than The Corresponding "Rod Total Vertical Load".

REVIEWED FOR CODE COMPLIANCE BY: William Staehlin DATE: 01-26-2024 CALIFORNIA BUILDING CODE 2022

REGISTERED PROFESSIONAL ENGINEER MARCIN WASAZNIK S-6612 STRUCTURAL STATE OF CALIFORNIA

ISAT
A Division of Tomarco Contractor Specialties

International Seismic Application Technology
14848 Northam Street, La Mirada, CA 90638
877-999-4728 (Toll Free) 714-523-0845 (Fax)
www.isatsb.com

Rev. 0
08/03/18
Page
C15-0.75-60
2- Tier

RIGID BRACING REQUIREMENTS [7]

TRAPEZE MOUNTED PIPING (Plumbing, Mechanical, Process, Medical Gas) — **MAXIMUM SEISMIC DESIGN FORCE = 1.00 G's**

Requires Use of ISAT Seismic Brackets. Use of Any Non-ISAT Bracket Voids Engineering. — *2013 California Building Code Compliant*

Maximum Trapeze Load (lbs/lf)	Max. Vertical Support Spacing (ft.)	Rod [1] Total Vertical Load (lbs)	Min. [8] Vertical Support Rod Dia. (in.)	TRANSVERSE BRACING REQUIREMENTS					LONGITUDINAL BRACING REQUIREMENTS				
				Max. [2] Brace Spacing (ft.)	Brace [3] Reaction P (lbs)	Min. Brace Assembly E - Pages	Min. Brace Anchorage [6] Form Pour [4] Deck Page D1	Min. Brace Anchorage [6] Metal [5] Deck Page D2	Max. [2] Brace Spacing (ft.)	Brace [3] Reaction P (lbs)	Min. Brace Assembly E - Pages	Min. Brace Anchorage [6] Form Pour [4] Deck Page D1	Min. Brace Anchorage [6] Metal [5] Deck Page D2
				1-Way Transverse Brace Pattern (B11.0)					3-Way Transverse, Longitudinal Brace Pattern (B11.2)				
11.0	10	513	1/2	40	254	R12AAEM306	N3	L3	80	330	R12AAEM406	N4	L4
25.0	10	1,166	1/2	40	577	R12AAEM406	N6	L6	80	751	R12AAEM509	N8	L8
35.0	10	1,633	5/8	40	808	R58AAEM506	N9	L9	80	1,051	R58AAEM506	N11	L11
50.0	10	1,859	5/8	30	866	R58AAEM506	N9	L9	60	1,126	R58AAEM506	N12	L12
65.0	10	2,048	3/4	24	901	R34DGB1P09	N10	L10	48	1,171	R34DGB1P06	N12	L12
75.0	10	2,079	5/8	20	866	R58AAEM506	N9	L9	40	1,126	R58AAEM506	N12	L12
100.0	10	2,203	5/8	14	808	R58AAEM506	N9	L9	28	1,051	R58AAEM506	N11	L11
125.0	10	2,517	3/4	12	866	R34DGB1P09	N9	L9	24	1,126	R34DGB1P06	N12	L12
150.0	10	2,737	3/4	10	866	R34DGB1P09	N9	L9	20	1,126	R34DGB1P06	N12	L12
175.0	10	3,193	3/4	10	1,010	R34DGB1P06	N11	L11	20	1,313	#N/A	N14	L14
				TRANSVERSE, LONGITUDINAL BRACING REQUIREMENTS									
				4-Way Transverse, Longitudinal Brace Pattern (B11.3)									
200.0	10	3,081	3/4	14	1,051	R34DGB1P06	N11	L11					
225.0	10	3,253	3/4	12	1,013	R34DGB1P06	N11	L11					

1. TVL = DL + Fv + ($0.2S_{DS}$/1.4 x Wp). All Terms Are Working Loads. Based On Eccentric Loading, 65% Of Total Load Allocated Per Rod.
2. Reductions In Actual Installed Brace Spacing Will Result In An Equal Percentage Reduction In Brace Reaction. As An Option When This Occurs ISAT May Substitute An Alternate Anchorage From Tables D1 or D2 Which Meets or Exceeds The Lowered Brace Reaction.
3. At Max. 30 Degree Brace Inclination.
4. Min. 3,000 psi NWC. Any "N Series" Connection May Be Utilized Having A Numeric Designation Equal To Or Higher Than That Shown.
5. Min. 3,000 psi NWC or LWC. Any "L Series" Connection May Be Utilized Having A Numeric Designation Equal To Or Higher Than That Shown.
6. As An Alternate, Brace Anchorage Connections To Structure May Be Employed Using Any Detail From Structural Connections Section "D" Series Details Where Assembly Design Value Meets Or Exceeds Brace Reaction.
7. For Trade Specific Bracing Installation Notes, Refer To Page 8.1 or 10.1.
8. Utilize Any "G" Series Vertical Support Connection Having A Design Value Equal To Or Greater Than The Corresponding "Rod Total Vertical Load".

REVIEWED FOR CODE COMPLIANCE
OPM-0403
By: William Staehlin
DATE: 01-26-2024
CALIFORNIA BUILDING CODE 2022

REGISTERED PROFESSIONAL ENGINEER
MARCIN WASAZNIK
S 6612
STRUCTURAL
STATE OF CALIFORNIA

ISAT
A Division of Tomarco Contractor Specialties

International Seismic Application Technology
14848 Northam Street, La Mirada, CA 90638
877-999-4728 (Toll Free) 714-523-0845 (Fax)
www.isatsb.com

Rev. 0
08/03/18
Page
C15-1-30
2- Tier

RIGID BRACING REQUIREMENTS [7]

TRAPEZE MOUNTED PIPING (Plumbing, Mechanical, Process, Medical Gas) — **MAXIMUM SEISMIC DESIGN FORCE = 1.00 G's**

Requires Use of ISAT Seismic Brackets. Use of Any Non-ISAT Bracket Voids Engineering. *2013 California Building Code Compliant*

Maximum Trapeze Load (lbs/lf)	Max. Vertical Support Spacing (ft.)	Rod [1] Total Vertical Load (lbs)	Min. [8] Vertical Support Rod Dia. (in.)	TRANSVERSE BRACING REQUIREMENTS: Max. [2] Brace Spacing (ft.)	Brace [3] Reaction P (lbs)	Min. Brace Assembly E - Pages	Min. Brace Anchorage [6]: Form Pour [4] Deck Page D1	Min. Brace Anchorage [6]: Metal [5] Deck Page D2	LONGITUDINAL BRACING REQUIREMENTS: Max. [2] Brace Spacing (ft.)	Brace [3] Reaction P (lbs)	Min. Brace Assembly E - Pages	Min. Brace Anchorage [6]: Form Pour [4] Deck Page D1	Min. Brace Anchorage [6]: Metal [5] Deck Page D2
				1-Way Transverse Brace Pattern (B11.0)					3-Way Transverse, Longitudinal Brace Pattern (B11.2)				
11.0	10	957	1/2	40	342	R12AAEM406	N4	L4	80	445	R12AAEM406	N5	L5
25.0	10	2,125	3/4	39	758	R34CFB1P09	N8	L8	78	986	R34CFB1P06	N10	L10
35.0	10	2,223	3/4	28	762	R34CFB1P09	N8	L8	56	991	R34CFB1P06	N10	L10
50.0	10	2,296	3/4	19	739	R34CFB1P09	N8	L8	38	961	R34CFB1P06	N10	L10
65.0	10	2,476	3/4	15	758	R34CFB1P09	N8	L8	30	986	R34CFB1P06	N10	L10
75.0	10	2,564	3/4	13	758	R34CFB1P09	N8	L8	26	986	R34CFB1P06	N10	L10
100.0	10	2,832	3/4	10	778	R34CFB1P09	N8	L8	20	1,011	R34CFB1P06	N11	L11
				TRANSVERSE, LONGITUDINAL BRACING REQUIREMENTS									
				4-Way Transverse, Longitudinal Brace Pattern (B11.3)									
125.0	10	3,051	3/4	16	1,011	R34CFB1P06	N11	L11					
150.0	10	3,222	3/4	13	986	R34CFB1P06	N10	L10					
175.0	10	3,417	3/4	11	973	R34CFB1P06	N10	L10					

1. TVL = DL + Fv + ($0.2S_{DS}$/1.4 x Wp). All Terms Are Working Loads. Based On Eccentric Loading, 65% Of Total Load Allocated Per Rod.
2. Reductions In Actual Installed Brace Spacing Will Result In An Equal Percentage Reduction In Brace Reaction. As An Option When This Occurs ISAT May Substitute An Alternate Anchorage From Tables D1 or D2 Which Meets or Exceeds The Lowered Brace Reaction.
3. At Max. 50 Degree Brace Inclination.
4. Min. 3,000 psi NWC. Any "N Series" Connection May Be Utilized Having A Numeric Designation Equal To Or Higher Than That Shown.
5. Min. 3,000 psi NWC or LWC. Any "L Series" Connection May Be Utilized Having A Numeric Designation Equal To Or Higher Than That Shown.
6. As An Alternate, Brace Anchorage Connections To Structure May Be Employed Using Any Detail From Structural Connections Section "D" Series Details Where Assembly Design Value Meets Or Exceeds Brace Reaction.
7. For Trade Specific Bracing Installation Notes, Refer To Page 8.1 or 10.1.
8. Utilize Any "G" Series Vertical Support Connection Having A Design Value Equal To Or Greater Than The Corresponding "Rod Total Vertical Load".

REVIEWED FOR CODE COMPLIANCE BY: William Staehlin DATE: 01-26-2024 CALIFORNIA BUILDING CODE 2022

REGISTERED PROFESSIONAL ENGINEER MARCIN WASAZNIK S-6612 STRUCTURAL STATE OF CALIFORNIA

ISAT
A Division of Tomarco Contractor Specialties
International Seismic Application Technology
14848 Northam Street, La Mirada, CA 90638
877-999-4728 (Toll Free) 714-523-0845 (Fax)
www.isatsb.com

Rev. 0
10/19/18
Page
C15-1-45
2- Tier

RIGID BRACING REQUIREMENTS [7]

TRAPEZE MOUNTED PIPING (Plumbing, Mechanical, Process, Medical Gas) — **MAXIMUM SEISMIC DESIGN FORCE = 1.00 G's**

Requires Use of ISAT Seismic Brackets. Use of Any Non-ISAT Bracket Voids Engineering. 2013 California Building Code Compliant

Maximum Trapeze Load (lbs/lf)	Max. Vertical Support Spacing (ft.)	Rod [1] Total Vertical Load (lbs)	Min. [8] Vertical Support Rod Dia. (in.)	TRANSVERSE BRACING REQUIREMENTS					LONGITUDINAL BRACING REQUIREMENTS				
				Max. [2] Brace Spacing (ft.)	Brace [3] Reaction P (lbs)	Min. Brace Assembly E - Pages	Min. Brace Anchorage [6] Form Pour [4] Deck Page D1	Min. Brace Anchorage [6] Metal [5] Deck Page D2	Max. [2] Brace Spacing (ft.)	Brace [3] Reaction P (lbs)	Min. Brace Assembly E - Pages	Min. Brace Anchorage [6] Form Pour [4] Deck Page D1	Min. Brace Anchorage [6] Metal [5] Deck Page D2
				1-Way Transverse Brace Pattern (B11.0)					3-Way Transverse, Longitudinal Brace Pattern (B11.2)				
11.0	10	1,346	5/8	40	440	R58AAEM406	N5	L5	80	572	R58AAEM406	N6	L6
25.0	10	2,066	3/4	26	650	R34CFB1P12	N7	L7	52	845	R34CFB1P09	N9	L9
35.0	10	2,097	3/4	18	630	R34CFB1P12	N7	L7	36	819	R34CFB1P09	N9	L9
50.0	10	2,143	3/4	12	600	R34CFB1P12	N6	L6	24	780	R34CFB1P09	N8	L8
65.0	10	2,417	3/4	10	650	R34CFB1P12	N7	L7	20	845	R34CFB1P09	N9	L9
				TRANSVERSE, LONGITUDINAL BRACING REQUIREMENTS									
				4-Way Transverse, Longitudinal Brace Pattern (B11.3)									
75.0	10	2,576	3/4	18	878	R34DGB1P09	N9	L9					
100.0	10	2,582	3/4	12	780	R34CFB1P09	N8	L8					
125.0	10	2,872	3/4	10	813	R34CFB1P09	N9	L9					

1. TVL = DL + Fv + ($0.2S_{DS}$/1.4 x Wp). All Terms Are Working Loads. Based On Eccentric Loading, 65% Of Total Load Allocated Per Rod.
2. Reductions In Actual Installed Brace Spacing Will Result In An Equal Percentage Reduction In Brace Reaction. As An Option When This Occurs ISAT May Substitute An Alternate Anchorage From Tables D1 or D2 Which Meets or Exceeds The Lowered Brace Reaction.
3. At Max. 60 Degree Brace Inclination.
4. Min. 3,000 psi NWC. Any "N Series" Connection May Be Utilized Having A Numeric Designation Equal To Or Higher Than That Shown.
5. Min. 3,000 psi NWC or LWC. Any "L Series" Connection May Be Utilized Having A Numeric Designation Equal To Or Higher Than That Shown.
6. As An Alternate, Brace Anchorage Connections To Structure May Be Employed Using Any Detail From Structural Connections Section "D" Series Details Where Assembly Design Value Meets Or Exceeds Brace Reaction.
7. For Trade Specific Bracing Installation Notes, Refer To Page 8.1 or 10.1.
8. Utilize Any "G" Series Vertical Support Connection Having A Design Value Equal To Or Greater Than The Corresponding "Rod Total Vertical Load".

REVIEWED FOR CODE COMPLIANCE
OPM-0403
BY: William Staehlin
DATE: 01-26-2024
CALIFORNIA BUILDING CODE, 2019

REGISTERED PROFESSIONAL ENGINEER MARCIN WASAZNIK S 6612 STRUCTURAL STATE OF CALIFORNIA

ISAT
A Division of Tomarco Contractor Specialties
International Seismic Application Technology
14848 Northam Street, La Mirada, CA 90638
877-999-4728 (Toll Free) 714-523-0845 (Fax)
www.isatsb.com

Rev. 0
08/03/18
Page
C15-1-60
2- Tier

CABLE BRACING REQUIREMENTS [7]:

TRAPEZE MOUNTED PIPING (Plumbing, Mechanical, Process, Medical Gas) — **MAXIMUM SEISMIC DESIGN FORCE = 0.25 G's**

Requires Use of ISAT Seismic Brackets. Use of Any Non-ISAT Bracket Voids Engineering. — *2013 California Building Code Compliant*

Maximum Trapeze Load (lbs/lf)	Max. Vertical Support Spacing (ft.)	Rod [1] Total Vertical Load (lbs)	Min. [8] Vertical Support Rod Dia. (in.)	TRANSVERSE BRACING REQUIREMENTS					LONGITUDINAL BRACING REQUIREMENTS				
				Max. [2] Brace Spacing (ft.)	Brace [3] Reaction P (lbs)	Min. Brace Assembly E - Pages	Min. Brace Anchorage [6] Form Pour [4] Deck Page D1	Min. Brace Anchorage [6] Metal [5] Deck Page D2	Max. [2] Brace Spacing (ft.)	Brace [3] Reaction P (lbs)	Min. Brace Assembly E - Pages	Min. Brace Anchorage [6] Form Pour [4] Deck Page D1	Min. Brace Anchorage [6] Metal [5] Deck Page D2
				2-Way Transverse Brace Pattern (B15.0)					6-Way Transverse, Longitudinal Brace Pattern (B15.1)				
11.0	10	97	3/8	40	127	C38AA04WS	N2	L2	80	165	C38AA04WS	N2	L2
25.0	10	219	1/2	40	289	C12AA04WS	N3	L3	80	375	C12AA04WS	N4	L4
35.0	10	307	1/2	40	404	C12AA04WS	N5	L5	80	525	C12AA04WS	N6	L6
50.0	10	439	1/2	40	577	C12AA04WS	N6	L6	80	751	C12AA06WS	N8	L8
65.0	10	570	1/2	40	751	C12AA06WS	N8	L8	80	976	C12AA06WS	N10	L10
75.0	10	658	1/2	40	866	C12AA06WS	N9	L9	80	1,126	C12AA06WS	N12	L12
100.0	10	878	1/2	38	1,097	C12AA06WS	N11	L11	76	1,426	C12AA06WS	N15	L15
125.0	10	1,097	1/2	30	1,083	C12AA06WS	N11	L11	60	1,407	C12AA06WS	N15	L15
150.0	10	1,316	1/2	25	1,083	C12AA06WS	N11	L11	50	1,407	C12AA06WS	N15	L15
175.0	10	1,536	5/8	21	1,061	C58AA06WS	N11	L11	42	1,379	C58AA06WS	N14	L14
200.0	10	1,755	5/8	19	1,097	C58AA06WS	N11	L11	38	1,426	C58AA06WS	N15	L15
225.0	10	1,974	5/8	17	1,104	C58AA06WS	N12	L12	34	1,435	C58AA06WS	N15	L15

1. TVL = DL + Fv + ($0.2S_{DS}$/1.4 x Wp). All Terms Are Working Loads. Based On Eccentric Loading, 65% Of Total Load Allocated Per Rod.
2. Reductions In Actual Installed Brace Spacing Will Result In An Equal Percentage Reduction In Brace Reaction. As An Option When This Occurs ISAT May Substitute An Alternate Anchorage From Tables D1 or D2 Which Meets or Exceeds The Lowered Brace Reaction.
3. At Max. 30 Degree Brace Inclination.
4. Min. 3,000 psi NWC. Any "N Series" Connection May Be Utilized Having A Numeric Designation Equal To Or Higher Than That Shown.
5. Min. 3,000 psi NWC or LWC. Any "L Series" Connection May Be Utilized Having A Numeric Designation Equal To Or Higher Than That Shown.
6. As An Alternate, Brace Anchorage Connections To Structure May Be Employed Using Any Detail From Structural Connections Section "D" Series Details Where Assembly Design Value Meets Or Exceeds Brace Reaction.
7. For Trade Specific Bracing Installation Notes, Refer To Page 8.1 or 10.1.
8. Utilize Any "G" Series Vertical Support Connection Having A Design Value Equal To Or Greater Than The Corresponding "Rod Total Vertical Load".

REVIEWED FOR CODE COMPLIANCE
OPM-0403
BY: William Staehlin
DATE: 01-26-2024
CALIFORNIA BUILDING CODES

REGISTERED PROFESSIONAL ENGINEER
MARCIN WASAZNIK
S 6612
STRUCTURAL
STATE OF CALIFORNIA

ISAT
A Division of Tomarco Contractor Specialties
International Seismic Application Technology
14848 Northam Street, La Mirada, CA 90638
877-999-4728 (Toll Free) 714-523-0845 (Fax)
www.isatsb.com

Rev. 0
08/03/18
Page
C16-0.25-30

CABLE BRACING REQUIREMENTS [7]:

TRAPEZE MOUNTED PIPING (Plumbing, Mechanical, Process, Medical Gas) — **MAXIMUM SEISMIC DESIGN FORCE = 0.25 G's**

Requires Use of ISAT Seismic Brackets. Use of Any Non-ISAT Bracket Voids Engineering. — *2013 California Building Code Compliant*

Maximum Trapeze Load (lbs/lf)	Max. Vertical Support Spacing (ft.)	Rod [1] Total Vertical Load (lbs)	Min. [8] Vertical Support Rod Dia. (in.)	TRANSVERSE BRACING REQUIREMENTS					LONGITUDINAL BRACING REQUIREMENTS				
				Max. [2] Brace Spacing (ft.)	Brace [3] Reaction P (lbs)	Min. Brace Assembly E - Pages	Min. Brace Anchorage [6] Form Pour [4] Deck Page D1	Min. Brace Anchorage [6] Metal [5] Deck Page D2	Max. [2] Brace Spacing (ft.)	Brace [3] Reaction P (lbs)	Min. Brace Assembly E - Pages	Min. Brace Anchorage [6] Form Pour [4] Deck Page D1	Min. Brace Anchorage [6] Metal [5] Deck Page D2
				2-Way Transverse Brace Pattern (B15.0)					6-Way Transverse, Longitudinal Brace Pattern (B15.1)				
11.0	10	97	3/8	40	171	C38AA04WS	N2	L2	80	222	C38AA04WS	N3	L3
25.0	10	219	1/2	40	389	C12AA04WS	N4	L4	80	506	C12AA04WS	N6	L6
35.0	10	307	1/2	40	545	C12AA04WS	N6	L6	80	708	C12AA06WS	N8	L8
50.0	10	439	1/2	40	778	C12AA06WS	N8	L8	80	1,011	C12AA06WS	N11	L11
65.0	10	570	5/8	40	1,011	C58AA06WS	N11	L11	80	1,315	C58AA06WS	N14	L14
75.0	10	658	3/4	40	1,167	C34DG06WS	N12	L12	80	1,517	C34DG06TS	N16	L16
100.0	10	878	5/8	30	1,167	C58AA06WS	N12	L12	60	1,517	C58DG06TS	N16	L16
125.0	10	1,097	5/8	24	1,167	C58AA06WS	N12	L12	48	1,517	C58DG06TS	N16	L16
150.0	10	1,316	5/8	20	1,167	C58AA06WS	N12	L12	40	1,517	C58DG06TS	N16	L16
175.0	10	1,536	5/8	16	1,089	C58AA06WS	N11	L11	32	1,416	C58AA06WS	N15	L15
200.0	10	1,755	5/8	14	1,089	C58AA06WS	N11	L11	28	1,416	C58AA06WS	N15	L15
225.0	10	1,974	5/8	14	1,225	C58AA06WS	N13	L13	28	1,593	C58DG06TS	N16	L16

1. TVL = DL + Fv + ($0.2S_{DS}$/1.4 x Wp). All Terms Are Working Loads. Based On Eccentric Loading, 65% Of Total Load Allocated Per Rod.
2. Reductions In Actual Installed Brace Spacing Will Result In An Equal Percentage Reduction In Brace Reaction. As An Option When This Occurs ISAT May Substitute An Alternate Anchorage From Tables D1 or D2 Which Meets or Exceeds The Lowered Brace Reaction.
3. At Max. 50 Degree Brace Inclination.
4. Min. 3,000 psi NWC. Any "N Series" Connection May Be Utilized Having A Numeric Designation Equal To Or Higher Than That Shown.
5. Min. 3,000 psi NWC or LWC. Any "L Series" Connection May Be Utilized Having A Numeric Designation Equal To Or Higher Than That Shown.
6. As An Alternate, Brace Anchorage Connections To Structure May Be Employed Using Any Detail From Structural Connections Section "D" Series Details Where Assembly Design Value Meets Or Exceeds Brace Reaction.
7. For Trade Specific Bracing Installation Notes, Refer To Page 8.1 or 10.1
8. Utilize Any "G" Series Vertical Support Connection Having A Design Value Equal To Or Greater Than The Corresponding "Rod Total Vertical Load".

REVIEWED FOR CODE COMPLIANCE
OPM-0403
BY: William Staehlin
DATE: 01-26-2024
CALIFORNIA BUILDING CODE

REGISTERED PROFESSIONAL ENGINEER
MARCIN WASAZNIK
S-6612
STRUCTURAL
STATE OF CALIFORNIA

ISAT
A Division of Tomarco Contractor Specialties
International Seismic Application Technology
14848 Northam Street, La Mirada, CA 90638
877-999-4728 (Toll Free) 714-523-0845 (Fax)
www.isatsb.com

Rev. 1
03/12/19
Page
C16-0.25-45

CABLE BRACING REQUIREMENTS [7]:

TRAPEZE MOUNTED PIPING (Plumbing, Mechanical, Process, Medical Gas) — **MAXIMUM SEISMIC DESIGN FORCE = 0.25 G's**

Requires Use of ISAT Seismic Brackets. Use of Any Non-ISAT Bracket Voids Engineering. — *2013 California Building Code Compliant*

Maximum Trapeze Load (lbs/lf)	Max. Vertical Support Spacing (ft.)	Rod [1] Total Vertical Load (lbs)	Min. [8] Vertical Support Rod Dia. (in.)	TRANSVERSE BRACING REQUIREMENTS					LONGITUDINAL BRACING REQUIREMENTS				
				Max. [2] Brace Spacing (ft.)	Brace [3] Reaction P (lbs)	Min. Brace Assembly E - Pages	Min. Brace Anchorage [6] Form Pour [4] Deck Page D1	Min. Brace Anchorage [6] Metal [5] Deck Page D2	Max. [2] Brace Spacing (ft.)	Brace [3] Reaction P (lbs)	Min. Brace Assembly E - Pages	Min. Brace Anchorage [6] Form Pour [4] Deck Page D1	Min. Brace Anchorage [6] Metal [5] Deck Page D2
				2-Way Transverse Brace Pattern (B15.0)					6-Way Transverse, Longitudinal Brace Pattern (B15.1)				
11.0	10	97	3/8	40	220	C38AA04WS	N3	L3	80	286	C38AA04WS	N3	L3
25.0	10	219	1/2	40	500	C12AA04WS	N5	L5	80	650	C12AA04WS	N7	L7
35.0	10	307	1/2	40	700	C12AA06WS	N7	L7	80	910	C12AA06WS	N10	L10
50.0	10	439	5/8	40	1,000	C58AA06WS	N10	L10	80	1,300	C58AA06WS	N13	L13
65.0	10	570	3/4	35	1,138	C34DG06WS	N12	L12	70	1,479	C34DG06WS	N15	L15
75.0	10	658	3/4	30	1,125	C34DG06WS	N12	L12	60	1,463	C34DG06WS	N15	L15
100.0	10	878	3/4	22	1,100	C34DG06WS	N11	L11	44	1,430	C34DG06WS	N15	L15
125.0	10	1,097	3/4	18	1,125	C34DG06WS	N12	L12	36	1,463	C34DG06WS	N15	L15
150.0	10	1,316	3/4	15	1,125	C34DG06WS	N12	L12	30	1,463	C34DG06WS	N15	L15
175.0	10	1,536	3/4	13	1,138	C34DG06WS	N12	L12	26	1,479	C34DG06WS	N15	L15
200.0	10	1,755	3/4	11	1,100	C34DG06WS	N11	L11	22	1,430	C34DG06WS	N15	L15
225.0	10	1,974	3/4	10	1,125	C34DG06WS	N12	L12	20	1,463	C34DG06WS	N15	L15

1. TVL = DL + Fv + ($0.2S_{DS}$/1.4 x Wp). All Terms Are Working Loads. Based On Eccentric Loading, 65% Of Total Load Allocated Per Rod.
2. Reductions In Actual Installed Brace Spacing Will Result In An Equal Percentage Reduction In Brace Reaction. As An Option When This Occurs ISAT May Substitute An Alternate Anchorage From Tables D1 or D2 Which Meets or Exceeds The Lowered Brace Reaction.
3. At Max. 60 Degree Brace Inclination.
4. Min. 3,000 psi NWC. Any "N Series" Connection May Be Utilized Having A Numeric Designation Equal To Or Higher Than That Shown.
5. Min. 3,000 psi NWC or LWC. Any "L Series" Connection May Be Utilized Having A Numeric Designation Equal To Or Higher Than That Shown.
6. As An Alternate, Brace Anchorage Connections To Structure May Be Employed Using Any Detail From Structural Connections Section "D" Series Details Where Assembly Design Value Meets Or Exceeds Brace Reaction.
7. For Trade Specific Bracing Installation Notes, Refer To Page 8.1 or 10.1.
8. Utilize Any "G" Series Vertical Support Connection Having A Design Value Equal To Or Greater Than The Corresponding "Rod Total Vertical Load".

REVIEWED FOR CODE COMPLIANCE
OPM-0403
BY: William Staehlin
DATE: 01-26-2024
CALIFORNIA BUILDING CODE

REGISTERED PROFESSIONAL ENGINEER
MARCIN WASAZNIK
S-6612
STRUCTURAL
STATE OF CALIFORNIA

ISAT
A Division of Tomarco Contractor Specialties
International Seismic Application Technology
14848 Northam Street, La Mirada, CA 90638
877-999-4728 (Toll Free) 714-523-0845 (Fax)
www.isatsb.com

Rev. 2
03/12/19
Page
C16-0.25-60

CABLE BRACING REQUIREMENTS [7]:

TRAPEZE MOUNTED PIPING (Plumbing, Mechanical, Process, Medical Gas) — **MAXIMUM SEISMIC DESIGN FORCE = 0.50 G's**

Requires Use of ISAT Seismic Brackets. Use of Any Non-ISAT Bracket Voids Engineering. — *2013 California Building Code Compliant*

Maximum Trapeze Load (lbs/lf)	Max. Vertical Support Spacing (ft.)	Rod [1] Total Vertical Load (lbs)	Min. [8] Vertical Support Rod Dia. (in.)	TRANSVERSE BRACING REQUIREMENTS					LONGITUDINAL BRACING REQUIREMENTS				
				Max. [2] Brace Spacing (ft.)	Brace [3] Reaction P (lbs)	Min. Brace Assembly E - Pages	Min. Brace Anchorage [6] Form Pour [4] Deck Page D1	Min. Brace Anchorage [6] Metal [5] Deck Page D2	Max. [2] Brace Spacing (ft.)	Brace [3] Reaction P (lbs)	Min. Brace Assembly E - Pages	Min. Brace Anchorage [6] Form Pour [4] Deck Page D1	Min. Brace Anchorage [6] Metal [5] Deck Page D2
				2-Way Transverse Brace Pattern (B15.0)					6-Way Transverse, Longitudinal Brace Pattern (B15.1)				
11.0	10	97	3/8	40	254	C38AA04WS	N3	L3	80	330	C38AA04WS	N4	L4
25.0	10	219	1/2	40	577	C12AA04WS	N6	L6	80	751	C12AA06WS	N8	L8
35.0	10	307	1/2	40	808	C12AA06WS	N9	L9	80	1,051	C12AA06WS	N11	L11
50.0	10	439	1/2	38	1,097	C12AA06WS	N11	L11	76	1,426	C12AA06WS	N15	L15
65.0	10	570	1/2	29	1,088	C12AA06WS	N11	L11	58	1,415	C12AA06WS	N15	L15
75.0	10	658	1/2	25	1,083	C12AA06WS	N11	L11	50	1,407	C12AA06WS	N15	L15
100.0	10	878	1/2	19	1,097	C12AA06WS	N11	L11	38	1,426	C12AA06WS	N15	L15
125.0	10	1,097	1/2	15	1,083	C12AA06WS	N11	L11	30	1,407	C12AA06WS	N15	L15
150.0	10	1,316	1/2	12	1,039	C12AA06WS	N11	L11	24	1,351	C12AA06WS	N14	L14
175.0	10	1,536	5/8	11	1,111	C58AA06WS	N12	L12	22	1,445	C58AA06WS	N15	L15

1. TVL = DL + Fv + ($0.2S_{DS}$/1.4 x Wp). All Terms Are Working Loads. Based On Eccentric Loading, 65% Of Total Load Allocated Per Rod.
2. Reductions In Actual Installed Brace Spacing Will Result In An Equal Percentage Reduction In Brace Reaction. As An Option When This Occurs ISAT May Substitute An Alternate Anchorage From Tables D1 or D2 Which Meets or Exceeds The Lowered Brace Reaction.
3. At Max. 30 Degree Brace Inclination.
4. Min. 3,000 psi NWC. Any "N Series" Connection May Be Utilized Having A Numeric Designation Equal To Or Higher Than That Shown.
5. Min. 3,000 psi NWC or LWC. Any "L Series" Connection May Be Utilized Having A Numeric Designation Equal To Or Higher Than That Shown.
6. As An Alternate, Brace Anchorage Connections To Structure May Be Employed Using Any Detail From Structural Connections Section "D" Series Details Where Assembly Design Value Meets Or Exceeds Brace Reaction.
7. For Trade Specific Bracing Installation Notes, Refer To Page 8.1 or 10.1.
8. Utilize Any "G" Series Vertical Support Connection Having A Design Value Equal To Or Greater Than The Corresponding "Rod Total Vertical Load".

REVIEWED FOR CODE COMPLIANCE
OPM-0403
BY: William Staehlin
DATE: 01-26-2024
CALIFORNIA BUILDING CODE, 2019

REGISTERED PROFESSIONAL ENGINEER MARCIN WASAZNIK S-6612 STRUCTURAL STATE OF CALIFORNIA

ISAT
A Division of Tomarco Contractor Specialties
International Seismic Application Technology
14848 Northam Street, La Mirada, CA 90638
877-999-4728 (Toll Free) 714-523-0845 (Fax)
www.isatsb.com

Rev. 0
08/03/18
Page
C16-0.5-30

CABLE BRACING REQUIREMENTS [7]:

TRAPEZE MOUNTED PIPING (Plumbing, Mechanical, Process, Medical Gas) — **MAXIMUM SEISMIC DESIGN FORCE = 0.50 G's**

Requires Use of ISAT Seismic Brackets. Use of Any Non-ISAT Bracket Voids Engineering. — *2013 California Building Code Compliant*

Maximum Trapeze Load (lbs/lf)	Max. Vertical Support Spacing (ft.)	Rod [1] Total Vertical Load (lbs)	Min. [8] Vertical Support Rod Dia. (in.)	TRANSVERSE BRACING REQUIREMENTS					LONGITUDINAL BRACING REQUIREMENTS				
				Max. [2] Brace Spacing (ft.)	Brace [3] Reaction P (lbs)	Min. Brace Assembly E - Pages	Min. Brace Anchorage [6] Form Pour [4] Deck Page D1	Min. Brace Anchorage [6] Metal [5] Deck Page D2	Max. [2] Brace Spacing (ft.)	Brace [3] Reaction P (lbs)	Min. Brace Assembly E - Pages	Min. Brace Anchorage [6] Form Pour [4] Deck Page D1	Min. Brace Anchorage [6] Metal [5] Deck Page D2
				2-Way Transverse Brace Pattern (B15.0)					6-Way Transverse, Longitudinal Brace Pattern (B15.1)				
11.0	10	97	1/2	40	342	C12AA04WS	N4	L4	80	445	C12AA04WS	N5	L5
25.0	10	219	1/2	40	778	C12AA06WS	N8	L8	80	1,011	C12AA06WS	N11	L11
35.0	10	307	5/8	40	1,089	C58AA06WS	N11	L11	80	1,416	C58AA06WS	N15	L15
50.0	10	439	3/4	30	1,167	C34AA06WS	N12	L12	60	1,517	C34DG06TS	N16	L16
65.0	10	570	5/8	22	1,112	C58AA06WS	N12	L12	44	1,446	C58AA06WS	N15	L15
75.0	10	658	3/4	20	1,167	C34AA06WS	N12	L12	40	1,517	C34DG06TS	N16	L16
100.0	10	878	5/8	14	1,089	C58AA06WS	N11	L11	28	1,416	C58AA06WS	N15	L15
125.0	10	1,097	5/8	12	1,167	C58AA06WS	N12	L12	24	1,517	C58DG06TS	N16	L16
150.0	10	1,316	5/8	10	1,167	C58AA06WS	N12	L12	20	1,517	C58DG06TS	N16	L16

1. TVL = DL + Fv + ($0.2S_{DS}$/1.4 x Wp). All Terms Are Working Loads. Based On Eccentric Loading, 65% Of Total Load Allocated Per Rod.
2. Reductions In Actual Installed Brace Spacing Will Result In An Equal Percentage Reduction In Brace Reaction. As An Option When This Occurs ISAT May Substitute An Alternate Anchorage From Tables D1 or D2 Which Meets or Exceeds The Lowered Brace Reaction.
3. At Max. 50 Degree Brace Inclination.
4. Min. 3,000 psi NWC. Any "N Series" Connection May Be Utilized Having A Numeric Designation Equal To Or Higher Than That Shown.
5. Min. 3,000 psi NWC or LWC. Any "L Series" Connection May Be Utilized Having A Numeric Designation Equal To Or Higher Than That Shown.
6. As An Alternate, Brace Anchorage Connections To Structure May Be Employed Using Any Detail From Structural Connections Section "D" Series Details Where Assembly Design Value Meets Or Exceeds Brace Reaction.
7. For Trade Specific Bracing Installation Notes, Refer To Page 8.1 or 10.1
8. Utilize Any "G" Series Vertical Support Connection Having A Design Value Equal To Or Greater Than The Corresponding "Rod Total Vertical Load".

REVIEWED FOR CODE COMPLIANCE
OPM-0403
BY: William Staehlin
DATE: 01-26-2024
CALIFORNIA BUILDING CODE, 2019

REGISTERED PROFESSIONAL ENGINEER MARCIN WASAZNIK S 6612 STRUCTURAL STATE OF CALIFORNIA

ISAT
A Division of Tomarco Contractor Specialties
International Seismic Application Technology
14848 Northam Street, La Mirada, CA 90638
877-999-4728 (Toll Free) 714-523-0845 (Fax)
www.isatsb.com

Rev. 0
08/03/18
Page
C16-0.5-45

CABLE BRACING REQUIREMENTS [7]:

TRAPEZE MOUNTED PIPING (Plumbing, Mechanical, Process, Medical Gas) — **MAXIMUM SEISMIC DESIGN FORCE = 0.50 G's**

Requires Use of ISAT Seismic Brackets. Use of Any Non-ISAT Bracket Voids Engineering. — *2013 California Building Code Compliant*

Maximum Trapeze Load (lbs/lf)	Max. Vertical Support Spacing (ft.)	Rod [1] Total Vertical Load (lbs)	Min. [8] Vertical Support Rod Dia. (in.)	TRANSVERSE BRACING REQUIREMENTS					LONGITUDINAL BRACING REQUIREMENTS				
				Max. [2] Brace Spacing (ft.)	Brace [3] Reaction P (lbs)	Min. Brace Assembly E - Pages	Min. Brace Anchorage [6] Form Pour [4] Deck Page D1	Min. Brace Anchorage [6] Metal [5] Deck Page D2	Max. [2] Brace Spacing (ft.)	Brace [3] Reaction P (lbs)	Min. Brace Assembly E - Pages	Min. Brace Anchorage [6] Form Pour [4] Deck Page D1	Min. Brace Anchorage [6] Metal [5] Deck Page D2
				2-Way Transverse Brace Pattern (B15.0)					6-Way Transverse, Longitudinal Brace Pattern (B15.1)				
11.0	10	97	1/2	40	440	C12AA04WS	N5	L5	80	572	C12AA04WS	N6	L6
25.0	10	219	3/4	40	1,000	C34DG06WS	N10	L10	80	1,300	C34DG06WS	N13	L13
35.0	10	307	3/4	32	1,120	C34DG06WS	N12	L12	64	1,456	C34DG06WS	N15	L15
50.0	10	439	3/4	22	1,100	C34DG06WS	N11	L11	44	1,430	C34DG06WS	N15	L15
65.0	10	570	3/4	17	1,105	C34DG06WS	N12	L12	34	1,437	C34DG06WS	N15	L15
75.0	10	658	3/4	15	1,125	C34DG06WS	N12	L12	30	1,463	C34DG06WS	N15	L15
100.0	10	878	3/4	11	1,100	C34DG06WS	N11	L11	22	1,430	C34DG06WS	N15	L15

1. TVL = DL + Fv + ($0.2S_{DS}$/1.4 x Wp). All Terms Are Working Loads. Based On Eccentric Loading, 65% Of Total Load Allocated Per Rod.
2. Reductions In Actual Installed Brace Spacing Will Result In An Equal Percentage Reduction In Brace Reaction. As An Option When This Occurs ISAT May Substitute An Alternate Anchorage From Tables D1 or D2 Which Meets or Exceeds The Lowered Brace Reaction.
3. At Max. 60 Degree Brace Inclination.
4. Min. 3,000 psi NWC. Any "N Series" Connection May Be Utilized Having A Numeric Designation Equal To Or Higher Than That Shown.
5. Min. 3,000 psi NWC or LWC. Any "L Series" Connection May Be Utilized Having A Numeric Designation Equal To Or Higher Than That Shown.
6. As An Alternate, Brace Anchorage Connections To Structure May Be Employed Using Any Detail From Structural Connections Section "D" Series Details Where Assembly Design Value Meets Or Exceeds Brace Reaction.
7. For Trade Specific Bracing Installation Notes, Refer To Page 8.1 or 10.1.
8. Utilize Any "G" Series Vertical Support Connection Having A Design Value Equal To Or Greater Than The Corresponding "Rod Total Vertical Load".

REVIEWED FOR CODE COMPLIANCE
OPM-0403
BY: William Staehlin
DATE: 01-26-2024
CALIFORNIA BUILDING CODE, 2022

REGISTERED PROFESSIONAL ENGINEER
MARCIN WASAZNIK
S 6612
STRUCTURAL
STATE OF CALIFORNIA

ISAT
A Division of Tomarco Contractor Specialties
International Seismic Application Technology
14848 Northam Street, La Mirada, CA 90638
877-999-4728 (Toll Free) 714-523-0845 (Fax)
www.isatsb.com

Rev. 2
03/12/19
Page
C16-0.5-60

CABLE BRACING REQUIREMENTS [7]:

TRAPEZE MOUNTED PIPING (Plumbing, Mechanical, Process, Medical Gas) — **MAXIMUM SEISMIC DESIGN FORCE = 0.75 G's**

Requires Use of ISAT Seismic Brackets. Use of Any Non-ISAT Bracket Voids Engineering. — *2013 California Building Code Compliant*

Maximum Trapeze Load (lbs/lf)	Max. Vertical Support Spacing (ft.)	Rod [1] Total Vertical Load (lbs)	Min. [8] Vertical Support Rod Dia. (in.)	TRANSVERSE BRACING REQUIREMENTS					LONGITUDINAL BRACING REQUIREMENTS				
				Max. [2] Brace Spacing (ft.)	Brace [3] Reaction P (lbs)	Min. Brace Assembly E - Pages	Min. Brace Anchorage [6] Form Pour [4] Deck Page D1	Min. Brace Anchorage [6] Metal [5] Deck Page D2	Max. [2] Brace Spacing (ft.)	Brace [3] Reaction P (lbs)	Min. Brace Assembly E - Pages	Min. Brace Anchorage [6] Form Pour [4] Deck Page D1	Min. Brace Anchorage [6] Metal [5] Deck Page D2
				2-Way Transverse Brace Pattern (B15.0)					6-Way Transverse, Longitudinal Brace Pattern (B15.1)				
11.0	10	97	3/8	40	381	C38AA04WS	N4	L4	80	495	C38AA04WS	N5	L5
25.0	10	219	1/2	40	866	C12AA06WS	N9	L9	80	1,126	C12AA06WS	N12	L12
35.0	10	307	1/2	36	1,091	C12AA06WS	N11	L11	72	1,419	C12AA06WS	N15	L15
50.0	10	439	1/2	25	1,083	C12AA06WS	N11	L11	50	1,407	C12AA06WS	N15	L15
65.0	10	570	1/2	19	1,070	C12AA06WS	N11	L11	38	1,390	C12AA06WS	N14	L14
75.0	10	658	1/2	17	1,104	C12AA06WS	N12	L12	34	1,435	C12AA06WS	N15	L15
100.0	10	878	1/2	12	1,039	C12AA06WS	N11	L11	24	1,351	C12AA06WS	N14	L14
125.0	10	1,097	1/2	10	1,083	C12AA06WS	N11	L11	20	1,407	C12AA06WS	N15	L15

1. TVL = DL + Fv + ($0.2S_{DS}$/1.4 x Wp). All Terms Are Working Loads. Based On Eccentric Loading, 65% Of Total Load Allocated Per Rod.
2. Reductions In Actual Installed Brace Spacing Will Result In An Equal Percentage Reduction In Brace Reaction. As An Option When This Occurs ISAT May Substitute An Alternate Anchorage From Tables D1 or D2 Which Meets or Exceeds The Lowered Brace Reaction.
3. At Max. 30 Degree Brace Inclination.
4. Min. 3,000 psi NWC. Any "N Series" Connection May Be Utilized Having A Numeric Designation Equal To Or Higher Than That Shown.
5. Min. 3,000 psi NWC or LWC. Any "L Series" Connection May Be Utilized Having A Numeric Designation Equal To Or Higher Than That Shown.
6. As An Alternate, Brace Anchorage Connections To Structure May Be Employed Using Any Detail From Structural Connections Section "D" Series Details Where Assembly Design Value Meets Or Exceeds Brace Reaction.
7. For Trade Specific Bracing Installation Notes, Refer To Page 8.1 or 10.1.
8. Utilize Any "G" Series Vertical Support Connection Having A Design Value Equal To Or Greater Than The Corresponding "Rod Total Vertical Load".

REVIEWED FOR CODE COMPLIANCE
OPM-0403
BY: William Staehlin
DATE: 01-26-2024
CALIFORNIA BUILDING CODE, 2022

REGISTERED PROFESSIONAL ENGINEER MARCIN WASAZNIK S-6612 STRUCTURAL STATE OF CALIFORNIA

ISAT
A Division of Tomarco Contractor Specialties
International Seismic Application Technology
14848 Northam Street, La Mirada, CA 90638
877-999-4728 (Toll Free) 714-523-0845 (Fax)
www.isatsb.com

Rev. 0
08/03/18
Page
C16-0.75-30

CABLE BRACING REQUIREMENTS [7]:

TRAPEZE MOUNTED PIPING (Plumbing, Mechanical, Process, Medical Gas) — **MAXIMUM SEISMIC DESIGN FORCE = 0.75 G's**

Requires Use of ISAT Seismic Brackets. Use of Any Non-ISAT Bracket Voids Engineering. — *2013 California Building Code Compliant*

Maximum Trapeze Load (lbs/lf)	Max. Vertical Support Spacing (ft.)	Rod [1] Total Vertical Load (lbs)	Min. [8] Vertical Support Rod Dia. (in.)	TRANSVERSE BRACING REQUIREMENTS					LONGITUDINAL BRACING REQUIREMENTS				
				Max. [2] Brace Spacing (ft.)	Brace [3] Reaction P (lbs)	Min. Brace Assembly E - Pages	Min. Brace Anchorage [6] Form Pour [4] Deck Page D1	Min. Brace Anchorage [6] Metal [5] Deck Page D2	Max. [2] Brace Spacing (ft.)	Brace [3] Reaction P (lbs)	Min. Brace Assembly E - Pages	Min. Brace Anchorage [6] Form Pour [4] Deck Page D1	Min. Brace Anchorage [6] Metal [5] Deck Page D2
				2-Way Transverse Brace Pattern (B15.0)					6-Way Transverse, Longitudinal Brace Pattern (B15.1)				
11.0	10	97	1/2	40	513	C12AA04WS	N6	L6	80	667	C12AA04WS	N7	L7
25.0	10	219	3/4	40	1,167	C34DG06WS	N12	L12	80	1,517	C34DG06TS	N16	L16
35.0	10	307	3/4	28	1,143	C34DG06WS	N12	L12	56	1,486	C34DG06TS	N15	L15
50.0	10	439	3/4	20	1,167	C34DG06WS	N12	L12	40	1,517	C34DG06TS	N16	L16
65.0	10	570	5/8	14	1,062	C58AA06WS	N11	L11	28	1,380	C58AA06WS	N14	L14
75.0	10	658	5/8	12	1,050	C58AA06WS	N11	L11	24	1,365	C58AA06WS	N14	L14
100.0	10	878	5/8	10	1,167	C58AA06WS	N12	L12	20	1,517	C58DG06TS	N16	L16

1. TVL = DL + Fv + ($0.2S_{DS}$/1.4 x Wp). All Terms Are Working Loads. Based On Eccentric Loading, 65% Of Total Load Allocated Per Rod.
2. Reductions In Actual Installed Brace Spacing Will Result In An Equal Percentage Reduction In Brace Reaction. As An Option When This Occurs ISAT May Substitute An Alternate Anchorage From Tables D1 or D2 Which Meets or Exceeds The Lowered Brace Reaction.
3. At Max. 50 Degree Brace Inclination.
4. Min. 3,000 psi NWC. Any "N Series" Connection May Be Utilized Having A Numeric Designation Equal To Or Higher Than That Shown.
5. Min. 3,000 psi NWC or LWC. Any "L Series" Connection May Be Utilized Having A Numeric Designation Equal To Or Higher Than That Shown.
6. As An Alternate, Brace Anchorage Connections To Structure May Be Employed Using Any Detail From Structural Connections Section "D" Series Details Where Assembly Design Value Meets Or Exceeds Brace Reaction.
7. For Trade Specific Bracing Installation Notes, Refer To Page 8.1 or 10.1
8. Utilize Any "G" Series Vertical Support Connection Having A Design Value Equal To Or Greater Than The Corresponding "Rod Total Vertical Load".

REVIEWED FOR CODE COMPLIANCE
OPM-0403
By: William Staehlin
DATE: 01-26-2024
CALIFORNIA BUILDING CODE, 2022

REGISTERED PROFESSIONAL ENGINEER
MARCIN WASAZNIK
S-6612
STRUCTURAL
STATE OF CALIFORNIA

ISAT
A Division of Tomarco Contractor Specialties
International Seismic Application Technology
14848 Northam Street, La Mirada, CA 90638
877-999-4728 (Toll Free) 714-523-0845 (Fax)
www.isatsb.com

Rev. 1
03/12/19
Page
C16-0.75-45

CABLE BRACING REQUIREMENTS [7]:

TRAPEZE MOUNTED PIPING (Plumbing, Mechanical, Process, Medical Gas) — **MAXIMUM SEISMIC DESIGN FORCE = 0.75 G's**

Requires Use of ISAT Seismic Brackets. Use of Any Non-ISAT Bracket Voids Engineering. — *2013 California Building Code Compliant*

Maximum Trapeze Load (lbs/lf)	Max. Vertical Support Spacing (ft.)	Rod [1] Total Vertical Load (lbs)	Min. [8] Vertical Support Rod Dia. (in.)	TRANSVERSE BRACING REQUIREMENTS					LONGITUDINAL BRACING REQUIREMENTS				
				Max. [2] Brace Spacing (ft.)	Brace [3] Reaction P (lbs)	Min. Brace Assembly E - Pages	Min. Brace Anchorage [6] Form Pour [4] Deck Page D1	Min. Brace Anchorage [6] Metal [5] Deck Page D2	Max. [2] Brace Spacing (ft.)	Brace [3] Reaction P (lbs)	Min. Brace Assembly E - Pages	Min. Brace Anchorage [6] Form Pour [4] Deck Page D1	Min. Brace Anchorage [6] Metal [5] Deck Page D2
				2-Way Transverse Brace Pattern (B15.0)					6-Way Transverse, Longitudinal Brace Pattern (B15.1)				
11.0	10	97	1/2	40	660	C12AA04WS	N7	L7	80	858	C12AA06WS	N9	L9
25.0	10	219	3/4	30	1,125	C34DG06WS	N12	L12	60	1,463	C34DG06WS	N15	L15
35.0	10	307	3/4	21	1,103	C34DG06WS	N12	L12	42	1,433	C34DG06WS	N15	L15
50.0	10	439	3/4	15	1,125	C34DG06WS	N12	L12	30	1,463	C34DG06WS	N15	L15
65.0	10	570	3/4	11	1,073	C34DG06WS	N11	L11	22	1,394	C34DG06WS	N14	L14
75.0	10	658	3/4	10	1,125	C34DG06WS	N12	L12	20	1,463	C34DG06WS	N15	L15

1. TVL = DL + Fv + ($0.2S_{DS}$/1.4 x Wp). All Terms Are Working Loads. Based On Eccentric Loading, 65% Of Total Load Allocated Per Rod.
2. Reductions In Actual Installed Brace Spacing Will Result In An Equal Percentage Reduction In Brace Reaction. As An Option When This Occurs ISAT May Substitute An Alternate Anchorage From Tables D1 or D2 Which Meets or Exceeds The Lowered Brace Reaction.
3. At Max. 60 Degree Brace Inclination.
4. Min. 3,000 psi NWC. Any "N Series" Connection May Be Utilized Having A Numeric Designation Equal To Or Higher Than That Shown.
5. Min. 3,000 psi NWC or LWC. Any "L Series" Connection May Be Utilized Having A Numeric Designation Equal To Or Higher Than That Shown.
6. As An Alternate, Brace Anchorage Connections To Structure May Be Employed Using Any Detail From Structural Connections Section "D" Series Details Where Assembly Design Value Meets Or Exceeds Brace Reaction.
7. For Trade Specific Bracing Installation Notes, Refer To Page 8.1 or 10.1.
8. Utilize Any "G" Series Vertical Support Connection Having A Design Value Equal To Or Greater Than The Corresponding "Rod Total Vertical Load".

REVIEWED FOR CODE COMPLIANCE
OPM-0403
BY: William Staehlin
DATE: 01-26-2024
CALIFORNIA BUILDING CODE 2022

REGISTERED PROFESSIONAL ENGINEER MARCIN WASAZNIK S-6612 STRUCTURAL STATE OF CALIFORNIA

ISAT
A Division of Tomarco Contractor Specialties
International Seismic Application Technology
14848 Northam Street, La Mirada, CA 90638
877-999-4728 (Toll Free) 714-523-0845 (Fax)
www.isatsb.com

Rev. 1
03/12/19
Page
C16-0.75-60

CABLE BRACING REQUIREMENTS [7]:

TRAPEZE MOUNTED PIPING (Plumbing, Mechanical, Process, Medical Gas) — **MAXIMUM SEISMIC DESIGN FORCE = 1.00 G's**

Requires Use of ISAT Seismic Brackets. Use of Any Non-ISAT Bracket Voids Engineering. — *2013 California Building Code Compliant*

Maximum Trapeze Load (lbs/lf)	Max. Vertical Support Spacing (ft.)	Rod [1] Total Vertical Load (lbs)	Min. [8] Vertical Support Rod Dia. (in.)	TRANSVERSE BRACING REQUIREMENTS					LONGITUDINAL BRACING REQUIREMENTS				
				Max. [2] Brace Spacing (ft.)	Brace [3] Reaction P (lbs)	Min. Brace Assembly E - Pages	Min. Brace Anchorage [6] Form Pour [4] Deck Page D1	Min. Brace Anchorage [6] Metal [5] Deck Page D2	Max. [2] Brace Spacing (ft.)	Brace [3] Reaction P (lbs)	Min. Brace Assembly E - Pages	Min. Brace Anchorage [6] Form Pour [4] Deck Page D1	Min. Brace Anchorage [6] Metal [5] Deck Page D2
				2-Way Transverse Brace Pattern (B15.0)					6-Way Transverse, Longitudinal Brace Pattern (B15.1)				
11.0	10	97	1/2	40	508	C12AA04WS	N6	L6	80	660	C12AA04WS	N7	L7
25.0	10	219	1/2	38	1,097	C12AA06WS	N11	L11	76	1,426	C12AA06WS	N15	L15
35.0	10	307	1/2	27	1,091	C12AA06WS	N11	L11	54	1,419	C12AA06WS	N15	L15
50.0	10	439	1/2	19	1,097	C12AA06WS	N11	L11	38	1,426	C12AA06WS	N15	L15
65.0	10	570	1/2	14	1,051	C12AA06WS	N11	L11	28	1,366	C12AA06WS	N14	L14
75.0	10	658	1/2	12	1,039	C12AA06WS	N11	L11	24	1,351	C12AA06WS	N14	L14

1. TVL = DL + Fv + ($0.2S_{DS}$/1.4 x Wp). All Terms Are Working Loads. Based On Eccentric Loading, 65% Of Total Load Allocated Per Rod.
2. Reductions In Actual Installed Brace Spacing Will Result In An Equal Percentage Reduction In Brace Reaction. As An Option When This Occurs ISAT May Substitute An Alternate Anchorage From Tables D1 or D2 Which Meets or Exceeds The Lowered Brace Reaction.
3. At Max. 30 Degree Brace Inclination.
4. Min. 3,000 psi NWC. Any "N Series" Connection May Be Utilized Having A Numeric Designation Equal To Or Higher Than That Shown.
5. Min. 3,000 psi NWC or LWC. Any "L Series" Connection May Be Utilized Having A Numeric Designation Equal To Or Higher Than That Shown.
6. As An Alternate, Brace Anchorage Connections To Structure May Be Employed Using Any Detail From Structural Connections Section "D" Series Details Where Assembly Design Value Meets Or Exceeds Brace Reaction.
7. For Trade Specific Bracing Installation Notes, Refer To Page 8.1 or 10.1.
8. Utilize Any "G" Series Vertical Support Connection Having A Design Value Equal To Or Greater Than The Corresponding "Rod Total Vertical Load".

REVIEWED FOR CODE COMPLIANCE
OPM-0403
BY: William Staehlin
DATE: 01-26-2024
CALIFORNIA BUILDING CODE, 2022

REGISTERED PROFESSIONAL ENGINEER
MARCIN WASAZNIK
S 6612
STRUCTURAL
STATE OF CALIFORNIA

ISAT
A Division of Tomarco Contractor Specialties
International Seismic Application Technology
14848 Northam Street, La Mirada, CA 90638
877-999-4728 (Toll Free) 714-523-0845 (Fax)
www.isatsb.com

Rev. 0
08/03/18
Page
C16-1-30

CABLE BRACING REQUIREMENTS [7]:

TRAPEZE MOUNTED PIPING (Plumbing, Mechanical, Process, Medical Gas) — **MAXIMUM SEISMIC DESIGN FORCE = 1.00 G's**

Requires Use of ISAT Seismic Brackets. Use of Any Non-ISAT Bracket Voids Engineering. — *2013 California Building Code Compliant*

Maximum Trapeze Load (lbs/lf)	Max. Vertical Support Spacing (ft.)	Rod [1] Total Vertical Load (lbs)	Min. [8] Vertical Support Rod Dia. (in.)	TRANSVERSE BRACING REQUIREMENTS					LONGITUDINAL BRACING REQUIREMENTS				
				Max. [2] Brace Spacing (ft.)	Brace [3] Reaction P (lbs)	Min. Brace Assembly E - Pages	Min. Brace Anchorage [6] Form Pour [4] Deck Page D1	Min. Brace Anchorage [6] Metal [5] Deck Page D2	Max. [2] Brace Spacing (ft.)	Brace [3] Reaction P (lbs)	Min. Brace Assembly E - Pages	Min. Brace Anchorage [6] Form Pour [4] Deck Page D1	Min. Brace Anchorage [6] Metal [5] Deck Page D2
				2-Way Transverse Brace Pattern (B15.0)					6-Way Transverse, Longitudinal Brace Pattern (B15.1)				
11.0	10	97	1/2	40	685	C12AA06WS	N7	L7	80	890	C12AA06WS	N9	L9
25.0	10	219	3/4	30	1,167	C34DG06WS	N12	L12	60	1,517	C34DG06TS	N16	L16
35.0	10	307	3/4	22	1,198	C34DG06WS	N12	L12	44	1,557	C34DG06TS	N16	L16
50.0	10	439	5/8	14	1,089	C58AA06WS	N11	L11	28	1,416	C58AA06WS	N15	L15
65.0	10	570	5/8	10	1,011	C58AA06WS	N11	L11	20	1,315	C58AA06WS	N14	L14
75.0	10	658	3/4	10	1,167	C34DG06WS	N12	L12	20	1,517	C34DG06TS	N16	L16

1. TVL = DL + Fv + ($0.2S_{DS}$/1.4 x Wp). All Terms Are Working Loads. Based On Eccentric Loading, 65% Of Total Load Allocated Per Rod.
2. Reductions In Actual Installed Brace Spacing Will Result In An Equal Percentage Reduction In Brace Reaction. As An Option When This Occurs ISAT May Substitute An Alternate Anchorage From Tables D1 or D2 Which Meets or Exceeds The Lowered Brace Reaction.
3. At Max. 50 Degree Brace Inclination.
4. Min. 3,000 psi NWC. Any "N Series" Connection May Be Utilized Having A Numeric Designation Equal To Or Higher Than That Shown.
5. Min. 3,000 psi NWC or LWC. Any "L Series" Connection May Be Utilized Having A Numeric Designation Equal To Or Higher Than That Shown.
6. As An Alternate, Brace Anchorage Connections To Structure May Be Employed Using Any Detail From Structural Connections Section "D" Series Details Where Assembly Design Value Meets Or Exceeds Brace Reaction.
7. For Trade Specific Bracing Installation Notes, Refer To Page 8.1 or 10.1
8. Utilize Any "G" Series Vertical Support Connection Having A Design Value Equal To Or Greater Than The Corresponding "Rod Total Vertical Load".

REVIEWED FOR CODE COMPLIANCE
OPM-0403
BY: William Staehlin
DATE: 01-26-2024
CALIFORNIA BUILDING CODE 2022

REGISTERED PROFESSIONAL ENGINEER
NARCIN WASAZNIK
S-6612
STRUCTURAL
STATE OF CALIFORNIA

ISAT
A Division of Tomarco Contractor Specialties
International Seismic Application Technology
14848 Northam Street, La Mirada, CA 90638
877-999-4728 (Toll Free) 714-523-0845 (Fax)
www.isatsb.com

Rev. 1
03/12/19
Page
C16-1-45

CABLE BRACING REQUIREMENTS [7]:

TRAPEZE MOUNTED PIPING (Plumbing, Mechanical, Process, Medical Gas) — **MAXIMUM SEISMIC DESIGN FORCE = 1.00 G's**

Requires Use of ISAT Seismic Brackets. Use of Any Non-ISAT Bracket Voids Engineering. — *2013 California Building Code Compliant*

Maximum Trapeze Load (lbs/lf)	Max. Vertical Support Spacing (ft.)	Rod [1] Total Vertical Load (lbs)	Min. [8] Vertical Support Rod Dia. (in.)	TRANSVERSE BRACING REQUIREMENTS					LONGITUDINAL BRACING REQUIREMENTS				
				Max. [2] Brace Spacing (ft.)	Brace [3] Reaction P (lbs)	Min. Brace Assembly E - Pages	Min. Brace Anchorage [6] Form Pour [4] Deck Page D1	Min. Brace Anchorage [6] Metal [5] Deck Page D2	Max. [2] Brace Spacing (ft.)	Brace [3] Reaction P (lbs)	Min. Brace Assembly E - Pages	Min. Brace Anchorage [6] Form Pour [4] Deck Page D1	Min. Brace Anchorage [6] Metal [5] Deck Page D2
				2-Way Transverse Brace Pattern (B15.0)					6-Way Transverse, Longitudinal Brace Pattern (B15.1)				
11.0	10	97	5/8	40	880	C58AA06WS	N9	L9	80	1,144	C58AA06WS	N12	L12
25.0	10	219	3/4	20	1,000	C34DG06WS	N10	L10	40	1,300	C34DG06WS	N13	L13
35.0	10	307	3/4	16	1,120	C34DG06WS	N12	L12	32	1,456	C34DG06WS	N15	L15
50.0	10	439	3/4	11	1,100	C34DG06WS	N11	L11	22	1,430	C34DG06WS	N15	L15

1. TVL = DL + Fv + ($0.2S_{DS}$/1.4 x Wp). All Terms Are Working Loads. Based On Eccentric Loading, 65% Of Total Load Allocated Per Rod.
2. Reductions In Actual Installed Brace Spacing Will Result In An Equal Percentage Reduction In Brace Reaction. As An Option When This Occurs ISAT May Substitute An Alternate Anchorage From Tables D1 or D2 Which Meets or Exceeds The Lowered Brace Reaction.
3. At Max. 60 Degree Brace Inclination.
4. Min. 3,000 psi NWC. Any "N Series" Connection May Be Utilized Having A Numeric Designation Equal To Or Higher Than That Shown.
5. Min. 3,000 psi NWC or LWC. Any "L Series" Connection May Be Utilized Having A Numeric Designation Equal To Or Higher Than That Shown.
6. As An Alternate, Brace Anchorage Connections To Structure May Be Employed Using Any Detail From Structural Connections Section "D" Series Details Where Assembly Design Value Meets Or Exceeds Brace Reaction.
7. For Trade Specific Bracing Installation Notes, Refer To Page 8.1 or 10.1.
8. Utilize Any "G" Series Vertical Support Connection Having A Design Value Equal To Or Greater Than The Corresponding "Rod Total Vertical Load".

REVIEWED FOR CODE COMPLIANCE
HCAI
OPM-0403
BY: William Staehlin
DATE: 01-26-2024
CALIFORNIA BUILDING CODE 2022

REGISTERED PROFESSIONAL ENGINEER
MARCIN WASAZNIK
S-6612
STRUCTURAL
STATE OF CALIFORNIA

ISAT
A Division of Tomarco Contractor Specialties
International Seismic Application Technology
14848 Northam Street, La Mirada, CA 90638
877-999-4728 (Toll Free) 714-523-0845 (Fax)
www.isatsb.com

Rev. 2
03/12/19
Page
C16-1-60

CABLE BRACING REQUIREMENTS [7]:

2-TIERED TRAPEZE MOUNTED PIPING (Plumbing, Mechanical, Process, Medical Gas) — **MAXIMUM SEISMIC DESIGN FORCE = 0.25 G's**

Requires Use of ISAT Seismic Brackets. Use of Any Non-ISAT Bracket Voids Engineering. — *2013 California Building Code Compliant*

Combined 2-Tier Maximum Trapeze Load (lbs/lf)	Max. Vertical Support Spacing (ft.)	Rod [1] Total Vertical Load (lbs)	Min. [8] Vertical Support Rod Dia. (in.)	TRANSVERSE BRACING REQUIREMENTS					LONGITUDINAL BRACING REQUIREMENTS				
				Max. [2] Brace Spacing (ft.)	Brace [3] Reaction P (lbs)	Min. Brace Assembly E - Pages	Min. Brace Anchorage [6] Form Pour [4] Deck Page D1	Min. Brace Anchorage [6] Metal [5] Deck Page D2	Max. [2] Brace Spacing (ft.)	Brace [3] Reaction P (lbs)	Min. Brace Assembly E - Pages	Min. Brace Anchorage [6] Form Pour [4] Deck Page D1	Min. Brace Anchorage [6] Metal [5] Deck Page D2
				2-Way Transverse Brace Pattern (B16.0)					6-Way Transverse, Longitudinal Brace Pattern (B16.1)				
11.0	10	97	3/8	40	64	C38AA04WS	N1	L1	80	83	C38AA04WS	N1	L1
25.0	10	219	1/2	40	144	C12AA04WS	N2	L2	80	188	C12AA04WS	N2	L2
35.0	10	307	1/2	40	202	C12AA04WS	N3	L3	80	263	C12AA04WS	N3	L3
50.0	10	439	1/2	40	289	C12AA04WS	N3	L3	80	375	C12AA04WS	N4	L4
65.0	10	570	1/2	40	375	C12AA04WS	N4	L4	80	488	C12AA04WS	N5	L5
75.0	10	658	1/2	40	433	C12AA04WS	N5	L5	80	563	C12AA04WS	N6	L6
100.0	10	878	1/2	40	577	C12AA04WS	N6	L6	80	751	C12AA06WS	N8	L8
125.0	10	1,097	5/8	40	722	C58AA06WS	N8	L8	80	938	C58AA06WS	N10	L10
150.0	10	1,316	5/8	40	866	C58AA06WS	N9	L9	80	1,126	C58AA06WS	N12	L12
175.0	10	1,536	5/8	37	935	C58AA06WS	N10	L10	74	1,215	C58AA06WS	N13	L13
200.0	10	1,755	5/8	32	924	C58AA06WS	N10	L10	64	1,201	C58AA06WS	N13	L13
225.0	10	1,974	5/8	29	942	C58AA06WS	N10	L10	58	1,224	C58AA06WS	N13	L13

1. TVL = DL + Fv + ($0.2S_{DS}$/1.4 x Wp). All Terms Are Working Loads. Based On Eccentric Loading, 65% Of Total Load Allocated Per Rod.
2. Reductions In Actual Installed Brace Spacing Will Result In An Equal Percentage Reduction In Brace Reaction. As An Option When This Occurs ISAT May Substitute An Alternate Anchorage From Tables D1 or D2 Which Meets or Exceeds The Lowered Brace Reaction.
3. At Max. 30 Degree Brace Inclination. Assumes 50% Of Total Trapeze Load Per Tier.
4. Min. 3,000 psi NWC. Any "N Series" Connection May Be Utilized Having A Numeric Designation Equal To Or Higher Than That Shown.
   A Numeric Designation Equal To Or Higher Than That Shown.
5. Min. 3,000 psi NWC or LWC. Any "L Series" Connection May Be Utilized Having A Numeric Designation Equal To Or Higher Than That Shown.
6. As An Alternate, Brace Anchorage Connections To Structure May Be Employed Using Any Detail From Structural Connections Section "D" Series Details Where Assembly Design Value Meets Or Exceeds Brace Reaction.
7. For Trade Specific Bracing Installation Notes, Refer To Page 8.1 or 10.1.
8. Utilize Any "G" Series Vertical Support Connection Having A Design Value Equal To Or Greater Than The Corresponding "Rod Total Vertical Load".

REVIEWED FOR CODE COMPLIANCE BY: William Staehlin DATE: 01-26-2024 CALIFORNIA BUILDING CODE

REGISTERED PROFESSIONAL ENGINEER NARCIN WASAZNIK S 6612 STRUCTURAL STATE OF CALIFORNIA

ISAT
A Division of Tomarco Contractor Specialties
International Seismic Application Technology
14848 Northam Street, La Mirada, CA 90638
877-999-4728 (Toll Free) 714-523-0845 (Fax)
www.isatsb.com

Rev. 1
03/12/19
Page
C16-0.25-30
2- Tier

CABLE BRACING REQUIREMENTS [7]:

2-TIERED TRAPEZE MOUNTED PIPING (Plumbing, Mechanical, Process, Medical Gas) — **MAXIMUM SEISMIC DESIGN FORCE = 0.25 G's**

Requires Use of ISAT Seismic Brackets. Use of Any Non-ISAT Bracket Voids Engineering. — *2013 California Building Code Compliant*

Combined 2-Tier Maximum Trapeze Load (lbs/lf)	Max. Vertical Support Spacing (ft.)	Rod [1] Total Vertical Load (lbs)	Min. [8] Vertical Support Rod Dia. (in.)	TRANSVERSE BRACING REQUIREMENTS					LONGITUDINAL BRACING REQUIREMENTS				
				Max. [2] Brace Spacing (ft.)	Brace [3] Reaction P (lbs)	Min. Brace Assembly E - Pages	Min. Brace Anchorage [6] Form Pour [4] Deck Page D1	Min. Brace Anchorage [6] Metal [5] Deck Page D2	Max. [2] Brace Spacing (ft.)	Brace [3] Reaction P (lbs)	Min. Brace Assembly E - Pages	Min. Brace Anchorage [6] Form Pour [4] Deck Page D1	Min. Brace Anchorage [6] Metal [5] Deck Page D2
				2-Way Transverse Brace Pattern (B16.0)					6-Way Transverse, Longitudinal Brace Pattern (B16.1)				
11.0	10	97	3/8	40	86	C38AA04WS	N1	L1	80	111	C38AA04WS	N2	L2
25.0	10	219	1/2	40	194	C12AA04WS	N2	L2	80	253	C12AA04WS	N3	L3
35.0	10	307	1/2	40	272	C12AA04WS	N3	L3	80	354	C12AA04WS	N4	L4
50.0	10	439	1/2	40	389	C12AA04WS	N4	L4	80	506	C12AA04WS	N6	L6
65.0	10	570	5/8	40	506	C58AA04WS	N6	L6	80	657	C58AA04WS	N7	L7
75.0	10	658	3/4	40	583	C34CF04WS	N6	L6	80	758	C34DG06WS	N8	L8
100.0	10	878	3/4	40	778	C34DG06WS	N8	L8	80	1,011	C34DG06WS	N11	L11
125.0	10	1,097	3/4	32	778	C34DG06WS	N8	L8	64	1,011	C34DG06WS	N11	L11
150.0	10	1,316	3/4	27	788	C34DG06WS	N8	L8	54	1,024	C34DG06WS	N11	L11
175.0	10	1,536	3/4	23	783	C34DG06WS	N8	L8	46	1,018	C34DG06WS	N11	L11
200.0	10	1,755	3/4	21	817	C34DG06WS	N9	L9	42	1,062	C34DG06WS	N11	L11
225.0	10	1,974	3/4	19	831	C34DG06WS	N9	L9	38	1,081	C34DG06WS	N11	L11

1. TVL = DL + Fv + ($0.2S_{DS}$/1.4 x Wp). All Terms Are Working Loads. Based On Eccentric Loading, 65% Of Total Load Allocated Per Rod.
2. Reductions In Actual Installed Brace Spacing Will Result In An Equal Percentage Reduction In Brace Reaction. As An Option When This Occurs ISAT May Substitute An Alternate Anchorage From Tables D1 or D2 Which Meets or Exceeds The Lowered Brace Reaction.
3. At Max. 50 Degree Brace Inclination. Assumes 50% Of Total Trapeze Load Per Tier.
4. Min. 3,000 psi NWC. Any "N Series" Connection May Be Utilized Having A Numeric Designation Equal To Or Higher Than That Shown. A Numeric Designation Equal To Or Higher Than That Shown.
5. Min. 3,000 psi NWC or LWC. Any "L Series" Connection May Be Utilized Having A Numeric Designation Equal To Or Higher Than That Shown.
6. As An Alternate, Brace Anchorage Connections To Structure May Be Employed Using Any Detail From Structural Connections Section "D" Series Details Where Assembly Design Value Meets Or Exceeds Brace Reaction.
7. For Trade Specific Bracing Installation Notes, Refer To Page 8.1 or 10.1.
8. Utilize Any "G" Series Vertical Support Connection Having A Design Value Equal To Or Greater Than The Corresponding "Rod Total Vertical Load".

REVIEWED FOR CODE COMPLIANCE
OPM 0403
By: William Staehlin
DATE: 03/26/2024
CALIFORNIA BUILDING CODE 2022

REGISTERED PROFESSIONAL ENGINEER
MARCIN WASAZNIK
S-6612
STRUCTURAL
STATE OF CALIFORNIA

ISAT
A Division of Tomarco Contractor Specialties

International Seismic Application Technology
14848 Northam Street, La Mirada, CA 90638
877-999-4728 (Toll Free) 714-523-0845 (Fax)
www.isatsb.com

Rev. 1
03/12/19
Page
C16-0.25-45
2- Tier

CABLE BRACING REQUIREMENTS [7]:

2-TIERED TRAPEZE MOUNTED PIPING (Plumbing, Mechanical, Process, Medical Gas) — **MAXIMUM SEISMIC DESIGN FORCE = 0.25 G's**

Requires Use of ISAT Seismic Brackets. Use of Any Non-ISAT Bracket Voids Engineering. — *2013 California Building Code Compliant*

Combined 2-Tier Maximum Trapeze Load (lbs/lf)	Max. Vertical Support Spacing (ft.)	Rod [1] Total Vertical Load (lbs)	Min. [8] Vertical Support Rod Dia. (in.)	TRANSVERSE BRACING REQUIREMENTS					LONGITUDINAL BRACING REQUIREMENTS				
				Max. [2] Brace Spacing (ft.)	Brace [3] Reaction P (lbs)	Min. Brace Assembly E -Pages	Min. Brace Anchorage [6] Form Pour [4] Deck Page D1	Min. Brace Anchorage [6] Metal [5] Deck Page D2	Max. [2] Brace Spacing (ft.)	Brace [3] Reaction P (lbs)	Min. Brace Assembly E -Pages	Min. Brace Anchorage [6] Form Pour [4] Deck Page D1	Min. Brace Anchorage [6] Metal [5] Deck Page D2
				2-Way Transverse Brace Pattern (B16.0)					6-Way Transverse, Longitudinal Brace Pattern (B16.1)				
11.0	10	97	3/8	40	110	C38AA04WS	N2	L2	80	143	C38AA04WS	N2	L2
25.0	10	219	1/2	40	250	C12AA04WS	N3	L3	80	325	C12AA04WS	N4	L4
35.0	10	307	1/2	40	350	C12AA04WS	N4	L4	80	455	C12AA04WS	N5	L5
50.0	10	439	5/8	40	500	C58AA04WS	N5	L5	80	650	C58AA04WS	N7	L7
65.0	10	570	3/4	40	650	C34CF04WS	N7	L7	80	845	C34DG06WS	N9	L9
75.0	10	658	3/4	36	675	C34DG06WS	N7	L7	72	878	C34DG06WS	N9	L9
100.0	10	878	3/4	27	675	C34DG06WS	N7	L7	54	878	C34DG06WS	N9	L9
125.0	10	1,097	3/4	22	688	C34DG06WS	N7	L7	44	894	C34DG06WS	N9	L9
150.0	10	1,316	3/4	19	713	C34DG06WS	N8	L8	38	926	C34DG06WS	N10	L10
175.0	10	1,536	3/4	16	700	C34DG06WS	N7	L7	32	910	C34DG06WS	N10	L10
200.0	10	1,755	3/4	14	700	C34DG06WS	N7	L7	28	910	C34DG06WS	N10	L10
225.0	10	1,974	3/4	13	731	C34DG06WS	N8	L8	26	951	C34DG06WS	N10	L10

1. TVL = DL + Fv + ($0.2S_{DS}$/1.4 x Wp). All Terms Are Working Loads. Based On Eccentric Loading, 65% Of Total Load Allocated Per Rod.
2. Reductions In Actual Installed Brace Spacing Will Result In An Equal Percentage Reduction In Brace Reaction. As An Option When This Occurs ISAT May Substitute An Alternate Anchorage From Tables D1 or D2 Which Meets or Exceeds The Lowered Brace Reaction.
3. At Max. 60 Degree Brace Inclination. Assumes 50% Of Total Trapeze Load Per Tier.
4. Min. 3,000 psi NWC. Any "N Series" Connection May Be Utilized Having A Numeric Designation Equal To Or Higher Than That Shown. A Numeric Designation Equal To Or Higher Than That Shown.
5. Min. 3,000 psi NWC or LWC. Any "L Series" Connection May Be Utilized Having A Numeric Designation Equal To Or Higher Than That Shown.
6. As An Alternate, Brace Anchorage Connections To Structure May Be Employed Using Any Detail From Structural Connections Section "D" Series Details Where Assembly Design Value Meets Or Exceeds Brace Reaction.
7. For Trade Specific Bracing Installation Notes, Refer To Page 8.1 or 10.1.
8. Utilize Any "G" Series Vertical Support Connection Having A Design Value Equal To Or Greater Than The Corresponding "Rod Total Vertical Load".

REVIEWED FOR CODE COMPLIANCE BY: OPM-0403 William Staehlin DATE: 01-26-2024 CALIFORNIA BUILDING CODE 2019

REGISTERED PROFESSIONAL ENGINEER MARCIN WASAZNIK S 6612 STRUCTURAL STATE OF CALIFORNIA

ISAT
A Division of Tomarco Contractor Specialties

International Seismic Application Technology
14848 Northam Street, La Mirada, CA 90638
877-999-4728 (Toll Free) 714-523-0845 (Fax)
www.isatsb.com

Rev. 1
03/12/19
Page
C16-0.25-60
2- Tier

CABLE BRACING REQUIREMENTS [7]:

2-TIERED TRAPEZE MOUNTED PIPING (Plumbing, Mechanical, Process, Medical Gas) — **MAXIMUM SEISMIC DESIGN FORCE = 0.50 G's**

Requires Use of ISAT Seismic Brackets. Use of Any Non-ISAT Bracket Voids Engineering. — *2013 California Building Code Compliant*

Combined 2-Tier Maximum Trapeze Load (lbs/lf)	Max. Vertical Support Spacing (ft.)	Rod [1] Total Vertical Load (lbs)	Min. [8] Vertical Support Rod Dia. (in.)	TRANSVERSE BRACING REQUIREMENTS					LONGITUDINAL BRACING REQUIREMENTS				
				Max. [2] Brace Spacing (ft.)	Brace [3] Reaction P (lbs)	Min. Brace Assembly E - Pages	Min. Brace Anchorage [6] Form Pour [4] Deck Page D1	Min. Brace Anchorage [6] Metal [5] Deck Page D2	Max. [2] Brace Spacing (ft.)	Brace [3] Reaction P (lbs)	Min. Brace Assembly E - Pages	Min. Brace Anchorage [6] Form Pour [4] Deck Page D1	Min. Brace Anchorage [6] Metal [5] Deck Page D2
				2-Way Transverse Brace Pattern (B16.0)					6-Way Transverse, Longitudinal Brace Pattern (B16.1)				
11.0	10	97	3/8	40	127	C38AA04WS	N2	L2	80	165	C38AA04WS	N2	L2
25.0	10	219	1/2	40	289	C12AA04WS	N3	L3	80	375	C12AA04WS	N4	L4
35.0	10	307	1/2	40	404	C12AA04WS	N5	L5	80	525	C12AA04WS	N6	L6
50.0	10	439	1/2	40	577	C12AA04WS	N6	L6	80	751	C12AA06WS	N8	L8
65.0	10	570	5/8	40	751	C58AA06WS	N8	L8	80	976	C58AA06WS	N10	L10
75.0	10	658	5/8	40	866	C58AA06WS	N9	L9	80	1,126	C58AA06WS	N12	L12
100.0	10	878	5/8	31	895	C58AA06WS	N9	L9	62	1,163	C58AA06WS	N12	L12
125.0	10	1,097	5/8	25	902	C58AA06WS	N10	L10	50	1,173	C58AA06WS	N12	L12
150.0	10	1,316	5/8	21	909	C58AA06WS	N10	L10	42	1,182	C58AA06WS	N12	L12
175.0	10	1,536	5/8	18	909	C58AA06WS	N10	L10	36	1,182	C58AA06WS	N12	L12
200.0	10	1,755	5/8	16	924	C58AA06WS	N10	L10	32	1,201	C58AA06WS	N13	L13
225.0	10	1,974	5/8	14	909	C58AA06WS	N10	L10	28	1,182	C58AA06WS	N12	L12

1. TVL = DL + Fv + ($0.2S_{DS}$/1.4 x Wp). All Terms Are Working Loads. Based On Eccentric Loading, 65% Of Total Load Allocated Per Rod.
2. Reductions In Actual Installed Brace Spacing Will Result In An Equal Percentage Reduction In Brace Reaction. As An Option When This Occurs ISAT May Substitute An Alternate Anchorage From Tables D1 or D2 Which Meets or Exceeds The Lowered Brace Reaction.
3. At Max. 30 Degree Brace Inclination. Assumes 50% Of Total Trapeze Load Per Tier.
4. Min. 3,000 psi NWC. Any "N Series" Connection May Be Utilized Having A Numeric Designation Equal To Or Higher Than That Shown. A Numeric Designation Equal To Or Higher Than That Shown.
5. Min. 3,000 psi NWC or LWC. Any "L Series" Connection May Be Utilized Having A Numeric Designation Equal To Or Higher Than That Shown.
6. As An Alternate, Brace Anchorage Connections To Structure May Be Employed Using Any Detail From Structural Connections Section "D" Series Details Where Assembly Design Value Meets Or Exceeds Brace Reaction.
7. For Trade Specific Bracing Installation Notes, Refer To Page 8.1 or 10.1.
8. Utilize Any "G" Series Vertical Support Connection Having A Design Value Equal To Or Greater Than The Corresponding "Rod Total Vertical Load".

REVIEWED FOR CODE COMPLIANCE BY: William Staehlin DATE: 01-26-2024 CALIFORNIA BUILDING CODE 2019

REGISTERED PROFESSIONAL ENGINEER MARCIN WASAZNIK S 6612 STRUCTURAL STATE OF CALIFORNIA

ISAT
A Division of Tomarco Contractor Specialties

International Seismic Application Technology
14848 Northam Street, La Mirada, CA 90638
877-999-4728 (Toll Free) 714-523-0845 (Fax)
www.isatsb.com

Rev. 1
03/12/19
Page
C16-0.5-30
2- Tier

CABLE BRACING REQUIREMENTS [7]:

2-TIERED TRAPEZE MOUNTED PIPING (Plumbing, Mechanical, Process, Medical Gas) — **MAXIMUM SEISMIC DESIGN FORCE = 0.50 G's**

Requires Use of ISAT Seismic Brackets. Use of Any Non-ISAT Bracket Voids Engineering. — *2013 California Building Code Compliant*

Combined 2-Tier Maximum Trapeze Load (lbs/lf)	Max. Vertical Support Spacing (ft.)	Rod [1] Total Vertical Load (lbs)	Min. [8] Vertical Support Rod Dia. (in.)	TRANSVERSE BRACING REQUIREMENTS					LONGITUDINAL BRACING REQUIREMENTS				
				Max. [2] Brace Spacing (ft.)	Brace [3] Reaction P (lbs)	Min. Brace Assembly E - Pages	Min. Brace Anchorage [6] Form Pour [4] Deck Page D1	Min. Brace Anchorage [6] Metal [5] Deck Page D2	Max. [2] Brace Spacing (ft.)	Brace [3] Reaction P (lbs)	Min. Brace Assembly E - Pages	Min. Brace Anchorage [6] Form Pour [4] Deck Page D1	Min. Brace Anchorage [6] Metal [5] Deck Page D2
				2-Way Transverse Brace Pattern (B16.0)					6-Way Transverse, Longitudinal Brace Pattern (B16.1)				
11.0	10	97	1/2	40	171	C12AA04WS	N2	L2	80	222	C12AA04WS	N3	L3
25.0	10	219	1/2	40	389	C12AA04WS	N4	L4	80	506	C12AA04WS	N6	L6
35.0	10	307	5/8	40	545	C58AA04WS	N6	L6	80	708	C58AA06WS	N8	L8
50.0	10	439	3/4	39	758	C34DG06WS	N8	L8	78	986	C34DG06WS	N10	L10
65.0	10	570	3/4	30	758	C34DG06WS	N8	L8	60	986	C34DG06WS	N10	L10
75.0	10	658	3/4	26	758	C34DG06WS	N8	L8	52	986	C34DG06WS	N10	L10
100.0	10	878	3/4	20	778	C34DG06WS	N8	L8	40	1,011	C34DG06WS	N11	L11
125.0	10	1,097	3/4	16	778	C34DG06WS	N8	L8	32	1,011	C34DG06WS	N11	L11
150.0	10	1,316	3/4	13	758	C34DG06WS	N8	L8	26	986	C34DG06WS	N10	L10
175.0	10	1,536	3/4	11	749	C34DG06WS	N8	L8	22	973	C34DG06WS	N10	L10
200.0	10	1,755	3/4	10	778	C34DG06WS	N8	L8	20	1,011	C34DG06WS	N11	L11

1. TVL = DL + Fv + ($0.2S_{DS}$/1.4 x Wp). All Terms Are Working Loads. Based On Eccentric Loading, 65% Of Total Load Allocated Per Rod.
2. Reductions In Actual Installed Brace Spacing Will Result In An Equal Percentage Reduction In Brace Reaction. As An Option When This Occurs ISAT May Substitute An Alternate Anchorage From Tables D1 or D2 Which Meets or Exceeds The Lowered Brace Reaction.
3. At Max. 50 Degree Brace Inclination. Assumes 50% Of Total Trapeze Load Per Tier.
4. Min. 3,000 psi NWC. Any "N Series" Connection May Be Utilized Having A Numeric Designation Equal To Or Higher Than That Shown. A Numeric Designation Equal To Or Higher Than That Shown.
5. Min. 3,000 psi NWC or LWC. Any "L Series" Connection May Be Utilized Having A Numeric Designation Equal To Or Higher Than That Shown.
6. As An Alternate, Brace Anchorage Connections To Structure May Be Employed Using Any Detail From Structural Connections Section "D" Series Details Where Assembly Design Value Meets Or Exceeds Brace Reaction.
7. For Trade Specific Bracing Installation Notes, Refer To Page 8.1 or 10.1.
8. Utilize Any "G" Series Vertical Support Connection Having A Design Value Equal To Or Greater Than The Corresponding "Rod Total Vertical Load".

REVIEWED FOR CODE COMPLIANCE
OPM-0403
BY: William Staehlin
DATE: 01-26-2024
CALIFORNIA BUILDING CODE

REGISTERED PROFESSIONAL ENGINEER
MARCIN WASAZNIK
S 6612
STRUCTURAL
STATE OF CALIFORNIA

ISAT
A Division of Tomarco Contractor Specialties

International Seismic Application Technology
14848 Northam Street, La Mirada, CA 90638
877-999-4728 (Toll Free) 714-523-0845 (Fax)
www.isatsb.com

Rev. 1
03/12/19
Page
C16-0.5-45
2- Tier

CABLE BRACING REQUIREMENTS [7]:

2-TIERED TRAPEZE MOUNTED PIPING (Plumbing, Mechanical, Process, Medical Gas) — **MAXIMUM SEISMIC DESIGN FORCE = 0.50 G's**

Requires Use of ISAT Seismic Brackets. Use of Any Non-ISAT Bracket Voids Engineering. — *2013 California Building Code Compliant*

Combined 2-Tier Maximum Trapeze Load (lbs/lf)	Max. Vertical Support Spacing (ft.)	Rod [1] Total Vertical Load (lbs)	Min. [8] Vertical Support Rod Dia. (in.)	TRANSVERSE BRACING REQUIREMENTS					LONGITUDINAL BRACING REQUIREMENTS				
				Max. [2] Brace Spacing (ft.)	Brace [3] Reaction P (lbs)	Min. Brace Assembly E -Pages	Min. Brace Anchorage [6] Form Pour [4] Deck Page D1	Min. Brace Anchorage [6] Metal [5] Deck Page D2	Max. [2] Brace Spacing (ft.)	Brace [3] Reaction P (lbs)	Min. Brace Assembly E -Pages	Min. Brace Anchorage [6] Form Pour [4] Deck Page D1	Min. Brace Anchorage [6] Metal [5] Deck Page D2
				2-Way Transverse Brace Pattern (B16.0)					6-Way Transverse, Longitudinal Brace Pattern (B16.1)				
11.0	10	97	1/2	40	220	C12AA04WS	N3	L3	80	286	C12AA04WS	N3	L3
25.0	10	219	3/4	40	500	C34CF04WS	N5	L5	80	650	C34CF04WS	N7	L7
35.0	10	307	3/4	38	665	C34CF04WS	N7	L7	76	865	C34DG06WS	N9	L9
50.0	10	439	3/4	27	675	C34DG06WS	N7	L7	54	878	C34DG06WS	N9	L9
65.0	10	570	3/4	21	683	C34DG06WS	N7	L7	42	887	C34DG06WS	N9	L9
75.0	10	658	3/4	18	675	C34DG06WS	N7	L7	36	878	C34DG06WS	N9	L9
100.0	10	878	3/4	13	650	C34CF04WS	N7	L7	26	845	C34DG06WS	N9	L9
125.0	10	1,097	3/4	11	688	C34DG06WS	N7	L7	22	894	C34DG06WS	N9	L9

1. TVL = DL + Fv + ($0.2S_{DS}$/1.4 x Wp). All Terms Are Working Loads. Based On Eccentric Loading, 65% Of Total Load Allocated Per Rod.
2. Reductions In Actual Installed Brace Spacing Will Result In An Equal Percentage Reduction In Brace Reaction. As An Option When This Occurs ISAT May Substitute An Alternate Anchorage From Tables D1 or D2 Which Meets or Exceeds The Lowered Brace Reaction.
3. At Max. 60 Degree Brace Inclination. Assumes 50% Of Total Trapeze Load Per Tier.
4. Min. 3,000 psi NWC. Any "N Series" Connection May Be Utilized Having A Numeric Designation Equal To Or Higher Than That Shown. A Numeric Designation Equal To Or Higher Than That Shown.
5. Min. 3,000 psi NWC or LWC. Any "L Series" Connection May Be Utilized Having A Numeric Designation Equal To Or Higher Than That Shown.
6. As An Alternate, Brace Anchorage Connections To Structure May Be Employed Using Any Detail From Structural Connections Section "D" Series Details Where Assembly Design Value Meets Or Exceeds Brace Reaction.
7. For Trade Specific Bracing Installation Notes, Refer To Page 8.1 or 10.1.
8. Utilize Any "G" Series Vertical Support Connection Having A Design Value Equal To Or Greater Than The Corresponding "Rod Total Vertical Load".

REVIEWED FOR CODE COMPLIANCE
BY: William Staehlin
DATE: 01-26-2024
CALIFORNIA BUILDING CODE, 2022

REGISTERED PROFESSIONAL ENGINEER
MARCIN WASAZNIK
S 6612
STRUCTURAL
STATE OF CALIFORNIA

ISAT
A Division of Tomarco Contractor Specialties
International Seismic Application Technology
14848 Northam Street, La Mirada, CA 90638
877-999-4728 (Toll Free) 714-523-0845 (Fax)
www.isatsb.com

Rev.1
03/12/19
Page
C16-0.5-60
2- Tier

CABLE BRACING REQUIREMENTS [7] :

2-TIERED TRAPEZE MOUNTED PIPING (Plumbing, Mechanical, Process, Medical Gas) — **MAXIMUM SEISMIC DESIGN FORCE = 0.75 G's**

Requires Use of ISAT Seismic Brackets. Use of Any Non-ISAT Bracket Voids Engineering. — *2013 California Building Code Compliant*

Combined 2-Tier Maximum Trapeze Load (lbs/lf)	Max. Vertical Support Spacing (ft.)	Rod [1] Total Vertical Load (lbs)	Min. [8] Vertical Support Rod Dia. (in.)	TRANSVERSE BRACING REQUIREMENTS: Max. [2] Brace Spacing (ft.)	Brace [3] Reaction P (lbs)	Min. Brace Assembly E - Pages	Min. Brace Anchorage [6]: Form Pour [4] Deck Page D1	Metal [5] Deck Page D2	LONGITUDINAL BRACING REQUIREMENTS: Max. [2] Brace Spacing (ft.)	Brace [3] Reaction P (lbs)	Min. Brace Assembly E - Pages	Min. Brace Anchorage [6]: Form Pour [4] Deck Page D1	Metal [5] Deck Page D2
				2-Way Transverse Brace Pattern (B16.0)					6-Way Transverse, Longitudinal Brace Pattern (B16.1)				
11.0	10	97	3/8	40	191	C38AA04WS	N2	L2	80	248	C38AA04WS	N3	L3
25.0	10	219	1/2	40	433	C12AA04WS	N5	L5	80	563	C12AA04WS	N6	L6
35.0	10	307	1/2	40	606	C12AA04WS	N7	L7	80	788	C12AA06WS	N8	L8
50.0	10	439	5/8	40	866	C58AA06WS	N9	L9	80	1,126	C58AA06WS	N12	L12
65.0	10	570	3/4	32	901	C34DG06WS	N10	L10	64	1,171	C34DG06WS	N12	L12
75.0	10	658	3/4	28	909	C34DG06WS	N10	L10	56	1,182	C34DG06WS	N12	L12
100.0	10	878	3/4	21	909	C34DG06WS	N10	L10	42	1,182	C34DG06WS	N12	L12
125.0	10	1,097	3/4	17	920	C34DG06WS	N10	L10	34	1,196	C34DG06WS	N12	L12
150.0	10	1,316	5/8	14	909	C58AA06WS	N10	L10	28	1,182	C58AA06WS	N12	L12
175.0	10	1,536	5/8	12	909	C58AA06WS	N10	L10	24	1,182	C58AA06WS	N12	L12
200.0	10	1,755	5/8	10	866	C58AA06WS	N9	L9	20	1,126	C58AA06WS	N12	L12

1. TVL = DL + Fv + ($0.2S_{DS}$/1.4 x Wp). All Terms Are Working Loads. Based On Eccentric Loading, 65% Of Total Load Allocated Per Rod.
2. Reductions In Actual Installed Brace Spacing Will Result In An Equal Percentage Reduction In Brace Reaction. As An Option When This Occurs ISAT May Substitute An Alternate Anchorage From Tables D1 or D2 Which Meets or Exceeds The Lowered Brace Reaction.
3. At Max. 30 Degree Brace Inclination. Assumes 50% Of Total Trapeze Load Per Tier.
4. Min. 3,000 psi NWC. Any "N Series" Connection May Be Utilized Having A Numeric Designation Equal To Or Higher Than That Shown. A Numeric Designation Equal To Or Higher Than That Shown.
5. Min. 3,000 psi NWC or LWC. Any "L Series" Connection May Be Utilized Having A Numeric Designation Equal To Or Higher Than That Shown.
6. As An Alternate, Brace Anchorage Connections To Structure May Be Employed Using Any Detail From Structural Connections Section "D" Series Details Where Assembly Design Value Meets Or Exceeds Brace Reaction.
7. For Trade Specific Bracing Installation Notes, Refer To Page 8.1 or 10.1.
8. Utilize Any "G" Series Vertical Support Connection Having A Design Value Equal To Or Greater Than The Corresponding "Rod Total Vertical Load".

REVIEWED FOR CODE COMPLIANCE BY William Staehlin DATE: 01-26-2024 CALIFORNIA BUILDING CODE 2022

REGISTERED PROFESSIONAL ENGINEER MARCIN WASAZNIK S 6612 STRUCTURAL STATE OF CALIFORNIA

ISAT
A Division of Tomarco Contractor Specialties
International Seismic Application Technology
14848 Northam Street, La Mirada, CA 90638
877-999-4728 (Toll Free) 714-523-0845 (Fax)
www.isatsb.com

Rev. 1
03/12/19
Page
C16-0.75-30
2- Tier

CABLE BRACING REQUIREMENTS [7]:

2-TIERED TRAPEZE MOUNTED PIPING (Plumbing, Mechanical, Process, Medical Gas) — **MAXIMUM SEISMIC DESIGN FORCE = 0.75 G's**

Requires Use of ISAT Seismic Brackets. Use of Any Non-ISAT Bracket Voids Engineering. — *2013 California Building Code Compliant*

Combined 2-Tier Maximum Trapeze Load (lbs/lf)	Max. Vertical Support Spacing (ft.)	Rod [1] Total Vertical Load (lbs)	Min. [8] Vertical Support Rod Dia. (in.)	TRANSVERSE BRACING REQUIREMENTS					LONGITUDINAL BRACING REQUIREMENTS				
				Max. [2] Brace Spacing (ft.)	Brace [3] Reaction P (lbs)	Min. Brace Assembly E - Pages	Min. Brace Anchorage [6] Form Pour [4] Deck Page D1	Min. Brace Anchorage [6] Metal [5] Deck Page D2	Max. [2] Brace Spacing (ft.)	Brace [3] Reaction P (lbs)	Min. Brace Assembly E - Pages	Min. Brace Anchorage [6] Form Pour [4] Deck Page D1	Min. Brace Anchorage [6] Metal [5] Deck Page D2
				2-Way Transverse Brace Pattern (B16.0)					6-Way Transverse, Longitudinal Brace Pattern (B16.1)				
11.0	10	97	1/2	40	257	C12AA04WS	N3	L3	80	334	C12AA04WS	N4	L4
25.0	10	219	3/4	40	583	C34CF04WS	N6	L6	80	758	C34DG06WS	N8	L8
35.0	10	307	3/4	37	755	C34DG06WS	N8	L8	74	982	C34DG06WS	N10	L10
50.0	10	439	3/4	26	758	C34DG06WS	N8	L8	52	986	C34DG06WS	N10	L10
65.0	10	570	3/4	20	758	C34DG06WS	N8	L8	40	986	C34DG06WS	N10	L10
75.0	10	658	3/4	17	744	C34DG06WS	N8	L8	34	967	C34DG06WS	N10	L10
100.0	10	878	3/4	13	758	C34DG06WS	N8	L8	26	986	C34DG06WS	N10	L10
125.0	10	1,097	3/4	10	729	C34DG06WS	N8	L8	20	948	C34DG06WS	N10	L10

1. TVL = DL + Fv + ($0.2S_{DS}$/1.4 x Wp). All Terms Are Working Loads. Based On Eccentric Loading, 65% Of Total Load Allocated Per Rod.
2. Reductions In Actual Installed Brace Spacing Will Result In An Equal Percentage Reduction In Brace Reaction. As An Option When This Occurs ISAT May Substitute An Alternate Anchorage From Tables D1 or D2 Which Meets or Exceeds The Lowered Brace Reaction.
3. At Max. 50 Degree Brace Inclination. Assumes 50% Of Total Trapeze Load Per Tier.
4. Min. 3,000 psi NWC. Any "N Series" Connection May Be Utilized Having A Numeric Designation Equal To Or Higher Than That Shown. A Numeric Designation Equal To Or Higher Than That Shown.
5. Min. 3,000 psi NWC or LWC. Any "L Series" Connection May Be Utilized Having A Numeric Designation Equal To Or Higher Than That Shown.
6. As An Alternate, Brace Anchorage Connections To Structure May Be Employed Using Any Detail From Structural Connections Section "D" Series Details Where Assembly Design Value Meets Or Exceeds Brace Reaction.
7. For Trade Specific Bracing Installation Notes, Refer To Page 8.1 or 10.1.
8. Utilize Any "G" Series Vertical Support Connection Having A Design Value Equal To Or Greater Than The Corresponding "Rod Total Vertical Load".

REVIEWED FOR CODE COMPLIANCE
BY: William Staehlin
DATE: 01-26-2024
CALIFORNIA BUILDING CODE, 2022

REGISTERED PROFESSIONAL ENGINEER
MARCIN WASAZNIK
S 6612
STRUCTURAL
STATE OF CALIFORNIA

ISAT
A Division of Tomarco Contractor Specialties
International Seismic Application Technology
14848 Northam Street, La Mirada, CA 90638
877-999-4728 (Toll Free) 714-523-0845 (Fax)
www.isatsb.com

Rev. 1
03/12/19
Page
C16-0.75-45
2- Tier

CABLE BRACING REQUIREMENTS [7]:

2-TIERED TRAPEZE MOUNTED PIPING (Plumbing, Mechanical, Process, Medical Gas) — **MAXIMUM SEISMIC DESIGN FORCE = 0.75 G's**

Requires Use of ISAT Seismic Brackets. Use of Any Non-ISAT Bracket Voids Engineering. — *2013 California Building Code Compliant*

Combined 2-Tier Maximum Trapeze Load (lbs/lf)	Max. Vertical Support Spacing (ft.)	Rod [1] Total Vertical Load (lbs)	Min. [8] Vertical Support Rod Dia. (in.)	TRANSVERSE BRACING REQUIREMENTS					LONGITUDINAL BRACING REQUIREMENTS				
				Max. [2] Brace Spacing (ft.)	Brace [3] Reaction P (lbs)	Min. Brace Assembly E -Pages	Min. Brace Anchorage [6] Form Pour [4] Deck Page D1	Min. Brace Anchorage [6] Metal [5] Deck Page D2	Max. [2] Brace Spacing (ft.)	Brace [3] Reaction P (lbs)	Min. Brace Assembly E -Pages	Min. Brace Anchorage [6] Form Pour [4] Deck Page D1	Min. Brace Anchorage [6] Metal [5] Deck Page D2
				2-Way Transverse Brace Pattern (B16.0)					6-Way Transverse, Longitudinal Brace Pattern (B16.1)				
11.0	10	97	1/2	40	330	C12AA04WS	N4	L4	80	429	C12AA04WS	N5	L5
25.0	10	219	3/4	35	656	C34CF04WS	N7	L7	70	853	C34DG06WS	N9	L9
35.0	10	307	3/4	25	656	C34CF04WS	N7	L7	50	853	C34DG06WS	N9	L9
50.0	10	439	3/4	18	675	C34DG06WS	N7	L7	36	878	C34DG06WS	N9	L9
65.0	10	570	3/4	14	683	C34DG06WS	N7	L7	28	887	C34DG06WS	N9	L9
75.0	10	658	3/4	12	675	C34DG06WS	N7	L7	24	878	C34DG06WS	N9	L9

1. TVL = DL + Fv + ($0.2S_{DS}$/1.4 x Wp). All Terms Are Working Loads. Based On Eccentric Loading, 65% Of Total Load Allocated Per Rod.
2. Reductions In Actual Installed Brace Spacing Will Result In An Equal Percentage Reduction In Brace Reaction. As An Option When This Occurs ISAT May Substitute An Alternate Anchorage From Tables D1 or D2 Which Meets or Exceeds The Lowered Brace Reaction.
3. At Max. 60 Degree Brace Inclination. Assumes 50% Of Total Trapeze Load Per Tier.
4. Min. 3,000 psi NWC. Any "N Series" Connection May Be Utilized Having A Numeric Designation Equal To Or Higher Than That Shown. A Numeric Designation Equal To Or Higher Than That Shown.
5. Min. 3,000 psi NWC or LWC. Any "L Series" Connection May Be Utilized Having A Numeric Designation Equal To Or Higher Than That Shown.
6. As An Alternate, Brace Anchorage Connections To Structure May Be Employed Using Any Detail From Structural Connections Section "D" Series Details Where Assembly Design Value Meets Or Exceeds Brace Reaction.
7. For Trade Specific Bracing Installation Notes, Refer To Page 8.1 or 10.1.
8. Utilize Any "G" Series Vertical Support Connection Having A Design Value Equal To Or Greater Than The Corresponding "Rod Total Vertical Load".

REVIEWED FOR CODE COMPLIANCE
OPM-0403
BY: William Staehlin
DATE: 01-26-2024
CALIFORNIA BUILDING CODE, 2022

REGISTERED PROFESSIONAL ENGINEER MARCIN WASAZNIK S 6612 STRUCTURAL STATE OF CALIFORNIA

ISAT
A Division of Tomarco Contractor Specialties
International Seismic Application Technology
14848 Northam Street, La Mirada, CA 90638
877-999-4728 (Toll Free) 714-523-0845 (Fax)
www.isatsb.com

Rev. 1
03/12/19
Page
C16-0.75-60
2- Tier

CABLE BRACING REQUIREMENTS [7]:

2-TIERED TRAPEZE MOUNTED PIPING (Plumbing, Mechanical, Process, Medical Gas) — **MAXIMUM SEISMIC DESIGN FORCE = 1.00 G's**

Requires Use of ISAT Seismic Brackets. Use of Any Non-ISAT Bracket Voids Engineering. — *2013 California Building Code Compliant*

Combined 2-Tier Maximum Trapeze Load (lbs/lf)	Max. Vertical Support Spacing (ft.)	Rod [1] Total Vertical Load (lbs)	Min. [8] Vertical Support Rod Dia. (in.)	TRANSVERSE BRACING REQUIREMENTS					LONGITUDINAL BRACING REQUIREMENTS				
				Max. [2] Brace Spacing (ft.)	Brace [3] Reaction P (lbs)	Min. Brace Assembly E - Pages	Min. Brace Anchorage [6] Form Pour [4] Deck Page D1	Min. Brace Anchorage [6] Metal [5] Deck Page D2	Max. [2] Brace Spacing (ft.)	Brace [3] Reaction P (lbs)	Min. Brace Assembly E - Pages	Min. Brace Anchorage [6] Form Pour [4] Deck Page D1	Min. Brace Anchorage [6] Metal [5] Deck Page D2
				2-Way Transverse Brace Pattern (B16.0)					6-Way Transverse, Longitudinal Brace Pattern (B16.1)				
11.0	10	97	1/2	40	254	C12AA04WS	N3	L3	80	330	C12AA04WS	N4	L4
25.0	10	219	1/2	40	577	C12AA04WS	N6	L6	80	751	C12AA06WS	N8	L8
35.0	10	307	5/8	40	808	C58AA06WS	N9	L9	80	1,051	C58AA06WS	N11	L11
50.0	10	439	3/4	31	895	C34DG06WS	N9	L9	62	1,163	C34DG06WS	N12	L12
65.0	10	570	3/4	24	901	C34DG06WS	N10	L10	48	1,171	C34DG06WS	N12	L12
75.0	10	658	3/4	21	909	C34DG06WS	N10	L10	42	1,182	C34DG06WS	N12	L12
100.0	10	878	5/8	15	866	C58AA06WS	N9	L9	30	1,126	C58AA06WS	N12	L12
125.0	10	1,097	5/8	12	866	C58AA06WS	N9	L9	24	1,126	C58AA06WS	N12	L12
150.0	10	1,316	5/8	10	866	C58AA06WS	N9	L9	20	1,126	C58AA06WS	N12	L12

1. TVL = DL + Fv + ($0.2S_{DS}$/1.4 x Wp). All Terms Are Working Loads. Based On Eccentric Loading, 65% Of Total Load Allocated Per Rod.
2. Reductions In Actual Installed Brace Spacing Will Result In An Equal Percentage Reduction In Brace Reaction. As An Option When This Occurs ISAT May Substitute An Alternate Anchorage From Tables D1 or D2 Which Meets or Exceeds The Lowered Brace Reaction.
3. At Max. 30 Degree Brace Inclination. Assumes 50% Of Total Trapeze Load Per Tier.
4. Min. 3,000 psi NWC. Any "N Series" Connection May Be Utilized Having A Numeric Designation Equal To Or Higher Than That Shown.
   A Numeric Designation Equal To Or Higher Than That Shown.
5. Min. 3,000 psi NWC or LWC. Any "L Series" Connection May Be Utilized Having A Numeric Designation Equal To Or Higher Than That Shown.
6. As An Alternate, Brace Anchorage Connections To Structure May Be Employed Using Any Detail From Structural Connections Section "D" Series Details Where Assembly Design Value Meets Or Exceeds Brace Reaction.
7. For Trade Specific Bracing Installation Notes, Refer To Page 8.1 or 10.1.
8. Utilize Any "G" Series Vertical Support Connection Having A Design Value Equal To Or Greater Than The Corresponding "Rod Total Vertical Load".

REVIEWED FOR CODE COMPLIANCE
OPM-0403
BY: William Staehlin
DATE: 01-26-2024
CALIFORNIA BUILDING CODE, 2022

REGISTERED PROFESSIONAL ENGINEER
NARCIN WASAZNIK
S-6612
STRUCTURAL
STATE OF CALIFORNIA

ISAT
A Division of Tomarco Contractor Specialties
International Seismic Application Technology
14848 Northam Street, La Mirada, CA 90638
877-999-4728 (Toll Free) 714-523-0845 (Fax)
www.isatsb.com

Rev. 1
03/12/19
Page
C16-1-30
2- Tier

CABLE BRACING REQUIREMENTS [7]:

2-TIERED TRAPEZE MOUNTED PIPING (Plumbing, Mechanical, Process, Medical Gas) — **MAXIMUM SEISMIC DESIGN FORCE = 1.00 G's**

Requires Use of ISAT Seismic Brackets. Use of Any Non-ISAT Bracket Voids Engineering. — *2013 California Building Code Compliant*

Combined 2-Tier Maximum Trapeze Load (lbs/lf)	Max. Vertical Support Spacing (ft.)	Rod [1] Total Vertical Load (lbs)	Min. [8] Vertical Support Rod Dia. (in.)	TRANSVERSE BRACING REQUIREMENTS					LONGITUDINAL BRACING REQUIREMENTS				
				Max. [2] Brace Spacing (ft.)	Brace [3] Reaction P (lbs)	Min. Brace Assembly E - Pages	Min. Brace Anchorage [6] Form Pour [4] Deck Page D1	Min. Brace Anchorage [6] Metal [5] Deck Page D2	Max. [2] Brace Spacing (ft.)	Brace [3] Reaction P (lbs)	Min. Brace Assembly E - Pages	Min. Brace Anchorage [6] Form Pour [4] Deck Page D1	Min. Brace Anchorage [6] Metal [5] Deck Page D2
				2-Way Transverse Brace Pattern (B16.0)					6-Way Transverse, Longitudinal Brace Pattern (B16.1)				
11.0	10	97	1/2	40	342	C12AA04WS	N4	L4	80	445	C12AA04WS	N5	L5
25.0	10	219	3/4	39	758	C34DG06WS	N8	L8	78	986	C34DG06WS	N10	L10
35.0	10	307	3/4	28	762	C34DG06WS	N8	L8	56	991	C34DG06WS	N10	L10
50.0	10	439	3/4	19	739	C34DG06WS	N8	L8	38	961	C34DG06WS	N10	L10
65.0	10	570	3/4	15	758	C34DG06WS	N8	L8	30	986	C34DG06WS	N10	L10
75.0	10	658	3/4	13	758	C34DG06WS	N8	L8	26	986	C34DG06WS	N10	L10
100.0	10	878	3/4	10	778	C34DG06WS	N8	L8	20	1,011	C34DG06WS	N11	L11

1. TVL = DL + Fv + ($0.2S_{DS}$/1.4 x Wp). All Terms Are Working Loads. Based On Eccentric Loading, 65% Of Total Load Allocated Per Rod.
2. Reductions In Actual Installed Brace Spacing Will Result In An Equal Percentage Reduction In Brace Reaction. As An Option When This Occurs ISAT May Substitute An Alternate Anchorage From Tables D1 or D2 Which Meets or Exceeds The Lowered Brace Reaction.
3. At Max. 50 Degree Brace Inclination. Assumes 50% Of Total Trapeze Load Per Tier.
4. Min. 3,000 psi NWC. Any "N Series" Connection May Be Utilized Having A Numeric Designation Equal To Or Higher Than That Shown. A Numeric Designation Equal To Or Higher Than That Shown.
5. Min. 3,000 psi NWC or LWC. Any "L Series" Connection May Be Utilized Having A Numeric Designation Equal To Or Higher Than That Shown.
6. As An Alternate, Brace Anchorage Connections To Structure May Be Employed Using Any Detail From Structural Connections Section "D" Series Details Where Assembly Design Value Meets Or Exceeds Brace Reaction.
7. For Trade Specific Bracing Installation Notes, Refer To Page 8.1 or 10.1.
8. Utilize Any "G" Series Vertical Support Connection Having A Design Value Equal To Or Greater Than The Corresponding "Rod Total Vertical Load".

REVIEWED FOR CODE COMPLIANCE
OPM-0403
BY: William Staehlin
DATE: 01-26-2024
CALIFORNIA BUILDING CODE, 2022

REGISTERED PROFESSIONAL ENGINEER MARCIN WASAZNIK S-6612 STRUCTURAL STATE OF CALIFORNIA

ISAT
A Division of Tomarco Contractor Specialties
International Seismic Application Technology
14848 Northam Street, La Mirada, CA 90638
877-999-4728 (Toll Free) 714-523-0845 (Fax)
www.isatsb.com

Rev. 1
03/12/19
Page
C16-1-45
2- Tier

CABLE BRACING REQUIREMENTS [7]:

2-TIERED TRAPEZE MOUNTED PIPING (Plumbing, Mechanical, Process, Medical Gas) — **MAXIMUM SEISMIC DESIGN FORCE = 1.00 G's**

Requires Use of ISAT Seismic Brackets. Use of Any Non-ISAT Bracket Voids Engineering. — *2013 California Building Code Compliant*

Combined 2-Tier Maximum Trapeze Load (lbs/lf)	Max. Vertical Support Spacing (ft.)	Rod [1] Total Vertical Load (lbs)	Min. [8] Vertical Support Rod Dia. (in.)	TRANSVERSE BRACING REQUIREMENTS					LONGITUDINAL BRACING REQUIREMENTS				
				Max. [2] Brace Spacing (ft.)	Brace [3] Reaction P (lbs)	Min. Brace Assembly E -Pages	Min. Brace Anchorage [6] Form Pour [4] Deck Page D1	Min. Brace Anchorage [6] Metal [5] Deck Page D2	Max. [2] Brace Spacing (ft.)	Brace [3] Reaction P (lbs)	Min. Brace Assembly E -Pages	Min. Brace Anchorage [6] Form Pour [4] Deck Page D1	Min. Brace Anchorage [6] Metal [5] Deck Page D2
				2-Way Transverse Brace Pattern (B16.0)					6-Way Transverse, Longitudinal Brace Pattern (B16.1)				
11.0	10	97	5/8	40	440	C58AA04WS	N5	L5	80	572	C58AA04WS	N6	L6
25.0	10	219	3/4	26	650	C34CF04WS	N7	L7	52	845	C34DG06WS	N9	L9
35.0	10	307	3/4	19	665	C34CF04WS	N7	L7	38	865	C34DG06WS	N9	L9
50.0	10	439	3/4	13	650	C34CF04WS	N7	L7	26	845	C34DG06WS	N9	L9
65.0	10	570	3/4	10	650	C34CF04WS	N7	L7	20	845	C34DG06WS	N9	L9

1. TVL = DL + Fv + ($0.2S_{DS}$/1.4 x Wp). All Terms Are Working Loads. Based On Eccentric Loading, 65% Of Total Load Allocated Per Rod.
2. Reductions In Actual Installed Brace Spacing Will Result In An Equal Percentage Reduction In Brace Reaction. As An Option When This Occurs ISAT May Substitute An Alternate Anchorage From Tables D1 or D2 Which Meets or Exceeds The Lowered Brace Reaction.
3. At Max. 60 Degree Brace Inclination. Assumes 50% Of Total Trapeze Load Per Tier.
4. Min. 3,000 psi NWC. Any "N Series" Connection May Be Utilized Having A Numeric Designation Equal To Or Higher Than That Shown. A Numeric Designation Equal To Or Higher Than That Shown.
5. Min. 3,000 psi NWC or LWC. Any "L Series" Connection May Be Utilized Having A Numeric Designation Equal To Or Higher Than That Shown.
6. As An Alternate, Brace Anchorage Connections To Structure May Be Employed Using Any Detail From Structural Connections Section "D" Series Details Where Assembly Design Value Meets Or Exceeds Brace Reaction.
7. For Trade Specific Bracing Installation Notes, Refer To Page 8.1 or 10.1.
8. Utilize Any "G" Series Vertical Support Connection Having A Design Value Equal To Or Greater Than The Corresponding "Rod Total Vertical Load".

REVIEWED FOR CODE COMPLIANCE
HCAI
OPM-0406
BY: William Staehlin
DATE: 01-26-2024
CALIFORNIA BUILDING CODE 2022

REGISTERED PROFESSIONAL ENGINEER
MARCIN WASAZNIK
S-6612
STRUCTURAL
STATE OF CALIFORNIA

ISAT
A Division of Tomarco Contractor Specialties
International Seismic Application Technology
14848 Northam Street, La Mirada, CA 90638
877-999-4728 (Toll Free) 714-523-0845 (Fax)
www.isatsb.com

Rev. 1
03/12/19
Page
C16-1-60
2- Tier

4-WAY SPLAYED RIGID BRACING REQUIREMENTS [7]:

TRAPEZE MOUNTED PIPING (Plumbing, Mechanical, Process, Medical Gas) ***MAXIMUM SEISMIC DESIGN FORCE = 0.25 G's***

Requires Use of ISAT Seismic Brackets. Use of Any Non-ISAT Bracket Voids Engineering. 2013 California Building Code Compliant

Maximum Trapeze Load (lbs/lf)	Max. Vertical Support Spacing (ft.)	Rod [1] Total Vertical Load (lbs)	Min. [8] Vertical Support Rod Dia. (in.)	4-WAY SPLAYED RIGID BRACING REQUIREMENTS				
				Max. [2] Brace Spacing (ft.)	Brace [3] Reaction P (lbs)	Min. Brace Assembly E - Pages	Min. Brace Anchorage [6] Form Pour [4] Deck Page D1	Min. Brace Anchorage [6] Metal [5] Deck Page D2
				4-Way Splayed Brace Pattern (B11.4)				
11.0	10	149	3/8	40	90	R38AAEM306	N1	L1
25.0	10	338	1/2	40	204	R12AAEM306	N3	L3
35.0	10	473	1/2	40	286	R12AAEM306	N3	L3
50.0	10	675	1/2	40	408	R12AAEM406	N5	L5
65.0	10	878	1/2	40	531	R12AAEM406	N6	L6
75.0	10	1,013	1/2	40	612	R12AAEM406	N7	L7
100.0	10	1,351	1/2	40	816	R12AAEM506	N9	L9
125.0	10	1,689	5/8	40	1,021	R58AAEM506	N11	L11
150.0	10	1,991	5/8	38	1,164	R58AAEM506	N12	L12
175.0	10	2,198	5/8	32	1,143	R58AAEM506	N12	L12
200.0	10	2,323	5/8	24	980	R58AAEM506	N10	L10
225.0	10	2,507	3/4	20	919	R34DGB1P06	N10	L10

1. TVL = DL + Fv + ($0.2S_{DS}$/1.4 x Wp). All Terms Are Working Loads. Based On Eccentric Loading. 65% Of Total Load Allocated Per Rod.
2. Reductions In Actual Installed Brace Spacing Will Result In An Equal Percentage Reduction In Brace Reaction. As An Option When This Occurs ISAT May Substitute An Alternate Anchorage From Tables D1 or D2 Which Meets or Exceeds The Lowered Brace Reaction.
3. At Max. 30 Degree Brace Inclination.
4. Min. 3,000 psi NWC. Any "N Series" Connection May Be Utilized Having A Numeric Designation Equal To Or Higher Than That Shown.
5. Min. 3,000 psi NWC or LWC. Any "L Series" Connection May Be Utilized Having A Numeric Designation Equal To Or Higher Than That Shown.
6. As An Alternate, Brace Anchorage Connections To Structure May Be Employed Using Any Detail From Structural Connections Section "D" Series Details Where Assembly Design Value Meets Or Exceeds Brace Reaction.
7. For Trade Specific Bracing Installation Notes, Refer To Page 8.1 or 10.1.
8. Utilize Any "G" Series Vertical Support Connection Having A Design Value Equal To Or Greater Than The Corresponding "Rod Total Vertical Load".

REVIEWED FOR CODE COMPLIANCE
HCAi
OPM-0403
BY: William Staehlin
DATE: 01-26-2024
CALIFORNIA BUILDING CODE

REGISTERED PROFESSIONAL ENGINEER MARCIN WASAZNIK S-6612 STRUCTURAL STATE OF CALIFORNIA

ISAT
A Division of Tomarco Contractor Specialties
International Seismic Application Technology
14848 Northam Street, La Mirada, CA 90638
877-999-4728 (Toll Free) 714-523-0845 (Fax)
www.isatsb.com

Rev.1
11/19/18
Page
C17-0.25-30

4-WAY SPLAYED RIGID BRACING REQUIREMENTS [7]:

TRAPEZE MOUNTED PIPING (Plumbing, Mechanical, Process, Medical Gas) ***MAXIMUM SEISMIC DESIGN FORCE = 0.25 G's***

Requires Use of ISAT Seismic Brackets. Use of Any Non-ISAT Bracket Voids Engineering. 2013 California Building Code Compliant

Maximum Trapeze Load (lbs/lf)	Max. Vertical Support Spacing (ft.)	Rod [1] Total Vertical Load (lbs)	Min. [8] Vertical Support Rod Dia. (in.)	4-WAY SPLAYED RIGID BRACING REQUIREMENTS				
				Max. [2] Brace Spacing (ft.)	Brace [3] Reaction P (lbs)	Min. Brace Assembly E - Pages	Min. Brace Anchorage [6] Form Pour [4] Deck Page D1	Min. Brace Anchorage [6] Metal [5] Deck Page D2
				4-Way Splayed Brace Pattern (B11.4)				
11.0	10	204	3/8	40	121	R38AAEM306	N2	L2
25.0	10	464	1/2	40	275	R12AAEM306	N3	L3
35.0	10	649	1/2	40	385	R12AAEM406	N4	L4
50.0	10	927	1/2	40	550	R12AAEM406	N6	L6
65.0	10	1,206	1/2	40	715	R12AAEM509	N8	L8
75.0	10	1,391	1/2	40	825	R12AAEM506	N9	L9
100.0	10	1,855	5/8	40	1,100	R58AAEM506	N12	L12
125.0	10	2,319	5/8	40	1,375	R58AAEM506	N14	L14
150.0	10	2,782	3/4	40	1,650	R34CFB2P12	N17	L17
175.0	10	3,246	3/4	40	1,925	R34DGB2P09	N20	L20
200.0	10	3,465	3/4	35	1,925	R34DGB2P09	N20	L20
225.0	10	3,459	3/4	27	1,671	R34CFB2P09	N17	L17

1. TVL = DL + Fv + ($0.2S_{DS}$/1.4 x Wp). All Terms Are Working Loads. Based On Eccentric Loading. 65% Of Total Load Allocated Per Rod.
2. Reductions In Actual Installed Brace Spacing Will Result In An Equal Percentage Reduction In Brace Reaction. As An Option When This Occurs ISAT May Substitute An Alternate Anchorage From Tables D1 or D2 Which Meets or Exceeds The Lowered Brace Reaction.
3. At Max. 50 Degree Brace Inclination.
4. Min. 3,000 psi NWC. Any "N Series" Connection May Be Utilized Having A Numeric Designation Equal To Or Higher Than That Shown.
5. Min. 3,000 psi NWC or LWC. Any "L Series" Connection May Be Utilized Having A Numeric Designation Equal To Or Higher Than That Shown.
6. As An Alternate, Brace Anchorage Connections To Structure May Be Employed Using Any Detail From Structural Connections Section "D" Series Details Where Assembly Design Value Meets Or Exceeds Brace Reaction.
7. For Trade Specific Bracing Installation Notes, Refer To Page 8.1 or 10.1
8. Utilize Any "G" Series Vertical Support Connection Having A Design Value Equal To Or Greater Than The Corresponding "Rod Total Vertical Load".

REVIEWED FOR CODE COMPLIANCE
HCAi
OPM-0403
BY: William Staehlin
DATE: 01-26-2024
CALIFORNIA BUILDING CODE

REGISTERED PROFESSIONAL ENGINEER MARCIN WASAZNIK S-6612 STRUCTURAL STATE OF CALIFORNIA

ISAT
A Division of Tomarco Contractor Specialties
International Seismic Application Technology
14848 Northam Street, La Mirada, CA 90638
877-999-4728 (Toll Free) 714-523-0845 (Fax)
www.isatsb.com

Rev.1
11/19/18
Page
C17-0.25-45

4-WAY SPLAYED RIGID BRACING REQUIREMENTS [7]:

TRAPEZE MOUNTED PIPING (Plumbing, Mechanical, Process, Medical Gas) ***MAXIMUM SEISMIC DESIGN FORCE = 0.25 G's***

Requires Use of ISAT Seismic Brackets. Use of Any Non-ISAT Bracket Voids Engineering. 2013 California Building Code Compliant

Maximum Trapeze Load (lbs/lf)	Max. Vertical Support Spacing (ft.)	Rod [1] Total Vertical Load (lbs)	Min. [8] Vertical Support Rod Dia. (in.)	4-WAY SPLAYED RIGID BRACING REQUIREMENTS				
				Max. [2] Brace Spacing (ft.)	Brace [3] Reaction P (lbs)	Min. Brace Assembly E - Pages	Min. Brace Anchorage [6] Form Pour [4] Deck Page D1	Min. Brace Anchorage [6] Metal [5] Deck Page D2
				4-Way Splayed Brace Pattern (B11.4)				
11.0	10	253	3/8	40	156	R38AAEM306	N2	L2
25.0	10	574	1/2	40	354	R12AAEM406	N4	L4
35.0	10	804	1/2	40	495	R12AAEM406	N5	L5
50.0	10	1,149	1/2	40	707	R12AAEM509	N8	L8
65.0	10	1,494	5/8	40	919	R58AAEM506	N10	L10
75.0	10	1,723	5/8	40	1,061	R58AAEM506	N11	L11
100.0	10	2,298	5/8	40	1,414	R58AAEM506	N15	L15
125.0	10	2,473	3/4	31	1,370	R34DGB1S06	N14	L14
150.0	10	2,701	3/4	26	1,379	R34DGB1S06	N14	L14
175.0	10	2,903	3/4	22	1,361	R34DGB1S06	N14	L14
200.0	10	3,104	3/4	19	1,344	R34DGB1S06	N14	L14
225.0	10	3,333	3/4	17	1,352	R34DGB1S06	N14	L14

1. TVL = DL + Fv + ($0.2S_{DS}$/1.4 x Wp). All Terms Are Working Loads. Based On Eccentric Loading. 65% Of Total Load Allocated Per Rod.
2. Reductions In Actual Installed Brace Spacing Will Result In An Equal Percentage Reduction In Brace Reaction. As An Option When This Occurs ISAT May Substitute An Alternate Anchorage From Tables D1 or D2 Which Meets or Exceeds The Lowered Brace Reaction.
3. At Max. 60 Degree Brace Inclination.
4. Min. 3,000 psi NWC. Any "N Series" Connection May Be Utilized Having A Numeric Designation Equal To Or Higher Than That Shown.
5. Min. 3,000 psi NWC or LWC. Any "L Series" Connection May Be Utilized Having A Numeric Designation Equal To Or Higher Than That Shown.
6. As An Alternate, Brace Anchorage Connections To Structure May Be Employed Using Any Detail From Structural Connections Section "D" Series Details Where Assembly Design Value Meets Or Exceeds Brace Reaction.
7. For Trade Specific Bracing Installation Notes, Refer To Page 8.1 or 10.1
8. Utilize Any "G" Series Vertical Support Connection Having A Design Value Equal To Or Greater Than The Corresponding "Rod Total Vertical Load".

REVIEWED FOR CODE COMPLIANCE
HCAi
OPM-0403
BY: William Staehlin
DATE: 01-26-2024
CALIFORNIA BUILDING CODE

REGISTERED PROFESSIONAL ENGINEER
MARCIN WASAZNIK
S 6612
STRUCTURAL
STATE OF CALIFORNIA

ISAT
International Seismic Application Technology
14848 Northam Street, La Mirada, CA 90638
877-999-4728 (Toll Free) 714-523-0845 (Fax)
www.isatsb.com
A Division of Tomarco Contractor Specialties

Rev.1
11/19/18
Page
C17-0.25-60

4-WAY SPLAYED RIGID BRACING REQUIREMENTS [7]:

TRAPEZE MOUNTED PIPING (Plumbing, Mechanical, Process, Medical Gas) ***MAXIMUM SEISMIC DESIGN FORCE = 0.50 G's***

Requires Use of ISAT Seismic Brackets. Use of Any Non-ISAT Bracket Voids Engineering. 2013 California Building Code Compliant

Maximum Trapeze Load (lbs/lf)	Max. Vertical Support Spacing (ft.)	Rod [1] Total Vertical Load (lbs)	Min. [8] Vertical Support Rod Dia. (in.)	4-WAY SPLAYED RIGID BRACING REQUIREMENTS				
				Max. [2] Brace Spacing (ft.)	Brace [3] Reaction P (lbs)	Min. Brace Assembly E - Pages	Min. Brace Anchorage [6] Form Pour [4] Deck Page D1	Min. Brace Anchorage [6] Metal [5] Deck Page D2
				4-Way Splayed Brace Pattern (B11.4)				
11.0	10	201	3/8	40	180	R38AAEM306	N2	L2
25.0	10	456	1/2	40	408	R12AAEM406	N5	L5
35.0	10	639	1/2	40	572	R12AAEM406	N6	L6
50.0	10	912	1/2	40	816	R12AAEM506	N9	L9
65.0	10	1,186	1/2	40	1,061	R12AAEM506	N11	L11
75.0	10	1,333	1/2	38	1,164	R12AAEM506	N12	L12
100.0	10	1,564	5/8	29	1,184	R58AAEM506	N12	L12
125.0	10	1,777	5/8	23	1,174	R58AAEM506	N12	L12
150.0	10	1,991	5/8	19	1,164	R58AAEM506	N12	L12
175.0	10	2,198	5/8	16	1,143	R58AAEM506	N12	L12
200.0	10	2,323	5/8	12	980	R58AAEM506	N10	L10
225.0	10	2,507	3/4	10	919	R34DGB1P06	N10	L10

1. TVL = DL + Fv + ($0.2S_{DS}$/1.4 x Wp). All Terms Are Working Loads. Based On Eccentric Loading. 65% Of Total Load Allocated Per Rod.
2. Reductions In Actual Installed Brace Spacing Will Result In An Equal Percentage Reduction In Brace Reaction. As An Option When This Occurs ISAT May Substitute An Alternate Anchorage From Tables D1 or D2 Which Meets or Exceeds The Lowered Brace Reaction.
3. At Max. 30 Degree Brace Inclination.
4. Min. 3,000 psi NWC. Any "N Series" Connection May Be Utilized Having A Numeric Designation Equal To Or Higher Than That Shown.
5. Min. 3,000 psi NWC or LWC. Any "L Series" Connection May Be Utilized Having A Numeric Designation Equal To Or Higher Than That Shown.
6. As An Alternate, Brace Anchorage Connections To Structure May Be Employed Using Any Detail From Structural Connections Section "D" Series Details Where Assembly Design Value Meets Or Exceeds Brace Reaction.
7. For Trade Specific Bracing Installation Notes, Refer To Page 8.1 or 10.1.
8. Utilize Any "G" Series Vertical Support Connection Having A Design Value Equal To Or Greater Than The Corresponding "Rod Total Vertical Load".

REVIEWED FOR CODE COMPLIANCE
HCAi
OPM-0403
BY: William Staehlin
DATE: 01-26-2024
CALIFORNIA BUILDING CODE 2019

REGISTERED PROFESSIONAL ENGINEER
MARCIN WASAZNIK
S 6612
STRUCTURAL
STATE OF CALIFORNIA

ISAT
A Division of Tomarco Contractor Specialties
International Seismic Application Technology
14848 Northam Street, La Mirada, CA 90638
877-999-4728 (Toll Free) 714-523-0845 (Fax)
www.isatsb.com

Rev.1
11/19/18
Page
C17-0.5-30

4-WAY SPLAYED RIGID BRACING REQUIREMENTS [7]:

TRAPEZE MOUNTED PIPING (Plumbing, Mechanical, Process, Medical Gas) ***MAXIMUM SEISMIC DESIGN FORCE = 0.50 G's***

Requires Use of ISAT Seismic Brackets. Use of Any Non-ISAT Bracket Voids Engineering. 2013 California Building Code Compliant

Maximum Trapeze Load (lbs/lf)	Max. Vertical Support Spacing (ft.)	Rod [1] Total Vertical Load (lbs)	Min. [8] Vertical Support Rod Dia. (in.)	4-WAY SPLAYED RIGID BRACING REQUIREMENTS				
				Max. [2] Brace Spacing (ft.)	Brace [3] Reaction P (lbs)	Min. Brace Assembly E - Pages	Min. Brace Anchorage [6] Form Pour [4] Deck Page D1	Min. Brace Anchorage [6] Metal [5] Deck Page D2
				4-Way Splayed Brace Pattern (B11.4)				
11.0	10	312	3/8	40	242	R38AAEM306	N3	L3
25.0	10	708	1/2	40	550	R12AAEM406	N6	L6
35.0	10	991	1/2	40	770	R12AAEM509	N8	L8
50.0	10	1,416	1/2	40	1,100	R12AAEM506	N12	L12
65.0	10	1,841	5/8	40	1,430	R58AAEM506	N15	L15
75.0	10	2,124	3/4	40	1,650	R34CFB2P12	N17	L17
100.0	10	2,832	3/4	40	2,200	R34DGB2P09	N23	L23
125.0	10	3,051	3/4	32	2,200	R34DGB2P09	N23	L23
150.0	10	3,295	3/4	27	2,228	R34DGB2P09	N23	L23
175.0	10	3,417	3/4	22	2,118	R34DGB2P09	N22	L22
200.0	10	3,416	3/4	17	1,870	R34DGB2P09	N19	L19
225.0	10	3,404	3/4	13	1,609	R34CFB2P12	N17	L17

1. TVL = DL + Fv + ($0.2S_{DS}$/1.4 x Wp). All Terms Are Working Loads. Based On Eccentric Loading. 65% Of Total Load Allocated Per Rod.
2. Reductions In Actual Installed Brace Spacing Will Result In An Equal Percentage Reduction In Brace Reaction. As An Option When This Occurs ISAT May Substitute An Alternate Anchorage From Tables D1 or D2 Which Meets or Exceeds The Lowered Brace Reaction.
3. At Max. 50 Degree Brace Inclination.
4. Min. 3,000 psi NWC. Any "N Series" Connection May Be Utilized Having A Numeric Designation Equal To Or Higher Than That Shown.
5. Min. 3,000 psi NWC or LWC. Any "L Series" Connection May Be Utilized Having A Numeric Designation Equal To Or Higher Than That Shown.
6. As An Alternate, Brace Anchorage Connections To Structure May Be Employed Using Any Detail From Structural Connections Section "D" Series Details Where Assembly Design Value Meets Or Exceeds Brace Reaction.
7. For Trade Specific Bracing Installation Notes, Refer To Page 8.1 or 10.1
8. Utilize Any "G" Series Vertical Support Connection Having A Design Value Equal To Or Greater Than The Corresponding "Rod Total Vertical Load".

REVIEWED FOR CODE COMPLIANCE
OPM-0403
BY: William Staehlin
DATE: 01-26-2024
CALIFORNIA BUILDING CODE

REGISTERED PROFESSIONAL ENGINEER
MARCIN WASAZNIK
5-6612
STRUCTURAL
STATE OF CALIFORNIA

ISAT
A Division of Tomarco Contractor Specialties
International Seismic Application Technology
14848 Northam Street, La Mirada, CA 90638
877-999-4728 (Toll Free) 714-523-0845 (Fax)
www.isatsb.com

Rev.1
11/19/18
Page
C17-0.5-45

4-WAY SPLAYED RIGID BRACING REQUIREMENTS [7] :

TRAPEZE MOUNTED PIPING (Plumbing, Mechanical, Process, Medical Gas) ***MAXIMUM SEISMIC DESIGN FORCE = 0.50 G's***

Requires Use of ISAT Seismic Brackets. Use of Any Non-ISAT Bracket Voids Engineering. 2013 California Building Code Compliant

Maximum Trapeze Load (lbs/lf)	Max. Vertical Support Spacing (ft.)	Rod [1] Total Vertical Load (lbs)	Min. [8] Vertical Support Rod Dia. (in.)	4-WAY SPLAYED RIGID BRACING REQUIREMENTS				
				Max. [2] Brace Spacing (ft.)	Brace [3] Reaction P (lbs)	Min. Brace Assembly E - Pages	Min. Brace Anchorage [6] Form Pour [4] Deck Page D1	Min. Brace Anchorage [6] Metal [5] Deck Page D2
				4-Way Splayed Brace Pattern (B11.4)				
11.0	10	409	3/8	40	311	R38AAEM409	N4	L4
25.0	10	930	1/2	40	707	R12AAEM509	N8	L8
35.0	10	1,301	1/2	40	990	R12AAEM506	N10	L10
50.0	10	1,859	5/8	40	1,414	R58AAEM506	N15	L15
65.0	10	2,001	5/8	31	1,425	R58AAEM506	N15	L15
75.0	10	2,096	5/8	27	1,432	R58AAEM506	N15	L15
100.0	10	2,298	5/8	20	1,414	R58AAEM506	N15	L15
125.0	10	2,428	3/4	15	1,326	R34DGB1S06	N14	L14
150.0	10	2,701	3/4	13	1,379	R34DGB1S06	N14	L14
175.0	10	2,903	3/4	11	1,361	R34DGB1S06	N14	L14

1. TVL = DL + Fv + ($0.2S_{DS}$/1.4 x Wp). All Terms Are Working Loads. Based On Eccentric Loading. 65% Of Total Load Allocated Per Rod.
2. Reductions In Actual Installed Brace Spacing Will Result In An Equal Percentage Reduction In Brace Reaction. As An Option When This Occurs ISAT May Substitute An Alternate Anchorage From Tables D1 or D2 Which Meets or Exceeds The Lowered Brace Reaction.
3. At Max. 60 Degree Brace Inclination.
4. Min. 3,000 psi NWC. Any "N Series" Connection May Be Utilized Having A Numeric Designation Equal To Or Higher Than That Shown.
5. Min. 3,000 psi NWC or LWC. Any "L Series" Connection May Be Utilized Having A Numeric Designation Equal To Or Higher Than That Shown.
6. As An Alternate, Brace Anchorage Connections To Structure May Be Employed Using Any Detail From Structural Connections Section "D" Series Details Where Assembly Design Value Meets Or Exceeds Brace Reaction.
7. For Trade Specific Bracing Installation Notes, Refer To Page 8.1 or 10.1
8. Utilize Any "G" Series Vertical Support Connection Having A Design Value Equal To Or Greater Than The Corresponding "Rod Total Vertical Load".

REVIEWED FOR CODE COMPLIANCE
HCAi
OPM-0403
BY: William Staehlin
DATE: 01-26-2024
CALIFORNIA BUILDING CODE

REGISTERED PROFESSIONAL ENGINEER
MARCIN WASAZNIK
S-6612
STRUCTURAL
STATE OF CALIFORNIA

ISAT
A Division of Tomarco Contractor Specialties
International Seismic Application Technology
14848 Northam Street, La Mirada, CA 90638
877-999-4728 (Toll Free) 714-523-0845 (Fax)
www.isatsb.com

Rev.1
11/19/18
Page
C17-0.5-60

4-WAY SPLAYED RIGID BRACING REQUIREMENTS [7] :

TRAPEZE MOUNTED PIPING (Plumbing, Mechanical, Process, Medical Gas) ***MAXIMUM SEISMIC DESIGN FORCE = 0.75 G's***

Requires Use of ISAT Seismic Brackets. Use of Any Non-ISAT Bracket Voids Engineering. 2013 California Building Code Compliant

Maximum Trapeze Load (lbs/lf)	Max. Vertical Support Spacing (ft.)	Rod [1] Total Vertical Load (lbs)	Min. [8] Vertical Support Rod Dia. (in.)	4-WAY SPLAYED RIGID BRACING REQUIREMENTS				
				Max. [2] Brace Spacing (ft.)	Brace [3] Reaction P (lbs)	Min. Brace Assembly E - Pages	Min. Brace Anchorage [6] Form Pour [4] Deck Page D1	Min. Brace Anchorage [6] Metal [5] Deck Page D2
				4-Way Splayed Brace Pattern (B11.4)				
11.0	10	253	3/8	40	269	R38AAEM306	N3	L3
25.0	10	574	1/2	40	612	R12AAEM406	N7	L7
35.0	10	804	1/2	40	857	R12AAEM506	N9	L9
50.0	10	1,113	1/2	38	1,164	R12AAEM506	N12	L12
65.0	10	1,240	1/2	29	1,154	R12AAEM506	N12	L12
75.0	10	1,324	1/2	25	1,148	R12AAEM506	N12	L12
100.0	10	1,552	5/8	19	1,164	R58AAEM506	N12	L12
125.0	10	1,763	5/8	15	1,148	R58AAEM506	N12	L12
150.0	10	1,955	5/8	12	1,102	R58AAEM506	N12	L12
175.0	10	2,219	5/8	11	1,179	R58AAEM506	N12	L12

1. TVL = DL + Fv + ($0.2S_{DS}$/1.4 x Wp). All Terms Are Working Loads. Based On Eccentric Loading. 65% Of Total Load Allocated Per Rod.
2. Reductions In Actual Installed Brace Spacing Will Result In An Equal Percentage Reduction In Brace Reaction. As An Option When This Occurs ISAT May Substitute An Alternate Anchorage From Tables D1 or D2 Which Meets or Exceeds The Lowered Brace Reaction.
3. At Max. 30 Degree Brace Inclination.
4. Min. 3,000 psi NWC. Any "N Series" Connection May Be Utilized Having A Numeric Designation Equal To Or Higher Than That Shown.
5. Min. 3,000 psi NWC or LWC. Any "L Series" Connection May Be Utilized Having A Numeric Designation Equal To Or Higher Than That Shown.
6. As An Alternate, Brace Anchorage Connections To Structure May Be Employed Using Any Detail From Structural Connections Section "D" Series Details Where Assembly Design Value Meets Or Exceeds Brace Reaction.
7. For Trade Specific Bracing Installation Notes, Refer To Page 8.1 or 10.1.
8. Utilize Any "G" Series Vertical Support Connection Having A Design Value Equal To Or Greater Than The Corresponding "Rod Total Vertical Load".

REVIEWED FOR CODE COMPLIANCE
HCAi
OPM-0403
BY: William Staehlin
DATE: 01-26-2024
CALIFORNIA BUILDING CODE, INC.

REGISTERED PROFESSIONAL ENGINEER
MARCIN WASAZNIK
S-6612
STRUCTURAL
STATE OF CALIFORNIA

ISAT
A Division of Tomarco Contractor Specialties

International Seismic Application Technology
14848 Northam Street, La Mirada, CA 90638
877-999-4728 (Toll Free) 714-523-0845 (Fax)
www.isatsb.com

Rev.1
11/19/18
Page
C17-0.75-30

4-WAY SPLAYED RIGID BRACING REQUIREMENTS [7] :

TRAPEZE MOUNTED PIPING (Plumbing, Mechanical, Process, Medical Gas) ***MAXIMUM SEISMIC DESIGN FORCE = 0.75 G's***

Requires Use of ISAT Seismic Brackets. Use of Any Non-ISAT Bracket Voids Engineering. 2013 California Building Code Compliant

Maximum Trapeze Load (lbs/lf)	Max. Vertical Support Spacing (ft.)	Rod [1] Total Vertical Load (lbs)	Min. [8] Vertical Support Rod Dia. (in.)	4-WAY SPLAYED RIGID BRACING REQUIREMENTS				
				Max. [2] Brace Spacing (ft.)	Brace [3] Reaction P (lbs)	Min. Brace Assembly E - Pages	Min. Brace Anchorage [6] Form Pour [4] Deck Page D1	Min. Brace Anchorage [6] Metal [5] Deck Page D2
				4-Way Splayed Brace Pattern (B11.4)				
11.0	10	419	3/8	40	363	R38AAEM406	N4	L4
25.0	10	952	1/2	40	825	R12AAEM506	N9	L9
35.0	10	1,333	5/8	40	1,155	R58AAEM506	N12	L12
50.0	10	1,905	3/4	40	1,650	R34CFB2P12	N17	L17
65.0	10	2,476	3/4	40	2,145	R34DGB2P09	N22	L22
75.0	10	2,582	3/4	35	2,166	R34DGB2P09	N22	L22
100.0	10	2,857	3/4	27	2,228	R34DGB2P09	N23	L23
125.0	10	3,021	3/4	21	2,166	R34DGB2P09	N22	L22
150.0	10	3,295	3/4	18	2,228	R34DGB2P09	N23	L23
175.0	10	3,460	3/4	15	2,166	R34DGB2P09	N22	L22
200.0	10	3,368	3/4	11	1,815	R34DGB2P09	N19	L19

1. TVL = DL + Fv + ($0.2S_{DS}$/1.4 x Wp). All Terms Are Working Loads. Based On Eccentric Loading. 65% Of Total Load Allocated Per Rod.
2. Reductions In Actual Installed Brace Spacing Will Result In An Equal Percentage Reduction In Brace Reaction. As An Option When This Occurs ISAT May Substitute An Alternate Anchorage From Tables D1 or D2 Which Meets or Exceeds The Lowered Brace Reaction.
3. At Max. 50 Degree Brace Inclination.
4. Min. 3,000 psi NWC. Any "N Series" Connection May Be Utilized Having A Numeric Designation Equal To Or Higher Than That Shown.
5. Min. 3,000 psi NWC or LWC. Any "L Series" Connection May Be Utilized Having A Numeric Designation Equal To Or Higher Than That Shown.
6. As An Alternate, Brace Anchorage Connections To Structure May Be Employed Using Any Detail From Structural Connections Section "D" Series Details Where Assembly Design Value Meets Or Exceeds Brace Reaction.
7. For Trade Specific Bracing Installation Notes, Refer To Page 8.1 or 10.1
8. Utilize Any "G" Series Vertical Support Connection Having A Design Value Equal To Or Greater Than The Corresponding "Rod Total Vertical Load".

REVIEWED FOR CODE COMPLIANCE
HCAi
OPM-0403
BY: William Staehlin
DATE: 01-26-2024
CALIFORNIA BUILDING CODE

REGISTERED PROFESSIONAL ENGINEER
MARCIN WASAZNIK
S 6612
STRUCTURAL
STATE OF CALIFORNIA

ISAT
A Division of Tomarco Contractor Specialties

International Seismic Application Technology
14848 Northam Street, La Mirada, CA 90638
877-999-4728 (Toll Free) 714-523-0845 (Fax)
www.isatsb.com

Rev.1
11/19/18

4-WAY SPLAYED RIGID BRACING REQUIREMENTS [7] :

TRAPEZE MOUNTED PIPING (Plumbing, Mechanical, Process, Medical Gas) ***MAXIMUM SEISMIC DESIGN FORCE = 0.75 G's***

Requires Use of ISAT Seismic Brackets. Use of Any Non-ISAT Bracket Voids Engineering. 2013 California Building Code Compliant

Maximum Trapeze Load (lbs/lf)	Max. Vertical Support Spacing (ft.)	Rod [1] Total Vertical Load (lbs)	Min. [8] Vertical Support Rod Dia. (in.)	4-WAY SPLAYED RIGID BRACING REQUIREMENTS				
				Max. [2] Brace Spacing (ft.)	Brace [3] Reaction P (lbs)	Min. Brace Assembly E - Pages	Min. Brace Anchorage [6] Form Pour [4] Deck Page D1	Min. Brace Anchorage [6] Metal [5] Deck Page D2
				4-Way Splayed Brace Pattern (B11.4)				
11.0	10	565	1/2	40	467	R12AAEM406	N5	L5
25.0	10	1,285	5/8	40	1,061	R58AAEM506	N11	L11
35.0	10	1,649	5/8	36	1,336	R58AAEM506	N14	L14
50.0	10	1,824	5/8	26	1,379	R58AAEM506	N14	L14
65.0	10	1,955	5/8	20	1,379	R58AAEM506	N14	L14
75.0	10	2,096	5/8	18	1,432	R58AAEM506	N15	L15
100.0	10	2,262	5/8	13	1,379	R58AAEM506	N14	L14
125.0	10	2,428	3/4	10	1,326	R34DGB1S06	N14	L14

1. TVL = DL + Fv + ($0.2S_{DS}$/1.4 x Wp). All Terms Are Working Loads. Based On Eccentric Loading. 65% Of Total Load Allocated Per Rod.
2. Reductions In Actual Installed Brace Spacing Will Result In An Equal Percentage Reduction In Brace Reaction. As An Option When This Occurs ISAT May Substitute An Alternate Anchorage From Tables D1 or D2 Which Meets or Exceeds The Lowered Brace Reaction.
3. At Max. 60 Degree Brace Inclination.
4. Min. 3,000 psi NWC. Any "N Series" Connection May Be Utilized Having A Numeric Designation Equal To Or Higher Than That Shown.
5. Min. 3,000 psi NWC or LWC. Any "L Series" Connection May Be Utilized Having A Numeric Designation Equal To Or Higher Than That Shown.
6. As An Alternate, Brace Anchorage Connections To Structure May Be Employed Using Any Detail From Structural Connections Section "D" Series Details Where Assembly Design Value Meets Or Exceeds Brace Reaction.
7. For Trade Specific Bracing Installation Notes, Refer To Page 8.1 or 10.1
8. Utilize Any "G" Series Vertical Support Connection Having A Design Value Equal To Or Greater Than The Corresponding "Rod Total Vertical Load".

REVIEWED FOR CODE COMPLIANCE
HCAi
OPM-0403
BY: William Staehlin
DATE: 01-26-2024
CALIFORNIA BUILDING CODE, 2019

REGISTERED PROFESSIONAL ENGINEER MARCIN WASAZNIK S-6612 STRUCTURAL STATE OF CALIFORNIA

ISAT
A Division of Tomarco Contractor Specialties
International Seismic Application Technology
14848 Northam Street, La Mirada, CA 90638
877-999-4728 (Toll Free) 714-523-0845 (Fax)
www.isatsb.com

Rev.1
11/19/18
Page
C17-0.75-60

4-WAY SPLAYED RIGID BRACING REQUIREMENTS [7] :

TRAPEZE MOUNTED PIPING (Plumbing, Mechanical, Process, Medical Gas) ***MAXIMUM SEISMIC DESIGN FORCE = 1.00 G's***

Requires Use of ISAT Seismic Brackets. Use of Any Non-ISAT Bracket Voids Engineering. 2013 California Building Code Compliant

Maximum Trapeze Load (lbs/lf)	Max. Vertical Support Spacing (ft.)	Rod [1] Total Vertical Load (lbs)	Min. [8] Vertical Support Rod Dia. (in.)	4-WAY SPLAYED RIGID BRACING REQUIREMENTS				
				Max. [2] Brace Spacing (ft.)	Brace [3] Reaction P (lbs)	Min. Brace Assembly E - Pages	Min. Brace Anchorage [6] Form Pour [4] Deck Page D1	Min. Brace Anchorage [6] Metal [5] Deck Page D2
				4-Way Splayed Brace Pattern (B11.4)				
11.0	10	305	3/8	40	359	R38AAEM406	N4	L4
25.0	10	693	1/2	40	816	R12AAEM506	N9	L9
35.0	10	970	1/2	40	1,143	R12AAEM506	N12	L12
50.0	10	1,125	1/2	29	1,184	R12AAEM506	N12	L12
65.0	10	1,247	1/2	22	1,168	R12AAEM506	N12	L12
75.0	10	1,333	1/2	19	1,164	R12AAEM506	N12	L12
100.0	10	1,540	5/8	14	1,143	R58AAEM506	N12	L12
125.0	10	1,748	5/8	11	1,123	R58AAEM506	N12	L12
150.0	10	2,026	5/8	10	1,225	R58AAEM506	N13	L13

1. TVL = DL + Fv + ($0.2S_{DS}$/1.4 x Wp). All Terms Are Working Loads. Based On Eccentric Loading. 65% Of Total Load Allocated Per Rod.
2. Reductions In Actual Installed Brace Spacing Will Result In An Equal Percentage Reduction In Brace Reaction. As An Option When This Occurs ISAT May Substitute An Alternate Anchorage From Tables D1 or D2 Which Meets or Exceeds The Lowered Brace Reaction.
3. At Max. 30 Degree Brace Inclination.
4. Min. 3,000 psi NWC. Any "N Series" Connection May Be Utilized Having A Numeric Designation Equal To Or Higher Than That Shown.
5. Min. 3,000 psi NWC or LWC. Any "L Series" Connection May Be Utilized Having A Numeric Designation Equal To Or Higher Than That Shown.
6. As An Alternate, Brace Anchorage Connections To Structure May Be Employed Using Any Detail From Structural Connections Section "D" Series Details Where Assembly Design Value Meets Or Exceeds Brace Reaction.
7. For Trade Specific Bracing Installation Notes, Refer To Page 8.1 or 10.1.
8. Utilize Any "G" Series Vertical Support Connection Having A Design Value Equal To Or Greater Than The Corresponding "Rod Total Vertical Load".

REVIEWED FOR CODE COMPLIANCE
HCAi
OPM-0403
BY: William Staehlin
DATE: 01-26-2024
CALIFORNIA BUILDING CODE

REGISTERED PROFESSIONAL ENGINEER MARCIN WASAZNIK S-6612 STRUCTURAL STATE OF CALIFORNIA

ISAT
A Division of Tomarco Contractor Specialties
International Seismic Application Technology
14848 Northam Street, La Mirada, CA 90638
877-999-4728 (Toll Free) 714-523-0845 (Fax)
www.isatsb.com

Rev.1
11/19/18
Page
C17-1-30

4-WAY SPLAYED RIGID BRACING REQUIREMENTS [7] :

TRAPEZE MOUNTED PIPING (Plumbing, Mechanical, Process, Medical Gas) ***MAXIMUM SEISMIC DESIGN FORCE = 1.00 G's***

Requires Use of ISAT Seismic Brackets. Use of Any Non-ISAT Bracket Voids Engineering. 2013 California Building Code Compliant

Maximum Trapeze Load (lbs/lf)	Max. Vertical Support Spacing (ft.)	Rod [1] Total Vertical Load (lbs)	Min. [8] Vertical Support Rod Dia. (in.)	4-WAY SPLAYED RIGID BRACING REQUIREMENTS				
				Max. [2] Brace Spacing (ft.)	Brace [3] Reaction P (lbs)	Min. Brace Assembly E - Pages	Min. Brace Anchorage [6] Form Pour [4] Deck Page D1	Min. Brace Anchorage [6] Metal [5] Deck Page D2
				4-Way Splayed Brace Pattern (B11.4)				
11.0	10	527	1/2	40	484	R12AAEM406	N5	L5
25.0	10	1,197	1/2	40	1,100	R12AAEM506	N12	L12
35.0	10	1,675	5/8	40	1,540	R58AAEM606	N16	L16
50.0	10	2,345	3/4	39	2,145	R34DGB2P09	N22	L22
65.0	10	2,476	3/4	30	2,145	R34DGB2P09	N22	L22
75.0	10	2,564	3/4	26	2,145	R34DGB2P09	N22	L22
100.0	10	2,832	3/4	20	2,200	R34DGB2P09	N23	L23
125.0	10	3,051	3/4	16	2,200	R34DGB2P09	N23	L23
150.0	10	3,222	3/4	13	2,145	R34DGB2P09	N22	L22
175.0	10	3,417	3/4	11	2,118	R34DGB2P09	N22	L22

1. TVL = DL + Fv + ($0.2S_{DS}$/1.4 x Wp). All Terms Are Working Loads. Based On Eccentric Loading. 65% Of Total Load Allocated Per Rod.
2. Reductions In Actual Installed Brace Spacing Will Result In An Equal Percentage Reduction In Brace Reaction. As An Option When This Occurs ISAT May Substitute An Alternate Anchorage From Tables D1 or D2 Which Meets or Exceeds The Lowered Brace Reaction.
3. At Max. 50 Degree Brace Inclination.
4. Min. 3,000 psi NWC. Any "N Series" Connection May Be Utilized Having A Numeric Designation Equal To Or Higher Than That Shown.
5. Min. 3,000 psi NWC or LWC. Any "L Series" Connection May Be Utilized Having A Numeric Designation Equal To Or Higher Than That Shown.
6. As An Alternate, Brace Anchorage Connections To Structure May Be Employed Using Any Detail From Structural Connections Section "D" Series Details Where Assembly Design Value Meets Or Exceeds Brace Reaction.
7. For Trade Specific Bracing Installation Notes, Refer To Page 8.1 or 10.1
8. Utilize Any "G" Series Vertical Support Connection Having A Design Value Equal To Or Greater Than The Corresponding "Rod Total Vertical Load".

REVIEWED FOR CODE COMPLIANCE
HCAi
OPM-0403
BY: William Staehlin
DATE: 01-26-2024
CALIFORNIA BUILDING CODE, INC.

REGISTERED PROFESSIONAL ENGINEER MARCIN WASAZNIK S-6612 STRUCTURAL STATE OF CALIFORNIA

ISAT
A Division of Tomarco Contractor Specialties
International Seismic Application Technology
14848 Northam Street, La Mirada, CA 90638
877-999-4728 (Toll Free) 714-523-0845 (Fax)
www.isatsb.com

Rev.1
11/19/18
Page
C17-1-45

4-WAY SPLAYED RIGID BRACING REQUIREMENTS [7]:

TRAPEZE MOUNTED PIPING (Plumbing, Mechanical, Process, Medical Gas) ***MAXIMUM SEISMIC DESIGN FORCE = 1.00 G's***

Requires Use of ISAT Seismic Brackets. Use of Any Non-ISAT Bracket Voids Engineering. 2013 California Building Code Compliant

Maximum Trapeze Load (lbs/lf)	Max. Vertical Support Spacing (ft.)	Rod [1] Total Vertical Load (lbs)	Min. [8] Vertical Support Rod Dia. (in.)	4-WAY SPLAYED RIGID BRACING REQUIREMENTS				
				Max. [2] Brace Spacing (ft.)	Brace [3] Reaction P (lbs)	Min. Brace Assembly E - Pages	Min. Brace Anchorage [6] Form Pour [4] Deck Page D1	Min. Brace Anchorage [6] Metal [5] Deck Page D2
				4-Way Splayed Brace Pattern (B11.4)				
11.0	10	721	1/2	40	622	R12AAEM406	N7	L7
25.0	10	1,604	5/8	39	1,379	R58AAEM506	N14	L14
35.0	10	1,699	5/8	28	1,386	R58AAEM506	N14	L14
50.0	10	1,859	5/8	20	1,414	R58AAEM506	N15	L15
65.0	10	1,955	5/8	15	1,379	R58AAEM506	N14	L14
75.0	10	2,043	5/8	13	1,379	R58AAEM506	N14	L14
100.0	10	2,298	5/8	10	1,414	R58AAEM506	N15	L15

1. TVL = DL + Fv + ($0.2S_{DS}$/1.4 x Wp). All Terms Are Working Loads. Based On Eccentric Loading. 65% Of Total Load Allocated Per Rod.
2. Reductions In Actual Installed Brace Spacing Will Result In An Equal Percentage Reduction In Brace Reaction. As An Option When This Occurs ISAT May Substitute An Alternate Anchorage From Tables D1 or D2 Which Meets or Exceeds The Lowered Brace Reaction.
3. At Max. 60 Degree Brace Inclination.
4. Min. 3,000 psi NWC. Any "N Series" Connection May Be Utilized Having A Numeric Designation Equal To Or Higher Than That Shown.
5. Min. 3,000 psi NWC or LWC. Any "L Series" Connection May Be Utilized Having A Numeric Designation Equal To Or Higher Than That Shown.
6. As An Alternate, Brace Anchorage Connections To Structure May Be Employed Using Any Detail From Structural Connections Section "D" Series Details Where Assembly Design Value Meets Or Exceeds Brace Reaction.
7. For Trade Specific Bracing Installation Notes, Refer To Page 8.1 or 10.1
8. Utilize Any "G" Series Vertical Support Connection Having A Design Value Equal To Or Greater Than The Corresponding "Rod Total Vertical Load".

REVIEWED FOR CODE COMPLIANCE
HCAi
OPM-0403
BY: William Staehlin
DATE: 01-26-2024
CALIFORNIA BUILDING CODE, 2022

REGISTERED PROFESSIONAL ENGINEER MARCIN WASAZNIK S-6612 STRUCTURAL STATE OF CALIFORNIA

ISAT
A Division of Tomarco Contractor Specialties
International Seismic Application Technology
14848 Northam Street, La Mirada, CA 90638
877-999-4728 (Toll Free) 714-523-0845 (Fax)
www.isatsb.com

Rev.1
11/19/18
Page
C17-1-60

4-WAY SPLAYED RIGID BRACING REQUIREMENTS [7]:

2-TIERED TRAPEZE MOUNTED PIPING (Plumbing, Mechanical, Process, Medical Gas) — **MAXIMUM SEISMIC DESIGN FORCE = 0.25 G's**

Requires Use of ISAT Seismic Brackets. Use of Any Non-ISAT Bracket Voids Engineering. 2013 California Building Code Compliant

Combined 2-Tier Maximum Total Trapeze Load (lbs/lf)	Max. Vertical Support Spacing (ft.)	Rod [1] Total Vertical Load (lbs)	Min. [8] Vertical Support Rod Dia. (in.)	4-WAY SPLAYED RIGID BRACING REQUIREMENTS				
				Max. [2] Brace Spacing (ft.)	Brace [3] Reaction P (lbs)	Min. Brace Assembly E - Pages	Min. Brace Anchorage [6] Form Pour [4] Deck Page D1	Min. Brace Anchorage [6] Metal [5] Deck Page D2
				4-Way Splayed Brace Pattern (B12.4)				
11.0	10	149	3/8	40	45	R38AAEM306	N1	L1
25.0	10	338	1/2	40	102	R12AAEM306	N2	L2
35.0	10	473	1/2	40	143	R12AAEM306	N2	L2
50.0	10	675	1/2	40	204	R12AAEM306	N3	L3
65.0	10	878	1/2	40	265	R12AAEM306	N3	L3
75.0	10	1,013	1/2	40	306	R12AAEM409	N4	L4
100.0	10	1,351	1/2	40	408	R12AAEM406	N5	L5
125.0	10	1,689	5/8	40	510	R58AAEM406	N6	L6
150.0	10	2,026	5/8	40	612	R58AAEM406	N7	L7
175.0	10	2,364	3/4	40	714	R34CFB1P09	N8	L8
200.0	10	2,702	3/4	40	816	R34DGB1P09	N9	L9
225.0	10	3,040	3/4	40	919	R34DGB1P06	N10	L10

1. TVL = DL + Fv + ($0.2S_{DS}$/1.4 x Wp). All Terms Are Working Loads. Based On Eccentric Loading. 65% Of Total Load Allocated Per Rod.
2. Reductions In Actual Installed Brace Spacing Will Result In An Equal Percentage Reduction In Brace Reaction. As An Option When This Occurs ISAT May Substitute An Alternate Anchorage From Tables D1 or D2 Which Meets or Exceeds The Lowered Brace Reaction.
3. At Max. 30 Degree Brace Inclination. Assumes 50% Of Total Trapeze Load Per Tier.
4. Min. 3,000 psi NWC. Any "N Series" Connection May Be Utilized Having A Numeric Designation Equal To Or Higher Than That Shown.
5. Min. 3,000 psi NWC or LWC. Any "L Series" Connection May Be Utilized Having A Numeric Designation Equal To Or Higher Than That Shown.
6. As An Alternate, Brace Anchorage Connections To Structure May Be Employed Using Any Detail From Structural Connections Section "D" Series Details Where Assembly Design Value Meets Or Exceeds Brace Reaction.
7. For Trade Specific Bracing Installation Notes, Refer To Page 8.1 or 10.1.
8. Utilize Any "G" Series Vertical Support Connection Having A Design Value Equal To Or Greater Than The Corresponding "Rod Total Vertical Load".

REVIEWED FOR CODE COMPLIANCE HCAi OPM-0403 BY: William Staehlin DATE: 01-26-2024 CALIFORNIA BUILDING CODE

REGISTERED PROFESSIONAL ENGINEER MARCIN WASAZNIK S-6612 STRUCTURAL STATE OF CALIFORNIA

ISAT
A Division of Tomarco Contractor Specialties
International Seismic Application Technology
14848 Northam Street, La Mirada, CA 90638
877-999-4728 (Toll Free) 714-523-0845 (Fax)
www.isatsb.com

Rev. 1
11/19/18

4-WAY SPLAYED RIGID BRACING REQUIREMENTS [7] :

2-TIERED TRAPEZE MOUNTED PIPING (Plumbing, Mechanical, Process, Medical Gas) ***MAXIMUM SEISMIC DESIGN FORCE = 0.25 G's***

Requires Use of ISAT Seismic Brackets. Use of Any Non-ISAT Bracket Voids Engineering. 2013 California Building Code Compliant

Combined 2-Tier Maximum Total Trapeze Load (lbs/lf)	Max. Vertical Support Spacing (ft.)	Rod [1] Total Vertical Load (lbs)	Min. [8] Vertical Support Rod Dia. (in.)	4-WAY SPLAYED RIGID BRACING REQUIREMENTS				
				Max. [2] Brace Spacing (ft.)	Brace [3] Reaction P (lbs)	Min. Brace Assembly E - Pages	Min. Brace Anchorage [6] Form Pour [4] Deck Page D1	Min. Brace Anchorage [6] Metal [5] Deck Page D2
				4-Way Splayed Brace Pattern (B12.4)				
11.0	10	204	3/8	40	61	R38AAEM306	N1	L1
25.0	10	464	1/2	40	138	R12AAEM306	N2	L2
35.0	10	649	1/2	40	193	R12AAEM306	N2	L2
50.0	10	927	1/2	40	275	R12AAEM306	N3	L3
65.0	10	1,206	1/2	40	358	R12AAEM406	N4	L4
75.0	10	1,391	1/2	40	413	R12AAEM406	N5	L5
100.0	10	1,855	5/8	40	550	R58AAEM406	N6	L6
125.0	10	2,319	5/8	40	688	R58AAEM509	N7	L7
150.0	10	2,782	3/4	40	825	R34CFB1P09	N9	L9
175.0	10	3,246	3/4	40	963	R34CFB1P06	N10	L10
200.0	10	3,465	3/4	35	963	R34CFB1P06	N10	L10
225.0	10	3,404	3/4	26	804	R34CFB1P09	N9	L9

1. TVL = DL + Fv + ($0.2S_{DS}$/1.4 x Wp). All Terms Are Working Loads. Based On Eccentric Loading. 65% Of Total Load Allocated Per Rod.
2. Reductions In Actual Installed Brace Spacing Will Result In An Equal Percentage Reduction In Brace Reaction. As An Option When This Occurs ISAT May Substitute An Alternate Anchorage From Tables D1 or D2 Which Meets or Exceeds The Lowered Brace Reaction.
3. At Max. 50 Degree Brace Inclination. Assumes 50% Of Total Trapeze Load Per Tier.
4. Min. 3,000 psi NWC. Any "N Series" Connection May Be Utilized Having A Numeric Designation Equal To Or Higher Than That Shown.
5. Min. 3,000 psi NWC or LWC. Any "L Series" Connection May Be Utilized Having A Numeric Designation Equal To Or Higher Than That Shown.
6. As An Alternate, Brace Anchorage Connections To Structure May Be Employed Using Any Detail From Structural Connections Section "D" Series Details Where Assembly Design Value Meets Or Exceeds Brace Reaction.
7. For Trade Specific Bracing Installation Notes, Refer To Page 8.1 or 10.1.
8. Utilize Any "G" Series Vertical Support Connection Having A Design Value Equal To Or Greater Than The Corresponding "Rod Total Vertical Load".

REVIEWED FOR CODE COMPLIANCE BY: William Staehlin DATE: 01-26-2024 OPM-0403 CALIFORNIA BUILDING CODE

REGISTERED PROFESSIONAL ENGINEER MARCIN WASAZNIK S-6612 STRUCTURAL STATE OF CALIFORNIA

International Seismic Application Technology
14848 Northam Street, La Mirada, CA 90638
877-999-4728 (Toll Free) 714-523-0845 (Fax)
www.isatsb.com
A Division of Tomarco Contractor Specialties

Rev. 2

03/12/19

Page

C17-0.25-45

2-Tier

4-WAY SPLAYED RIGID BRACING REQUIREMENTS [7] :

2-TIERED TRAPEZE MOUNTED PIPING (Plumbing, Mechanical, Process, Medical Gas) **MAXIMUM SEISMIC DESIGN FORCE = 0.25 G's**

Requires Use of ISAT Seismic Brackets. Use of Any Non-ISAT Bracket Voids Engineering. 2013 California Building Code Compliant

Combined 2-Tier Maximum Total Trapeze Load (lbs/lf)	Max. Vertical Support Spacing (ft.)	Rod [1] Total Vertical Load (lbs)	Min. [8] Vertical Support Rod Dia. (in.)	4-WAY SPLAYED RIGID BRACING REQUIREMENTS				
				Max. [2] Brace Spacing (ft.)	Brace [3] Reaction P (lbs)	Min. Brace Assembly E - Pages	Min. Brace Anchorage [6] Form Pour [4] Deck Page D1	Min. Brace Anchorage [6] Metal [5] Deck Page D2
				4-Way Splayed Brace Pattern (B12.4)				
11.0	10	253	3/8	40	78	R38AAEM306	N1	L1
25.0	10	574	1/2	40	177	R12AAEM306	N2	L2
35.0	10	804	1/2	40	247	R12AAEM306	N3	L3
50.0	10	1,149	1/2	40	354	R12AAEM406	N4	L4
65.0	10	1,494	5/8	40	460	R58AAEM406	N5	L5
75.0	10	1,723	5/8	40	530	R58AAEM406	N6	L6
100.0	10	2,298	5/8	40	707	R58AAEM509	N8	L8
125.0	10	2,872	3/4	40	884	R34DGB1P09	N9	L9
150.0	10	3,340	3/4	38	1,008	R34DGB1P06	N11	L11
175.0	10	3,462	3/4	31	959	R34DGB1P06	N10	L10
200.0	10	3,459	3/4	24	849	R34CFB1P09	N9	L9
225.0	10	3,492	3/4	19	756	R34CFB1P09	N8	L8

1. TVL = DL + Fv + ($0.2S_{DS}$/1.4 x Wp). All Terms Are Working Loads. Based On Eccentric Loading. 65% Of Total Load Allocated Per Rod.
2. Reductions In Actual Installed Brace Spacing Will Result In An Equal Percentage Reduction In Brace Reaction. As An Option When This Occurs ISAT May Substitute An Alternate Anchorage From Tables D1 or D2 Which Meets or Exceeds The Lowered Brace Reaction.
3. At Max. 60 Degree Brace Inclination. Assumes 50% Of Total Trapeze Load Per Tier.
4. Min. 3,000 psi NWC. Any "N Series" Connection May Be Utilized Having A Numeric Designation Equal To Or Higher Than That Shown.
5. Min. 3,000 psi NWC or LWC. Any "L Series" Connection May Be Utilized Having A Numeric Designation Equal To Or Higher Than That Shown.
6. As An Alternate, Brace Anchorage Connections To Structure May Be Employed Using Any Detail From Structural Connections Section "D" Series Details Where Assembly Design Value Meets Or Exceeds Brace Reaction.
7. For Trade Specific Bracing Installation Notes, Refer To Page 8.1 or 10.1.
8. Utilize Any "G" Series Vertical Support Connection Having A Design Value Equal To Or Greater Than The Corresponding "Rod Total Vertical Load".

REVIEWED FOR CODE COMPLIANCE
HCAi
OPM-0403
BY: William Staehlin
DATE: 01-26-2024
CALIFORNIA BUILDING CODE 2022

REGISTERED PROFESSIONAL ENGINEER MARCIN WASAZNIK S-6612 STRUCTURAL STATE OF CALIFORNIA

ISAT
A Division of Tomarco Contractor Specialties
International Seismic Application Technology
14848 Northam Street, La Mirada, CA 90638
877-999-4728 (Toll Free) 714-523-0845 (Fax)
www.isatsb.com

Rev. 1
11/19/18
Page
C17-0.25-60
2-Tier

4-WAY SPLAYED RIGID BRACING REQUIREMENTS [7] :

2-TIERED TRAPEZE MOUNTED PIPING (Plumbing, Mechanical, Process, Medical Gas) ***MAXIMUM SEISMIC DESIGN FORCE = 0.50 G's***

Requires Use of ISAT Seismic Brackets. Use of Any Non-ISAT Bracket Voids Engineering. 2013 California Building Code Compliant

Combined 2-Tier Maximum Total Trapeze Load (lbs/lf)	Max. Vertical Support Spacing (ft.)	Rod [1] Total Vertical Load (lbs)	Min. [8] Vertical Support Rod Dia. (in.)	4-WAY SPLAYED RIGID BRACING REQUIREMENTS				
				Max. [2] Brace Spacing (ft.)	Brace [3] Reaction P (lbs)	Min. Brace Assembly E - Pages	Min. Brace Anchorage [6] Form Pour [4] Deck Page D1	Min. Brace Anchorage [6] Metal [5] Deck Page D2
				4-Way Splayed Brace Pattern (B12.4)				
11.0	10	201	3/8	40	90	R38AAEM306	N1	L1
25.0	10	456	1/2	40	204	R12AAEM306	N3	L3
35.0	10	639	1/2	40	286	R12AAEM306	N3	L3
50.0	10	912	1/2	40	408	R12AAEM406	N5	L5
65.0	10	1,186	1/2	40	531	R12AAEM406	N6	L6
75.0	10	1,368	1/2	40	612	R12AAEM406	N7	L7
100.0	10	1,824	5/8	40	816	R58AAEM506	N9	L9
125.0	10	2,281	5/8	40	1,021	R58AAEM506	N11	L11
150.0	10	2,453	3/4	32	980	R34DGB1P06	N10	L10
175.0	10	2,654	3/4	27	964	R34DGB1P06	N10	L10
200.0	10	2,891	3/4	24	980	R34DGB1P06	N10	L10
225.0	10	3,093	3/4	21	964	R34DGB1P06	N10	L10

1. TVL = DL + Fv + ($0.2S_{DS}$/1.4 x Wp). All Terms Are Working Loads. Based On Eccentric Loading. 65% Of Total Load Allocated Per Rod.
2. Reductions In Actual Installed Brace Spacing Will Result In An Equal Percentage Reduction In Brace Reaction. As An Option When This Occurs ISAT May Substitute An Alternate Anchorage From Tables D1 or D2 Which Meets or Exceeds The Lowered Brace Reaction.
3. At Max. 30 Degree Brace Inclination. Assumes 50% Of Total Trapeze Load Per Tier.
4. Min. 3,000 psi NWC. Any "N Series" Connection May Be Utilized Having A Numeric Designation Equal To Or Higher Than That Shown.
5. Min. 3,000 psi NWC or LWC. Any "L Series" Connection May Be Utilized Having A Numeric Designation Equal To Or Higher Than That Shown.
6. As An Alternate, Brace Anchorage Connections To Structure May Be Employed Using Any Detail From Structural Connections Section "D" Series Details Where Assembly Design Value Meets Or Exceeds Brace Reaction.
7. For Trade Specific Bracing Installation Notes, Refer To Page 8.1 or 10.1.
8. Utilize Any "G" Series Vertical Support Connection Having A Design Value Equal To Or Greater Than The Corresponding "Rod Total Vertical Load".

REVIEWED FOR CODE COMPLIANCE BY: HCAi OPM-0403 BY: William Staehlin DATE: 01-26-2024 CALIFORNIA BUILDING CODE

REGISTERED PROFESSIONAL ENGINEER MARCIN WASAZNIK S 6612 STRUCTURAL STATE OF CALIFORNIA

ISAT
A Division of Tomarco Contractor Specialties
International Seismic Application Technology
14848 Northam Street, La Mirada, CA 90638
877-999-4728 (Toll Free) 714-523-0845 (Fax)
www.isatsb.com

Rev. 1
11/19/18

4-WAY SPLAYED RIGID BRACING REQUIREMENTS [7]:

2-TIERED TRAPEZE MOUNTED PIPING (Plumbing, Mechanical, Process, Medical Gas) — **MAXIMUM SEISMIC DESIGN FORCE = 0.50 G's**

Requires Use of ISAT Seismic Brackets. Use of Any Non-ISAT Bracket Voids Engineering. 2013 California Building Code Compliant

Combined 2-Tier Maximum Total Trapeze Load (lbs/lf)	Max. Vertical Support Spacing (ft.)	Rod [1] Total Vertical Load (lbs)	Min. [8] Vertical Support Rod Dia. (in.)	4-WAY SPLAYED RIGID BRACING REQUIREMENTS				
				Max. [2] Brace Spacing (ft.)	Brace [3] Reaction P (lbs)	Min. Brace Assembly E - Pages	Min. Brace Anchorage [6] Form Pour [4] Deck Page D1	Min. Brace Anchorage [6] Metal [5] Deck Page D2
				4-Way Splayed Brace Pattern (B12.4)				
11.0	10	312	3/8	40	121	R38AAEM306	N2	L2
25.0	10	708	1/2	40	275	R12AAEM306	N3	L3
35.0	10	991	1/2	40	385	R12AAEM406	N4	L4
50.0	10	1,416	1/2	40	550	R12AAEM406	N6	L6
65.0	10	1,841	5/8	40	715	R58AAEM509	N8	L8
75.0	10	2,124	3/4	40	825	R34CFB1P09	N9	L9
100.0	10	2,832	3/4	40	1,100	R34CFB1P06	N12	L12
125.0	10	3,051	3/4	32	1,100	R34CFB1P06	N12	L12
150.0	10	3,295	3/4	27	1,114	R34CFB1P06	N12	L12
175.0	10	3,417	3/4	22	1,059	R34CFB1P06	N11	L11
200.0	10	3,416	3/4	17	935	R34CFB1P06	N10	L10
225.0	10	3,404	3/4	13	804	R34CFB1P09	N9	L9

1. TVL = DL + Fv + ($0.2S_{DS}$/1.4 x Wp). All Terms Are Working Loads. Based On Eccentric Loading. 65% Of Total Load Allocated Per Rod.
2. Reductions In Actual Installed Brace Spacing Will Result In An Equal Percentage Reduction In Brace Reaction. As An Option When This Occurs ISAT May Substitute An Alternate Anchorage From Tables D1 or D2 Which Meets or Exceeds The Lowered Brace Reaction.
3. At Max. 50 Degree Brace Inclination. Assumes 50% Of Total Trapeze Load Per Tier.
4. Min. 3,000 psi NWC. Any "N Series" Connection May Be Utilized Having A Numeric Designation Equal To Or Higher Than That Shown.
5. Min. 3,000 psi NWC or LWC. Any "L Series" Connection May Be Utilized Having A Numeric Designation Equal To Or Higher Than That Shown.
6. As An Alternate, Brace Anchorage Connections To Structure May Be Employed Using Any Detail From Structural Connections Section "D" Series Details Where Assembly Design Value Meets Or Exceeds Brace Reaction.
7. For Trade Specific Bracing Installation Notes, Refer To Page 8.1 or 10.1.
8. Utilize Any "G" Series Vertical Support Connection Having A Design Value Equal To Or Greater Than The Corresponding "Rod Total Vertical Load".

REVIEWED FOR CODE COMPLIANCE BY: HCAi OPM-0403 BY: William Staehlin DATE: 01-26-2024 CALIFORNIA BUILDING CODE

REGISTERED PROFESSIONAL ENGINEER MARCIN WASAZNIK S-6612 STRUCTURAL STATE OF CALIFORNIA

ISAT
A Division of Tomarco Contractor Specialties
International Seismic Application Technology
14848 Northam Street, La Mirada, CA 90638
877-999-4728 (Toll Free) 714-523-0845 (Fax)
www.isatsb.com

Rev. 1
11/19/18

4-WAY SPLAYED RIGID BRACING REQUIREMENTS [7] :

2-TIERED TRAPEZE MOUNTED PIPING (Plumbing, Mechanical, Process, Medical Gas) ***MAXIMUM SEISMIC DESIGN FORCE = 0.50 G's***

Requires Use of ISAT Seismic Brackets. Use of Any Non-ISAT Bracket Voids Engineering. 2013 California Building Code Compliant

Combined 2-Tier Maximum Total Trapeze Load (lbs/lf)	Max. Vertical Support Spacing (ft.)	Rod [1] Total Vertical Load (lbs)	Min. [8] Vertical Support Rod Dia. (in.)	4-WAY SPLAYED RIGID BRACING REQUIREMENTS				
				Max. [2] Brace Spacing (ft.)	Brace [3] Reaction P (lbs)	Min. Brace Assembly E - Pages	Min. Brace Anchorage [6] Form Pour [4] Deck Page D1	Min. Brace Anchorage [6] Metal [5] Deck Page D2
				4-Way Splayed Brace Pattern (B12.4)				
11.0	10	409	3/8	40	156	R38AAEM306	N2	L2
25.0	10	930	1/2	40	354	R12AAEM406	N4	L4
35.0	10	1,301	1/2	40	495	R12AAEM406	N5	L5
50.0	10	1,859	5/8	40	707	R58AAEM509	N8	L8
65.0	10	2,417	3/4	40	919	R34DGB1P06	N10	L10
75.0	10	2,576	3/4	36	955	R34DGB1P06	N10	L10
100.0	10	2,795	3/4	27	955	R34DGB1P06	N10	L10
125.0	10	3,050	3/4	22	972	R34DGB1P06	N10	L10
150.0	10	3,340	3/4	19	1,008	R34DGB1P06	N11	L11
175.0	10	3,400	3/4	15	928	R34DGB1P06	N10	L10
200.0	10	3,459	3/4	12	849	R34CFB1P09	N9	L9

1. TVL = DL + Fv + ($0.2S_{DS}$/1.4 x Wp). All Terms Are Working Loads. Based On Eccentric Loading. 65% Of Total Load Allocated Per Rod.
2. Reductions In Actual Installed Brace Spacing Will Result In An Equal Percentage Reduction In Brace Reaction. As An Option When This Occurs ISAT May Substitute An Alternate Anchorage From Tables D1 or D2 Which Meets or Exceeds The Lowered Brace Reaction.
3. At Max. 60 Degree Brace Inclination. Assumes 50% Of Total Trapeze Load Per Tier.
4. Min. 3,000 psi NWC. Any "N Series" Connection May Be Utilized Having A Numeric Designation Equal To Or Higher Than That Shown.
5. Min. 3,000 psi NWC or LWC. Any "L Series" Connection May Be Utilized Having A Numeric Designation Equal To Or Higher Than That Shown.
6. As An Alternate, Brace Anchorage Connections To Structure May Be Employed Using Any Detail From Structural Connections Section "D" Series Details Where Assembly Design Value Meets Or Exceeds Brace Reaction.
7. For Trade Specific Bracing Installation Notes, Refer To Page 8.1 or 10.1.
8. Utilize Any "G" Series Vertical Support Connection Having A Design Value Equal To Or Greater Than The Corresponding "Rod Total Vertical Load".

REVIEWED FOR CODE COMPLIANCE BY: HCAi OPM-0403 DATE: 01-26-2024 CALIFORNIA BUILDING CODE COMPLIANT

REGISTERED PROFESSIONAL ENGINEER MARCIN WASAZNIK S-6612 STRUCTURAL STATE OF CALIFORNIA

ISAT
A Division of Tomarco Contractor Specialties

International Seismic Application Technology
14848 Northam Street, La Mirada, CA 90638
877-999-4728 (Toll Free) 714-523-0845 (Fax)
www.isatsb.com

Rev. 1
11/19/18
Page
C17-0.5-60
2-Tier

4-WAY SPLAYED RIGID BRACING REQUIREMENTS [7]:

2-TIERED TRAPEZE MOUNTED PIPING (Plumbing, Mechanical, Process, Medical Gas) — **MAXIMUM SEISMIC DESIGN FORCE = 0.75 G's**

Requires Use of ISAT Seismic Brackets. Use of Any Non-ISAT Bracket Voids Engineering. 2013 California Building Code Compliant

Combined 2-Tier Maximum Total Trapeze Load (lbs/lf)	Max. Vertical Support Spacing (ft.)	Rod [1] Total Vertical Load (lbs)	Min. [8] Vertical Support Rod Dia. (in.)	4-WAY SPLAYED RIGID BRACING REQUIREMENTS				
				Max. [2] Brace Spacing (ft.)	Brace [3] Reaction P (lbs)	Min. Brace Assembly E - Pages	Min. Brace Anchorage [6] Form Pour [4] Deck Page D1	Min. Brace Anchorage [6] Metal [5] Deck Page D2
				4-Way Splayed Brace Pattern (B12.4)				
11.0	10	253	3/8	40	135	R38AAEM306	N2	L2
25.0	10	574	1/2	40	306	R12AAEM409	N4	L4
35.0	10	804	1/2	40	429	R12AAEM406	N5	L5
50.0	10	1,149	1/2	40	612	R12AAEM406	N7	L7
65.0	10	1,494	5/8	40	796	R58AAEM506	N8	L8
75.0	10	1,723	5/8	40	919	R58AAEM506	N10	L10
100.0	10	2,227	5/8	38	1,164	R58AAEM506	N12	L12
125.0	10	2,340	5/8	28	1,072	R58AAEM506	N11	L11
150.0	10	2,435	3/4	21	964	R34DGB1P06	N10	L10
175.0	10	2,654	3/4	18	964	R34DGB1P06	N10	L10
200.0	10	2,891	3/4	16	980	R34DGB1P06	N10	L10
225.0	10	3,093	3/4	14	964	R34DGB1P06	N10	L10

1. TVL = DL + Fv + ($0.2S_{DS}$/1.4 x Wp). All Terms Are Working Loads. Based On Eccentric Loading. 65% Of Total Load Allocated Per Rod.
2. Reductions In Actual Installed Brace Spacing Will Result In An Equal Percentage Reduction In Brace Reaction. As An Option When This Occurs ISAT May Substitute An Alternate Anchorage From Tables D1 or D2 Which Meets or Exceeds The Lowered Brace Reaction.
3. At Max. 30 Degree Brace Inclination. Assumes 50% Of Total Trapeze Load Per Tier.
4. Min. 3,000 psi NWC. Any "N Series" Connection May Be Utilized Having A Numeric Designation Equal To Or Higher Than That Shown.
5. Min. 3,000 psi NWC or LWC. Any "L Series" Connection May Be Utilized Having A Numeric Designation Equal To Or Higher Than That Shown.
6. As An Alternate, Brace Anchorage Connections To Structure May Be Employed Using Any Detail From Structural Connections Section "D" Series Details Where Assembly Design Value Meets Or Exceeds Brace Reaction.
7. For Trade Specific Bracing Installation Notes, Refer To Page 8.1 or 10.1.
8. Utilize Any "G" Series Vertical Support Connection Having A Design Value Equal To Or Greater Than The Corresponding "Rod Total Vertical Load".

REVIEWED FOR CODE COMPLIANCE
HCAi
OPM-0403
BY: William Staehlin
DATE: 01-26-2024
CALIFORNIA BUILDING CODE

REGISTERED PROFESSIONAL ENGINEER MARCIN WASAZNIK S 6612 STRUCTURAL STATE OF CALIFORNIA

ISAT
A Division of Tomarco Contractor Specialties
International Seismic Application Technology
14848 Northam Street, La Mirada, CA 90638
877-999-4728 (Toll Free) 714-523-0845 (Fax)
www.isatsb.com

Rev. 1
11/19/18
Page
C17-0.75-30
2-Tier

4-WAY SPLAYED RIGID BRACING REQUIREMENTS [7] :

2-TIERED TRAPEZE MOUNTED PIPING (Plumbing, Mechanical, Process, Medical Gas) ***MAXIMUM SEISMIC DESIGN FORCE = 0.75 G's***

Requires Use of ISAT Seismic Brackets. Use of Any Non-ISAT Bracket Voids Engineering. 2013 California Building Code Compliant

Combined 2-Tier Maximum Total Trapeze Load (lbs/lf)	Max. Vertical Support Spacing (ft.)	Rod [1] Total Vertical Load (lbs)	Min. [8] Vertical Support Rod Dia. (in.)	4-WAY SPLAYED RIGID BRACING REQUIREMENTS				
				Max. [2] Brace Spacing (ft.)	Brace [3] Reaction P (lbs)	Min. Brace Assembly E - Pages	Min. Brace Anchorage [6] Form Pour [4] Deck Page D1	Min. Brace Anchorage [6] Metal [5] Deck Page D2
				4-Way Splayed Brace Pattern (B12.4)				
11.0	10	419	3/8	40	182	R38AAEM306	N2	L2
25.0	10	952	1/2	40	413	R12AAEM406	N5	L5
35.0	10	1,333	5/8	40	578	R58AAEM406	N6	L6
50.0	10	1,905	3/4	40	825	R34CFB1P09	N9	L9
65.0	10	2,476	3/4	40	1,073	R34CFB1P06	N11	L11
75.0	10	2,582	3/4	35	1,083	R34CFB1P06	N11	L11
100.0	10	2,857	3/4	27	1,114	R34CFB1P06	N12	L12
125.0	10	3,021	3/4	21	1,083	R34CFB1P06	N11	L11
150.0	10	3,295	3/4	18	1,114	R34CFB1P06	N12	L12
175.0	10	3,460	3/4	15	1,083	R34CFB1P06	N11	L11
200.0	10	3,368	3/4	11	908	R34CFB1P09	N10	L10

1. TVL = DL + Fv + ($0.2S_{DS}$/1.4 x Wp). All Terms Are Working Loads. Based On Eccentric Loading. 65% Of Total Load Allocated Per Rod.
2. Reductions In Actual Installed Brace Spacing Will Result In An Equal Percentage Reduction In Brace Reaction. As An Option When This Occurs ISAT May Substitute An Alternate Anchorage From Tables D1 or D2 Which Meets or Exceeds The Lowered Brace Reaction.
3. At Max. 50 Degree Brace Inclination. Assumes 50% Of Total Trapeze Load Per Tier.
4. Min. 3,000 psi NWC. Any "N Series" Connection May Be Utilized Having A Numeric Designation Equal To Or Higher Than That Shown.
5. Min. 3,000 psi NWC or LWC. Any "L Series" Connection May Be Utilized Having A Numeric Designation Equal To Or Higher Than That Shown.
6. As An Alternate, Brace Anchorage Connections To Structure May Be Employed Using Any Detail From Structural Connections Section "D" Series Details Where Assembly Design Value Meets Or Exceeds Brace Reaction.
7. For Trade Specific Bracing Installation Notes, Refer To Page 8.1 or 10.1.
8. Utilize Any "G" Series Vertical Support Connection Having A Design Value Equal To Or Greater Than The Corresponding "Rod Total Vertical Load".

REVIEWED FOR CODE COMPLIANCE BY: HCAi OPM-0403 DATE: 01-26-2024 CALIFORNIA BUILDING CODE COMPLIANCE

REGISTERED PROFESSIONAL ENGINEER MARCIN WASAZNIK S-6612 STRUCTURAL STATE OF CALIFORNIA

ISAT
A Division of Tomarco Contractor Specialties

International Seismic Application Technology
14848 Northam Street, La Mirada, CA 90638
877-999-4728 (Toll Free) 714-523-0845 (Fax)
www.isatsb.com

Rev. 1
11/19/18
Page
C17-0.75-45
2-Tier

4-WAY SPLAYED RIGID BRACING REQUIREMENTS [7] :

2-TIERED TRAPEZE MOUNTED PIPING (Plumbing, Mechanical, Process, Medical Gas) ***MAXIMUM SEISMIC DESIGN FORCE = 0.75 G's***

Requires Use of ISAT Seismic Brackets. Use of Any Non-ISAT Bracket Voids Engineering. 2013 California Building Code Compliant

Combined 2-Tier Maximum Total Trapeze Load (lbs/lf)	Max. Vertical Support Spacing (ft.)	Rod [1] Total Vertical Load (lbs)	Min. [8] Vertical Support Rod Dia. (in.)	4-WAY SPLAYED RIGID BRACING REQUIREMENTS				
				Max. [2] Brace Spacing (ft.)	Brace [3] Reaction P (lbs)	Min. Brace Assembly E - Pages	Min. Brace Anchorage [6] Form Pour [4] Deck Page D1	Min. Brace Anchorage [6] Metal [5] Deck Page D2
				4-Way Splayed Brace Pattern (B12.4)				
11.0	10	565	1/2	40	233	R12AAEM306	N3	L3
25.0	10	1,285	5/8	40	530	R58AAEM406	N6	L6
35.0	10	1,799	3/4	40	742	R34CFB1P09	N8	L8
50.0	10	2,356	3/4	36	955	R34DGB1P06	N10	L10
65.0	10	2,509	3/4	28	965	R34DGB1P06	N10	L10
75.0	10	2,576	3/4	24	955	R34DGB1P06	N10	L10
100.0	10	2,795	3/4	18	955	R34DGB1P06	N10	L10
125.0	10	3,094	3/4	15	994	R34DGB1P06	N10	L10
150.0	10	3,234	3/4	12	955	R34DGB1P06	N10	L10
175.0	10	3,400	3/4	10	928	R34DGB1P06	N10	L10

1. TVL = DL + Fv + ($0.2S_{DS}$/1.4 x Wp). All Terms Are Working Loads. Based On Eccentric Loading. 65% Of Total Load Allocated Per Rod.
2. Reductions In Actual Installed Brace Spacing Will Result In An Equal Percentage Reduction In Brace Reaction. As An Option When This Occurs ISAT May Substitute An Alternate Anchorage From Tables D1 or D2 Which Meets or Exceeds The Lowered Brace Reaction.
3. At Max. 60 Degree Brace Inclination. Assumes 50% Of Total Trapeze Load Per Tier.
4. Min. 3,000 psi NWC. Any "N Series" Connection May Be Utilized Having A Numeric Designation Equal To Or Higher Than That Shown.
5. Min. 3,000 psi NWC or LWC. Any "L Series" Connection May Be Utilized Having A Numeric Designation Equal To Or Higher Than That Shown.
6. As An Alternate, Brace Anchorage Connections To Structure May Be Employed Using Any Detail From Structural Connections Section "D" Series Details Where Assembly Design Value Meets Or Exceeds Brace Reaction.
7. For Trade Specific Bracing Installation Notes, Refer To Page 8.1 or 10.1.
8. Utilize Any "G" Series Vertical Support Connection Having A Design Value Equal To Or Greater Than The Corresponding "Rod Total Vertical Load".

REVIEWED FOR CODE COMPLIANCE BY: HCAi OPM-0403 William Staehlin DATE: 01-26-2024 CALIFORNIA BUILDING CODE

REGISTERED PROFESSIONAL ENGINEER MARCIN WASAZNIK S-6612 STRUCTURAL STATE OF CALIFORNIA

ISAT
A Division of Tomarco Contractor Specialties

International Seismic Application Technology
14848 Northam Street, La Mirada, CA 90638
877-999-4728 (Toll Free) 714-523-0845 (Fax)
www.isatsb.com

Rev. 1
11/19/18
Page
C17-0.75-60
2-Tier

4-WAY SPLAYED RIGID BRACING REQUIREMENTS [7] :

2-TIERED TRAPEZE MOUNTED PIPING (Plumbing, Mechanical, Process, Medical Gas) ***MAXIMUM SEISMIC DESIGN FORCE = 1.00 G's***

Requires Use of ISAT Seismic Brackets. Use of Any Non-ISAT Bracket Voids Engineering. 2013 California Building Code Compliant

Combined 2-Tier Maximum Total Trapeze Load (lbs/lf)	Max. Vertical Support Spacing (ft.)	Rod [1] Total Vertical Load (lbs)	Min. [8] Vertical Support Rod Dia. (in.)	4-WAY SPLAYED RIGID BRACING REQUIREMENTS				
				Max. [2] Brace Spacing (ft.)	Brace [3] Reaction P (lbs)	Min. Brace Assembly E - Pages	Min. Brace Anchorage [6] Form Pour [4] Deck Page D1	Min. Brace Anchorage [6] Metal [5] Deck Page D2
				4-Way Splayed Brace Pattern (B12.4)				
11.0	10	305	3/8	40	180	R38AAEM306	N2	L2
25.0	10	693	1/2	40	408	R12AAEM406	N5	L5
35.0	10	970	1/2	40	572	R12AAEM406	N6	L6
50.0	10	1,386	1/2	40	816	R12AAEM506	N9	L9
65.0	10	1,801	5/8	40	1,061	R58AAEM506	N11	L11
75.0	10	2,007	5/8	38	1,164	R58AAEM506	N12	L12
100.0	10	2,251	5/8	29	1,184	R58AAEM506	N12	L12
125.0	10	2,340	5/8	21	1,072	R58AAEM506	N11	L11
150.0	10	2,453	3/4	16	980	R34DGB1P06	N10	L10
175.0	10	2,613	3/4	13	929	R34DGB1P06	N10	L10
200.0	10	2,891	3/4	12	980	R34DGB1P06	N10	L10
225.0	10	3,040	3/4	10	919	R34DGB1P06	N10	L10

1. TVL = DL + Fv + ($0.2S_{DS}$/1.4 x Wp). All Terms Are Working Loads. Based On Eccentric Loading. 65% Of Total Load Allocated Per Rod.
2. Reductions In Actual Installed Brace Spacing Will Result In An Equal Percentage Reduction In Brace Reaction. As An Option When This Occurs ISAT May Substitute An Alternate Anchorage From Tables D1 or D2 Which Meets or Exceeds The Lowered Brace Reaction.
3. At Max. 30 Degree Brace Inclination. Assumes 50% Of Total Trapeze Load Per Tier.
4. Min. 3,000 psi NWC. Any "N Series" Connection May Be Utilized Having A Numeric Designation Equal To Or Higher Than That Shown.
5. Min. 3,000 psi NWC or LWC. Any "L Series" Connection May Be Utilized Having A Numeric Designation Equal To Or Higher Than That Shown.
6. As An Alternate, Brace Anchorage Connections To Structure May Be Employed Using Any Detail From Structural Connections Section "D" Series Details Where Assembly Design Value Meets Or Exceeds Brace Reaction.
7. For Trade Specific Bracing Installation Notes, Refer To Page 8.1 or 10.1.
8. Utilize Any "G" Series Vertical Support Connection Having A Design Value Equal To Or Greater Than The Corresponding "Rod Total Vertical Load".

REVIEWED FOR CODE COMPLIANCE
HCAi
OPM-0403
BY: William Staehlin
DATE: 01-26-2024
CALIFORNIA BUILDING CODE

REGISTERED PROFESSIONAL ENGINEER MARCIN WASAZNIK S-6612 STRUCTURAL STATE OF CALIFORNIA

ISAT
A Division of Tomarco Contractor Specialties
International Seismic Application Technology
14848 Northam Street, La Mirada, CA 90638
877-999-4728 (Toll Free) 714-523-0845 (Fax)
www.isatsb.com

Rev. 1
11/19/18
Page
C17-1-30
2-Tier

4-WAY SPLAYED RIGID BRACING REQUIREMENTS [7] :

2-TIERED TRAPEZE MOUNTED PIPING (Plumbing, Mechanical, Process, Medical Gas) ***MAXIMUM SEISMIC DESIGN FORCE = 1.00 G's***

Requires Use of ISAT Seismic Brackets. Use of Any Non-ISAT Bracket Voids Engineering. 2013 California Building Code Compliant

Combined 2-Tier Maximum Total Trapeze Load (lbs/lf)	Max. Vertical Support Spacing (ft.)	Rod [1] Total Vertical Load (lbs)	Min. [8] Vertical Support Rod Dia. (in.)	4-WAY SPLAYED RIGID BRACING REQUIREMENTS				
				Max. [2] Brace Spacing (ft.)	Brace [3] Reaction P (lbs)	Min. Brace Assembly E - Pages	Min. Brace Anchorage [6] Form Pour [4] Deck Page D1	Min. Brace Anchorage [6] Metal [5] Deck Page D2
				4-Way Splayed Brace Pattern (B12.4)				
11.0	10	527	1/2	40	242	R12AAEM306	N3	L3
25.0	10	1,197	1/2	40	550	R12AAEM406	N6	L6
35.0	10	1,675	5/8	40	770	R58AAEM509	N8	L8
50.0	10	2,345	3/4	39	1,073	R34CFB1P06	N11	L11
65.0	10	2,476	3/4	30	1,073	R34CFB1P06	N11	L11
75.0	10	2,564	3/4	26	1,073	R34CFB1P06	N11	L11
100.0	10	2,832	3/4	20	1,100	R34CFB1P06	N12	L12
125.0	10	3,051	3/4	16	1,100	R34CFB1P06	N12	L12
150.0	10	3,222	3/4	13	1,073	R34CFB1P06	N11	L11
175.0	10	3,417	3/4	11	1,059	R34CFB1P06	N11	L11

1. TVL = DL + Fv + ($0.2S_{DS}$/1.4 x Wp). All Terms Are Working Loads. Based On Eccentric Loading. 65% Of Total Load Allocated Per Rod.
2. Reductions In Actual Installed Brace Spacing Will Result In An Equal Percentage Reduction In Brace Reaction. As An Option When This Occurs ISAT May Substitute An Alternate Anchorage From Tables D1 or D2 Which Meets or Exceeds The Lowered Brace Reaction.
3. At Max. 50 Degree Brace Inclination. Assumes 50% Of Total Trapeze Load Per Tier.
4. Min. 3,000 psi NWC. Any "N Series" Connection May Be Utilized Having A Numeric Designation Equal To Or Higher Than That Shown.
5. Min. 3,000 psi NWC or LWC. Any "L Series" Connection May Be Utilized Having A Numeric Designation Equal To Or Higher Than That Shown.
6. As An Alternate, Brace Anchorage Connections To Structure May Be Employed Using Any Detail From Structural Connections Section "D" Series Details Where Assembly Design Value Meets Or Exceeds Brace Reaction.
7. For Trade Specific Bracing Installation Notes, Refer To Page 8.1 or 10.1.
8. Utilize Any "G" Series Vertical Support Connection Having A Design Value Equal To Or Greater Than The Corresponding "Rod Total Vertical Load".

REVIEWED FOR CODE COMPLIANCE BY: HCAi OPM-0403 William Staehlin DATE: 01-26-2024 CALIFORNIA BUILDING CODE

REGISTERED PROFESSIONAL ENGINEER MARCIN WASAZNIK S-6612 STRUCTURAL STATE OF CALIFORNIA

ISAT
A Division of Tomarco Contractor Specialties

International Seismic Application Technology
14848 Northam Street, La Mirada, CA 90638
877-999-4728 (Toll Free) 714-523-0845 (Fax)
www.isatsb.com

Rev. 1
11/19/18
Page
C17-1-45
2-Tier

4-WAY SPLAYED RIGID BRACING REQUIREMENTS [7] :

2-TIERED TRAPEZE MOUNTED PIPING (Plumbing, Mechanical, Process, Medical Gas) ***MAXIMUM SEISMIC DESIGN FORCE = 1.00 G's***

Requires Use of ISAT Seismic Brackets. Use of Any Non-ISAT Bracket Voids Engineering. 2013 California Building Code Compliant

Combined 2-Tier Maximum Total Trapeze Load (lbs/lf)	Max. Vertical Support Spacing (ft.)	Rod [1] Total Vertical Load (lbs)	Min. [8] Vertical Support Rod Dia. (in.)	4-WAY SPLAYED RIGID BRACING REQUIREMENTS				
				Max. [2] Brace Spacing (ft.)	Brace [3] Reaction P (lbs)	Min. Brace Assembly E - Pages	Min. Brace Anchorage [6] Form Pour [4] Deck Page D1	Min. Brace Anchorage [6] Metal [5] Deck Page D2
				4-Way Splayed Brace Pattern (B12.4)				
11.0	10	721	1/2	40	311	R12AAEM409	N4	L4
25.0	10	1,640	3/4	40	707	R34CFB1P09	N8	L8
35.0	10	2,196	3/4	38	940	R34DGB1P06	N10	L10
50.0	10	2,356	3/4	27	955	R34DGB1P06	N10	L10
65.0	10	2,509	3/4	21	965	R34DGB1P06	N10	L10
75.0	10	2,576	3/4	18	955	R34DGB1P06	N10	L10
100.0	10	2,724	3/4	13	919	R34DGB1P06	N10	L10
125.0	10	3,050	3/4	11	972	R34DGB1P06	N10	L10

1. TVL = DL + Fv + ($0.2S_{DS}$/1.4 x Wp). All Terms Are Working Loads. Based On Eccentric Loading. 65% Of Total Load Allocated Per Rod.
2. Reductions In Actual Installed Brace Spacing Will Result In An Equal Percentage Reduction In Brace Reaction. As An Option When This Occurs ISAT May Substitute An Alternate Anchorage From Tables D1 or D2 Which Meets or Exceeds The Lowered Brace Reaction.
3. At Max. 60 Degree Brace Inclination. Assumes 50% Of Total Trapeze Load Per Tier.
4. Min. 3,000 psi NWC. Any "N Series" Connection May Be Utilized Having A Numeric Designation Equal To Or Higher Than That Shown.
5. Min. 3,000 psi NWC or LWC. Any "L Series" Connection May Be Utilized Having A Numeric Designation Equal To Or Higher Than That Shown.
6. As An Alternate, Brace Anchorage Connections To Structure May Be Employed Using Any Detail From Structural Connections Section "D" Series Details Where Assembly Design Value Meets Or Exceeds Brace Reaction.
7. For Trade Specific Bracing Installation Notes, Refer To Page 8.1 or 10.1.
8. Utilize Any "G" Series Vertical Support Connection Having A Design Value Equal To Or Greater Than The Corresponding "Rod Total Vertical Load".

REVIEWED FOR CODE COMPLIANCE
HCAi
OPM-0403
BY: William Staehlin
DATE: 01-26-2024
CALIFORNIA BUILDING CODE

REGISTERED PROFESSIONAL ENGINEER MARCIN WASAZNIK S-6612 STRUCTURAL STATE OF CALIFORNIA

ISAT
A Division of Tomarco Contractor Specialties
International Seismic Application Technology
14848 Northam Street, La Mirada, CA 90638
877-999-4728 (Toll Free) 714-523-0845 (Fax)
www.isatsb.com

Rev. 1
11/19/18
Page
C17-1-60
2-Tier

4-WAY SPLAYED CABLE BRACING REQUIREMENTS [7]:

TRAPEZE MOUNTED PIPING (Plumbing, Mechanical, Process, Medical Gas) ***MAXIMUM SEISMIC DESIGN FORCE = 0.25 G's***

Requires Use of ISAT Seismic Brackets. Use of Any Non-ISAT Bracket Voids Engineering. 2013 California Building Code Compliant

Maximum Trapeze Load (lbs/lf)	Max. Vertical Support Spacing (ft.)	Rod [1] Total Vertical Load (lbs)	Min. [8] Vertical Support Rod Dia. (in.)	4-WAY SPLAYED CABLE BRACING REQUIREMENTS				
				Max. [2] Brace Spacing (ft.)	Brace [3] Reaction P (lbs)	Min. Brace Assembly E - Pages	Min. Brace Anchorage [6] Form Pour [4] Deck Page D1	Min. Brace Anchorage [6] Metal [5] Deck Page D2
				4-Way Splayed Brace Pattern (B15.2)				
11.0	10	97	3/8	40	180	C38AA04WS	N2	L2
25.0	10	219	1/2	40	408	C12AA04WS	N5	L5
35.0	10	307	1/2	40	572	C12AA04WS	N6	L6
50.0	10	439	1/2	40	816	C12AA06WS	N9	L9
65.0	10	570	1/2	40	1,061	C12AA06WS	N11	L11
75.0	10	658	1/2	38	1,164	C12AA06WS	N12	L12
100.0	10	878	1/2	29	1,184	C12AA06WS	N12	L12
125.0	10	1,097	1/2	23	1,174	C12AA06WS	N12	L12
150.0	10	1,316	1/2	19	1,164	C12AA06WS	N12	L12
175.0	10	1,536	5/8	16	1,143	C58AA06WS	N12	L12
200.0	10	1,755	5/8	14	1,143	C58AA06WS	N12	L12
225.0	10	1,974	5/8	12	1,102	C58AA06WS	N12	L12

1. TVL = DL + Fv + ($0.2S_{DS}$/1.4 x Wp). All Terms Are Working Loads. Based On Eccentric Loading. 65% Of Total Load Allocated Per Rod.
2. Reductions In Actual Installed Brace Spacing Will Result In An Equal Percentage Reduction In Brace Reaction. As An Option When This Occurs ISAT May Substitute An Alternate Anchorage From Tables D1 or D2 Which Meets or Exceeds The Lowered Brace Reaction.
3. At Max. 30 Degree Brace Inclination.
4. Min. 3,000 psi NWC. Any "N Series" Connection May Be Utilized Having A Numeric Designation Equal To Or Higher Than That Shown.
5. Min. 3,000 psi NWC or LWC. Any "L Series" Connection May Be Utilized Having A Numeric Designation Equal To Or Higher Than That Shown.
6. As An Alternate, Brace Anchorage Connections To Structure May Be Employed Using Any Detail From Structural Connections Section "D" Series Details Where Assembly Design Value Meets Or Exceeds Brace Reaction.
7. For Trade Specific Bracing Installation Notes, Refer To Page 8.1 or 10.1.
8. Utilize Any "G" Series Vertical Support Connection Having A Design Value Equal To Or Greater Than The Corresponding "Rod Total Vertical Load".

REVIEWED FOR CODE COMPLIANCE
HCAi
OPM-0403
BY: William Staehlin
DATE: 01-26-2024
CALIFORNIA BUILDING CODE

REGISTERED PROFESSIONAL ENGINEER
MARCIN WASAZNIK
S 6612
STRUCTURAL
STATE OF CALIFORNIA

ISAT
A Division of Tomarco Contractor Specialties

International Seismic Application Technology
14848 Northam Street, La Mirada, CA 90638
877-999-4728 (Toll Free) 714-523-0845 (Fax)
www.isatsb.com

Rev. 1
03/12/19
Page
C18-0.25-30

4-WAY SPLAYED CABLE BRACING REQUIREMENTS [7]:

TRAPEZE MOUNTED PIPING (Plumbing, Mechanical, Process, Medical Gas) ***MAXIMUM SEISMIC DESIGN FORCE = 0.25 G's***

Requires Use of ISAT Seismic Brackets. Use of Any Non-ISAT Bracket Voids Engineering. 2013 California Building Code Compliant

Maximum Trapeze Load (lbs/lf)	Max. Vertical Support Spacing (ft.)	Rod [1] Total Vertical Load (lbs)	Min. [8] Vertical Support Rod Dia. (in.)	4-WAY SPLAYED CABLE BRACING REQUIREMENTS				
				Max. [2] Brace Spacing (ft.)	Brace [3] Reaction P (lbs)	Min. Brace Assembly E - Pages	Min. Brace Anchorage [6] Form Pour [4] Deck Page D1	Min. Brace Anchorage [6] Metal [5] Deck Page D2
				4-Way Splayed Brace Pattern (B15.2)				
11.0	10	97	3/8	40	242	C38AA04WS	N3	L3
25.0	10	219	1/2	40	550	C12AA04WS	N6	L6
35.0	10	307	1/2	40	770	C12AA06WS	N8	L8
50.0	10	439	1/2	40	1,100	C12AA06WS	N12	L12
65.0	10	570	5/8	40	1,430	C58AA06WS	N15	L15
75.0	10	658	5/8	40	1,650	C58DG06TS	N17	L17
100.0	10	878	5/8	33	1,815	C58DG06TS	N19	L19
125.0	10	1,097	5/8	26	1,788	C58DG06TS	N18	L18
150.0	10	1,316	5/8	22	1,815	C58DG06TS	N19	L19
175.0	10	1,536	5/8	19	1,829	C58DG06TS	N19	L19
200.0	10	1,755	5/8	16	1,760	C58DG06TS	N18	L18
225.0	10	1,974	5/8	14	1,733	C58DG06TS	N18	L18

1. TVL = DL + Fv + ($0.2S_{DS}$/1.4 x Wp). All Terms Are Working Loads. Based On Eccentric Loading. 65% Of Total Load Allocated Per Rod.
2. Reductions In Actual Installed Brace Spacing Will Result In An Equal Percentage Reduction In Brace Reaction. As An Option When This Occurs ISAT May Substitute An Alternate Anchorage From Tables D1 or D2 Which Meets or Exceeds The Lowered Brace Reaction.
3. At Max. 50 Degree Brace Inclination.
4. Min. 3,000 psi NWC. Any "N Series" Connection May Be Utilized Having A Numeric Designation Equal To Or Higher Than That Shown.
5. Min. 3,000 psi NWC or LWC. Any "L Series" Connection May Be Utilized Having A Numeric Designation Equal To Or Higher Than That Shown.
6. As An Alternate, Brace Anchorage Connections To Structure May Be Employed Using Any Detail From Structural Connections Section "D" Series Details Where Assembly Design Value Meets Or Exceeds Brace Reaction.
7. For Trade Specific Bracing Installation Notes, Refer To Page 8.1 or 10.1.
8. Utilize Any "G" Series Vertical Support Connection Having A Design Value Equal To Or Greater Than The Corresponding "Rod Total Vertical Load".

REVIEWED FOR CODE COMPLIANCE
HCAi
OPM-0403
BY: William Staehlin
DATE: 01-26-2024
CALIFORNIA BUILDING CODE, 2022

REGISTERED PROFESSIONAL ENGINEER
MARCIN WASAZNIK
S 6612
STRUCTURAL
STATE OF CALIFORNIA

ISAT
A Division of Tomarco Contractor Specialties

International Seismic Application Technology
14848 Northam Street, La Mirada, CA 90638
877-999-4728 (Toll Free) 714-523-0845 (Fax)
www.isatsb.com

Rev. 1
03/12/19
Page
C18-0.25-45

4-WAY SPLAYED CABLE BRACING REQUIREMENTS [7]:

TRAPEZE MOUNTED PIPING (Plumbing, Mechanical, Process, Medical Gas) ***MAXIMUM SEISMIC DESIGN FORCE = 0.25 G's***

Requires Use of ISAT Seismic Brackets. Use of Any Non-ISAT Bracket Voids Engineering. 2013 California Building Code Compliant

Maximum Trapeze Load (lbs/lf)	Max. Vertical Support Spacing (ft.)	Rod [1] Total Vertical Load (lbs)	Min.[8] Vertical Support Rod Dia. (in.)	4-WAY SPLAYED CABLE BRACING REQUIREMENTS				
				Max. [2] Brace Spacing (ft.)	Brace [3] Reaction P (lbs)	Min. Brace Assembly E - Pages	Min. Brace Anchorage [6] Form Pour [4] Deck Page D1	Min. Brace Anchorage [6] Metal [5] Deck Page D2
				4-Way Splayed Brace Pattern (B15.2)				
11.0	10	97	3/8	40	311	C38AA04WS	N4	L4
25.0	10	219	1/2	40	707	C12AA06WS	N8	L8
35.0	10	307	1/2	40	990	C12AA06WS	N10	L10
50.0	10	439	5/8	40	1,414	C58AA06WS	N15	L15
65.0	10	570	5/8	32	1,471	C58AA06WS	N15	L15
75.0	10	658	5/8	27	1,432	C58AA06WS	N15	L15
100.0	10	878	5/8	20	1,414	C58AA06WS	N15	L15
125.0	10	1,097	5/8	16	1,414	C58AA06WS	N15	L15
150.0	10	1,316	5/8	13	1,379	C58AA06WS	N14	L14
175.0	10	1,536	5/8	11	1,361	C58AA06WS	N14	L14
200.0	10	1,755	5/8	10	1,414	C58AA06WS	N15	L15

1. TVL = DL + Fv + ($0.2S_{DS}$/1.4 x Wp). All Terms Are Working Loads. Based On Eccentric Loading. 65% Of Total Load Allocated Per Rod.
2. Reductions In Actual Installed Brace Spacing Will Result In An Equal Percentage Reduction In Brace Reaction. As An Option When This Occurs ISAT May Substitute An Alternate Anchorage From Tables D1 or D2 Which Meets or Exceeds The Lowered Brace Reaction.
3. At Max. 60 Degree Brace Inclination.
4. Min. 3,000 psi NWC. Any "N Series" Connection May Be Utilized Having A Numeric Designation Equal To Or Higher Than That Shown.
5. Min. 3,000 psi NWC or LWC. Any "L Series" Connection May Be Utilized Having A Numeric Designation Equal To Or Higher Than That Shown.
6. As An Alternate, Brace Anchorage Connections To Structure May Be Employed Using Any Detail From Structural Connections Section "D" Series Details Where Assembly Design Value Meets Or Exceeds Brace Reaction.
7. For Trade Specific Bracing Installation Notes, Refer To Page 8.1 or 10.1.
8. Utilize Any "G" Series Vertical Support Connection Having A Design Value Equal To Or Greater Than The Corresponding "Rod Total Vertical Load".

REVIEWED FOR CODE COMPLIANCE
HCAI
OPM-0403
By: William Staehlin
DATE: 01-26-2024
CALIFORNIA BUILDING CODE, 2019

REGISTERED PROFESSIONAL ENGINEER MARCIN WASAZNIK S 6612 STRUCTURAL STATE OF CALIFORNIA

ISAT
A Division of Tomarco Contractor Specialties
International Seismic Application Technology
14848 Northam Street, La Mirada, CA 90638
877-999-4728 (Toll Free) 714-523-0845 (Fax)
www.isatsb.com

Rev. 1
03/12/19
Page
C18-0.25-60

4-WAY SPLAYED CABLE BRACING REQUIREMENTS [7]:

TRAPEZE MOUNTED PIPING (Plumbing, Mechanical, Process, Medical Gas) ***MAXIMUM SEISMIC DESIGN FORCE = 0.50 G's***

Requires Use of ISAT Seismic Brackets. Use of Any Non-ISAT Bracket Voids Engineering. 2013 California Building Code Compliant

Maximum Trapeze Load (lbs/lf)	Max. Vertical Support Spacing (ft.)	Rod [1] Total Vertical Load (lbs)	Min.[8] Vertical Support Rod Dia. (in.)	4-WAY SPLAYED CABLE BRACING REQUIREMENTS				
				Max. [2] Brace Spacing (ft.)	Brace [3] Reaction P (lbs)	Min. Brace Assembly E - Pages	Min. Brace Anchorage [6] Form Pour [4] Deck Page D1	Min. Brace Anchorage [6] Metal [5] Deck Page D2
				4-Way Splayed Brace Pattern (B15.2)				
11.0	10	97	3/8	40	359	C38AA04WS	N4	L4
25.0	10	219	1/2	40	816	C12AA06WS	N9	L9
35.0	10	307	1/2	40	1,143	C12AA06WS	N12	L12
50.0	10	439	1/2	29	1,184	C12AA06WS	N12	L12
65.0	10	570	1/2	22	1,168	C12AA06WS	N12	L12
75.0	10	658	1/2	19	1,164	C12AA06WS	N12	L12
100.0	10	878	1/2	14	1,143	C12AA06WS	N12	L12
125.0	10	1,097	1/2	11	1,123	C12AA06WS	N12	L12
150.0	10	1,316	1/2	10	1,225	C12AA06WS	N13	L13
175.0	10	1,536	5/8	10	1,429	C58AA06WS	N15	L15

1. TVL = DL + Fv + ($0.2S_{DS}$/1.4 x Wp). All Terms Are Working Loads. Based On Eccentric Loading. 65% Of Total Load Allocated Per Rod.
2. Reductions In Actual Installed Brace Spacing Will Result In An Equal Percentage Reduction In Brace Reaction. As An Option When This Occurs ISAT May Substitute An Alternate Anchorage From Tables D1 or D2 Which Meets or Exceeds The Lowered Brace Reaction.
3. At Max. 30 Degree Brace Inclination.
4. Min. 3,000 psi NWC. Any "N Series" Connection May Be Utilized Having A Numeric Designation Equal To Or Higher Than That Shown.
5. Min. 3,000 psi NWC or LWC. Any "L Series" Connection May Be Utilized Having A Numeric Designation Equal To Or Higher Than That Shown.
6. As An Alternate, Brace Anchorage Connections To Structure May Be Employed Using Any Detail From Structural Connections Section "D" Series Details Where Assembly Design Value Meets Or Exceeds Brace Reaction.
7. For Trade Specific Bracing Installation Notes, Refer To Page 8.1 or 10.1.
8. Utilize Any "G" Series Vertical Support Connection Having A Design Value Equal To Or Greater Than The Corresponding "Rod Total Vertical Load".

REVIEWED FOR CODE COMPLIANCE
HCAI
OPM-0403
By: William Staehlin
DATE: 01-26-2024
CALIFORNIA BUILDING CODE 2019

REGISTERED PROFESSIONAL ENGINEER
MARCIN WASAZNIK
S 6612
STRUCTURAL
STATE OF CALIFORNIA

ISAT
A Division of Tomarco Contractor Specialties

International Seismic Application Technology
14848 Northam Street, La Mirada, CA 90638
877-999-4728 (Toll Free) 714-523-0845 (Fax)
www.isatsb.com

Rev. 1
03/12/19
Page
C18-0.5-30

4-WAY SPLAYED CABLE BRACING REQUIREMENTS [7]:

TRAPEZE MOUNTED PIPING (Plumbing, Mechanical, Process, Medical Gas) ***MAXIMUM SEISMIC DESIGN FORCE = 0.50 G's***

Requires Use of ISAT Seismic Brackets. Use of Any Non-ISAT Bracket Voids Engineering. 2013 California Building Code Compliant

Maximum Trapeze Load (lbs/lf)	Max. Vertical Support Spacing (ft.)	Rod [1] Total Vertical Load (lbs)	Min.[8] Vertical Support Rod Dia. (in.)	4-WAY SPLAYED CABLE BRACING REQUIREMENTS				
				Max. [2] Brace Spacing (ft.)	Brace [3] Reaction P (lbs)	Min. Brace Assembly E - Pages	Min. Brace Anchorage [6] Form Pour [4] Deck Page D1	Min. Brace Anchorage [6] Metal [5] Deck Page D2
				4-Way Splayed Brace Pattern (B15.2)				
11.0	10	97	3/8	40	484	C38AA04WS	N5	L5
25.0	10	219	1/2	40	1,100	C12AA06WS	N12	L12
35.0	10	307	5/8	40	1,540	C58DG06TS	N16	L16
50.0	10	439	5/8	33	1,815	C58DG06TS	N19	L19
65.0	10	570	5/8	24	1,716	C58DG06TS	N18	L18
75.0	10	658	5/8	22	1,815	C58DG06TS	N19	L19
100.0	10	878	5/8	16	1,760	C58DG06TS	N18	L18
125.0	10	1,097	5/8	13	1,788	C58DG06TS	N18	L18
150.0	10	1,316	5/8	11	1,815	C58DG06TS	N19	L19

1. TVL = DL + Fv + ($0.2S_{DS}$/1.4 x Wp). All Terms Are Working Loads. Based On Eccentric Loading. 65% Of Total Load Allocated Per Rod.
2. Reductions In Actual Installed Brace Spacing Will Result In An Equal Percentage Reduction In Brace Reaction. As An Option When This Occurs ISAT May Substitute An Alternate Anchorage From Tables D1 or D2 Which Meets or Exceeds The Lowered Brace Reaction.
3. At Max. 50 Degree Brace Inclination.
4. Min. 3,000 psi NWC. Any "N Series" Connection May Be Utilized Having A Numeric Designation Equal To Or Higher Than That Shown.
5. Min. 3,000 psi NWC or LWC. Any "L Series" Connection May Be Utilized Having A Numeric Designation Equal To Or Higher Than That Shown.
6. As An Alternate, Brace Anchorage Connections To Structure May Be Employed Using Any Detail From Structural Connections Section "D" Series Details Where Assembly Design Value Meets Or Exceeds Brace Reaction.
7. For Trade Specific Bracing Installation Notes, Refer To Page 8.1 or 10.1.
8. Utilize Any "G" Series Vertical Support Connection Having A Design Value Equal To Or Greater Than The Corresponding "Rod Total Vertical Load".

REVIEWED FOR CODE COMPLIANCE
HCAI
OPM-0403
By: William Staehlin
DATE: 01-26-2024
CALIFORNIA BUILDING CODE, 2019

REGISTERED PROFESSIONAL ENGINEER MARCIN WASAZNIK S 6612 STRUCTURAL STATE OF CALIFORNIA

ISAT
A Division of Tomarco Contractor Specialties
International Seismic Application Technology
14848 Northam Street, La Mirada, CA 90638
877-999-4728 (Toll Free) 714-523-0845 (Fax)
www.isatsb.com

Rev. 1
03/12/19
Page
C18-0.5-45

4-WAY SPLAYED CABLE BRACING REQUIREMENTS [7]:

TRAPEZE MOUNTED PIPING (Plumbing, Mechanical, Process, Medical Gas) ***MAXIMUM SEISMIC DESIGN FORCE = 0.50 G's***

Requires Use of ISAT Seismic Brackets. *Use of Any Non-ISAT Bracket Voids Engineering.* *2013 California Building Code Compliant*

Maximum Trapeze Load (lbs/lf)	Max. Vertical Support Spacing (ft.)	Rod [1] Total Vertical Load (lbs)	Min.[8] Vertical Support Rod Dia. (in.)	4-WAY SPLAYED CABLE BRACING REQUIREMENTS				
				Max. [2] Brace Spacing (ft.)	Brace [3] Reaction P (lbs)	Min. Brace Assembly E - Pages	Min. Brace Anchorage [6] Form Pour [4] Deck Page D1	Min. Brace Anchorage [6] Metal [5] Deck Page D2
				4-Way Splayed Brace Pattern (B15.2)				
11.0	10	97	1/2	40	622	C12AA04WS	N7	L7
25.0	10	219	5/8	40	1,414	C58AA06WS	N15	L15
35.0	10	307	5/8	29	1,435	C58AA06WS	N15	L15
50.0	10	439	5/8	20	1,414	C58AA06WS	N15	L15
65.0	10	570	5/8	16	1,471	C58AA06WS	N15	L15
75.0	10	658	5/8	13	1,379	C58AA06WS	N14	L14
100.0	10	878	5/8	10	1,414	C58AA06WS	N15	L15

1. TVL = DL + Fv + ($0.2S_{DS}$/1.4 x Wp). All Terms Are Working Loads. Based On Eccentric Loading. 65% Of Total Load Allocated Per Rod.
2. Reductions In Actual Installed Brace Spacing Will Result In An Equal Percentage Reduction In Brace Reaction. As An Option When This Occurs ISAT May Substitute An Alternate Anchorage From Tables D1 or D2 Which Meets or Exceeds The Lowered Brace Reaction.
3. At Max. 60 Degree Brace Inclination.
4. Min. 3,000 psi NWC. Any "N Series" Connection May Be Utilized Having A Numeric Designation Equal To Or Higher Than That Shown.
5. Min. 3,000 psi NWC or LWC. Any "L Series" Connection May Be Utilized Having A Numeric Designation Equal To Or Higher Than That Shown.
6. As An Alternate, Brace Anchorage Connections To Structure May Be Employed Using Any Detail From Structural Connections Section "D" Series Details Where Assembly Design Value Meets Or Exceeds Brace Reaction.
7. For Trade Specific Bracing Installation Notes, Refer To Page 8.1 or 10.1.
8. Utilize Any "G" Series Vertical Support Connection Having A Design Value Equal To Or Greater Than The Corresponding "Rod Total Vertical Load".

REVIEWED FOR CODE COMPLIANCE
HCAI
OPM-0403
BY: William Staehlin
DATE: 01-26-2024
CALIFORNIA BUILDING CODE, 2019

REGISTERED PROFESSIONAL ENGINEER
MARCIN WASAZNIK
S 6612
STRUCTURAL
STATE OF CALIFORNIA

ISAT
A Division of Tomarco Contractor Specialties
International Seismic Application Technology
14848 Northam Street, La Mirada, CA 90638
877-999-4728 (Toll Free) 714-523-0845 (Fax)
www.isatsb.com

Rev. 1
03/12/19
Page
C18-0.5-60

4-WAY SPLAYED CABLE BRACING REQUIREMENTS [7]:

TRAPEZE MOUNTED PIPING (Plumbing, Mechanical, Process, Medical Gas) ***MAXIMUM SEISMIC DESIGN FORCE = 0.75 G's***

Requires Use of ISAT Seismic Brackets. *Use of Any Non-ISAT Bracket Voids Engineering.* *2013 California Building Code Compliant*

Maximum Trapeze Load (lbs/lf)	Max. Vertical Support Spacing (ft.)	Rod [1] Total Vertical Load (lbs)	Min.[8] Vertical Support Rod Dia. (in.)	4-WAY SPLAYED CABLE BRACING REQUIREMENTS				
				Max. [2] Brace Spacing (ft.)	Brace [3] Reaction P (lbs)	Min. Brace Assembly E - Pages	Min. Brace Anchorage [6] Form Pour [4] Deck Page D1	Min. Brace Anchorage [6] Metal [5] Deck Page D2
				4-Way Splayed Brace Pattern (B15.2)				
11.0	10	97	3/8	40	539	C38AA04WS	N6	L6
25.0	10	219	1/2	38	1,164	C12AA06WS	N12	L12
35.0	10	307	1/2	27	1,157	C12AA06WS	N12	L12
50.0	10	439	1/2	19	1,164	C12AA06WS	N12	L12
65.0	10	570	1/2	14	1,115	C12AA06WS	N12	L12
75.0	10	658	1/2	12	1,102	C12AA06WS	N12	L12
100.0	10	878	1/2	10	1,225	C12AA06WS	N13	L13

1. TVL = DL + Fv + ($0.2S_{DS}$/1.4 x Wp). All Terms Are Working Loads. Based On Eccentric Loading. 65% Of Total Load Allocated Per Rod.
2. Reductions In Actual Installed Brace Spacing Will Result In An Equal Percentage Reduction In Brace Reaction. As An Option When This Occurs ISAT May Substitute An Alternate Anchorage From Tables D1 or D2 Which Meets or Exceeds The Lowered Brace Reaction.
3. At Max. 30 Degree Brace Inclination.
4. Min. 3,000 psi NWC. Any "N Series" Connection May Be Utilized Having A Numeric Designation Equal To Or Higher Than That Shown.
5. Min. 3,000 psi NWC or LWC. Any "L Series" Connection May Be Utilized Having A Numeric Designation Equal To Or Higher Than That Shown.
6. As An Alternate, Brace Anchorage Connections To Structure May Be Employed Using Any Detail From Structural Connections Section "D" Series Details Where Assembly Design Value Meets Or Exceeds Brace Reaction.
7. For Trade Specific Bracing Installation Notes, Refer To Page 8.1 or 10.1.
8. Utilize Any "G" Series Vertical Support Connection Having A Design Value Equal To Or Greater Than The Corresponding "Rod Total Vertical Load".

REVIEWED FOR CODE COMPLIANCE
HCAI
OPM-0403
BY: William Staehlin
DATE: 01-26-2024
CALIFORNIA BUILDING CODE, 2019

REGISTERED PROFESSIONAL ENGINEER
MARCIN WASAZNIK
S 6612
STRUCTURAL
STATE OF CALIFORNIA

ISAT
A Division of Tomarco Contractor Specialties
International Seismic Application Technology
14848 Northam Street, La Mirada, CA 90638
877-999-4728 (Toll Free) 714-523-0845 (Fax)
www.isatsb.com

Rev. 1
03/12/19
Page
C18-0.75-30

4-WAY SPLAYED CABLE BRACING REQUIREMENTS [7]:

TRAPEZE MOUNTED PIPING (Plumbing, Mechanical, Process, Medical Gas) ***MAXIMUM SEISMIC DESIGN FORCE = 0.75 G's***

Requires Use of ISAT Seismic Brackets. Use of Any Non-ISAT Bracket Voids Engineering. 2013 California Building Code Compliant

Maximum Trapeze Load (lbs/lf)	Max. Vertical Support Spacing (ft.)	Rod [1] Total Vertical Load (lbs)	Min.[8] Vertical Support Rod Dia. (in.)	4-WAY SPLAYED CABLE BRACING REQUIREMENTS				
				Max. [2] Brace Spacing (ft.)	Brace [3] Reaction P (lbs)	Min. Brace Assembly E - Pages	Min. Brace Anchorage [6] Form Pour [4] Deck Page D1	Min. Brace Anchorage [6] Metal [5] Deck Page D2
				4-Way Splayed Brace Pattern (B15.2)				
11.0	10	97	1/2	40	726	C12AA06WS	N8	L8
25.0	10	219	5/8	40	1,650	C58DG06TS	N17	L17
35.0	10	307	5/8	31	1,790	C58DG06TS	N18	L18
50.0	10	439	5/8	22	1,815	C58DG06TS	N19	L19
65.0	10	570	5/8	17	1,823	C58DG06TS	N19	L19
75.0	10	658	5/8	14	1,733	C58DG06TS	N18	L18
100.0	10	878	5/8	11	1,815	C58DG06TS	N19	L19

1. TVL = DL + Fv + ($0.2S_{DS}$/1.4 x Wp). All Terms Are Working Loads. Based On Eccentric Loading. 65% Of Total Load Allocated Per Rod.
2. Reductions In Actual Installed Brace Spacing Will Result In An Equal Percentage Reduction In Brace Reaction. As An Option When This Occurs ISAT May Substitute An Alternate Anchorage From Tables D1 or D2 Which Meets or Exceeds The Lowered Brace Reaction.
3. At Max. 50 Degree Brace Inclination.
4. Min. 3,000 psi NWC. Any "N Series" Connection May Be Utilized Having A Numeric Designation Equal To Or Higher Than That Shown.
5. Min. 3,000 psi NWC or LWC. Any "L Series" Connection May Be Utilized Having A Numeric Designation Equal To Or Higher Than That Shown.
6. As An Alternate, Brace Anchorage Connections To Structure May Be Employed Using Any Detail From Structural Connections Section "D" Series Details Where Assembly Design Value Meets Or Exceeds Brace Reaction.
7. For Trade Specific Bracing Installation Notes, Refer To Page 8.1 or 10.1.
8. Utilize Any "G" Series Vertical Support Connection Having A Design Value Equal To Or Greater Than The Corresponding "Rod Total Vertical Load".

REVIEWED FOR CODE COMPLIANCE UNDER CALIFORNIA BUILDING CODE, 2019
HCAI OPM-0403
BY: William Staehlin
DATE: 01-26-2024

REGISTERED PROFESSIONAL ENGINEER MARCIN WASAZNIK S 6612 STRUCTURAL STATE OF CALIFORNIA

ISAT
A Division of Tomarco Contractor Specialties

International Seismic Application Technology
14848 Northam Street, La Mirada, CA 90638
877-999-4728 (Toll Free) 714-523-0845 (Fax)
www.isatsb.com

Rev. 1
03/12/19
Page
C18-0.75-45

4-WAY SPLAYED CABLE BRACING REQUIREMENTS [7]:

TRAPEZE MOUNTED PIPING (Plumbing, Mechanical, Process, Medical Gas) ***MAXIMUM SEISMIC DESIGN FORCE = 0.75 G's***

Requires Use of ISAT Seismic Brackets. *Use of Any Non-ISAT Bracket Voids Engineering.* *2013 California Building Code Compliant*

Maximum Trapeze Load (lbs/lf)	Max. Vertical Support Spacing (ft.)	Rod [1] Total Vertical Load (lbs)	Min.[8] Vertical Support Rod Dia. (in.)	4-WAY SPLAYED CABLE BRACING REQUIREMENTS				
				Max. [2] Brace Spacing (ft.)	Brace [3] Reaction P (lbs)	Min. Brace Assembly E - Pages	Min. Brace Anchorage [6] Form Pour [4] Deck Page D1	Min. Brace Anchorage [6] Metal [5] Deck Page D2
				4-Way Splayed Brace Pattern (B15.2)				
11.0	10	97	1/2	40	933	C12AA06WS	N10	L10
25.0	10	219	5/8	27	1,432	C58AA06WS	N15	L15
35.0	10	307	5/8	19	1,411	C58AA06WS	N15	L15
50.0	10	439	5/8	13	1,379	C58AA06WS	N14	L14
65.0	10	570	5/8	10	1,379	C58AA06WS	N14	L14

1. TVL = DL + Fv + ($0.2S_{DS}$/1.4 x Wp). All Terms Are Working Loads. Based On Eccentric Loading. 65% Of Total Load Allocated Per Rod.
2. Reductions In Actual Installed Brace Spacing Will Result In An Equal Percentage Reduction In Brace Reaction. As An Option When This Occurs ISAT May Substitute An Alternate Anchorage From Tables D1 or D2 Which Meets or Exceeds The Lowered Brace Reaction.
3. At Max. 60 Degree Brace Inclination.
4. Min. 3,000 psi NWC. Any "N Series" Connection May Be Utilized Having A Numeric Designation Equal To Or Higher Than That Shown.
5. Min. 3,000 psi NWC or LWC. Any "L Series" Connection May Be Utilized Having A Numeric Designation Equal To Or Higher Than That Shown.
6. As An Alternate, Brace Anchorage Connections To Structure May Be Employed Using Any Detail From Structural Connections Section "D" Series Details Where Assembly Design Value Meets Or Exceeds Brace Reaction.
7. For Trade Specific Bracing Installation Notes, Refer To Page 8.1 or 10.1.
8. Utilize Any "G" Series Vertical Support Connection Having A Design Value Equal To Or Greater Than The Corresponding "Rod Total Vertical Load".

REVIEWED FOR CODE COMPLIANCE
HCAI
OPM-0403
BY: William Staehlin
DATE: 01-26-2024
CALIFORNIA BUILDING CODE 2022

REGISTERED PROFESSIONAL ENGINEER
MARCIN WASAZNIK
S 6612
STRUCTURAL
STATE OF CALIFORNIA

ISAT
A Division of Tomarco Contractor Specialties

International Seismic Application Technology
14848 Northam Street, La Mirada, CA 90638
877-999-4728 (Toll Free) 714-523-0845 (Fax)
www.isatsb.com

Rev. 1
03/12/19
Page
C18-0.75-60

4-WAY SPLAYED CABLE BRACING REQUIREMENTS [7]:

TRAPEZE MOUNTED PIPING (Plumbing, Mechanical, Process, Medical Gas) ***MAXIMUM SEISMIC DESIGN FORCE = 1.00 G's***

Requires Use of ISAT Seismic Brackets. *Use of Any Non-ISAT Bracket Voids Engineering.* *2013 California Building Code Compliant*

Maximum Trapeze Load (lbs/lf)	Max. Vertical Support Spacing (ft.)	Rod [1] Total Vertical Load (lbs)	Min.[8] Vertical Support Rod Dia. (in.)	4-WAY SPLAYED CABLE BRACING REQUIREMENTS				
				Max. [2] Brace Spacing (ft.)	Brace [3] Reaction P (lbs)	Min. Brace Assembly E - Pages	Min. Brace Anchorage [6] Form Pour [4] Deck Page D1	Min. Brace Anchorage [6] Metal [5] Deck Page D2
				4-Way Splayed Brace Pattern (B15.2)				
11.0	10	97	3/8	40	719	C38AA06WS	N8	L8
25.0	10	219	1/2	29	1,184	C12AA06WS	N12	L12
35.0	10	307	1/2	20	1,143	C12AA06WS	N12	L12
50.0	10	439	1/2	14	1,143	C12AA06WS	N12	L12
65.0	10	570	1/2	11	1,168	C12AA06WS	N12	L12
75.0	10	658	1/2	10	1,225	C12AA06WS	N13	L13

1. TVL = DL + Fv + ($0.2S_{DS}$/1.4 x Wp). All Terms Are Working Loads. Based On Eccentric Loading. 65% Of Total Load Allocated Per Rod.
2. Reductions In Actual Installed Brace Spacing Will Result In An Equal Percentage Reduction In Brace Reaction. As An Option When This Occurs ISAT May Substitute An Alternate Anchorage From Tables D1 or D2 Which Meets or Exceeds The Lowered Brace Reaction.
3. At Max. 30 Degree Brace Inclination.
4. Min. 3,000 psi NWC. Any "N Series" Connection May Be Utilized Having A Numeric Designation Equal To Or Higher Than That Shown.
5. Min. 3,000 psi NWC or LWC. Any "L Series" Connection May Be Utilized Having A Numeric Designation Equal To Or Higher Than That Shown.
6. As An Alternate, Brace Anchorage Connections To Structure May Be Employed Using Any Detail From Structural Connections Section "D" Series Details Where Assembly Design Value Meets Or Exceeds Brace Reaction.
7. For Trade Specific Bracing Installation Notes, Refer To Page 8.1 or 10.1.
8. Utilize Any "G" Series Vertical Support Connection Having A Design Value Equal To Or Greater Than The Corresponding "Rod Total Vertical Load".

REVIEWED FOR CODE COMPLIANCE
HCAI
OPM-0403
BY: William Staehlin
DATE: 01-26-2024
CALIFORNIA BUILDING CODE, 2019

REGISTERED PROFESSIONAL ENGINEER
MARCIN WASAZNIK
S-6612
STRUCTURAL
STATE OF CALIFORNIA

ISAT
A Division of Tomarco Contractor Specialties
International Seismic Application Technology
14848 Northam Street, La Mirada, CA 90638
877-999-4728 (Toll Free) 714-523-0845 (Fax)
www.isatsb.com

Rev. 1
03/12/19
Page
C18-1-30

4-WAY SPLAYED CABLE BRACING REQUIREMENTS [7]:

TRAPEZE MOUNTED PIPING (Plumbing, Mechanical, Process, Medical Gas) ***MAXIMUM SEISMIC DESIGN FORCE = 1.00 G's***

Requires Use of ISAT Seismic Brackets. Use of Any Non-ISAT Bracket Voids Engineering. 2013 California Building Code Compliant

Maximum Trapeze Load (lbs/lf)	Max. Vertical Support Spacing (ft.)	Rod [1] Total Vertical Load (lbs)	Min. [8] Vertical Support Rod Dia. (in.)	4-WAY SPLAYED CABLE BRACING REQUIREMENTS				
				Max. [2] Brace Spacing (ft.)	Brace [3] Reaction P (lbs)	Min. Brace Assembly E - Pages	Min. Brace Anchorage [6] Form Pour [4] Deck Page D1	Min. Brace Anchorage [6] Metal [5] Deck Page D2
				4-Way Splayed Brace Pattern (B15.2)				
11.0	10	97	1/2	40	968	C12AA06WS	N10	L10
25.0	10	219	5/8	33	1,815	C58DG06TS	N19	L19
35.0	10	307	5/8	23	1,771	C58DG06TS	N18	L18
50.0	10	439	5/8	16	1,760	C58DG06TS	N18	L18
65.0	10	570	5/8	12	1,716	C58DG06TS	N18	L18
75.0	10	658	5/8	11	1,815	C58DG06TS	N19	L19

1. TVL = DL + Fv + ($0.2S_{DS}$/1.4 x Wp). All Terms Are Working Loads. Based On Eccentric Loading. 65% Of Total Load Allocated Per Rod.
2. Reductions In Actual Installed Brace Spacing Will Result In An Equal Percentage Reduction In Brace Reaction. As An Option When This Occurs ISAT May Substitute An Alternate Anchorage From Tables D1 or D2 Which Meets or Exceeds The Lowered Brace Reaction.
3. At Max. 50 Degree Brace Inclination.
4. Min. 3,000 psi NWC. Any "N Series" Connection May Be Utilized Having A Numeric Designation Equal To Or Higher Than That Shown.
5. Min. 3,000 psi NWC or LWC. Any "L Series" Connection May Be Utilized Having A Numeric Designation Equal To Or Higher Than That Shown.
6. As An Alternate, Brace Anchorage Connections To Structure May Be Employed Using Any Detail From Structural Connections Section "D" Series Details Where Assembly Design Value Meets Or Exceeds Brace Reaction.
7. For Trade Specific Bracing Installation Notes, Refer To Page 8.1 or 10.1.
8. Utilize Any "G" Series Vertical Support Connection Having A Design Value Equal To Or Greater Than The Corresponding "Rod Total Vertical Load".

REVIEWED FOR CODE COMPLIANCE
HCAI
OPM-0403
BY: William Staehlin
DATE: 01-26-2024
CALIFORNIA BUILDING CODE, 2019

REGISTERED PROFESSIONAL ENGINEER MARCIN WASAZNIK S-6612 STRUCTURAL STATE OF CALIFORNIA

ISAT
A Division of Tomarco Contractor Specialties
International Seismic Application Technology
14848 Northam Street, La Mirada, CA 90638
877-999-4728 (Toll Free) 714-523-0845 (Fax)
www.isatsb.com

Rev. 1
03/12/19
Page
C18-1-45

4-WAY SPLAYED CABLE BRACING REQUIREMENTS [7]:

TRAPEZE MOUNTED PIPING (Plumbing, Mechanical, Process, Medical Gas) ***MAXIMUM SEISMIC DESIGN FORCE = 1.00 G's***

Requires Use of ISAT Seismic Brackets. Use of Any Non-ISAT Bracket Voids Engineering. 2013 California Building Code Compliant

Maximum Trapeze Load (lbs/lf)	Max. Vertical Support Spacing (ft.)	Rod [1] Total Vertical Load (lbs)	Min. [8] Vertical Support Rod Dia. (in.)	4-WAY SPLAYED CABLE BRACING REQUIREMENTS				
				Max. [2] Brace Spacing (ft.)	Brace [3] Reaction P (lbs)	Min. Brace Assembly E - Pages	Min. Brace Anchorage [6] Form Pour [4] Deck Page D1	Min. Brace Anchorage [6] Metal [5] Deck Page D2
				4-Way Splayed Brace Pattern (B15.2)				
11.0	10	97	5/8	40	1,245	C58AA06WS	N13	L13
25.0	10	219	5/8	20	1,414	C58AA06WS	N15	L15
35.0	10	307	5/8	14	1,386	C58AA06WS	N14	L14
50.0	10	439	5/8	10	1,414	C58AA06WS	N15	L15

1. TVL = DL + Fv + ($0.2S_{DS}$/1.4 x Wp). All Terms Are Working Loads. Based On Eccentric Loading. 65% Of Total Load Allocated Per Rod.
2. Reductions In Actual Installed Brace Spacing Will Result In An Equal Percentage Reduction In Brace Reaction. As An Option When This Occurs ISAT May Substitute An Alternate Anchorage From Tables D1 or D2 Which Meets or Exceeds The Lowered Brace Reaction.
3. At Max. 60 Degree Brace Inclination.
4. Min. 3,000 psi NWC. Any "N Series" Connection May Be Utilized Having A Numeric Designation Equal To Or Higher Than That Shown.
5. Min. 3,000 psi NWC or LWC. Any "L Series" Connection May Be Utilized Having A Numeric Designation Equal To Or Higher Than That Shown.
6. As An Alternate, Brace Anchorage Connections To Structure May Be Employed Using Any Detail From Structural Connections Section "D" Series Details Where Assembly Design Value Meets Or Exceeds Brace Reaction.
7. For Trade Specific Bracing Installation Notes, Refer To Page 8.1 or 10.1.
8. Utilize Any "G" Series Vertical Support Connection Having A Design Value Equal To Or Greater Than The Corresponding "Rod Total Vertical Load".

REVIEWED FOR CODE COMPLIANCE
OPM-0403
BY: William Staehlin
DATE: 01-26-2024
CALIFORNIA BUILDING CODE 2022

REGISTERED PROFESSIONAL ENGINEER
MARCIN WASAZNIK
S 6612
STRUCTURAL
STATE OF CALIFORNIA

ISAT
A Division of Tomarco Contractor Specialties

International Seismic Application Technology
14848 Northam Street, La Mirada, CA 90638
877-999-4728 (Toll Free) 714-523-0845 (Fax)
www.isatsb.com

Rev. 1
03/12/19
Page
C18-1-60

4-WAY SPLAYED CABLE BRACING REQUIREMENTS [7] :

2-TIERED TRAPEZE MOUNTED PIPING (Plumbing, Mechanical, Process, Medical Gas) ***MAXIMUM SEISMIC DESIGN FORCE = 0.25 G's***

Requires Use of ISAT Seismic Brackets. *Use of Any Non-ISAT Bracket Voids Engineering.* *2013 California Building Code Compliant*

Combined 2-Tier Maximum Trapeze Load (lbs/lf)	Max. Vertical Support Spacing (ft.)	Rod [1] Total Vertical Load (lbs)	Min. [8] Vertical Support Rod Dia. (in.)	4-WAY SPLAYED CABLE BRACING REQUIREMENTS				
				Max. [2] Brace Spacing (ft.)	Brace [3] Reaction P (lbs)	Min. Brace Assembly E - Pages	Min. Brace Anchorage [6] Form Pour [4] Deck Page D1	Min. Brace Anchorage [6] Metal [5] Deck Page D2
				4-Way Splayed Brace Pattern (B16.2)				
11.0	10	97	3/8	40	90	C38AA04WS	N1	L1
25.0	10	219	1/2	40	204	C12AA04WS	N3	L3
35.0	10	307	1/2	40	286	C12AA04WS	N3	L3
50.0	10	439	1/2	40	408	C12AA04WS	N5	L5
65.0	10	570	1/2	40	531	C12AA04WS	N6	L6
75.0	10	658	1/2	40	612	C12AA04WS	N7	L7
100.0	10	878	1/2	40	816	C12AA06WS	N9	L9
125.0	10	1,097	1/2	40	1,021	C12AA06WS	N11	L11
150.0	10	1,316	5/8	38	1,164	C58AA06WS	N12	L12
175.0	10	1,536	5/8	33	1,179	C58AA06WS	N12	L12
200.0	10	1,755	5/8	29	1,184	C58AA06WS	N12	L12
225.0	10	1,974	5/8	25	1,148	C58AA06WS	N12	L12

1. TVL = DL + Fv + ($0.2S_{DS}$/1.4 x Wp). All Terms Are Working Loads. Based On Eccentric Loading. 65% Of Total Load Allocated Per Rod.
2. Reductions In Actual Installed Brace Spacing Will Result In An Equal Percentage Reduction In Brace Reaction. As An Option When This Occurs ISAT May Substitute An Alternate Anchorage From Tables D1 or D2 Which Meets or Exceeds The Lowered Brace Reaction.
3. At Max. 30 Degree Brace Inclination. Assumes 50% Of Total Trapeze Load Per Tier.
4. Min. 3,000 psi NWC. Any "N Series" Connection May Be Utilized Having A Numeric Designation Equal To Or Higher Than That Shown.
5. Min. 3,000 psi NWC or LWC. Any "L Series" Connection May Be Utilized Having A Numeric Designation Equal To Or Higher Than That Shown.
6. As An Alternate, Brace Anchorage Connections To Structure May Be Employed Using Any Detail From Structural Connections Section "D" Series Details Where Assembly Design Value Meets Or Exceeds Brace Reaction.
7. For Trade Specific Bracing Installation Notes, Refer To Page 8.1 or 10.1.
8. Utilize Any "G" Series Vertical Support Connection Having A Design Value Equal To Or Greater Than The Corresponding "Rod Total Vertical Load".

REVIEWED FOR CODE COMPLIANCE
HCAi
OPM 0403
BY: William Staehlin
DATE: 01-26-2024
CALIFORNIA BUILDING CODE, 2022

REGISTERED PROFESSIONAL ENGINEER
MARCIN WASAZNIK
S 6612
STRUCTURAL
STATE OF CALIFORNIA

ISAT
A Division of Tomarco Contractor Specialties
International Seismic Application Technology
14848 Northam Street, La Mirada, CA 90638
877-999-4728 (Toll Free) 714-523-0845 (Fax)
www.isatsb.com

Rev. 0
03/12/19
Page
C18-0.25-30
2-Tier

4-WAY SPLAYED CABLE BRACING REQUIREMENTS [7] :

2-TIERED TRAPEZE MOUNTED PIPING (Plumbing, Mechanical, Process, Medical Gas) ***MAXIMUM SEISMIC DESIGN FORCE = 0.25 G's***

Requires Use of ISAT Seismic Brackets. *Use of Any Non-ISAT Bracket Voids Engineering.* *2013 California Building Code Compliant*

Combined 2-Tier Maximum Trapeze Load (lbs/lf)	Max. Vertical Support Spacing (ft.)	Rod [1] Total Vertical Load (lbs)	Min. [8] Vertical Support Rod Dia. (in.)	4-WAY SPLAYED CABLE BRACING REQUIREMENTS				
				Max. [2] Brace Spacing (ft.)	Brace [3] Reaction P (lbs)	Min. Brace Assembly E - Pages	Min. Brace Anchorage [6] Form Pour [4] Deck Page D1	Min. Brace Anchorage [6] Metal [5] Deck Page D2
				4-Way Splayed Brace Pattern (B16.2)				
11.0	10	97	3/8	40	121	C38AA04WS	N2	L2
25.0	10	219	1/2	40	275	C12AA04WS	N3	L3
35.0	10	307	1/2	40	385	C12AA04WS	N4	L4
50.0	10	439	1/2	40	550	C12AA04WS	N6	L6
65.0	10	570	5/8	40	715	C58AA06WS	N8	L8
75.0	10	658	5/8	40	825	C58AA06WS	N9	L9
100.0	10	878	3/4	40	1,100	C34DG06WS	N12	L12
125.0	10	1,097	3/4	38	1,306	C34DG06WS	N14	L14
150.0	10	1,316	3/4	32	1,320	C34DG06WS	N14	L14
175.0	10	1,536	3/4	26	1,251	C34DG06WS	N13	L13
200.0	10	1,755	3/4	24	1,320	C34DG06WS	N14	L14
225.0	10	1,974	3/4	22	1,361	C34DG06WS	N14	L14

1. TVL = DL + Fv + ($0.2S_{DS}$/1.4 x Wp). All Terms Are Working Loads. Based On Eccentric Loading. 65% Of Total Load Allocated Per Rod.
2. Reductions In Actual Installed Brace Spacing Will Result In An Equal Percentage Reduction In Brace Reaction. As An Option When This Occurs ISAT May Substitute An Alternate Anchorage From Tables D1 or D2 Which Meets or Exceeds The Lowered Brace Reaction.
3. At Max. 50 Degree Brace Inclination. Assumes 50% Of Total Trapeze Load Per Tier.
4. Min. 3,000 psi NWC. Any "N Series" Connection May Be Utilized Having A Numeric Designation Equal To Or Higher Than That Shown.
5. Min. 3,000 psi NWC or LWC. Any "L Series" Connection May Be Utilized Having A Numeric Designation Equal To Or Higher Than That Shown.
6. As An Alternate, Brace Anchorage Connections To Structure May Be Employed Using Any Detail From Structural Connections Section "D" Series Details Where Assembly Design Value Meets Or Exceeds Brace Reaction.
7. For Trade Specific Bracing Installation Notes, Refer To Page 8.1 or 10.1.
8. Utilize Any "G" Series Vertical Support Connection Having A Design Value Equal To Or Greater Than The Corresponding "Rod Total Vertical Load".

REVIEWED FOR CODE COMPLIANCE
HCAI
OPM_0403
BY: William Staehlin
DATE: 01-26-2024
CALIFORNIA BUILDING CODE, 2022

REGISTERED PROFESSIONAL ENGINEER MARCIN WASAZNIK S-6612 STRUCTURAL STATE OF CALIFORNIA

ISAT
A Division of Tomarco Contractor Specialties
International Seismic Application Technology
14848 Northam Street, La Mirada, CA 90638
877-999-4728 (Toll Free) 714-523-0845 (Fax)
www.isatsb.com

Rev. 0
03/12/19
Page
C18-0.25-45
2-Tier

4-WAY SPLAYED CABLE BRACING REQUIREMENTS [7] :

2-TIERED TRAPEZE MOUNTED PIPING (Plumbing, Mechanical, Process, Medical Gas) ***MAXIMUM SEISMIC DESIGN FORCE = 0.25 G's***

Requires Use of ISAT Seismic Brackets. Use of Any Non-ISAT Bracket Voids Engineering. 2013 California Building Code Compliant

Combined 2-Tier Maximum Trapeze Load (lbs/lf)	Max. Vertical Support Spacing (ft.)	Rod [1] Total Vertical Load (lbs)	Min. [8] Vertical Support Rod Dia. (in.)	4-WAY SPLAYED CABLE BRACING REQUIREMENTS				
				Max. [2] Brace Spacing (ft.)	Brace [3] Reaction P (lbs)	Min. Brace Assembly E - Pages	Min. Brace Anchorage [6] Form Pour [4] Deck Page D1	Min. Brace Anchorage [6] Metal [5] Deck Page D2
				4-Way Splayed Brace Pattern (B16.2)				
11.0	10	97	3/8	40	156	C38AA04WS	N2	L2
25.0	10	219	1/2	40	354	C12AA04WS	N4	L4
35.0	10	307	1/2	40	495	C12AA04WS	N5	L5
50.0	10	439	5/8	40	707	C58AA06WS	N8	L8
65.0	10	570	3/4	40	919	C34DG06WS	N10	L10
75.0	10	658	3/4	40	1,061	C34DG06WS	N11	L11
100.0	10	878	3/4	32	1,131	C34DG06WS	N12	L12
125.0	10	1,097	3/4	26	1,149	C34DG06WS	N12	L12
150.0	10	1,316	3/4	22	1,167	C34DG06WS	N12	L12
175.0	10	1,536	3/4	19	1,176	C34DG06WS	N12	L12
200.0	10	1,755	3/4	16	1,131	C34DG06WS	N12	L12
225.0	10	1,974	3/4	15	1,193	C34DG06WS	N12	L12

1. TVL = DL + Fv + ($0.2S_{DS}$/1.4 x Wp). All Terms Are Working Loads. Based On Eccentric Loading. 65% Of Total Load Allocated Per Rod.
2. Reductions In Actual Installed Brace Spacing Will Result In An Equal Percentage Reduction In Brace Reaction. As An Option When This Occurs ISAT May Substitute An Alternate Anchorage From Tables D1 or D2 Which Meets or Exceeds The Lowered Brace Reaction.
3. At Max. 60 Degree Brace Inclination. Assumes 50% Of Total Trapeze Load Per Tier.
4. Min. 3,000 psi NWC. Any "N Series" Connection May Be Utilized Having A Numeric Designation Equal To Or Higher Than That Shown.
5. Min. 3,000 psi NWC or LWC. Any "L Series" Connection May Be Utilized Having A Numeric Designation Equal To Or Higher Than That Shown.
6. As An Alternate, Brace Anchorage Connections To Structure May Be Employed Using Any Detail From Structural Connections Section "D" Series Details Where Assembly Design Value Meets Or Exceeds Brace Reaction.
7. For Trade Specific Bracing Installation Notes, Refer To Page 8.1 or 10.1.
8. Utilize Any "G" Series Vertical Support Connection Having A Design Value Equal To Or Greater Than The Corresponding "Rod Total Vertical Load".

REVIEWED FOR CODE COMPLIANCE
HCAI
OPM 0403
BY: William Staehlin
DATE: 01-26-2024
CALIFORNIA BUILDING CODE 2022

REGISTERED PROFESSIONAL ENGINEER
MARCIN WASAZNIK
S-6612
STRUCTURAL
STATE OF CALIFORNIA

ISAT
A Division of Tomarco Contractor Specialties

International Seismic Application Technology
14848 Northam Street, La Mirada, CA 90638
877-999-4728 (Toll Free) 714-523-0845 (Fax)
www.isatsb.com

Rev. 0
03/12/19
Page
C18-0.25-60
2-Tier

4-WAY SPLAYED CABLE BRACING REQUIREMENTS [7] :

2-TIERED TRAPEZE MOUNTED PIPING (Plumbing, Mechanical, Process, Medical Gas) ***MAXIMUM SEISMIC DESIGN FORCE = 0.50 G's***

Requires Use of ISAT Seismic Brackets. Use of Any Non-ISAT Bracket Voids Engineering. 2013 California Building Code Compliant

Combined 2-Tier Maximum Trapeze Load (lbs/lf)	Max. Vertical Support Spacing (ft.)	Rod [1] Total Vertical Load (lbs)	Min. [8] Vertical Support Rod Dia. (in.)	4-WAY SPLAYED CABLE BRACING REQUIREMENTS				
				Max. [2] Brace Spacing (ft.)	Brace [3] Reaction P (lbs)	Min. Brace Assembly E - Pages	Min. Brace Anchorage [6] Form Pour [4] Deck Page D1	Min. Brace Anchorage [6] Metal [5] Deck Page D2
				4-Way Splayed Brace Pattern (B16.2)				
11.0	10	97	3/8	40	180	C38AA04WS	N2	L2
25.0	10	219	1/2	40	408	C12AA04WS	N5	L5
35.0	10	307	1/2	40	572	C12AA04WS	N6	L6
50.0	10	439	1/2	40	816	C12AA06WS	N9	L9
65.0	10	570	5/8	40	1,061	C58AA06WS	N11	L11
75.0	10	658	5/8	38	1,164	C58AA06WS	N12	L12
100.0	10	878	5/8	29	1,184	C58AA06WS	N12	L12
125.0	10	1,097	5/8	23	1,174	C58AA06WS	N12	L12
150.0	10	1,316	5/8	19	1,164	C58AA06WS	N12	L12
175.0	10	1,536	5/8	16	1,143	C58AA06WS	N12	L12
200.0	10	1,755	5/8	14	1,143	C58AA06WS	N12	L12
225.0	10	1,974	5/8	12	1,102	C58AA06WS	N12	L12

1. TVL = DL + Fv + ($0.2S_{DS}$/1.4 x Wp). All Terms Are Working Loads. Based On Eccentric Loading. 65% Of Total Load Allocated Per Rod.
2. Reductions In Actual Installed Brace Spacing Will Result In An Equal Percentage Reduction In Brace Reaction. As An Option When This Occurs ISAT May Substitute An Alternate Anchorage From Tables D1 or D2 Which Meets or Exceeds The Lowered Brace Reaction.
3. At Max. 30 Degree Brace Inclination. Assumes 50% Of Total Trapeze Load Per Tier.
4. Min. 3,000 psi NWC. Any "N Series" Connection May Be Utilized Having A Numeric Designation Equal To Or Higher Than That Shown.
5. Min. 3,000 psi NWC or LWC. Any "L Series" Connection May Be Utilized Having A Numeric Designation Equal To Or Higher Than That Shown.
6. As An Alternate, Brace Anchorage Connections To Structure May Be Employed Using Any Detail From Structural Connections Section "D" Series Details Where Assembly Design Value Meets Or Exceeds Brace Reaction.
7. For Trade Specific Bracing Installation Notes, Refer To Page 8.1 or 10.1.
8. Utilize Any "G" Series Vertical Support Connection Having A Design Value Equal To Or Greater Than The Corresponding "Rod Total Vertical Load".

REVIEWED FOR CODE COMPLIANCE
HCAI
OPM 0403
BY: William Staehlin
DATE: 01-26-2024
CALIFORNIA BUILDING CODE, 2022

REGISTERED PROFESSIONAL ENGINEER MARCIN WASAZNIK S-6612 STRUCTURAL STATE OF CALIFORNIA

ISAT
A Division of Tomarco Contractor Specialties
International Seismic Application Technology
14848 Northam Street, La Mirada, CA 90638
877-999-4728 (Toll Free) 714-523-0845 (Fax)
www.isatsb.com

Rev. 0
03/12/19
Page
C18-0.5-30
2-Tier

4-WAY SPLAYED CABLE BRACING REQUIREMENTS [7] :

2-TIERED TRAPEZE MOUNTED PIPING (Plumbing, Mechanical, Process, Medical Gas) ***MAXIMUM SEISMIC DESIGN FORCE = 0.50 G's***

Requires Use of ISAT Seismic Brackets. Use of Any Non-ISAT Bracket Voids Engineering. 2013 California Building Code Compliant

Combined 2-Tier Maximum Trapeze Load (lbs/lf)	Max. Vertical Support Spacing (ft.)	Rod [1] Total Vertical Load (lbs)	Min. [8] Vertical Support Rod Dia. (in.)	4-WAY SPLAYED CABLE BRACING REQUIREMENTS				
				Max. [2] Brace Spacing (ft.)	Brace [3] Reaction P (lbs)	Min. Brace Assembly E - Pages	Min. Brace Anchorage [6] Form Pour [4] Deck Page D1	Min. Brace Anchorage [6] Metal [5] Deck Page D2
				4-Way Splayed Brace Pattern (B16.2)				
11.0	10	97	3/8	40	242	C38AA04WS	N3	L3
25.0	10	219	1/2	40	550	C12AA04WS	N6	L6
35.0	10	307	5/8	40	770	C58AA06WS	N8	L8
50.0	10	439	3/4	40	1,100	C34DG06WS	N12	L12
65.0	10	570	3/4	35	1,251	C34DG06WS	N13	L13
75.0	10	658	3/4	30	1,238	C34DG06WS	N13	L13
100.0	10	878	3/4	22	1,210	C34DG06WS	N13	L13
125.0	10	1,097	3/4	18	1,238	C34DG06WS	N13	L13
150.0	10	1,316	3/4	14	1,155	C34DG06WS	N12	L12
175.0	10	1,536	3/4	12	1,155	C34DG06WS	N12	L12
200.0	10	1,755	3/4	12	1,320	C34DG06WS	N14	L14
225.0	10	1,974	3/4	11	1,361	C34DG06WS	N14	L14

1. TVL = DL + Fv + ($0.2S_{DS}$/1.4 x Wp). All Terms Are Working Loads. Based On Eccentric Loading. 65% Of Total Load Allocated Per Rod.
2. Reductions In Actual Installed Brace Spacing Will Result In An Equal Percentage Reduction In Brace Reaction. As An Option When This Occurs ISAT May Substitute An Alternate Anchorage From Tables D1 or D2 Which Meets or Exceeds The Lowered Brace Reaction.
3. At Max. 50 Degree Brace Inclination. Assumes 50% Of Total Trapeze Load Per Tier.
4. Min. 3,000 psi NWC. Any "N Series" Connection May Be Utilized Having A Numeric Designation Equal To Or Higher Than That Shown.
5. Min. 3,000 psi NWC or LWC. Any "L Series" Connection May Be Utilized Having A Numeric Designation Equal To Or Higher Than That Shown.
6. As An Alternate, Brace Anchorage Connections To Structure May Be Employed Using Any Detail From Structural Connections Section "D" Series Details Where Assembly Design Value Meets Or Exceeds Brace Reaction.
7. For Trade Specific Bracing Installation Notes, Refer To Page 8.1 or 10.1.
8. Utilize Any "G" Series Vertical Support Connection Having A Design Value Equal To Or Greater Than The Corresponding "Rod Total Vertical Load".

REVIEWED FOR CODE COMPLIANCE
HCAI
OPM_0403
BY: William Staehlin
DATE: 01-26-2024
CALIFORNIA BUILDING CODE, 2022

REGISTERED PROFESSIONAL ENGINEER
MARCIN WASAZNIK
S-6612
STRUCTURAL
STATE OF CALIFORNIA

ISAT
A Division of Tomarco Contractor Specialties
International Seismic Application Technology
14848 Northam Street, La Mirada, CA 90638
877-999-4728 (Toll Free) 714-523-0845 (Fax)
www.isatsb.com

Rev. 0
03/12/19
Page
C18-0.5-45
2-Tier

4-WAY SPLAYED CABLE BRACING REQUIREMENTS [7] :

2-TIERED TRAPEZE MOUNTED PIPING (Plumbing, Mechanical, Process, Medical Gas) ***MAXIMUM SEISMIC DESIGN FORCE = 0.50 G's***

Requires Use of ISAT Seismic Brackets. Use of Any Non-ISAT Bracket Voids Engineering. 2013 California Building Code Compliant

Combined 2-Tier Maximum Trapeze Load (lbs/lf)	Max. Vertical Support Spacing (ft.)	Rod [1] Total Vertical Load (lbs)	Min. [8] Vertical Support Rod Dia. (in.)	4-WAY SPLAYED CABLE BRACING REQUIREMENTS				
				Max. [2] Brace Spacing (ft.)	Brace [3] Reaction P (lbs)	Min. Brace Assembly E - Pages	Min. Brace Anchorage [6] Form Pour [4] Deck Page D1	Min. Brace Anchorage [6] Metal [5] Deck Page D2
				4-Way Splayed Brace Pattern (B16.2)				
11.0	10	97	1/2	40	311	C12AA04WS	N4	L4
25.0	10	219	5/8	40	707	C58AA06WS	N8	L8
35.0	10	307	3/4	40	990	C34DG06WS	N10	L10
50.0	10	439	3/4	31	1,096	C34DG06WS	N11	L11
65.0	10	570	3/4	24	1,103	C34DG06WS	N12	L12
75.0	10	658	3/4	21	1,114	C34DG06WS	N12	L12
100.0	10	878	3/4	16	1,131	C34DG06WS	N12	L12
125.0	10	1,097	3/4	13	1,149	C34DG06WS	N12	L12
150.0	10	1,316	3/4	11	1,167	C34DG06WS	N12	L12

1. TVL = DL + Fv + ($0.2S_{DS}$/1.4 x Wp). All Terms Are Working Loads. Based On Eccentric Loading. 65% Of Total Load Allocated Per Rod.
2. Reductions In Actual Installed Brace Spacing Will Result In An Equal Percentage Reduction In Brace Reaction. As An Option When This Occurs ISAT May Substitute An Alternate Anchorage From Tables D1 or D2 Which Meets or Exceeds The Lowered Brace Reaction.
3. At Max. 60 Degree Brace Inclination. Assumes 50% Of Total Trapeze Load Per Tier.
4. Min. 3,000 psi NWC. Any "N Series" Connection May Be Utilized Having A Numeric Designation Equal To Or Higher Than That Shown.
5. Min. 3,000 psi NWC or LWC. Any "L Series" Connection May Be Utilized Having A Numeric Designation Equal To Or Higher Than That Shown.
6. As An Alternate, Brace Anchorage Connections To Structure May Be Employed Using Any Detail From Structural Connections Section "D" Series Details Where Assembly Design Value Meets Or Exceeds Brace Reaction.
7. For Trade Specific Bracing Installation Notes, Refer To Page 8.1 or 10.1.
8. Utilize Any "G" Series Vertical Support Connection Having A Design Value Equal To Or Greater Than The Corresponding "Rod Total Vertical Load".

REVIEWED FOR CODE COMPLIANCE
HCAI
OPM 0403
BY: William Staehlin
DATE: 01-26-2024
CALIFORNIA BUILDING CODE

REGISTERED PROFESSIONAL ENGINEER
MARCIN WASAZNIK
S-6612
STRUCTURAL
STATE OF CALIFORNIA

ISAT
A Division of Tomarco Contractor Specialties

International Seismic Application Technology
14848 Northam Street, La Mirada, CA 90638
877-999-4728 (Toll Free) 714-523-0845 (Fax)
www.isatsb.com

Rev. 0
03/12/19
Page
C18-0.5-60
2-Tier

4-WAY SPLAYED CABLE BRACING REQUIREMENTS [7] :

2-TIERED TRAPEZE MOUNTED PIPING (Plumbing, Mechanical, Process, Medical Gas) ***MAXIMUM SEISMIC DESIGN FORCE = 0.75 G's***

Requires Use of ISAT Seismic Brackets. *Use of Any Non-ISAT Bracket Voids Engineering.* *2013 California Building Code Compliant*

Combined 2-Tier Maximum Trapeze Load (lbs/lf)	Max. Vertical Support Spacing (ft.)	Rod [1] Total Vertical Load (lbs)	Min. [8] Vertical Support Rod Dia. (in.)	4-WAY SPLAYED CABLE BRACING REQUIREMENTS				
				Max. [2] Brace Spacing (ft.)	Brace [3] Reaction P (lbs)	Min. Brace Assembly E - Pages	Min. Brace Anchorage [6] Form Pour [4] Deck Page D1	Min. Brace Anchorage [6] Metal [5] Deck Page D2
				4-Way Splayed Brace Pattern (B16.2)				
11.0	10	97	3/8	40	269	C38AA04WS	N3	L3
25.0	10	219	1/2	40	612	C12AA04WS	N7	L7
35.0	10	307	1/2	40	857	C12AA06WS	N9	L9
50.0	10	439	5/8	38	1,164	C58AA06WS	N12	L12
65.0	10	570	5/8	29	1,154	C58AA06WS	N12	L12
75.0	10	658	5/8	25	1,148	C58AA06WS	N12	L12
100.0	10	878	5/8	19	1,164	C58AA06WS	N12	L12
125.0	10	1,097	5/8	15	1,148	C58AA06WS	N12	L12
150.0	10	1,316	1/2	12	1,102	C12AA06WS	N12	L12
175.0	10	1,536	5/8	11	1,179	C58AA06WS	N12	L12
200.0	10	1,755	5/8	10	1,225	C58AA06WS	N13	L13
225.0	10	1,974	5/8	10	1,378	C58AA06WS	N14	L14

1. TVL = DL + Fv + ($0.2S_{DS}$/1.4 x Wp). All Terms Are Working Loads. Based On Eccentric Loading. 65% Of Total Load Allocated Per Rod.
2. Reductions In Actual Installed Brace Spacing Will Result In An Equal Percentage Reduction In Brace Reaction. As An Option When This Occurs ISAT May Substitute An Alternate Anchorage From Tables D1 or D2 Which Meets or Exceeds The Lowered Brace Reaction.
3. At Max. 30 Degree Brace Inclination. Assumes 50% Of Total Trapeze Load Per Tier.
4. Min. 3,000 psi NWC. Any "N Series" Connection May Be Utilized Having A Numeric Designation Equal To Or Higher Than That Shown.
5. Min. 3,000 psi NWC or LWC. Any "L Series" Connection May Be Utilized Having A Numeric Designation Equal To Or Higher Than That Shown.
6. As An Alternate, Brace Anchorage Connections To Structure May Be Employed Using Any Detail From Structural Connections Section "D" Series Details Where Assembly Design Value Meets Or Exceeds Brace Reaction.
7. For Trade Specific Bracing Installation Notes, Refer To Page 8.1 or 10.1.
8. Utilize Any "G" Series Vertical Support Connection Having A Design Value Equal To Or Greater Than The Corresponding "Rod Total Vertical Load".

REVIEWED FOR CODE COMPLIANCE
HCAI
OPM 0403
BY: William Staehlin
DATE: 01-26-2024
CALIFORNIA BUILDING CODE, 2022

REGISTERED PROFESSIONAL ENGINEER MARCIN WASAZNIK S 6612 STRUCTURAL STATE OF CALIFORNIA

ISAT
A Division of Tomarco Contractor Specialties
International Seismic Application Technology
14848 Northam Street, La Mirada, CA 90638
877-999-4728 (Toll Free) 714-523-0845 (Fax)
www.isatsb.com

Rev. 0
03/12/19
Page
C18-0.75-30
2-Tier

4-WAY SPLAYED CABLE BRACING REQUIREMENTS [7] :

2-TIERED TRAPEZE MOUNTED PIPING (Plumbing, Mechanical, Process, Medical Gas) ***MAXIMUM SEISMIC DESIGN FORCE = 0.75 G's***

Requires Use of ISAT Seismic Brackets. *Use of Any Non-ISAT Bracket Voids Engineering.* *2013 California Building Code Compliant*

Combined 2-Tier Maximum Trapeze Load (lbs/lf)	Max. Vertical Support Spacing (ft.)	Rod [1] Total Vertical Load (lbs)	Min. [8] Vertical Support Rod Dia. (in.)	4-WAY SPLAYED CABLE BRACING REQUIREMENTS				
				Max. [2] Brace Spacing (ft.)	Brace [3] Reaction P (lbs)	Min. Brace Assembly E - Pages	Min. Brace Anchorage [6] Form Pour [4] Deck Page D1	Min. Brace Anchorage [6] Metal [5] Deck Page D2
				4-Way Splayed Brace Pattern (B16.2)				
11.0	10	97	1/2	40	363	C12AA04WS	N4	L4
25.0	10	219	5/8	40	825	C58AA06WS	N9	L9
35.0	10	307	3/4	40	1,155	C34DG06WS	N12	L12
50.0	10	439	3/4	30	1,238	C34DG06WS	N13	L13
65.0	10	570	3/4	23	1,233	C34DG06WS	N13	L13
75.0	10	658	3/4	20	1,238	C34DG06WS	N13	L13
100.0	10	878	3/4	15	1,238	C34DG06WS	N13	L13
125.0	10	1,097	3/4	12	1,238	C34DG06WS	N13	L13
150.0	10	1,316	3/4	10	1,238	C34DG06WS	N13	L13

1. TVL = DL + Fv + ($0.2S_{DS}$/1.4 x Wp). All Terms Are Working Loads. Based On Eccentric Loading. 65% Of Total Load Allocated Per Rod.
2. Reductions In Actual Installed Brace Spacing Will Result In An Equal Percentage Reduction In Brace Reaction. As An Option When This Occurs ISAT May Substitute An Alternate Anchorage From Tables D1 or D2 Which Meets or Exceeds The Lowered Brace Reaction.
3. At Max. 50 Degree Brace Inclination. Assumes 50% Of Total Trapeze Load Per Tier.
4. Min. 3,000 psi NWC. Any "N Series" Connection May Be Utilized Having A Numeric Designation Equal To Or Higher Than That Shown.
5. Min. 3,000 psi NWC or LWC. Any "L Series" Connection May Be Utilized Having A Numeric Designation Equal To Or Higher Than That Shown.
6. As An Alternate, Brace Anchorage Connections To Structure May Be Employed Using Any Detail From Structural Connections Section "D" Series Details Where Assembly Design Value Meets Or Exceeds Brace Reaction.
7. For Trade Specific Bracing Installation Notes, Refer To Page 8.1 or 10.1.
8. Utilize Any "G" Series Vertical Support Connection Having A Design Value Equal To Or Greater Than The Corresponding "Rod Total Vertical Load".

REVIEWED FOR CODE COMPLIANCE
HCAI
OPM 0403
BY: William Staehlin
DATE: 01-26-2024
CALIFORNIA BUILDING CODE

REGISTERED PROFESSIONAL ENGINEER
MARCIN WASAZNIK
S 6612
STRUCTURAL
STATE OF CALIFORNIA

ISAT
A Division of Tomarco Contractor Specialties

International Seismic Application Technology
14848 Northam Street, La Mirada, CA 90638
877-999-4728 (Toll Free) 714-523-0845 (Fax)
www.isatsb.com

Rev. 0
03/12/19
Page
C18-0.75-45
2-Tier

4-WAY SPLAYED CABLE BRACING REQUIREMENTS [7] :

2-TIERED TRAPEZE MOUNTED PIPING (Plumbing, Mechanical, Process, Medical Gas) ***MAXIMUM SEISMIC DESIGN FORCE = 0.75 G's***

Requires Use of ISAT Seismic Brackets. *Use of Any Non-ISAT Bracket Voids Engineering.* *2013 California Building Code Compliant*

Combined 2-Tier Maximum Trapeze Load (lbs/lf)	Max. Vertical Support Spacing (ft.)	Rod [1] Total Vertical Load (lbs)	Min. [8] Vertical Support Rod Dia. (in.)	4-WAY SPLAYED CABLE BRACING REQUIREMENTS				
				Max. [2] Brace Spacing (ft.)	Brace [3] Reaction P (lbs)	Min. Brace Assembly E - Pages	Min. Brace Anchorage [6] Form Pour [4] Deck Page D1	Min. Brace Anchorage [6] Metal [5] Deck Page D2
				4-Way Splayed Brace Pattern (B16.2)				
11.0	10	97	1/2	40	467	C12AA04WS	N5	L5
25.0	10	219	3/4	40	1,061	C34DG06WS	N11	L11
35.0	10	307	3/4	29	1,077	C34DG06WS	N11	L11
50.0	10	439	3/4	21	1,114	C34DG06WS	N12	L12
65.0	10	570	3/4	16	1,103	C34DG06WS	N12	L12
75.0	10	658	3/4	14	1,114	C34DG06WS	N12	L12
100.0	10	878	3/4	10	1,061	C34DG06WS	N11	L11

1. TVL = DL + Fv + ($0.2S_{DS}$/1.4 x Wp). All Terms Are Working Loads. Based On Eccentric Loading. 65% Of Total Load Allocated Per Rod.
2. Reductions In Actual Installed Brace Spacing Will Result In An Equal Percentage Reduction In Brace Reaction. As An Option When This Occurs ISAT May Substitute An Alternate Anchorage From Tables D1 or D2 Which Meets or Exceeds The Lowered Brace Reaction.
3. At Max. 60 Degree Brace Inclination. Assumes 50% Of Total Trapeze Load Per Tier.
4. Min. 3,000 psi NWC. Any "N Series" Connection May Be Utilized Having A Numeric Designation Equal To Or Higher Than That Shown.
5. Min. 3,000 psi NWC or LWC. Any "L Series" Connection May Be Utilized Having A Numeric Designation Equal To Or Higher Than That Shown.
6. As An Alternate, Brace Anchorage Connections To Structure May Be Employed Using Any Detail From Structural Connections Section "D" Series Details Where Assembly Design Value Meets Or Exceeds Brace Reaction.
7. For Trade Specific Bracing Installation Notes, Refer To Page 8.1 or 10.1.
8. Utilize Any "G" Series Vertical Support Connection Having A Design Value Equal To Or Greater Than The Corresponding "Rod Total Vertical Load".

REVIEWED FOR CODE COMPLIANCE
HCAI
OPM 0403
BY: William Staehlin
DATE: 01-26-2024
CALIFORNIA BUILDING CODE COMPLIANCE

REGISTERED PROFESSIONAL ENGINEER
MARCIN WASAZNIK
S-6612
STRUCTURAL
STATE OF CALIFORNIA

ISAT
A Division of Tomarco Contractor Specialties

International Seismic Application Technology
14848 Northam Street, La Mirada, CA 90638
877-999-4728 (Toll Free) 714-523-0845 (Fax)
www.isatsb.com

Rev. 0
03/12/19
Page
C18-0.75-60
2-Tier

4-WAY SPLAYED CABLE BRACING REQUIREMENTS [7] :

2-TIERED TRAPEZE MOUNTED PIPING (Plumbing, Mechanical, Process, Medical Gas) ***MAXIMUM SEISMIC DESIGN FORCE = 1.00 G's***

Requires Use of ISAT Seismic Brackets. *Use of Any Non-ISAT Bracket Voids Engineering.* *2013 California Building Code Compliant*

Combined 2-Tier Maximum Trapeze Load (lbs/lf)	Max. Vertical Support Spacing (ft.)	Rod [1] Total Vertical Load (lbs)	Min. [8] Vertical Support Rod Dia. (in.)	4-WAY SPLAYED CABLE BRACING REQUIREMENTS				
				Max. [2] Brace Spacing (ft.)	Brace [3] Reaction P (lbs)	Min. Brace Assembly E - Pages	Min. Brace Anchorage [6] Form Pour [4] Deck Page D1	Min. Brace Anchorage [6] Metal [5] Deck Page D2
				4-Way Splayed Brace Pattern (B16.2)				
11.0	10	97	3/8	40	359	C38AA04WS	N4	L4
25.0	10	219	1/2	40	816	C12AA06WS	N9	L9
35.0	10	307	5/8	40	1,143	C58AA06WS	N12	L12
50.0	10	439	5/8	29	1,184	C58AA06WS	N12	L12
65.0	10	570	5/8	22	1,168	C58AA06WS	N12	L12
75.0	10	658	5/8	19	1,164	C58AA06WS	N12	L12
100.0	10	878	5/8	14	1,143	C58AA06WS	N12	L12
125.0	10	1,097	5/8	11	1,123	C58AA06WS	N12	L12
150.0	10	1,316	5/8	10	1,225	C58AA06WS	N13	L13
175.0	10	1,536	5/8	10	1,429	C58AA06WS	N15	L15

1. TVL = DL + Fv + ($0.2S_{DS}$/1.4 x Wp). All Terms Are Working Loads. Based On Eccentric Loading. 65% Of Total Load Allocated Per Rod.
2. Reductions In Actual Installed Brace Spacing Will Result In An Equal Percentage Reduction In Brace Reaction. As An Option When This Occurs ISAT May Substitute An Alternate Anchorage From Tables D1 or D2 Which Meets or Exceeds The Lowered Brace Reaction.
3. At Max. 30 Degree Brace Inclination. Assumes 50% Of Total Trapeze Load Per Tier.
4. Min. 3,000 psi NWC. Any "N Series" Connection May Be Utilized Having A Numeric Designation Equal To Or Higher Than That Shown.
5. Min. 3,000 psi NWC or LWC. Any "L Series" Connection May Be Utilized Having A Numeric Designation Equal To Or Higher Than That Shown.
6. As An Alternate, Brace Anchorage Connections To Structure May Be Employed Using Any Detail From Structural Connections Section "D" Series Details Where Assembly Design Value Meets Or Exceeds Brace Reaction.
7. For Trade Specific Bracing Installation Notes, Refer To Page 8.1 or 10.1.
8. Utilize Any "G" Series Vertical Support Connection Having A Design Value Equal To Or Greater Than The Corresponding "Rod Total Vertical Load".

REVIEWED FOR CODE COMPLIANCE
HCAI
OPM 0403
BY: William Staehlin
DATE: 01-26-2024
CALIFORNIA BUILDING CODE

REGISTERED PROFESSIONAL ENGINEER
MARCIN WASAZNIK
S 6612
STRUCTURAL
STATE OF CALIFORNIA

ISAT
A Division of Tomarco Contractor Specialties

International Seismic Application Technology
14848 Northam Street, La Mirada, CA 90638
877-999-4728 (Toll Free) 714-523-0845 (Fax)
www.isatsb.com

Rev. 0
03/12/19
Page
C18-1-30
2-Tier

4-WAY SPLAYED CABLE BRACING REQUIREMENTS [7] :

2-TIERED TRAPEZE MOUNTED PIPING (Plumbing, Mechanical, Process, Medical Gas) ***MAXIMUM SEISMIC DESIGN FORCE = 1.00 G's***

Requires Use of ISAT Seismic Brackets. Use of Any Non-ISAT Bracket Voids Engineering. 2013 California Building Code Compliant

Combined 2-Tier Maximum Trapeze Load (lbs/lf)	Max. Vertical Support Spacing (ft.)	Rod [1] Total Vertical Load (lbs)	Min. [8] Vertical Support Rod Dia. (in.)	4-WAY SPLAYED CABLE BRACING REQUIREMENTS				
				Max. [2] Brace Spacing (ft.)	Brace [3] Reaction P (lbs)	Min. Brace Assembly E - Pages	Min. Brace Anchorage [6] Form Pour [4] Deck Page D1	Min. Brace Anchorage [6] Metal [5] Deck Page D2
				4-Way Splayed Brace Pattern (B16.2)				
11.0	10	97	1/2	40	484	C12AA04WS	N5	L5
25.0	10	219	3/4	40	1,100	C34DG06WS	N12	L12
35.0	10	307	3/4	32	1,232	C34DG06WS	N13	L13
50.0	10	439	3/4	23	1,265	C34DG06WS	N13	L13
65.0	10	570	3/4	17	1,216	C34DG06WS	N13	L13
75.0	10	658	3/4	15	1,238	C34DG06WS	N13	L13
100.0	10	878	3/4	11	1,210	C34DG06WS	N13	L13

1. TVL = DL + Fv + ($0.2S_{DS}$/1.4 x Wp). All Terms Are Working Loads. Based On Eccentric Loading. 65% Of Total Load Allocated Per Rod.
2. Reductions In Actual Installed Brace Spacing Will Result In An Equal Percentage Reduction In Brace Reaction. As An Option When This Occurs ISAT May Substitute An Alternate Anchorage From Tables D1 or D2 Which Meets or Exceeds The Lowered Brace Reaction.
3. At Max. 50 Degree Brace Inclination. Assumes 50% Of Total Trapeze Load Per Tier.
4. Min. 3,000 psi NWC. Any "N Series" Connection May Be Utilized Having A Numeric Designation Equal To Or Higher Than That Shown.
5. Min. 3,000 psi NWC or LWC. Any "L Series" Connection May Be Utilized Having A Numeric Designation Equal To Or Higher Than That Shown.
6. As An Alternate, Brace Anchorage Connections To Structure May Be Employed Using Any Detail From Structural Connections Section "D" Series Details Where Assembly Design Value Meets Or Exceeds Brace Reaction.
7. For Trade Specific Bracing Installation Notes, Refer To Page 8.1 or 10.1.
8. Utilize Any "G" Series Vertical Support Connection Having A Design Value Equal To Or Greater Than The Corresponding "Rod Total Vertical Load".

REVIEWED FOR CODE COMPLIANCE
HCAI
OPM 0403
BY: William Staehlin
DATE: 01-26-2024
CALIFORNIA BUILDING CODE 2019

REGISTERED PROFESSIONAL ENGINEER
MARCIN WASAZNIK
S 6612
STRUCTURAL
STATE OF CALIFORNIA

ISAT
A Division of Tomarco Contractor Specialties

International Seismic Application Technology
14848 Northam Street, La Mirada, CA 90638
877-999-4728 (Toll Free) 714-523-0845 (Fax)
www.isatsb.com

Rev. 0
03/12/19
Page
C18-1-45
2-Tier

4-WAY SPLAYED CABLE BRACING REQUIREMENTS [7] :

2-TIERED TRAPEZE MOUNTED PIPING (Plumbing, Mechanical, Process, Medical Gas) ***MAXIMUM SEISMIC DESIGN FORCE = 1.00 G's***

Requires Use of ISAT Seismic Brackets. Use of Any Non-ISAT Bracket Voids Engineering. 2013 California Building Code Compliant

Combined 2-Tier Maximum Trapeze Load (lbs/lf)	Max. Vertical Support Spacing (ft.)	Rod [1] Total Vertical Load (lbs)	Min. [8] Vertical Support Rod Dia. (in.)	4-WAY SPLAYED CABLE BRACING REQUIREMENTS				
				Max. [2] Brace Spacing (ft.)	Brace [3] Reaction P (lbs)	Min. Brace Assembly E - Pages	Min. Brace Anchorage [6] Form Pour [4] Deck Page D1	Min. Brace Anchorage [6] Metal [5] Deck Page D2
				4-Way Splayed Brace Pattern (B16.2)				
11.0	10	97	5/8	40	622	C58AA04WS	N7	L7
25.0	10	219	3/4	31	1,096	C34DG06WS	N11	L11
35.0	10	307	3/4	22	1,089	C34DG06WS	N11	L11
50.0	10	439	3/4	15	1,061	C34DG06WS	N11	L11
65.0	10	570	3/4	12	1,103	C34DG06WS	N12	L12
75.0	10	658	3/4	10	1,061	C34DG06WS	N11	L11

1. TVL = DL + Fv + ($0.2S_{DS}$/1.4 x Wp). All Terms Are Working Loads. Based On Eccentric Loading. 65% Of Total Load Allocated Per Rod.
2. Reductions In Actual Installed Brace Spacing Will Result In An Equal Percentage Reduction In Brace Reaction. As An Option When This Occurs ISAT May Substitute An Alternate Anchorage From Tables D1 or D2 Which Meets or Exceeds The Lowered Brace Reaction.
3. At Max. 60 Degree Brace Inclination. Assumes 50% Of Total Trapeze Load Per Tier.
4. Min. 3,000 psi NWC. Any "N Series" Connection May Be Utilized Having A Numeric Designation Equal To Or Higher Than That Shown.
5. Min. 3,000 psi NWC or LWC. Any "L Series" Connection May Be Utilized Having A Numeric Designation Equal To Or Higher Than That Shown.
6. As An Alternate, Brace Anchorage Connections To Structure May Be Employed Using Any Detail From Structural Connections Section "D" Series Details Where Assembly Design Value Meets Or Exceeds Brace Reaction.
7. For Trade Specific Bracing Installation Notes, Refer To Page 8.1 or 10.1.
8. Utilize Any "G" Series Vertical Support Connection Having A Design Value Equal To Or Greater Than The Corresponding "Rod Total Vertical Load".

REVIEWED FOR CODE COMPLIANCE
HCAI
OPM 0403
BY: William Staehlin
DATE: 01-26-2024
CALIFORNIA BUILDING CODE, 2019

REGISTERED PROFESSIONAL ENGINEER
MARCIN WASAZNIK
S-6612
STRUCTURAL
STATE OF CALIFORNIA

ISAT
A Division of Tomarco Contractor Specialties

International Seismic Application Technology
14848 Northam Street, La Mirada, CA 90638
877-999-4728 (Toll Free) 714-523-0845 (Fax)
www.isatsb.com

Rev. 0
03/12/19
Page
C18-1-60
2-Tier

RIGID BRACING REQUIREMENTS [7]

3-ROD TRAPEZE MOUNTED PIPING (Plumbing, Mechanical, Process, Medical Gas) — **MAXIMUM SEISMIC DESIGN FORCE = 0.25 G's**

Requires Use of ISAT Seismic Brackets. Use of Any Non-ISAT Bracket Voids Engineering. — *2013 California Building Code Compliant*

Maximum Trapeze Load (lbs/lf)	Max. Vertical Support Spacing (ft.)	Inboard [1] Rod Total Vertical Load (lbs)	Min. [8] Vertical Support Rod Dia. (in.)	INBOARD LONGITUDINAL BRACING REQUIREMENTS: Max. [2] Brace Spacing (ft.)	Brace [3] Reaction P (lbs)	Min. Brace Assembly E - Pages	Min. Brace Anchorage [6]: Form Pour [4] Deck Page D1	Min. Brace Anchorage [6]: Metal [5] Deck Page D2
				5-Way Transverse, Longitudinal Brace Pattern (B13.3)				
11.0	10	126	3/8	40	54	R38AAEM306	N1	L1
25.0	10	287	1/2	40	123	R12AAEM306	N2	L2
35.0	10	402	1/2	40	172	R12AAEM306	N2	L2
50.0	10	574	1/2	40	245	R12AAEM306	N3	L3
65.0	10	746	1/2	40	319	R12AAEM409	N4	L4
75.0	10	861	1/2	40	368	R12AAEM406	N4	L4
100.0	10	1,148	1/2	40	491	R12AAEM406	N5	L5
125.0	10	1,434	1/2	40	613	R12AAEM406	N7	L7
				6-Way Transverse, Longitudinal Brace Pattern (B13.5)				
150.0	10	1,721	5/8	40	736	R58AAEM509	N8	L8
175.0	10	2,008	5/8	40	859	R58AAEM506	N9	L9
200.0	10	2,295	5/8	40	981	R58AAEM506	N10	L10
225.0	10	2,582	3/4	40	1,104	R34DGB1P06	N12	L12

1. TVL = DL + Fv + ($0.2S_{DS}$/1.4 x Wp). All Terms Are Working Loads. Based On Eccentric Loading, 65% Of Total Load Allocated Per Inboard Rod.
2. Reductions In Actual Installed Brace Spacing Will Result In An Equal Percentage Reduction In Brace Reaction. As An Option When This Occurs ISAT May Substitute An Alternate Anchorage From Tables D1 or D2 Which Meets or Exceeds The Lowered Brace Reaction.
3. At Max. 30 Degree Brace Inclination.
4. Min. 3,000 psi NWC. Any "N Series" Connection May Be Utilized Having A Numeric Designation Equal To Or Higher Than That Shown.
5. Min. 3,000 psi NWC or LWC. Any "L Series" Connection May Be Utilized Having A Numeric Designation Equal To Or Higher Than That Shown.
6. As An Alternate, Brace Anchorage Connections To Structure May Be Employed Using Any Detail From Structural Connections Section "D" Series Details Where Assembly Design Value Meets Or Exceeds Brace Reaction.
7. For Trade Specific Bracing Installation Notes, Refer To Page 8.1 or 10.1.
8. Utilize Any "G" Series Vertical Support Connection Having A Design Value Equal To Or Greater Than The Corresponding "Rod Total Vertical Load".

REVIEWED FOR CODE COMPLIANCE
HCAI
OPM-0403
BY: William Staehlin
DATE: 01-26-2024
CALIFORNIA BUILDING CODE 2022

REGISTERED PROFESSIONAL ENGINEER MARCIN WASAZNIK S-6612 STRUCTURAL STATE OF CALIFORNIA

ISAT
A Division of Tomarco Contractor Specialties
International Seismic Application Technology
14848 Northam Street, La Mirada, CA 90638
877-999-4728 (Toll Free) 714-523-0845 (Fax)
www.isatsb.com

Rev.1
11/19/18
Page
C19-0.25-30
Inboard

RIGID BRACING REQUIREMENTS [7]

3-ROD TRAPEZE MOUNTED PIPING (Plumbing, Mechanical, Process, Medical Gas) — **MAXIMUM SEISMIC DESIGN FORCE = 0.25 G's**

Requires Use of ISAT Seismic Brackets. Use of Any Non-ISAT Bracket Voids Engineering. — *2013 California Building Code Compliant*

Maximum Trapeze Load (lbs/lf)	Max. Vertical Support Spacing (ft.)	Inboard [1] Rod Total Vertical Load (lbs)	Min. [8] Vertical Support Rod Dia. (in.)	INBOARD LONGITUDINAL BRACING REQUIREMENTS: Max. [2] Brace Spacing (ft.)	Brace [3] Reaction P (lbs)	Min. Brace Assembly E - Pages	Min. Brace Anchorage [6]: Form Pour [4] Deck Page D1	Min. Brace Anchorage [6]: Metal [5] Deck Page D2
				5-Way Transverse, Longitudinal Brace Pattern (B13.3)				
11.0	10	126	3/8	40	73	R38AAEM306	N1	L1
25.0	10	287	1/2	40	165	R12AAEM306	N2	L2
35.0	10	402	1/2	40	231	R12AAEM306	N3	L3
50.0	10	574	1/2	40	331	R12AAEM406	N4	L4
65.0	10	746	1/2	40	430	R12AAEM406	N5	L5
75.0	10	861	1/2	40	496	R12AAEM406	N5	L5
100.0	10	1,148	1/2	40	661	R12AAEM509	N7	L7
125.0	10	1,434	1/2	40	826	R12AAEM506	N9	L9
150.0	10	1,721	5/8	40	992	R58AAEM506	N10	L10
				6-Way Transverse, Longitudinal Brace Pattern (B13.5)				
175.0	10	2,008	5/8	40	1,157	R58AAEM506	N12	L12
200.0	10	2,295	5/8	40	1,322	R58AAEM506	N14	L14
225.0	10	2,582	3/4	40	1,488	R34CFB2P12	N15	L15

1. TVL = DL + Fv + ($0.2S_{DS}$/1.4 x Wp). All Terms Are Working Loads. Based On Eccentric Loading, 65% Of Total Load Allocated Per Inboard Rod.
2. Reductions In Actual Installed Brace Spacing Will Result In An Equal Percentage Reduction In Brace Reaction. As An Option When This Occurs ISAT May Substitute An Alternate Anchorage From Tables D1 or D2 Which Meets or Exceeds The Lowered Brace Reaction.
3. At Max. 50 Degree Brace Inclination.
4. Min. 3,000 psi NWC. Any "N Series" Connection May Be Utilized Having A Numeric Designation Equal To Or Higher Than That Shown.
5. Min. 3,000 psi NWC or LWC. Any "L Series" Connection May Be Utilized Having A Numeric Designation Equal To Or Higher Than That Shown.
6. As An Alternate, Brace Anchorage Connections To Structure May Be Employed Using Any Detail From Structural Connections Section "D" Series Details Where Assembly Design Value Meets Or Exceeds Brace Reaction.
7. For Trade Specific Bracing Installation Notes, Refer To Page 8.1 or 10.1.
8. Utilize Any "G" Series Vertical Support Connection Having A Design Value Equal To Or Greater Than The Corresponding "Rod Total Vertical Load".

REVIEWED FOR CODE COMPLIANCE
HCAI
OPM-0403
BY: William Staehlin
DATE: 01-26-2024
CALIFORNIA BUILDING CODE 2022

REGISTERED PROFESSIONAL ENGINEER MARCIN WASAZNIK S-6612 STRUCTURAL STATE OF CALIFORNIA

ISAT
A Division of Tomarco Contractor Specialties
International Seismic Application Technology
14848 Northam Street, La Mirada, CA 90638
877-999-4728 (Toll Free) 714-523-0845 (Fax)
www.isatsb.com

Rev.1
11/19/18
Page
C19-0.25-45
Inboard

RIGID BRACING REQUIREMENTS [7]

3-ROD TRAPEZE MOUNTED PIPING (Plumbing, Mechanical, Process, Medical Gas) — **MAXIMUM SEISMIC DESIGN FORCE = 0.25 G's**

Requires Use of ISAT Seismic Brackets. Use of Any Non-ISAT Bracket Voids Engineering. — *2013 California Building Code Compliant*

Maximum Trapeze Load (lbs/lf)	Max. Vertical Support Spacing (ft.)	Inboard [1] Rod Total Vertical Load (lbs)	Min. [8] Vertical Support Rod Dia. (in.)	INBOARD LONGITUDINAL BRACING REQUIREMENTS: Max. [2] Brace Spacing (ft.)	Brace [3] Reaction P (lbs)	Min. Brace Assembly E - Pages	Min. Brace Anchorage [6]: Form Pour [4] Deck Page D1	Min. Brace Anchorage [6]: Metal [5] Deck Page D2
				5-Way Transverse, Longitudinal Brace Pattern (B13.3)				
11.0	10	126	3/8	40	94	R38AAEM306	N1	L1
25.0	10	287	1/2	40	213	R12AAEM306	N3	L3
35.0	10	402	1/2	40	298	R12AAEM306	N3	L3
50.0	10	574	1/2	40	425	R12AAEM406	N5	L5
65.0	10	746	1/2	40	553	R12AAEM406	N6	L6
75.0	10	861	1/2	40	638	R12AAEM406	N7	L7
100.0	10	1,148	1/2	40	850	R12AAEM506	N9	L9
125.0	10	1,434	1/2	40	1,063	R12AAEM506	N11	L11
				6-Way Transverse, Longitudinal Brace Pattern (B13.5)				
150.0	10	1,721	5/8	40	1,275	R58AAEM506	N13	L13
175.0	10	2,008	5/8	40	1,488	R58AAEM606	N15	L15
200.0	10	2,295	5/8	40	1,700	R58AAEM606	N17	L17
225.0	10	2,582	3/4	28	1,339	R34DGB1S06	N14	L14

1. TVL = DL + Fv + ($0.2S_{DS}$/1.4 x Wp). All Terms Are Working Loads. Based On Eccentric Loading, 65% Of Total Load Allocated Per Inboard Rod.
2. Reductions In Actual Installed Brace Spacing Will Result In An Equal Percentage Reduction In Brace Reaction. As An Option When This Occurs ISAT May Substitute An Alternate Anchorage From Tables D1 or D2 Which Meets or Exceeds The Lowered Brace Reaction.
3. At Max. 60 Degree Brace Inclination.
4. Min. 3,000 psi NWC. Any "N Series" Connection May Be Utilized Having A Numeric Designation Equal To Or Higher Than That Shown.
5. Min. 3,000 psi NWC or LWC. Any "L Series" Connection May Be Utilized Having A Numeric Designation Equal To Or Higher Than That Shown.
6. As An Alternate, Brace Anchorage Connections To Structure May Be Employed Using Any Detail From Structural Connections Section "D" Series Details Where Assembly Design Value Meets Or Exceeds Brace Reaction.
7. For Trade Specific Bracing Installation Notes, Refer To Page 8.1 or 10.1.
8. Utilize Any "G" Series Vertical Support Connection Having A Design Value Equal To Or Greater Than The Corresponding "Rod Total Vertical Load".

REVIEWED FOR CODE COMPLIANCE
HCAI
OPM-0403
BY: William Staehlin
DATE: 01-26-2024
CALIFORNIA BUILDING CODE 2022

REGISTERED PROFESSIONAL ENGINEER MARCIN WASAZNIK S-6612 STRUCTURAL STATE OF CALIFORNIA

ISAT
A Division of Tomarco Contractor Specialties
International Seismic Application Technology
14848 Northam Street, La Mirada, CA 90638
877-999-4728 (Toll Free) 714-523-0845 (Fax)
www.isatsb.com

Rev.1
11/19/18
Page
C19-0.25-60
Inboard

RIGID BRACING REQUIREMENTS [7]

3-ROD TRAPEZE MOUNTED PIPING (Plumbing, Mechanical, Process, Medical Gas) — **MAXIMUM SEISMIC DESIGN FORCE = 0.50 G's**

Requires Use of ISAT Seismic Brackets. Use of Any Non-ISAT Bracket Voids Engineering. — *2013 California Building Code Compliant*

Maximum Trapeze Load (lbs/lf)	Max. Vertical Support Spacing (ft.)	Inboard [1] Rod Total Vertical Load (lbs)	Min. [8] Vertical Support Rod Dia. (in.)	INBOARD LONGITUDINAL BRACING REQUIREMENTS: Max. [2] Brace Spacing (ft.)	Brace [3] Reaction P (lbs)	Min. Brace Assembly E - Pages	Min. Brace Anchorage [6]: Form Pour [4] Deck Page D1	Min. Brace Anchorage [6]: Metal [5] Deck Page D2
				5-Way Transverse, Longitudinal Brace Pattern (B13.3)				
11.0	10	126	3/8	40	108	R38AAEM306	N2	L2
25.0	10	287	1/2	40	245	R12AAEM306	N3	L3
35.0	10	402	1/2	40	344	R12AAEM406	N4	L4
50.0	10	574	1/2	40	491	R12AAEM406	N5	L5
65.0	10	746	1/2	40	638	R12AAEM406	N7	L7
75.0	10	861	1/2	40	736	R12AAEM509	N8	L8
100.0	10	1,148	1/2	40	981	R12AAEM506	N10	L10
125.0	10	1,434	1/2	40	1,227	R12AAEM506	N13	L13
				6-Way Transverse, Longitudinal Brace Pattern (B13.5)				
150.0	10	1,721	5/8	39	1,435	R58AAEM506	N15	L15
175.0	10	2,008	5/8	33	1,417	R58AAEM506	N15	L15
200.0	10	2,295	5/8	29	1,423	R58AAEM506	N15	L15
225.0	10	2,582	3/4	21	1,159	R34DGB1P06	N12	L12

1. TVL = DL + Fv + ($0.2S_{DS}$/1.4 x Wp). All Terms Are Working Loads. Based On Eccentric Loading, 65% Of Total Load Allocated Per Inboard Rod.
2. Reductions In Actual Installed Brace Spacing Will Result In An Equal Percentage Reduction In Brace Reaction. As An Option When This Occurs ISAT May Substitute An Alternate Anchorage From Tables D1 or D2 Which Meets or Exceeds The Lowered Brace Reaction.
3. At Max. 30 Degree Brace Inclination.
4. Min. 3,000 psi NWC. Any "N Series" Connection May Be Utilized Having A Numeric Designation Equal To Or Higher Than That Shown.
5. Min. 3,000 psi NWC or LWC. Any "L Series" Connection May Be Utilized Having A Numeric Designation Equal To Or Higher Than That Shown.
6. As An Alternate, Brace Anchorage Connections To Structure May Be Employed Using Any Detail From Structural Connections Section "D" Series Details Where Assembly Design Value Meets Or Exceeds Brace Reaction.
7. For Trade Specific Bracing Installation Notes, Refer To Page 8.1 or 10.1.
8. Utilize Any "G" Series Vertical Support Connection Having A Design Value Equal To Or Greater Than The Corresponding "Rod Total Vertical Load".

REVIEWED FOR CODE COMPLIANCE
HCAI
OPM-0403
BY: William Staehlin
DATE: 01-26-2024
CALIFORNIA BUILDING CODE 2022

REGISTERED PROFESSIONAL ENGINEER MARCIN WASAZNIK S-6612 STRUCTURAL STATE OF CALIFORNIA

ISAT
A Division of Tomarco Contractor Speciaities
International Seismic Application Technology
14848 Northam Street, La Mirada, CA 90638
877-999-4728 (Toll Free) 714-523-0845 (Fax)
www.isatsb.com

Rev.1
11/19/18
Page
C19-0.5-30
Inboard

RIGID BRACING REQUIREMENTS [7]

3-ROD TRAPEZE MOUNTED PIPING (Plumbing, Mechanical, Process, Medical Gas) — **MAXIMUM SEISMIC DESIGN FORCE = 0.50 G's**

Requires Use of ISAT Seismic Brackets. Use of Any Non-ISAT Bracket Voids Engineering. — *2013 California Building Code Compliant*

Maximum Trapeze Load (lbs/lf)	Max. Vertical Support Spacing (ft.)	Inboard [1] Rod Total Vertical Load (lbs)	Min. [8] Vertical Support Rod Dia. (in.)	INBOARD LONGITUDINAL BRACING REQUIREMENTS: Max. [2] Brace Spacing (ft.)	Brace [3] Reaction P (lbs)	Min. Brace Assembly E - Pages	Min. Brace Anchorage [6]: Form Pour [4] Deck Page D1	Min. Brace Anchorage [6]: Metal [5] Deck Page D2
				5-Way Transverse, Longitudinal Brace Pattern (B13.3)				
11.0	10	126	3/8	40	145	R38AAEM306	N2	L2
25.0	10	287	1/2	40	331	R12AAEM406	N4	L4
35.0	10	402	1/2	40	463	R12AAEM406	N5	L5
50.0	10	574	1/2	40	661	R12AAEM509	N7	L7
65.0	10	746	1/2	40	860	R12AAEM506	N9	L9
75.0	10	861	1/2	40	992	R12AAEM506	N10	L10
100.0	10	1,148	1/2	40	1,322	R12AAEM506	N14	L14
125.0	10	1,434	1/2	40	1,653	R12AAEM606	N17	L17
150.0	10	1,721	5/8	40	1,984	R58AAEM606	N20	L20
				6-Way Transverse, Longitudinal Brace Pattern (B13.5)				
175.0	10	2,008	5/8	40	2,314	R58DGB2P09	N24	L24
200.0	10	2,295	5/8	36	2,380	R58DGB2P09	N24	L24
225.0	10	2,582	3/4	32	2,380	R34DGB2P09	N24	L24

1. TVL = DL + Fv + ($0.2S_{DS}$/1.4 x Wp). All Terms Are Working Loads. Based On Eccentric Loading, 65% Of Total Load Allocated Per Inboard Rod.
2. Reductions In Actual Installed Brace Spacing Will Result In An Equal Percentage Reduction In Brace Reaction. As An Option When This Occurs ISAT May Substitute An Alternate Anchorage From Tables D1 or D2 Which Meets or Exceeds The Lowered Brace Reaction.
3. At Max. 50 Degree Brace Inclination.
4. Min. 3,000 psi NWC. Any "N Series" Connection May Be Utilized Having A Numeric Designation Equal To Or Higher Than That Shown.
5. Min. 3,000 psi NWC or LWC. Any "L Series" Connection May Be Utilized Having A Numeric Designation Equal To Or Higher Than That Shown.
6. As An Alternate, Brace Anchorage Connections To Structure May Be Employed Using Any Detail From Structural Connections Section "D" Series Details Where Assembly Design Value Meets Or Exceeds Brace Reaction.
7. For Trade Specific Bracing Installation Notes, Refer To Page 8.1 or 10.1.
8. Utilize Any "G" Series Vertical Support Connection Having A Design Value Equal To Or Greater Than The Corresponding "Rod Total Vertical Load".

REVIEWED FOR CODE COMPLIANCE
HCAI
OPM-0403
BY: William Staehlin
DATE: 01-26-2024
CALIFORNIA BUILDING CODE 2022

REGISTERED PROFESSIONAL ENGINEER MARCIN WASAZNIK S-6612 STRUCTURAL STATE OF CALIFORNIA

ISAT
A Division of Tomarco Contractor Specialties
International Seismic Application Technology
14848 Northam Street, La Mirada, CA 90638
877-999-4728 (Toll Free) 714-523-0845 (Fax)
www.isatsb.com

Rev.1
11/19/18
Page
C19-0.5-45
Inboard

RIGID BRACING REQUIREMENTS [7]

3-ROD TRAPEZE MOUNTED PIPING (Plumbing, Mechanical, Process, Medical Gas) — **MAXIMUM SEISMIC DESIGN FORCE = 0.50 G's**

Requires Use of ISAT Seismic Brackets. Use of Any Non-ISAT Bracket Voids Engineering. — *2013 California Building Code Compliant*

Maximum Trapeze Load (lbs/lf)	Max. Vertical Support Spacing (ft.)	Inboard [1] Rod Total Vertical Load (lbs)	Min. [8] Vertical Support Rod Dia. (in.)	INBOARD LONGITUDINAL BRACING REQUIREMENTS: Max. [2] Brace Spacing (ft.)	Brace [3] Reaction P (lbs)	Min. Brace Assembly E - Pages	Min. Brace Anchorage [6]: Form Pour [4] Deck Page D1	Min. Brace Anchorage [6]: Metal [5] Deck Page D2
				5-Way Transverse, Longitudinal Brace Pattern (B13.3)				
11.0	10	126	3/8	40	187	R38AAEM306	N2	L2
25.0	10	287	1/2	40	425	R12AAEM406	N5	L5
35.0	10	402	1/2	40	595	R12AAEM406	N6	L6
50.0	10	574	1/2	40	850	R12AAEM506	N9	L9
65.0	10	746	1/2	40	1,105	R12AAEM506	N12	L12
75.0	10	861	1/2	40	1,275	R12AAEM506	N13	L13
100.0	10	1,148	1/2	40	1,700	R12AAEM606	N17	L17
125.0	10	1,434	1/2	40	2,125	R12AAB2P09	N22	L22
				6-Way Transverse, Longitudinal Brace Pattern (B13.5)				
150.0	10	1,721	5/8	38	2,423	R58AAB2P06	N25	L25
175.0	10	2,008	5/8	33	2,454	R58AAB2P06	N25	L25
200.0	10	2,295	5/8	29	2,465	R58AAB2P06	N25	L25
225.0	10	2,582	3/4	14	1,339	R34DGB1S06	N14	L14

1. TVL = DL + Fv + ($0.2S_{DS}$/1.4 x Wp). All Terms Are Working Loads. Based On Eccentric Loading, 65% Of Total Load Allocated Per Inboard Rod.
2. Reductions In Actual Installed Brace Spacing Will Result In An Equal Percentage Reduction In Brace Reaction. As An Option When This Occurs ISAT May Substitute An Alternate Anchorage From Tables D1 or D2 Which Meets or Exceeds The Lowered Brace Reaction.
3. At Max. 60 Degree Brace Inclination.
4. Min. 3,000 psi NWC. Any "N Series" Connection May Be Utilized Having A Numeric Designation Equal To Or Higher Than That Shown.
5. Min. 3,000 psi NWC or LWC. Any "L Series" Connection May Be Utilized Having A Numeric Designation Equal To Or Higher Than That Shown.
6. As An Alternate, Brace Anchorage Connections To Structure May Be Employed Using Any Detail From Structural Connections Section "D" Series Details Where Assembly Design Value Meets Or Exceeds Brace Reaction.
7. For Trade Specific Bracing Installation Notes, Refer To Page 8.1 or 10.1.
8. Utilize Any "G" Series Vertical Support Connection Having A Design Value Equal To Or Greater Than The Corresponding "Rod Total Vertical Load".

REVIEWED FOR CODE COMPLIANCE
HCAI
OPM-0403
BY: William Staehlin
DATE: 01-26-2024
CALIFORNIA BUILDING CODE 2022

REGISTERED PROFESSIONAL ENGINEER MARCIN WASAZNIK S-6612 STRUCTURAL STATE OF CALIFORNIA

ISAT
A Division of Tomarco Contractor Speciaities
International Seismic Application Technology
14848 Northam Street, La Mirada, CA 90638
877-999-4728 (Toll Free) 714-523-0845 (Fax)
www.isatsb.com

Rev.1
11/19/18
Page
C19-0.5-60
Inboard

RIGID BRACING REQUIREMENTS [7]

3-ROD TRAPEZE MOUNTED PIPING (Plumbing, Mechanical, Process, Medical Gas) — **MAXIMUM SEISMIC DESIGN FORCE = 0.75 G's**

Requires Use of ISAT Seismic Brackets. Use of Any Non-ISAT Bracket Voids Engineering. — *2013 California Building Code Compliant*

Maximum Trapeze Load (lbs/lf)	Max. Vertical Support Spacing (ft.)	Inboard [1] Rod Total Vertical Load (lbs)	Min. [8] Vertical Support Rod Dia. (in.)	INBOARD LONGITUDINAL BRACING REQUIREMENTS: Max. [2] Brace Spacing (ft.)	Brace [3] Reaction P (lbs)	Min. Brace Assembly E - Pages	Min. Brace Anchorage [6]: Form Pour [4] Deck Page D1	Min. Brace Anchorage [6]: Metal [5] Deck Page D2
				5-Way Transverse, Longitudinal Brace Pattern (B13.3)				
11.0	10	126	3/8	40	162	R38AAEM306	N2	L2
25.0	10	287	1/2	40	368	R12AAEM406	N4	L4
35.0	10	402	1/2	40	515	R12AAEM406	N6	L6
50.0	10	574	1/2	40	736	R12AAEM509	N8	L8
65.0	10	746	1/2	40	957	R12AAEM506	N10	L10
75.0	10	861	1/2	40	1,104	R12AAEM506	N12	L12
100.0	10	1,148	1/2	38	1,399	R12AAEM506	N14	L14
125.0	10	1,434	1/2	30	1,380	R12AAEM506	N14	L14
				6-Way Transverse, Longitudinal Brace Pattern (B13.5)				
150.0	10	1,721	5/8	26	1,435	R58AAEM506	N15	L15
175.0	10	2,008	5/8	22	1,417	R58AAEM506	N15	L15
200.0	10	2,295	5/8	19	1,399	R58AAEM506	N14	L14
225.0	10	2,582	3/4	14	1,159	R34DGB1P06	N12	L12

1. TVL = DL + Fv + ($0.2S_{DS}$/1.4 x Wp). All Terms Are Working Loads. Based On Eccentric Loading, 65% Of Total Load Allocated Per Inboard Rod.
2. Reductions In Actual Installed Brace Spacing Will Result In An Equal Percentage Reduction In Brace Reaction. As An Option When This Occurs ISAT May Substitute An Alternate Anchorage From Tables D1 or D2 Which Meets or Exceeds The Lowered Brace Reaction.
3. At Max. 30 Degree Brace Inclination.
4. Min. 3,000 psi NWC. Any "N Series" Connection May Be Utilized Having A Numeric Designation Equal To Or Higher Than That Shown.
5. Min. 3,000 psi NWC or LWC. Any "L Series" Connection May Be Utilized Having A Numeric Designation Equal To Or Higher Than That Shown.
6. As An Alternate, Brace Anchorage Connections To Structure May Be Employed Using Any Detail From Structural Connections Section "D" Series Details Where Assembly Design Value Meets Or Exceeds Brace Reaction.
7. For Trade Specific Bracing Installation Notes, Refer To Page 8.1 or 10.1.
8. Utilize Any "G" Series Vertical Support Connection Having A Design Value Equal To Or Greater Than The Corresponding "Rod Total Vertical Load".

REVIEWED FOR CODE COMPLIANCE
HCAI
OPM-0403
BY: William Staehlin
DATE: 01-26-2024
CALIFORNIA BUILDING CODE 2022

REGISTERED PROFESSIONAL ENGINEER MARCIN WASAZNIK S-6612 STRUCTURAL STATE OF CALIFORNIA

ISAT
A Division of Tomarco Contractor Speciaities
International Seismic Application Technology
14848 Northam Street, La Mirada, CA 90638
877-999-4728 (Toll Free) 714-523-0845 (Fax)
www.isatsb.com

Rev.1
11/19/18
Page
C19-0.75-30
Inboard

RIGID BRACING REQUIREMENTS [7]

3-ROD TRAPEZE MOUNTED PIPING (Plumbing, Mechanical, Process, Medical Gas) — **MAXIMUM SEISMIC DESIGN FORCE = 0.75 G's**

Requires Use of ISAT Seismic Brackets. Use of Any Non-ISAT Bracket Voids Engineering. — *2013 California Building Code Compliant*

Maximum Trapeze Load (lbs/lf)	Max. Vertical Support Spacing (ft.)	Inboard [1] Rod Total Vertical Load (lbs)	Min. [8] Vertical Support Rod Dia. (in.)	INBOARD LONGITUDINAL BRACING REQUIREMENTS: Max. [2] Brace Spacing (ft.)	Brace [3] Reaction P (lbs)	Min. Brace Assembly E - Pages	Min. Brace Anchorage [6]: Form Pour [4] Deck Page D1	Min. Brace Anchorage [6]: Metal [5] Deck Page D2
				5-Way Transverse, Longitudinal Brace Pattern (B13.3)				
11.0	10	126	3/8	40	218	R38AAEM306	N3	L3
25.0	10	287	1/2	40	496	R12AAEM406	N5	L5
35.0	10	402	1/2	40	694	R12AAEM509	N7	L7
50.0	10	574	1/2	40	992	R12AAEM506	N10	L10
65.0	10	746	1/2	40	1,289	R12AAEM506	N13	L13
75.0	10	861	1/2	40	1,488	R12AAEM606	N15	L15
100.0	10	1,148	1/2	40	1,984	R12AAEM606	N20	L20
125.0	10	1,434	1/2	36	2,231	R12BGB2P09	N23	L23
150.0	10	1,721	5/8	32	2,380	R58DGB2P09	N24	L24
				6-Way Transverse, Longitudinal Brace Pattern (B13.5)				
175.0	10	2,008	5/8	28	2,430	R58DGB2P06	N25	L25
200.0	10	2,295	5/8	24	2,380	R58DGB2P09	N24	L24
225.0	10	2,582	3/4	22	2,455	R34DGB2P06	N25	L25

1. TVL = DL + Fv + ($0.2S_{DS}$/1.4 x Wp). All Terms Are Working Loads. Based On Eccentric Loading, 65% Of Total Load Allocated Per Inboard Rod.
2. Reductions In Actual Installed Brace Spacing Will Result In An Equal Percentage Reduction In Brace Reaction. As An Option When This Occurs ISAT May Substitute An Alternate Anchorage From Tables D1 or D2 Which Meets or Exceeds The Lowered Brace Reaction.
3. At Max. 50 Degree Brace Inclination.
4. Min. 3,000 psi NWC. Any "N Series" Connection May Be Utilized Having A Numeric Designation Equal To Or Higher Than That Shown.
5. Min. 3,000 psi NWC or LWC. Any "L Series" Connection May Be Utilized Having A Numeric Designation Equal To Or Higher Than That Shown.
6. As An Alternate, Brace Anchorage Connections To Structure May Be Employed Using Any Detail From Structural Connections Section "D" Series Details Where Assembly Design Value Meets Or Exceeds Brace Reaction.
7. For Trade Specific Bracing Installation Notes, Refer To Page 8.1 or 10.1.
8. Utilize Any "G" Series Vertical Support Connection Having A Design Value Equal To Or Greater Than The Corresponding "Rod Total Vertical Load".

REVIEWED FOR CODE COMPLIANCE
HCAI
OPM-0403
BY: William Staehlin
DATE: 01-26-2024
CALIFORNIA BUILDING CODE 2022

REGISTERED PROFESSIONAL ENGINEER MARCIN WASAZNIK S-6612 STRUCTURAL STATE OF CALIFORNIA

ISAT
A Division of Tomarco Contractor Specialties
International Seismic Application Technology
14848 Northam Street, La Mirada, CA 90638
877-999-4728 (Toll Free) 714-523-0845 (Fax)
www.isatsb.com

Rev.1
11/18/19
Page
C19-0.75-45
Inboard

RIGID BRACING REQUIREMENTS [7]

3-ROD TRAPEZE MOUNTED PIPING (Plumbing, Mechanical, Process, Medical Gas) — **MAXIMUM SEISMIC DESIGN FORCE = 0.75 G's**

Requires Use of ISAT Seismic Brackets. Use of Any Non-ISAT Bracket Voids Engineering. — *2013 California Building Code Compliant*

Maximum Trapeze Load (lbs/lf)	Max. Vertical Support Spacing (ft.)	Inboard [1] Rod Total Vertical Load (lbs)	Min. [8] Vertical Support Rod Dia. (in.)	INBOARD LONGITUDINAL BRACING REQUIREMENTS: Max. [2] Brace Spacing (ft.)	Brace [3] Reaction P (lbs)	Min. Brace Assembly E - Pages	Min. Brace Anchorage [6]: Form Pour [4] Deck Page D1	Min. Brace Anchorage [6]: Metal [5] Deck Page D2
				5-Way Transverse, Longitudinal Brace Pattern (B13.3)				
11.0	10	126	3/8	40	281	R38AAEM306	N3	L3
25.0	10	287	1/2	40	638	R12AAEM406	N7	L7
35.0	10	402	1/2	40	893	R12AAEM506	N9	L9
50.0	10	574	1/2	40	1,275	R12AAEM506	N13	L13
65.0	10	746	1/2	40	1,658	R12AAEM606	N17	L17
75.0	10	861	1/2	40	1,913	R12AAEM606	N20	L20
100.0	10	1,148	1/2	38	2,423	R12AAB2P06	N25	L25
125.0	10	1,434	1/2	30	2,391	R12AAB2P06	N24	L24
				6-Way Transverse, Longitudinal Brace Pattern (B13.5)				
150.0	10	1,721	5/8	25	2,391	R58AAB2P06	N24	L24
175.0	10	2,008	5/8	22	2,454	R58AAB2P06	N25	L25
200.0	10	2,295	5/8	19	2,423	R58AAB2P06	N25	L25
225.0	10	2,582	3/4	9	1,291	R34DGB1S06	N13	L13

1. TVL = DL + Fv + ($0.2S_{DS}$/1.4 x Wp). All Terms Are Working Loads. Based On Eccentric Loading, 65% Of Total Load Allocated Per Inboard Rod.
2. Reductions In Actual Installed Brace Spacing Will Result In An Equal Percentage Reduction In Brace Reaction. As An Option When This Occurs ISAT May Substitute An Alternate Anchorage From Tables D1 or D2 Which Meets or Exceeds The Lowered Brace Reaction.
3. At Max. 60 Degree Brace Inclination.
4. Min. 3,000 psi NWC. Any "N Series" Connection May Be Utilized Having A Numeric Designation Equal To Or Higher Than That Shown.
5. Min. 3,000 psi NWC or LWC. Any "L Series" Connection May Be Utilized Having A Numeric Designation Equal To Or Higher Than That Shown.
6. As An Alternate, Brace Anchorage Connections To Structure May Be Employed Using Any Detail From Structural Connections Section "D" Series Details Where Assembly Design Value Meets Or Exceeds Brace Reaction.
7. For Trade Specific Bracing Installation Notes, Refer To Page 8.1 or 10.1.
8. Utilize Any "G" Series Vertical Support Connection Having A Design Value Equal To Or Greater Than The Corresponding "Rod Total Vertical Load".

REVIEWED FOR CODE COMPLIANCE
HCAI
OPM-0403
BY: William Staehlin
DATE: 01-26-2024
CALIFORNIA BUILDING CODE 2022

REGISTERED PROFESSIONAL ENGINEER MARCIN WASAZNIK S-6612 STRUCTURAL STATE OF CALIFORNIA

ISAT
A Division of Tomarco Contractor Speciaities
International Seismic Application Technology
14848 Northam Street, La Mirada, CA 90638
877-999-4728 (Toll Free) 714-523-0845 (Fax)
www.isatsb.com

Rev.1
11/18/19
Page
C19-0.75-60
Inboard

RIGID BRACING REQUIREMENTS [7]

3-ROD TRAPEZE MOUNTED PIPING (Plumbing, Mechanical, Process, Medical Gas) — **MAXIMUM SEISMIC DESIGN FORCE = 1.00 G's**

Requires Use of ISAT Seismic Brackets. Use of Any Non-ISAT Bracket Voids Engineering. — *2013 California Building Code Compliant*

Maximum Trapeze Load (lbs/lf)	Max. Vertical Support Spacing (ft.)	Inboard [1] Rod Total Vertical Load (lbs)	Min. [8] Vertical Support Rod Dia. (in.)	INBOARD LONGITUDINAL BRACING REQUIREMENTS: Max. [2] Brace Spacing (ft.)	Brace [3] Reaction P (lbs)	Min. Brace Assembly E - Pages	Min. Brace Anchorage [6]: Form Pour [4] Deck Page D1	Min. Brace Anchorage [6]: Metal [5] Deck Page D2
				5-Way Transverse, Longitudinal Brace Pattern (B13.3)				
11.0	10	126	3/8	40	216	R38AAEM306	N3	L3
25.0	10	287	1/2	40	491	R12AAEM406	N5	L5
35.0	10	402	1/2	40	687	R12AAEM509	N7	L7
50.0	10	574	1/2	40	981	R12AAEM506	N10	L10
65.0	10	746	1/2	40	1,276	R12AAEM506	N13	L13
75.0	10	861	1/2	38	1,399	R12AAEM506	N14	L14
100.0	10	1,148	1/2	28	1,374	R12AAEM506	N14	L14
125.0	10	1,434	1/2	22	1,350	R12AAEM506	N14	L14
				6-Way Transverse, Longitudinal Brace Pattern (B13.5)				
150.0	10	1,721	5/8	19	1,399	R58AAEM506	N14	L14
175.0	10	2,008	5/8	16	1,374	R58AAEM506	N14	L14
200.0	10	2,295	5/8	14	1,374	R58AAEM506	N14	L14
225.0	10	2,582	3/4	10	1,104	R34DGB1P06	N12	L12

1. TVL = DL + Fv + ($0.2S_{DS}$/1.4 x Wp). All Terms Are Working Loads. Based On Eccentric Loading, 65% Of Total Load Allocated Per Inboard Rod.
2. Reductions In Actual Installed Brace Spacing Will Result In An Equal Percentage Reduction In Brace Reaction. As An Option When This Occurs ISAT May Substitute An Alternate Anchorage From Tables D1 or D2 Which Meets or Exceeds The Lowered Brace Reaction.
3. At Max. 30 Degree Brace Inclination.
4. Min. 3,000 psi NWC. Any "N Series" Connection May Be Utilized Having A Numeric Designation Equal To Or Higher Than That Shown.
5. Min. 3,000 psi NWC or LWC. Any "L Series" Connection May Be Utilized Having A Numeric Designation Equal To Or Higher Than That Shown.
6. As An Alternate, Brace Anchorage Connections To Structure May Be Employed Using Any Detail From Structural Connections Section "D" Series Details Where Assembly Design Value Meets Or Exceeds Brace Reaction.
7. For Trade Specific Bracing Installation Notes, Refer To Page 8.1 or 10.1.
8. Utilize Any "G" Series Vertical Support Connection Having A Design Value Equal To Or Greater Than The Corresponding "Rod Total Vertical Load".

REVIEWED FOR CODE COMPLIANCE
HCAI
OPM-0403
BY: William Staehlin
DATE: 01-26-2024
CALIFORNIA BUILDING CODE 2022

REGISTERED PROFESSIONAL ENGINEER MARCIN WASAZNIK S-6612 STRUCTURAL STATE OF CALIFORNIA

ISAT
A Division of Tomarco Contractor Speciaities
International Seismic Application Technology
14848 Northam Street, La Mirada, CA 90638
877-999-4728 (Toll Free) 714-523-0845 (Fax)
www.isatsb.com

Rev.1
11/19/18

RIGID BRACING REQUIREMENTS [7]

3-ROD TRAPEZE MOUNTED PIPING (Plumbing, Mechanical, Process, Medical Gas) — **MAXIMUM SEISMIC DESIGN FORCE = 1.00 G's**

Requires Use of ISAT Seismic Brackets. Use of Any Non-ISAT Bracket Voids Engineering. — *2013 California Building Code Compliant*

Maximum Trapeze Load (lbs/lf)	Max. Vertical Support Spacing (ft.)	Inboard [1] Rod Total Vertical Load (lbs)	Min. [8] Vertical Support Rod Dia. (in.)	INBOARD LONGITUDINAL BRACING REQUIREMENTS: Max. [2] Brace Spacing (ft.)	Brace [3] Reaction P (lbs)	Min. Brace Assembly E - Pages	Min. Brace Anchorage [6]: Form Pour [4] Deck Page D1	Min. Brace Anchorage [6]: Metal [5] Deck Page D2
				5-Way Transverse, Longitudinal Brace Pattern (B13.3)				
11.0	10	126	3/8	40	291	R38AAEM306	N3	L3
25.0	10	287	1/2	40	661	R12AAEM509	N7	L7
35.0	10	402	1/2	40	926	R12AAEM506	N10	L10
50.0	10	574	1/2	40	1,322	R12AAEM506	N14	L14
65.0	10	746	1/2	40	1,719	R12AAEM606	N18	L18
75.0	10	861	1/2	40	1,984	R12AAEM606	N20	L20
100.0	10	1,148	1/2	34	2,248	R12BGB2P09	N23	L23
125.0	10	1,434	1/2	26	2,149	R12BGB2P09	N22	L22
150.0	10	1,721	5/8	24	2,380	R58DGB2P09	N24	L24
				6-Way Transverse, Longitudinal Brace Pattern (B13.5)				
175.0	10	2,008	5/8	20	2,314	R58DGB2P09	N24	L24
200.0	10	2,295	5/8	18	2,380	R58DGB2P09	N24	L24
225.0	10	2,582	3/4	16	2,380	R34DGB2P09	N24	L24

1. TVL = DL + Fv + ($0.2S_{DS}$/1.4 x Wp). All Terms Are Working Loads. Based On Eccentric Loading, 65% Of Total Load Allocated Per Inboard Rod.
2. Reductions In Actual Installed Brace Spacing Will Result In An Equal Percentage Reduction In Brace Reaction. As An Option When This Occurs ISAT May Substitute An Alternate Anchorage From Tables D1 or D2 Which Meets or Exceeds The Lowered Brace Reaction.
3. At Max. 50 Degree Brace Inclination.
4. Min. 3,000 psi NWC. Any "N Series" Connection May Be Utilized Having A Numeric Designation Equal To Or Higher Than That Shown.
5. Min. 3,000 psi NWC or LWC. Any "L Series" Connection May Be Utilized Having A Numeric Designation Equal To Or Higher Than That Shown.
6. As An Alternate, Brace Anchorage Connections To Structure May Be Employed Using Any Detail From Structural Connections Section "D" Series Details Where Assembly Design Value Meets Or Exceeds Brace Reaction.
7. For Trade Specific Bracing Installation Notes, Refer To Page 8.1 or 10.1.
8. Utilize Any "G" Series Vertical Support Connection Having A Design Value Equal To Or Greater Than The Corresponding "Rod Total Vertical Load".

REVIEWED FOR CODE COMPLIANCE
HCAI
OPM-0403
BY: William Staehlin
DATE: 01-26-2024
CALIFORNIA BUILDING CODE 2022

REGISTERED PROFESSIONAL ENGINEER MARCIN WASAZNIK S-6612 STRUCTURAL STATE OF CALIFORNIA

ISAT
A Division of Tomarco Contractor Specialties
International Seismic Application Technology
14848 Northam Street, La Mirada, CA 90638
877-999-4728 (Toll Free) 714-523-0845 (Fax)
www.isatsb.com

Rev.1
11/19/18

RIGID BRACING REQUIREMENTS [7]

3-ROD TRAPEZE MOUNTED PIPING (Plumbing, Mechanical, Process, Medical Gas) — **MAXIMUM SEISMIC DESIGN FORCE = 1.00 G's**

Requires Use of ISAT Seismic Brackets. Use of Any Non-ISAT Bracket Voids Engineering. — *2013 California Building Code Compliant*

Maximum Trapeze Load (lbs/lf)	Max. Vertical Support Spacing (ft.)	Inboard [1] Rod Total Vertical Load (lbs)	Min. [8] Vertical Support Rod Dia. (in.)	INBOARD LONGITUDINAL BRACING REQUIREMENTS: Max. [2] Brace Spacing (ft.)	Brace [3] Reaction P (lbs)	Min. Brace Assembly E - Pages	Min. Brace Anchorage [6]: Form Pour [4] Deck Page D1	Min. Brace Anchorage [6]: Metal [5] Deck Page D2
				5-Way Transverse, Longitudinal Brace Pattern (B13.3)				
11.0	10	126	3/8	40	374	R38AAEM406	N4	L4
25.0	10	287	1/2	40	850	R12AAEM506	N9	L9
35.0	10	402	1/2	40	1,190	R12AAEM506	N12	L12
50.0	10	574	1/2	40	1,700	R12AAEM606	N17	L17
65.0	10	746	1/2	40	2,210	R12AAB2P09	N23	L23
75.0	10	861	1/2	38	2,423	R12AAB2P06	N25	L25
100.0	10	1,148	1/2	28	2,380	R12AAB2P09	N24	L24
125.0	10	1,434	1/2	22	2,338	R12AAB2P09	N24	L24
				6-Way Transverse, Longitudinal Brace Pattern (B13.5)				
150.0	10	1,721	5/8	19	2,423	R58AAB2P06	N25	L25
175.0	10	2,008	5/8	16	2,380	R58AAB2P09	N24	L24
200.0	10	2,295	5/8	14	2,380	R58AAB2P09	N24	L24
225.0	10	2,582	3/4	7	1,339	R34DGB1S06	N14	L14

1. TVL = DL + Fv + ($0.2S_{DS}$/1.4 x Wp). All Terms Are Working Loads. Based On Eccentric Loading, 65% Of Total Load Allocated Per Inboard Rod.
2. Reductions In Actual Installed Brace Spacing Will Result In An Equal Percentage Reduction In Brace Reaction. As An Option When This Occurs ISAT May Substitute An Alternate Anchorage From Tables D1 or D2 Which Meets or Exceeds The Lowered Brace Reaction.
3. At Max. 60 Degree Brace Inclination.
4. Min. 3,000 psi NWC. Any "N Series" Connection May Be Utilized Having A Numeric Designation Equal To Or Higher Than That Shown.
5. Min. 3,000 psi NWC or LWC. Any "L Series" Connection May Be Utilized Having A Numeric Designation Equal To Or Higher Than That Shown.
6. As An Alternate, Brace Anchorage Connections To Structure May Be Employed Using Any Detail From Structural Connections Section "D" Series Details Where Assembly Design Value Meets Or Exceeds Brace Reaction.
7. For Trade Specific Bracing Installation Notes, Refer To Page 8.1 or 10.1.
8. Utilize Any "G" Series Vertical Support Connection Having A Design Value Equal To Or Greater Than The Corresponding "Rod Total Vertical Load".

REVIEWED FOR CODE COMPLIANCE
HCAI
OPM-0403
BY: William Staehlin
DATE: 01-26-2024
CALIFORNIA BUILDING CODE 2022

REGISTERED PROFESSIONAL ENGINEER MARCIN WASAZNIK S-6612 STRUCTURAL STATE OF CALIFORNIA

ISAT
A Division of Tomarco Contractor Speciaities
International Seismic Application Technology
14848 Northam Street, La Mirada, CA 90638
877-999-4728 (Toll Free) 714-523-0845 (Fax)
www.isatsb.com

Rev.1
11/19/18

RIGID BRACING REQUIREMENTS [7]

3-ROD TRAPEZE MOUNTED PIPING (Plumbing, Mechanical, Process, Medical Gas) — **MAXIMUM SEISMIC DESIGN FORCE = 0.25 G's**

Requires Use of ISAT Seismic Brackets. Use of Any Non-ISAT Bracket Voids Engineering. — *2013 California Building Code Compliant*

Maximum Trapeze Load (lbs/lf)	Max. Vertical Support Spacing (ft.)	Outboard [1] Rod Total Vertical Load (lbs)	Min. [8] Vertical Support Rod Dia. (in.)	OUTBOARD TRANSVERSE BRACING REQUIREMENTS					OUTBOARD LONGITUDINAL BRACING REQUIREMENTS				
				Max. [2] Brace Spacing (ft.)	Brace [3] Reaction P (lbs)	Min. Brace Assembly E - Pages	Min. Brace Anchorage [6] Form Pour [4] Deck Page D1	Min. Brace Anchorage [6] Metal [5] Deck Page D2	Max. [2] Brace Spacing (ft.)	Brace [3] Reaction P (lbs)	Min. Brace Assembly E - Pages	Min. Brace Anchorage [6] Form Pour [4] Deck Page D1	Min. Brace Anchorage [6] Metal [5] Deck Page D2
				1-Way Transverse Brace Pattern (B13.0)					5-Way Transverse, Longitudinal Brace Pattern (B13.4)				
11.0	10	108	3/8	40	127	R38AAEM306	N2	L2	80	64	R38AAEM306	N1	L1
25.0	10	246	1/2	40	289	R12AAEM306	N3	L3	80	144	R12AAEM306	N2	L2
35.0	10	344	1/2	40	404	R12AAEM406	N5	L5	80	202	R12AAEM306	N3	L3
50.0	10	491	1/2	40	577	R12AAEM406	N6	L6	80	289	R12AAEM306	N3	L3
65.0	10	639	1/2	40	751	R12AAEM509	N8	L8	80	375	R12AAEM406	N4	L4
75.0	10	737	1/2	40	866	R12AAEM506	N9	L9	80	433	R12AAEM406	N5	L5
100.0	10	983	1/2	40	1,155	R12AAEM506	N12	L12	80	577	R12AAEM406	N6	L6
125.0	10	1,229	1/2	40	1,443	R12AAEM506	N15	L15	80	722	R12AAEM509	N8	L8
150.0	10	1,281	1/2	32	1,386	R12AAEM506	N14	L14	64	693	R12AAEM509	N7	L7
				OUTBOARD TRANS., LONGITUDINAL BRACING REQUIR.									
				6-Way Transverse, Longitudinal Brace Pattern (B13.5)									
175.0	10	1,155	1/2	40	1,010	R12AAEM506	N11	L11					
200.0	10	1,320	1/2	40	1,155	R12AAEM506	N12	L12					
225.0	10	1,486	5/8	40	1,299	R58AAEM506	N13	L13					

1. TVL = DL + Fv + ($0.2S_{DS}$/1.4 x Wp). All Terms Are Working Loads. Based On Eccentric Loading, 35% Of Total Load Allocated Per Outboard Rod.
2. Reductions In Actual Installed Brace Spacing Will Result In An Equal Percentage Reduction In Brace Reaction. As An Option When This Occurs ISAT May Substitute An Alternate Anchorage From Tables D1 or D2 Which Meets or Exceeds The Lowered Brace Reaction.
3. At Max. 30 Degree Brace Inclination.
4. Min. 3,000 psi NWC. Any "N Series" Connection May Be Utilized Having A Numeric Designation Equal To Or Higher Than That Shown.
5. Min. 3,000 psi NWC or LWC. Any "L Series" Connection May Be Utilized Having A Numeric Designation Equal To Or Higher Than That Shown.
6. As An Alternate, Brace Anchorage Connections To Structure May Be Employed Using Any Detail From Structural Connections Section "D" Series Details Where Assembly Design Value Meets Or Exceeds Brace Reaction.
7. For Trade Specific Bracing Installation Notes, Refer To Page 8.1 or 10.1.
8. Utilize Any "G" Series Vertical Support Connection Having A Design Value Equal To Or Greater Than The Corresponding "Rod Total Vertical Load".

REVIEWED FOR CODE COMPLIANCE
OPM-0403
DATE 01-26-2024
CALIFORNIA BUILDING CODE 2022

REGISTERED PROFESSIONAL ENGINEER
MARCIN WASAZNIK
S 6612
STRUCTURAL
STATE OF CALIFORNIA

ISAT
A Division of Tomarco Contractor Specialties
International Seismic Application Technology
14848 Northam Street, La Mirada, CA 90638
877-999-4728 (Toll Free) 714-523-0845 (Fax)
www.isatsb.com

Rev. 0
08/03/2018
Page
C19-0.25-30
Outboard

RIGID BRACING REQUIREMENTS [7]

3-ROD TRAPEZE MOUNTED PIPING (Plumbing, Mechanical, Process, Medical Gas) — **MAXIMUM SEISMIC DESIGN FORCE = 0.25 G's**

Requires Use of ISAT Seismic Brackets. Use of Any Non-ISAT Bracket Voids Engineering. — *2013 California Building Code Compliant*

Maximum Trapeze Load (lbs/lf)	Max. Vertical Support Spacing (ft.)	Outboard [1] Rod Total Vertical Load (lbs)	Min. [8] Vertical Support Rod Dia. (in.)	OUTBOARD TRANSVERSE BRACING REQUIREMENTS					OUTBOARD LONGITUDINAL BRACING REQUIREMENTS				
				Max. [2] Brace Spacing (ft.)	Brace [3] Reaction P (lbs)	Min. Brace Assembly E - Pages	Min. Brace Anchorage [6] Form Pour [4] Deck Page D1	Min. Brace Anchorage [6] Metal [5] Deck Page D2	Max. [2] Brace Spacing (ft.)	Brace [3] Reaction P (lbs)	Min. Brace Assembly E - Pages	Min. Brace Anchorage [6] Form Pour [4] Deck Page D1	Min. Brace Anchorage [6] Metal [5] Deck Page D2
				1-Way Transverse Brace Pattern (B13.0)					5-Way Transverse, Longitudinal Brace Pattern (B13.4)				
11.0	10	184	3/8	40	171	R38AAEM306	N2	L2	80	86	R38AAEM306	N1	L1
25.0	10	417	1/2	40	389	R12AAEM406	N4	L4	80	194	R12AAEM306	N2	L2
35.0	10	584	1/2	40	545	R12AAEM406	N6	L6	80	272	R12AAEM306	N3	L3
50.0	10	835	1/2	40	778	R12AAEM509	N8	L8	80	389	R12AAEM406	N4	L4
65.0	10	1,085	1/2	40	1,011	R12AAEM506	N11	L11	80	506	R12AAEM406	N6	L6
75.0	10	1,252	1/2	40	1,167	R12AAEM506	N12	L12	80	583	R12AAEM406	N6	L6
100.0	10	1,670	5/8	40	1,556	R58AAEM606	N16	L16	80	778	R58AAEM509	N8	L8
125.0	10	2,087	3/4	40	1,945	R34DGB2P09	N20	L20	80	972	R34CFB1P06	N10	L10
150.0	10	2,405	3/4	38	2,217	R34DGB2P09	N23	L23	76	1,108	R34CFB1P06	N12	L12
				OUTBOARD TRANS., LONGITUDINAL BRACING REQUIR.									
				6-Way Transverse, Longitudinal Brace Pattern (B13.5)									
175.0	10	1,756	5/8	40	1,361	R58AAEM506	N14	L14					
200.0	10	2,007	5/8	40	1,556	R58AAEM606	N16	L16					
225.0	10	2,258	3/4	40	1,750	R34DGB2P09	N18	L18					

1. TVL = DL + Fv + ($0.2S_{DS}$/1.4 x Wp). All Terms Are Working Loads. Based On Eccentric Loading, 35% Of Total Load Allocated Per Outboard Rod.
2. Reductions In Actual Installed Brace Spacing Will Result In An Equal Percentage Reduction In Brace Reaction. As An Option When This Occurs ISAT May Substitute An Alternate Anchorage From Tables D1 or D2 Which Meets or Exceeds The Lowered Brace Reaction.
3. At Max. 50 Degree Brace Inclination.
4. Min. 3,000 psi NWC. Any "N Series" Connection May Be Utilized Having A Numeric Designation Equal To Or Higher Than That Shown.
5. Min. 3,000 psi NWC or LWC. Any "L Series" Connection May Be Utilized Having A Numeric Designation Equal To Or Higher Than That Shown.
6. As An Alternate, Brace Anchorage Connections To Structure May Be Employed Using Any Detail From Structural Connections Section "D" Series Details Where Assembly Design Value Meets Or Exceeds Brace Reaction.
7. For Trade Specific Bracing Installation Notes, Refer To Page 8.1 or 10.1.
8. Utilize Any "G" Series Vertical Support Connection Having A Design Value Equal To Or Greater Than The Corresponding "Rod Total Vertical Load".

REVIEWED FOR CODE COMPLIANCE
OPM-0403
DATE 01-26-2024
CALIFORNIA BUILDING CODE 2022

REGISTERED PROFESSIONAL ENGINEER MARCIN WASAZNIK S-6612 STRUCTURAL STATE OF CALIFORNIA

ISAT
A Division of Tomarco Contractor Specialties
International Seismic Application Technology
14848 Northam Street, La Mirada, CA 90638
877-999-4728 (Toll Free) 714-523-0845 (Fax)
www.isatsb.com

Rev. 0
08/03/2018
Page
C19-0.25-45
Outboard

RIGID BRACING REQUIREMENTS [7]

3-ROD TRAPEZE MOUNTED PIPING (Plumbing, Mechanical, Process, Medical Gas) — **MAXIMUM SEISMIC DESIGN FORCE = 0.25 G's**

Requires Use of ISAT Seismic Brackets. Use of Any Non-ISAT Bracket Voids Engineering. — *2013 California Building Code Compliant*

Maximum Trapeze Load (lbs/lf)	Max. Vertical Support Spacing (ft.)	Outboard [1] Rod Total Vertical Load (lbs)	Min. [8] Vertical Support Rod Dia. (in.)	OUTBOARD TRANSVERSE BRACING REQUIREMENTS					OUTBOARD LONGITUDINAL BRACING REQUIREMENTS				
				Max. [2] Brace Spacing (ft.)	Brace [3] Reaction P (lbs)	Min. Brace Assembly E - Pages	Min. Brace Anchorage [6] Form Pour [4] Deck Page D1	Min. Brace Anchorage [6] Metal [5] Deck Page D2	Max. [2] Brace Spacing (ft.)	Brace [3] Reaction P (lbs)	Min. Brace Assembly E - Pages	Min. Brace Anchorage [6] Form Pour [4] Deck Page D1	Min. Brace Anchorage [6] Metal [5] Deck Page D2
				1-Way Transverse Brace Pattern (B13.0)					5-Way Transverse, Longitudinal Brace Pattern (B13.4)				
11.0	10	250	3/8	40	220	R38AAEM306	N3	L3	80	110	R38AAEM306	N2	L2
25.0	10	568	1/2	40	500	R12AAEM406	N5	L5	80	250	R12AAEM306	N3	L3
35.0	10	796	1/2	40	700	R12AAEM509	N7	L7	80	350	R12AAEM406	N4	L4
50.0	10	1,137	1/2	40	1,000	R12AAEM506	N10	L10	80	500	R12AAEM406	N5	L5
65.0	10	1,478	5/8	40	1,300	R58AAEM506	N13	L13	80	650	R58AAEM406	N7	L7
75.0	10	1,633	5/8	38	1,425	R58AAEM506	N15	L15	76	713	R58AAEM509	N8	L8
100.0	10	1,693	5/8	28	1,400	R58AAEM506	N14	L14	56	700	R58AAEM509	N7	L7
125.0	10	1,753	5/8	22	1,375	R58AAEM506	N14	L14	44	688	R58AAEM509	N7	L7
150.0	10	1,813	5/8	18	1,350	R58AAEM506	N14	L14	36	675	R58AAEM509	N7	L7
				OUTBOARD TRANS., LONGITUDINAL BRACING REQUIR.									
				6-Way Transverse, Longitudinal Brace Pattern (B13.5)									
175.0	10	1,946	5/8	32	1,400	R58AAEM506	N14	L14					
200.0	10	2,031	5/8	28	1,400	R58AAEM506	N14	L14					
225.0	10	2,175	5/8	26	1,463	R58AAEM606	N15	L15					

1. TVL = DL + Fv + ($0.2S_{DS}$/1.4 x Wp). All Terms Are Working Loads. Based On Eccentric Loading, 35% Of Total Load Allocated Per Outboard Rod.
2. Reductions In Actual Installed Brace Spacing Will Result In An Equal Percentage Reduction In Brace Reaction. As An Option When This Occurs ISAT May Substitute An Alternate Anchorage From Tables D1 or D2 Which Meets or Exceeds The Lowered Brace Reaction.
3. At Max. 60 Degree Brace Inclination.
4. Min. 3,000 psi NWC. Any "N Series" Connection May Be Utilized Having A Numeric Designation Equal To Or Higher Than That Shown.
5. Min. 3,000 psi NWC or LWC. Any "L Series" Connection May Be Utilized Having A Numeric Designation Equal To Or Higher Than That Shown.
6. As An Alternate, Brace Anchorage Connections To Structure May Be Employed Using Any Detail From Structural Connections Section "D" Series Details Where Assembly Design Value Meets Or Exceeds Brace Reaction.
7. For Trade Specific Bracing Installation Notes, Refer To Page 8.1 or 10.1.
8. Utilize Any "G" Series Vertical Support Connection Having A Design Value Equal To Or Greater Than The Corresponding "Rod Total Vertical Load".

REVIEWED FOR CODE COMPLIANCE
OPM-0403
DATE 01-26-2024
CALIFORNIA BUILDING CODE 2022

REGISTERED PROFESSIONAL ENGINEER
MARCIN WASAZNIK
S-6612
STRUCTURAL
STATE OF CALIFORNIA

ISAT
A Division of Tomarco Contractor Specialties

International Seismic Application Technology
14848 Northam Street, La Mirada, CA 90638
877-999-4728 (Toll Free) 714-523-0845 (Fax)
www.isatsb.com

Rev. 0
08/03/2018

Page
C19-0.25-60
Outboard

RIGID BRACING REQUIREMENTS [7]

3-ROD TRAPEZE MOUNTED PIPING (Plumbing, Mechanical, Process, Medical Gas) — **MAXIMUM SEISMIC DESIGN FORCE = 0.50 G's**

Requires Use of ISAT Seismic Brackets. Use of Any Non-ISAT Bracket Voids Engineering. — *2013 California Building Code Compliant*

Maximum Trapeze Load (lbs/lf)	Max. Vertical Support Spacing (ft.)	Outboard [1] Rod Total Vertical Load (lbs)	Min. [8] Vertical Support Rod Dia. (in.)	OUTBOARD TRANSVERSE BRACING REQUIREMENTS					OUTBOARD LONGITUDINAL BRACING REQUIREMENTS				
				Max. [2] Brace Spacing (ft.)	Brace [3] Reaction P (lbs)	Min. Brace Assembly E - Pages	Min. Brace Anchorage [6] Form Pour [4] Deck Page D1	Min. Brace Anchorage [6] Metal [5] Deck Page D2	Max. [2] Brace Spacing (ft.)	Brace [3] Reaction P (lbs)	Min. Brace Assembly E - Pages	Min. Brace Anchorage [6] Form Pour [4] Deck Page D1	Min. Brace Anchorage [6] Metal [5] Deck Page D2
				1-Way Transverse Brace Pattern (B13.0)					5-Way Transverse, Longitudinal Brace Pattern (B13.4)				
11.0	10	179	3/8	40	254	R38AAEM306	N3	L3	80	127	R38AAEM306	N2	L2
25.0	10	407	1/2	40	577	R12AAEM406	N6	L6	80	289	R12AAEM306	N3	L3
35.0	10	570	1/2	40	808	R12AAEM506	N9	L9	80	404	R12AAEM406	N5	L5
50.0	10	814	1/2	40	1,155	R12AAEM506	N12	L12	80	577	R12AAEM406	N6	L6
65.0	10	1,017	1/2	38	1,426	R12AAEM506	N15	L15	76	713	R12AAEM509	N8	L8
75.0	10	1,028	1/2	32	1,386	R12AAEM506	N14	L14	64	693	R12AAEM509	N7	L7
100.0	10	1,112	1/2	24	1,386	R12AAEM506	N14	L14	48	693	R12AAEM509	N7	L7
125.0	10	1,229	1/2	20	1,443	R12AAEM506	N15	L15	40	722	R12AAEM509	N8	L8
150.0	10	1,281	1/2	16	1,386	R12AAEM506	N14	L14	32	693	R12AAEM509	N7	L7
				OUTBOARD TRANS., LONGITUDINAL BRACING REQUIR.									
				6-Way Transverse, Longitudinal Brace Pattern (B13.5)									
175.0	10	1,381	1/2	28	1,415	R12AAEM506	N15	L15					
200.0	10	1,482	5/8	25	1,443	R58AAEM506	N15	L15					
225.0	10	1,558	5/8	22	1,429	R58AAEM506	N15	L15					

1. TVL = DL + Fv + ($0.2S_{DS}$/1.4 x Wp). All Terms Are Working Loads. Based On Eccentric Loading, 35% Of Total Load Allocated Per Outboard Rod.
2. Reductions In Actual Installed Brace Spacing Will Result In An Equal Percentage Reduction In Brace Reaction. As An Option When This Occurs ISAT May Substitute An Alternate Anchorage From Tables D1 or D2 Which Meets or Exceeds The Lowered Brace Reaction.
3. At Max. 30 Degree Brace Inclination.
4. Min. 3,000 psi NWC. Any "N Series" Connection May Be Utilized Having A Numeric Designation Equal To Or Higher Than That Shown.
5. Min. 3,000 psi NWC or LWC. Any "L Series" Connection May Be Utilized Having A Numeric Designation Equal To Or Higher Than That Shown.
6. As An Alternate, Brace Anchorage Connections To Structure May Be Employed Using Any Detail From Structural Connections Section "D" Series Details Where Assembly Design Value Meets Or Exceeds Brace Reaction.
7. For Trade Specific Bracing Installation Notes, Refer To Page 8.1 or 10.1.
8. Utilize Any "G" Series Vertical Support Connection Having A Design Value Equal To Or Greater Than The Corresponding "Rod Total Vertical Load".

REVIEWED FOR CODE COMPLIANCE
OPM-0403
DATE 01-26-2024
CALIFORNIA BUILDING CODE 2022

REGISTERED PROFESSIONAL ENGINEER
MARCIN WASAZNIK
S 6612
STRUCTURAL
STATE OF CALIFORNIA

ISAT
A Division of Tomarco Contractor Specialties
International Seismic Application Technology
14848 Northam Street, La Mirada, CA 90638
877-999-4728 (Toll Free) 714-523-0845 (Fax)
www.isatsb.com

Rev. 0
08/03/2018

RIGID BRACING REQUIREMENTS [7]

3-ROD TRAPEZE MOUNTED PIPING (Plumbing, Mechanical, Process, Medical Gas) — **MAXIMUM SEISMIC DESIGN FORCE = 0.50 G's**

Requires Use of ISAT Seismic Brackets. Use of Any Non-ISAT Bracket Voids Engineering. — *2013 California Building Code Compliant*

Maximum Trapeze Load (lbs/lf)	Max. Vertical Support Spacing (ft.)	Outboard [1] Rod Total Vertical Load (lbs)	Min. [8] Vertical Support Rod Dia. (in.)	OUTBOARD TRANSVERSE BRACING REQUIREMENTS					OUTBOARD LONGITUDINAL BRACING REQUIREMENTS				
				Max. [2] Brace Spacing (ft.)	Brace [3] Reaction P (lbs)	Min. Brace Assembly E - Pages	Min. Brace Anchorage [6] Form Pour [4] Deck Page D1	Min. Brace Anchorage [6] Metal [5] Deck Page D2	Max. [2] Brace Spacing (ft.)	Brace [3] Reaction P (lbs)	Min. Brace Assembly E - Pages	Min. Brace Anchorage [6] Form Pour [4] Deck Page D1	Min. Brace Anchorage [6] Metal [5] Deck Page D2
				1-Way Transverse Brace Pattern (B13.0)					5-Way Transverse, Longitudinal Brace Pattern (B13.4)				
11.0	10	330	3/8	40	342	R38AAEM406	N4	L4	80	171	R38AAEM306	N2	L2
25.0	10	751	1/2	40	778	R12AAEM509	N8	L8	80	389	R12AAEM406	N4	L4
35.0	10	1,051	1/2	40	1,089	R12AAEM506	N11	L11	80	545	R12AAEM406	N6	L6
50.0	10	1,501	5/8	40	1,556	R58AAEM606	N16	L16	80	778	R58AAEM509	N8	L8
65.0	10	1,952	3/4	40	2,022	R34DGB2P09	N21	L21	80	1,011	R34CFB1P06	N11	L11
75.0	10	2,152	3/4	38	2,217	R34DGB2P09	N23	L23	76	1,108	R34CFB1P06	N12	L12
100.0	10	2,203	3/4	28	2,178	R34DGB2P09	N22	L22	56	1,089	R34CFB1P06	N11	L11
125.0	10	2,254	3/4	22	2,139	R34DGB2P09	N22	L22	44	1,070	R34CFB1P06	N11	L11
150.0	10	2,305	3/4	18	2,100	R34DGB2P09	N22	L22	36	1,050	R34CFB1P06	N11	L11
				OUTBOARD TRANS., LONGITUDINAL BRACING REQUIR.									
				6-Way Transverse, Longitudinal Brace Pattern (B13.5)									
175.0	10	2,514	3/4	33	2,246	R34DGB2P09	N23	L23					
200.0	10	2,607	3/4	29	2,256	R34DGB2P09	N23	L23					
225.0	10	2,708	3/4	26	2,275	R34DGB2P09	N23	L23					

1. TVL = DL + Fv + ($0.2S_{DS}$/1.4 x Wp). All Terms Are Working Loads. Based On Eccentric Loading, 35% Of Total Load Allocated Per Outboard Rod.
2. Reductions In Actual Installed Brace Spacing Will Result In An Equal Percentage Reduction In Brace Reaction. As An Option When This Occurs ISAT May Substitute An Alternate Anchorage From Tables D1 or D2 Which Meets or Exceeds The Lowered Brace Reaction.
3. At Max. 50 Degree Brace Inclination.
4. Min. 3,000 psi NWC. Any "N Series" Connection May Be Utilized Having A Numeric Designation Equal To Or Higher Than That Shown.
5. Min. 3,000 psi NWC or LWC. Any "L Series" Connection May Be Utilized Having A Numeric Designation Equal To Or Higher Than That Shown.
6. As An Alternate, Brace Anchorage Connections To Structure May Be Employed Using Any Detail From Structural Connections Section "D" Series Details Where Assembly Design Value Meets Or Exceeds Brace Reaction.
7. For Trade Specific Bracing Installation Notes, Refer To Page 8.1 or 10.1.
8. Utilize Any "G" Series Vertical Support Connection Having A Design Value Equal To Or Greater Than The Corresponding "Rod Total Vertical Load".

REVIEWED FOR CODE COMPLIANCE
OPM-0403
DATE 01-26-2024
CALIFORNIA BUILDING CODE 2022

REGISTERED PROFESSIONAL ENGINEER MARCIN WASAZNIK S-6612 STRUCTURAL STATE OF CALIFORNIA

ISAT
A Division of Tomarco Contractor Specialties
International Seismic Application Technology
14848 Northam Street, La Mirada, CA 90638
877-999-4728 (Toll Free) 714-523-0845 (Fax)
www.isatsb.com

Rev. 0
08/03/2018

RIGID BRACING REQUIREMENTS [7]

3-ROD TRAPEZE MOUNTED PIPING (Plumbing, Mechanical, Process, Medical Gas) — **MAXIMUM SEISMIC DESIGN FORCE = 0.50 G's**

Requires Use of ISAT Seismic Brackets. Use of Any Non-ISAT Bracket Voids Engineering. — *2013 California Building Code Compliant*

Maximum Trapeze Load (lbs/lf)	Max. Vertical Support Spacing (ft.)	Outboard [1] Rod Total Vertical Load (lbs)	Min. [8] Vertical Support Rod Dia. (in.)	OUTBOARD TRANSVERSE BRACING REQUIREMENTS					OUTBOARD LONGITUDINAL BRACING REQUIREMENTS				
				Max. [2] Brace Spacing (ft.)	Brace [3] Reaction P (lbs)	Min. Brace Assembly E - Pages	Min. Brace Anchorage [6] Form Pour [4] Deck Page D1	Min. Brace Anchorage [6] Metal [5] Deck Page D2	Max. [2] Brace Spacing (ft.)	Brace [3] Reaction P (lbs)	Min. Brace Assembly E - Pages	Min. Brace Anchorage [6] Form Pour [4] Deck Page D1	Min. Brace Anchorage [6] Metal [5] Deck Page D2
				1-Way Transverse Brace Pattern (B13.0)					5-Way Transverse, Longitudinal Brace Pattern (B13.4)				
11.0	10	463	1/2	40	440	R12AAEM406	N5	L5	80	220	R12AAEM306	N3	L3
25.0	10	1,053	1/2	40	1,000	R12AAEM506	N10	L10	80	500	R12AAEM406	N5	L5
35.0	10	1,474	5/8	40	1,400	R58AAEM506	N14	L14	80	700	R58AAEM509	N7	L7
50.0	10	1,524	5/8	28	1,400	R58AAEM506	N14	L14	56	700	R58AAEM509	N7	L7
65.0	10	1,604	5/8	22	1,430	R58AAEM506	N15	L15	44	715	R58AAEM509	N8	L8
75.0	10	1,560	5/8	18	1,350	R58AAEM506	N14	L14	36	675	R58AAEM509	N7	L7
100.0	10	1,693	5/8	14	1,400	R58AAEM506	N14	L14	28	700	R58AAEM509	N7	L7
125.0	10	1,632	5/8	10	1,250	R58AAEM506	N13	L13	20	625	R58AAEM406	N7	L7
				OUTBOARD TRANS., LONGITUDINAL BRACING REQUIR.									
				6-Way Transverse, Longitudinal Brace Pattern (B13.5)									
150.0	10	1,886	5/8	19	1,425	R58AAEM506	N15	L15					
175.0	10	1,946	5/8	16	1,400	R58AAEM506	N14	L14					
200.0	10	2,031	5/8	14	1,400	R58AAEM506	N14	L14					
225.0	10	2,175	5/8	13	1,463	R58AAEM606	N15	L15					

1. TVL = DL + Fv + ($0.2S_{DS}$/1.4 x Wp). All Terms Are Working Loads. Based On Eccentric Loading, 35% Of Total Load Allocated Per Outboard Rod.
2. Reductions In Actual Installed Brace Spacing Will Result In An Equal Percentage Reduction In Brace Reaction. As An Option When This Occurs ISAT May Substitute An Alternate Anchorage From Tables D1 or D2 Which Meets or Exceeds The Lowered Brace Reaction.
3. At Max. 60 Degree Brace Inclination.
4. Min. 3,000 psi NWC. Any "N Series" Connection May Be Utilized Having A Numeric Designation Equal To Or Higher Than That Shown.
5. Min. 3,000 psi NWC or LWC. Any "L Series" Connection May Be Utilized Having A Numeric Designation Equal To Or Higher Than That Shown.
6. As An Alternate, Brace Anchorage Connections To Structure May Be Employed Using Any Detail From Structural Connections Section "D" Series Details Where Assembly Design Value Meets Or Exceeds Brace Reaction.
7. For Trade Specific Bracing Installation Notes, Refer To Page 8.1 or 10.1.
8. Utilize Any "G" Series Vertical Support Connection Having A Design Value Equal To Or Greater Than The Corresponding "Rod Total Vertical Load".

REVIEWED FOR CODE COMPLIANCE
OPM-0403
DATE 01-26-2024
CALIFORNIA BUILDING CODE 2022

REGISTERED PROFESSIONAL ENGINEER MARCIN WASAZNIK S-6612 STRUCTURAL STATE OF CALIFORNIA

ISAT
A Division of Tomarco Contractor Specialties
International Seismic Application Technology
14848 Northam Street, La Mirada, CA 90638
877-999-4728 (Toll Free) 714-523-0845 (Fax)
www.isatsb.com

Rev. 0
08/03/2018

RIGID BRACING REQUIREMENTS [7]

3-ROD TRAPEZE MOUNTED PIPING (Plumbing, Mechanical, Process, Medical Gas) — **MAXIMUM SEISMIC DESIGN FORCE = 0.75 G's**

Requires Use of ISAT Seismic Brackets. Use of Any Non-ISAT Bracket Voids Engineering. — *2013 California Building Code Compliant*

Maximum Trapeze Load (lbs/lf)	Max. Vertical Support Spacing (ft.)	Outboard [1] Rod Total Vertical Load (lbs)	Min. [8] Vertical Support Rod Dia. (in.)	OUTBOARD TRANSVERSE BRACING REQUIREMENTS					OUTBOARD LONGITUDINAL BRACING REQUIREMENTS				
				Max. [2] Brace Spacing (ft.)	Brace [3] Reaction P (lbs)	Min. Brace Assembly E - Pages	Min. Brace Anchorage [6] Form Pour [4] Deck Page D1	Min. Brace Anchorage [6] Metal [5] Deck Page D2	Max. [2] Brace Spacing (ft.)	Brace [3] Reaction P (lbs)	Min. Brace Assembly E - Pages	Min. Brace Anchorage [6] Form Pour [4] Deck Page D1	Min. Brace Anchorage [6] Metal [5] Deck Page D2
				1-Way Transverse Brace Pattern (B13.0)					5-Way Transverse, Longitudinal Brace Pattern (B13.4)				
11.0	10	250	3/8	40	381	R38AAEM406	N4	L4	80	191	R38AAEM306	N2	L2
25.0	10	568	1/2	40	866	R12AAEM506	N9	L9	80	433	R12AAEM406	N5	L5
35.0	10	796	1/2	40	1,212	R12AAEM506	N13	L13	80	606	R12AAEM406	N7	L7
50.0	10	943	1/2	32	1,386	R12AAEM506	N14	L14	64	693	R12AAEM509	N7	L7
65.0	10	975	1/2	24	1,351	R12AAEM506	N14	L14	48	675	R12AAEM509	N7	L7
75.0	10	1,052	1/2	22	1,429	R12AAEM506	N15	L15	44	714	R12AAEM509	N8	L8
100.0	10	1,112	1/2	16	1,386	R12AAEM506	N14	L14	32	693	R12AAEM509	N7	L7
125.0	10	1,148	1/2	12	1,299	R12AAEM506	N13	L13	24	650	R12AAEM406	N7	L7
150.0	10	1,232	1/2	10	1,299	R12AAEM506	N13	L13	20	650	R12AAEM406	N7	L7
				OUTBOARD TRANS., LONGITUDINAL BRACING REQUIR.									
				6-Way Transverse, Longitudinal Brace Pattern (B13.5)									
175.0	10	1,395	1/2	19	1,440	R12AAEM506	N15	L15					
200.0	10	1,450	1/2	16	1,386	R12AAEM506	N14	L14					
225.0	10	1,522	5/8	14	1,364	R58AAEM506	N14	L14					

1. TVL = DL + Fv + ($0.2S_{DS}$/1.4 x Wp). All Terms Are Working Loads. Based On Eccentric Loading, 35% Of Total Load Allocated Per Outboard Rod.
2. Reductions In Actual Installed Brace Spacing Will Result In An Equal Percentage Reduction In Brace Reaction. As An Option When This Occurs ISAT May Substitute An Alternate Anchorage From Tables D1 or D2 Which Meets or Exceeds The Lowered Brace Reaction.
3. At Max. 30 Degree Brace Inclination.
4. Min. 3,000 psi NWC. Any "N Series" Connection May Be Utilized Having A Numeric Designation Equal To Or Higher Than That Shown.
5. Min. 3,000 psi NWC or LWC. Any "L Series" Connection May Be Utilized Having A Numeric Designation Equal To Or Higher Than That Shown.
6. As An Alternate, Brace Anchorage Connections To Structure May Be Employed Using Any Detail From Structural Connections Section "D" Series Details Where Assembly Design Value Meets Or Exceeds Brace Reaction.
7. For Trade Specific Bracing Installation Notes, Refer To Page 8.1 or 10.1.
8. Utilize Any "G" Series Vertical Support Connection Having A Design Value Equal To Or Greater Than The Corresponding "Rod Total Vertical Load".

REVIEWED FOR CODE COMPLIANCE
OPM-0403
DATE 01-26-2024
CALIFORNIA BUILDING CODE 2022

REGISTERED PROFESSIONAL ENGINEER
MARCIN WASAZNIK
S 6612
STRUCTURAL
STATE OF CALIFORNIA

ISAT
A Division of Tomarco Contractor Specialties
International Seismic Application Technology
14848 Northam Street, La Mirada, CA 90638
877-999-4728 (Toll Free) 714-523-0845 (Fax)
www.isatsb.com

Rev. 0
08/03/2018
Page
C19-0.75-30
Outboard

RIGID BRACING REQUIREMENTS [7]

3-ROD TRAPEZE MOUNTED PIPING (Plumbing, Mechanical, Process, Medical Gas) — **MAXIMUM SEISMIC DESIGN FORCE = 0.75 G's**

Requires Use of ISAT Seismic Brackets. Use of Any Non-ISAT Bracket Voids Engineering. — *2013 California Building Code Compliant*

Maximum Trapeze Load (lbs/lf)	Max. Vertical Support Spacing (ft.)	Outboard [1] Rod Total Vertical Load (lbs)	Min. [8] Vertical Support Rod Dia. (in.)	OUTBOARD TRANSVERSE BRACING REQUIREMENTS					OUTBOARD LONGITUDINAL BRACING REQUIREMENTS				
				Max. [2] Brace Spacing (ft.)	Brace [3] Reaction P (lbs)	Min. Brace Assembly E - Pages	Min. Brace Anchorage [6] Form Pour [4] Deck Page D1	Min. Brace Anchorage [6] Metal [5] Deck Page D2	Max. [2] Brace Spacing (ft.)	Brace [3] Reaction P (lbs)	Min. Brace Assembly E - Pages	Min. Brace Anchorage [6] Form Pour [4] Deck Page D1	Min. Brace Anchorage [6] Metal [5] Deck Page D2
				1-Way Transverse Brace Pattern (B13.0)					5-Way Transverse, Longitudinal Brace Pattern (B13.4)				
11.0	10	477	1/2	40	513	R12AAEM406	N6	L6	80	257	R12AAEM306	N3	L3
25.0	10	1,084	5/8	40	1,167	R58AAEM506	N12	L12	80	583	R58AAEM406	N6	L6
35.0	10	1,517	3/4	40	1,634	R34CFB2P12	N17	L17	80	817	R34CFB1P09	N9	L9
50.0	10	2,067	3/4	38	2,217	R34DGB2P09	N23	L23	76	1,108	R34CFB1P06	N12	L12
65.0	10	2,038	3/4	28	2,124	R34DGB2P09	N22	L22	56	1,062	R34CFB1P06	N11	L11
75.0	10	2,052	3/4	24	2,100	R34DGB2P09	N22	L22	48	1,050	R34CFB1P06	N11	L11
100.0	10	2,136	3/4	18	2,100	R34DGB2P09	N22	L22	36	1,050	R34CFB1P06	N11	L11
125.0	10	2,171	3/4	14	2,042	R34DGB2P09	N21	L21	28	1,021	R34CFB1P06	N11	L11
150.0	10	2,305	3/4	12	2,100	R34DGB2P09	N22	L22	24	1,050	R34CFB1P06	N11	L11
				OUTBOARD TRANS., LONGITUDINAL BRACING REQUIR.									
				6-Way Transverse, Longitudinal Brace Pattern (B13.5)									
175.0	10	2,514	3/4	22	2,246	R34DGB2P09	N23	L23					
200.0	10	2,574	3/4	19	2,217	R34DGB2P09	N23	L23					
225.0	10	2,671	3/4	17	2,231	R34DGB2P09	N23	L23					

1. TVL = DL + Fv + ($0.2S_{DS}$/1.4 x Wp). All Terms Are Working Loads. Based On Eccentric Loading, 35% Of Total Load Allocated Per Outboard Rod.
2. Reductions In Actual Installed Brace Spacing Will Result In An Equal Percentage Reduction In Brace Reaction. As An Option When This Occurs ISAT May Substitute An Alternate Anchorage From Tables D1 or D2 Which Meets or Exceeds The Lowered Brace Reaction.
3. At Max. 50 Degree Brace Inclination.
4. Min. 3,000 psi NWC. Any "N Series" Connection May Be Utilized Having A Numeric Designation Equal To Or Higher Than That Shown.
5. Min. 3,000 psi NWC or LWC. Any "L Series" Connection May Be Utilized Having A Numeric Designation Equal To Or Higher Than That Shown.
6. As An Alternate, Brace Anchorage Connections To Structure May Be Employed Using Any Detail From Structural Connections Section "D" Series Details Where Assembly Design Value Meets Or Exceeds Brace Reaction.
7. For Trade Specific Bracing Installation Notes, Refer To Page 8.1 or 10.1.
8. Utilize Any "G" Series Vertical Support Connection Having A Design Value Equal To Or Greater Than The Corresponding "Rod Total Vertical Load".

REVIEWED FOR CODE COMPLIANCE
ISAT
OPM-0403
DATE 1-26-2024
CALIFORNIA BUILDING CODE 2022

REGISTERED PROFESSIONAL ENGINEER MARCIN WASAZNIK S-6612 STRUCTURAL STATE OF CALIFORNIA

ISAT
A Division of Tomarco Contractor Specialties
International Seismic Application Technology
14848 Northam Street, La Mirada, CA 90638
877-999-4728 (Toll Free) 714-523-0845 (Fax)
www.isatsb.com

Rev. 0
08/03/2018
Page
C19-0.75-45
Outboard

RIGID BRACING REQUIREMENTS [7]

3-ROD TRAPEZE MOUNTED PIPING (Plumbing, Mechanical, Process, Medical Gas) — **MAXIMUM SEISMIC DESIGN FORCE = 0.75 G's**

Requires Use of ISAT Seismic Brackets. Use of Any Non-ISAT Bracket Voids Engineering. — *2013 California Building Code Compliant*

Maximum Trapeze Load (lbs/lf)	Max. Vertical Support Spacing (ft.)	Outboard [1] Rod Total Vertical Load (lbs)	Min. [8] Vertical Support Rod Dia. (in.)	OUTBOARD TRANSVERSE BRACING REQUIREMENTS					OUTBOARD LONGITUDINAL BRACING REQUIREMENTS				
				Max. [2] Brace Spacing (ft.)	Brace [3] Reaction P (lbs)	Min. Brace Assembly E - Pages	Min. Brace Anchorage [6] Form Pour [4] Deck Page D1	Min. Brace Anchorage [6] Metal [5] Deck Page D2	Max. [2] Brace Spacing (ft.)	Brace [3] Reaction P (lbs)	Min. Brace Assembly E - Pages	Min. Brace Anchorage [6] Form Pour [4] Deck Page D1	Min. Brace Anchorage [6] Metal [5] Deck Page D2
				1-Way Transverse Brace Pattern (B13.0)					5-Way Transverse, Longitudinal Brace Pattern (B13.4)				
11.0	10	676	1/2	40	660	R12AAEM406	N7	L7	80	330	R12AAEM409	N4	L4
25.0	10	1,464	5/8	38	1,425	R58AAEM506	N15	L15	76	713	R58AAEM509	N8	L8
35.0	10	1,440	5/8	26	1,365	R58AAEM506	N14	L14	52	683	R58AAEM509	N7	L7
50.0	10	1,476	5/8	18	1,350	R58AAEM506	N14	L14	36	675	R58AAEM509	N7	L7
65.0	10	1,541	5/8	14	1,365	R58AAEM506	N14	L14	28	683	R58AAEM509	N7	L7
75.0	10	1,560	5/8	12	1,350	R58AAEM506	N14	L14	24	675	R58AAEM509	N7	L7
				OUTBOARD TRANS., LONGITUDINAL BRACING REQUIR.									
				6-Way Transverse, Longitudinal Brace Pattern (B13.5)									
100.0	10	1,717	5/8	19	1,425	R58AAEM506	N15	L15					
125.0	10	1,783	5/8	15	1,406	R58AAEM506	N15	L15					
150.0	10	1,922	5/8	13	1,463	R58AAEM606	N15	L15					
175.0	10	1,989	5/8	11	1,444	R58AAEM506	N15	L15					
200.0	10	1,982	5/8	9	1,350	R58AAEM506	N14	L14					
225.0	10	2,067	5/8	8	1,350	R58AAEM506	N14	L14					

1. TVL = DL + Fv + ($0.2S_{DS}$/1.4 x Wp). All Terms Are Working Loads. Based On Eccentric Loading, 35% Of Total Load Allocated Per Outboard Rod.
2. Reductions In Actual Installed Brace Spacing Will Result In An Equal Percentage Reduction In Brace Reaction. As An Option When This Occurs ISAT May Substitute An Alternate Anchorage From Tables D1 or D2 Which Meets or Exceeds The Lowered Brace Reaction.
3. At Max. 60 Degree Brace Inclination.
4. Min. 3,000 psi NWC. Any "N Series" Connection May Be Utilized Having A Numeric Designation Equal To Or Higher Than That Shown.
5. Min. 3,000 psi NWC or LWC. Any "L Series" Connection May Be Utilized Having A Numeric Designation Equal To Or Higher Than That Shown.
6. As An Alternate, Brace Anchorage Connections To Structure May Be Employed Using Any Detail From Structural Connections Section "D" Series Details Where Assembly Design Value Meets Or Exceeds Brace Reaction.
7. For Trade Specific Bracing Installation Notes, Refer To Page 8.1 or 10.1.
8. Utilize Any "G" Series Vertical Support Connection Having A Design Value Equal To Or Greater Than The Corresponding "Rod Total Vertical Load".

REVIEWED FOR CODE COMPLIANCE BY William Staehlin DATE 01-26-2024 CALIFORNIA BUILDING CODE 2022

REGISTERED PROFESSIONAL ENGINEER MARCIN WASAZNIK S-6612 STRUCTURAL STATE OF CALIFORNIA

ISAT
A Division of Tomarco Contractor Specialties
International Seismic Application Technology
14848 Northam Street, La Mirada, CA 90638
877-999-4728 (Toll Free) 714-523-0845 (Fax)
www.isatsb.com

Rev. 0
08/03/2018
Page
C19-0.75-60
Outboard

RIGID BRACING REQUIREMENTS [7]

3-ROD TRAPEZE MOUNTED PIPING (Plumbing, Mechanical, Process, Medical Gas) — **MAXIMUM SEISMIC DESIGN FORCE = 1.00 G's**

Requires Use of ISAT Seismic Brackets. Use of Any Non-ISAT Bracket Voids Engineering. — *2013 California Building Code Compliant*

Maximum Trapeze Load (lbs/lf)	Max. Vertical Support Spacing (ft.)	Outboard [1] Rod Total Vertical Load (lbs)	Min. [8] Vertical Support Rod Dia. (in.)	OUTBOARD TRANSVERSE BRACING REQUIREMENTS					OUTBOARD LONGITUDINAL BRACING REQUIREMENTS				
				Max. [2] Brace Spacing (ft.)	Brace [3] Reaction P (lbs)	Min. Brace Assembly E - Pages	Min. Brace Anchorage [6] Form Pour [4] Deck Page D1	Min. Brace Anchorage [6] Metal [5] Deck Page D2	Max. [2] Brace Spacing (ft.)	Brace [3] Reaction P (lbs)	Min. Brace Assembly E - Pages	Min. Brace Anchorage [6] Form Pour [4] Deck Page D1	Min. Brace Anchorage [6] Metal [5] Deck Page D2
				1-Way Transverse Brace Pattern (B13.0)					5-Way Transverse, Longitudinal Brace Pattern (B13.4)				
11.0	10	321	3/8	40	508	R38AAEM406	N6	L6	80	254	R38AAEM306	N3	L3
25.0	10	730	1/2	40	1,155	R12AAEM506	N12	L12	80	577	R12AAEM406	N6	L6
35.0	10	886	1/2	34	1,374	R12AAEM506	N14	L14	68	687	R12AAEM509	N7	L7
50.0	10	943	1/2	24	1,386	R12AAEM506	N14	L14	48	693	R12AAEM509	N7	L7
65.0	10	975	1/2	18	1,351	R12AAEM506	N14	L14	36	675	R12AAEM509	N7	L7
75.0	10	1,028	1/2	16	1,386	R12AAEM506	N14	L14	32	693	R12AAEM509	N7	L7
100.0	10	1,112	1/2	12	1,386	R12AAEM506	N14	L14	24	693	R12AAEM509	N7	L7
125.0	10	1,229	1/2	10	1,443	R12AAEM506	N15	L15	20	722	R12AAEM509	N8	L8
				OUTBOARD TRANS., LONGITUDINAL BRACING REQUIR.									
				6-Way Transverse, Longitudinal Brace Pattern (B13.5)									
150.0	10	1,281	1/2	16	1,386	R12AAEM506	N14	L14					
175.0	10	1,381	1/2	14	1,415	R12AAEM506	N15	L15					
200.0	10	1,450	1/2	12	1,386	R12AAEM506	N14	L14					
225.0	10	1,558	5/8	11	1,429	R58AAEM506	N15	L15					

1. TVL = DL + Fv + ($0.2S_{DS}$/1.4 x Wp). All Terms Are Working Loads. Based On Eccentric Loading, 35% Of Total Load Allocated Per Outboard Rod.
2. Reductions In Actual Installed Brace Spacing Will Result In An Equal Percentage Reduction In Brace Reaction. As An Option When This Occurs ISAT May Substitute An Alternate Anchorage From Tables D1 or D2 Which Meets or Exceeds The Lowered Brace Reaction.
3. At Max. 30 Degree Brace Inclination.
4. Min. 3,000 psi NWC. Any "N Series" Connection May Be Utilized Having A Numeric Designation Equal To Or Higher Than That Shown.
5. Min. 3,000 psi NWC or LWC. Any "L Series" Connection May Be Utilized Having A Numeric Designation Equal To Or Higher Than That Shown.
6. As An Alternate, Brace Anchorage Connections To Structure May Be Employed Using Any Detail From Structural Connections Section "D" Series Details Where Assembly Design Value Meets Or Exceeds Brace Reaction.
7. For Trade Specific Bracing Installation Notes, Refer To Page 8.1 or 10.1.
8. Utilize Any "G" Series Vertical Support Connection Having A Design Value Equal To Or Greater Than The Corresponding "Rod Total Vertical Load".

REVIEWED FOR CODE COMPLIANCE
OPM-0403
DATE 01-26-2024
CALIFORNIA BUILDING CODE 2022

REGISTERED PROFESSIONAL ENGINEER
MARCIN WASAZNIK
S 6612
STRUCTURAL
STATE OF CALIFORNIA

ISAT
A Division of Tomarco Contractor Specialties
International Seismic Application Technology
14848 Northam Street, La Mirada, CA 90638
877-999-4728 (Toll Free) 714-523-0845 (Fax)
www.isatsb.com

Rev. 0
08/03/2018

RIGID BRACING REQUIREMENTS [7]

3-ROD TRAPEZE MOUNTED PIPING (Plumbing, Mechanical, Process, Medical Gas) — **MAXIMUM SEISMIC DESIGN FORCE = 1.00 G's**

Requires Use of ISAT Seismic Brackets. Use of Any Non-ISAT Bracket Voids Engineering. — *2013 California Building Code Compliant*

Maximum Trapeze Load (lbs/lf)	Max. Vertical Support Spacing (ft.)	Outboard [1] Rod Total Vertical Load (lbs)	Min. [8] Vertical Support Rod Dia. (in.)	OUTBOARD TRANSVERSE BRACING REQUIREMENTS: Max. [2] Brace Spacing (ft.)	Brace [3] Reaction P (lbs)	Min. Brace Assembly E - Pages	Min. Brace Anchorage [6]: Form Pour [4] Deck Page D1	Min. Brace Anchorage [6]: Metal [5] Deck Page D2	OUTBOARD LONGITUDINAL BRACING REQUIREMENTS: Max. [2] Brace Spacing (ft.)	Brace [3] Reaction P (lbs)	Min. Brace Assembly E - Pages	Min. Brace Anchorage [6]: Form Pour [4] Deck Page D1	Min. Brace Anchorage [6]: Metal [5] Deck Page D2
				1-Way Transverse Brace Pattern (B13.0)					5-Way Transverse, Longitudinal Brace Pattern (B13.4)				
11.0	10	623	1/2	40	685	R12AAEM509	N7	L7	80	342	R12AAEM406	N4	L4
25.0	10	1,417	5/8	40	1,556	R58AAEM606	N16	L16	80	778	R58AAEM509	N8	L8
35.0	10	1,984	3/4	40	2,178	R34DGB2P09	N22	L22	80	1,089	R34CFB1P06	N11	L11
50.0	10	2,034	3/4	28	2,178	R34DGB2P09	N22	L22	56	1,089	R34CFB1P06	N11	L11
65.0	10	2,125	3/4	22	2,225	R34DGB2P09	N23	L23	44	1,112	R34CFB1P06	N12	L12
75.0	10	2,052	3/4	18	2,100	R34DGB2P09	N22	L22	36	1,050	R34CFB1P06	N11	L11
100.0	10	2,203	3/4	14	2,178	R34DGB2P09	N22	L22	28	1,089	R34CFB1P06	N11	L11
125.0	10	2,087	3/4	10	1,945	R34DGB2P09	N20	L20	20	972	R34CFB1P06	N10	L10
				OUTBOARD TRANS., LONGITUDINAL BRACING REQUIR.									
				6-Way Transverse, Longitudinal Brace Pattern (B13.5)									
150.0	10	2,405	3/4	19	2,217	R34DGB2P09	N23	L23					
175.0	10	2,456	3/4	16	2,178	R34DGB2P09	N22	L22					
200.0	10	2,540	3/4	14	2,178	R34DGB2P09	N22	L22					
225.0	10	2,708	3/4	13	2,275	R34DGB2P09	N23	L23					

1. TVL = DL + Fv + ($0.2S_{DS}$/1.4 x Wp). All Terms Are Working Loads. Based On Eccentric Loading, 35% Of Total Load Allocated Per Outboard Rod.
2. Reductions In Actual Installed Brace Spacing Will Result In An Equal Percentage Reduction In Brace Reaction. As An Option When This Occurs ISAT May Substitute An Alternate Anchorage From Tables D1 or D2 Which Meets or Exceeds The Lowered Brace Reaction.
3. At Max. 50 Degree Brace Inclination.
4. Min. 3,000 psi NWC. Any "N Series" Connection May Be Utilized Having A Numeric Designation Equal To Or Higher Than That Shown.
5. Min. 3,000 psi NWC or LWC. Any "L Series" Connection May Be Utilized Having A Numeric Designation Equal To Or Higher Than That Shown.
6. As An Alternate, Brace Anchorage Connections To Structure May Be Employed Using Any Detail From Structural Connections Section "D" Series Details Where Assembly Design Value Meets Or Exceeds Brace Reaction.
7. For Trade Specific Bracing Installation Notes, Refer To Page 8.1 or 10.1.
8. Utilize Any "G" Series Vertical Support Connection Having A Design Value Equal To Or Greater Than The Corresponding "Rod Total Vertical Load".

REVIEWED FOR CODE COMPLIANCE
HCAI
OPM-0403
BY: William Staehlin
DATE: 01-26-2024
CALIFORNIA BUILDING CODE, 2022

REGISTERED PROFESSIONAL ENGINEER
MARCIN WASAZNIK
S-6612
STRUCTURAL
STATE OF CALIFORNIA

ISAT
A Division of Tomarco Contractor Specialties
International Seismic Application Technology
14848 Northam Street, La Mirada, CA 90638
877-999-4728 (Toll Free) 714-523-0845 (Fax)
www.isatsb.com

Rev. 0
08/03/2018
Page
C19-1-45
Outboard

RIGID BRACING REQUIREMENTS [7]

3-ROD TRAPEZE MOUNTED PIPING (Plumbing, Mechanical, Process, Medical Gas) — **MAXIMUM SEISMIC DESIGN FORCE = 1.00 G's**

Requires Use of ISAT Seismic Brackets. Use of Any Non-ISAT Bracket Voids Engineering. — *2013 California Building Code Compliant*

Maximum Trapeze Load (lbs/lf)	Max. Vertical Support Spacing (ft.)	Outboard [1] Rod Total Vertical Load (lbs)	Min. [8] Vertical Support Rod Dia. (in.)	OUTBOARD TRANSVERSE BRACING REQUIREMENTS					OUTBOARD LONGITUDINAL BRACING REQUIREMENTS				
				Max. [2] Brace Spacing (ft.)	Brace [3] Reaction P (lbs)	Min. Brace Assembly E - Pages	Min. Brace Anchorage [6] Form Pour [4] Deck Page D1	Min. Brace Anchorage [6] Metal [5] Deck Page D2	Max. [2] Brace Spacing (ft.)	Brace [3] Reaction P (lbs)	Min. Brace Assembly E - Pages	Min. Brace Anchorage [6] Form Pour [4] Deck Page D1	Min. Brace Anchorage [6] Metal [5] Deck Page D2
				1-Way Transverse Brace Pattern (B13.0)					5-Way Transverse, Longitudinal Brace Pattern (B13.4)				
11.0	10	889	1/2	40	880	R12AAEM506	N9	L9	80	440	R12AAEM406	N5	L5
25.0	10	1,440	5/8	28	1,400	R58AAEM506	N14	L14	56	700	R58AAEM509	N7	L7
35.0	10	1,474	5/8	20	1,400	R58AAEM506	N14	L14	40	700	R58AAEM509	N7	L7
50.0	10	1,524	5/8	14	1,400	R58AAEM506	N14	L14	28	700	R58AAEM509	N7	L7
65.0	10	1,478	5/8	10	1,300	R58AAEM506	N13	L13	20	650	R58AAEM406	N7	L7
				OUTBOARD TRANS., LONGITUDINAL BRACING REQUIR.									
				6-Way Transverse, Longitudinal Brace Pattern (B13.5)									
75.0	10	1,633	5/8	19	1,425	R58AAEM506	N15	L15					
100.0	10	1,693	5/8	14	1,400	R58AAEM506	N14	L14					
125.0	10	1,753	5/8	11	1,375	R58AAEM506	N14	L14					
150.0	10	1,813	5/8	9	1,350	R58AAEM506	N14	L14					
175.0	10	1,946	5/8	8	1,400	R58AAEM506	N14	L14					
200.0	10	2,031	5/8	7	1,400	R58AAEM506	N14	L14					
225.0	10	2,067	5/8	6	1,350	R58AAEM506	N14	L14					

1. TVL = DL + Fv + ($0.2S_{DS}$/1.4 x Wp). All Terms Are Working Loads. Based On Eccentric Loading, 35% Of Total Load Allocated Per Outboard Rod.
2. Reductions In Actual Installed Brace Spacing Will Result In An Equal Percentage Reduction In Brace Reaction. As An Option When This Occurs ISAT May Substitute An Alternate Anchorage From Tables D1 or D2 Which Meets or Exceeds The Lowered Brace Reaction.
3. At Max. 60 Degree Brace Inclination.
4. Min. 3,000 psi NWC. Any "N Series" Connection May Be Utilized Having A Numeric Designation Equal To Or Higher Than That Shown.
5. Min. 3,000 psi NWC or LWC. Any "L Series" Connection May Be Utilized Having A Numeric Designation Equal To Or Higher Than That Shown.
6. As An Alternate, Brace Anchorage Connections To Structure May Be Employed Using Any Detail From Structural Connections Section "D" Series Details Where Assembly Design Value Meets Or Exceeds Brace Reaction.
7. For Trade Specific Bracing Installation Notes, Refer To Page 8.1 or 10.1.
8. Utilize Any "G" Series Vertical Support Connection Having A Design Value Equal To Or Greater Than The Corresponding "Rod Total Vertical Load".

REVIEWED FOR CODE COMPLIANCE OPM-0403 BY: William Staehlin DATE: 01-26-2024 CALIFORNIA BUILDING CODE 2022

REGISTERED PROFESSIONAL ENGINEER MARCIN WASAZNIK S-6612 STRUCTURAL STATE OF CALIFORNIA

ISAT
A Division of Tomarco Contractor Specialties
International Seismic Application Technology
14848 Northam Street, La Mirada, CA 90638
877-999-4728 (Toll Free) 714-523-0845 (Fax)
www.isatsb.com

Rev. 0
08/03/2018

CABLE BRACING REQUIREMENTS [7]

3-ROD TRAPEZE MOUNTED PIPING (Plumbing, Mechanical, Process, Medical Gas) — **MAXIMUM SEISMIC DESIGN FORCE = 0.25 G's**

Requires Use of ISAT Seismic Brackets. Use of Any Non-ISAT Bracket Voids Engineering. — *2013 California Building Code Compliant*

Maximum Trapeze Load (lbs/lf)	Max. Vertical Support Spacing (ft.)	Inboard [1, 8] Rod Total Vertical Load (lbs)	Min. [8] Vertical Support Rod Dia. (in.)	INBOARD LONGITUDINAL BRACING REQUIREMENTS				
				Max. [2] Brace Spacing (ft.)	Brace [3] Reaction P (lbs)	Min. Brace Assembly E - Pages	Min. Brace Anchorage [6] Form Pour [4] Deck Page D1	Min. Brace Anchorage [6] Metal [5] Deck Page D2
				8-Way Transverse, Longitudinal Brace Pattern (B17.1)				
11.0	10	126	3/8	80	216	C38AA04WS	N3	L3
25.0	10	287	1/2	80	491	C12AA04WS	N5	L5
35.0	10	402	1/2	80	687	C12AA06WS	N7	L7
50.0	10	574	1/2	80	981	C12AA06WS	N10	L10
65.0	10	746	1/2	80	1,276	C12AA06WS	N13	L13
75.0	10	861	1/2	78	1,435	C12AA06WS	N15	L15
100.0	10	1,148	1/2	59	1,448	C12AA06WS	N15	L15
125.0	10	1,434	1/2	47	1,442	C12AA06WS	N15	L15
150.0	10	1,721	1/2	39	1,435	C12AA06WS	N15	L15
175.0	10	2,008	1/2	33	1,417	C12AA06WS	N15	L15
200.0	10	2,295	1/2	29	1,423	C12AA06WS	N15	L15
225.0	10	2,582	5/8	26	1,435	C58AA06WS	N15	L15

1. TVL = DL + Fv + ($0.2S_{DS}$/1.4 x Wp). All Terms Are Working Loads. Based On Eccentric Loading, 85% Of Total Load Allocated Per Inboard Rod.
2. Reductions In Actual Installed Brace Spacing Will Result In An Equal Percentage Reduction In Brace Reaction. As An Option When This Occurs ISAT May Substitute An Alternate Anchorage From Tables D1 or D2 Which Meets or Exceeds The Lowered Brace Reaction.
3. At Max. 30 Degree Brace Inclination.
4. Min. 3,000 psi NWC. Any "N Series" Connection May Be Utilized Having A Numeric Designation Equal To Or Higher Than That Shown.
5. Min. 3,000 psi NWC or LWC. Any "L Series" Connection May Be Utilized Having A Numeric Designation Equal To Or Higher Than That Shown.
6. As An Alternate, Brace Anchorage Connections To Structure May Be Employed Using Any Detail From Structural Connections Section "D" Series Details Where Assembly Design Value Meets Or Exceeds Brace Reaction.
7. For Trade Specific Bracing Installation Notes, Refer To Page 8.1 or 10.1.
8. Utilize Any "G" Series Vertical Support Connection Having A Design Value Equal To Or Greater Than The Corresponding "Rod Total Vertical Load".

REVIEWED FOR CODE COMPLIANCE
HCAI
OPM-0403
BY: William Staehlin
DATE: 01-26-2024
CALIFORNIA BUILDING CODES

REGISTERED PROFESSIONAL ENGINEER MARCIN WASAZNIK S-6612 STRUCTURAL STATE OF CALIFORNIA

ISAT
A Division of Tomarco Contractor Specialties
International Seismic Application Technology
14848 Northam Street, La Mirada, CA 90638
877-999-4728 (Toll Free) 714-523-0845 (Fax)
www.isatsb.com

Rev. 0
08/03/18
Page
C20-0.25-30
Inboard

CABLE BRACING REQUIREMENTS [7]

3-ROD TRAPEZE MOUNTED PIPING (Plumbing, Mechanical, Process, Medical Gas) — **MAXIMUM SEISMIC DESIGN FORCE = 0.25 G's**

Requires Use of ISAT Seismic Brackets. Use of Any Non-ISAT Bracket Voids Engineering. — *2013 California Building Code Compliant*

Maximum Trapeze Load (lbs/lf)	Max. Vertical Support Spacing (ft.)	Inboard [1, 8] Rod Total Vertical Load (lbs)	Min. [8] Vertical Support Rod Dia. (in.)	INBOARD LONGITUDINAL BRACING REQUIREMENTS				
				Max. [2] Brace Spacing (ft.)	Brace [3] Reaction P (lbs)	Min. Brace Assembly E - Pages	Min. Brace Anchorage [6] Form Pour [4] Deck Page D1	Min. Brace Anchorage [6] Metal [5] Deck Page D2
				8-Way Transverse, Longitudinal Brace Pattern (B17.1)				
11.0	10	126	3/8	80	291	C38AA04WS	N3	L3
25.0	10	287	1/2	80	661	C12AA04WS	N7	L7
35.0	10	402	1/2	80	926	C12AA06WS	N10	L10
50.0	10	574	1/2	80	1,322	C12AA06WS	N14	L14
65.0	10	746	5/8	80	1,719	C58DG06TS	N18	L18
75.0	10	861	5/8	72	1,785	C58DG06TS	N18	L18
100.0	10	1,148	5/8	54	1,785	C58DG06TS	N18	L18
125.0	10	1,434	5/8	44	1,818	C58DG06TS	N19	L19
150.0	10	1,721	5/8	36	1,785	C58DG06TS	N18	L18
175.0	10	2,008	5/8	30	1,736	C58DG06TS	N18	L18
200.0	10	2,295	5/8	26	1,719	C58DG06TS	N18	L18
225.0	10	2,582	5/8	24	1,785	C58DG06TS	N18	L18

1. TVL = DL + Fv + ($0.2S_{DS}$/1.4 x Wp). All Terms Are Working Loads. Based On Eccentric Loading, 85% Of Total Load Allocated Per Inboard Rod.
2. Reductions In Actual Installed Brace Spacing Will Result In An Equal Percentage Reduction In Brace Reaction. As An Option When This Occurs ISAT May Substitute An Alternate Anchorage From Tables D1 or D2 Which Meets or Exceeds The Lowered Brace Reaction.
3. At Max. 50 Degree Brace Inclination.
4. Min. 3,000 psi NWC. Any "N Series" Connection May Be Utilized Having A Numeric Designation Equal To Or Higher Than That Shown.
5. Min. 3,000 psi NWC or LWC. Any "L Series" Connection May Be Utilized Having A Numeric Designation Equal To Or Higher Than That Shown.
6. As An Alternate, Brace Anchorage Connections To Structure May Be Employed Using Any Detail From Structural Connections Section "D" Series Details Where Assembly Design Value Meets Or Exceeds Brace Reaction.
7. For Trade Specific Bracing Installation Notes, Refer To Page 8.1 or 10.1.
8. Utilize Any "G" Series Vertical Support Connection Having A Design Value Equal To Or Greater Than The Corresponding "Rod Total Vertical Load".

REVIEWED FOR CODE COMPLIANCE
HCAI
OPM-0403
BY: William Staehlin
DATE: 01-26-2024
CALIFORNIA BUILDING CODES

REGISTERED PROFESSIONAL ENGINEER
MARCIN WASAZNIK
S-6612
STRUCTURAL
STATE OF CALIFORNIA

ISAT
A Division of Tomarco Contractor Specialties
International Seismic Application Technology
14848 Northam Street, La Mirada, CA 90638
877-999-4728 (Toll Free) 714-523-0845 (Fax)
www.isatsb.com

Rev. 0
08/03/18
Page
C20-0.25-45
Inboard

CABLE BRACING REQUIREMENTS [7]

3-ROD TRAPEZE MOUNTED PIPING (Plumbing, Mechanical, Process, Medical Gas) — **MAXIMUM SEISMIC DESIGN FORCE = 0.25 G's**

Requires Use of ISAT Seismic Brackets. Use of Any Non-ISAT Bracket Voids Engineering. — *2013 California Building Code Compliant*

Maximum Trapeze Load (lbs/lf)	Max. Vertical Support Spacing (ft.)	Inboard [1, 8] Rod Total Vertical Load (lbs)	Min. [8] Vertical Support Rod Dia. (in.)	INBOARD LONGITUDINAL BRACING REQUIREMENTS				
				Max. [2] Brace Spacing (ft)	Brace [3] Reaction P (lbs)	Min. Brace Assembly E-Pages	Min. Brace Anchorage [6] Form Pour [4] Deck Page D1	Min. Brace Anchorage [6] Metal [5] Deck Page D2
				8-Way Transverse, Longitudinal Brace Pattern (B17.1)				
11.0	10	126	3/8	80	374	C38AA04WS	N4	L4
25.0	10	287	1/2	80	850	C12AA06WS	N9	L9
35.0	10	402	5/8	80	1,190	C58AA06WS	N12	L12
50.0	10	574	5/8	69	1,466	C58AA06WS	N15	L15
65.0	10	746	5/8	53	1,464	C58AA06WS	N15	L15
75.0	10	861	5/8	46	1,466	C58AA06WS	N15	L15
100.0	10	1,148	5/8	34	1,445	C58AA06WS	N15	L15
125.0	10	1,434	5/8	27	1,434	C58AA06WS	N15	L15
150.0	10	1,721	5/8	23	1,466	C58AA06WS	N15	L15
175.0	10	2,008	5/8	19	1,413	C58AA06WS	N15	L15
200.0	10	2,295	5/8	17	1,445	C58AA06WS	N15	L15
225.0	10	2,582	5/8	15	1,434	C58AA06WS	N15	L15

1. TVL = DL + Fv + ($0.2S_{DS}$/1.4 x Wp). All Terms Are Working Loads. Based On Eccentric Loading, 85% Of Total Load Allocated Per Inboard Rod.
2. Reductions In Actual Installed Brace Spacing Will Result In An Equal Percentage Reduction In Brace Reaction. As An Option When This Occurs ISAT May Substitute An Alternate Anchorage From Tables D1 or D2 Which Meets or Exceeds The Lowered Brace Reaction.
3. At Max. 60 Degree Brace Inclination.
4. Min. 3,000 psi NWC. Any "N Series" Connection May Be Utilized Having A Numeric Designation Equal To Or Higher Than That Shown.
5. Min. 3,000 psi NWC or LWC. Any "L Series" Connection May Be Utilized Having A Numeric Designation Equal To Or Higher Than That Shown.
6. As An Alternate, Brace Anchorage Connections To Structure May Be Employed Using Any Detail From Structural Connections Section "D" Series Details Where Assembly Design Value Meets Or Exceeds Brace Reaction.
7. For Trade Specific Bracing Installation Notes, Refer To Page 8.1 or 10.1.
8. Utilize Any "G" Series Vertical Support Connection Having A Design Value Equal To Or Greater Than The Corresponding "Rod Total Vertical Load".

REVIEWED FOR CODE COMPLIANCE
HCAI
OPM-0403
BY: William Staehlin
DATE: 01-26-2024
CALIFORNIA BUILDING CODES

REGISTERED PROFESSIONAL ENGINEER
MARCIN WASAZNIK
S-6612
STRUCTURAL
STATE OF CALIFORNIA

ISAT
A Division of Tomarco Contractor Specialties
International Seismic Application Technology
14848 Northam Street, La Mirada, CA 90638
877-999-4728 (Toll Free) 714-523-0845 (Fax)
www.isatsb.com

Rev. 0
08/03/18
Page
C20-0.25-60
Inboard

CABLE BRACING REQUIREMENTS [7]

3-ROD TRAPEZE MOUNTED PIPING (Plumbing, Mechanical, Process, Medical Gas) — **MAXIMUM SEISMIC DESIGN FORCE = 0.50 G's**

Requires Use of ISAT Seismic Brackets. Use of Any Non-ISAT Bracket Voids Engineering. — *2013 California Building Code Compliant*

Maximum Trapeze Load (lbs/lf)	Max. Vertical Support Spacing (ft.)	Inboard [1, 8] Rod Total Vertical Load (lbs)	Min. [8] Vertical Support Rod Dia. (in.)	INBOARD LONGITUDINAL BRACING REQUIREMENTS				
				Max. [2] Brace Spacing (ft.)	Brace [3] Reaction P (lbs)	Min. Brace Assembly E - Pages	Min. Brace Anchorage [6] Form Pour [4] Deck Page D1	Min. Brace Anchorage [6] Metal [5] Deck Page D2
				8-Way Transverse, Longitudinal Brace Pattern (B17.1)				
11.0	10	126	3/8	80	432	C38AA04WS	N5	L5
25.0	10	287	1/2	80	981	C12AA06WS	N10	L10
35.0	10	402	1/2	80	1,374	C12AA06WS	N14	L14
50.0	10	574	1/2	58	1,423	C12AA06WS	N15	L15
65.0	10	746	1/2	44	1,404	C12AA06WS	N15	L15
75.0	10	861	1/2	38	1,399	C12AA06WS	N14	L14
100.0	10	1,148	1/2	28	1,374	C12AA06WS	N14	L14
125.0	10	1,434	1/2	22	1,350	C12AA06WS	N14	L14
150.0	10	1,721	1/2	18	1,325	C12AA06WS	N14	L14
175.0	10	2,008	1/2	16	1,374	C12AA06WS	N14	L14
200.0	10	2,295	1/2	14	1,374	C12AA06WS	N14	L14
225.0	10	2,582	5/8	12	1,325	C58AA06WS	N14	L14

1. TVL = DL + Fv + ($0.2S_{DS}$/1.4 x Wp). All Terms Are Working Loads. Based On Eccentric Loading, 85% Of Total Load Allocated Per Inboard Rod.
2. Reductions In Actual Installed Brace Spacing Will Result In An Equal Percentage Reduction In Brace Reaction. As An Option When This Occurs ISAT May Substitute An Alternate Anchorage From Tables D1 or D2 Which Meets or Exceeds The Lowered Brace Reaction.
3. At Max. 30 Degree Brace Inclination.
4. Min. 3,000 psi NWC. Any "N Series" Connection May Be Utilized Having A Numeric Designation Equal To Or Higher Than That Shown.
5. Min. 3,000 psi NWC or LWC. Any "L Series" Connection May Be Utilized Having A Numeric Designation Equal To Or Higher Than That Shown.
6. As An Alternate, Brace Anchorage Connections To Structure May Be Employed Using Any Detail From Structural Connections Section "D" Series Details Where Assembly Design Value Meets Or Exceeds Brace Reaction.
7. For Trade Specific Bracing Installation Notes, Refer To Page 8.1 or 10.1.
8. Utilize Any "G" Series Vertical Support Connection Having A Design Value Equal To Or Greater Than The Corresponding "Rod Total Vertical Load".

REVIEWED FOR CODE COMPLIANCE
HCAI
OPM-0403
BY: William Staehlin
DATE: 01-26-2024
CALIFORNIA BUILDING CODES

REGISTERED PROFESSIONAL ENGINEER MARCIN WASAZNIK S-6612 STRUCTURAL STATE OF CALIFORNIA

ISAT
A Division of Tomarco Contractor Specialties
International Seismic Application Technology
14848 Northam Street, La Mirada, CA 90638
877-999-4728 (Toll Free) 714-523-0845 (Fax)
www.isatsb.com

Rev. 0
08/03/18
Page
C20-0.5-30
Inboard

CABLE BRACING REQUIREMENTS [7]

3-ROD TRAPEZE MOUNTED PIPING (Plumbing, Mechanical, Process, Medical Gas) — **MAXIMUM SEISMIC DESIGN FORCE = 0.50 G's**

Requires Use of ISAT Seismic Brackets. Use of Any Non-ISAT Bracket Voids Engineering. — *2013 California Building Code Compliant*

Maximum Trapeze Load (lbs/lf)	Max. Vertical Support Spacing (ft.)	Inboard [1, 8] Rod Total Vertical Load (lbs)	Min. [8] Vertical Support Rod Dia. (in.)	INBOARD LONGITUDINAL BRACING REQUIREMENTS: Max. [2] Brace Spacing (ft.)	Brace [3] Reaction P (lbs)	Min. Brace Assembly E - Pages	Min. Brace Anchorage [6]: Form Pour [4] Deck Page D1	Min. Brace Anchorage [6]: Metal [5] Deck Page D2
				8-Way Transverse, Longitudinal Brace Pattern (B17.1)				
11.0	10	126	1/2	80	582	C12AA04WS	N6	L6
25.0	10	287	5/8	80	1,322	C58AA06WS	N14	L14
35.0	10	402	5/8	78	1,805	C58DG06TS	N19	L19
50.0	10	574	5/8	54	1,785	C58DG06TS	N18	L18
65.0	10	746	5/8	42	1,805	C58DG06TS	N19	L19
75.0	10	861	5/8	36	1,785	C58DG06TS	N18	L18
100.0	10	1,148	5/8	26	1,719	C58DG06TS	N18	L18
125.0	10	1,434	5/8	22	1,818	C58DG06TS	N19	L19
150.0	10	1,721	5/8	18	1,785	C58DG06TS	N18	L18
175.0	10	2,008	5/8	14	1,620	C58DG06TS	N17	L17
200.0	10	2,295	5/8	12	1,587	C58DG06TS	N16	L16
225.0	10	2,582	5/8	12	1,785	C58DG06TS	N18	L18

1. TVL = DL + Fv + ($0.2S_{DS}$/1.4 x Wp). All Terms Are Working Loads. Based On Eccentric Loading, 85% Of Total Load Allocated Per Inboard Rod.
2. Reductions In Actual Installed Brace Spacing Will Result In An Equal Percentage Reduction In Brace Reaction. As An Option When This Occurs ISAT May Substitute An Alternate Anchorage From Tables D1 or D2 Which Meets or Exceeds The Lowered Brace Reaction.
3. At Max. 50 Degree Brace Inclination.
4. Min. 3,000 psi NWC. Any "N Series" Connection May Be Utilized Having A Numeric Designation Equal To Or Higher Than That Shown.
5. Min. 3,000 psi NWC or LWC. Any "L Series" Connection May Be Utilized Having A Numeric Designation Equal To Or Higher Than That Shown.
6. As An Alternate, Brace Anchorage Connections To Structure May Be Employed Using Any Detail From Structural Connections Section "D" Series Details Where Assembly Design Value Meets Or Exceeds Brace Reaction.
7. For Trade Specific Bracing Installation Notes, Refer To Page 8.1 or 10.1.
8. Utilize Any "G" Series Vertical Support Connection Having A Design Value Equal To Or Greater Than The Corresponding "Rod Total Vertical Load".

REVIEWED FOR CODE COMPLIANCE
HCAI
OPM-0403
BY: William Staehlin
DATE: 01-26-2024
CALIFORNIA BUILDING CODES

REGISTERED PROFESSIONAL ENGINEER MARCIN WASAZNIK S-6612 STRUCTURAL STATE OF CALIFORNIA

ISAT
A Division of Tomarco Contractor Specialties
International Seismic Application Technology
14848 Northam Street, La Mirada, CA 90638
877-999-4728 (Toll Free) 714-523-0845 (Fax)
www.isatsb.com

Rev. 0
08/03/18
Page
C20-0.5-45
Inboard

CABLE BRACING REQUIREMENTS [7]

3-ROD TRAPEZE MOUNTED PIPING (Plumbing, Mechanical, Process, Medical Gas) — **MAXIMUM SEISMIC DESIGN FORCE = 0.50 G's**

Requires Use of ISAT Seismic Brackets. Use of Any Non-ISAT Bracket Voids Engineering. — *2013 California Building Code Compliant*

Maximum Trapeze Load (lbs/lf)	Max. Vertical Support Spacing (ft.)	Inboard [1, 8] Rod Total Vertical Load (lbs)	Min. [8] Vertical Support Rod Dia. (in.)	INBOARD LONGITUDINAL BRACING REQUIREMENTS				
				Max. [2] Brace Spacing (ft)	Brace [3] Reaction P (lbs)	Min. Brace Assembly E- Pages	Min. Brace Anchorage [6] Form Pour [4] Deck Page D1	Min. Brace Anchorage [6] Metal [5] Deck Page D2
				8-Way Transverse, Longitudinal Brace Pattern (B17.1)				
11.0	10	126	1/2	80	748	C12AA06WS	N8	L8
25.0	10	287	5/8	68	1,445	C58AA06WS	N15	L15
35.0	10	402	5/8	48	1,428	C58AA06WS	N15	L15
50.0	10	574	5/8	34	1,445	C58AA06WS	N15	L15
65.0	10	746	5/8	26	1,437	C58AA06WS	N15	L15
75.0	10	861	5/8	22	1,403	C58AA06WS	N15	L15
100.0	10	1,148	5/8	16	1,360	C58AA06WS	N14	L14
125.0	10	1,434	1/2	12	1,275	C12AA06WS	N13	L13
150.0	10	1,721	1/2	10	1,275	C12AA06WS	N13	L13

1. TVL = DL + Fv + ($0.2S_{DS}$/1.4 x Wp). All Terms Are Working Loads. Based On Eccentric Loading, 85% Of Total Load Allocated Per Inboard Rod.
2. Reductions In Actual Installed Brace Spacing Will Result In An Equal Percentage Reduction In Brace Reaction. As An Option When This Occurs ISAT May Substitute An Alternate Anchorage From Tables D1 or D2 Which Meets or Exceeds The Lowered Brace Reaction.
3. At Max. 60 Degree Brace Inclination.
4. Min. 3,000 psi NWC. Any "N Series" Connection May Be Utilized Having A Numeric Designation Equal To Or Higher Than That Shown.
5. Min. 3,000 psi NWC or LWC. Any "L Series" Connection May Be Utilized Having A Numeric Designation Equal To Or Higher Than That Shown.
6. As An Alternate, Brace Anchorage Connections To Structure May Be Employed Using Any Detail From Structural Connections Section "D" Series Details Where Assembly Design Value Meets Or Exceeds Brace Reaction.
7. For Trade Specific Bracing Installation Notes, Refer To Page 8.1 or 10.1
8. Utilize Any "G" Series Vertical Support Connection Having A Design Value Equal To Or Greater Than The Corresponding "Rod Total Vertical Load".

REVIEWED FOR CODE COMPLIANCE
HCAI
OPM-0403
BY: William Staehlin
DATE: 01/26/2024
CALIFORNIA BUILDING CODE, 2019

REGISTERED PROFESSIONAL ENGINEER
MARCIN WASAZNIK
S-6612
STRUCTURAL
STATE OF CALIFORNIA

ISAT
A Division of Tomarco Contractor Specialties

International Seismic Application Technology
14848 Northam Street, La Mirada, CA 90638
877-999-4728 (Toll Free) 714-523-0845 (Fax)
www.isatsb.com

Rev. 0
08/03/18
Page
C20 -0.5-60
Inboard

CABLE BRACING REQUIREMENTS [7]

3-ROD TRAPEZE MOUNTED PIPING (Plumbing, Mechanical, Process, Medical Gas) — **MAXIMUM SEISMIC DESIGN FORCE = 0.75 G's**

Requires Use of ISAT Seismic Brackets. Use of Any Non-ISAT Bracket Voids Engineering. — *2013 California Building Code Compliant*

Maximum Trapeze Load (lbs/lf)	Max. Vertical Support Spacing (ft.)	Inboard [1, 8] Rod Total Vertical Load (lbs)	Min. [8] Vertical Support Rod Dia. (in.)	INBOARD LONGITUDINAL BRACING REQUIREMENTS				
				Max. [2] Brace Spacing (ft.)	Brace [3] Reaction P (lbs)	Min. Brace Assembly E - Pages	Min. Brace Anchorage [6] Form Pour [4] Deck Page D1	Min. Brace Anchorage [6] Metal [5] Deck Page D2
				8-Way Transverse, Longitudinal Brace Pattern (B17.1)				
11.0	10	126	3/8	80	648	C38AA04WS	N7	L7
25.0	10	287	1/2	78	1,435	C12AA06WS	N15	L15
35.0	10	402	1/2	56	1,443	C12AA06WS	N15	L15
50.0	10	574	1/2	38	1,399	C12AA06WS	N14	L14
65.0	10	746	1/2	30	1,435	C12AA06WS	N15	L15
75.0	10	861	1/2	26	1,435	C12AA06WS	N15	L15
100.0	10	1,148	1/2	18	1,325	C12AA06WS	N14	L14
125.0	10	1,434	1/2	14	1,288	C12AA06WS	N13	L13
150.0	10	1,721	1/2	12	1,325	C12AA06WS	N14	L14
175.0	10	2,008	1/2	10	1,288	C12AA06WS	N13	L13

REVIEWED FOR CODE COMPLIANCE
HCAI
OPM-0403
BY: William Staehlin
DATE: 01-26-2024
CALIFORNIA BUILDING CODE, 2022

1. TVL = DL + Fv + ($0.2S_{DS}$/1.4 x Wp). All Terms Are Working Loads. Based On Eccentric Loading, 85% Of Total Load Allocated Per Inboard Rod.
2. Reductions In Actual Installed Brace Spacing Will Result In An Equal Percentage Reduction In Brace Reaction. As An Option When This Occurs ISAT May Substitute An Alternate Anchorage From Tables D1 or D2 Which Meets or Exceeds The Lowered Brace Reaction.
3. At Max. 30 Degree Brace Inclination.
4. Min. 3,000 psi NWC. Any "N Series" Connection May Be Utilized Having A Numeric Designation Equal To Or Higher Than That Shown.
5. Min. 3,000 psi NWC or LWC. Any "L Series" Connection May Be Utilized Having A Numeric Designation Equal To Or Higher Than That Shown.
6. As An Alternate, Brace Anchorage Connections To Structure May Be Employed Using Any Detail From Structural Connections Section "D" Series Details Where Assembly Design Value Meets Or Exceeds Brace Reaction.
7. For Trade Specific Bracing Installation Notes, Refer To Page 8.1 or 10.1.
8. Utilize Any "G" Series Vertical Support Connection Having A Design Value Equal To Or Greater Than The Corresponding "Rod Total Vertical Load".

REGISTERED PROFESSIONAL ENGINEER — MARCIN WASAZNIK — S 6612 — STRUCTURAL — STATE OF CALIFORNIA

ISAT
A Division of Tomarco Contractor Specialties
International Seismic Application Technology
14848 Northam Street, La Mirada, CA 90638
877-999-4728 (Toll Free) 714-523-0845 (Fax)
www.isatsb.com

Rev. 0
08/03/18
Page
C20 -0.75-30
Inboard

CABLE BRACING REQUIREMENTS [7]

3-ROD TRAPEZE MOUNTED PIPING (Plumbing, Mechanical, Process, Medical Gas) — **MAXIMUM SEISMIC DESIGN FORCE = 0.75 G's**

Requires Use of ISAT Seismic Brackets. Use of Any Non-ISAT Bracket Voids Engineering. — *2013 California Building Code Compliant*

Maximum Trapeze Load (lbs/lf)	Max. Vertical Support Spacing (ft.)	Inboard [1, 8] Rod Total Vertical Load (lbs)	Min. [8] Vertical Support Rod Dia. (in.)	INBOARD LONGITUDINAL BRACING REQUIREMENTS				
				Max. [2] Brace Spacing (ft.)	Brace [3] Reaction P (lbs)	Min. Brace Assembly E - Pages	Min. Brace Anchorage [6] Form Pour [4] Deck Page D1	Min. Brace Anchorage [6] Metal [5] Deck Page D2
				8-Way Transverse, Longitudinal Brace Pattern (B17.1)				
11.0	10	126	1/2	80	873	C12AA06WS	N9	L9
25.0	10	287	5/8	72	1,785	C58DG06TS	N18	L18
35.0	10	402	5/8	52	1,805	C58DG06TS	N19	L19
50.0	10	574	5/8	36	1,785	C58DG06TS	N18	L18
65.0	10	746	5/8	28	1,805	C58DG06TS	N19	L19
75.0	10	861	5/8	24	1,785	C58DG06TS	N18	L18
100.0	10	1,148	5/8	18	1,785	C58DG06TS	N18	L18
125.0	10	1,434	5/8	14	1,736	C58DG06TS	N18	L18
150.0	10	1,721	5/8	12	1,785	C58DG06TS	N18	L18
175.0	10	2,008	5/8	10	1,736	C58DG06TS	N18	L18

REVIEWED FOR CODE COMPLIANCE
HCAI
OPM-0403
BY: William Staehlin
DATE: 01-26-2024
CALIFORNIA BUILDING CODE, 2022

1. TVL = DL + Fv + ($0.2S_{DS}$/1.4 x Wp). All Terms Are Working Loads. Based On Eccentric Loading, 85% Of Total Load Allocated Per Inboard Rod.
2. Reductions In Actual Installed Brace Spacing Will Result In An Equal Percentage Reduction In Brace Reaction. As An Option When This Occurs ISAT May Substitute An Alternate Anchorage From Tables D1 or D2 Which Meets or Exceeds The Lowered Brace Reaction.
3. At Max. 50 Degree Brace Inclination.
4. Min. 3,000 psi NWC. Any "N Series" Connection May Be Utilized Having A Numeric Designation Equal To Or Higher Than That Shown.
5. Min. 3,000 psi NWC or LWC. Any "L Series" Connection May Be Utilized Having A Numeric Designation Equal To Or Higher Than That Shown.
6. As An Alternate, Brace Anchorage Connections To Structure May Be Employed Using Any Detail From Structural Connections Section "D" Series Details Where Assembly Design Value Meets Or Exceeds Brace Reaction.
7. For Trade Specific Bracing Installation Notes, Refer To Page 8.1 or 10.1.
8. Utilize Any "G" Series Vertical Support Connection Having A Design Value Equal To Or Greater Than The Corresponding "Rod Total Vertical Load".

REGISTERED PROFESSIONAL ENGINEER
MARCIN WASAZNIK
S 6612
STRUCTURAL
STATE OF CALIFORNIA

ISAT
A Division of Tomarco Contractor Specialties

International Seismic Application Technology
14848 Northam Street, La Mirada, CA 90638
877-999-4728 (Toll Free) 714-523-0845 (Fax)
www.isatsb.com

Rev. 0
08/03/18
Page
C20-0.75-45
Inboard

CABLE BRACING REQUIREMENTS [7]

3-ROD TRAPEZE MOUNTED PIPING (Plumbing, Mechanical, Process, Medical Gas) — **MAXIMUM SEISMIC DESIGN FORCE = 0.75 G's**

Requires Use of ISAT Seismic Brackets. Use of Any Non-ISAT Bracket Voids Engineering. — *2013 California Building Code Compliant*

Maximum Trapeze Load (lbs/lf)	Max. Vertical Support Spacing (ft.)	Inboard [1, 8] Rod Total Vertical Load (lbs)	Min. [8] Vertical Support Rod Dia. (in.)	INBOARD LONGITUDINAL BRACING REQUIREMENTS				
				Max. [2] Brace Spacing (ft)	Brace [3] Reaction P (lbs)	Min. Brace Assembly E-Pages	Min. Brace Anchorage [6] Form Pour [4] Deck Page D1	Min. Brace Anchorage [6] Metal [5] Deck Page D2
				8-Way Transverse, Longitudinal Brace Pattern (B17.1)				
11.0	10	126	1/2	80	1,122	C12AA06WS	N12	L12
25.0	10	287	5/8	46	1,466	C58AA06WS	N15	L15
35.0	10	402	5/8	32	1,428	C58AA06WS	N15	L15
50.0	10	574	5/8	22	1,403	C58AA06WS	N15	L15
65.0	10	746	5/8	16	1,326	C58AA06WS	N14	L14
75.0	10	861	5/8	14	1,339	C58AA06WS	N14	L14
100.0	10	1,148	5/8	10	1,275	C58AA06WS	N13	L13

1. TVL = DL + Fv + ($0.2S_{DS}$/1.4 x Wp). All Terms Are Working Loads. Based On Eccentric Loading, 85% Of Total Load Allocated Per Inboard Rod.
2. Reductions In Actual Installed Brace Spacing Will Result In An Equal Percentage Reduction In Brace Reaction. As An Option When This Occurs ISAT May Substitute An Alternate Anchorage From Tables D1 or D2 Which Meets or Exceeds The Lowered Brace Reaction.
3. At Max. 60 Degree Brace Inclination.
4. Min. 3,000 psi NWC. Any "N Series" Connection May Be Utilized Having A Numeric Designation Equal To Or Higher Than That Shown.
5. Min. 3,000 psi NWC or LWC. Any "L Series" Connection May Be Utilized Having A Numeric Designation Equal To Or Higher Than That Shown.
6. As An Alternate, Brace Anchorage Connections To Structure May Be Employed Using Any Detail From Structural Connections Section "D" Series Details Where Assembly Design Value Meets Or Exceeds Brace Reaction.
7. For Trade Specific Bracing Installation Notes, Refer To Page 8.1 or 10.1
8. Utilize Any "G" Series Vertical Support Connection Having A Design Value Equal To Or Greater Than The Corresponding "Rod Total Vertical Load".

REVIEWED FOR CODE COMPLIANCE
HCAI
OPM-0403
BY: William Staehlin
DATE: 01-26-2024
CALIFORNIA BUILDING CODE, 2022

REGISTERED PROFESSIONAL ENGINEER
MARCIN WASAZNIK
S-6612
STRUCTURAL
STATE OF CALIFORNIA

ISAT
A Division of Tomarco Contractor Specialties
International Seismic Application Technology
14848 Northam Street, La Mirada, CA 90638
877-999-4728 (Toll Free) 714-523-0845 (Fax)
www.isatsb.com

Rev. 0
08/03/18
Page
C20-0.75-60
Inboard

CABLE BRACING REQUIREMENTS [7]

3-ROD TRAPEZE MOUNTED PIPING (Plumbing, Mechanical, Process, Medical Gas) — **MAXIMUM SEISMIC DESIGN FORCE = 1.00 G's**

Requires Use of ISAT Seismic Brackets. Use of Any Non-ISAT Bracket Voids Engineering. — *2013 California Building Code Compliant*

Maximum Trapeze Load (lbs/lf)	Max. Vertical Support Spacing (ft.)	Inboard [1, 8] Rod Total Vertical Load (lbs)	Min. [8] Vertical Support Rod Dia. (in.)	INBOARD LONGITUDINAL BRACING REQUIREMENTS				
				Max. [2] Brace Spacing (ft.)	Brace [3] Reaction P (lbs)	Min. Brace Assembly E - Pages	Min. Brace Anchorage [6] Form Pour [4] Deck Page D1	Min. Brace Anchorage [6] Metal [5] Deck Page D2
				8-Way Transverse, Longitudinal Brace Pattern (B17.1)				
11.0	10	126	1/2	80	864	C12AA06WS	N9	L9
25.0	10	287	1/2	58	1,423	C12AA06WS	N15	L15
35.0	10	402	1/2	42	1,443	C12AA06WS	N15	L15
50.0	10	574	1/2	28	1,374	C12AA06WS	N14	L14
65.0	10	746	1/2	22	1,404	C12AA06WS	N15	L15
75.0	10	861	1/2	18	1,325	C12AA06WS	N14	L14
100.0	10	1,148	1/2	14	1,374	C12AA06WS	N14	L14
125.0	10	1,434	1/2	10	1,227	C12AA06WS	N13	L13

1. TVL = DL + Fv + ($0.2S_{DS}$/1.4 x Wp). All Terms Are Working Loads. Based On Eccentric Loading, 85% Of Total Load Allocated Per Inboard Rod.
2. Reductions In Actual Installed Brace Spacing Will Result In An Equal Percentage Reduction In Brace Reaction. As An Option When This Occurs ISAT May Substitute An Alternate Anchorage From Tables D1 or D2 Which Meets or Exceeds The Lowered Brace Reaction.
3. At Max. 30 Degree Brace Inclination.
4. Min. 3,000 psi NWC. Any "N Series" Connection May Be Utilized Having A Numeric Designation Equal To Or Higher Than That Shown.
5. Min. 3,000 psi NWC or LWC. Any "L Series" Connection May Be Utilized Having A Numeric Designation Equal To Or Higher Than That Shown.
6. As An Alternate, Brace Anchorage Connections To Structure May Be Employed Using Any Detail From Structural Connections Section "D" Series Details Where Assembly Design Value Meets Or Exceeds Brace Reaction.
7. For Trade Specific Bracing Installation Notes, Refer To Page 8.1 or 10.1.
8. Utilize Any "G" Series Vertical Support Connection Having A Design Value Equal To Or Greater Than The Corresponding "Rod Total Vertical Load".

REVIEWED FOR CODE COMPLIANCE
HCAI
OPM-0403
BY: William Staehlin
DATE: 01/26/2024
CALIFORNIA BUILDING CODE, 2022

REGISTERED PROFESSIONAL ENGINEER
MARCIN WASAZNIK
S-6612
STRUCTURAL
STATE OF CALIFORNIA

ISAT
A Division of Tomarco Contractor Specialties
International Seismic Application Technology
14848 Northam Street, La Mirada, CA 90638
877-999-4728 (Toll Free) 714-523-0845 (Fax)
www.isatsb.com

Rev. 0
08/03/18
Page
C20-1-30
Inboard

CABLE BRACING REQUIREMENTS [7]

3-ROD TRAPEZE MOUNTED PIPING (Plumbing, Mechanical, Process, Medical Gas) — **MAXIMUM SEISMIC DESIGN FORCE = 1.00 G's**

Requires Use of ISAT Seismic Brackets. Use of Any Non-ISAT Bracket Voids Engineering. — *2013 California Building Code Compliant*

Maximum Trapeze Load (lbs/lf)	Max. Vertical Support Spacing (ft.)	Inboard [1, 8] Rod Total Vertical Load (lbs)	Min. [8] Vertical Support Rod Dia. (in.)	INBOARD LONGITUDINAL BRACING REQUIREMENTS				
				Max. [2] Brace Spacing (ft.)	Brace [3] Reaction P (lbs)	Min. Brace Assembly E - Pages	Min. Brace Anchorage [6] Form Pour [4] Deck Page D1	Min. Brace Anchorage [6] Metal [5] Deck Page D2
				8-Way Transverse, Longitudinal Brace Pattern (B17.1)				
11.0	10	126	1/2	80	1,164	C12AA06WS	N12	L12
25.0	10	287	5/8	54	1,785	C58DG06TS	N18	L18
35.0	10	402	5/8	38	1,759	C58DG06TS	N18	L18
50.0	10	574	5/8	26	1,719	C58DG06TS	N18	L18
65.0	10	746	5/8	20	1,719	C58DG06TS	N18	L18
75.0	10	861	5/8	18	1,785	C58DG06TS	N18	L18
100.0	10	1,148	5/8	12	1,587	C58DG06TS	N16	L16
125.0	10	1,434	5/8	10	1,653	C58DG06TS	N17	L17

1. TVL = DL + Fv + ($0.2S_{DS}$/1.4 x Wp). All Terms Are Working Loads. Based On Eccentric Loading, 85% Of Total Load Allocated Per Inboard Rod.
2. Reductions In Actual Installed Brace Spacing Will Result In An Equal Percentage Reduction In Brace Reaction. As An Option When This Occurs ISAT May Substitute An Alternate Anchorage From Tables D1 or D2 Which Meets or Exceeds The Lowered Brace Reaction.
3. At Max. 50 Degree Brace Inclination.
4. Min. 3,000 psi NWC. Any "N Series" Connection May Be Utilized Having A Numeric Designation Equal To Or Higher Than That Shown.
5. Min. 3,000 psi NWC or LWC. Any "L Series" Connection May Be Utilized Having A Numeric Designation Equal To Or Higher Than That Shown.
6. As An Alternate, Brace Anchorage Connections To Structure May Be Employed Using Any Detail From Structural Connections Section "D" Series Details Where Assembly Design Value Meets Or Exceeds Brace Reaction.
7. For Trade Specific Bracing Installation Notes, Refer To Page 8.1 or 10.1
8. Utilize Any "G" Series Vertical Support Connection Having A Design Value Equal To Or Greater Than The Corresponding "Rod Total Vertical Load".

REVIEWED FOR CODE COMPLIANCE
HCAI
OPM-0403
BY: William Staehlin
DATE: 01/26/2024
CALIFORNIA BUILDING CODE, 2022

REGISTERED PROFESSIONAL ENGINEER
MARCIN WASAZNIK
S 6612
STRUCTURAL
STATE OF CALIFORNIA

ISAT
A Division of Tomarco Contractor Specialties
International Seismic Application Technology
14848 Northam Street, La Mirada, CA 90638
877-999-4728 (Toll Free) 714-523-0845 (Fax)
www.isatsb.com

Rev. 0
08/03/18
Page
C20-1-45
Inboard

CABLE BRACING REQUIREMENTS [7]

3-ROD TRAPEZE MOUNTED PIPING (Plumbing, Mechanical, Process, Medical Gas) — **MAXIMUM SEISMIC DESIGN FORCE = 1.00 G's**

Requires Use of ISAT Seismic Brackets. Use of Any Non-ISAT Bracket Voids Engineering. — *2013 California Building Code Compliant*

Maximum Trapeze Load (lbs/lf)	Max. Vertical Support Spacing (ft.)	Inboard [1, 8] Rod Total Vertical Load (lbs)	Min. [8] Vertical Support Rod Dia. (in.)	INBOARD LONGITUDINAL BRACING REQUIREMENTS: Max. [2] Brace Spacing (ft)	Brace [3] Reaction P (lbs)	Min. Brace Assembly E-Pages	Min. Brace Anchorage [6]: Form Pour [4] Deck Page D1	Min. Brace Anchorage [6]: Metal [5] Deck Page D2
				8-Way Transverse, Longitudinal Brace Pattern (B26.1)				
11.0	10	126	5/8	78	1,459	C58AA06WS	N15	L15
25.0	10	287	5/8	34	1,445	C58AA06WS	N15	L15
35.0	10	402	5/8	24	1,428	C58AA06WS	N15	L15
50.0	10	574	5/8	16	1,360	C58AA06WS	N14	L14
65.0	10	746	5/8	12	1,326	C58AA06WS	N14	L14
75.0	10	861	5/8	10	1,275	C58AA06WS	N13	L13

1. TVL = DL + Fv + ($0.2S_{DS}$/1.4 x Wp). All Terms Are Working Loads. Based On Eccentric Loading, 85% Of Total Load Allocated Per Inboard Rod.
2. Reductions In Actual Installed Brace Spacing Will Result In An Equal Percentage Reduction In Brace Reaction. As An Option When This Occurs ISAT May Substitute An Alternate Anchorage From Tables D1 or D2 Which Meets or Exceeds The Lowered Brace Reaction.
3. At Max. 60 Degree Brace Inclination.
4. Min. 3,000 psi NWC. Any "N Series" Connection May Be Utilized Having A Numeric Designation Equal To Or Higher Than That Shown.
5. Min. 3,000 psi NWC or LWC. Any "L Series" Connection May Be Utilized Having A Numeric Designation Equal To Or Higher Than That Shown.
6. As An Alternate, Brace Anchorage Connections To Structure May Be Employed Using Any Detail From Structural Connections Section "D" Series Details Where Assembly Design Value Meets Or Exceeds Brace Reaction.
7. For Trade Specific Bracing Installation Notes, Refer To Page 8.1 or 10.1.
8. Utilize Any "G" Series Vertical Support Connection Having A Design Value Equal To Or Greater Than The Corresponding "Rod Total Vertical Load".

REVIEWED FOR CODE COMPLIANCE
OPM-0403
BY: William Staehlin
DATE: 01-26-2024
CALIFORNIA BUILDING CODE, 2022

REGISTERED PROFESSIONAL ENGINEER MARCIN WASAZNIK S-6612 STRUCTURAL STATE OF CALIFORNIA

ISAT
A Division of Tomarco Contractor Specialties
International Seismic Application Technology
14848 Northam Street, La Mirada, CA 90638
877-999-4728 (Toll Free) 714-523-0845 (Fax)
www.isatsb.com

Rev. 0
08/03/18
Page
C20-1-60
Inboard

CABLE BRACING REQUIREMENTS [7]

3-ROD TRAPEZE MOUNTED PIPING (Plumbing, Mechanical, Process, Medical Gas) — **MAXIMUM SEISMIC DESIGN FORCE = 0.25 G's**

Requires Use of ISAT Seismic Brackets. Use of Any Non-ISAT Bracket Voids Engineering. — *2013 California Building Code Compliant*

Maximum Trapeze Load (lbs/lf)	Max. Vertical Support Spacing (ft.)	Outboard [1] Rod Total Vertical Load (lbs)	Min. [8] Vertical Support Rod Dia. (in.)	OUTBOARD TRANSVERSE BRACING REQUIREMENTS					OUTBOARD LONGITUDINAL BRACING REQUIREMENTS				
				Max. [2] Brace Spacing (ft.)	Brace [3] Reaction P (lbs)	Min. Brace Assembly E - Pages	Min. Brace Anchorage [6] Form Pour [4] Deck Page D1	Min. Brace Anchorage [6] Metal [5] Deck Page D2	Max. [2] Brace Spacing (ft.)	Brace [3] Reaction P (lbs)	Min. Brace Assembly E - Pages	Min. Brace Anchorage [6] Form Pour [4] Deck Page D1	Min. Brace Anchorage [6] Metal [5] Deck Page D2
				2-Way Transverse Brace Pattern (B17.0)					8-Way Transverse, Longitudinal Brace Pattern (B17.1)				
11	10	37	3/8	40	127	C38AA04WS	N2	L2	80	64	C38AA04WS	N1	L1
25	10	84	1/2	40	289	C12AA04WS	N3	L3	80	144	C12AA04WS	N2	L2
35	10	118	1/2	40	404	C12AA04WS	N5	L5	80	202	C12AA04WS	N3	L3
50	10	169	1/2	40	577	C12AA04WS	N6	L6	80	289	C12AA04WS	N3	L3
65	10	219	1/2	40	751	C12AA06WS	N8	L8	80	375	C12AA04WS	N4	L4
75	10	253	1/2	40	866	C12AA06WS	N9	L9	80	433	C12AA04WS	N5	L5
100	10	338	1/2	40	1,155	C12AA06WS	N12	L12	80	577	C12AA04WS	N6	L6
125	10	422	1/2	40	1,443	C12AA06WS	N15	L15	80	722	C12AA06WS	N8	L8
				8-Way Transverse, Longitudinal Brace Pattern (B17.1)									
150	10	506	1/2	33	1,429	C12AA06WS	N15	L15					
175	10	591	1/2	28	1,415	C12AA06WS	N15	L15					
200	10	675	1/2	25	1,443	C12AA06WS	N15	L15					
225	10	759	1/2	22	1,429	C12AA06WS	N15	L15					

1. TVL = DL + Fv + ($0.2S_{DS}$/1.4 x Wp). All Terms Are Working Loads. Based On Eccentric Loading, 35% Of Total Load Allocated Per Outboard Rod.
2. Reductions In Actual Installed Brace Spacing Will Result In An Equal Percentage Reduction In Brace Reaction. As An Option When This Occurs ISAT May Substitute An Alternate Anchorage From Tables D1 or D2 Which Meets or Exceeds The Lowered Brace Reaction.
3. At Max. 30 Degree Brace Inclination.
4. Min. 3,000 psi NWC. Any "N Series" Connection May Be Utilized Having A Numeric Designation Equal To Or Higher Than That Shown.
5. Min. 3,000 psi NWC or LWC. Any "L Series" Connection May Be Utilized Having A Numeric Designation Equal To Or Higher Than That Shown.
6. As An Alternate, Brace Anchorage Connections To Structure May Be Employed Using Any Detail From Structural Connections Section "D" Series Details Where Assembly Design Value Meets Or Exceeds Brace Reaction.
7. For Trade Specific Bracing Installation Notes, Refer To Page 8.1 or 10.1.
8. Utilize Any "G" Series Vertical Support Connection Having A Design Value Equal To Or Greater Than The Corresponding "Rod Total Vertical Load".

REVIEWED FOR CODE COMPLIANCE BY: William Staehlin DATE: 01-26-2024 CALIFORNIA BUILDING CODE

REGISTERED PROFESSIONAL ENGINEER NARCIN WASAZNIK S-6612 STRUCTURAL STATE OF CALIFORNIA

ISAT
A Division of Tomarco Contractor Specialties
International Seismic Application Technology
14848 Northam Street, La Mirada, CA 90638
877-999-4728 (Toll Free) 714-523-0845 (Fax)
www.isatsb.com

Rev. 0
8/03/2018
Page
C20-0.25-30
Outboard

CABLE BRACING REQUIREMENTS [7]

3-ROD TRAPEZE MOUNTED PIPING (Plumbing, Mechanical, Process, Medical Gas) — **MAXIMUM SEISMIC DESIGN FORCE = 0.25 G's**

Requires Use of ISAT Seismic Brackets. Use of Any Non-ISAT Bracket Voids Engineering. — *2013 California Building Code Compliant*

Maximum Trapeze Load (lbs/lf)	Max. Vertical Support Spacing (ft.)	Outboard [1] Rod Total Vertical Load (lbs)	Min. [8] Vertical Support Rod Dia. (in.)	OUTBOARD TRANSVERSE BRACING REQUIREMENTS					OUTBOARD LONGITUDINAL BRACING REQUIREMENTS				
				Max. [2] Brace Spacing (ft.)	Brace [3] Reaction P (lbs)	Min. Brace Assembly E - Pages	Min. Brace Anchorage [6] Form Pour [4] Deck Page D1	Min. Brace Anchorage [6] Metal [5] Deck Page D2	Max. [2] Brace Spacing (ft.)	Brace [3] Reaction P (lbs)	Min. Brace Assembly E - Pages	Min. Brace Anchorage [6] Form Pour [4] Deck Page D1	Min. Brace Anchorage [6] Metal [5] Deck Page D2
				2-Way Transverse Brace Pattern (B17.0)					8-Way Transverse, Longitudinal Brace Pattern (B17.1)				
11	10	37	3/8	40	171	C38AA04WS	N2	L2	80	86	C38AA04WS	N1	L1
25	10	84	1/2	40	389	C12AA04WS	N4	L4	80	194	C12AA04WS	N2	L2
35	10	118	1/2	40	545	C12AA04WS	N6	L6	80	272	C12AA04WS	N3	L3
50	10	169	1/2	40	778	C12AA06WS	N8	L8	80	389	C12AA04WS	N4	L4
65	10	219	1/2	40	1,011	C12AA06WS	N11	L11	80	506	C12AA04WS	N6	L6
75	10	253	1/2	40	1,167	C12AA06WS	N12	L12	80	583	C12AA04WS	N6	L6
100	10	338	5/8	40	1,556	C58DG06TS	N16	L16	80	778	C58AA06WS	N8	L8
125	10	422	5/8	34	1,653	C58DG06TS	N17	L17	68	826	C58AA06WC	N9	L9
				8-Way Transverse, Longitudinal Brace Pattern (B17.1)									
150	10	506	5/8	30	1,750	C58DG06TS	N18	L18					
175	10	591	5/8	26	1,770	C58DG06TS	N18	L18					
200	10	675	5/8	23	1,789	C58DG06TS	N18	L18					
225	10	759	5/8	20	1,750	C58DG06TS	N18	L18					

1. TVL = DL + Fv + ($0.2S_{DS}$/1.4 x Wp). All Terms Are Working Loads. Based On Eccentric Loading, 35% Of Total Load Allocated Per Outboard Rod.
2. Reductions In Actual Installed Brace Spacing Will Result In An Equal Percentage Reduction In Brace Reaction. As An Option When This Occurs ISAT May Substitute An Alternate Anchorage From Tables D1 or D2 Which Meets or Exceeds The Lowered Brace Reaction.
3. At Max. 50 Degree Brace Inclination.
4. Min. 3,000 psi NWC. Any "N Series" Connection May Be Utilized Having A Numeric Designation Equal To Or Higher Than That Shown.
5. Min. 3,000 psi NWC or LWC. Any "L Series" Connection May Be Utilized Having A Numeric Designation Equal To Or Higher Than That Shown.
6. As An Alternate, Brace Anchorage Connections To Structure May Be Employed Using Any Detail From Structural Connections Section "D" Series Details Where Assembly Design Value Meets Or Exceeds Brace Reaction.
7. For Trade Specific Bracing Installation Notes, Refer To Page 8.1 or 10.1.
8. Utilize Any "G" Series Vertical Support Connection Having A Design Value Equal To Or Greater Than The Corresponding "Rod Total Vertical Load".

REVIEWED FOR CODE COMPLIANCE BY William Staehlin DATE: 01-26-2024 OPM-0403 CALIFORNIA BUILDING CODE 2022

REGISTERED PROFESSIONAL ENGINEER MARCIN WASAZNIK S-6612 STRUCTURAL STATE OF CALIFORNIA

ISAT
A Division of Tomarco Contractor Specialties
International Seismic Application Technology
14848 Northam Street, La Mirada, CA 90638
877-999-4728 (Toll Free) 714-523-0845 (Fax)
www.isatsb.com

Rev. 0
8/03/2018
Page
C20-0.25-45
Outboard

CABLE BRACING REQUIREMENTS [7]

3-ROD TRAPEZE MOUNTED PIPING (Plumbing, Mechanical, Process, Medical Gas) — **MAXIMUM SEISMIC DESIGN FORCE = 0.25 G's**

Requires Use of ISAT Seismic Brackets. Use of Any Non-ISAT Bracket Voids Engineering. — *2013 California Building Code Compliant*

Maximum Trapeze Load (lbs/lf)	Max. Vertical Support Spacing (ft.)	Outboard [1] Rod Total Vertical Load (lbs)	Min. [8] Vertical Support Rod Dia. (in.)	OUTBOARD TRANSVERSE BRACING REQUIREMENTS					OUTBOARD LONGITUDINAL BRACING REQUIREMENTS				
				Max. [2] Brace Spacing (ft.)	Brace [3] Reaction P (lbs)	Min. Brace Assembly E- Pages	Min. Brace Anchorage [6] Form Pour [4] Deck Page D1	Min. Brace Anchorage [6] Metal [5] Deck Page D2	Max. [2] Brace Spacing (ft.)	Brace [3] Reaction P (lbs)	Min. Brace Assembly E- Pages	Min. Brace Anchorage [6] Form Pour [4] Deck Page D1	Min. Brace Anchorage [6] Metal [5] Deck Page D2
				2-Way Transverse Brace Pattern (B17.0)					8-Way Transverse, Longitudinal Brace Pattern (B17.1)				
11	10	37	3/8	40	220	C38AA04WS	N3	L3	80	110	C38AA04WS	N2	L2
25	10	84	1/2	40	500	C12AA04WS	N5	L5	80	250	C12AA04WS	N3	L3
35	10	118	1/2	40	700	C12AA06WS	N7	L7	80	350	C12AA04WS	N4	L4
50	10	169	1/2	40	1,000	C12AA06WS	N10	L10	80	500	C12AA04WS	N5	L5
65	10	219	5/8	40	1,300	C58AA06WS	N13	L13	80	650	C58AA04WS	N7	L7
75	10	253	3/4	39	1,463	C34DG06WS	N15	L15	78	731	C34DG06WS	N8	L8
100	10	338	5/8	29	1,450	C58AA06WS	N15	L15	58	725	C58AA06WS	N8	L8
125	10	422	5/8	23	1,438	C58AA06WS	N15	L15	46	719	C58AA06WS	N8	L8
				8-Way Transverse, Longitudinal Brace Pattern (B17.1)									
150	10	506	5/8	19	1,425	C58AA06WS	N15	L15					
175	10	591	5/8	16	1,400	C58AA06WS	N14	L14					
200	10	675	5/8	14	1,400	C58AA06WS	N14	L14					
225	10	759	5/8	13	1,463	C58AA06WS	N15	L15					

1. TVL = DL + Fv + ($0.2S_{DS}$/1.4 x Wp). All Terms Are Working Loads. Based On Eccentric Loading, 35% Of Total Load Allocated Per Outboard Rod.
2. Reductions In Actual Installed Brace Spacing Will Result In An Equal Percentage Reduction In Brace Reaction. As An Option When This Occurs ISAT May Substitute An Alternate Anchorage From Tables D1 or D2 Which Meets or Exceeds The Lowered Brace Reaction.
3. At Max. 60 Degree Brace Inclination.
4. Min. 3,000 psi NWC. Any "N Series" Connection May Be Utilized Having A Numeric Designation Equal To Or Higher Than That Shown.
5. Min. 3,000 psi NWC or LWC. Any "L Series" Connection May Be Utilized Having A Numeric Designation Equal To Or Higher Than That Shown.
6. As An Alternate, Brace Anchorage Connections To Structure May Be Employed Using Any Detail From Structural Connections Section "D" Series Details Where Assembly Design Value Meets Or Exceeds Brace Reaction.
7. For Trade Specific Bracing Installation Notes, Refer To Page 8.1 or 10.1.
8. Utilize Any "G" Series Vertical Support Connection Having A Design Value Equal To Or Greater Than The Corresponding "Rod Total Vertical Load".

REVIEWED FOR CODE COMPLIANCE BY: William Staehlin DATE: 01-26-2024 CALIFORNIA BUILDING CODE 2013

REGISTERED PROFESSIONAL ENGINEER MARCIN WASAZNIK S-6612 STRUCTURAL STATE OF CALIFORNIA

ISAT
A Division of Tomarco Contractor Specialties
International Seismic Application Technology
14848 Northam Street, La Mirada, CA 90638
877-999-4728 (Toll Free) 714-523-0845 (Fax)
www.isatsb.com

Rev. 1
03/12/19
Page
C20-0.25-60
Outboard

CABLE BRACING REQUIREMENTS [7]

3-ROD TRAPEZE MOUNTED PIPING (Plumbing, Mechanical, Process, Medical Gas) — **MAXIMUM SEISMIC DESIGN FORCE = 0.50 G's**

Requires Use of ISAT Seismic Brackets. Use of Any Non-ISAT Bracket Voids Engineering. — *2013 California Building Code Compliant*

Maximum Trapeze Load (lbs/lf)	Max. Vertical Support Spacing (ft.)	Outboard [1] Rod Total Vertical Load (lbs)	Min. [8] Vertical Support Rod Dia. (in.)	OUTBOARD TRANSVERSE BRACING REQUIREMENTS					OUTBOARD LONGITUDINAL BRACING REQUIREMENTS				
				Max. [2] Brace Spacing (ft.)	Brace [3] Reaction P (lbs)	Min. Brace Assembly E - Pages	Min. Brace Anchorage [6] Form Pour [4] Deck Page D1	Min. Brace Anchorage [6] Metal [5] Deck Page D2	Max. [2] Brace Spacing (ft.)	Brace [3] Reaction P (lbs)	Min. Brace Assembly E - Pages	Min. Brace Anchorage [6] Form Pour [4] Deck Page D1	Min. Brace Anchorage [6] Metal [5] Deck Page D2
				2-Way Transverse Brace Pattern (B17.0)					8-Way Transverse, Longitudinal Brace Pattern (B17.1)				
11	10	37	3/8	40	254	C38AA04WS	N3	L3	80	127	C38AA04WS	N2	L2
25	10	84	1/2	40	577	C12AA04WS	N6	L6	80	289	C12AA04WS	N3	L3
35	10	118	1/2	40	808	C12AA06WS	N9	L9	80	404	C12AA04WS	N5	L5
50	10	169	1/2	40	1,155	C12AA06WS	N12	L12	80	577	C12AA04WS	N6	L6
65	10	219	1/2	38	1,426	C12AA06WS	N15	L15	76	713	C12AA06WS	N8	L8
75	10	253	1/2	32	1,386	C12AA06WS	N14	L14	64	693	C12AA06WS	N7	L7
100	10	338	1/2	24	1,386	C12AA06WS	N14	L14	48	693	C12AA06WS	N7	L7
125	10	422	1/2	20	1,443	C12AA06WS	N15	L15	40	722	C12AA06WS	N8	L8
				8-Way Transverse, Longitudinal Brace Pattern (B17.1)									
150	10	506	1/2	16	1,386	C12AA06WS	N14	L14					
175	10	591	1/2	14	1,415	C12AA06WS	N15	L15					
200	10	675	1/2	12	1,386	C12AA06WS	N14	L14					
225	10	759	1/2	11	1,429	C12AA06WS	N15	L15					

1. TVL = DL + Fv + ($0.2S_{DS}$/1.4 x Wp). All Terms Are Working Loads. Based On Eccentric Loading, 35% Of Total Load Allocated Per Outboard Rod.
2. Reductions In Actual Installed Brace Spacing Will Result In An Equal Percentage Reduction In Brace Reaction. As An Option When This Occurs ISAT May Substitute An Alternate Anchorage From Tables D1 or D2 Which Meets or Exceeds The Lowered Brace Reaction.
3. At Max. 30 Degree Brace Inclination.
4. Min. 3,000 psi NWC. Any "N Series" Connection May Be Utilized Having A Numeric Designation Equal To Or Higher Than That Shown.
5. Min. 3,000 psi NWC or LWC. Any "L Series" Connection May Be Utilized Having A Numeric Designation Equal To Or Higher Than That Shown.
6. As An Alternate, Brace Anchorage Connections To Structure May Be Employed Using Any Detail From Structural Connections Section "D" Series Details Where Assembly Design Value Meets Or Exceeds Brace Reaction.
7. For Trade Specific Bracing Installation Notes, Refer To Page 8.1 or 10.1.
8. Utilize Any "G" Series Vertical Support Connection Having A Design Value Equal To Or Greater Than The Corresponding "Rod Total Vertical Load".

REVIEWED FOR CODE COMPLIANCE BY: William Staehlin DATE: 01-26-2024 CALIFORNIA BUILDING CODE 2013

REGISTERED PROFESSIONAL ENGINEER MARCIN WASAZNIK S 6612 STRUCTURAL STATE OF CALIFORNIA

ISAT
A Division of Tomarco Contractor Specialties
International Seismic Application Technology
14848 Northam Street, La Mirada, CA 90638
877-999-4728 (Toll Free) 714-523-0845 (Fax)
www.isatsb.com

Rev. 0
8/03/2018
Page
C20-0.5-30
Outboard

CABLE BRACING REQUIREMENTS [7]

3-ROD TRAPEZE MOUNTED PIPING (Plumbing, Mechanical, Process, Medical Gas) — **MAXIMUM SEISMIC DESIGN FORCE = 0.50 G's**

Requires Use of ISAT Seismic Brackets. Use of Any Non-ISAT Bracket Voids Engineering. — *2013 California Building Code Compliant*

Maximum Trapeze Load (lbs/lf)	Max. Vertical Support Spacing (ft.)	Outboard [1] Rod Total Vertical Load (lbs)	Min. [8] Vertical Support Rod Dia. (in.)	OUTBOARD TRANSVERSE BRACING REQUIREMENTS					OUTBOARD LONGITUDINAL BRACING REQUIREMENTS				
				Max. [2] Brace Spacing (ft.)	Brace [3] Reaction P (lbs)	Min. Brace Assembly E - Pages	Min. Brace Anchorage [6] Form Pour [4] Deck Page D1	Min. Brace Anchorage [6] Metal [5] Deck Page D2	Max. [2] Brace Spacing (ft.)	Brace [3] Reaction P (lbs)	Min. Brace Assembly E - Pages	Min. Brace Anchorage [6] Form Pour [4] Deck Page D1	Min. Brace Anchorage [6] Metal [5] Deck Page D2
				2-Way Transverse Brace Pattern (B17.0)					8-Way Transverse, Longitudinal Brace Pattern (B17.1)				
11	10	37	3/8	40	342	C38AA04WS	N4	L4	80	171	C38AA04WS	N2	L2
25	10	84	1/2	40	778	C12AA06WS	N8	L8	80	389	C12AA04WS	N4	L4
35	10	118	1/2	40	1,089	C12AA06WS	N11	L11	80	545	C12AA04WS	N6	L6
50	10	169	5/8	40	1,556	C58DG06TS	N16	L16	80	778	C58AA06WS	N8	L8
65	10	219	5/8	32	1,618	C58DG06TS	N17	L17	64	809	C58AA06WS	N9	L9
75	10	253	5/8	28	1,634	C58DG06TS	N17	L17	56	817	C58AA06WS	N9	L9
100	10	338	5/8	20	1,556	C58DG06TS	N16	L16	40	778	C58AA06WS	N8	L8
125	10	422	5/8	16	1,556	C58DG06TS	N16	L16	32	778	C58AA06WC	N8	L8
				8-Way Transverse, Longitudinal Brace Pattern (B17.1)									
150	10	506	5/8	15	1,750	C58DG06TS	N18	L18					
175	10	591	5/8	13	1,770	C58DG06TS	N18	L18					
200	10	675	5/8	11	1,711	C58DG06TS	N18	L18					
225	10	759	5/8	10	1,750	C58DG06TS	N18	L18					

1. TVL = DL + Fv + ($0.2S_{DS}$/1.4 x Wp). All Terms Are Working Loads. Based On Eccentric Loading, 35% Of Total Load Allocated Per Outboard Rod.
2. Reductions In Actual Installed Brace Spacing Will Result In An Equal Percentage Reduction In Brace Reaction. As An Option When This Occurs ISAT May Substitute An Alternate Anchorage From Tables D1 or D2 Which Meets or Exceeds The Lowered Brace Reaction.
3. At Max. 50 Degree Brace Inclination.
4. Min. 3,000 psi NWC. Any "N Series" Connection May Be Utilized Having A Numeric Designation Equal To Or Higher Than That Shown.
5. Min. 3,000 psi NWC or LWC. Any "L Series" Connection May Be Utilized Having A Numeric Designation Equal To Or Higher Than That Shown.
6. As An Alternate, Brace Anchorage Connections To Structure May Be Employed Using Any Detail From Structural Connections Section "D" Series Details Where Assembly Design Value Meets Or Exceeds Brace Reaction.
7. For Trade Specific Bracing Installation Notes, Refer To Page 8.1 or 10.1.
8. Utilize Any "G" Series Vertical Support Connection Having A Design Value Equal To Or Greater Than The Corresponding "Rod Total Vertical Load".

REVIEWED FOR CODE COMPLIANCE
OPM-0403
BY William Staehlin
DATE: 01-26-2024
CALIFORNIA BUILDING CODE 2022

REGISTERED PROFESSIONAL ENGINEER MARCIN WASAZNIK S 6612 STRUCTURAL STATE OF CALIFORNIA

ISAT
A Division of Tomarco Contractor Specialties
International Seismic Application Technology
14848 Northam Street, La Mirada, CA 90638
877-999-4728 (Toll Free) 714-523-0845 (Fax)
www.isatsb.com

Rev. 0
8/03/2018
Page
C20-0.5-45
Outboard

CABLE BRACING REQUIREMENTS [7]

3-ROD TRAPEZE MOUNTED PIPING (Plumbing, Mechanical, Process, Medical Gas) — **MAXIMUM SEISMIC DESIGN FORCE = 0.50 G's**

Requires Use of ISAT Seismic Brackets. Use of Any Non-ISAT Bracket Voids Engineering. — *2013 California Building Code Compliant*

Maximum Trapeze Load (lbs/lf)	Max. Vertical Support Spacing (ft.)	Outboard [1] Rod Total Vertical Load (lbs)	Min. [8] Vertical Support Rod Dia. (in.)	OUTBOARD TRANSVERSE BRACING REQUIREMENTS					OUTBOARD LONGITUDINAL BRACING REQUIREMENTS				
				Max. [2] Brace Spacing (ft.)	Brace [3] Reaction P (lbs)	Min. Brace Assembly E- Pages	Min. Brace Anchorage [6] Form Pour [4] Deck Page D1	Min. Brace Anchorage [6] Metal [5] Deck Page D2	Max. [2] Brace Spacing (ft.)	Brace [3] Reaction P (lbs)	Min. Brace Assembly E- Pages	Min. Brace Anchorage [6] Form Pour [4] Deck Page D1	Min. Brace Anchorage [6] Metal [5] Deck Page D2
				2-Way Transverse Brace Pattern (B17.0)					8-Way Transverse, Longitudinal Brace Pattern (B17.1)				
11	10	37	1/2	40	440	C12AA04WS	N5	L5	80	220	C12AA04WS	N3	L3
25	10	84	1/2	40	1,000	C12AA06WS	N10	L10	80	500	C12AA04WS	N5	L5
35	10	118	5/8	40	1,400	C58AA06WS	N14	L14	80	700	C58AA06WS	N7	L7
50	10	169	3/4	29	1,450	C34DG06WS	N15	L15	58	725	C34DG06WS	N8	L8
65	10	219	5/8	22	1,430	C58AA06WS	N15	L15	44	715	C58AA06WS	N8	L8
75	10	253	5/8	19	1,425	C58AA06WS	N15	L15	38	713	C58AA06WS	N8	L8
100	10	338	5/8	14	1,400	C58AA06WS	N14	L14	28	700	C58AA06WS	N7	L7
125	10	422	5/8	11	1,375	C58AA06WS	N14	L14	22	688	C58AA06WS	N7	L7
				8-Way Transverse, Longitudinal Brace Pattern (B17.1)									
150	10	506	5/8	9	1,350	C58AA06WS	N14	L14					
175	10	591	5/8	8	1,400	C58AA06WS	N14	L14					
200	10	675	5/8	7	1,400	C58AA06WS	N14	L14					
225	10	759	5/8	6	1,350	C58AA06WS	N14	L14					

1. TVL = DL + Fv + ($0.2S_{DS}$/1.4 x Wp). All Terms Are Working Loads. Based On Eccentric Loading, 35% Of Total Load Allocated Per Outboard Rod.
2. Reductions In Actual Installed Brace Spacing Will Result In An Equal Percentage Reduction In Brace Reaction. As An Option When This Occurs ISAT May Substitute An Alternate Anchorage From Tables D1 or D2 Which Meets or Exceeds The Lowered Brace Reaction.
3. At Max. 60 Degree Brace Inclination.
4. Min. 3,000 psi NWC. Any "N Series" Connection May Be Utilized Having A Numeric Designation Equal To Or Higher Than That Shown.
5. Min. 3,000 psi NWC or LWC. Any "L Series" Connection May Be Utilized Having A Numeric Designation Equal To Or Higher Than That Shown.
6. As An Alternate, Brace Anchorage Connections To Structure May Be Employed Using Any Detail From Structural Connections Section "D" Series Details Where Assembly Design Value Meets Or Exceeds Brace Reaction.
7. For Trade Specific Bracing Installation Notes, Refer To Page 8.1 or 10.1.
8. Utilize Any "G" Series Vertical Support Connection Having A Design Value Equal To Or Greater Than The Corresponding "Rod Total Vertical Load".

REVIEWED FOR CODE COMPLIANCE BY: William Staehlin DATE: 01-26-2024 CALIFORNIA BUILDING CODE 2013

REGISTERED PROFESSIONAL ENGINEER MARCIN WASAZNIK S-6612 STRUCTURAL STATE OF CALIFORNIA

ISAT
A Division of Tomarco Contractor Specialties
International Seismic Application Technology
14848 Northam Street, La Mirada, CA 90638
877-999-4728 (Toll Free) 714-523-0845 (Fax)
www.isatsb.com

Rev. 1
03/12/19
Page
C20-0.5-60
Outboard

CABLE BRACING REQUIREMENTS [7]

3-ROD TRAPEZE MOUNTED PIPING (Plumbing, Mechanical, Process, Medical Gas) — **MAXIMUM SEISMIC DESIGN FORCE = 0.75 G's**

Requires Use of ISAT Seismic Brackets. Use of Any Non-ISAT Bracket Voids Engineering. — *2013 California Building Code Compliant*

Maximum Trapeze Load (lbs/lf)	Max. Vertical Support Spacing (ft.)	Outboard [1] Rod Total Vertical Load (lbs)	Min. [8] Vertical Support Rod Dia. (in.)	OUTBOARD TRANSVERSE BRACING REQUIREMENTS					OUTBOARD LONGITUDINAL BRACING REQUIREMENTS				
				Max. [2] Brace Spacing (ft.)	Brace [3] Reaction P (lbs)	Min. Brace Assembly E - Pages	Min. Brace Anchorage [6] Form Pour [4] Deck Page D1	Min. Brace Anchorage [6] Metal [5] Deck Page D2	Max. [2] Brace Spacing (ft.)	Brace [3] Reaction P (lbs)	Min. Brace Assembly E - Pages	Min. Brace Anchorage [6] Form Pour [4] Deck Page D1	Min. Brace Anchorage [6] Metal [5] Deck Page D2
				2-Way Transverse Brace Pattern (B17.0)					8-Way Transverse, Longitudinal Brace Pattern (B17.1)				
11	10	37	3/8	40	381	C38AA04WS	N4	L4	80	191	C38AA04WS	N2	L2
25	10	84	1/2	40	866	C12AA06WS	N9	L9	80	433	C12AA04WS	N5	L5
35	10	118	1/2	40	1,212	C12AA06WS	N13	L13	80	606	C12AA04WS	N7	L7
50	10	169	1/2	32	1,386	C12AA06WS	N14	L14	64	693	C12AA06WS	N7	L7
65	10	219	1/2	24	1,351	C12AA06WS	N14	L14	48	675	C12AA06WS	N7	L7
75	10	253	1/2	22	1,429	C12AA06WS	N15	L15	44	714	C12AA06WS	N8	L8
100	10	338	1/2	16	1,386	C12AA06WS	N14	L14	32	693	C12AA06WS	N7	L7
125	10	422	1/2	12	1,299	C12AA06WS	N13	L13	24	650	C12AA04WS	N7	L7
				8-Way Transverse, Longitudinal Brace Pattern (B17.1)									
150	10	506	1/2	11	1,429	C12AA06WS	N15	L15					
175	10	591	1/2	9	1,364	C12AA06WS	N14	L14					
200	10	675	1/2	8	1,386	C12AA06WS	N14	L14					
225	10	759	1/2	7	1,364	C12AA06WS	N14	L14					

1. TVL = DL + Fv + ($0.2S_{DS}$/1.4 x Wp). All Terms Are Working Loads. Based On Eccentric Loading, 35% Of Total Load Allocated Per Outboard Rod.
2. Reductions In Actual Installed Brace Spacing Will Result In An Equal Percentage Reduction In Brace Reaction. As An Option When This Occurs ISAT May Substitute An Alternate Anchorage From Tables D1 or D2 Which Meets or Exceeds The Lowered Brace Reaction.
3. At Max. 30 Degree Brace Inclination.
4. Min. 3,000 psi NWC. Any "N Series" Connection May Be Utilized Having A Numeric Designation Equal To Or Higher Than That Shown.
5. Min. 3,000 psi NWC or LWC. Any "L Series" Connection May Be Utilized Having A Numeric Designation Equal To Or Higher Than That Shown.
6. As An Alternate, Brace Anchorage Connections To Structure May Be Employed Using Any Detail From Structural Connections Section "D" Series Details Where Assembly Design Value Meets Or Exceeds Brace Reaction.
7. For Trade Specific Bracing Installation Notes, Refer To Page 8.1 or 10.1.
8. Utilize Any "G" Series Vertical Support Connection Having A Design Value Equal To Or Greater Than The Corresponding "Rod Total Vertical Load".

REVIEWED FOR CODE COMPLIANCE BY William Staehlin DATE: 01-26-2024 CALIFORNIA BUILDING CODE

REGISTERED PROFESSIONAL ENGINEER MARCIN WASAZNIK S 6612 STRUCTURAL STATE OF CALIFORNIA

ISAT
A Division of Tomarco Contractor Specialties
International Seismic Application Technology
14848 Northam Street, La Mirada, CA 90638
877-999-4728 (Toll Free) 714-523-0845 (Fax)
www.isatsb.com

Rev. 0
8/03/2018
Page
C20-0.75-30
Outboard

CABLE BRACING REQUIREMENTS [7]

3-ROD TRAPEZE MOUNTED PIPING (Plumbing, Mechanical, Process, Medical Gas) — **MAXIMUM SEISMIC DESIGN FORCE = 0.75 G's**

Requires Use of ISAT Seismic Brackets. Use of Any Non-ISAT Bracket Voids Engineering. — *2013 California Building Code Compliant*

Maximum Trapeze Load (lbs/lf)	Max. Vertical Support Spacing (ft.)	Outboard [1] Rod Total Vertical Load (lbs)	Min. [8] Vertical Support Rod Dia. (in.)	OUTBOARD TRANSVERSE BRACING REQUIREMENTS					OUTBOARD LONGITUDINAL BRACING REQUIREMENTS				
				Max. [2] Brace Spacing (ft.)	Brace [3] Reaction P (lbs)	Min. Brace Assembly E - Pages	Min. Brace Anchorage [6] Form Pour [4] Deck Page D1	Min. Brace Anchorage [6] Metal [5] Deck Page D2	Max. [2] Brace Spacing (ft.)	Brace [3] Reaction P (lbs)	Min. Brace Assembly E - Pages	Min. Brace Anchorage [6] Form Pour [4] Deck Page D1	Min. Brace Anchorage [6] Metal [5] Deck Page D2
				2-Way Transverse Brace Pattern (B17.0)					8-Way Transverse, Longitudinal Brace Pattern (B17.1)				
11	10	37	1/2	40	513	C12AA04WS	N6	L6	80	257	C12AA04WS	N3	L3
25	10	84	5/8	40	1,167	C58AA06WS	N12	L12	80	583	C58AA04WS	N6	L6
35	10	118	5/8	38	1,552	C58DG06TS	N16	L16	76	776	C58AA06WS	N8	L8
50	10	169	5/8	26	1,517	C58DG06TS	N16	L16	52	758	C58AA06WS	N8	L8
65	10	219	5/8	20	1,517	C58DG06TS	N16	L16	40	758	C58AA06WS	N8	L8
75	10	253	5/8	18	1,575	C58DG06TS	N16	L16	36	788	C58AA06WS	N8	L8
100	10	338	5/8	14	1,634	C58DG06TS	N17	L17	28	817	C58AA06WS	N9	L9
125	10	422	5/8	10	1,458	C58AA06WS	N15	L15	20	729	C58AA06WC	N8	L8
				8-Way Transverse, Longitudinal Brace Pattern (B17.1)									
150	10	506	5/8	10	1,750	C58DG06TS	N18	L18					
175	10	591	5/8	8	1,634	C58DG06TS	N17	L17					
200	10	675	5/8	7	1,634	C58DG06TS	N17	L17					
225	10	759	5/8	6	1,575	C58DG06TS	N16	L16					

1. TVL = DL + Fv + ($0.2S_{DS}$/1.4 x Wp). All Terms Are Working Loads. Based On Eccentric Loading, 35% Of Total Load Allocated Per Outboard Rod.
2. Reductions In Actual Installed Brace Spacing Will Result In An Equal Percentage Reduction In Brace Reaction. As An Option When This Occurs ISAT May Substitute An Alternate Anchorage From Tables D1 or D2 Which Meets or Exceeds The Lowered Brace Reaction.
3. At Max. 50 Degree Brace Inclination.
4. Min. 3,000 psi NWC. Any "N Series" Connection May Be Utilized Having A Numeric Designation Equal To Or Higher Than That Shown.
5. Min. 3,000 psi NWC or LWC. Any "L Series" Connection May Be Utilized Having A Numeric Designation Equal To Or Higher Than That Shown.
6. As An Alternate, Brace Anchorage Connections To Structure May Be Employed Using Any Detail From Structural Connections Section "D" Series Details Where Assembly Design Value Meets Or Exceeds Brace Reaction.
7. For Trade Specific Bracing Installation Notes, Refer To Page 8.1 or 10.1.
8. Utilize Any "G" Series Vertical Support Connection Having A Design Value Equal To Or Greater Than The Corresponding "Rod Total Vertical Load".

REVIEWED FOR CODE COMPLIANCE BY William Staehlin DATE: 01-26-2024 OPM-0403 CALIFORNIA BUILDING CODE 2022

REGISTERED PROFESSIONAL ENGINEER MARCIN WASAZNIK S 6612 STRUCTURAL STATE OF CALIFORNIA

ISAT
A Division of Tomarco Contractor Specialties
International Seismic Application Technology
14848 Northam Street, La Mirada, CA 90638
877-999-4728 (Toll Free) 714-523-0845 (Fax)
www.isatsb.com

Rev. 0
8/03/2018
Page
C20-0.75-45
Outboard

CABLE BRACING REQUIREMENTS [7]

3-ROD TRAPEZE MOUNTED PIPING (Plumbing, Mechanical, Process, Medical Gas) — **MAXIMUM SEISMIC DESIGN FORCE = 0.75 G's**

Requires Use of ISAT Seismic Brackets. Use of Any Non-ISAT Bracket Voids Engineering. — *2013 California Building Code Compliant*

Maximum Trapeze Load (lbs/lf)	Max. Vertical Support Spacing (ft.)	Outboard [1] Rod Total Vertical Load (lbs)	Min. [8] Vertical Support Rod Dia. (in.)	OUTBOARD TRANSVERSE BRACING REQUIREMENTS					OUTBOARD LONGITUDINAL BRACING REQUIREMENTS				
				Max. [2] Brace Spacing (ft.)	Brace [3] Reaction P (lbs)	Min. Brace Assembly E- Pages	Min. Brace Anchorage [6] Form Pour [4] Deck Page D1	Min. Brace Anchorage [6] Metal [5] Deck Page D2	Max. [2] Brace Spacing (ft.)	Brace [3] Reaction P (lbs)	Min. Brace Assembly E- Pages	Min. Brace Anchorage [6] Form Pour [4] Deck Page D1	Min. Brace Anchorage [6] Metal [5] Deck Page D2
				2-Way Transverse Brace Pattern (B17.0)					8-Way Transverse, Longitudinal Brace Pattern (B17.1)				
11	10	37	1/2	40	660	C12AA04WS	N7	L7	80	330	C12AA04WS	N4	L4
25	10	84	3/4	39	1,463	C34DG06WS	N15	L15	78	731	C34DG06WS	N8	L8
35	10	118	3/4	28	1,470	C34DG06WS	N15	L15	56	735	C34DG06WS	N8	L8
50	10	169	5/8	19	1,425	C58AA06WS	N15	L15	38	713	C58AA06WS	N8	L8
65	10	219	3/4	15	1,463	C34DG06WS	N15	L15	30	731	C34DG06WS	N8	L8
75	10	253	5/8	12	1,350	C58AA06WS	N14	L14	24	675	C58AA06WS	N7	L7
100	10	338	5/8	9	1,350	C58AA06WS	N14	L14	18	675	C58AA06WS	N7	L7
				8-Way Transverse, Longitudinal Brace Pattern (B17.1)									
125	10	422	5/8	7	1,313	C58AA06WS	N14	L14					
150	10	506	5/8	6	1,350	C58AA06WS	N14	L14					
175	10	591	5/8	5	1,313	C58AA06WS	N14	L14					
200	10	675	5/8	4	1,200	C58AA06WS	N12	L12					
225	10	759	5/8	4	1,350	C58AA06WS	N14	L14					

1. TVL = DL + Fv + ($0.2S_{DS}$/1.4 x Wp). All Terms Are Working Loads. Based On Eccentric Loading, 35% Of Total Load Allocated Per Outboard Rod.
2. Reductions In Actual Installed Brace Spacing Will Result In An Equal Percentage Reduction In Brace Reaction. As An Option When This Occurs ISAT May Substitute An Alternate Anchorage From Tables D1 or D2 Which Meets or Exceeds The Lowered Brace Reaction.
3. At Max. 60 Degree Brace Inclination.
4. Min. 3,000 psi NWC. Any "N Series" Connection May Be Utilized Having A Numeric Designation Equal To Or Higher Than That Shown.
5. Min. 3,000 psi NWC or LWC. Any "L Series" Connection May Be Utilized Having A Numeric Designation Equal To Or Higher Than That Shown.
6. As An Alternate, Brace Anchorage Connections To Structure May Be Employed Using Any Detail From Structural Connections Section "D" Series Details Where Assembly Design Value Meets Or Exceeds Brace Reaction.
7. For Trade Specific Bracing Installation Notes, Refer To Page 8.1 or 10.1.
8. Utilize Any "G" Series Vertical Support Connection Having A Design Value Equal To Or Greater Than The Corresponding "Rod Total Vertical Load".

REVIEWED FOR CODE COMPLIANCE
OPM-0403
BY: William Staehlin
DATE: 01-26-2024
CALIFORNIA BUILDING CODE

REGISTERED PROFESSIONAL ENGINEER
MARCIN WASAZNIK
S-6612
STRUCTURAL
STATE OF CALIFORNIA

ISAT
A Division of Tomarco Contractor Specialties

International Seismic Application Technology
14848 Northam Street, La Mirada, CA 90638
877-999-4728 (Toll Free) 714-523-0845 (Fax)
www.isatsb.com

Rev. 1
03/12/19
Page
C20-0.75-60
Outboard

CABLE BRACING REQUIREMENTS [7]

3-ROD TRAPEZE MOUNTED PIPING (Plumbing, Mechanical, Process, Medical Gas) — **MAXIMUM SEISMIC DESIGN FORCE = 1.00 G's**

Requires Use of ISAT Seismic Brackets. Use of Any Non-ISAT Bracket Voids Engineering. — *2013 California Building Code Compliant*

Maximum Trapeze Load (lbs/lf)	Max. Vertical Support Spacing (ft.)	Outboard [1] Rod Total Vertical Load (lbs)	Min. [8] Vertical Support Rod Dia. (in.)	OUTBOARD TRANSVERSE BRACING REQUIREMENTS					OUTBOARD LONGITUDINAL BRACING REQUIREMENTS				
				Max. [2] Brace Spacing (ft.)	Brace [3] Reaction P (lbs)	Min. Brace Assembly E - Pages	Min. Brace Anchorage [6] Form Pour [4] Deck Page D1	Min. Brace Anchorage [6] Metal [5] Deck Page D2	Max. [2] Brace Spacing (ft.)	Brace [3] Reaction P (lbs)	Min. Brace Assembly E - Pages	Min. Brace Anchorage [6] Form Pour [4] Deck Page D1	Min. Brace Anchorage [6] Metal [5] Deck Page D2
				2-Way Transverse Brace Pattern (B17.0)					8-Way Transverse, Longitudinal Brace Pattern (B17.1)				
11	10	37	3/8	40	508	C38AA04WS	N6	L6	80	254	C38AA04WS	N3	L3
25	10	84	1/2	40	1,155	C12AA06WS	N12	L12	80	577	C12AA04WS	N6	L6
35	10	118	1/2	34	1,374	C12AA06WS	N14	L14	68	687	C12AA06WS	N7	L7
50	10	169	1/2	24	1,386	C12AA06WS	N14	L14	48	693	C12AA06WS	N7	L7
65	10	219	1/2	18	1,351	C12AA06WS	N14	L14	36	675	C12AA06WS	N7	L7
75	10	253	1/2	16	1,386	C12AA06WS	N14	L14	32	693	C12AA06WS	N7	L7
100	10	338	1/2	12	1,386	C12AA06WS	N14	L14	24	693	C12AA06WS	N7	L7
125	10	422	1/2	10	1,443	C12AA06WS	N15	L15	20	722	C12AA06WS	N8	L8
				8-Way Transverse, Longitudinal Brace Pattern (B17.1)									
150	10	506	1/2	8	1,386	C12AA06WS	N14	L14					
175	10	591	1/2	7	1,415	C12AA06WS	N15	L15					
200	10	675	1/2	6	1,386	C12AA06WS	N14	L14					
225	10	759	1/2	5	1,299	C12AA06WS	N13	L13					

1. TVL = DL + Fv + ($0.2S_{DS}$/1.4 x Wp). All Terms Are Working Loads. Based On Eccentric Loading, 35% Of Total Load Allocated Per Outboard Rod.
2. Reductions In Actual Installed Brace Spacing Will Result In An Equal Percentage Reduction In Brace Reaction. As An Option When This Occurs ISAT May Substitute An Alternate Anchorage From Tables D1 or D2 Which Meets or Exceeds The Lowered Brace Reaction.
3. At Max. 30 Degree Brace Inclination.
4. Min. 3,000 psi NWC. Any "N Series" Connection May Be Utilized Having A Numeric Designation Equal To Or Higher Than That Shown.
5. Min. 3,000 psi NWC or LWC. Any "L Series" Connection May Be Utilized Having A Numeric Designation Equal To Or Higher Than That Shown.
6. As An Alternate, Brace Anchorage Connections To Structure May Be Employed Using Any Detail From Structural Connections Section "D" Series Details Where Assembly Design Value Meets Or Exceeds Brace Reaction.
7. For Trade Specific Bracing Installation Notes, Refer To Page 8.1 or 10.1.
8. Utilize Any "G" Series Vertical Support Connection Having A Design Value Equal To Or Greater Than The Corresponding "Rod Total Vertical Load".

REVIEWED FOR CODE COMPLIANCE BY: William Staehlin DATE: 01-26-2024 CALIFORNIA BUILDING CODE

REGISTERED PROFESSIONAL ENGINEER MARCIN WASAZNIK S-6612 STRUCTURAL STATE OF CALIFORNIA

ISAT
A Division of Tomarco Contractor Specialties
International Seismic Application Technology
14848 Northam Street, La Mirada, CA 90638
877-999-4728 (Toll Free) 714-523-0845 (Fax)
www.isatsb.com

Rev. 0
8/03/2018
Page
C20-1-30
Outboard

CABLE BRACING REQUIREMENTS [7]

3-ROD TRAPEZE MOUNTED PIPING (Plumbing, Mechanical, Process, Medical Gas) — **MAXIMUM SEISMIC DESIGN FORCE = 1.00 G's**

Requires Use of ISAT Seismic Brackets. Use of Any Non-ISAT Bracket Voids Engineering. — *2013 California Building Code Compliant*

Maximum Trapeze Load (lbs/lf)	Max. Vertical Support Spacing (ft.)	Outboard [1] Rod Total Vertical Load (lbs)	Min. [8] Vertical Support Rod Dia. (in.)	OUTBOARD TRANSVERSE BRACING REQUIREMENTS					OUTBOARD LONGITUDINAL BRACING REQUIREMENTS				
				Max. [2] Brace Spacing (ft.)	Brace [3] Reaction P (lbs)	Min. Brace Assembly E - Pages	Min. Brace Anchorage [6] Form Pour [4] Deck Page D1	Min. Brace Anchorage [6] Metal [5] Deck Page D2	Max. [2] Brace Spacing (ft.)	Brace [3] Reaction P (lbs)	Min. Brace Assembly E - Pages	Min. Brace Anchorage [6] Form Pour [4] Deck Page D1	Min. Brace Anchorage [6] Metal [5] Deck Page D2
				2-Way Transverse Brace Pattern (B17.0)					8-Way Transverse, Longitudinal Brace Pattern (B17.1)				
11	10	37	1/2	40	685	C12AA06WS	N7	L7	80	342	C12AA04WS	N4	L4
25	10	84	5/8	40	1,556	C58DG06TS	N16	L16	80	778	C58AA06WS	N8	L8
35	10	118	5/8	28	1,525	C58DG06TS	N16	L16	56	762	C58AA06WS	N8	L8
50	10	169	5/8	20	1,556	C58DG06TS	N16	L16	40	778	C58AA06WS	N8	L8
65	10	219	5/8	16	1,618	C58DG06TS	N17	L17	32	809	C58AA06WS	N9	L9
75	10	253	5/8	14	1,634	C58DG06TS	N17	L17	28	817	C58AA06WS	N9	L9
100	10	338	5/8	10	1,556	C58DG06TS	N16	L16	20	778	C58AA06WS	N8	L8
				8-Way Transverse, Longitudinal Brace Pattern (B17.1)									
125	10	422	5/8	9	1,750	C58DG06TS	N18	L18					
150	10	506	5/8	7	1,634	C58DG06TS	N17	L17					
175	10	591	5/8	6	1,634	C58DG06TS	N17	L17					
200	10	675	5/8	5	1,556	C58DG06TS	N16	L16					
225	10	759	5/8	5	1,750	C58DG06TS	N18	L18					

1. TVL = DL + Fv + ($0.2S_{DS}$/1.4 x Wp). All Terms Are Working Loads. Based On Eccentric Loading, 35% Of Total Load Allocated Per Outboard Rod.
2. Reductions In Actual Installed Brace Spacing Will Result In An Equal Percentage Reduction In Brace Reaction. As An Option When This Occurs ISAT May Substitute An Alternate Anchorage From Tables D1 or D2 Which Meets or Exceeds The Lowered Brace Reaction.
3. At Max. 50 Degree Brace Inclination.
4. Min. 3,000 psi NWC. Any "N Series" Connection May Be Utilized Having A Numeric Designation Equal To Or Higher Than That Shown.
5. Min. 3,000 psi NWC or LWC. Any "L Series" Connection May Be Utilized Having A Numeric Designation Equal To Or Higher Than That Shown.
6. As An Alternate, Brace Anchorage Connections To Structure May Be Employed Using Any Detail From Structural Connections Section "D" Series Details Where Assembly Design Value Meets Or Exceeds Brace Reaction.
7. For Trade Specific Bracing Installation Notes, Refer To Page 8.1 or 10.1.
8. Utilize Any "G" Series Vertical Support Connection Having A Design Value Equal To Or Greater Than The Corresponding "Rod Total Vertical Load".

REVIEWED FOR CODE COMPLIANCE BY William Staehlin DATE: 01-26-2024 CALIFORNIA BUILDING CODE 2022

REGISTERED PROFESSIONAL ENGINEER MARCIN WASAZNIK S-6612 STRUCTURAL STATE OF CALIFORNIA

ISAT
A Division of Tomarco Contractor Specialties
International Seismic Application Technology
14848 Northam Street, La Mirada, CA 90638
877-999-4728 (Toll Free) 714-523-0845 (Fax)
www.isatsb.com

Rev. 0
8/03/2018
Page
C20-1-45
Outboard

CABLE BRACING REQUIREMENTS [7]

3-ROD TRAPEZE MOUNTED PIPING (Plumbing, Mechanical, Process, Medical Gas) — **MAXIMUM SEISMIC DESIGN FORCE = 1.00 G's**

Requires Use of ISAT Seismic Brackets. Use of Any Non-ISAT Bracket Voids Engineering. — *2013 California Building Code Compliant*

Maximum Trapeze Load (lbs/lf)	Max. Vertical Support Spacing (ft.)	Outboard [1] Rod Total Vertical Load (lbs)	Min. [8] Vertical Support Rod Dia. (in.)	OUTBOARD TRANSVERSE BRACING REQUIREMENTS					OUTBOARD LONGITUDINAL BRACING REQUIREMENTS				
				Max. [2] Brace Spacing (ft.)	Brace [3] Reaction P (lbs)	Min. Brace Assembly E- Pages	Min. Brace Anchorage [6] Form Pour [4] Deck Page D1	Min. Brace Anchorage [6] Metal [5] Deck Page D2	Max. [2] Brace Spacing (ft.)	Brace [3] Reaction P (lbs)	Min. Brace Assembly E- Pages	Min. Brace Anchorage [6] Form Pour [4] Deck Page D1	Min. Brace Anchorage [6] Metal [5] Deck Page D2
				2-Way Transverse Brace Pattern (B17.0)					8-Way Transverse, Longitudinal Brace Pattern (B17.1)				
11	10	37	1/2	40	880	C12AA06WS	N9	L9	80	440	C12AA04WS	N5	L5
25	10	84	3/4	29	1,450	C34DG06WS	N15	L15	58	725	C34DG06WS	N8	L8
35	10	118	3/4	21	1,470	C34DG06WS	N15	L15	42	735	C34DG06WS	N8	L8
50	10	169	5/8	14	1,400	C58AA06WS	N14	L14	28	700	C58AA06WS	N7	L7
65	10	219	5/8	11	1,430	C58AA06WS	N15	L15	22	715	C58AA06WS	N8	L8
75	10	253	5/8	9	1,350	C58AA06WS	N14	L14	18	675	C58AA06WS	N7	L7
				8-Way Transverse, Longitudinal Brace Pattern (B17.1)									
100	10	338	5/8	7	1,400	C58AA06WS	N14	L14					
125	10	422	5/8	5	1,250	C58AA06WS	N13	L13					
150	10	506	5/8	4	1,200	C58AA06WS	N12	L12					
175	10	591	5/8	4	1,400	C58AA06WS	N14	L14					
200	10	675	5/8	3	1,200	C58AA06WS	N12	L12					
225	10	759	5/8	3	1,350	C58AA06WS	N14	L14					

1. TVL = DL + Fv + ($0.2S_{DS}$/1.4 x Wp). All Terms Are Working Loads. Based On Eccentric Loading, 35% Of Total Load Allocated Per Outboard Rod.
2. Reductions In Actual Installed Brace Spacing Will Result In An Equal Percentage Reduction In Brace Reaction. As An Option When This Occurs ISAT May Substitute An Alternate Anchorage From Tables D1 or D2 Which Meets or Exceeds The Lowered Brace Reaction.
3. At Max. 60 Degree Brace Inclination.
4. Min. 3,000 psi NWC. Any "N Series" Connection May Be Utilized Having A Numeric Designation Equal To Or Higher Than That Shown.
5. Min. 3,000 psi NWC or LWC. Any "L Series" Connection May Be Utilized Having A Numeric Designation Equal To Or Higher Than That Shown.
6. As An Alternate, Brace Anchorage Connections To Structure May Be Employed Using Any Detail From Structural Connections Section "D" Series Details Where Assembly Design Value Meets Or Exceeds Brace Reaction.
7. For Trade Specific Bracing Installation Notes, Refer To Page 8.1 or 10.1.
8. Utilize Any "G" Series Vertical Support Connection Having A Design Value Equal To Or Greater Than The Corresponding "Rod Total Vertical Load".

REVIEWED FOR CODE COMPLIANCE BY: William Staehlin DATE: 01-26-2024 CALIFORNIA BUILDING CODE 2013

REGISTERED PROFESSIONAL ENGINEER MARCIN WASAZNIK S-6612 STRUCTURAL STATE OF CALIFORNIA

ISAT
A Division of Tomarco Contractor Specialties
International Seismic Application Technology
14848 Northam Street, La Mirada, CA 90638
877-999-4728 (Toll Free) 714-523-0845 (Fax)
www.isatsb.com

Rev. 1
03/12/19
Page
C20-1-60
Outboard

RIGID BRACING REQUIREMENTS [7]

ROD HUNG HVAC DUCT (Rectangular and 2-Rod Round) — **MAXIMUM SEISMIC DESIGN FORCE = 0.25 G's**

Requires Use of ISAT Seismic Brackets. Use of Any Non-ISAT Bracket Voids Engineering. — *2013 California Building Code Compliant*

Maximum Trapeze Load (lbs/lf)	Max. Vertical Support Spacing (ft.)	Rod [1] Total Vertical Load (lbs)	Min. [8] Vertical Support Rod Dia. (in.)	TRANSVERSE BRACING REQUIREMENTS: Max. [2] Brace Spacing (ft.)	Brace [3] Reaction P (lbs)	Min. Brace Assembly E - Pages	Min. Brace Anchorage [6]: Form Pour [4] Deck Page D1	Metal [5] Deck Page D2	LONGITUDINAL BRACING REQUIREMENTS: Max. [2] Brace Spacing (ft.)	Brace [3] Reaction P (lbs)	Min. Brace Assembly E - Pages	Min. Brace Anchorage [6]: Form Pour [4] Deck Page D1	Metal [5] Deck Page D2
				1-Way Transverse Brace Pattern (B30.0 & B33.0)					3-Way Transverse, Longitudinal Brace Pattern (B30.2 & B33.2)				
11.0	10	175	3/8	30	95	R38AAEM306	N1	L1	60	124	R38AAEM306	N2	L2
25.0	10	397	1/2	30	217	R12AAEM306	N3	L3	60	281	R12AAEM306	N3	L3
35.0	10	556	1/2	30	303	R12AAEM409	N4	L4	60	394	R12AAEM406	N4	L4
50.0	10	794	1/2	30	433	R12AAEM406	N5	L5	60	563	R12AAEM406	N6	L6
65.0	10	1,032	1/2	30	563	R12AAEM406	N6	L6	60	732	R12AAEM509	N8	L8
75.0	10	1,191	1/2	30	650	R12AAEM406	N7	L7	60	844	R12AAEM506	N9	L9
100.0	10	1,588	5/8	30	866	R58AAEM506	N9	L9	60	1,126	R58AAEM506	N12	L12
125.0	10	1,985	5/8	30	1,083	R58AAEM506	N11	L11	60	1,407	R58AAEM506	N15	L15
				TRANSVERSE, LONGITUDINAL BRACING REQUIREMENTS									
				4-Way Transverse, Longitudinal Brace Pattern (B30.3 & B33.3)									
150.0	10	1,849	5/8	30	844	R58AAEM506	N9	L9					
175.0	10	2,157	5/8	30	985	R58AAEM506	N10	L10					
200.0	10	2,465	3/4	30	1,126	R34DGB1P06	N12	L12					
225.0	10	2,720	3/4	28	1,182	R34DGB1P06	N12	L12					

1. TVL = DL + Fv + ($0.2S_{DS}$/1.4 x Wp). All Terms Are Working Loads. Based On Eccentric Loading, 65% Of Total Load Allocated Per Rod.
2. Reductions In Actual Installed Brace Spacing Will Result In An Equal Percentage Reduction In Brace Reaction. As An Option When This Occurs ISAT May Substitute An Alternate Anchorage From Tables D1 or D2 Which Meets or Exceeds The Lowered Brace Reaction.
3. At Max. 30 Degree Brace Inclination.
4. Min. 3,000 psi NWC. Any "N Series" Connection May Be Utilized Having A Numeric Designation Equal To Or Higher Than That Shown.
5. Min. 3,000 psi NWC or LWC. Any "L Series" Connection May Be Utilized Having A Numeric Designation Equal To Or Higher Than That Shown.
6. As An Alternate, Brace Anchorage Connections To Structure May Be Employed Using Any Detail From Structural Connections Section "D" Series Details Where Assembly Design Value Meets Or Exceeds Brace Reaction.
7. For Trade Specific Bracing Installation Notes, Refer To Page 9.1.
8. Utilize Any "G" Series Vertical Support Connection Having A Design Value Equal To Or Greater Than The Corresponding "Rod Total Vertical Load".

REVIEWED FOR CODE COMPLIANCE
HCAi
OPM-0403
BY: William Staehlin
DATE: 01-26-2024
CALIFORNIA BUILDING CODE, 2022

REGISTERED PROFESSIONAL ENGINEER
MARCIN WASAZNIK
S 6612
STRUCTURAL
STATE OF CALIFORNIA

ISAT
A Division of Tomarco Contractor Specialties
International Seismic Application Technology
14848 Northam Street, La Mirada, CA 90638
877-999-4728 (Toll Free) 714-523-0845 (Fax)
www.isatsb.com

Rev. 0
08/03/18
Page
C21-0.25-30

RIGID BRACING REQUIREMENTS [7]

ROD HUNG HVAC DUCT (Rectangular and 2-Rod Round) — **MAXIMUM SEISMIC DESIGN FORCE = 0.25 G's**

Requires Use of ISAT Seismic Brackets. Use of Any Non-ISAT Bracket Voids Engineering. — *2013 California Building Code Compliant*

Maximum Trapeze Load (lbs/lf)	Max. Vertical Support Spacing (ft.)	Rod [1] Total Vertical Load (lbs)	Min. [8] Vertical Support Rod Dia. (in.)	TRANSVERSE BRACING REQUIREMENTS: Max. [2] Brace Spacing (ft.)	Brace [3] Reaction P (lbs)	Min. Brace Assembly E - Pages	Min. Brace Anchorage [6]: Form Pour [4] Deck Page D1	Metal [5] Deck Page D2	LONGITUDINAL BRACING REQUIREMENTS: Max. [2] Brace Spacing (ft.)	Brace [3] Reaction P (lbs)	Min. Brace Assembly E - Pages	Min. Brace Anchorage [6]: Form Pour [4] Deck Page D1	Metal [5] Deck Page D2
				1-Way Transverse Brace Pattern (B30.0 & B33.0)					3-Way Transverse, Longitudinal Brace Pattern (B30.2 & B33.2)				
11.0	10	258	3/8	30	128	R38AAEM306	N2	L2	60	167	R38AAEM306	N2	L2
25.0	10	586	1/2	30	292	R12AAEM306	N3	L3	60	379	R12AAEM406	N4	L4
35.0	10	820	1/2	30	408	R12AAEM406	N5	L5	60	531	R12AAEM406	N6	L6
50.0	10	1,172	1/2	30	583	R12AAEM406	N6	L6	60	758	R12AAEM509	N8	L8
65.0	10	1,523	5/8	30	758	R58AAEM509	N8	L8	60	986	R58AAEM506	N10	L10
75.0	10	1,758	5/8	30	875	R58AAEM506	N9	L9	60	1,138	R58AAEM506	N12	L12
100.0	10	2,343	3/4	30	1,167	R34CFB1P06	N12	L12	60	1,517	R34CFB2P12	N16	L16
125.0	10	2,929	3/4	30	1,458	R34CFB2P12	N15	L15	60	1,896	R34DGB2P09	N19	L19
				TRANSVERSE, LONGITUDINAL BRACING REQUIREMENTS									
				4-Way Transverse, Longitudinal Brace Pattern (B30.3 & B33.3)									
150.0	10	2,416	3/4	30	1,138	R34CFB1P06	N12	L12					
175.0	10	2,818	3/4	30	1,327	R34CFB2P12	N14	L14					
200.0	10	3,221	3/4	30	1,517	R34CFB2P12	N16	L16					
225.0	10	3,459	3/4	27	1,536	R34CFB2P12	N16	L16					

1. TVL = DL + Fv + ($0.2S_{DS}$/1.4 x Wp). All Terms Are Working Loads. Based On Eccentric Loading, 65% Of Total Load Allocated Per Rod.
2. Reductions In Actual Installed Brace Spacing Will Result In An Equal Percentage Reduction In Brace Reaction. As An Option When This Occurs ISAT May Substitute An Alternate Anchorage From Tables D1 or D2 Which Meets or Exceeds The Lowered Brace Reaction.
3. At Max. 50 Degree Brace Inclination.
4. Min. 3,000 psi NWC. Any "N Series" Connection May Be Utilized Having A Numeric Designation Equal To Or Higher Than That Shown.
5. Min. 3,000 psi NWC or LWC. Any "L Series" Connection May Be Utilized Having A Numeric Designation Equal To Or Higher Than That Shown.
6. As An Alternate, Brace Anchorage Connections To Structure May Be Employed Using Any Detail From Structural Connections Section "D" Series Details Where Assembly Design Value Meets Or Exceeds Brace Reaction.
7. For Trade Specific Bracing Installation Notes, Refer To Page 9.1.
8. Utilize Any "G" Series Vertical Support Connection Having A Design Value Equal To Or Greater Than The Corresponding "Rod Total Vertical Load".

REVIEWED FOR CODE COMPLIANCE
HCAi
OPM-0403
BY: William Staehlin
DATE: 01-26-2024
CALIFORNIA BUILDING CODE, 2022

REGISTERED PROFESSIONAL ENGINEER
MARCIN WASAZNIK
S 6612
STRUCTURAL
STATE OF CALIFORNIA

ISAT
A Division of Tomarco Contractor Specialties
International Seismic Application Technology
14848 Northam Street, La Mirada, CA 90638
877-999-4728 (Toll Free) 714-523-0845 (Fax)
www.isatsb.com

Rev. 0
10/19/18
Page
C21-0.25-45

RIGID BRACING REQUIREMENTS [7]

ROD HUNG HVAC DUCT (Rectangular and 2-Rod Round) — **MAXIMUM SEISMIC DESIGN FORCE = 0.25 G's**

Requires Use of ISAT Seismic Brackets. Use of Any Non-ISAT Bracket Voids Engineering. — *2013 California Building Code Compliant*

Maximum Trapeze Load (lbs/lf)	Max. Vertical Support Spacing (ft.)	Rod [1] Total Vertical Load (lbs)	Min. [8] Vertical Support Rod Dia. (in.)	TRANSVERSE BRACING REQUIREMENTS					LONGITUDINAL BRACING REQUIREMENTS				
				Max. [2] Brace Spacing (ft.)	Brace [3] Reaction P (lbs)	Min. Brace Assembly E - Pages	Min. Brace Anchorage [6] Form Pour [4] Deck Page D1	Min. Brace Anchorage [6] Metal [5] Deck Page D2	Max. [2] Brace Spacing (ft.)	Brace [3] Reaction P (lbs)	Min. Brace Assembly E - Pages	Min. Brace Anchorage [6] Form Pour [4] Deck Page D1	Min. Brace Anchorage [6] Metal [5] Deck Page D2
				1-Way Transverse Brace Pattern (B30.0 & B33.0)					3-Way Transverse, Longitudinal Brace Pattern (B30.2 & B33.2)				
11.0	10	331	3/8	30	165	R38AAEM306	N2	L2	60	215	R38AAEM306	N3	L3
25.0	10	752	1/2	30	375	R12AAEM406	N4	L4	60	488	R12AAEM406	N5	L5
35.0	10	1,053	1/2	30	525	R12AAEM406	N6	L6	60	683	R12AAEM509	N7	L7
50.0	10	1,504	5/8	30	750	R58AAEM509	N8	L8	60	975	R58AAEM506	N10	L10
65.0	10	1,955	5/8	30	975	R58AAEM506	N10	L10	60	1,268	R58AAEM506	N13	L13
				TRANSVERSE, LONGITUDINAL BRACING REQUIREMENTS									
				4-Way Transverse, Longitudinal Brace Pattern (B30.3 & B33.3)									
75.0	10	1,457	1/2	30	731	R12AAEM509	N8	L8					
100.0	10	1,943	5/8	30	975	R58AAEM506	N10	L10					
100.0	10	1,943	5/8	30	975	R58AAEM506	N10	L10					
125.0	10	2,428	3/4	30	1,219	R34DGB1P06	N13	L13					
150.0	10	2,808	3/4	28	1,365	R34DGB1S06	N14	L14					
175.0	10	3,027	3/4	24	1,365	R34DGB1S06	N14	L14					
200.0	10	3,246	3/4	21	1,365	R34DGB1S06	N14	L14					
225.0	10	3,492	3/4	19	1,389	R34DGB1S06	N14	L14					

1. TVL = DL + Fv + ($0.2S_{DS}$/1.4 x Wp). All Terms Are Working Loads. Based On Eccentric Loading, 65% Of Total Load Allocated Per Rod.
2. Reductions In Actual Installed Brace Spacing Will Result In An Equal Percentage Reduction In Brace Reaction. As An Option When This Occurs ISAT May Substitute An Alternate Anchorage From Tables D1 or D2 Which Meets or Exceeds The Lowered Brace Reaction.
3. At Max. 60 Degree Brace Inclination.
4. Min. 3,000 psi NWC. Any "N Series" Connection May Be Utilized Having A Numeric Designation Equal To Or Higher Than That Shown.
5. Min. 3,000 psi NWC or LWC. Any "L Series" Connection May Be Utilized Having A Numeric Designation Equal To Or Higher Than That Shown.
6. As An Alternate, Brace Anchorage Connections To Structure May Be Employed Using Any Detail From Structural Connections Section "D" Series Details Where Assembly Design Value Meets Or Exceeds Brace Reaction.
7. For Trade Specific Bracing Installation Notes, Refer To Page 9.1.
8. Utilize Any "G" Series Vertical Support Connection Having A Design Value Equal To Or Greater Than The Corresponding "Rod Total Vertical Load".

REVIEWED FOR CODE COMPLIANCE
OPM 0403
BY: William Stachlin
DATE: 01/26/2024
CALIFORNIA BUILDING CODE 2022

REGISTERED PROFESSIONAL ENGINEER
MARCIN WASAZNIK
S 6612
STRUCTURAL
STATE OF CALIFORNIA

ISAT
A Division of Tomarco Contractor Specialties

International Seismic Application Technology
14848 Northam Street, La Mirada, CA 90638
877-999-4728 (Toll Free) 714-523-0845 (Fax)
www.isatsb.com

Rev. 0
08/03/18
Page
C21-0.25-60

RIGID BRACING REQUIREMENTS [7]

ROD HUNG HVAC DUCT (Rectangular and 2-Rod Round) — **MAXIMUM SEISMIC DESIGN FORCE = 0.50 G's**

Requires Use of ISAT Seismic Brackets. Use of Any Non-ISAT Bracket Voids Engineering. — *2013 California Building Code Compliant*

Maximum Trapeze Load (lbs/lf)	Max. Vertical Support Spacing (ft.)	Rod [1] Total Vertical Load (lbs)	Min. [8] Vertical Support Rod Dia. (in.)	TRANSVERSE BRACING REQUIREMENTS					LONGITUDINAL BRACING REQUIREMENTS				
				Max. [2] Brace Spacing (ft.)	Brace [3] Reaction P (lbs)	Min. Brace Assembly E - Pages	Min. Brace Anchorage [6] Form Pour [4] Deck Page D1	Min. Brace Anchorage [6] Metal [5] Deck Page D2	Max. [2] Brace Spacing (ft.)	Brace [3] Reaction P (lbs)	Min. Brace Assembly E - Pages	Min. Brace Anchorage [6] Form Pour [4] Deck Page D1	Min. Brace Anchorage [6] Metal [5] Deck Page D2
				1-Way Transverse Brace Pattern (B30.0 & B33.0)					3-Way Transverse, Longitudinal Brace Pattern (B30.2 & B33.2)				
11.0	10	253	3/8	30	191	R38AAEM306	N2	L2	60	248	R38AAEM306	N3	L3
25.0	10	574	1/2	30	433	R12AAEM406	N5	L5	60	563	R12AAEM406	N6	L6
35.0	10	804	1/2	30	606	R12AAEM406	N7	L7	60	788	R12AAEM509	N8	L8
50.0	10	1,149	1/2	30	866	R12AAEM506	N9	L9	60	1,126	R12AAEM506	N12	L12
65.0	10	1,432	1/2	28	1,051	R12AAEM506	N11	L11	56	1,366	R12AAEM506	N14	L14
75.0	10	1,510	5/8	24	1,039	R58AAEM506	N11	L11	48	1,351	R58AAEM506	N14	L14
100.0	10	1,730	5/8	18	1,039	R58AAEM506	N11	L11	36	1,351	R58AAEM506	N14	L14
125.0	10	1,925	5/8	14	1,010	R58AAEM506	N11	L11	28	1,313	R58AAEM506	N14	L14
				TRANSVERSE, LONGITUDINAL BRACING REQUIREMENTS									
				4-Way Transverse, Longitudinal Brace Pattern (B30.3 & B33.3)									
150.0	10	2,204	5/8	25	1,407	R58AAEM506	N15	L15					
175.0	10	2,323	5/8	19	1,248	R58AAEM506	N13	L13					
200.0	10	2,465	3/4	15	1,126	R34DGB1P06	N12	L12					
225.0	10	2,720	3/4	14	1,182	R34DGB1P06	N12	L12					

1. TVL = DL + Fv + ($0.2S_{DS}$/1.4 x Wp). All Terms Are Working Loads. Based On Eccentric Loading, 65% Of Total Load Allocated Per Rod.
2. Reductions In Actual Installed Brace Spacing Will Result In An Equal Percentage Reduction In Brace Reaction. As An Option When This Occurs ISAT May Substitute An Alternate Anchorage From Tables D1 or D2 Which Meets or Exceeds The Lowered Brace Reaction.
3. At Max. 30 Degree Brace Inclination.
4. Min. 3,000 psi NWC. Any "N Series" Connection May Be Utilized Having A Numeric Designation Equal To Or Higher Than That Shown.
5. Min. 3,000 psi NWC or LWC. Any "L Series" Connection May Be Utilized Having A Numeric Designation Equal To Or Higher Than That Shown.
6. As An Alternate, Brace Anchorage Connections To Structure May Be Employed Using Any Detail From Structural Connections Section "D" Series Details Where Assembly Design Value Meets Or Exceeds Brace Reaction.
7. For Trade Specific Bracing Installation Notes, Refer To Page 9.1.
8. Utilize Any "G" Series Vertical Support Connection Having A Design Value Equal To Or Greater Than The Corresponding "Rod Total Vertical Load".

REVIEWED FOR CODE COMPLIANCE
OPM-0403
BY: William Staehlin
DATE: 01/26/2024
CALIFORNIA BUILDING CODE 2022

REGISTERED PROFESSIONAL ENGINEER
MARCIN WASAZNIK
S 6612
STRUCTURAL
STATE OF CALIFORNIA

ISAT
A Division of Tomarco Contractor Specialties

International Seismic Application Technology
14848 Northam Street, La Mirada, CA 90638
877-999-4728 (Toll Free) 714-523-0845 (Fax)
www.isatsb.com

Rev. 0
08/03/18
Page
C21-0.5-30

RIGID BRACING REQUIREMENTS [7]

ROD HUNG HVAC DUCT (Rectangular and 2-Rod Round) — **MAXIMUM SEISMIC DESIGN FORCE = 0.50 G's**

Requires Use of ISAT Seismic Brackets. Use of Any Non-ISAT Bracket Voids Engineering. — *2013 California Building Code Compliant*

Maximum Trapeze Load (lbs/lf)	Max. Vertical Support Spacing (ft.)	Rod [1] Total Vertical Load (lbs)	Min. [8] Vertical Support Rod Dia. (in.)	TRANSVERSE BRACING REQUIREMENTS: Max. [2] Brace Spacing (ft.)	Brace [3] Reaction P (lbs)	Min. Brace Assembly E - Pages	Min. Brace Anchorage [6]: Form Pour [4] Deck Page D1	Metal [5] Deck Page D2	LONGITUDINAL BRACING REQUIREMENTS: Max. [2] Brace Spacing (ft.)	Brace [3] Reaction P (lbs)	Min. Brace Assembly E - Pages	Min. Brace Anchorage [6]: Form Pour [4] Deck Page D1	Metal [5] Deck Page D2
				1-Way Transverse Brace Pattern (B30.0 & B33.0)					3-Way Transverse, Longitudinal Brace Pattern (B30.2 & B33.2)				
11.0	10	419	3/8	30	257	R38AAEM306	N3	L3	60	334	R38AAEM406	N4	L4
25.0	10	952	1/2	30	583	R12AAEM406	N6	L6	60	758	R12AAEM509	N8	L8
35.0	10	1,333	5/8	30	817	R58AAEM506	N9	L9	60	1,062	R58AAEM506	N11	L11
50.0	10	1,905	3/4	30	1,167	R34CFB1P06	N12	L12	60	1,517	R34CFB2P12	N16	L16
65.0	10	2,476	3/4	30	1,517	R34CFB2P12	N16	L16	60	1,972	R34DGB2P09	N20	L20
75.0	10	2,564	3/4	26	1,517	R34CFB2P12	N16	L16	52	1,972	R34DGB2P09	N20	L20
100.0	10	2,832	3/4	20	1,556	R34CFB2P12	N16	L16	40	2,022	R34DGB2P09	N21	L21
125.0	10	3,051	3/4	16	1,556	R34CFB2P12	N16	L16	32	2,022	R34DGB2P09	N21	L21
				TRANSVERSE, LONGITUDINAL BRACING REQUIREMENTS									
				4-Way Transverse, Longitudinal Brace Pattern (B30.3 & B33.3)									
150.0	10	3,295	3/4	27	2,048	R34DEB2P09	N21	L21					
175.0	10	3,417	3/4	22	1,947	R34DEB2P09	N20	L20					
200.0	10	3,416	3/4	17	1,719	R34DEB2P09	N18	L18					
225.0	10	3,404	3/4	13	1,479	R34CFB2P12	N15	L15					

1. TVL = DL + Fv + ($0.2S_{DS}$/1.4 x Wp). All Terms Are Working Loads. Based On Eccentric Loading, 65% Of Total Load Allocated Per Rod.
2. Reductions In Actual Installed Brace Spacing Will Result In An Equal Percentage Reduction In Brace Reaction. As An Option When This Occurs ISAT May Substitute An Alternate Anchorage From Tables D1 or D2 Which Meets or Exceeds The Lowered Brace Reaction.
3. At Max. 50 Degree Brace Inclination.
4. Min. 3,000 psi NWC. Any "N Series" Connection May Be Utilized Having A Numeric Designation Equal To Or Higher Than That Shown.
5. Min. 3,000 psi NWC or LWC. Any "L Series" Connection May Be Utilized Having A Numeric Designation Equal To Or Higher Than That Shown.
6. As An Alternate, Brace Anchorage Connections To Structure May Be Employed Using Any Detail From Structural Connections Section "D" Series Details Where Assembly Design Value Meets Or Exceeds Brace Reaction.
7. For Trade Specific Bracing Installation Notes, Refer To Page 9.1.
8. Utilize Any "G" Series Vertical Support Connection Having A Design Value Equal To Or Greater Than The Corresponding "Rod Total Vertical Load".

REVIEWED FOR CODE COMPLIANCE
HCAi
OPM-0403
BY: William Staehlin
DATE: 01-26-2021
CALIFORNIA BUILDING CODE, 2022

REGISTERED PROFESSIONAL ENGINEER
MARCIN WASAZNIK
S 6612
STRUCTURAL
STATE OF CALIFORNIA

ISAT
A Division of Tomarco Contractor Specialties
International Seismic Application Technology
14848 Northam Street, La Mirada, CA 90638
877-999-4728 (Toll Free) 714-523-0845 (Fax)
www.isatsb.com

Rev. 0
10/19/18
Page
C21-0.5-45

RIGID BRACING REQUIREMENTS [7]

ROD HUNG HVAC DUCT (Rectangular and 2-Rod Round) — **MAXIMUM SEISMIC DESIGN FORCE = 0.50 G's**

Requires Use of ISAT Seismic Brackets. Use of Any Non-ISAT Bracket Voids Engineering. — *2013 California Building Code Compliant*

Maximum Trapeze Load (lbs/lf)	Max. Vertical Support Spacing (ft.)	Rod [1] Total Vertical Load (lbs)	Min. [8] Vertical Support Rod Dia. (in.)	TRANSVERSE BRACING REQUIREMENTS					LONGITUDINAL BRACING REQUIREMENTS				
				Max. [2] Brace Spacing (ft.)	Brace [3] Reaction P (lbs)	Min. Brace Assembly E - Pages	Min. Brace Anchorage [6] Form Pour [4] Deck Page D1	Min. Brace Anchorage [6] Metal [5] Deck Page D2	Max. [2] Brace Spacing (ft.)	Brace [3] Reaction P (lbs)	Min. Brace Assembly E - Pages	Min. Brace Anchorage [6] Form Pour [4] Deck Page D1	Min. Brace Anchorage [6] Metal [5] Deck Page D2
				1-Way Transverse Brace Pattern (B30.0 & B33.0)					3-Way Transverse, Longitudinal Brace Pattern (B30.2 & B33.2)				
11.0	10	565	1/2	30	330	R12AAEM409	N4	L4	60	429	R12AAEM406	N5	L5
25.0	10	1,285	5/8	30	750	R58AAEM509	N8	L8	60	975	R58AAEM506	N10	L10
35.0	10	1,799	3/4	30	1,050	R34DGB1P06	N11	L11	60	1,365	R34DGB1S06	N14	L14
50.0	10	1,859	5/8	20	1,000	R58AAEM506	N10	L10	40	1,300	R58AAEM506	N13	L13
65.0	10	2,048	3/4	16	1,040	R34DGB1P06	N11	L11	32	1,352	R34DGB1S06	N14	L14
				TRANSVERSE, LONGITUDINAL BRACING REQUIREMENTS									
				4-Way Transverse, Longitudinal Brace Pattern (B30.3 & B33.3)									
75.0	10	2,150	3/4	28	1,365	R34DGB1S06	N14	L14					
100.0	10	2,369	3/4	21	1,365	R34DGB1S06	N14	L14					
100.0	10	2,369	3/4	21	1,365	R34DGB1S06	N14	L14					
125.0	10	2,606	3/4	17	1,381	R34DGB1S06	N14	L14					
150.0	10	2,808	3/4	14	1,365	R34DGB1S06	N14	L14					
175.0	10	3,027	3/4	12	1,365	R34DGB1S06	N14	L14					
200.0	10	3,175	3/4	10	1,300	R34DGB1S06	N13	L13					
225.0	10	3,413	3/4	9	1,316	R34DGB1S06	N14	L14					

1. TVL = DL + Fv + ($0.2S_{DS}$/1.4 x Wp). All Terms Are Working Loads. Based On Eccentric Loading, 65% Of Total Load Allocated Per Rod.
2. Reductions In Actual Installed Brace Spacing Will Result In An Equal Percentage Reduction In Brace Reaction. As An Option When This Occurs ISAT May Substitute An Alternate Anchorage From Tables D1 or D2 Which Meets or Exceeds The Lowered Brace Reaction.
3. At Max. 60 Degree Brace Inclination.
4. Min. 3,000 psi NWC. Any "N Series" Connection May Be Utilized Having A Numeric Designation Equal To Or Higher Than That Shown.
5. Min. 3,000 psi NWC or LWC. Any "L Series" Connection May Be Utilized Having A Numeric Designation Equal To Or Higher Than That Shown.
6. As An Alternate, Brace Anchorage Connections To Structure May Be Employed Using Any Detail From Structural Connections Section "D" Series Details Where Assembly Design Value Meets Or Exceeds Brace Reaction.
7. For Trade Specific Bracing Installation Notes, Refer To Page 9.1.
8. Utilize Any "G" Series Vertical Support Connection Having A Design Value Equal To Or Greater Than The Corresponding "Rod Total Vertical Load".

REVIEWED FOR CODE COMPLIANCE
OPM 0403
By: William Stachlin
DATE: 01/26/2024
CALIFORNIA BUILDING CODE 2022

REGISTERED PROFESSIONAL ENGINEER
MARCIN WASAZNIK
S-6612
STRUCTURAL
STATE OF CALIFORNIA

ISAT
A Division of Tomarco Contractor Specialties

International Seismic Application Technology
14848 Northam Street, La Mirada, CA 90638
877-999-4728 (Toll Free) 714-523-0845 (Fax)
www.isatsb.com

Rev. 0
08/03/18

RIGID BRACING REQUIREMENTS [7]

ROD HUNG HVAC DUCT (Rectangular and 2-Rod Round) — **MAXIMUM SEISMIC DESIGN FORCE = 0.75 G's**

Requires Use of ISAT Seismic Brackets. Use of Any Non-ISAT Bracket Voids Engineering. — *2013 California Building Code Compliant*

Maximum Trapeze Load (lbs/lf)	Max. Vertical Support Spacing (ft.)	Rod [1] Total Vertical Load (lbs)	Min. [8] Vertical Support Rod Dia. (in.)	TRANSVERSE BRACING REQUIREMENTS					LONGITUDINAL BRACING REQUIREMENTS				
				Max. [2] Brace Spacing (ft.)	Brace [3] Reaction P (lbs)	Min. Brace Assembly E - Pages	Min. Brace Anchorage [6] Form Pour [4] Deck Page D1	Min. Brace Anchorage [6] Metal [5] Deck Page D2	Max. [2] Brace Spacing (ft.)	Brace [3] Reaction P (lbs)	Min. Brace Assembly E - Pages	Min. Brace Anchorage [6] Form Pour [4] Deck Page D1	Min. Brace Anchorage [6] Metal [5] Deck Page D2
				1-Way Transverse Brace Pattern (B30.0 & B33.0)					3-Way Transverse, Longitudinal Brace Pattern (B30.2 & B33.2)				
11.0	10	331	3/8	30	286	R38AAEM306	N3	L3	60	372	R38AAEM406	N4	L4
25.0	10	752	1/2	30	650	R12AAEM406	N7	L7	60	844	R12AAEM506	N9	L9
35.0	10	1,053	1/2	30	909	R12AAEM506	N10	L10	60	1,182	R12AAEM506	N12	L12
50.0	10	1,291	1/2	24	1,039	R12AAEM506	N11	L11	48	1,351	R12AAEM506	N14	L14
65.0	10	1,401	1/2	18	1,013	R12AAEM506	N11	L11	36	1,317	R12AAEM506	N14	L14
75.0	10	1,510	5/8	16	1,039	R58AAEM506	N11	L11	32	1,351	R58AAEM506	N14	L14
100.0	10	1,730	5/8	12	1,039	R58AAEM506	N11	L11	24	1,351	R58AAEM506	N14	L14
125.0	10	1,985	5/8	10	1,083	R58AAEM506	N11	L11	20	1,407	R58AAEM506	N15	L15
				TRANSVERSE, LONGITUDINAL BRACING REQUIREMENTS									
				4-Way Transverse, Longitudinal Brace Pattern (B30.3 & B33.3)									
150.0	10	2,222	5/8	17	1,435	R58AAEM506	N15	L15					
175.0	10	2,281	5/8	12	1,182	R58AAEM506	N12	L12					
200.0	10	2,465	3/4	10	1,126	R34DGB1P06	N12	L12					
225.0	10	2,693	3/4	9	1,140	R34DGB1P06	N12	L12					

1. TVL = DL + Fv + ($0.2S_{DS}$/1.4 x Wp). All Terms Are Working Loads. Based On Eccentric Loading, 65% Of Total Load Allocated Per Rod.
2. Reductions In Actual Installed Brace Spacing Will Result In An Equal Percentage Reduction In Brace Reaction. As An Option When This Occurs ISAT May Substitute An Alternate Anchorage From Tables D1 or D2 Which Meets or Exceeds The Lowered Brace Reaction.
3. At Max. 30 Degree Brace Inclination.
4. Min. 3,000 psi NWC. Any "N Series" Connection May Be Utilized Having A Numeric Designation Equal To Or Higher Than That Shown.
5. Min. 3,000 psi NWC or LWC. Any "L Series" Connection May Be Utilized Having A Numeric Designation Equal To Or Higher Than That Shown.
6. As An Alternate, Brace Anchorage Connections To Structure May Be Employed Using Any Detail From Structural Connections Section "D" Series Details Where Assembly Design Value Meets Or Exceeds Brace Reaction.
7. For Trade Specific Bracing Installation Notes, Refer To Page 9.1.
8. Utilize Any "G" Series Vertical Support Connection Having A Design Value Equal To Or Greater Than The Corresponding "Rod Total Vertical Load".

REVIEWED FOR CODE COMPLIANCE
OPM-0403
BY: William Staehlin
DATE: 01/26/2024
CALIFORNIA BUILDING CODE 2022

REGISTERED PROFESSIONAL ENGINEER
MARCIN WASAZNIK
S 6612
STRUCTURAL
STATE OF CALIFORNIA

ISAT
A Division of Tomarco Contractor Specialties

International Seismic Application Technology
14848 Northam Street, La Mirada, CA 90638
877-999-4728 (Toll Free) 714-523-0845 (Fax)
www.isatsb.com

Rev. 0
08/03/18
Page
C21-0.75-30

RIGID BRACING REQUIREMENTS [7]

ROD HUNG HVAC DUCT (Rectangular and 2-Rod Round) — **MAXIMUM SEISMIC DESIGN FORCE = 0.75 G's**

Requires Use of ISAT Seismic Brackets. Use of Any Non-ISAT Bracket Voids Engineering. — *2013 California Building Code Compliant*

Maximum Trapeze Load (lbs/lf)	Max. Vertical Support Spacing (ft.)	Rod [1] Total Vertical Load (lbs)	Min. [8] Vertical Support Rod Dia. (in.)	TRANSVERSE BRACING REQUIREMENTS					LONGITUDINAL BRACING REQUIREMENTS				
				Max. [2] Brace Spacing (ft.)	Brace [3] Reaction P (lbs)	Min. Brace Assembly E - Pages	Min. Brace Anchorage [6] Form Pour [4] Deck Page D1	Min. Brace Anchorage [6] Metal [5] Deck Page D2	Max. [2] Brace Spacing (ft.)	Brace [3] Reaction P (lbs)	Min. Brace Assembly E - Pages	Min. Brace Anchorage [6] Form Pour [4] Deck Page D1	Min. Brace Anchorage [6] Metal [5] Deck Page D2
				1-Way Transverse Brace Pattern (B30.0 & B33.0)					3-Way Transverse, Longitudinal Brace Pattern (B30.2 & B33.2)				
11.0	10	580	1/2	30	385	R12AAEM406	N4	L4	60	501	R12AAEM406	N6	L6
25.0	10	1,319	5/8	30	875	R58AAEM506	N9	L9	60	1,138	R58AAEM506	N12	L12
35.0	10	1,846	3/4	30	1,225	R34CFB1P06	N13	L13	60	1,593	R34CFB2P12	N16	L16
50.0	10	2,345	3/4	26	1,517	R34CFB2P12	N16	L16	52	1,972	R34DGB2P09	N20	L20
65.0	10	2,476	3/4	20	1,517	R34CFB2P12	N16	L16	40	1,972	R34DGB2P09	N20	L20
75.0	10	2,417	3/4	16	1,400	R34CFB1S06	N15	L15	32	1,820	R34DGB2P09	N19	L19
100.0	10	2,637	3/4	12	1,400	R34CFB1S06	N15	L15	24	1,820	R34DGB2P09	N19	L19
125.0	10	2,929	3/4	10	1,458	R34CFB2P12	N15	L15	20	1,896	R34DGB2P09	N19	L19
				TRANSVERSE, LONGITUDINAL BRACING REQUIREMENTS									
				4-Way Transverse, Longitudinal Brace Pattern (B30.3 & B33.3)									
150.0	10	3,295	3/4	18	2,048	R34DEB2P09	N21	L21					
175.0	10	3,460	3/4	15	1,991	R34DEB2P09	N20	L20					
200.0	10	3,368	3/4	11	1,669	R34DEB2P09	N17	L17					
225.0	10	3,459	3/4	9	1,536	R34CFB2P12	N16	L16					

1. TVL = DL + Fv + ($0.2S_{DS}$/1.4 x Wp). All Terms Are Working Loads. Based On Eccentric Loading, 65% Of Total Load Allocated Per Rod.
2. Reductions In Actual Installed Brace Spacing Will Result In An Equal Percentage Reduction In Brace Reaction. As An Option When This Occurs ISAT May Substitute An Alternate Anchorage From Tables D1 or D2 Which Meets or Exceeds The Lowered Brace Reaction.
3. At Max. 50 Degree Brace Inclination.
4. Min. 3,000 psi NWC. Any "N Series" Connection May Be Utilized Having A Numeric Designation Equal To Or Higher Than That Shown.
5. Min. 3,000 psi NWC or LWC. Any "L Series" Connection May Be Utilized Having A Numeric Designation Equal To Or Higher Than That Shown.
6. As An Alternate, Brace Anchorage Connections To Structure May Be Employed Using Any Detail From Structural Connections Section "D" Series Details Where Assembly Design Value Meets Or Exceeds Brace Reaction.
7. For Trade Specific Bracing Installation Notes, Refer To Page 9.1.
8. Utilize Any "G" Series Vertical Support Connection Having A Design Value Equal To Or Greater Than The Corresponding "Rod Total Vertical Load".

REVIEWED FOR CODE COMPLIANCE
OPM-0403
BY: William Staehlin
DATE: 01/26/2024
CALIFORNIA BUILDING CODE 2022

REGISTERED PROFESSIONAL ENGINEER
MARCIN WASAZNIK
S 6612
STRUCTURAL
STATE OF CALIFORNIA

ISAT
A Division of Tomarco Contractor Specialties

International Seismic Application Technology
14848 Northam Street, La Mirada, CA 90638
877-999-4728 (Toll Free) 714-523-0845 (Fax)
www.isatsb.com

Rev. 0
08/03/18
Page
C21-0.75-45

RIGID BRACING REQUIREMENTS [7]

ROD HUNG HVAC DUCT (Rectangular and 2-Rod Round) — **MAXIMUM SEISMIC DESIGN FORCE = 0.75 G's**

Requires Use of ISAT Seismic Brackets. Use of Any Non-ISAT Bracket Voids Engineering. — *2013 California Building Code Compliant*

Maximum Trapeze Load (lbs/lf)	Max. Vertical Support Spacing (ft.)	Rod [1] Total Vertical Load (lbs)	Min. [8] Vertical Support Rod Dia. (in.)	TRANSVERSE BRACING REQUIREMENTS					LONGITUDINAL BRACING REQUIREMENTS				
				Max. [2] Brace Spacing (ft.)	Brace [3] Reaction P (lbs)	Min. Brace Assembly E - Pages	Min. Brace Anchorage [6] Form Pour [4] Deck Page D1	Min. Brace Anchorage [6] Metal [5] Deck Page D2	Max. [2] Brace Spacing (ft.)	Brace [3] Reaction P (lbs)	Min. Brace Assembly E - Pages	Min. Brace Anchorage [6] Form Pour [4] Deck Page D1	Min. Brace Anchorage [6] Metal [5] Deck Page D2
				1-Way Transverse Brace Pattern (B30.0 & B33.0)					3-Way Transverse, Longitudinal Brace Pattern (B30.2 & B33.2)				
11.0	10	800	1/2	30	495	R12AAEM406	N5	L5	60	644	R12AAEM406	N7	L7
25.0	10	1,711	3/4	28	1,050	R34DGB1P06	N11	L11	56	1,365	R34DGB1S06	N14	L14
35.0	10	1,799	3/4	20	1,050	R34DGB1P06	N11	L11	40	1,365	R34DGB1S06	N14	L14
50.0	10	1,930	3/4	14	1,050	R34DGB1P06	N11	L11	28	1,365	R34DGB1S06	N14	L14
65.0	10	1,955	5/8	10	975	R58AAEM506	N10	L10	20	1,268	R58AAEM506	N13	L13
				TRANSVERSE, LONGITUDINAL BRACING REQUIREMENTS									
				4-Way Transverse, Longitudinal Brace Pattern (B30.3 & B33.3)									
75.0	10	2,176	3/4	19	1,389	R34DGB1S06	N14	L14					
100.0	10	2,369	3/4	14	1,365	R34DGB1S06	N14	L14					
100.0	10	2,369	3/4	14	1,365	R34DGB1S06	N14	L14					
125.0	10	2,562	3/4	11	1,341	R34DGB1S06	N14	L14					
150.0	10	2,754	3/4	9	1,316	R34DGB1S06	N14	L14					
175.0	10	3,027	3/4	8	1,365	R34DGB1S06	N14	L14					
200.0	10	3,246	3/4	7	1,365	R34DGB1S06	N14	L14					
225.0	10	3,413	3/4	6	1,316	R34DGB1S06	N14	L14					

1. TVL = DL + Fv + ($0.2S_{DS}$/1.4 x Wp). All Terms Are Working Loads. Based On Eccentric Loading, 65% Of Total Load Allocated Per Rod.
2. Reductions In Actual Installed Brace Spacing Will Result In An Equal Percentage Reduction In Brace Reaction. As An Option When This Occurs ISAT May Substitute An Alternate Anchorage From Tables D1 or D2 Which Meets or Exceeds The Lowered Brace Reaction.
3. At Max. 60 Degree Brace Inclination.
4. Min. 3,000 psi NWC. Any "N Series" Connection May Be Utilized Having A Numeric Designation Equal To Or Higher Than That Shown.
5. Min. 3,000 psi NWC or LWC. Any "L Series" Connection May Be Utilized Having A Numeric Designation Equal To Or Higher Than That Shown.
6. As An Alternate, Brace Anchorage Connections To Structure May Be Employed Using Any Detail From Structural Connections Section "D" Series Details Where Assembly Design Value Meets Or Exceeds Brace Reaction.
7. For Trade Specific Bracing Installation Notes, Refer To Page 9.1.
8. Utilize Any "G" Series Vertical Support Connection Having A Design Value Equal To Or Greater Than The Corresponding "Rod Total Vertical Load".

REVIEWED FOR CODE COMPLIANCE
OPM 0403
By: William Stachlin
DATE: 01/26/2024
CALIFORNIA BUILDING CODE 2022

REGISTERED PROFESSIONAL ENGINEER
MARCIN WASAZNIK
S 6612
STRUCTURAL
STATE OF CALIFORNIA

ISAT
A Division of Tomarco Contractor Specialties

International Seismic Application Technology
14848 Northam Street, La Mirada, CA 90638
877-999-4728 (Toll Free) 714-523-0845 (Fax)
www.isatsb.com

Rev. 0
08/03/18
Page
C21-0.75-60

RIGID BRACING REQUIREMENTS [7]

ROD HUNG HVAC DUCT (Rectangular and 2-Rod Round) — **MAXIMUM SEISMIC DESIGN FORCE = 1.00 G's**

Requires Use of ISAT Seismic Brackets. Use of Any Non-ISAT Bracket Voids Engineering. — *2013 California Building Code Compliant*

Maximum Trapeze Load (lbs/lf)	Max. Vertical Support Spacing (ft.)	Rod [1] Total Vertical Load (lbs)	Min. [8] Vertical Support Rod Dia. (in.)	TRANSVERSE BRACING REQUIREMENTS					LONGITUDINAL BRACING REQUIREMENTS				
				Max. [2] Brace Spacing (ft.)	Brace [3] Reaction P (lbs)	Min. Brace Assembly E - Pages	Min. Brace Anchorage [6] Form Pour [4] Deck Page D1	Min. Brace Anchorage [6] Metal [5] Deck Page D2	Max. [2] Brace Spacing (ft.)	Brace [3] Reaction P (lbs)	Min. Brace Assembly E - Pages	Min. Brace Anchorage [6] Form Pour [4] Deck Page D1	Min. Brace Anchorage [6] Metal [5] Deck Page D2
				1-Way Transverse Brace Pattern (B30.0 & B33.0)					3-Way Transverse, Longitudinal Brace Pattern (B30.2 & B33.2)				
11.0	10	409	3/8	30	381	R38AAEM406	N4	L4	60	495	R38AAEM406	N5	L5
25.0	10	930	1/2	30	866	R12AAEM506	N9	L9	60	1,126	R12AAEM506	N12	L12
35.0	10	1,169	1/2	26	1,051	R12AAEM506	N11	L11	52	1,366	R12AAEM506	N14	L14
50.0	10	1,291	1/2	18	1,039	R12AAEM506	N11	L11	36	1,351	R12AAEM506	N14	L14
65.0	10	1,432	1/2	14	1,051	R12AAEM506	N11	L11	28	1,366	R12AAEM506	N14	L14
75.0	10	1,510	5/8	12	1,039	R58AAEM506	N11	L11	24	1,351	R58AAEM506	N14	L14
				TRANSVERSE, LONGITUDINAL BRACING REQUIREMENTS									
				4-Way Transverse, Longitudinal Brace Pattern (B30.3 & B33.3)									
100.0	10	1,777	5/8	19	1,426	R58AAEM506	N15	L15					
125.0	10	1,985	5/8	15	1,407	R58AAEM506	N15	L15					
150.0	10	2,168	5/8	12	1,351	R58AAEM506	N14	L14					
175.0	10	2,281	5/8	9	1,182	R58AAEM506	N12	L12					
200.0	10	2,418	3/4	7	1,051	R34DGB1P06	N11	L11					
225.0	10	2,720	3/4	7	1,182	R34DGB1P06	N12	L12					

1. TVL = DL + Fv + ($0.2S_{DS}$/1.4 x Wp). All Terms Are Working Loads. Based On Eccentric Loading, 65% Of Total Load Allocated Per Rod.
2. Reductions In Actual Installed Brace Spacing Will Result In An Equal Percentage Reduction In Brace Reaction. As An Option When This Occurs ISAT May Substitute An Alternate Anchorage From Tables D1 or D2 Which Meets or Exceeds The Lowered Brace Reaction.
3. At Max. 30 Degree Brace Inclination.
4. Min. 3,000 psi NWC. Any "N Series" Connection May Be Utilized Having A Numeric Designation Equal To Or Higher Than That Shown.
5. Min. 3,000 psi NWC or LWC. Any "L Series" Connection May Be Utilized Having A Numeric Designation Equal To Or Higher Than That Shown.
6. As An Alternate, Brace Anchorage Connections To Structure May Be Employed Using Any Detail From Structural Connections Section "D" Series Details Where Assembly Design Value Meets Or Exceeds Brace Reaction.
7. For Trade Specific Bracing Installation Notes, Refer To Page 9.1.
8. Utilize Any "G" Series Vertical Support Connection Having A Design Value Equal To Or Greater Than The Corresponding "Rod Total Vertical Load".

REVIEWED FOR CODE COMPLIANCE By: William Staehlin DATE: 01/26/2024 CALIFORNIA BUILDING CODE 2022

REGISTERED PROFESSIONAL ENGINEER MARCIN WASAZNIK S 6612 STRUCTURAL STATE OF CALIFORNIA

ISAT
A Division of Tomarco Contractor Specialties
International Seismic Application Technology
14848 Northam Street, La Mirada, CA 90638
877-999-4728 (Toll Free) 714-523-0845 (Fax)
www.isatsb.com

Rev. 0
08/03/18
Page
C21-1-30

RIGID BRACING REQUIREMENTS [7]

ROD HUNG HVAC DUCT (Rectangular and 2-Rod Round) — **MAXIMUM SEISMIC DESIGN FORCE = 1.00 G's**

Requires Use of ISAT Seismic Brackets. Use of Any Non-ISAT Bracket Voids Engineering. — *2013 California Building Code Compliant*

Maximum Trapeze Load (lbs/lf)	Max. Vertical Support Spacing (ft.)	Rod [1] Total Vertical Load (lbs)	Min. [8] Vertical Support Rod Dia. (in.)	TRANSVERSE BRACING REQUIREMENTS					LONGITUDINAL BRACING REQUIREMENTS				
				Max. [2] Brace Spacing (ft.)	Brace [3] Reaction P (lbs)	Min. Brace Assembly E - Pages	Min. Brace Anchorage [6] Form Pour [4] Deck Page D1	Min. Brace Anchorage [6] Metal [5] Deck Page D2	Max. [2] Brace Spacing (ft.)	Brace [3] Reaction P (lbs)	Min. Brace Assembly E - Pages	Min. Brace Anchorage [6] Form Pour [4] Deck Page D1	Min. Brace Anchorage [6] Metal [5] Deck Page D2
				1-Way Transverse Brace Pattern (B30.0 & B33.0)					3-Way Transverse, Longitudinal Brace Pattern (B30.2 & B33.2)				
11.0	10	742	1/2	30	513	R12AAEM406	N6	L6	60	667	R12AAEM509	N7	L7
25.0	10	1,685	3/4	30	1,167	R34CFB1P06	N12	L12	60	1,517	R34CFB2P12	N16	L16
35.0	10	2,223	3/4	28	1,525	R34CFB2P12	N16	L16	56	1,982	R34DGB2P09	N20	L20
50.0	10	2,198	3/4	18	1,400	R34CFB1S06	N15	L15	36	1,820	R34DGB2P09	N19	L19
65.0	10	2,349	3/4	14	1,416	R34CFB1S06	N15	L15	28	1,840	R34DGB2P09	N19	L19
75.0	10	2,417	3/4	12	1,400	R34CFB1S06	N15	L15	24	1,820	R34DGB2P09	N19	L19
100.0	10	2,832	3/4	10	1,556	R34CFB2P12	N16	L16	20	2,022	R34DGB2P09	N21	L21
				TRANSVERSE, LONGITUDINAL BRACING REQUIREMENTS									
				4-Way Transverse, Longitudinal Brace Pattern (B30.3 & B33.3)									
125.0	10	3,051	3/4	16	2,022	R34DEB2P09	N21	L21					
150.0	10	3,222	3/4	13	1,972	R34DEB2P09	N20	L20					
175.0	10	3,417	3/4	11	1,947	R34DEB2P09	N20	L20					

1. TVL = DL + Fv + ($0.2S_{DS}$/1.4 x Wp). All Terms Are Working Loads. Based On Eccentric Loading, 65% Of Total Load Allocated Per Rod.
2. Reductions In Actual Installed Brace Spacing Will Result In An Equal Percentage Reduction In Brace Reaction. As An Option When This Occurs ISAT May Substitute An Alternate Anchorage From Tables D1 or D2 Which Meets or Exceeds The Lowered Brace Reaction.
3. At Max. 50 Degree Brace Inclination.
4. Min. 3,000 psi NWC. Any "N Series" Connection May Be Utilized Having A Numeric Designation Equal To Or Higher Than That Shown.
5. Min. 3,000 psi NWC or LWC. Any "L Series" Connection May Be Utilized Having A Numeric Designation Equal To Or Higher Than That Shown.
6. As An Alternate, Brace Anchorage Connections To Structure May Be Employed Using Any Detail From Structural Connections Section "D" Series Details Where Assembly Design Value Meets Or Exceeds Brace Reaction.
7. For Trade Specific Bracing Installation Notes, Refer To Page 9.1.
8. Utilize Any "G" Series Vertical Support Connection Having A Design Value Equal To Or Greater Than The Corresponding "Rod Total Vertical Load".

REVIEWED FOR CODE COMPLIANCE
OPM-0403
By William Staehlin
DATE: 01-26-2024
CALIFORNIA BUILDING CODE

REGISTERED PROFESSIONAL ENGINEER
MARCIN WASAZNIK
S 6612
STRUCTURAL
STATE OF CALIFORNIA

ISAT
A Division of Tomarco Contractor Specialties
International Seismic Application Technology
14848 Northam Street, La Mirada, CA 90638
877-999-4728 (Toll Free) 714-523-0845 (Fax)
www.isatsb.com

Rev. 0
10/19/18
Page
C21-1-45

RIGID BRACING REQUIREMENTS [7]

ROD HUNG HVAC DUCT (Rectangular and 2-Rod Round) — **MAXIMUM SEISMIC DESIGN FORCE = 1.00 G's**

Requires Use of ISAT Seismic Brackets. Use of Any Non-ISAT Bracket Voids Engineering. — *2013 California Building Code Compliant*

Maximum Trapeze Load (lbs/lf)	Max. Vertical Support Spacing (ft.)	Rod [1] Total Vertical Load (lbs)	Min. [8] Vertical Support Rod Dia. (in.)	TRANSVERSE BRACING REQUIREMENTS					LONGITUDINAL BRACING REQUIREMENTS				
				Max. [2] Brace Spacing (ft.)	Brace [3] Reaction P (lbs)	Min. Brace Assembly E - Pages	Min. Brace Anchorage [6] Form Pour [4] Deck Page D1	Min. Brace Anchorage [6] Metal [5] Deck Page D2	Max. [2] Brace Spacing (ft.)	Brace [3] Reaction P (lbs)	Min. Brace Assembly E - Pages	Min. Brace Anchorage [6] Form Pour [4] Deck Page D1	Min. Brace Anchorage [6] Metal [5] Deck Page D2
				1-Way Transverse Brace Pattern (B30.0 & B33.0)					3-Way Transverse, Longitudinal Brace Pattern (B30.2 & B33.2)				
11.0	10	1,034	1/2	30	660	R12AAEM406	N7	L7	60	858	R12AAEM506	N9	L9
25.0	10	1,640	3/4	20	1,000	R34DGB1P06	N10	L10	40	1,300	R34DGB1S06	N13	L13
35.0	10	1,699	5/8	14	980	R58AAEM506	N10	L10	28	1,274	R58AAEM506	N13	L13
50.0	10	1,859	5/8	10	1,000	R58AAEM506	N10	L10	20	1,300	R58AAEM506	N13	L13
				TRANSVERSE, LONGITUDINAL BRACING REQUIREMENTS									
				4-Way Transverse, Longitudinal Brace Pattern (B30.3 & B33.3)									
65.0	10	2,048	3/4	16	1,352	R34DGB1S06	N14	L14					
75.0	10	2,150	3/4	14	1,365	R34DGB1S06	N14	L14					
100.0	10	2,298	5/8	10	1,300	R58AAEM506	N13	L13					
100.0	10	2,298	5/8	10	1,300	R58AAEM506	N13	L13					
125.0	10	2,517	3/4	8	1,300	R34DGB1S06	N13	L13					
150.0	10	2,808	3/4	7	1,365	R34DGB1S06	N14	L14					
175.0	10	3,027	3/4	6	1,365	R34DGB1S06	N14	L14					
200.0	10	3,175	3/4	5	1,300	R34DGB1S06	N13	L13					
225.0	10	3,253	3/4	4	1,170	R34DGB1P06	N12	L12					

1. TVL = DL + Fv + ($0.2S_{DS}$/1.4 x Wp). All Terms Are Working Loads. Based On Eccentric Loading, 65% Of Total Load Allocated Per Rod.
2. Reductions In Actual Installed Brace Spacing Will Result In An Equal Percentage Reduction In Brace Reaction. As An Option When This Occurs ISAT May Substitute An Alternate Anchorage From Tables D1 or D2 Which Meets or Exceeds The Lowered Brace Reaction.
3. At Max. 60 Degree Brace Inclination.
4. Min. 3,000 psi NWC. Any "N Series" Connection May Be Utilized Having A Numeric Designation Equal To Or Higher Than That Shown.
5. Min. 3,000 psi NWC or LWC. Any "L Series" Connection May Be Utilized Having A Numeric Designation Equal To Or Higher Than That Shown.
6. As An Alternate, Brace Anchorage Connections To Structure May Be Employed Using Any Detail From Structural Connections Section "D" Series Details Where Assembly Design Value Meets Or Exceeds Brace Reaction.
7. For Trade Specific Bracing Installation Notes, Refer To Page 9.1.
8. Utilize Any "G" Series Vertical Support Connection Having A Design Value Equal To Or Greater Than The Corresponding "Rod Total Vertical Load".

REVIEWED FOR CODE COMPLIANCE
OPM 8403
By: William Stachlin
DATE: 01/26/2024
CALIFORNIA BUILDING CODE 2022

REGISTERED PROFESSIONAL ENGINEER
MARCIN WASAZNIK
S 6612
STRUCTURAL
STATE OF CALIFORNIA

ISAT
A Division of Tomarco Contractor Specialties

International Seismic Application Technology
14848 Northam Street, La Mirada, CA 90638
877-999-4728 (Toll Free) 714-523-0845 (Fax)
www.isatsb.com

Rev. 0
08/03/18

CABLE BRACING REQUIREMENTS [7]:

ROD HUNG HVAC DUCT (RECTANGULAR and 2-ROD ROUND) — **MAXIMUM SEISMIC DESIGN FORCE = 0.25 G's**

Requires Use of ISAT Seismic Brackets. Use of Any Non-ISAT Bracket Voids Engineering. — *2013 California Building Code Compliant*

Maximum Trapeze Load (lbs/lf)	Max. Vertical Support Spacing (ft.)	Rod [1] Total Vertical Load (lbs)	Min. [8] Vertical Support Rod Dia. (in.)	TRANSVERSE BRACING REQUIREMENTS					LONGITUDINAL BRACING REQUIREMENTS				
				Max. [2] Brace Spacing (ft.)	Brace [3] Reaction P (lbs)	Min. Brace Assembly E - Pages	Min. Brace Anchorage [6] Form Pour [4] Deck Page D1	Min. Brace Anchorage [6] Metal [5] Deck Page D2	Max. [2] Brace Spacing (ft.)	Brace [3] Reaction P (lbs)	Min. Brace Assembly E - Pages	Min. Brace Anchorage [6] Form Pour [4] Deck Page D1	Min. Brace Anchorage [6] Metal [5] Deck Page D2
				2-Way Transverse Brace Pattern (B31.0, B34.0)					6-Way Transverse, Longitudinal Brace Pattern (B31.1, B34.1)				
11.0	10	97	3/8	30	95	C38AA04WS	N1	L1	60	124	C38AA04WS	N2	L2
25.0	10	219	1/2	30	217	C12AA04WS	N3	L3	60	281	C12AA04WS	N3	L3
35.0	10	307	1/2	30	303	C12AA04WS	N4	L4	60	394	C12AA04WS	N4	L4
50.0	10	439	1/2	30	433	C12AA04WS	N5	L5	60	563	C12AA04WS	N6	L6
65.0	10	570	1/2	30	563	C12AA04WS	N6	L6	60	732	C12AA06WS	N8	L8
75.0	10	658	1/2	30	650	C12AA04WS	N7	L7	60	844	C12AA06WS	N9	L9
100.0	10	878	1/2	30	866	C12AA06WS	N9	L9	60	1,126	C12AA06WS	N12	L12
125.0	10	1,097	1/2	30	1,083	C12AA06WS	N11	L11	60	1,407	C12AA06WS	N15	L15
150.0	10	1,316	1/2	25	1,083	C12AA06WS	N11	L11	50	1,407	C12AA06WS	N15	L15

1. TVL = DL + Fv + ($0.2S_{DS}$/1.4 x Wp). All Terms Are Working Loads. Based On Eccentric Loading, 65% Of Total Load Allocated Per Rod.
2. Reductions In Actual Installed Brace Spacing Will Result In An Equal Percentage Reduction In Brace Reaction. As An Option When This Occurs ISAT May Substitute An Alternate Anchorage From Tables D1 or D2 Which Meets or Exceeds The Lowered Brace Reaction.
3. At Max. 30 Degree Brace Inclination.
4. Min. 3,000 psi NWC. Any "N Series" Connection May Be Utilized Having A Numeric Designation Equal To Or Higher Than That Shown.
5. Min. 3,000 psi NWC or LWC. Any "L Series" Connection May Be Utilized Having A Numeric Designation Equal To Or Higher Than That Shown.
6. As An Alternate, Brace Anchorage Connections To Structure May Be Employed Using Any Detail From Structural Connections Section "D" Series Details Where Assembly Design Value Meets Or Exceeds Brace Reaction.
7. For Trade Specific Bracing Installation Notes, Refer To Page 9.1.
8. Utilize Any "G" Series Vertical Support Connection Having A Design Value Equal To Or Greater Than The Corresponding "Rod Total Vertical Load".

REVIEWED FOR CODE COMPLIANCE
OPM-0403
BY: William Staehlin
DATE: 01-26-2024
CALIFORNIA BUILDING CODE, 2019

REGISTERED PROFESSIONAL ENGINEER
MARCIN WASAZNIK
S 6612
STRUCTURAL
STATE OF CALIFORNIA

ISAT
A Division of Tomarco Contractor Specialties
International Seismic Application Technology
14848 Northam Street, La Mirada, CA 90638
877-999-4728 (Toll Free) 714-523-0845 (Fax)
www.isatsb.com

Rev. 0
08/03/2018
Page
C22-0.25-30

CABLE BRACING REQUIREMENTS [7]:

ROD HUNG HVAC DUCT (RECTANGULAR and 2-ROD ROUND) — **MAXIMUM SEISMIC DESIGN FORCE = 0.25 G's**

Requires Use of ISAT Seismic Brackets. Use of Any Non-ISAT Bracket Voids Engineering. — *2013 California Building Code Compliant*

Maximum Trapeze Load (lbs/lf)	Max. Vertical Support Spacing (ft.)	Rod [1] Total Vertical Load (lbs)	Min. [8] Vertical Support Rod Dia. (in.)	TRANSVERSE BRACING REQUIREMENTS					LONGITUDINAL BRACING REQUIREMENTS				
				Max. [2] Brace Spacing (ft.)	Brace [3] Reaction P (lbs)	Min. Brace Assembly E - Pages	Min. Brace Anchorage [6] Form Pour [4] Deck Page D1	Min. Brace Anchorage [6] Metal [5] Deck Page D2	Max. [2] Brace Spacing (ft.)	Brace [3] Reaction P (lbs)	Min. Brace Assembly E - Pages	Min. Brace Anchorage [6] Form Pour [4] Deck Page D1	Min. Brace Anchorage [6] Metal [5] Deck Page D2
				2-Way Transverse Brace Pattern (B31.0, B34.0)					6-Way Transverse, Longitudinal Brace Pattern (B31.1, B34.1)				
11.0	10	97	3/8	30	128	C38AA04WS	N2	L2	60	167	C38AA04WS	N2	L2
25.0	10	219	1/2	30	292	C12AA04WS	N3	L3	60	379	C12AA04WS	N4	L4
35.0	10	307	1/2	30	408	C12AA04WS	N5	L5	60	531	C12AA04WS	N6	L6
50.0	10	439	1/2	30	583	C12AA04WS	N6	L6	60	758	C12AA06WS	N8	L8
65.0	10	570	1/2	30	758	C12AA06WS	N8	L8	60	986	C12AA06WS	N10	L10
75.0	10	658	5/8	30	875	C58AA06WS	N9	L9	60	1,138	C58AA06WS	N12	L12
100.0	10	878	5/8	30	1,167	C58AA06WS	N12	L12	60	1,517	C58DG06TS	N16	L16
125.0	10	1,097	5/8	24	1,167	C58AA06WS	N12	L12	48	1,517	C58DG06TS	N16	L16
150.0	10	1,316	5/8	20	1,167	C58AA06WS	N12	L12	40	1,517	C58DG06TS	N16	L16

1. TVL = DL + Fv + ($0.2S_{DS}$/1.4 x Wp). All Terms Are Working Loads. Based On Eccentric Loading, 65% Of Total Load Allocated Per Rod.
2. Reductions In Actual Installed Brace Spacing Will Result In An Equal Percentage Reduction In Brace Reaction. As An Option When This Occurs ISAT May Substitute An Alternate Anchorage From Tables D1 or D2 Which Meets or Exceeds The Lowered Brace Reaction.
3. At Max. 50 Degree Brace Inclination.
4. Min. 3,000 psi NWC. Any "N Series" Connection May Be Utilized Having A Numeric Designation Equal To Or Higher Than That Shown.
5. Min. 3,000 psi NWC or LWC. Any "L Series" Connection May Be Utilized Having A Numeric Designation Equal To Or Higher Than That Shown.
6. As An Alternate, Brace Anchorage Connections To Structure May Be Employed Using Any Detail From Structural Connections Section "D" Series Details Where Assembly Design Value Meets Or Exceeds Brace Reaction.
7. For Trade Specific Bracing Installation Notes, Refer To Page 9.1.
8. Utilize Any "G" Series Vertical Support Connection Having A Design Value Equal To Or Greater Than The Corresponding "Rod Total Vertical Load".

REVIEWED FOR CODE COMPLIANCE
OPM-0403
BY: William Staehlin
DATE: 01-26-2024
CALIFORNIA BUILDING CODE, 2019

REGISTERED PROFESSIONAL ENGINEER
MARCIN WASAZNIK
S 6612
STRUCTURAL
STATE OF CALIFORNIA

ISAT
A Division of Tomarco Contractor Specialties
International Seismic Application Technology
14848 Northam Street, La Mirada, CA 90638
877-999-4728 (Toll Free) 714-523-0845 (Fax)
www.isatsb.com

Rev. 0
08/03/2018
Page
C22-0.25-45

CABLE BRACING REQUIREMENTS [7]:

ROD HUNG HVAC DUCT (RECTANGULAR and 2-ROD ROUND) — **MAXIMUM SEISMIC DESIGN FORCE = 0.25 G's**

Requires Use of ISAT Seismic Brackets. Use of Any Non-ISAT Bracket Voids Engineering. — *2013 California Building Code Compliant*

Maximum Trapeze Load (lbs/lf)	Max. Vertical Support Spacing (ft.)	Rod [1] Total Vertical Load (lbs)	Min. [8] Vertical Support Rod Dia. (in.)	TRANSVERSE BRACING REQUIREMENTS					LONGITUDINAL BRACING REQUIREMENTS				
				Max. [2] Brace Spacing (ft.)	Brace [3] Reaction P (lbs)	Min. Brace Assembly E - Pages	Min. Brace Anchorage [6] Form Pour [4] Deck Page D1	Min. Brace Anchorage [6] Metal [5] Deck Page D2	Max. [2] Brace Spacing (ft.)	Brace [3] Reaction P (lbs)	Min. Brace Assembly E - Pages	Min. Brace Anchorage [6] Form Pour [4] Deck Page D1	Min. Brace Anchorage [6] Metal [5] Deck Page D2
				2-Way Transverse Brace Pattern (B31.0, B34.0)					6-Way Transverse, Longitudinal Brace Pattern (B31.1, B34.1)				
11.0	10	97	3/8	30	165	C38AA04WS	N2	L2	60	215	C38AA04WS	N3	L3
25.0	10	219	1/2	30	375	C12AA04WS	N4	L4	60	488	C12AA04WS	N5	L5
35.0	10	307	1/2	30	525	C12AA04WS	N6	L6	60	683	C12AA06WS	N7	L7
50.0	10	439	5/8	30	750	C58AA06WS	N8	L8	60	975	C58AA06WS	N10	L10
65.0	10	570	5/8	30	975	C58AA06WS	N10	L10	60	1,268	C58AA06WS	N13	L13
75.0	10	658	3/4	30	1,125	C34DG06WS	N12	L12	60	1,463	C34DG06WS	N15	L15
100.0	10	878	3/4	22	1,100	C34DG06WS	N11	L11	44	1,430	C34DG06WS	N15	L15
125.0	10	1,097	3/4	18	1,125	C34DG06WS	N12	L12	36	1,463	C34DG06WS	N15	L15
150.0	10	1,316	3/4	15	1,125	C34DG06WS	N12	L12	30	1,463	C34DG06WS	N15	L15

1. TVL = DL + Fv + ($0.2S_{DS}$/1.4 x Wp). All Terms Are Working Loads. Based On Eccentric Loading, 65% Of Total Load Allocated Per Rod.
2. Reductions In Actual Installed Brace Spacing Will Result In An Equal Percentage Reduction In Brace Reaction. As An Option When This Occurs ISAT May Substitute An Alternate Anchorage From Tables D1 or D2 Which Meets or Exceeds The Lowered Brace Reaction.
3. At Max. 60 Degree Brace Inclination.
4. Min. 3,000 psi NWC. Any "N Series" Connection May Be Utilized Having A Numeric Designation Equal To Or Higher Than That Shown.
5. Min. 3,000 psi NWC or LWC. Any "L Series" Connection May Be Utilized Having A Numeric Designation Equal To Or Higher Than That Shown.
6. As An Alternate, Brace Anchorage Connections To Structure May Be Employed Using Any Detail From Structural Connections Section "D" Series Details Where Assembly Design Value Meets Or Exceeds Brace Reaction.
7. For Trade Specific Bracing Installation Notes, Refer To Page 9.1.
8. Utilize Any "G" Series Vertical Support Connection Having A Design Value Equal To Or Greater Than The Corresponding "Rod Total Vertical Load".

REVIEWED FOR CODE COMPLIANCE
OPM-0403
BY: William Staehlin
DATE: 01-26-2024
CALIFORNIA BUILDING CODE, 2019

REGISTERED PROFESSIONAL ENGINEER MARCIN WASAZNIK S-6612 STRUCTURAL STATE OF CALIFORNIA

ISAT
A Division of Tomarco Contractor Specialties
International Seismic Application Technology
14848 Northam Street, La Mirada, CA 90638
877-999-4728 (Toll Free) 714-523-0845 (Fax)
www.isatsb.com

Rev. 1
03/12/19
Page
C22-0.25-60

CABLE BRACING REQUIREMENTS [7]:

ROD HUNG HVAC DUCT (RECTANGULAR and 2-ROD ROUND) — **MAXIMUM SEISMIC DESIGN FORCE = 0.50 G's**

Requires Use of ISAT Seismic Brackets. Use of Any Non-ISAT Bracket Voids Engineering. — *2013 California Building Code Compliant*

Maximum Trapeze Load (lbs/lf)	Max. Vertical Support Spacing (ft.)	Rod [1] Total Vertical Load (lbs)	Min. [8] Vertical Support Rod Dia. (in.)	TRANSVERSE BRACING REQUIREMENTS					LONGITUDINAL BRACING REQUIREMENTS				
				Max. [2] Brace Spacing (ft.)	Brace [3] Reaction P (lbs)	Min. Brace Assembly E - Pages	Min. Brace Anchorage [6] Form Pour [4] Deck Page D1	Min. Brace Anchorage [6] Metal [5] Deck Page D2	Max. [2] Brace Spacing (ft.)	Brace [3] Reaction P (lbs)	Min. Brace Assembly E - Pages	Min. Brace Anchorage [6] Form Pour [4] Deck Page D1	Min. Brace Anchorage [6] Metal [5] Deck Page D2
				2-Way Transverse Brace Pattern (B31.0, B34.0)					6-Way Transverse, Longitudinal Brace Pattern (B31.1, B34.1)				
11.0	10	97	3/8	30	191	C38AA04WS	N2	L2	60	248	C38AA04WS	N3	L3
25.0	10	219	1/2	30	433	C12AA04WS	N5	L5	60	563	C12AA04WS	N6	L6
35.0	10	307	1/2	30	606	C12AA04WS	N7	L7	60	788	C12AA06WS	N8	L8
50.0	10	439	1/2	30	866	C12AA06WS	N9	L9	60	1,126	C12AA06WS	N12	L12
65.0	10	570	1/2	29	1,088	C12AA06WS	N11	L11	58	1,415	C12AA06WS	N15	L15
75.0	10	658	1/2	25	1,083	C12AA06WS	N11	L11	50	1,407	C12AA06WS	N15	L15
100.0	10	878	1/2	19	1,097	C12AA06WS	N11	L11	38	1,426	C12AA06WS	N15	L15
125.0	10	1,097	1/2	15	1,083	C12AA06WS	N11	L11	30	1,407	C12AA06WS	N15	L15
150.0	10	1,316	1/2	12	1,039	C12AA06WS	N11	L11	24	1,351	C12AA06WS	N14	L14

1. TVL = DL + Fv + ($0.2S_{DS}$/1.4 x Wp). All Terms Are Working Loads. Based On Eccentric Loading, 65% Of Total Load Allocated Per Rod.
2. Reductions In Actual Installed Brace Spacing Will Result In An Equal Percentage Reduction In Brace Reaction. As An Option When This Occurs ISAT May Substitute An Alternate Anchorage From Tables D1 or D2 Which Meets or Exceeds The Lowered Brace Reaction.
3. At Max. 30 Degree Brace Inclination.
4. Min. 3,000 psi NWC. Any "N Series" Connection May Be Utilized Having A Numeric Designation Equal To Or Higher Than That Shown.
5. Min. 3,000 psi NWC or LWC. Any "L Series" Connection May Be Utilized Having A Numeric Designation Equal To Or Higher Than That Shown.
6. As An Alternate, Brace Anchorage Connections To Structure May Be Employed Using Any Detail From Structural Connections Section "D" Series Details Where Assembly Design Value Meets Or Exceeds Brace Reaction.
7. For Trade Specific Bracing Installation Notes, Refer To Page 9.1.
8. Utilize Any "G" Series Vertical Support Connection Having A Design Value Equal To Or Greater Than The Corresponding "Rod Total Vertical Load".

REVIEWED FOR CODE COMPLIANCE
OPM-0403
BY: William Staehlin
DATE: 01-26-2024
CALIFORNIA BUILDING CODE, 2019

REGISTERED PROFESSIONAL ENGINEER MARCIN WASAZNIK S-6612 STRUCTURAL STATE OF CALIFORNIA

ISAT
A Division of Tomarco Contractor Specialties
International Seismic Application Technology
14848 Northam Street, La Mirada, CA 90638
877-999-4728 (Toll Free) 714-523-0845 (Fax)
www.isatsb.com

Rev. 0
08/03/2018
Page
C22-0.5-30

CABLE BRACING REQUIREMENTS [7]:

ROD HUNG HVAC DUCT (RECTANGULAR and 2-ROD ROUND) — **MAXIMUM SEISMIC DESIGN FORCE = 0.50 G's**

Requires Use of ISAT Seismic Brackets. Use of Any Non-ISAT Bracket Voids Engineering. — *2013 California Building Code Compliant*

Maximum Trapeze Load (lbs/lf)	Max. Vertical Support Spacing (ft.)	Rod [1] Total Vertical Load (lbs)	Min. [8] Vertical Support Rod Dia. (in.)	TRANSVERSE BRACING REQUIREMENTS					LONGITUDINAL BRACING REQUIREMENTS				
				Max. [2] Brace Spacing (ft.)	Brace [3] Reaction P (lbs)	Min. Brace Assembly E - Pages	Min. Brace Anchorage [6] Form Pour [4] Deck Page D1	Min. Brace Anchorage [6] Metal [5] Deck Page D2	Max. [2] Brace Spacing (ft.)	Brace [3] Reaction P (lbs)	Min. Brace Assembly E - Pages	Min. Brace Anchorage [6] Form Pour [4] Deck Page D1	Min. Brace Anchorage [6] Metal [5] Deck Page D2
				2-Way Transverse Brace Pattern (B31.0, B34.0)					6-Way Transverse, Longitudinal Brace Pattern (B31.1, B34.1)				
11.0	10	97	3/8	30	257	C38AA04WS	N3	L3	60	334	C38AA04WS	N4	L4
25.0	10	219	1/2	30	583	C12AA04WS	N6	L6	60	758	C12AA06WS	N8	L8
35.0	10	307	5/8	30	817	C58AA06WS	N9	L9	60	1,062	C58AA06WS	N11	L11
50.0	10	439	3/4	30	1,167	C34DG06WS	N12	L12	60	1,517	C34DG06TS	N16	L16
65.0	10	570	3/4	23	1,163	C34DG06WS	N12	L12	46	1,512	C34DG06TS	N16	L16
75.0	10	658	3/4	20	1,167	C34DG06WS	N12	L12	40	1,517	C34DG06TS	N16	L16
100.0	10	878	5/8	15	1,167	C58AA06WS	N12	L12	30	1,517	C58DG06TS	N16	L16
125.0	10	1,097	5/8	12	1,167	C58AA06WS	N12	L12	24	1,517	C58DG06TS	N16	L16
150.0	10	1,316	5/8	10	1,167	C58AA06WS	N12	L12	20	1,517	C58DG06TS	N16	L16

1. TVL = DL + Fv + ($0.2S_{DS}$/1.4 x Wp). All Terms Are Working Loads. Based On Eccentric Loading, 65% Of Total Load Allocated Per Rod.
2. Reductions In Actual Installed Brace Spacing Will Result In An Equal Percentage Reduction In Brace Reaction. As An Option When This Occurs ISAT May Substitute An Alternate Anchorage From Tables D1 or D2 Which Meets or Exceeds The Lowered Brace Reaction.
3. At Max. 50 Degree Brace Inclination.
4. Min. 3,000 psi NWC. Any "N Series" Connection May Be Utilized Having A Numeric Designation Equal To Or Higher Than That Shown.
5. Min. 3,000 psi NWC or LWC. Any "L Series" Connection May Be Utilized Having A Numeric Designation Equal To Or Higher Than That Shown.
6. As An Alternate, Brace Anchorage Connections To Structure May Be Employed Using Any Detail From Structural Connections Section "D" Series Details Where Assembly Design Value Meets Or Exceeds Brace Reaction.
7. For Trade Specific Bracing Installation Notes, Refer To Page 9.1.
8. Utilize Any "G" Series Vertical Support Connection Having A Design Value Equal To Or Greater Than The Corresponding "Rod Total Vertical Load".

REVIEWED FOR CODE COMPLIANCE
OPM-0403
BY: William Staehlin
DATE: 01-26-2024
CALIFORNIA BUILDING CODE, 2019

REGISTERED PROFESSIONAL ENGINEER
MARCIN WASAZNIK
S 6612
STRUCTURAL
STATE OF CALIFORNIA

ISAT
A Division of Tomarco Contractor Specialties

International Seismic Application Technology
14848 Northam Street, La Mirada, CA 90638
877-999-4728 (Toll Free) 714-523-0845 (Fax)
www.isatsb.com

Rev. 1
03/12/19
Page
C22-0.5-45

CABLE BRACING REQUIREMENTS [7]:

ROD HUNG HVAC DUCT (RECTANGULAR and 2-ROD ROUND) — **MAXIMUM SEISMIC DESIGN FORCE = 0.50 G's**

Requires Use of ISAT Seismic Brackets. Use of Any Non-ISAT Bracket Voids Engineering. — *2013 California Building Code Compliant*

Maximum Trapeze Load (lbs/lf)	Max. Vertical Support Spacing (ft.)	Rod [1] Total Vertical Load (lbs)	Min. [8] Vertical Support Rod Dia. (in.)	TRANSVERSE BRACING REQUIREMENTS					LONGITUDINAL BRACING REQUIREMENTS				
				Max. [2] Brace Spacing (ft.)	Brace [3] Reaction P (lbs)	Min. Brace Assembly E - Pages	Min. Brace Anchorage [6] Form Pour [4] Deck Page D1	Min. Brace Anchorage [6] Metal [5] Deck Page D2	Max. [2] Brace Spacing (ft.)	Brace [3] Reaction P (lbs)	Min. Brace Assembly E - Pages	Min. Brace Anchorage [6] Form Pour [4] Deck Page D1	Min. Brace Anchorage [6] Metal [5] Deck Page D2
				2-Way Transverse Brace Pattern (B31.0, B34.0)					6-Way Transverse, Longitudinal Brace Pattern (B31.1, B34.1)				
11.0	10	97	1/2	30	330	C12AA04WS	N4	L4	60	429	C12AA04WS	N5	L5
25.0	10	219	5/8	30	750	C58AA06WS	N8	L8	60	975	C58AA06WS	N10	L10
35.0	10	307	3/4	30	1,050	C34DG06WS	N11	L11	60	1,365	C34DG06WS	N14	L14
50.0	10	439	3/4	22	1,100	C34DG06WS	N11	L11	44	1,430	C34DG06WS	N15	L15
65.0	10	570	3/4	17	1,105	C34DG06WS	N12	L12	34	1,437	C34DG06WS	N15	L15
75.0	10	658	3/4	15	1,125	C34DG06WS	N12	L12	30	1,463	C34DG06WS	N15	L15
100.0	10	878	3/4	11	1,100	C34DG06WS	N11	L11	22	1,430	C34DG06WS	N15	L15

1. TVL = DL + Fv + ($0.2S_{DS}$/1.4 x Wp). All Terms Are Working Loads. Based On Eccentric Loading, 65% Of Total Load Allocated Per Rod.
2. Reductions In Actual Installed Brace Spacing Will Result In An Equal Percentage Reduction In Brace Reaction. As An Option When This Occurs ISAT May Substitute An Alternate Anchorage From Tables D1 or D2 Which Meets or Exceeds The Lowered Brace Reaction.
3. At Max. 60 Degree Brace Inclination.
4. Min. 3,000 psi NWC. Any "N Series" Connection May Be Utilized Having A Numeric Designation Equal To Or Higher Than That Shown.
5. Min. 3,000 psi NWC or LWC. Any "L Series" Connection May Be Utilized Having A Numeric Designation Equal To Or Higher Than That Shown.
6. As An Alternate, Brace Anchorage Connections To Structure May Be Employed Using Any Detail From Structural Connections Section "D" Series Details Where Assembly Design Value Meets Or Exceeds Brace Reaction.
7. For Trade Specific Bracing Installation Notes, Refer To Page 9.1.
8. Utilize Any "G" Series Vertical Support Connection Having A Design Value Equal To Or Greater Than The Corresponding "Rod Total Vertical Load".

REVIEWED FOR CODE COMPLIANCE
OPM-0403
BY: William Staehlin
DATE: 01-26-2024
CALIFORNIA BUILDING CODE, 2022

REGISTERED PROFESSIONAL ENGINEER MARCIN WASAZNIK S-6612 STRUCTURAL STATE OF CALIFORNIA

ISAT
A Division of Tomarco Contractor Specialties
International Seismic Application Technology
14848 Northam Street, La Mirada, CA 90638
877-999-4728 (Toll Free) 714-523-0845 (Fax)
www.isatsb.com

Rev. 1
03/12/19
Page
C22-0.5-60

CABLE BRACING REQUIREMENTS [7]:

ROD HUNG HVAC DUCT (RECTANGULAR and 2-ROD ROUND) — **MAXIMUM SEISMIC DESIGN FORCE = 0.75 G's**

Requires Use of ISAT Seismic Brackets. Use of Any Non-ISAT Bracket Voids Engineering. — *2013 California Building Code Compliant*

Maximum Trapeze Load (lbs/lf)	Max. Vertical Support Spacing (ft.)	Rod [1] Total Vertical Load (lbs)	Min. [8] Vertical Support Rod Dia. (in.)	TRANSVERSE BRACING REQUIREMENTS					LONGITUDINAL BRACING REQUIREMENTS				
				Max. [2] Brace Spacing (ft.)	Brace [3] Reaction P (lbs)	Min. Brace Assembly E - Pages	Min. Brace Anchorage [6] Form Pour [4] Deck Page D1	Min. Brace Anchorage [6] Metal [5] Deck Page D2	Max. [2] Brace Spacing (ft.)	Brace [3] Reaction P (lbs)	Min. Brace Assembly E - Pages	Min. Brace Anchorage [6] Form Pour [4] Deck Page D1	Min. Brace Anchorage [6] Metal [5] Deck Page D2
				2-Way Transverse Brace Pattern (B31.0, B34.0)					6-Way Transverse, Longitudinal Brace Pattern (B31.1, B34.1)				
11.0	10	97	3/8	30	286	C38AA04WS	N3	L3	60	372	C38AA04WS	N4	L4
25.0	10	219	1/2	30	650	C12AA04WS	N7	L7	60	844	C12AA06WS	N9	L9
35.0	10	307	1/2	30	909	C12AA06WS	N10	L10	60	1,182	C12AA06WS	N12	L12
50.0	10	439	1/2	25	1,083	C12AA06WS	N11	L11	50	1,407	C12AA06WS	N15	L15
65.0	10	570	1/2	19	1,070	C12AA06WS	N11	L11	38	1,390	C12AA06WS	N14	L14
75.0	10	658	1/2	17	1,104	C12AA06WS	N12	L12	34	1,435	C12AA06WS	N15	L15
100.0	10	878	1/2	12	1,039	C12AA06WS	N11	L11	24	1,351	C12AA06WS	N14	L14
125.0	10	1,097	1/2	10	1,083	C12AA06WS	N11	L11	20	1,407	C12AA06WS	N15	L15

1. TVL = DL + Fv + ($0.2S_{DS}$/1.4 x Wp). All Terms Are Working Loads. Based On Eccentric Loading, 65% Of Total Load Allocated Per Rod.
2. Reductions In Actual Installed Brace Spacing Will Result In An Equal Percentage Reduction In Brace Reaction. As An Option When This Occurs ISAT May Substitute An Alternate Anchorage From Tables D1 or D2 Which Meets or Exceeds The Lowered Brace Reaction.
3. At Max. 30 Degree Brace Inclination.
4. Min. 3,000 psi NWC. Any "N Series" Connection May Be Utilized Having A Numeric Designation Equal To Or Higher Than That Shown.
5. Min. 3,000 psi NWC or LWC. Any "L Series" Connection May Be Utilized Having A Numeric Designation Equal To Or Higher Than That Shown.
6. As An Alternate, Brace Anchorage Connections To Structure May Be Employed Using Any Detail From Structural Connections Section "D" Series Details Where Assembly Design Value Meets Or Exceeds Brace Reaction.
7. For Trade Specific Bracing Installation Notes, Refer To Page 9.1.
8. Utilize Any "G" Series Vertical Support Connection Having A Design Value Equal To Or Greater Than The Corresponding "Rod Total Vertical Load".

REVIEWED FOR CODE COMPLIANCE
OPM-0403
BY: William Staehlin
DATE: 01-26-2024
CALIFORNIA BUILDING CODE, 2022

REGISTERED PROFESSIONAL ENGINEER MARCIN WASAZNIK S-6612 STRUCTURAL STATE OF CALIFORNIA

ISAT
A Division of Tomarco Contractor Specialties
International Seismic Application Technology
14848 Northam Street, La Mirada, CA 90638
877-999-4728 (Toll Free) 714-523-0845 (Fax)
www.isatsb.com

Rev. 0
08/03/2018
Page
C22-0.75-30

CABLE BRACING REQUIREMENTS [7]:

ROD HUNG HVAC DUCT (RECTANGULAR and 2-ROD ROUND) — **MAXIMUM SEISMIC DESIGN FORCE = 0.75 G's**

Requires Use of ISAT Seismic Brackets. Use of Any Non-ISAT Bracket Voids Engineering. — *2013 California Building Code Compliant*

Maximum Trapeze Load (lbs/lf)	Max. Vertical Support Spacing (ft.)	Rod [1] Total Vertical Load (lbs)	Min. [8] Vertical Support Rod Dia. (in.)	TRANSVERSE BRACING REQUIREMENTS					LONGITUDINAL BRACING REQUIREMENTS				
				Max. [2] Brace Spacing (ft.)	Brace [3] Reaction P (lbs)	Min. Brace Assembly E - Pages	Min. Brace Anchorage [6] Form Pour [4] Deck Page D1	Min. Brace Anchorage [6] Metal [5] Deck Page D2	Max. [2] Brace Spacing (ft.)	Brace [3] Reaction P (lbs)	Min. Brace Assembly E - Pages	Min. Brace Anchorage [6] Form Pour [4] Deck Page D1	Min. Brace Anchorage [6] Metal [5] Deck Page D2
				2-Way Transverse Brace Pattern (B31.0, B34.0)					6-Way Transverse, Longitudinal Brace Pattern (B31.1, B34.1)				
11.0	10	97	1/2	30	385	C12AA04WS	N4	L4	60	501	C12AA04WS	N6	L6
25.0	10	219	5/8	30	875	C58AA06WS	N9	L9	60	1,138	C58AA06WS	N12	L12
35.0	10	307	5/8	27	1,103	C58AA06WS	N12	L12	54	1,433	C58AA06WS	N15	L15
50.0	10	439	3/4	20	1,167	C34DG06WS	N12	L12	40	1,517	C34DG06TS	N16	L16
65.0	10	570	5/8	15	1,138	C58AA06WS	N12	L12	30	1,479	C58AA06WS	N15	L15
75.0	10	658	5/8	13	1,138	C58AA06WS	N12	L12	26	1,479	C58AA06WS	N15	L15
100.0	10	878	5/8	10	1,167	C58AA06WS	N12	L12	20	1,517	C58DG06TS	N16	L16

1. TVL = DL + Fv + ($0.2S_{DS}$/1.4 x Wp). All Terms Are Working Loads. Based On Eccentric Loading, 65% Of Total Load Allocated Per Rod.
2. Reductions In Actual Installed Brace Spacing Will Result In An Equal Percentage Reduction In Brace Reaction. As An Option When This Occurs ISAT May Substitute An Alternate Anchorage From Tables D1 or D2 Which Meets or Exceeds The Lowered Brace Reaction.
3. At Max. 50 Degree Brace Inclination.
4. Min. 3,000 psi NWC. Any "N Series" Connection May Be Utilized Having A Numeric Designation Equal To Or Higher Than That Shown.
5. Min. 3,000 psi NWC or LWC. Any "L Series" Connection May Be Utilized Having A Numeric Designation Equal To Or Higher Than That Shown.
6. As An Alternate, Brace Anchorage Connections To Structure May Be Employed Using Any Detail From Structural Connections Section "D" Series Details Where Assembly Design Value Meets Or Exceeds Brace Reaction.
7. For Trade Specific Bracing Installation Notes, Refer To Page 9.1.
8. Utilize Any "G" Series Vertical Support Connection Having A Design Value Equal To Or Greater Than The Corresponding "Rod Total Vertical Load".

REVIEWED FOR CODE COMPLIANCE
OPM-0403
BY: William Staehlin
DATE: 01-26-2024
CALIFORNIA BUILDING CODE, 2022

REGISTERED PROFESSIONAL ENGINEER
MARCIN WASAZNIK
S 6612
STRUCTURAL
STATE OF CALIFORNIA

ISAT
A Division of Tomarco Contractor Specialties
International Seismic Application Technology
14848 Northam Street, La Mirada, CA 90638
877-999-4728 (Toll Free) 714-523-0845 (Fax)
www.isatsb.com

Rev. 1
3/12/19
Page
C22-0.75-45

CABLE BRACING REQUIREMENTS [7]:

ROD HUNG HVAC DUCT (RECTANGULAR and 2-ROD ROUND) — **MAXIMUM SEISMIC DESIGN FORCE = 0.75 G's**

Requires Use of ISAT Seismic Brackets. Use of Any Non-ISAT Bracket Voids Engineering. — *2013 California Building Code Compliant*

Maximum Trapeze Load (lbs/lf)	Max. Vertical Support Spacing (ft.)	Rod [1] Total Vertical Load (lbs)	Min. [8] Vertical Support Rod Dia. (in.)	TRANSVERSE BRACING REQUIREMENTS					LONGITUDINAL BRACING REQUIREMENTS				
				Max. [2] Brace Spacing (ft.)	Brace [3] Reaction P (lbs)	Min. Brace Assembly E - Pages	Min. Brace Anchorage [6] Form Pour [4] Deck Page D1	Min. Brace Anchorage [6] Metal [5] Deck Page D2	Max. [2] Brace Spacing (ft.)	Brace [3] Reaction P (lbs)	Min. Brace Assembly E - Pages	Min. Brace Anchorage [6] Form Pour [4] Deck Page D1	Min. Brace Anchorage [6] Metal [5] Deck Page D2
				2-Way Transverse Brace Pattern (B31.0, B34.0)					6-Way Transverse, Longitudinal Brace Pattern (B31.1, B34.1)				
11.0	10	97	1/2	30	495	C12AA04WS	N5	L5	60	644	C12AA04WS	N7	L7
25.0	10	219	3/4	30	1,125	C34DG06WS	N12	L12	60	1,463	C34DG06WS	N15	L15
35.0	10	307	3/4	21	1,103	C34DG06WS	N12	L12	42	1,433	C34DG06WS	N15	L15
50.0	10	439	3/4	15	1,125	C34DG06WS	N12	L12	30	1,463	C34DG06WS	N15	L15
65.0	10	570	3/4	11	1,073	C34DG06WS	N11	L11	22	1,394	C34DG06WS	N14	L14
75.0	10	658	3/4	10	1,125	C34DG06WS	N12	L12	20	1,463	C34DG06WS	N15	L15

1. TVL = DL + Fv + ($0.2S_{DS}$/1.4 x Wp). All Terms Are Working Loads. Based On Eccentric Loading, 65% Of Total Load Allocated Per Rod.
2. Reductions In Actual Installed Brace Spacing Will Result In An Equal Percentage Reduction In Brace Reaction. As An Option When This Occurs ISAT May Substitute An Alternate Anchorage From Tables D1 or D2 Which Meets or Exceeds The Lowered Brace Reaction.
3. At Max. 60 Degree Brace Inclination.
4. Min. 3,000 psi NWC. Any "N Series" Connection May Be Utilized Having A Numeric Designation Equal To Or Higher Than That Shown.
5. Min. 3,000 psi NWC or LWC. Any "L Series" Connection May Be Utilized Having A Numeric Designation Equal To Or Higher Than That Shown.
6. As An Alternate, Brace Anchorage Connections To Structure May Be Employed Using Any Detail From Structural Connections Section "D" Series Details Where Assembly Design Value Meets Or Exceeds Brace Reaction.
7. For Trade Specific Bracing Installation Notes, Refer To Page 9.1.
8. Utilize Any "G" Series Vertical Support Connection Having A Design Value Equal To Or Greater Than The Corresponding "Rod Total Vertical Load".

REVIEWED FOR CODE COMPLIANCE
OPM-0403
BY: William Staehlin
DATE: 01-26-2024
CALIFORNIA BUILDING CODE, 2022

REGISTERED PROFESSIONAL ENGINEER
MARCIN WASAZNIK
S 6612
STRUCTURAL
STATE OF CALIFORNIA

ISAT
A Division of Tomarco Contractor Specialties
International Seismic Application Technology
14848 Northam Street, La Mirada, CA 90638
877-999-4728 (Toll Free) 714-523-0845 (Fax)
www.isatsb.com

Rev. 1
03/12/19
Page
C22-0.75-60

CABLE BRACING REQUIREMENTS [7]:

ROD HUNG HVAC DUCT (RECTANGULAR and 2-ROD ROUND) — **MAXIMUM SEISMIC DESIGN FORCE = 1.00 G's**

Requires Use of ISAT Seismic Brackets. Use of Any Non-ISAT Bracket Voids Engineering. — *2013 California Building Code Compliant*

Maximum Trapeze Load (lbs/lf)	Max. Vertical Support Spacing (ft.)	Rod [1] Total Vertical Load (lbs)	Min. [8] Vertical Support Rod Dia. (in.)	TRANSVERSE BRACING REQUIREMENTS					LONGITUDINAL BRACING REQUIREMENTS				
				Max. [2] Brace Spacing (ft.)	Brace [3] Reaction P (lbs)	Min. Brace Assembly E - Pages	Min. Brace Anchorage [6] Form Pour [4] Deck Page D1	Min. Brace Anchorage [6] Metal [5] Deck Page D2	Max. [2] Brace Spacing (ft.)	Brace [3] Reaction P (lbs)	Min. Brace Assembly E - Pages	Min. Brace Anchorage [6] Form Pour [4] Deck Page D1	Min. Brace Anchorage [6] Metal [5] Deck Page D2
				2-Way Transverse Brace Pattern (B31.0, B34.0)					6-Way Transverse, Longitudinal Brace Pattern (B31.1, B34.1)				
11.0	10	97	3/8	30	381	C38AA04WS	N4	L4	60	495	C38AA04WS	N5	L5
25.0	10	219	1/2	30	866	C12AA06WS	N9	L9	60	1,126	C12AA06WS	N12	L12
35.0	10	307	1/2	27	1,091	C12AA06WS	N11	L11	54	1,419	C12AA06WS	N15	L15
50.0	10	439	1/2	19	1,097	C12AA06WS	N11	L11	38	1,426	C12AA06WS	N15	L15
65.0	10	570	1/2	14	1,051	C12AA06WS	N11	L11	28	1,366	C12AA06WS	N14	L14
75.0	10	658	1/2	12	1,039	C12AA06WS	N11	L11	24	1,351	C12AA06WS	N14	L14

1. TVL = DL + Fv + ($0.2S_{DS}$/1.4 x Wp). All Terms Are Working Loads. Based On Eccentric Loading, 65% Of Total Load Allocated Per Rod.
2. Reductions In Actual Installed Brace Spacing Will Result In An Equal Percentage Reduction In Brace Reaction. As An Option When This Occurs ISAT May Substitute An Alternate Anchorage From Tables D1 or D2 Which Meets or Exceeds The Lowered Brace Reaction.
3. At Max. 30 Degree Brace Inclination.
4. Min. 3,000 psi NWC. Any "N Series" Connection May Be Utilized Having A Numeric Designation Equal To Or Higher Than That Shown.
5. Min. 3,000 psi NWC or LWC. Any "L Series" Connection May Be Utilized Having A Numeric Designation Equal To Or Higher Than That Shown.
6. As An Alternate, Brace Anchorage Connections To Structure May Be Employed Using Any Detail From Structural Connections Section "D" Series Details Where Assembly Design Value Meets Or Exceeds Brace Reaction.
7. For Trade Specific Bracing Installation Notes, Refer To Page 9.1.
8. Utilize Any "G" Series Vertical Support Connection Having A Design Value Equal To Or Greater Than The Corresponding "Rod Total Vertical Load".

REVIEWED FOR CODE COMPLIANCE
OPM-0403
BY: William Staehlin
DATE: 01-26-2024
CALIFORNIA BUILDING CODE, 2022

REGISTERED PROFESSIONAL ENGINEER
MARCIN WASAZNIK
S 6612
STRUCTURAL
STATE OF CALIFORNIA

ISAT
A Division of Tomarco Contractor Specialties

International Seismic Application Technology
14848 Northam Street, La Mirada, CA 90638
877-999-4728 (Toll Free) 714-523-0845 (Fax)
www.isatsb.com

Rev. 0
08/03/2018
Page
C22-1-30

CABLE BRACING REQUIREMENTS [7]:

ROD HUNG HVAC DUCT (RECTANGULAR and 2-ROD ROUND) — **MAXIMUM SEISMIC DESIGN FORCE = 1.00 G's**

Requires Use of ISAT Seismic Brackets. Use of Any Non-ISAT Bracket Voids Engineering. — *2013 California Building Code Compliant*

Maximum Trapeze Load (lbs/lf)	Max. Vertical Support Spacing (ft.)	Rod [1] Total Vertical Load (lbs)	Min. [8] Vertical Support Rod Dia. (in.)	TRANSVERSE BRACING REQUIREMENTS					LONGITUDINAL BRACING REQUIREMENTS				
				Max. [2] Brace Spacing (ft.)	Brace [3] Reaction P (lbs)	Min. Brace Assembly E - Pages	Min. Brace Anchorage [6] Form Pour [4] Deck Page D1	Min. Brace Anchorage [6] Metal [5] Deck Page D2	Max. [2] Brace Spacing (ft.)	Brace [3] Reaction P (lbs)	Min. Brace Assembly E - Pages	Min. Brace Anchorage [6] Form Pour [4] Deck Page D1	Min. Brace Anchorage [6] Metal [5] Deck Page D2
				2-Way Transverse Brace Pattern (B31.0, B34.0)					6-Way Transverse, Longitudinal Brace Pattern (B31.1, B34.1)				
11.0	10	97	1/2	30	513	C12AA04WS	N6	L6	60	667	C12AA04WS	N7	L7
25.0	10	219	3/4	30	1,167	C34DG06WS	N12	L12	60	1,517	C34DG06TS	N16	L16
35.0	10	307	3/4	22	1,198	C34DG06WS	N12	L12	44	1,557	C34DG06TS	N16	L16
50.0	10	439	3/4	15	1,167	C34DG06WS	N12	L12	30	1,517	C34DG06TS	N16	L16
65.0	10	570	5/8	11	1,112	C58AA06WS	N12	L12	22	1,446	C58AA06WS	N15	L15
75.0	10	658	3/4	10	1,167	C34DG06WS	N12	L12	20	1,517	C34DG06TS	N16	L16

1. TVL = DL + Fv + ($0.2S_{DS}$/1.4 x Wp). All Terms Are Working Loads. Based On Eccentric Loading, 65% Of Total Load Allocated Per Rod.
2. Reductions In Actual Installed Brace Spacing Will Result In An Equal Percentage Reduction In Brace Reaction. As An Option When This Occurs ISAT May Substitute An Alternate Anchorage From Tables D1 or D2 Which Meets or Exceeds The Lowered Brace Reaction.
3. At Max. 50 Degree Brace Inclination.
4. Min. 3,000 psi NWC. Any "N Series" Connection May Be Utilized Having A Numeric Designation Equal To Or Higher Than That Shown.
5. Min. 3,000 psi NWC or LWC. Any "L Series" Connection May Be Utilized Having A Numeric Designation Equal To Or Higher Than That Shown.
6. As An Alternate, Brace Anchorage Connections To Structure May Be Employed Using Any Detail From Structural Connections Section "D" Series Details Where Assembly Design Value Meets Or Exceeds Brace Reaction.
7. For Trade Specific Bracing Installation Notes, Refer To Page 9.1.
8. Utilize Any "G" Series Vertical Support Connection Having A Design Value Equal To Or Greater Than The Corresponding "Rod Total Vertical Load".

REVIEWED FOR CODE COMPLIANCE
OPM-0403
BY: William Staehlin
DATE: 01-26-2024
CALIFORNIA BUILDING CODE, 2022

REGISTERED PROFESSIONAL ENGINEER MARCIN WASAZNIK S-6612 STRUCTURAL STATE OF CALIFORNIA

ISAT
A Division of Tomarco Contractor Specialties
International Seismic Application Technology
14848 Northam Street, La Mirada, CA 90638
877-999-4728 (Toll Free) 714-523-0845 (Fax)
www.isatsb.com

Rev. 1
3/12/19
Page
C22-1-45

CABLE BRACING REQUIREMENTS [7]:

ROD HUNG HVAC DUCT (RECTANGULAR and 2-ROD ROUND) — **MAXIMUM SEISMIC DESIGN FORCE = 1.00 G's**

Requires Use of ISAT Seismic Brackets. Use of Any Non-ISAT Bracket Voids Engineering. — *2013 California Building Code Compliant*

Maximum Trapeze Load (lbs/lf)	Max. Vertical Support Spacing (ft.)	Rod [1] Total Vertical Load (lbs)	Min. [8] Vertical Support Rod Dia. (in.)	TRANSVERSE BRACING REQUIREMENTS					LONGITUDINAL BRACING REQUIREMENTS				
				Max. [2] Brace Spacing (ft.)	Brace [3] Reaction P (lbs)	Min. Brace Assembly E - Pages	Min. Brace Anchorage [6] Form Pour [4] Deck Page D1	Min. Brace Anchorage [6] Metal [5] Deck Page D2	Max. [2] Brace Spacing (ft.)	Brace [3] Reaction P (lbs)	Min. Brace Assembly E - Pages	Min. Brace Anchorage [6] Form Pour [4] Deck Page D1	Min. Brace Anchorage [6] Metal [5] Deck Page D2
				2-Way Transverse Brace Pattern (B31.0, B34.0)					6-Way Transverse, Longitudinal Brace Pattern (B31.1, B34.1)				
11.0	10	97	1/2	30	660	C12AA04WS	N7	L7	60	858	C12AA06WS	N9	L9
25.0	10	219	3/4	22	1,100	C34DG06WS	N11	L11	44	1,430	C34DG06WS	N15	L15
35.0	10	307	3/4	16	1,120	C34DG06WS	N12	L12	32	1,456	C34DG06WS	N15	L15
50.0	10	439	3/4	11	1,100	C34DG06WS	N11	L11	22	1,430	C34DG06WS	N15	L15

1. TVL = DL + Fv + ($0.2S_{DS}$/1.4 x Wp). All Terms Are Working Loads. Based On Eccentric Loading, 65% Of Total Load Allocated Per Rod.
2. Reductions In Actual Installed Brace Spacing Will Result In An Equal Percentage Reduction In Brace Reaction. As An Option When This Occurs ISAT May Substitute An Alternate Anchorage From Tables D1 or D2 Which Meets or Exceeds The Lowered Brace Reaction.
3. At Max. 60 Degree Brace Inclination.
4. Min. 3,000 psi NWC. Any "N Series" Connection May Be Utilized Having A Numeric Designation Equal To Or Higher Than That Shown.
5. Min. 3,000 psi NWC or LWC. Any "L Series" Connection May Be Utilized Having A Numeric Designation Equal To Or Higher Than That Shown.
6. As An Alternate, Brace Anchorage Connections To Structure May Be Employed Using Any Detail From Structural Connections Section "D" Series Details Where Assembly Design Value Meets Or Exceeds Brace Reaction.
7. For Trade Specific Bracing Installation Notes, Refer To Page 9.1.
8. Utilize Any "G" Series Vertical Support Connection Having A Design Value Equal To Or Greater Than The Corresponding "Rod Total Vertical Load".

REVIEWED FOR CODE COMPLIANCE
OPM-0403
BY: William Staehlin
DATE: 01-26-2024
CALIFORNIA BUILDING CODE, 2022

REGISTERED PROFESSIONAL ENGINEER MARCIN WASAZNIK S-6612 STRUCTURAL STATE OF CALIFORNIA

ISAT
A Division of Tomarco Contractor Specialties
International Seismic Application Technology
14848 Northam Street, La Mirada, CA 90638
877-999-4728 (Toll Free) 714-523-0845 (Fax)
www.isatsb.com

Rev. 1
03/12/19
Page
C22-1-60

4-WAY SPLAYED RIGID BRACING REQUIREMENTS [7]:

ROD HUNG HVAC DUCT (Rectangular and 2-Rod Round) ***MAXIMUM SEISMIC DESIGN FORCE = 0.25 G's***

Requires Use of ISAT Seismic Brackets. Use of Any Non-ISAT Bracket Voids Engineering. 2013 California Building Code Compliant

Maximum Trapeze Load (lbs/lf)	Max. Vertical Support Spacing (ft.)	Rod [1] Total Vertical Load (lbs)	Min. [8] Vertical Support Rod Dia. (in.)	4-WAY SPLAYED RIGID BRACING REQUIREMENTS				
				Max. [2] Brace Spacing (ft.)	Brace [3] Reaction P (lbs)	Min. Brace Assembly E - Pages	Min. Brace Anchorage [6] Form Pour [4] Deck Page D1	Min. Brace Anchorage [6] Metal [5] Deck Page D2
				4-Way Splayed Brace Pattern (B30.4, B33.4)				
11.0	10	136	3/8	30	67	R38AAEM306	N1	L1
25.0	10	308	1/2	30	153	R12AAEM306	N2	L2
35.0	10	431	1/2	30	214	R12AAEM306	N3	L3
50.0	10	616	1/2	30	306	R12AAEM409	N4	L4
65.0	10	801	1/2	30	398	R12AAEM406	N4	L4
75.0	10	924	1/2	30	459	R12AAEM406	N5	L5
100.0	10	1,233	1/2	30	612	R12AAEM406	N7	L7
125.0	10	1,541	5/8	30	765	R58AAEM509	N8	L8
150.0	10	1,849	5/8	30	919	R58AAEM506	N10	L10
175.0	10	2,157	5/8	30	1,072	R58AAEM506	N11	L11
200.0	10	2,323	5/8	24	980	R58AAEM506	N10	L10
225.0	10	2,534	3/4	21	964	R34DGB1P06	N10	L10

1. TVL = DL + Fv + ($0.2S_{DS}$/1.4 x Wp). All Terms Are Working Loads. Based On Eccentric Loading. 65% Of Total Load Allocated Per Rod.
2. Reductions In Actual Installed Brace Spacing Will Result In An Equal Percentage Reduction In Brace Reaction. As An Option When This Occurs ISAT May Substitute An Alternate Anchorage From Tables D1 or D2 Which Meets or Exceeds The Lowered Brace Reaction.
3. At Max. 30 Degree Brace Inclination.
4. Min. 3,000 psi NWC. Any "N Series" Connection May Be Utilized Having A Numeric Designation Equal To Or Higher Than That Shown.
5. Min. 3,000 psi NWC or LWC. Any "L Series" Connection May Be Utilized Having A Numeric Designation Equal To Or Higher Than That Shown.
6. As An Alternate, Brace Anchorage Connections To Structure May Be Employed Using Any Detail From Structural Connections Section "D" Series Details Where Assembly Design Value Meets Or Exceeds Brace Reaction.
7. For Trade Specific Bracing Installation Notes, Refer To Page 9.1.
8. Utilize Any "G" Series Vertical Support Connection Having A Design Value Equal To Or Greater Than The Corresponding "Rod Total Vertical Load".

REVIEWED FOR CODE COMPLIANCE
HCAi
OPM-0403
BY: William Staehlin
DATE: 01-26-2024
CALIFORNIA BUILDING CODE

REGISTERED PROFESSIONAL ENGINEER
MARCIN WASAZNIK
S-6612
STRUCTURAL
STATE OF CALIFORNIA

ISAT
A Division of Tomarco Contractor Specialties

International Seismic Application Technology
14848 Northam Street, La Mirada, CA 90638
877-999-4728 (Toll Free) 714-523-0845 (Fax)
www.isatsb.com

4-WAY SPLAYED RIGID BRACING REQUIREMENTS [7]:

ROD HUNG HVAC DUCT (Rectangular and 2-Rod Round) ***MAXIMUM SEISMIC DESIGN FORCE = 0.25 G's***

Requires Use of ISAT Seismic Brackets. Use of Any Non-ISAT Bracket Voids Engineering. 2013 California Building Code Compliant

Maximum Trapeze Load (lbs/lf)	Max. Vertical Support Spacing (ft.)	Rod [1] Total Vertical Load (lbs)	Min. [8] Vertical Support Rod Dia. (in.)	4-WAY SPLAYED RIGID BRACING REQUIREMENTS				
				Max. [2] Brace Spacing (ft.)	Brace [3] Reaction P (lbs)	Min. Brace Assembly E - Pages	Min. Brace Anchorage [6] Form Pour [4] Deck Page D1	Min. Brace Anchorage [6] Metal [5] Deck Page D2
				4-Way Splayed Brace Pattern (B30.4, B33.4)				
11.0	10	177	3/8	30	91	R38AAEM306	N1	L1
25.0	10	403	1/2	30	206	R12AAEM306	N3	L3
35.0	10	564	1/2	30	289	R12AAEM306	N3	L3
50.0	10	805	1/2	30	413	R12AAEM406	N5	L5
65.0	10	1,047	1/2	30	536	R12AAEM406	N6	L6
75.0	10	1,208	1/2	30	619	R12AAEM406	N7	L7
100.0	10	1,610	5/8	30	825	R58AAEM506	N9	L9
125.0	10	2,013	5/8	30	1,031	R58AAEM506	N11	L11
150.0	10	2,416	3/4	30	1,238	R34CFB1P06	N13	L13
175.0	10	2,818	3/4	30	1,444	R34CFB2P12	N15	L15
200.0	10	3,221	3/4	30	1,650	R34CFB2P12	N17	L17
225.0	10	3,404	3/4	26	1,609	R34CFB2P12	N17	L17

1. TVL = DL + Fv + ($0.2S_{DS}$/1.4 x Wp). All Terms Are Working Loads. Based On Eccentric Loading. 65% Of Total Load Allocated Per Rod.
2. Reductions In Actual Installed Brace Spacing Will Result In An Equal Percentage Reduction In Brace Reaction. As An Option When This Occurs ISAT May Substitute An Alternate Anchorage From Tables D1 or D2 Which Meets or Exceeds The Lowered Brace Reaction.
3. At Max. 50 Degree Brace Inclination.
4. Min. 3,000 psi NWC. Any "N Series" Connection May Be Utilized Having A Numeric Designation Equal To Or Higher Than That Shown.
5. Min. 3,000 psi NWC or LWC. Any "L Series" Connection May Be Utilized Having A Numeric Designation Equal To Or Higher Than That Shown.
6. As An Alternate, Brace Anchorage Connections To Structure May Be Employed Using Any Detail From Structural Connections Section "D" Series Details Where Assembly Design Value Meets Or Exceeds Brace Reaction.
7. For Trade Specific Bracing Installation Notes, Refer To Page 9.1.
8. Utilize Any "G" Series Vertical Support Connection Having A Design Value Equal To Or Greater Than The Corresponding "Rod Total Vertical Load".

REVIEWED FOR CODE COMPLIANCE
HCAi
OPM-0403
BY: William Staehlin
DATE: 01-26-2024
CALIFORNIA BUILDING CODE

REGISTERED PROFESSIONAL ENGINEER
MARCIN WASAZNIK
S-6612
STRUCTURAL
STATE OF CALIFORNIA

ISAT
A Division of Tomarco Contractor Specialties

International Seismic Application Technology
14848 Northam Street, La Mirada, CA 90638
877-999-4728 (Toll Free) 714-523-0845 (Fax)
www.isatsb.com

4-WAY SPLAYED RIGID BRACING REQUIREMENTS [7] :

ROD HUNG HVAC DUCT (Rectangular and 2-Rod Round) ***MAXIMUM SEISMIC DESIGN FORCE = 0.25 G's***

Requires Use of ISAT Seismic Brackets. Use of Any Non-ISAT Bracket Voids Engineering. 2013 California Building Code Compliant

Maximum Trapeze Load (lbs/lf)	Max. Vertical Support Spacing (ft.)	Rod [1] Total Vertical Load (lbs)	Min. [8] Vertical Support Rod Dia. (in.)	4-WAY SPLAYED RIGID BRACING REQUIREMENTS				
				Max. [2] Brace Spacing (ft.)	Brace [3] Reaction P (lbs)	Min. Brace Assembly E - Pages	Min. Brace Anchorage [6] Form Pour [4] Deck Page D1	Min. Brace Anchorage [6] Metal [5] Deck Page D2
				4-Way Splayed Brace Pattern (B30.4, B33.4)				
11.0	10	214	3/8	30	117	R38AAEM306	N2	L2
25.0	10	486	1/2	30	265	R12AAEM306	N3	L3
35.0	10	680	1/2	30	371	R12AAEM406	N4	L4
50.0	10	971	1/2	30	530	R12AAEM406	N6	L6
65.0	10	1,263	1/2	30	689	R12AAEM509	N7	L7
75.0	10	1,457	1/2	30	795	R12AAEM506	N8	L8
100.0	10	1,943	5/8	30	1,061	R58AAEM506	N11	L11
125.0	10	2,428	3/4	30	1,326	R34DGB1S06	N14	L14
150.0	10	2,701	3/4	26	1,379	R34DGB1S06	N14	L14
175.0	10	2,903	3/4	22	1,361	R34DGB1S06	N14	L14
200.0	10	3,104	3/4	19	1,344	R34DGB1S06	N14	L14
225.0	10	3,333	3/4	17	1,352	R34DGB1S06	N14	L14

1. TVL = DL + Fv + ($0.2S_{DS}$/1.4 x Wp). All Terms Are Working Loads. Based On Eccentric Loading. 65% Of Total Load Allocated Per Rod.
2. Reductions In Actual Installed Brace Spacing Will Result In An Equal Percentage Reduction In Brace Reaction. As An Option When This Occurs ISAT May Substitute An Alternate Anchorage From Tables D1 or D2 Which Meets or Exceeds The Lowered Brace Reaction.
3. At Max. 60 Degree Brace Inclination.
4. Min. 3,000 psi NWC. Any "N Series" Connection May Be Utilized Having A Numeric Designation Equal To Or Higher Than That Shown.
5. Min. 3,000 psi NWC or LWC. Any "L Series" Connection May Be Utilized Having A Numeric Designation Equal To Or Higher Than That Shown.
6. As An Alternate, Brace Anchorage Connections To Structure May Be Employed Using Any Detail From Structural Connections Section "D" Series Details Where Assembly Design Value Meets Or Exceeds Brace Reaction.
7. For Trade Specific Bracing Installation Notes, Refer To Page 9.1.
8. Utilize Any "G" Series Vertical Support Connection Having A Design Value Equal To Or Greater Than The Corresponding "Rod Total Vertical Load".

REVIEWED FOR CODE COMPLIANCE BY: HCAi OPM-0403 BY: William Staehlin DATE: 01-26-2024 CALIFORNIA BUILDING CODE

REGISTERED PROFESSIONAL ENGINEER MARCIN WASAZNIK S-6612 STRUCTURAL STATE OF CALIFORNIA

ISAT
A Division of Tomarco Contractor Specialties

International Seismic Application Technology
14848 Northam Street, La Mirada, CA 90638
877-999-4728 (Toll Free) 714-523-0845 (Fax)
www.isatsb.com

4-WAY SPLAYED RIGID BRACING REQUIREMENTS [7] :

ROD HUNG HVAC DUCT (Rectangular and 2-Rod Round) ***MAXIMUM SEISMIC DESIGN FORCE = 0.50 G's***

Requires Use of ISAT Seismic Brackets. Use of Any Non-ISAT Bracket Voids Engineering. 2013 California Building Code Compliant

Maximum Trapeze Load (lbs/lf)	Max. Vertical Support Spacing (ft.)	Rod [1] Total Vertical Load (lbs)	Min. [8] Vertical Support Rod Dia. (in.)	4-WAY SPLAYED RIGID BRACING REQUIREMENTS				
				Max. [2] Brace Spacing (ft.)	Brace [3] Reaction P (lbs)	Min. Brace Assembly E - Pages	Min. Brace Anchorage [6] Form Pour [4] Deck Page D1	Min. Brace Anchorage [6] Metal [5] Deck Page D2
				4-Way Splayed Brace Pattern (B30.4, B33.4)				
11.0	10	175	3/8	30	135	R38AAEM306	N2	L2
25.0	10	397	1/2	30	306	R12AAEM409	N4	L4
35.0	10	556	1/2	30	429	R12AAEM406	N5	L5
50.0	10	794	1/2	30	612	R12AAEM406	N7	L7
65.0	10	1,032	1/2	30	796	R12AAEM506	N8	L8
75.0	10	1,191	1/2	30	919	R12AAEM506	N10	L10
100.0	10	1,564	5/8	29	1,184	R58AAEM506	N12	L12
125.0	10	1,777	5/8	23	1,174	R58AAEM506	N12	L12
150.0	10	1,991	5/8	19	1,164	R58AAEM506	N12	L12
175.0	10	2,198	5/8	16	1,143	R58AAEM506	N12	L12
200.0	10	2,323	5/8	12	980	R58AAEM506	N10	L10
225.0	10	2,507	3/4	10	919	R34DGB1P06	N10	L10

1. TVL = DL + Fv + ($0.2S_{DS}$/1.4 x Wp). All Terms Are Working Loads. Based On Eccentric Loading. 65% Of Total Load Allocated Per Rod.
2. Reductions In Actual Installed Brace Spacing Will Result In An Equal Percentage Reduction In Brace Reaction. As An Option When This Occurs ISAT May Substitute An Alternate Anchorage From Tables D1 or D2 Which Meets or Exceeds The Lowered Brace Reaction.
3. At Max. 30 Degree Brace Inclination.
4. Min. 3,000 psi NWC. Any "N Series" Connection May Be Utilized Having A Numeric Designation Equal To Or Higher Than That Shown.
5. Min. 3,000 psi NWC or LWC. Any "L Series" Connection May Be Utilized Having A Numeric Designation Equal To Or Higher Than That Shown.
6. As An Alternate, Brace Anchorage Connections To Structure May Be Employed Using Any Detail From Structural Connections Section "D" Series Details Where Assembly Design Value Meets Or Exceeds Brace Reaction.
7. For Trade Specific Bracing Installation Notes, Refer To Page 9.1.
8. Utilize Any "G" Series Vertical Support Connection Having A Design Value Equal To Or Greater Than The Corresponding "Rod Total Vertical Load".

REVIEWED FOR CODE COMPLIANCE BY: William Staehlin DATE: 01-26-2024 OPM-0403 HCAi CALIFORNIA BUILDING CODES

REGISTERED PROFESSIONAL ENGINEER MARCIN WASAZNIK S-6612 STRUCTURAL STATE OF CALIFORNIA

ISAT
A Division of Tomarco Contractor Specialties

International Seismic Application Technology
14848 Northam Street, La Mirada, CA 90638
877-999-4728 (Toll Free) 714-523-0845 (Fax)
www.isatsb.com

4-WAY SPLAYED RIGID BRACING REQUIREMENTS [7] :

ROD HUNG HVAC DUCT (Rectangular and 2-Rod Round) ***MAXIMUM SEISMIC DESIGN FORCE = 0.50 G's***

Requires Use of ISAT Seismic Brackets. Use of Any Non-ISAT Bracket Voids Engineering. 2013 California Building Code Compliant

Maximum Trapeze Load (lbs/lf)	Max. Vertical Support Spacing (ft.)	Rod [1] Total Vertical Load (lbs)	Min. [8] Vertical Support Rod Dia. (in.)	4-WAY SPLAYED RIGID BRACING REQUIREMENTS				
				Max. [2] Brace Spacing (ft.)	Brace [3] Reaction P (lbs)	Min. Brace Assembly E - Pages	Min. Brace Anchorage [6] Form Pour [4] Deck Page D1	Min. Brace Anchorage [6] Metal [5] Deck Page D2
				4-Way Splayed Brace Pattern (B30.4, B33.4)				
11.0	10	258	3/8	30	182	R38AAEM306	N2	L2
25.0	10	586	1/2	30	413	R12AAEM406	N5	L5
35.0	10	820	1/2	30	578	R12AAEM406	N6	L6
50.0	10	1,172	1/2	30	825	R12AAEM506	N9	L9
65.0	10	1,523	5/8	30	1,073	R58AAEM506	N11	L11
75.0	10	1,758	5/8	30	1,238	R58AAEM506	N13	L13
100.0	10	2,343	3/4	30	1,650	R34CFB2P12	N17	L17
125.0	10	2,929	3/4	30	2,063	R34DGB2P09	N21	L21
150.0	10	3,295	3/4	27	2,228	R34DGB2P09	N23	L23
175.0	10	3,417	3/4	22	2,118	R34DGB2P09	N22	L22
200.0	10	3,416	3/4	17	1,870	R34DGB2P09	N19	L19
225.0	10	3,404	3/4	13	1,609	R34CFB2P12	N17	L17

1. TVL = DL + Fv + ($0.2S_{DS}$/1.4 x Wp). All Terms Are Working Loads. Based On Eccentric Loading. 65% Of Total Load Allocated Per Rod.
2. Reductions In Actual Installed Brace Spacing Will Result In An Equal Percentage Reduction In Brace Reaction. As An Option When This Occurs ISAT May Substitute An Alternate Anchorage From Tables D1 or D2 Which Meets or Exceeds The Lowered Brace Reaction.
3. At Max. 50 Degree Brace Inclination.
4. Min. 3,000 psi NWC. Any "N Series" Connection May Be Utilized Having A Numeric Designation Equal To Or Higher Than That Shown.
5. Min. 3,000 psi NWC or LWC. Any "L Series" Connection May Be Utilized Having A Numeric Designation Equal To Or Higher Than That Shown.
6. As An Alternate, Brace Anchorage Connections To Structure May Be Employed Using Any Detail From Structural Connections Section "D" Series Details Where Assembly Design Value Meets Or Exceeds Brace Reaction.
7. For Trade Specific Bracing Installation Notes, Refer To Page 9.1.
8. Utilize Any "G" Series Vertical Support Connection Having A Design Value Equal To Or Greater Than The Corresponding "Rod Total Vertical Load".

REVIEWED FOR CODE COMPLIANCE BY: William Staehlin DATE: 01-26-2024 OPM-0403 HCAi CALIFORNIA BUILDING CODE

REGISTERED PROFESSIONAL ENGINEER MARCIN WASAZNIK S-6612 STRUCTURAL STATE OF CALIFORNIA

ISAT
A Division of Tomarco Contractor Specialties

International Seismic Application Technology
14848 Northam Street, La Mirada, CA 90638
877-999-4728 (Toll Free) 714-523-0845 (Fax)
www.isatsb.com

4-WAY SPLAYED RIGID BRACING REQUIREMENTS [7]:

ROD HUNG HVAC DUCT (Rectangular and 2-Rod Round) ***MAXIMUM SEISMIC DESIGN FORCE = 0.50 G's***

Requires Use of ISAT Seismic Brackets. Use of Any Non-ISAT Bracket Voids Engineering. 2013 California Building Code Compliant

Maximum Trapeze Load (lbs/lf)	Max. Vertical Support Spacing (ft.)	Rod [1] Total Vertical Load (lbs)	Min. [8] Vertical Support Rod Dia. (in.)	4-WAY SPLAYED RIGID BRACING REQUIREMENTS				
				Max. [2] Brace Spacing (ft.)	Brace [3] Reaction P (lbs)	Min. Brace Assembly E - Pages	Min. Brace Anchorage [6] Form Pour [4] Deck Page D1	Min. Brace Anchorage [6] Metal [5] Deck Page D2
				4-Way Splayed Brace Pattern (B30.4, B33.4)				
11.0	10	331	3/8	30	233	R38AAEM306	N3	L3
25.0	10	752	1/2	30	530	R12AAEM406	N6	L6
35.0	10	1,053	1/2	30	742	R12AAEM509	N8	L8
50.0	10	1,504	5/8	30	1,061	R58AAEM506	N11	L11
65.0	10	1,955	5/8	30	1,379	R58AAEM506	N14	L14
75.0	10	2,043	5/8	26	1,379	R58AAEM506	N14	L14
100.0	10	2,298	5/8	20	1,414	R58AAEM506	N15	L15
125.0	10	2,428	3/4	15	1,326	R34DGB1S06	N14	L14
150.0	10	2,701	3/4	13	1,379	R34DGB1S06	N14	L14
175.0	10	2,903	3/4	11	1,361	R34DGB1S06	N14	L14

1. TVL = DL + Fv + ($0.2S_{DS}$/1.4 x Wp). All Terms Are Working Loads. Based On Eccentric Loading. 65% Of Total Load Allocated Per Rod.
2. Reductions In Actual Installed Brace Spacing Will Result In An Equal Percentage Reduction In Brace Reaction. As An Option When This Occurs ISAT May Substitute An Alternate Anchorage From Tables D1 or D2 Which Meets or Exceeds The Lowered Brace Reaction.
3. At Max. 60 Degree Brace Inclination.
4. Min. 3,000 psi NWC. Any "N Series" Connection May Be Utilized Having A Numeric Designation Equal To Or Higher Than That Shown.
5. Min. 3,000 psi NWC or LWC. Any "L Series" Connection May Be Utilized Having A Numeric Designation Equal To Or Higher Than That Shown.
6. As An Alternate, Brace Anchorage Connections To Structure May Be Employed Using Any Detail From Structural Connections Section "D" Series Details Where Assembly Design Value Meets Or Exceeds Brace Reaction.
7. For Trade Specific Bracing Installation Notes, Refer To Page 9.1.
8. Utilize Any "G" Series Vertical Support Connection Having A Design Value Equal To Or Greater Than The Corresponding "Rod Total Vertical Load".

REVIEWED FOR CODE COMPLIANCE BY: HCAi OPM-0403 William Staehlin DATE: 01-26-2024 CALIFORNIA BUILDING CODE

REGISTERED PROFESSIONAL ENGINEER MARCIN WASAZNIK S-6612 STRUCTURAL STATE OF CALIFORNIA

ISAT
A Division of Tomarco Contractor Specialties

International Seismic Application Technology
14848 Northam Street, La Mirada, CA 90638
877-999-4728 (Toll Free) 714-523-0845 (Fax)
www.isatsb.com

Rev.1
11/19/18
Page
C23-0.5-60

4-WAY SPLAYED RIGID BRACING REQUIREMENTS [7]:

ROD HUNG HVAC DUCT (Rectangular and 2-Rod Round) ***MAXIMUM SEISMIC DESIGN FORCE = 0.75 G's***

Requires Use of ISAT Seismic Brackets. Use of Any Non-ISAT Bracket Voids Engineering. 2013 California Building Code Compliant

Maximum Trapeze Load (lbs/lf)	Max. Vertical Support Spacing (ft.)	Rod [1] Total Vertical Load (lbs)	Min. [8] Vertical Support Rod Dia. (in.)	4-WAY SPLAYED RIGID BRACING REQUIREMENTS				
				Max. [2] Brace Spacing (ft.)	Brace [3] Reaction P (lbs)	Min. Brace Assembly E - Pages	Min. Brace Anchorage [6] Form Pour [4] Deck Page D1	Min. Brace Anchorage [6] Metal [5] Deck Page D2
				4-Way Splayed Brace Pattern (B30.4, B33.4)				
11.0	10	214	3/8	30	202	R38AAEM306	N3	L3
25.0	10	486	1/2	30	459	R12AAEM406	N5	L5
35.0	10	680	1/2	30	643	R12AAEM406	N7	L7
50.0	10	971	1/2	30	919	R12AAEM506	N10	L10
65.0	10	1,240	1/2	29	1,154	R12AAEM506	N12	L12
75.0	10	1,324	1/2	25	1,148	R12AAEM506	N12	L12
100.0	10	1,552	5/8	19	1,164	R58AAEM506	N12	L12
125.0	10	1,763	5/8	15	1,148	R58AAEM506	N12	L12
150.0	10	1,955	5/8	12	1,102	R58AAEM506	N12	L12
175.0	10	2,219	5/8	11	1,179	R58AAEM506	N12	L12

1. TVL = DL + Fv + ($0.2S_{DS}$/1.4 x Wp). All Terms Are Working Loads. Based On Eccentric Loading. 65% Of Total Load Allocated Per Rod.
2. Reductions In Actual Installed Brace Spacing Will Result In An Equal Percentage Reduction In Brace Reaction. As An Option When This Occurs ISAT May Substitute An Alternate Anchorage From Tables D1 or D2 Which Meets or Exceeds The Lowered Brace Reaction.
3. At Max. 30 Degree Brace Inclination.
4. Min. 3,000 psi NWC. Any "N Series" Connection May Be Utilized Having A Numeric Designation Equal To Or Higher Than That Shown.
5. Min. 3,000 psi NWC or LWC. Any "L Series" Connection May Be Utilized Having A Numeric Designation Equal To Or Higher Than That Shown.
6. As An Alternate, Brace Anchorage Connections To Structure May Be Employed Using Any Detail From Structural Connections Section "D" Series Details Where Assembly Design Value Meets Or Exceeds Brace Reaction.
7. For Trade Specific Bracing Installation Notes, Refer To Page 9.1.
8. Utilize Any "G" Series Vertical Support Connection Having A Design Value Equal To Or Greater Than The Corresponding "Rod Total Vertical Load".

REVIEWED FOR CODE COMPLIANCE
HCAi
OPM-0403
BY: William Staehlin
DATE: 01-26-2024
CALIFORNIA BUILDING CODE

REGISTERED PROFESSIONAL ENGINEER
MARCIN WASAZNIK
S-6612
STRUCTURAL
STATE OF CALIFORNIA

ISAT
A Division of Tomarco Contractor Specialties

International Seismic Application Technology
14848 Northam Street, La Mirada, CA 90638
877-999-4728 (Toll Free) 714-523-0845 (Fax)
www.isatsb.com

Rev.1
11/19/18
Page
C23-0.75-30

4-WAY SPLAYED RIGID BRACING REQUIREMENTS [7] :

ROD HUNG HVAC DUCT (Rectangular and 2-Rod Round) **MAXIMUM SEISMIC DESIGN FORCE = 0.75 G's**

Requires Use of ISAT Seismic Brackets. Use of Any Non-ISAT Bracket Voids Engineering. 2013 California Building Code Compliant

Maximum Trapeze Load (lbs/lf)	Max. Vertical Support Spacing (ft.)	Rod [1] Total Vertical Load (lbs)	Min. [8] Vertical Support Rod Dia. (in.)	4-WAY SPLAYED RIGID BRACING REQUIREMENTS				
				Max. [2] Brace Spacing (ft.)	Brace [3] Reaction P (lbs)	Min. Brace Assembly E - Pages	Min. Brace Anchorage [6] Form Pour [4] Deck Page D1	Min. Brace Anchorage [6] Metal [5] Deck Page D2
				4-Way Splayed Brace Pattern (B30.4, B33.4)				
11.0	10	338	3/8	30	272	R38AAEM306	N3	L3
25.0	10	769	1/2	30	619	R12AAEM406	N7	L7
35.0	10	1,077	1/2	30	866	R12AAEM506	N9	L9
50.0	10	1,538	5/8	30	1,238	R58AAEM506	N13	L13
65.0	10	2,000	5/8	30	1,609	R58AAEM606	N17	L17
75.0	10	2,307	3/4	30	1,856	R34DGB2P09	N19	L19
100.0	10	2,857	3/4	27	2,228	R34DGB2P09	N23	L23
125.0	10	3,021	3/4	21	2,166	R34DGB2P09	N22	L22
150.0	10	3,295	3/4	18	2,228	R34DGB2P09	N23	L23
175.0	10	3,460	3/4	15	2,166	R34DGB2P09	N22	L22
200.0	10	3,368	3/4	11	1,815	R34DGB2P09	N19	L19

1. TVL = DL + Fv + ($0.2S_{DS}$/1.4 x Wp). All Terms Are Working Loads. Based On Eccentric Loading. 65% Of Total Load Allocated Per Rod.
2. Reductions In Actual Installed Brace Spacing Will Result In An Equal Percentage Reduction In Brace Reaction. As An Option When This Occurs ISAT May Substitute An Alternate Anchorage From Tables D1 or D2 Which Meets or Exceeds The Lowered Brace Reaction.
3. At Max. 50 Degree Brace Inclination.
4. Min. 3,000 psi NWC. Any "N Series" Connection May Be Utilized Having A Numeric Designation Equal To Or Higher Than That Shown.
5. Min. 3,000 psi NWC or LWC. Any "L Series" Connection May Be Utilized Having A Numeric Designation Equal To Or Higher Than That Shown.
6. As An Alternate, Brace Anchorage Connections To Structure May Be Employed Using Any Detail From Structural Connections Section "D" Series Details Where Assembly Design Value Meets Or Exceeds Brace Reaction.
7. For Trade Specific Bracing Installation Notes, Refer To Page 9.1.
8. Utilize Any "G" Series Vertical Support Connection Having A Design Value Equal To Or Greater Than The Corresponding "Rod Total Vertical Load".

REVIEWED FOR CODE COMPLIANCE
HCAi
OPM-0403
BY: William Staehlin
DATE: 01-26-2024
CALIFORNIA BUILDING CODE 2022

REGISTERED PROFESSIONAL ENGINEER
MARCIN WASAZNIK
S 6612
STRUCTURAL
STATE OF CALIFORNIA

ISAT
A Division of Tomarco Contractor Specialties

International Seismic Application Technology
14848 Northam Street, La Mirada, CA 90638
877-999-4728 (Toll Free) 714-523-0845 (Fax)
www.isatsb.com

Rev.1
11/19/18
Page
C23-0.75-45

4-WAY SPLAYED RIGID BRACING REQUIREMENTS [7]:

ROD HUNG HVAC DUCT (Rectangular and 2-Rod Round) ***MAXIMUM SEISMIC DESIGN FORCE = 0.75 G's***

Requires Use of ISAT Seismic Brackets. Use of Any Non-ISAT Bracket Voids Engineering. 2013 California Building Code Compliant

Maximum Trapeze Load (lbs/lf)	Max. Vertical Support Spacing (ft.)	Rod [1] Total Vertical Load (lbs)	Min. [8] Vertical Support Rod Dia. (in.)	4-WAY SPLAYED RIGID BRACING REQUIREMENTS				
				Max. [2] Brace Spacing (ft.)	Brace [3] Reaction P (lbs)	Min. Brace Assembly E - Pages	Min. Brace Anchorage [6] Form Pour [4] Deck Page D1	Min. Brace Anchorage [6] Metal [5] Deck Page D2
				4-Way Splayed Brace Pattern (B30.4, B33.4)				
11.0	10	448	3/8	30	350	R38AAEM406	N4	L4
25.0	10	1,018	1/2	30	795	R12AAEM506	N8	L8
35.0	10	1,426	5/8	30	1,114	R58AAEM506	N12	L12
50.0	10	1,824	5/8	26	1,379	R58AAEM506	N14	L14
65.0	10	1,955	5/8	20	1,379	R58AAEM506	N14	L14
75.0	10	2,096	5/8	18	1,432	R58AAEM506	N15	L15
100.0	10	2,262	5/8	13	1,379	R58AAEM506	N14	L14
125.0	10	2,428	3/4	10	1,326	R34DGB1S06	N14	L14

1. TVL = DL + Fv + ($0.2S_{DS}$/1.4 x Wp). All Terms Are Working Loads. Based On Eccentric Loading. 65% Of Total Load Allocated Per Rod.
2. Reductions In Actual Installed Brace Spacing Will Result In An Equal Percentage Reduction In Brace Reaction. As An Option When This Occurs ISAT May Substitute An Alternate Anchorage From Tables D1 or D2 Which Meets or Exceeds The Lowered Brace Reaction.
3. At Max. 60 Degree Brace Inclination.
4. Min. 3,000 psi NWC. Any "N Series" Connection May Be Utilized Having A Numeric Designation Equal To Or Higher Than That Shown.
5. Min. 3,000 psi NWC or LWC. Any "L Series" Connection May Be Utilized Having A Numeric Designation Equal To Or Higher Than That Shown.
6. As An Alternate, Brace Anchorage Connections To Structure May Be Employed Using Any Detail From Structural Connections Section "D" Series Details Where Assembly Design Value Meets Or Exceeds Brace Reaction.
7. For Trade Specific Bracing Installation Notes, Refer To Page 9.1.
8. Utilize Any "G" Series Vertical Support Connection Having A Design Value Equal To Or Greater Than The Corresponding "Rod Total Vertical Load".

REVIEWED FOR CODE COMPLIANCE
HCAi
OPM 0403
BY: William Staehlin
DATE: 01-26-2024
CALIFORNIA BUILDING CODE, 2013

REGISTERED PROFESSIONAL ENGINEER
MARCIN WASAZNIK
S 6612
STRUCTURAL
STATE OF CALIFORNIA

ISAT
A Division of Tomarco Contractor Specialties
International Seismic Application Technology
14848 Northam Street, La Mirada, CA 90638
877-999-4728 (Toll Free) 714-523-0845 (Fax)
www.isatsb.com

Rev.1
11/19/18
Page
C23-0.75-60

4-WAY SPLAYED RIGID BRACING REQUIREMENTS [7] :

ROD HUNG HVAC DUCT (Rectangular and 2-Rod Round) ***MAXIMUM SEISMIC DESIGN FORCE = 1.00 G's***

Requires Use of ISAT Seismic Brackets. Use of Any Non-ISAT Bracket Voids Engineering. 2013 California Building Code Compliant

Maximum Trapeze Load (lbs/lf)	Max. Vertical Support Spacing (ft.)	Rod [1] Total Vertical Load (lbs)	Min. [8] Vertical Support Rod Dia. (in.)	4-WAY SPLAYED RIGID BRACING REQUIREMENTS				
				Max. [2] Brace Spacing (ft.)	Brace [3] Reaction P (lbs)	Min. Brace Assembly E - Pages	Min. Brace Anchorage [6] Form Pour [4] Deck Page D1	Min. Brace Anchorage [6] Metal [5] Deck Page D2
				4-Way Splayed Brace Pattern (B30.4, B33.4)				
11.0	10	253	3/8	30	269	R38AAEM306	N3	L3
25.0	10	574	1/2	30	612	R12AAEM406	N7	L7
35.0	10	804	1/2	30	857	R12AAEM506	N9	L9
50.0	10	1,125	1/2	29	1,184	R12AAEM506	N12	L12
65.0	10	1,247	1/2	22	1,168	R12AAEM506	N12	L12
75.0	10	1,333	1/2	19	1,164	R12AAEM506	N12	L12
100.0	10	1,540	5/8	14	1,143	R58AAEM506	N12	L12
125.0	10	1,748	5/8	11	1,123	R58AAEM506	N12	L12
150.0	10	2,026	5/8	10	1,225	R58AAEM506	N13	L13

1. TVL = DL + Fv + ($0.2S_{DS}$/1.4 x Wp). All Terms Are Working Loads. Based On Eccentric Loading. 65% Of Total Load Allocated Per Rod.
2. Reductions In Actual Installed Brace Spacing Will Result In An Equal Percentage Reduction In Brace Reaction. As An Option When This Occurs ISAT May Substitute An Alternate Anchorage From Tables D1 or D2 Which Meets or Exceeds The Lowered Brace Reaction.
3. At Max. 30 Degree Brace Inclination.
4. Min. 3,000 psi NWC. Any "N Series" Connection May Be Utilized Having A Numeric Designation Equal To Or Higher Than That Shown.
5. Min. 3,000 psi NWC or LWC. Any "L Series" Connection May Be Utilized Having A Numeric Designation Equal To Or Higher Than That Shown.
6. As An Alternate, Brace Anchorage Connections To Structure May Be Employed Using Any Detail From Structural Connections Section "D" Series Details Where Assembly Design Value Meets Or Exceeds Brace Reaction.
7. For Trade Specific Bracing Installation Notes, Refer To Page 9.1.
8. Utilize Any "G" Series Vertical Support Connection Having A Design Value Equal To Or Greater Than The Corresponding "Rod Total Vertical Load".

REVIEWED FOR CODE COMPLIANCE BY: William Staehlin DATE: 01-26-2024 OPM-0403 HCAi CALIFORNIA BUILDING CODE

REGISTERED PROFESSIONAL ENGINEER MARCIN WASAZNIK S-6612 STRUCTURAL STATE OF CALIFORNIA

ISAT
A Division of Tomarco Contractor Specialties
International Seismic Application Technology
14848 Northam Street, La Mirada, CA 90638
877-999-4728 (Toll Free) 714-523-0845 (Fax)
www.isatsb.com

Rev.1
11/18/19
Page
C23-1-30

4-WAY SPLAYED RIGID BRACING REQUIREMENTS [7]:

ROD HUNG HVAC DUCT (Rectangular and 2-Rod Round) ***MAXIMUM SEISMIC DESIGN FORCE = 1.00 G's***

Requires Use of ISAT Seismic Brackets. Use of Any Non-ISAT Bracket Voids Engineering. 2013 California Building Code Compliant

Maximum Trapeze Load (lbs/lf)	Max. Vertical Support Spacing (ft.)	Rod [1] Total Vertical Load (lbs)	Min. [8] Vertical Support Rod Dia. (in.)	4-WAY SPLAYED RIGID BRACING REQUIREMENTS				
				Max. [2] Brace Spacing (ft.)	Brace [3] Reaction P (lbs)	Min. Brace Assembly E - Pages	Min. Brace Anchorage [6] Form Pour [4] Deck Page D1	Min. Brace Anchorage [6] Metal [5] Deck Page D2
				4-Way Splayed Brace Pattern (B30.4, B33.4)				
11.0	10	419	3/8	30	363	R38AAEM406	N4	L4
25.0	10	952	1/2	30	825	R12AAEM506	N9	L9
35.0	10	1,333	5/8	30	1,155	R58AAEM506	N12	L12
50.0	10	1,905	3/4	30	1,650	R34CFB2P12	N17	L17
65.0	10	2,476	3/4	30	2,145	R34DGB2P09	N22	L22
75.0	10	2,564	3/4	26	2,145	R34DGB2P09	N22	L22
100.0	10	2,832	3/4	20	2,200	R34DGB2P09	N23	L23
125.0	10	3,051	3/4	16	2,200	R34DGB2P09	N23	L23
150.0	10	3,222	3/4	13	2,145	R34DGB2P09	N22	L22
175.0	10	3,417	3/4	11	2,118	R34DGB2P09	N22	L22

1. TVL = DL + Fv + ($0.2S_{DS}$/1.4 x Wp). All Terms Are Working Loads. Based On Eccentric Loading. 65% Of Total Load Allocated Per Rod.
2. Reductions In Actual Installed Brace Spacing Will Result In An Equal Percentage Reduction In Brace Reaction. As An Option When This Occurs ISAT May Substitute An Alternate Anchorage From Tables D1 or D2 Which Meets or Exceeds The Lowered Brace Reaction.
3. At Max. 50 Degree Brace Inclination.
4. Min. 3,000 psi NWC. Any "N Series" Connection May Be Utilized Having A Numeric Designation Equal To Or Higher Than That Shown.
5. Min. 3,000 psi NWC or LWC. Any "L Series" Connection May Be Utilized Having A Numeric Designation Equal To Or Higher Than That Shown.
6. As An Alternate, Brace Anchorage Connections To Structure May Be Employed Using Any Detail From Structural Connections Section "D" Series Details Where Assembly Design Value Meets Or Exceeds Brace Reaction.
7. For Trade Specific Bracing Installation Notes, Refer To Page 9.1.
8. Utilize Any "G" Series Vertical Support Connection Having A Design Value Equal To Or Greater Than The Corresponding "Rod Total Vertical Load".

REVIEWED FOR CODE COMPLIANCE
HCAi
OPM-0403
BY: William Staehlin
DATE: 01-26-2024
CALIFORNIA BUILDING CODE

REGISTERED PROFESSIONAL ENGINEER
MARCIN WASAZNIK
S-6612
STRUCTURAL
STATE OF CALIFORNIA

ISAT
A Division of Tomarco Contractor Specialties

International Seismic Application Technology
14848 Northam Street, La Mirada, CA 90638
877-999-4728 (Toll Free) 714-523-0845 (Fax)
www.isatsb.com

Rev.1
11/19/18
Page
C23-1-45

4-WAY SPLAYED RIGID BRACING REQUIREMENTS [7]:

ROD HUNG HVAC DUCT (Rectangular and 2-Rod Round) ***MAXIMUM SEISMIC DESIGN FORCE = 1.00 G's***

Requires Use of ISAT Seismic Brackets. Use of Any Non-ISAT Bracket Voids Engineering. 2013 California Building Code Compliant

Maximum Trapeze Load (lbs/lf)	Max. Vertical Support Spacing (ft.)	Rod [1] Total Vertical Load (lbs)	Min. [8] Vertical Support Rod Dia. (in.)	4-WAY SPLAYED RIGID BRACING REQUIREMENTS				
				Max. [2] Brace Spacing (ft.)	Brace [3] Reaction P (lbs)	Min. Brace Assembly E - Pages	Min. Brace Anchorage [6] Form Pour [4] Deck Page D1	Min. Brace Anchorage [6] Metal [5] Deck Page D2
				4-Way Splayed Brace Pattern (B30.4, B33.4)				
11.0	10	565	1/2	30	467	R12AAEM406	N5	L5
25.0	10	1,285	5/8	30	1,061	R58AAEM506	N11	L11
35.0	10	1,699	5/8	28	1,386	R58AAEM506	N14	L14
50.0	10	1,859	5/8	20	1,414	R58AAEM506	N15	L15
65.0	10	1,955	5/8	15	1,379	R58AAEM506	N14	L14
75.0	10	2,043	5/8	13	1,379	R58AAEM506	N14	L14
100.0	10	2,298	5/8	10	1,414	R58AAEM506	N15	L15

1. TVL = DL + Fv + ($0.2S_{DS}$/1.4 x Wp). All Terms Are Working Loads. Based On Eccentric Loading. 65% Of Total Load Allocated Per Rod.
2. Reductions In Actual Installed Brace Spacing Will Result In An Equal Percentage Reduction In Brace Reaction. As An Option When This Occurs ISAT May Substitute An Alternate Anchorage From Tables D1 or D2 Which Meets or Exceeds The Lowered Brace Reaction.
3. At Max. 60 Degree Brace Inclination.
4. Min. 3,000 psi NWC. Any "N Series" Connection May Be Utilized Having A Numeric Designation Equal To Or Higher Than That Shown.
5. Min. 3,000 psi NWC or LWC. Any "L Series" Connection May Be Utilized Having A Numeric Designation Equal To Or Higher Than That Shown.
6. As An Alternate, Brace Anchorage Connections To Structure May Be Employed Using Any Detail From Structural Connections Section "D" Series Details Where Assembly Design Value Meets Or Exceeds Brace Reaction.
7. For Trade Specific Bracing Installation Notes, Refer To Page 9.1.
8. Utilize Any "G" Series Vertical Support Connection Having A Design Value Equal To Or Greater Than The Corresponding "Rod Total Vertical Load".

REVIEWED FOR CODE COMPLIANCE
HCAi
OPM 0403
BY: William Staehlin
DATE: 01-26-2024
CALIFORNIA BUILDING CODE, 2019

REGISTERED PROFESSIONAL ENGINEER MARCIN WASAZNIK S-6612 STRUCTURAL STATE OF CALIFORNIA

ISAT
A Division of Tomarco Contractor Specialties
International Seismic Application Technology
14848 Northam Street, La Mirada, CA 90638
877-999-4728 (Toll Free) 714-523-0845 (Fax)
www.isatsb.com

Rev.1
11/19/18
Page
C23-1-60

4-WAY SPLAYED CABLE BRACING REQUIREMENTS [7]:

ROD HUNG HVAC DUCT (RECTANGULAR and 2-ROD ROUND) ***MAXIMUM SEISMIC DESIGN FORCE = 0.25 G's***

Requires Use of ISAT Seismic Brackets. Use of Any Non-ISAT Bracket Voids Engineering. 2013 California Building Code Compliant

Maximum Trapeze Load (lbs/lf)	Max. Vertical Support Spacing (ft.)	Rod [1] Total Vertical Load (lbs)	Min.[8] Vertical Support Rod Dia. (in.)	4-WAY SPLAYED CABLE BRACING REQUIREMENTS				
				Max.[2] Brace Spacing (ft.)	Brace[3] Reaction P (lbs)	Min. Brace Assembly E - Pages	Min. Brace Anchorage [6] Form Pour [4] Deck Page D1	Min. Brace Anchorage [6] Metal [5] Deck Page D2
				4-Way Splayed Brace Pattern (B31.2, B34.2)				
11.0	10	97	3/8	30	135	C38AA04WS	N2	L2
25.0	10	219	1/2	30	306	C12AA04WS	N4	L4
35.0	10	307	1/2	30	429	C12AA04WS	N5	L5
50.0	10	439	1/2	30	612	C12AA04WS	N7	L7
65.0	10	570	1/2	30	796	C12AA06WS	N8	L8
75.0	10	658	1/2	30	919	C12AA06WS	N10	L10
100.0	10	878	1/2	29	1,184	C12AA06WS	N12	L12
125.0	10	1,097	1/2	23	1,174	C12AA06WS	N12	L12
150.0	10	1,316	1/2	19	1,164	C12AA06WS	N12	L12

1. TVL = DL + Fv + ($0.2S_{DS}$/1.4 x Wp). All Terms Are Working Loads. Based On Eccentric Loading. 65% Of Total Load Allocated Per Rod.
2. Reductions In Actual Installed Brace Spacing Will Result In An Equal Percentage Reduction In Brace Reaction. As An Option When This Occurs ISAT May Substitute An Alternate Anchorage From Tables D1 or D2 Which Meets or Exceeds The Lowered Brace Reaction.
3. At Max. 30 Degree Brace Inclination.
4. Min. 3,000 psi NWC. Any "N Series" Connection May Be Utilized Having A Numeric Designation Equal To Or Higher Than That Shown.
5. Min. 3,000 psi NWC or LWC. Any "L Series" Connection May Be Utilized Having A Numeric Designation Equal To Or Higher Than That Shown.
6. As An Alternate, Brace Anchorage Connections To Structure May Be Employed Using Any Detail From Structural Connections Section "D" Series Details Where Assembly Design Value Meets Or Exceeds Brace Reaction.
7. For Trade Specific Bracing Installation Notes, Refer To Page 9.1.
8. Utilize Any "G" Series Vertical Support Connection Having A Design Value Equal To Or Greater Than The Corresponding "Rod Total Vertical Load".

REVIEWED FOR CODE COMPLIANCE
HCAI
OPM-0403
BY: William Staehlin
DATE: 01-26-2024
CALIFORNIA BUILDING CODE

REGISTERED PROFESSIONAL ENGINEER
MARCIN WASAZNIK
S 6612
STRUCTURAL
STATE OF CALIFORNIA

ISAT
A Division of Tomarco Contractor Specialties

International Seismic Application Technology
14848 Northam Street, La Mirada, CA 90638
877-999-4728 (Toll Free) 714-523-0845 (Fax)
www.isatsb.com

Rev. 1
11/19/18
Page
C24-0.25-30

4-WAY SPLAYED CABLE BRACING REQUIREMENTS [7]:

ROD HUNG HVAC DUCT (RECTANGULAR and 2-ROD ROUND) — **MAXIMUM SEISMIC DESIGN FORCE = 0.25 G's**

Requires Use of ISAT Seismic Brackets. Use of Any Non-ISAT Bracket Voids Engineering. 2013 California Building Code Compliant

Maximum Trapeze Load (lbs/lf)	Max. Vertical Support Spacing (ft.)	Rod [1] Total Vertical Load (lbs)	Min.[8] Vertical Support Rod Dia. (in.)	4-WAY SPLAYED CABLE BRACING REQUIREMENTS				
				Max.[2] Brace Spacing (ft.)	Brace[3] Reaction P (lbs)	Min. Brace Assembly E - Pages	Min. Brace Anchorage [6] Form Pour[4] Deck Page D1	Min. Brace Anchorage [6] Metal[5] Deck Page D2
				4-Way Splayed Brace Pattern (B31.2, B34.2)				
11.0	10	97	3/8	30	182	C38AA04WS	N2	L2
25.0	10	219	1/2	30	413	C12AA04WS	N5	L5
35.0	10	307	1/2	30	578	C12AA04WS	N6	L6
50.0	10	439	1/2	30	825	C12AA06WS	N9	L9
65.0	10	570	1/2	30	1,073	C12AA06WS	N11	L11
75.0	10	658	1/2	30	1,238	C12AA06WS	N13	L13
100.0	10	878	5/8	30	1,650	C58DG06TS	N17	L17
125.0	10	1,097	5/8	26	1,788	C58DG06TS	N18	L18
150.0	10	1,316	5/8	22	1,815	C58DG06TS	N19	L19

1. TVL = DL + Fv + ($0.2S_{DS}$/1.4 x Wp). All Terms Are Working Loads. Based On Eccentric Loading. 65% Of Total Load Allocated Per Rod.
2. Reductions In Actual Installed Brace Spacing Will Result In An Equal Percentage Reduction In Brace Reaction. As An Option When This Occurs ISAT May Substitute An Alternate Anchorage From Tables D1 or D2 Which Meets or Exceeds The Lowered Brace Reaction.
3. At Max. 50 Degree Brace Inclination.
4. Min. 3,000 psi NWC. Any "N Series" Connection May Be Utilized Having A Numeric Designation Equal To Or Higher Than That Shown.
5. Min. 3,000 psi NWC or LWC. Any "L Series" Connection May Be Utilized Having A Numeric Designation Equal To Or Higher Than That Shown.
6. As An Alternate, Brace Anchorage Connections To Structure May Be Employed Using Any Detail From Structural Connections Section "D" Series Details Where Assembly Design Value Meets Or Exceeds Brace Reaction.
7. For Trade Specific Bracing Installation Notes, Refer To Page 9.1.
8. Utilize Any "G" Series Vertical Support Connection Having A Design Value Equal To Or Greater Than The Corresponding "Rod Total Vertical Load".

REVIEWED FOR CODE COMPLIANCE
HCAI
OPM-0403
By: William Staehlin
DATE: 01-26-2024
CALIFORNIA BUILDING CODE 2019

REGISTERED PROFESSIONAL ENGINEER
MARC/N WASAZNIK
S 6612
STRUCTURAL
STATE OF CALIFORNIA

ISAT
A Division of Tomarco Contractor Specialties

International Seismic Application Technology
14848 Northam Street, La Mirada, CA 90638
877-999-4728 (Toll Free) 714-523-0845 (Fax)
www.isatsb.com

Rev. 1
11/19/18
Page
C24-0.25-45

4-WAY SPLAYED CABLE BRACING REQUIREMENTS [7]:

ROD HUNG HVAC DUCT (RECTANGULAR and 2-ROD ROUND) ***MAXIMUM SEISMIC DESIGN FORCE = 0.25 G's***

Requires Use of ISAT Seismic Brackets. *Use of Any Non-ISAT Bracket Voids Engineering.* *2013 California Building Code Compliant*

Maximum Trapeze Load (lbs/lf)	Max. Vertical Support Spacing (ft.)	Rod [1] Total Vertical Load (lbs)	Min.[8] Vertical Support Rod Dia. (in.)	4-WAY SPLAYED CABLE BRACING REQUIREMENTS				
				Max.[2] Brace Spacing (ft.)	Brace[3] Reaction P (lbs)	Min. Brace Assembly Page E3	Min. Brace Anchorage [6] Form Pour [4] Deck Page D1	Min. Brace Anchorage [6] Metal [5] Deck Page D2
				4-Way Splayed Brace Pattern (B31.2, B34.2)				
11.0	10	97	3/8	30	233	C38AA04WS	N3	L3
25.0	10	219	1/2	30	530	C12AA04WS	N6	L6
35.0	10	307	1/2	30	742	C12AA06WS	N8	L8
50.0	10	439	1/2	30	1,061	C12AA06WS	N11	L11
65.0	10	570	5/8	30	1,379	C58AA06WS	N14	L14
75.0	10	658	5/8	26	1,379	C58AA06WS	N14	L14
100.0	10	878	5/8	20	1,414	C58AA06WS	N15	L15
125.0	10	1,097	5/8	16	1,414	C58AA06WS	N15	L15
150.0	10	1,316	5/8	13	1,379	C58AA06WS	N14	L14

1. TVL = DL + Fv + ($0.2S_{DS}$/1.4 x Wp). All Terms Are Working Loads. Based On Eccentric Loading. 65% Of Total Load Allocated Per Rod.
2. Reductions In Actual Installed Brace Spacing Will Result In An Equal Percentage Reduction In Brace Reaction. As An Option When This Occurs ISAT May Substitute An Alternate Anchorage From Tables D1 or D2 Which Meets or Exceeds The Lowered Brace Reaction.
3. At Max. 60 Degree Brace Inclination.
4. Min. 3,000 psi NWC. Any "N Series" Connection May Be Utilized Having A Numeric Designation Equal To Or Higher Than That Shown.
5. Min. 3,000 psi NWC or LWC. Any "L Series" Connection May Be Utilized Having A Numeric Designation Equal To Or Higher Than That Shown.
6. As An Alternate, Brace Anchorage Connections To Structure May Be Employed Using Any Detail From Structural Connections Section "D" Series Details Where Assembly Design Value Meets Or Exceeds Brace Reaction.
7. For Trade Specific Bracing Installation Notes, Refer To Page 9.1.
8. Utilize Any "G" Series Vertical Support Connection Having A Design Value Equal To Or Greater Than The Corresponding "Rod Total Vertical Load".

REVIEWED FOR CODE COMPLIANCE
HCAI
OPM-0403
By: William Staehlin
DATE: 01-26-2024
CALIFORNIA BUILDING CODE 2019

REGISTERED PROFESSIONAL ENGINEER
MARC/N WASAZNIK
S 6612
STRUCTURAL
STATE OF CALIFORNIA

ISAT
A Division of Tomarco Contractor Specialties

International Seismic Application Technology
14848 Northam Street, La Mirada, CA 90638
877-999-4728 (Toll Free) 714-523-0845 (Fax)
www.isatsb.com

Rev. 1
11/19/18
Page
C24-0.25-60

4-WAY SPLAYED CABLE BRACING REQUIREMENTS [7]:

ROD HUNG HVAC DUCT (RECTANGULAR and 2-ROD ROUND) ***MAXIMUM SEISMIC DESIGN FORCE = 0.50 G's***

Requires Use of ISAT Seismic Brackets. *Use of Any Non-ISAT Bracket Voids Engineering.* *2013 California Building Code Compliant*

Maximum Trapeze Load (lbs/lf)	Max. Vertical Support Spacing (ft.)	Rod [1] Total Vertical Load (lbs)	Min.[8] Vertical Support Rod Dia. (in.)	4-WAY SPLAYED CABLE BRACING REQUIREMENTS				
				Max.[2] Brace Spacing (ft.)	Brace[3] Reaction P (lbs)	Min. Brace Assembly E - Pages	Min. Brace Anchorage [6] Form Pour [4] Deck Page D1	Min. Brace Anchorage [6] Metal [5] Deck Page D2
				4-Way Splayed Brace Pattern (B31.2, B34.2)				
11.0	10	97	3/8	30	269	C38AA04WS	N3	L3
25.0	10	219	1/2	30	612	C12AA04WS	N7	L7
35.0	10	307	1/2	30	857	C12AA06WS	N9	L9
50.0	10	439	1/2	29	1,184	C12AA06WS	N12	L12
65.0	10	570	1/2	22	1,168	C12AA06WS	N12	L12
75.0	10	658	1/2	19	1,164	C12AA06WS	N12	L12
100.0	10	878	1/2	14	1,143	C12AA06WS	N12	L12
125.0	10	1,097	1/2	11	1,123	C12AA06WS	N12	L12
150.0	10	1,316	1/2	10	1,225	C12AA06WS	N13	L13

1. TVL = DL + Fv + ($0.2S_{DS}$/1.4 x Wp). All Terms Are Working Loads. Based On Eccentric Loading. 65% Of Total Load Allocated Per Rod.
2. Reductions In Actual Installed Brace Spacing Will Result In An Equal Percentage Reduction In Brace Reaction. As An Option When This Occurs ISAT May Substitute An Alternate Anchorage From Tables D1 or D2 Which Meets or Exceeds The Lowered Brace Reaction.
3. At Max. 30 Degree Brace Inclination.
4. Min. 3,000 psi NWC. Any "N Series" Connection May Be Utilized Having A Numeric Designation Equal To Or Higher Than That Shown.
5. Min. 3,000 psi NWC or LWC. Any "L Series" Connection May Be Utilized Having A Numeric Designation Equal To Or Higher Than That Shown.
6. As An Alternate, Brace Anchorage Connections To Structure May Be Employed Using Any Detail From Structural Connections Section "D" Series Details Where Assembly Design Value Meets Or Exceeds Brace Reaction.
7. For Trade Specific Bracing Installation Notes, Refer To Page 9.1.
8. Utilize Any "G" Series Vertical Support Connection Having A Design Value Equal To Or Greater Than The Corresponding "Rod Total Vertical Load".

REVIEWED FOR CODE COMPLIANCE
HCAI
OPM-0403
By: William Staehlin
DATE: 01-26-2024
CALIFORNIA BUILDING CODE 2019

REGISTERED PROFESSIONAL ENGINEER
MARC/N WASAZNIK
S 6612
STRUCTURAL
STATE OF CALIFORNIA

ISAT
A Division of Tomarco Contractor Specialties

International Seismic Application Technology
14848 Northam Street, La Mirada, CA 90638
877-999-4728 (Toll Free) 714-523-0845 (Fax)
www.isatsb.com

Rev. 1
11/19/18
Page
C24-0.5-30

4-WAY SPLAYED CABLE BRACING REQUIREMENTS [7]:

ROD HUNG HVAC DUCT (RECTANGULAR and 2-ROD ROUND) ***MAXIMUM SEISMIC DESIGN FORCE = 0.50 G's***

Requires Use of ISAT Seismic Brackets. *Use of Any Non-ISAT Bracket Voids Engineering.* *2013 California Building Code Compliant*

Maximum Trapeze Load (lbs/lf)	Max. Vertical Support Spacing (ft.)	Rod [1] Total Vertical Load (lbs)	Min.[8] Vertical Support Rod Dia. (in.)	4-WAY SPLAYED CABLE BRACING REQUIREMENTS				
				Max.[2] Brace Spacing (ft.)	Brace[3] Reaction P (lbs)	Min. Brace Assembly E - Pages	Min. Brace Anchorage [6] Form Pour [4] Deck Page D1	Min. Brace Anchorage [6] Metal [5] Deck Page D2
				4-Way Splayed Brace Pattern (B31.2, B34.2)				
11.0	10	97	3/8	30	363	C38AA04WS	N4	L4
25.0	10	219	1/2	30	825	C12AA06WS	N9	L9
35.0	10	307	1/2	30	1,155	C12AA06WS	N12	L12
50.0	10	439	5/8	30	1,650	C58DG06TS	N17	L17
65.0	10	570	5/8	24	1,716	C58DG06TS	N18	L18
75.0	10	658	5/8	22	1,815	C58DG06TS	N19	L19
100.0	10	878	5/8	16	1,760	C58DG06TS	N18	L18
125.0	10	1,097	5/8	13	1,788	C58DG06TS	N18	L18
150.0	10	1,316	5/8	11	1,815	C58DG06TS	N19	L19

1. TVL = DL + Fv + ($0.2S_{DS}$/1.4 x Wp). All Terms Are Working Loads. Based On Eccentric Loading. 65% Of Total Load Allocated Per Rod.
2. Reductions In Actual Installed Brace Spacing Will Result In An Equal Percentage Reduction In Brace Reaction. As An Option When This Occurs ISAT May Substitute An Alternate Anchorage From Tables D1 or D2 Which Meets or Exceeds The Lowered Brace Reaction.
3. At Max. 50 Degree Brace Inclination.
4. Min. 3,000 psi NWC. Any "N Series" Connection May Be Utilized Having A Numeric Designation Equal To Or Higher Than That Shown.
5. Min. 3,000 psi NWC or LWC. Any "L Series" Connection May Be Utilized Having A Numeric Designation Equal To Or Higher Than That Shown.
6. As An Alternate, Brace Anchorage Connections To Structure May Be Employed Using Any Detail From Structural Connections Section "D" Series Details Where Assembly Design Value Meets Or Exceeds Brace Reaction.
7. For Trade Specific Bracing Installation Notes, Refer To Page 9.1.
8. Utilize Any "G" Series Vertical Support Connection Having A Design Value Equal To Or Greater Than The Corresponding "Rod Total Vertical Load".

REVIEWED FOR CODE COMPLIANCE
HCAI
OPM-0403
BY: William Staehlin
DATE: 01-26-2024
CALIFORNIA BUILDING CODE 2019

REGISTERED PROFESSIONAL ENGINEER
MARC/N WASAZNIK
S 6612
STRUCTURAL
STATE OF CALIFORNIA

ISAT
A Division of Tomarco Contractor Specialties

International Seismic Application Technology
14848 Northam Street, La Mirada, CA 90638
877-999-4728 (Toll Free) 714-523-0845 (Fax)
www.isatsb.com

Rev. 1
11/19/18
Page
C24-0.5-45

4-WAY SPLAYED CABLE BRACING REQUIREMENTS [7]:

ROD HUNG HVAC DUCT (RECTANGULAR and 2-ROD ROUND) ***MAXIMUM SEISMIC DESIGN FORCE = 0.50 G's***

Requires Use of ISAT Seismic Brackets. *Use of Any Non-ISAT Bracket Voids Engineering.* *2013 California Building Code Compliant*

Maximum Trapeze Load (lbs/lf)	Max. Vertical Support Spacing (ft.)	Rod [1] Total Vertical Load (lbs)	Min.[8] Vertical Support Rod Dia. (in.)	4-WAY SPLAYED CABLE BRACING REQUIREMENTS				
				Max. [2] Brace Spacing (ft.)	Brace [3] Reaction P (lbs)	Min. Brace Assembly Page E3	Min. Brace Anchorage [6] Form Pour [4] Deck Page D1	Min. Brace Anchorage [6] Metal [5] Deck Page D2
				4-Way Splayed Brace Pattern (B31.2, B34.2)				
11.0	10	97	1/2	30	467	C12AA04WS	N5	L5
25.0	10	219	1/2	30	1,061	C12AA06WS	N11	L11
35.0	10	307	5/8	29	1,435	C58AA06WS	N15	L15
50.0	10	439	5/8	20	1,414	C58AA06WS	N15	L15
65.0	10	570	5/8	16	1,471	C58AA06WS	N15	L15
75.0	10	658	5/8	13	1,379	C58AA06WS	N14	L14
100.0	10	878	5/8	10	1,414	C58AA06WS	N15	L15

1. TVL = DL + Fv + ($0.2S_{DS}$/1.4 x Wp). All Terms Are Working Loads. Based On Eccentric Loading. 65% Of Total Load Allocated Per Rod.
2. Reductions In Actual Installed Brace Spacing Will Result In An Equal Percentage Reduction In Brace Reaction. As An Option When This Occurs ISAT May Substitute An Alternate Anchorage From Tables D1 or D2 Which Meets or Exceeds The Lowered Brace Reaction.
3. At Max. 60 Degree Brace Inclination.
4. Min. 3,000 psi NWC. Any "N Series" Connection May Be Utilized Having A Numeric Designation Equal To Or Higher Than That Shown.
5. Min. 3,000 psi NWC or LWC. Any "L Series" Connection May Be Utilized Having A Numeric Designation Equal To Or Higher Than That Shown.
6. As An Alternate, Brace Anchorage Connections To Structure May Be Employed Using Any Detail From Structural Connections Section "D" Series Details Where Assembly Design Value Meets Or Exceeds Brace Reaction.
7. For Trade Specific Bracing Installation Notes, Refer To Page 9.1.
8. Utilize Any "G" Series Vertical Support Connection Having A Design Value Equal To Or Greater Than The Corresponding "Rod Total Vertical Load".

REVIEWED FOR CODE COMPLIANCE
HCAI
OPM-0403
BY: William Staehlin
DATE: 01-26-2024
CALIFORNIA BUILDING CODE, 2019

REGISTERED PROFESSIONAL ENGINEER MARCIN WASAZNIK S-6612 STRUCTURAL STATE OF CALIFORNIA

ISAT
A Division of Tomarco Contractor Specialties
International Seismic Application Technology
14848 Northam Street, La Mirada, CA 90638
877-999-4728 (Toll Free) 714-523-0845 (Fax)
www.isatsb.com

Rev. 1
11/19/18
Page
C24-0.5-60

4-WAY SPLAYED CABLE BRACING REQUIREMENTS [7]:

ROD HUNG HVAC DUCT (RECTANGULAR and 2-ROD ROUND) ***MAXIMUM SEISMIC DESIGN FORCE = 0.75 G's***

Requires Use of ISAT Seismic Brackets. *Use of Any Non-ISAT Bracket Voids Engineering.* *2013 California Building Code Compliant*

Maximum Trapeze Load (lbs/lf)	Max. Vertical Support Spacing (ft.)	Rod [1] Total Vertical Load (lbs)	Min.[8] Vertical Support Rod Dia. (in.)	4-WAY SPLAYED CABLE BRACING REQUIREMENTS				
				Max.[2] Brace Spacing (ft.)	Brace[3] Reaction P (lbs)	Min. Brace Assembly E - Pages	Min. Brace Anchorage [6] Form Pour [4] Deck Page D1	Min. Brace Anchorage [6] Metal [5] Deck Page D2
				4-Way Splayed Brace Pattern (B31.2, B34.2)				
11.0	10	97	3/8	30	404	C38AA04WS	N5	L5
25.0	10	219	1/2	30	919	C12AA06WS	N10	L10
35.0	10	307	1/2	27	1,157	C12AA06WS	N12	L12
50.0	10	439	1/2	19	1,164	C12AA06WS	N12	L12
65.0	10	570	1/2	14	1,115	C12AA06WS	N12	L12
75.0	10	658	1/2	12	1,102	C12AA06WS	N12	L12
100.0	10	878	1/2	10	1,225	C12AA06WS	N13	L13

1. TVL = DL + Fv + ($0.2S_{DS}$/1.4 x Wp). All Terms Are Working Loads. Based On Eccentric Loading. 65% Of Total Load Allocated Per Rod.
2. Reductions In Actual Installed Brace Spacing Will Result In An Equal Percentage Reduction In Brace Reaction. As An Option When This Occurs ISAT May Substitute An Alternate Anchorage From Tables D1 or D2 Which Meets or Exceeds The Lowered Brace Reaction.
3. At Max. 30 Degree Brace Inclination.
4. Min. 3,000 psi NWC. Any "N Series" Connection May Be Utilized Having A Numeric Designation Equal To Or Higher Than That Shown.
5. Min. 3,000 psi NWC or LWC. Any "L Series" Connection May Be Utilized Having A Numeric Designation Equal To Or Higher Than That Shown.
6. As An Alternate, Brace Anchorage Connections To Structure May Be Employed Using Any Detail From Structural Connections Section "D" Series Details Where Assembly Design Value Meets Or Exceeds Brace Reaction.
7. For Trade Specific Bracing Installation Notes, Refer To Page 9.1.
8. Utilize Any "G" Series Vertical Support Connection Having A Design Value Equal To Or Greater Than The Corresponding "Rod Total Vertical Load".

REVIEWED FOR CODE COMPLIANCE
HCAI
OPM-0403
BY: William Staehlin
DATE: 01-26-2024
CALIFORNIA BUILDING CODE, 2019

REGISTERED PROFESSIONAL ENGINEER MARCIN WASAZNIK S-6612 STRUCTURAL STATE OF CALIFORNIA

ISAT
A Division of Tomarco Contractor Specialties
International Seismic Application Technology
14848 Northam Street, La Mirada, CA 90638
877-999-4728 (Toll Free) 714-523-0845 (Fax)
www.isatsb.com

Rev. 1
11/19/18
Page
C24-0.75-30

4-WAY SPLAYED CABLE BRACING REQUIREMENTS [7]:

ROD HUNG HVAC DUCT (RECTANGULAR and 2-ROD ROUND) ***MAXIMUM SEISMIC DESIGN FORCE = 0.75 G's***

Requires Use of ISAT Seismic Brackets. Use of Any Non-ISAT Bracket Voids Engineering. 2013 California Building Code Compliant

Maximum Trapeze Load (lbs/lf)	Max. Vertical Support Spacing (ft.)	Rod [1] Total Vertical Load (lbs)	Min.[8] Vertical Support Rod Dia. (in.)	4-WAY SPLAYED CABLE BRACING REQUIREMENTS				
				Max. [2] Brace Spacing (ft.)	Brace [3] Reaction P (lbs)	Min. Brace Assembly E - Pages	Min. Brace Anchorage [6] Form Pour [4] Deck Page D1	Min. Brace Anchorage [6] Metal [5] Deck Page D2
				4-Way Splayed Brace Pattern (B31.2, B34.2)				
11.0	10	97	1/2	30	545	C12AA04WS	N6	L6
25.0	10	219	1/2	30	1,238	C12AA06WS	N13	L13
35.0	10	307	5/8	30	1,733	C58DG06TS	N18	L18
50.0	10	439	5/8	22	1,815	C58DG06TS	N19	L19
65.0	10	570	5/8	17	1,823	C58DG06TS	N19	L19
75.0	10	658	5/8	14	1,733	C58DG06TS	N18	L18
100.0	10	878	5/8	11	1,815	C58DG06TS	N19	L19

1. TVL = DL + Fv + ($0.2S_{DS}$/1.4 x Wp). All Terms Are Working Loads. Based On Eccentric Loading. 65% Of Total Load Allocated Per Rod.
2. Reductions In Actual Installed Brace Spacing Will Result In An Equal Percentage Reduction In Brace Reaction. As An Option When This Occurs ISAT May Substitute An Alternate Anchorage From Tables D1 or D2 Which Meets or Exceeds The Lowered Brace Reaction.
3. At Max. 50 Degree Brace Inclination.
4. Min. 3,000 psi NWC. Any "N Series" Connection May Be Utilized Having A Numeric Designation Equal To Or Higher Than That Shown.
5. Min. 3,000 psi NWC or LWC. Any "L Series" Connection May Be Utilized Having A Numeric Designation Equal To Or Higher Than That Shown.
6. As An Alternate, Brace Anchorage Connections To Structure May Be Employed Using Any Detail From Structural Connections Section "D" Series Details Where Assembly Design Value Meets Or Exceeds Brace Reaction.
7. For Trade Specific Bracing Installation Notes, Refer To Page 9.1.
8. Utilize Any "G" Series Vertical Support Connection Having A Design Value Equal To Or Greater Than The Corresponding "Rod Total Vertical Load".

REVIEWED FOR CODE COMPLIANCE
HCAI
OPM-0403
BY: William Staehlin
DATE: 01-26-2024
CALIFORNIA BUILDING CODE, 2019

REGISTERED PROFESSIONAL ENGINEER
MARCIN WASAZNIK
S 6612
STRUCTURAL
STATE OF CALIFORNIA

ISAT
A Division of Tomarco Contractor Specialties

International Seismic Application Technology
14848 Northam Street, La Mirada, CA 90638
877-999-4728 (Toll Free) 714-523-0845 (Fax)
www.isatsb.com

Rev. 1
11/19/18
Page
C24-0.75-45

4-WAY SPLAYED CABLE BRACING REQUIREMENTS [7]:

ROD HUNG HVAC DUCT (RECTANGULAR and 2-ROD ROUND) ***MAXIMUM SEISMIC DESIGN FORCE = 0.75 G's***

Requires Use of ISAT Seismic Brackets. Use of Any Non-ISAT Bracket Voids Engineering. 2013 California Building Code Compliant

Maximum Trapeze Load (lbs/lf)	Max. Vertical Support Spacing (ft.)	Rod [1] Total Vertical Load (lbs)	Min.[8] Vertical Support Rod Dia. (in.)	4-WAY SPLAYED CABLE BRACING REQUIREMENTS				
				Max. [2] Brace Spacing (ft.)	Brace [3] Reaction P (lbs)	Min. Brace Assembly Page E3	Min. Brace Anchorage [6] Form Pour [4] Deck Page D1	Min. Brace Anchorage [6] Metal [5] Deck Page D2
				4-Way Splayed Brace Pattern (B31.2, B34.2)				
11.0	10	97	1/2	30	700	C12AA06WS	N8	L8
25.0	10	219	5/8	27	1,432	C58AA06WS	N15	L15
35.0	10	307	5/8	19	1,411	C58AA06WS	N15	L15
50.0	10	439	5/8	13	1,379	C58AA06WS	N14	L14
65.0	10	570	5/8	10	1,379	C58AA06WS	N14	L14

1. TVL = DL + Fv + ($0.2S_{DS}$/1.4 x Wp). All Terms Are Working Loads. Based On Eccentric Loading. 65% Of Total Load Allocated Per Rod.
2. Reductions In Actual Installed Brace Spacing Will Result In An Equal Percentage Reduction In Brace Reaction. As An Option When This Occurs ISAT May Substitute An Alternate Anchorage From Tables D1 or D2 Which Meets or Exceeds The Lowered Brace Reaction.
3. At Max. 60 Degree Brace Inclination.
4. Min. 3,000 psi NWC. Any "N Series" Connection May Be Utilized Having A Numeric Designation Equal To Or Higher Than That Shown.
5. Min. 3,000 psi NWC or LWC. Any "L Series" Connection May Be Utilized Having A Numeric Designation Equal To Or Higher Than That Shown.
6. As An Alternate, Brace Anchorage Connections To Structure May Be Employed Using Any Detail From Structural Connections Section "D" Series Details Where Assembly Design Value Meets Or Exceeds Brace Reaction.
7. For Trade Specific Bracing Installation Notes, Refer To Page 9.1.
8. Utilize Any "G" Series Vertical Support Connection Having A Design Value Equal To Or Greater Than The Corresponding "Rod Total Vertical Load".

REVIEWED FOR CODE COMPLIANCE
HCAI
OPM-0403
BY: William Staehlin
DATE: 01-26-2024
CALIFORNIA BUILDING CODE, 2019

REGISTERED PROFESSIONAL ENGINEER MARCIN WASAZNIK S 6612 STRUCTURAL STATE OF CALIFORNIA

ISAT
A Division of Tomarco Contractor Specialties

International Seismic Application Technology
14848 Northam Street, La Mirada, CA 90638
877-999-4728 (Toll Free) 714-523-0845 (Fax)
www.isatsb.com

Rev. 1
11/19/18
Page
C24-0.75-60

4-WAY SPLAYED CABLE BRACING REQUIREMENTS [7]:

ROD HUNG HVAC DUCT (RECTANGULAR and 2-ROD ROUND) ***MAXIMUM SEISMIC DESIGN FORCE = 1.00 G's***

Requires Use of ISAT Seismic Brackets. Use of Any Non-ISAT Bracket Voids Engineering. 2013 California Building Code Compliant

Maximum Trapeze Load (lbs/lf)	Max. Vertical Support Spacing (ft.)	Rod [1] Total Vertical Load (lbs)	Min. [8] Vertical Support Rod Dia. (in.)	4-WAY SPLAYED CABLE BRACING REQUIREMENTS				
				Max. [2] Brace Spacing (ft.)	Brace [3] Reaction P (lbs)	Min. Brace Assembly E - Pages	Min. Brace Anchorage [6] Form Pour [4] Deck Page D1	Min. Brace Anchorage [6] Metal [5] Deck Page D2
				4-Way Splayed Brace Pattern (B31.2, B34.2)				
11.0	10	97	3/8	30	539	C38AA04WS	N6	L6
25.0	10	219	1/2	29	1,184	C12AA06WS	N12	L12
35.0	10	307	1/2	20	1,143	C12AA06WS	N12	L12
50.0	10	439	1/2	14	1,143	C12AA06WS	N12	L12
65.0	10	570	1/2	11	1,168	C12AA06WS	N12	L12

1. TVL = DL + Fv + ($0.2S_{DS}$/1.4 x Wp). All Terms Are Working Loads. Based On Eccentric Loading. 65% Of Total Load Allocated Per Rod.
2. Reductions In Actual Installed Brace Spacing Will Result In An Equal Percentage Reduction In Brace Reaction. As An Option When This Occurs ISAT May Substitute An Alternate Anchorage From Tables D1 or D2 Which Meets or Exceeds The Lowered Brace Reaction.
3. At Max. 30 Degree Brace Inclination.
4. Min. 3,000 psi NWC. Any "N Series" Connection May Be Utilized Having A Numeric Designation Equal To Or Higher Than That Shown.
5. Min. 3,000 psi NWC or LWC. Any "L Series" Connection May Be Utilized Having A Numeric Designation Equal To Or Higher Than That Shown.
6. As An Alternate, Brace Anchorage Connections To Structure May Be Employed Using Any Detail From Structural Connections Section "D" Series Details Where Assembly Design Value Meets Or Exceeds Brace Reaction.
7. For Trade Specific Bracing Installation Notes, Refer To Page 9.1.
8. Utilize Any "G" Series Vertical Support Connection Having A Design Value Equal To Or Greater Than The Corresponding "Rod Total Vertical Load".

REVIEWED FOR CODE COMPLIANCE
HCAI
OPM-0403
BY: William Staehlin
DATE: 01-26-2024
CALIFORNIA BUILDING CODE, 2013

REGISTERED PROFESSIONAL ENGINEER
MARCIN WASAZNIK
S 6612
STRUCTURAL
STATE OF CALIFORNIA

ISAT
A Division of Tomarco Contractor Specialties

International Seismic Application Technology
14848 Northam Street, La Mirada, CA 90638
877-999-4728 (Toll Free) 714-523-0845 (Fax)
www.isatsb.com

Rev. 1
11/19/18
Page
C24-1-30

4-WAY SPLAYED CABLE BRACING REQUIREMENTS [7]:

ROD HUNG HVAC DUCT (RECTANGULAR and 2-ROD ROUND) ***MAXIMUM SEISMIC DESIGN FORCE = 1.00 G's***

Requires Use of ISAT Seismic Brackets. Use of Any Non-ISAT Bracket Voids Engineering. 2013 California Building Code Compliant

Maximum Trapeze Load (lbs/lf)	Max. Vertical Support Spacing (ft.)	Rod [1] Total Vertical Load (lbs)	Min. [8] Vertical Support Rod Dia. (in.)	4-WAY SPLAYED CABLE BRACING REQUIREMENTS				
				Max. [2] Brace Spacing (ft.)	Brace [3] Reaction P (lbs)	Min. Brace Assembly E - Pages	Min. Brace Anchorage [6] Form Pour [4] Deck Page D1	Min. Brace Anchorage [6] Metal [5] Deck Page D2
				4-Way Splayed Brace Pattern (B31.2, B34.2)				
11.0	10	97	1/2	30	726	C12AA06WS	N8	L8
25.0	10	219	5/8	30	1,650	C58DG06TS	N17	L17
35.0	10	307	5/8	23	1,771	C58DG06TS	N18	L18
50.0	10	439	5/8	16	1,760	C58DG06TS	N18	L18
65.0	10	570	5/8	12	1,716	C58DG06TS	N18	L18
75.0	10	658	5/8	11	1,815	C58DG06TS	N19	L19

1. TVL = DL + Fv + ($0.2S_{DS}$/1.4 x Wp). All Terms Are Working Loads. Based On Eccentric Loading. 65% Of Total Load Allocated Per Rod.
2. Reductions In Actual Installed Brace Spacing Will Result In An Equal Percentage Reduction In Brace Reaction. As An Option When This Occurs ISAT May Substitute An Alternate Anchorage From Tables D1 or D2 Which Meets or Exceeds The Lowered Brace Reaction.
3. At Max. 50 Degree Brace Inclination.
4. Min. 3,000 psi NWC. Any "N Series" Connection May Be Utilized Having A Numeric Designation Equal To Or Higher Than That Shown.
5. Min. 3,000 psi NWC or LWC. Any "L Series" Connection May Be Utilized Having A Numeric Designation Equal To Or Higher Than That Shown.
6. As An Alternate, Brace Anchorage Connections To Structure May Be Employed Using Any Detail From Structural Connections Section "D" Series Details Where Assembly Design Value Meets Or Exceeds Brace Reaction.
7. For Trade Specific Bracing Installation Notes, Refer To Page 9.1.
8. Utilize Any "G" Series Vertical Support Connection Having A Design Value Equal To Or Greater Than The Corresponding "Rod Total Vertical Load".

REVIEWED FOR CODE COMPLIANCE
HCAI
OPM-0403
BY: William Staehlin
DATE: 01-26-2024
CALIFORNIA BUILDING CODE, 2019

REGISTERED PROFESSIONAL ENGINEER
MARCIN WASAZNIK
S 6612
STRUCTURAL
STATE OF CALIFORNIA

ISAT
A Division of Tomarco Contractor Specialties
International Seismic Application Technology
14848 Northam Street, La Mirada, CA 90638
877-999-4728 (Toll Free) 714-523-0845 (Fax)
www.isatsb.com

Rev. 1
11/19/18
Page
C24-1-45

4-WAY SPLAYED CABLE BRACING REQUIREMENTS [7]:

ROD HUNG HVAC DUCT (RECTANGULAR and 2-ROD ROUND) ***MAXIMUM SEISMIC DESIGN FORCE = 1.00 G's***

Requires Use of ISAT Seismic Brackets. Use of Any Non-ISAT Bracket Voids Engineering. 2013 California Building Code Compliant

Maximum Trapeze Load (lbs/lf)	Max. Vertical Support Spacing (ft.)	Rod [1] Total Vertical Load (lbs)	Min. [8] Vertical Support Rod Dia. (in.)	4-WAY SPLAYED CABLE BRACING REQUIREMENTS				
				Max. [2] Brace Spacing (ft.)	Brace [3] Reaction P (lbs)	Min. Brace Assembly Page E3	Min. Brace Anchorage [6] Form Pour [4] Deck Page D1	Min. Brace Anchorage [6] Metal [5] Deck Page D2
				4-Way Splayed Brace Pattern (B31.2, B34.2)				
11.0	10	97	1/2	30	933	C12AA06WS	N10	L10
25.0	10	219	5/8	20	1,414	C58AA06WS	N15	L15
35.0	10	307	5/8	14	1,386	C58AA06WS	N14	L14
50.0	10	439	5/8	10	1,414	C58AA06WS	N15	L15

1. TVL = DL + Fv + ($0.2S_{DS}$/1.4 x Wp). All Terms Are Working Loads. Based On Eccentric Loading. 65% Of Total Load Allocated Per Rod.
2. Reductions In Actual Installed Brace Spacing Will Result In An Equal Percentage Reduction In Brace Reaction. As An Option When This Occurs ISAT May Substitute An Alternate Anchorage From Tables D1 or D2 Which Meets or Exceeds The Lowered Brace Reaction.
3. At Max. 60 Degree Brace Inclination.
4. Min. 3,000 psi NWC. Any "N Series" Connection May Be Utilized Having A Numeric Designation Equal To Or Higher Than That Shown.
5. Min. 3,000 psi NWC or LWC. Any "L Series" Connection May Be Utilized Having A Numeric Designation Equal To Or Higher Than That Shown.
6. As An Alternate, Brace Anchorage Connections To Structure May Be Employed Using Any Detail From Structural Connections Section "D" Series Details Where Assembly Design Value Meets Or Exceeds Brace Reaction.
7. For Trade Specific Bracing Installation Notes, Refer To Page 9.1.
8. Utilize Any "G" Series Vertical Support Connection Having A Design Value Equal To Or Greater Than The Corresponding "Rod Total Vertical Load".

REVIEWED FOR CODE COMPLIANCE
OPM-0403
By: William Staehlin
DATE: 01-26-2024
CALIFORNIA BUILDING CODE, 2022

REGISTERED PROFESSIONAL ENGINEER
MARCIN WASAZNIK
S-6612
STRUCTURAL
STATE OF CALIFORNIA

ISAT
A Division of Tomarco Contractor Specialties

International Seismic Application Technology
14848 Northam Street, La Mirada, CA 90638
877-999-4728 (Toll Free) 714-523-0845 (Fax)
www.isatsb.com

Rev. 1
11/19/18
Page
C24-1-60

RIGID BRACING REQUIREMENTS [7]

MECHANICAL EQUIPMENT, ROD HUNG — **MAXIMUM SEISMIC DESIGN FORCE = 0.25 G's**

Requires Use of ISAT Seismic Brackets. *Use of Any Non-ISAT Bracket Voids Engineering.*

2013 California Building Code Compliant

Equipment Maximum Operating Weight (lbs)	Support Rod Total Vertical Load [1, 8] (lbs)	Minimum Vertical Support Rod Dia. (in.)	TRANSVERSE BRACING REQUIREMENTS: Brace [3] Reaction P (lbs)	Min. Brace Assembly E - Pages	Min. Brace Anchorage [6]: Form Pour [4] Deck Page D1	Min. Brace Anchorage [6]: Metal [5] Deck Page D2	LONGITUDINAL BRACING REQUIREMENTS: Brace [3] Reaction P (lbs)	Min. Brace Assembly E - Pages	Min. Brace Anchorage [6]: Form Pour [4] Deck Page D1	Min. Brace Anchorage [6]: Metal [5] Deck Page D2
2-ROD SUPPORT			**1-Way Transverse Brace Pattern (B38.0, B38.3)**				**3-Way Trans., Longitudinal Brace Pattern (B38.0, B38.3)**			
25	33	3/8	7	R38AAEM306	N1	L1	5	R38AAEM306	N1	L1
50	66	3/8	14	R38AAEM306	N1	L1	9	R38AAEM306	N1	L1
75	99	3/8	22	R38AAEM306	N1	L1	14	R38AAEM306	N1	L1
100	132	3/8	29	R38AAEM306	N1	L1	19	R38AAEM306	N1	L1
200	264	3/8	58	R38AAEM306	N1	L1	38	R38AAEM306	N1	L1
300	396	3/8	87	R38AAEM306	N1	L1	56	R38AAEM306	N1	L1
			4-WAY SPLAY BRACING REQUIREMENTS							
4-ROD SUPPORT			**4-Way Splay Brace Pattern (B38.1, B38.4, B50.1)**							
500	407	3/8	72	R38AAEM306	N1	L1				
750	611	3/8	108	R38AAEM306	N2	L2				
1,000	815	1/2	144	R12AAEM306	N2	L2				
2,000	1,629	5/8	289	R58AAEM306	N3	L3				
4,000	3,259	3/4	577	R34CFB1P12	N6	L6				
			8-WAY SPLAY BRACING REQUIREMENTS							
6-ROD SUPPORT			**8-Way Splay Brace Pattern (B38.2, B38.5)**							
850	777	3/8	61	R38AAEM306	N1	L1				
1,500	1,370	1/2	108	R12AAEM306	N2	L2				
2,500	2,284	5/8	180	R58AAEM306	N2	L2				
3,800	3,472	3/4	274	R34CFA1P06	N3	L3				

1. TVL = DL + Fv + ($0.2S_{DS}$/1.4 x Wp).
2. Not Used.
3. At Max. 30 Degree Brace Inclination.
4. Min. 3,000 psi NWC. Any "N Series" Connection May Be Utilized Having A Numeric Designation Equal To Or Higher Than That Shown.
5. Min. 3,000 psi NWC or LWC. Any "L Series" Connection May Be Utilized Having A Numeric Designation Equal To Or Higher Than That Shown.
6. As An Alternate, Brace Anchorage Connections To Structure May Be Employed Using Any Detail From Structural Connections Section "D" Series Details Where Assembly Design Value Meets Or Exceeds Brace Reaction.
7. For Trade Specific Bracing Installation Notes, Refer To Page 9.1.
8. Utilize Any "G" Series Vertical Support Connection Having A Design Value Equal To Or Greater Than The Corresponding "Rod Total Vertical Load".
9. Rod Loads Include A Force Increase of +/- 25% Of The Equipment Weight Due To Eccentricity Between Applied Lateral Force and Brace Arm Resistance.

REGISTERED PROFESSIONAL ENGINEER MARCIN WASAZNIK S 6612 STRUCTURAL STATE OF CALIFORNIA

ISAT
A Division of Tomarco Contractor Specialties

International Seismic Application Technology
14848 Northam Street, La Mirada, CA 90638
877-999-4728 (Toll Free) 714-523-0845 (Fax)
www.isatsb.com

Rev. 1
03/12/19
Page
C27-0.25-30

REVIEWED FOR CODE COMPLIANCE
CAi
OPM-0403
By: William Staehlin
DATE: 01/26/2024
CALIFORNIA BUILDING CODE, 2022

RIGID BRACING REQUIREMENTS [7]

MECHANICAL EQUIPMENT, ROD HUNG — **MAXIMUM SEISMIC DESIGN FORCE = 0.25 G's**

Requires Use of ISAT Seismic Brackets. *Use of Any Non-ISAT Bracket Voids Engineering.*

2013 California Building Code Compliant

Equipment Maximum Operating Weight (lbs)	Support Rod Total Vertical Load [1, 8] (lbs)	Minimum Vertical Support Rod Dia. (in.)	TRANSVERSE BRACING REQUIREMENTS				LONGITUDINAL BRACING REQUIREMENTS			
			Brace [3] Reaction P (lbs)	Min. Brace Assembly E - Pages	Min. Brace Anchorage [6] Form Pour [4] Deck Page D1	Min. Brace Anchorage [6] Metal [5] Deck Page D2	Brace [3] Reaction P (lbs)	Min. Brace Assembly E - Pages	Min. Brace Anchorage [6] Form Pour [4] Deck Page D1	Min. Brace Anchorage [6] Metal [5] Deck Page D2
2-ROD SUPPORT			**1-Way Transverse Brace Pattern (B38.0, B38.3)**				**3-Way Trans., Longitudinal Brace Pattern (B38.0, B38.3)**			
25	38	3/8	10	R38AAEM306	N1	L1	6	R38AAEM306	N1	L1
50	75	3/8	19	R38AAEM306	N1	L1	13	R38AAEM306	N1	L1
75	113	3/8	29	R38AAEM306	N1	L1	19	R38AAEM306	N1	L1
100	151	3/8	39	R38AAEM306	N1	L1	25	R38AAEM306	N1	L1
200	301	3/8	78	R38AAEM306	N1	L1	51	R38AAEM306	N1	L1
300	452	3/8	117	R38AAEM306	N2	L2	76	R38AAEM306	N1	L1
			4-WAY SPLAY BRACING REQUIREMENTS							
4-ROD SUPPORT			**4-Way Splay Brace Pattern (B38.1, B38.4,)**							
500	446	3/8	97	R38AAEM306	N1	L1				
750	669	3/8	146	R38AAEM306	N2	L2				
1,000	891	1/2	194	R12AAEM306	N2	L2				
2,000	1,783	5/8	389	R58AAEM406	N4	L4				
3,000	2,674	3/4	583	R34CFB1P12	N6	L6				
			8-WAY SPLAY BRACING REQUIREMENTS							
6-ROD SUPPORT			**8-Way Splay Brace Pattern (B38.2, B38.5)**							
800	762	3/8	78	R38AAEM306	N1	L1				
1,500	1,428	1/2	146	R12AAEM306	N2	L2				
2,400	2,285	5/8	233	R58AAEM306	N3	L3				
3,600	3,427	3/4	350	R34CFA1P06	N4	L4				

1. TVL = DL + Fv + ($0.2S_{DS}$/1.4 x Wp).
2. Not Used.
3. At Max. 50 Degree Brace Inclination.
4. Min. 3,000 psi NWC. Any "N Series" Connection May Be Utilized Having A Numeric Designation Equal To Or Higher Than That Shown.
5. Min. 3,000 psi NWC or LWC. Any "L Series" Connection May Be Utilized Having A Numeric Designation Equal To Or Higher Than That Shown.
6. As An Alternate, Brace Anchorage Connections To Structure May Be Employed Using Any Detail From Structural Connections Section "D" Series Details Where Assembly Design Value Meets Or Exceeds Brace Reaction.
7. For Trade Specific Bracing Installation Notes, Refer To Page 9.1.
8. Utilize Any "G" Series Vertical Support Connection Having A Design Value Equal To Or Greater Than The Corresponding "Rod Total Vertical Load".
9. Rod Loads Include A Force Increase of +/- 25% Of The Equipment Weight Due To Eccentricity Between Applied Lateral Force and Brace Arm Resistance.

REVIEWED FOR CODE COMPLIANCE
OPM-0403
BY: William Staehlin
DATE: 01/26/2024
CALIFORNIA BUILDING CODE, 2022

REGISTERED PROFESSIONAL ENGINEER
MARCIN WASAZNIK
S 6612
STRUCTURAL
STATE OF CALIFORNIA

ISAT
A Division of Tomarco Contractor Specialties
International Seismic Application Technology
14848 Northam Street, La Mirada, CA 90638
877-999-4728 (Toll Free) 714-523-0845 (Fax)
www.isatsb.com

Rev. 1
03/12/19
Page
C27-0.25-45

RIGID BRACING REQUIREMENTS [7]

MECHANICAL EQUIPMENT, ROD HUNG — **MAXIMUM SEISMIC DESIGN FORCE = 0.25 G's**

Requires Use of ISAT Seismic Brackets. *Use of Any Non-ISAT Bracket Voids Engineering.*

2013 California Building Code Compliant

Equipment Maximum Operating Weight (lbs)	Support Rod Total Vertical Load [1, 8] (lbs)	Minimum Vertical Support Rod Dia. (in.)	TRANSVERSE BRACING REQUIREMENTS: Brace [3] Reaction P (lbs)	Min. Brace Assembly E - Pages	Min. Brace Anchorage [6]: Form Pour [4] Deck Page D1	Min. Brace Anchorage [6]: Metal [5] Deck Page D2	LONGITUDINAL BRACING REQUIREMENTS: Brace [3] Reaction P (lbs)	Min. Brace Assembly E - Pages	Min. Brace Anchorage [6]: Form Pour [4] Deck Page D1	Min. Brace Anchorage [6]: Metal [5] Deck Page D2
2-ROD SUPPORT			**1-Way Transverse Brace Pattern (B38.0, B38.3)**				**3-Way Trans., Longitudinal Brace Pattern (B38.0, B38.3)**			
25	42	3/8	13	R38AAEM306	N1	L1	8	R38AAEM306	N1	L1
50	83	3/8	25	R38AAEM306	N1	L1	16	R38AAEM306	N1	L1
75	125	3/8	38	R38AAEM306	N1	L1	24	R38AAEM306	N1	L1
100	167	3/8	50	R38AAEM306	N1	L1	33	R38AAEM306	N1	L1
200	333	3/8	100	R38AAEM306	N1	L1	65	R38AAEM306	N1	L1
300	500	3/8	150	R38AAEM306	N2	L2	98	R38AAEM306	N1	L1
			4-WAY SPLAY BRACING REQUIREMENTS							
4-ROD SUPPORT			**4-Way Splay Brace Pattern (B38.1, B38.4, B50.1)**							
500	480	3/8	125	R38AAEM306	N2	L2				
750	719	3/8	188	R38AAEM306	N2	L2				
1,000	959	1/2	250	R12AAEM306	N3	L3				
2,000	1,918	5/8	500	R58AAEM406	N5	L5				
3,000	2,877	3/4	750	R34CFB1P09	N8	L8				
			8-WAY SPLAY BRACING REQUIREMENTS							
6-ROD SUPPORT			**8-Way Splay Brace Pattern (B38.2, B38.5)**							
800	789	3/8	100	R38AAEM306	N1	L1				
1,400	1,380	1/2	175	R12AAEM306	N2	L2				
2,300	2,267	5/8	288	R58AAEM306	N3	L3				
3,500	3,450	3/4	438	R34CFA1P06	N5	L5				

1. TVL = DL + Fv + ($0.2S_{DS}$/1.4 x Wp).
2. Not Used.
3. At Max. 60 Degree Brace Inclination.
4. Min. 3,000 psi NWC. Any "N Series" Connection May Be Utilized Having A Numeric Designation Equal To Or Higher Than That Shown.
5. Min. 3,000 psi NWC or LWC. Any "L Series" Connection May Be Utilized Having A Numeric Designation Equal To Or Higher Than That Shown.
6. As An Alternate, Brace Anchorage Connections To Structure May Be Employed Using Any Detail From Structural Connections Section "D" Series Details Where Assembly Design Value Meets Or Exceeds Brace Reaction.
7. For Trade Specific Bracing Installation Notes, Refer To Page 9.1.
8. Utilize Any "G" Series Vertical Support Connection Having A Design Value Equal To Or Greater Than The Corresponding "Rod Total Vertical Load".
9. Rod Loads Include A Force Increase of +/- 25% Of The Equipment Weight Due To Eccentricity Between Applied Lateral Force and Brace Arm Resistance.

REGISTERED PROFESSIONAL ENGINEER MARCIN WASAZNIK S 6612 STRUCTURAL STATE OF CALIFORNIA

ISAT
A Division of Tomarco Contractor Specialties
International Seismic Application Technology
14848 Northam Street, La Mirada, CA 90638
877-999-4728 (Toll Free) 714-523-0845 (Fax)
www.isatsb.com

Rev. 1
03/12/19
Page
C27-0.25-60

REVIEWED FOR CODE COMPLIANCE OPM-0403 BY: William Staehlin DATE: 01-26-2024 CALIFORNIA BUILDING CODE, 2022

RIGID BRACING REQUIREMENTS [7]

MECHANICAL EQUIPMENT, ROD HUNG — **MAXIMUM SEISMIC DESIGN FORCE = 0.50 G's**

Requires Use of ISAT Seismic Brackets. *Use of Any Non-ISAT Bracket Voids Engineering.*

2013 California Building Code Compliant

Equipment Maximum Operating Weight (lbs)	Support Rod Total Vertical Load [1, 8] (lbs)	Minimum Vertical Support Rod Dia. (in.)	TRANSVERSE BRACING REQUIREMENTS				LONGITUDINAL BRACING REQUIREMENTS			
			Brace [3] Reaction P (lbs)	Min. Brace Assembly E - Pages	Min. Brace Anchorage [6] Form Pour [4] Deck Page D1	Min. Brace Anchorage [6] Metal [5] Deck Page D2	Brace [3] Reaction P (lbs)	Min. Brace Assembly E - Pages	Min. Brace Anchorage [6] Form Pour [4] Deck Page D1	Min. Brace Anchorage [6] Metal [5] Deck Page D2
2-ROD SUPPORT			**1-Way Transverse Brace Pattern (B38.0, B38.3)**				**3-Way Trans., Longitudinal Brace Pattern (B38.0, B38.3)**			
25	37	3/8	14	R38AAEM306	N1	L1	9	R38AAEM306	N1	L1
50	75	3/8	29	R38AAEM306	N1	L1	19	R38AAEM306	N1	L1
75	112	3/8	43	R38AAEM306	N1	L1	28	R38AAEM306	N1	L1
100	149	3/8	58	R38AAEM306	N1	L1	38	R38AAEM306	N1	L1
200	299	3/8	115	R38AAEM306	N2	L2	75	R38AAEM306	N1	L1
300	448	3/8	173	R38AAEM306	N2	L2	113	R38AAEM306	N2	L2
			4-WAY SPLAY BRACING REQUIREMENTS							
4-ROD SUPPORT			**4-Way Splay Brace Pattern (B38.1, B38.4, B50.1)**							
500	443	3/8	144	R38AAEM306	N2	L2				
750	665	3/8	217	R38AAEM306	N3	L3				
1,000	887	1/2	289	R12AAEM306	N3	L3				
2,000	1,774	5/8	577	R58AAEM406	N6	L6				
3,000	2,661	3/4	866	R34DGB1P09	N9	L9				
			8-WAY SPLAY BRACING REQUIREMENTS							
6-ROD SUPPORT			**8-Way Splay Brace Pattern (B38.2, B38.5)**							
800	760	3/8	115	R38AAEM306	N2	L2				
1,500	1,425	1/2	217	R12AAEM306	N3	L3				
2,450	2,327	5/8	354	R58AAEM406	N4	L4				
3,600	3,419	3/4	520	R34CFA1P06	N6	L6				

1. TVL = DL + Fv + ($0.2S_{DS}$/1.4 x Wp).
2. Not Used.
3. At Max. 30 Degree Brace Inclination.
4. Min. 3,000 psi NWC. Any "N Series" Connection May Be Utilized Having A Numeric Designation Equal To Or Higher Than That Shown.
5. Min. 3,000 psi NWC or LWC. Any "L Series" Connection May Be Utilized Having A Numeric Designation Equal To Or Higher Than That Shown.
6. As An Alternate, Brace Anchorage Connections To Structure May Be Employed Using Any Detail From Structural Connections Section "D" Series Details Where Assembly Design Value Meets Or Exceeds Brace Reaction.
7. For Trade Specific Bracing Installation Notes, Refer To Page 9.1.
8. Utilize Any "G" Series Vertical Support Connection Having A Design Value Equal To Or Greater Than The Corresponding "Rod Total Vertical Load".
9. Rod Loads Include A Force Increase of +/- 25% Of The Equipment Weight Due To Eccentricity Between Applied Lateral Force and Brace Arm Resistance.

REGISTERED PROFESSIONAL ENGINEER MARCIN WASAZNIK S 6612 STRUCTURAL STATE OF CALIFORNIA

ISAT
A Division of Tomarco Contractor Specialties

International Seismic Application Technology
14848 Northam Street, La Mirada, CA 90638
877-999-4728 (Toll Free) 714-523-0845 (Fax)
www.isatsb.com

Rev. 1
03/12/19
Page
C27-0.5-30

REVIEWED FOR CODE COMPLIANCE OPM-0403 BY: William Staehlin DATE: 01/26/2024 CALIFORNIA BUILDING CODE, 2022

RIGID BRACING REQUIREMENTS [7]

MECHANICAL EQUIPMENT, ROD HUNG — **MAXIMUM SEISMIC DESIGN FORCE = 0.50 G's**

Requires Use of ISAT Seismic Brackets. *Use of Any Non-ISAT Bracket Voids Engineering.*

2013 California Building Code Compliant

Equipment Maximum Operating Weight (lbs)	Support Rod Total Vertical Load [1, 8] (lbs)	Minimum Vertical Support Rod Dia. (in.)	TRANSVERSE BRACING REQUIREMENTS: Brace [3] Reaction P (lbs)	Min. Brace Assembly E - Pages	Min. Brace Anchorage [6]: Form Pour [4] Deck Page D1	Min. Brace Anchorage [6]: Metal [5] Deck Page D2	LONGITUDINAL BRACING REQUIREMENTS: Brace [3] Reaction P (lbs)	Min. Brace Assembly E - Pages	Min. Brace Anchorage [6]: Form Pour [4] Deck Page D1	Min. Brace Anchorage [6]: Metal [5] Deck Page D2
2-ROD SUPPORT			**1-Way Transverse Brace Pattern (B38.0, B38.3)**				**3-Way Trans., Longitudinal Brace Pattern (B38.0, B38.3)**			
25	47	3/8	19	R38AAEM306	N1	L1	13	R38AAEM306	N1	L1
50	93	3/8	39	R38AAEM306	N1	L1	25	R38AAEM306	N1	L1
75	140	3/8	58	R38AAEM306	N1	L1	38	R38AAEM306	N1	L1
100	186	3/8	78	R38AAEM306	N1	L1	51	R38AAEM306	N1	L1
200	373	3/8	156	R38AAEM306	N2	L2	101	R38AAEM306	N2	L2
300	559	3/8	233	R38AAEM306	N3	L3	152	R38AAEM306	N2	L2
			4-WAY SPLAY BRACING REQUIREMENTS							
4-ROD SUPPORT			**4-Way Splay Brace Pattern (B38.1, B38.4,)**							
500	520	3/8	194	R38AAEM306	N2	L2				
750	780	3/8	292	R38AAEM306	N3	L3				
1,000	1,040	1/2	389	R12AAEM406	N4	L4				
2,000	2,081	5/8	778	R58AAEM509	N8	L8				
3,000	3,121	3/4	1,167	R34CFB1P06	N12	L12				
			8-WAY SPLAY BRACING REQUIREMENTS							
6-ROD SUPPORT			**8-Way Splay Brace Pattern (B38.2, B38.5)**							
750	770	3/8	146	R38AAEM306	N2	L2				
1,400	1,437	1/2	272	R12AAEM306	N3	L3				
2,250	2,310	5/8	438	R58AAEM406	N5	L5				
3,400	3,490	3/4	661	R34CFB1P12	N7	L7				

1. TVL = DL + Fv + ($0.2S_{DS}$/1.4 x Wp).
2. Not Used.
3. At Max. 50 Degree Brace Inclination.
4. Min. 3,000 psi NWC. Any "N Series" Connection May Be Utilized Having A Numeric Designation Equal To Or Higher Than That Shown.
5. Min. 3,000 psi NWC or LWC. Any "L Series" Connection May Be Utilized Having A Numeric Designation Equal To Or Higher Than That Shown.
6. As An Alternate, Brace Anchorage Connections To Structure May Be Employed Using Any Detail From Structural Connections Section "D" Series Details Where Assembly Design Value Meets Or Exceeds Brace Reaction.
7. For Trade Specific Bracing Installation Notes, Refer To Page 9.1.
8. Utilize Any "G" Series Vertical Support Connection Having A Design Value Equal To Or Greater Than The Corresponding "Rod Total Vertical Load".
9. Rod Loads Include A Force Increase of +/- 25% Of The Equipment Weight Due To Eccentricity Between Applied Lateral Force and Brace Arm Resistance.

REVIEWED FOR CODE COMPLIANCE
OPM-0403
BY: William Staehlin
DATE: 01/26/2024
CALIFORNIA BUILDING CODE, 2022

REGISTERED PROFESSIONAL ENGINEER MARCIN WASAZNIK S 6612 STRUCTURAL STATE OF CALIFORNIA

ISAT
A Division of Tomarco Contractor Specialties
International Seismic Application Technology
14848 Northam Street, La Mirada, CA 90638
877-999-4728 (Toll Free) 714-523-0845 (Fax)
www.isatsb.com

Rev. 1
03/12/19
Page
C27-0.5-45

RIGID BRACING REQUIREMENTS [7]

MECHANICAL EQUIPMENT, ROD HUNG — **MAXIMUM SEISMIC DESIGN FORCE = 0.50 G's**

Requires Use of ISAT Seismic Brackets. *Use of Any Non-ISAT Bracket Voids Engineering.*

2013 California Building Code Compliant

Equipment Maximum Operating Weight (lbs)	Support Rod Total Vertical Load [1, 8] (lbs)	Minimum Vertical Support Rod Dia. (in.)	TRANSVERSE BRACING REQUIREMENTS: Brace [3] Reaction P (lbs)	Min. Brace Assembly E - Pages	Min. Brace Anchorage [6]: Form Pour [4] Deck Page D1	Min. Brace Anchorage [6]: Metal [5] Deck Page D2	LONGITUDINAL BRACING REQUIREMENTS: Brace [3] Reaction P (lbs)	Min. Brace Assembly E - Pages	Min. Brace Anchorage [6]: Form Pour [4] Deck Page D1	Min. Brace Anchorage [6]: Metal [5] Deck Page D2
2-ROD SUPPORT			**1-Way Transverse Brace Pattern (B38.0, B38.3)**				**3-Way Trans., Longitudinal Brace Pattern (B38.0, B38.3)**			
25	55	3/8	25	R38AAEM306	N1	L1	16	R38AAEM306	N1	L1
50	109	3/8	50	R38AAEM306	N1	L1	33	R38AAEM306	N1	L1
75	164	3/8	75	R38AAEM306	N1	L1	49	R38AAEM306	N1	L1
100	219	3/8	100	R38AAEM306	N1	L1	65	R38AAEM306	N1	L1
200	437	3/8	200	R38AAEM306	N2	L2	130	R38AAEM306	N2	L2
300	656	3/8	300	R38AAEM306	N3	L3	195	R38AAEM306	N2	L2
			4-WAY SPLAY BRACING REQUIREMENTS							
4-ROD SUPPORT			**4-Way Splay Brace Pattern (B38.1, B38.4, B50.1)**							
500	588	3/8	250	R38AAEM306	N3	L3				
750	882	1/2	375	R12AAEM406	N4	L4				
1,000	1,176	1/2	500	R12AAEM406	N5	L5				
2,000	2,351	3/4	1,000	R34DGB1P06	N10	L10				
2,500	2,939	3/4	1,250	R34DGB1P06	N13	L13				
			8-WAY SPLAY BRACING REQUIREMENTS							
6-ROD SUPPORT			**8-Way Splay Brace Pattern (B38.2, B38.5)**							
700	766	3/8	175	R38AAEM306	N2	L2				
1,300	1,422	1/2	325	R12AAEM409	N4	L4				
2,100	2,297	5/8	525	R58AAEM406	N6	L6				
3,150	3,446	3/4	788	R34CFB1P09	N8	L8				

1. TVL = DL + Fv + ($0.2S_{DS}$/1.4 x Wp).
2. Not Used.
3. At Max. 60 Degree Brace Inclination.
4. Min. 3,000 psi NWC. Any "N Series" Connection May Be Utilized Having A Numeric Designation Equal To Or Higher Than That Shown.
5. Min. 3,000 psi NWC or LWC. Any "L Series" Connection May Be Utilized Having A Numeric Designation Equal To Or Higher Than That Shown.
6. As An Alternate, Brace Anchorage Connections To Structure May Be Employed Using Any Detail From Structural Connections Section "D" Series Details Where Assembly Design Value Meets Or Exceeds Brace Reaction.
7. For Trade Specific Bracing Installation Notes, Refer To Page 9.1.
8. Utilize Any "G" Series Vertical Support Connection Having A Design Value Equal To Or Greater Than The Corresponding "Rod Total Vertical Load".
9. Rod Loads Include A Force Increase of +/- 25% Of The Equipment Weight Due To Eccentricity Between Applied Lateral Force and Brace Arm Resistance.

REGISTERED PROFESSIONAL ENGINEER MARCIN WASAZNIK S 6612 STRUCTURAL STATE OF CALIFORNIA

ISAT
A Division of Tomarco Contractor Specialties

International Seismic Application Technology
14848 Northam Street, La Mirada, CA 90638
877-999-4728 (Toll Free) 714-523-0845 (Fax)
www.isatsb.com

Rev. 1
03/12/19
Page
C27-0.5-60

REVIEWED FOR CODE COMPLIANCE
OPM-0403
By: William Staehlin
DATE: 01/26/2024
CALIFORNIA BUILDING CODE, 2022

RIGID BRACING REQUIREMENTS [7]

MECHANICAL EQUIPMENT, ROD HUNG — **MAXIMUM SEISMIC DESIGN FORCE = 0.75 G's**

Requires Use of ISAT Seismic Brackets. *Use of Any Non-ISAT Bracket Voids Engineering.*

2013 California Building Code Compliant

Equipment Maximum Operating Weight (lbs)	Support Rod Total Vertical Load [1, 8] (lbs)	Minimum Vertical Support Rod Dia. (in.)	TRANSVERSE BRACING REQUIREMENTS: Brace [3] Reaction P (lbs)	Min. Brace Assembly E - Pages	Min. Brace Anchorage [6]: Form Pour [4] Deck Page D1	Min. Brace Anchorage [6]: Metal [5] Deck Page D2	LONGITUDINAL BRACING REQUIREMENTS: Brace [3] Reaction P (lbs)	Min. Brace Assembly E - Pages	Min. Brace Anchorage [6]: Form Pour [4] Deck Page D1	Min. Brace Anchorage [6]: Metal [5] Deck Page D2
2-ROD SUPPORT			**1-Way Transverse Brace Pattern (B38.0, B38.3)**				**3-Way Trans., Longitudinal Brace Pattern (B38.0, B38.3)**			
25	42	3/8	22	R38AAEM306	N1	L1	14	R38AAEM306	N1	L1
50	83	3/8	43	R38AAEM306	N1	L1	28	R38AAEM306	N1	L1
75	125	3/8	65	R38AAEM306	N1	L1	42	R38AAEM306	N1	L1
100	167	3/8	87	R38AAEM306	N1	L1	56	R38AAEM306	N1	L1
200	333	3/8	173	R38AAEM306	N2	L2	113	R38AAEM306	N2	L2
300	500	3/8	260	R38AAEM306	N3	L3	169	R38AAEM306	N2	L2
			4-WAY SPLAY BRACING REQUIREMENTS							
4-ROD SUPPORT			**4-Way Splay Brace Pattern (B38.1, B38.4, B50.1)**							
500	480	3/8	217	R38AAEM306	N3	L3				
750	719	3/8	325	R38AAEM409	N4	L4				
1,000	959	1/2	433	R12AAEM406	N5	L5				
2,000	1,918	5/8	866	R58AAEM506	N9	L9				
3,000	2,877	3/4	1,299	#N/A	N13	L13				
			8-WAY SPLAY BRACING REQUIREMENTS							
6-ROD SUPPORT			**8-Way Splay Brace Pattern (B38.2, B38.5)**							
800	789	3/8	173	R38AAEM306	N2	L2				
1,450	1,429	1/2	314	R12AAEM409	N4	L4				
2,350	2,317	5/8	509	R58AAEM406	N6	L6				
3,500	3,450	3/4	758	R34CFB1P09	N8	L8				

1. TVL = DL + Fv + ($0.2S_{DS}$/1.4 x Wp).
2. Not Used.
3. At Max. 30 Degree Brace Inclination.
4. Min. 3,000 psi NWC. Any "N Series" Connection May Be Utilized Having A Numeric Designation Equal To Or Higher Than That Shown.
5. Min. 3,000 psi NWC or LWC. Any "L Series" Connection May Be Utilized Having A Numeric Designation Equal To Or Higher Than That Shown.
6. As An Alternate, Brace Anchorage Connections To Structure May Be Employed Using Any Detail From Structural Connections Section "D" Series Details Where Assembly Design Value Meets Or Exceeds Brace Reaction.
7. For Trade Specific Bracing Installation Notes, Refer To Page 9.1.
8. Utilize Any "G" Series Vertical Support Connection Having A Design Value Equal To Or Greater Than The Corresponding "Rod Total Vertical Load".
9. Rod Loads Include A Force Increase of +/- 25% Of The Equipment Weight Due To Eccentricity Between Applied Lateral Force and Brace Arm Resistance.

REVIEWED FOR CODE COMPLIANCE
OPM-0403
BY: William Staehlin
DATE: 01/26/2024
CALIFORNIA BUILDING CODE, 2022

REGISTERED PROFESSIONAL ENGINEER MARCIN WASAZNIK S 6612 STRUCTURAL STATE OF CALIFORNIA

ISAT
A Division of Tomarco Contractor Specialties
International Seismic Application Technology
14848 Northam Street, La Mirada, CA 90638
877-999-4728 (Toll Free) 714-523-0845 (Fax)
www.isatsb.com

Rev. 1
03/12/19
Page
C27-0.75-30

RIGID BRACING REQUIREMENTS [7]

MECHANICAL EQUIPMENT, ROD HUNG — **MAXIMUM SEISMIC DESIGN FORCE = 0.75 G's**

Requires Use of ISAT Seismic Brackets. *Use of Any Non-ISAT Bracket Voids Engineering.*

2013 California Building Code Compliant

Equipment Maximum Operating Weight (lbs)	Support Rod Total Vertical Load [1, 8] (lbs)	Minimum Vertical Support Rod Dia. (in.)	TRANSVERSE BRACING REQUIREMENTS				LONGITUDINAL BRACING REQUIREMENTS			
			Brace [3] Reaction P (lbs)	Min. Brace Assembly E - Pages	Min. Brace Anchorage [6] Form Pour [4] Deck Page D1	Min. Brace Anchorage [6] Metal [5] Deck Page D2	Brace [3] Reaction P (lbs)	Min. Brace Assembly E - Pages	Min. Brace Anchorage [6] Form Pour [4] Deck Page D1	Min. Brace Anchorage [6] Metal [5] Deck Page D2
2-ROD SUPPORT			**1-Way Transverse Brace Pattern (B38.0, B38.3)**				**3-Way Trans., Longitudinal Brace Pattern (B38.0, B38.3)**			
25	56	3/8	29	R38AAEM306	N1	L1	19	R38AAEM306	N1	L1
50	111	3/8	58	R38AAEM306	N1	L1	38	R38AAEM306	N1	L1
75	167	3/8	88	R38AAEM306	N1	L1	57	R38AAEM306	N1	L1
100	222	3/8	117	R38AAEM306	N2	L2	76	R38AAEM306	N1	L1
200	444	3/8	233	R38AAEM306	N3	L3	152	R38AAEM306	N2	L2
300	666	3/8	350	R38AAEM406	N4	L4	228	R38AAEM306	N3	L3
			4-WAY SPLAY BRACING REQUIREMENTS							
4-ROD SUPPORT			**4-Way Splay Brace Pattern (B38.1, B38.4,)**							
500	595	3/8	292	R38AAEM306	N3	L3				
750	892	1/2	438	R12AAEM406	N5	L5				
1,000	1,189	1/2	583	R12AAEM406	N6	L6				
2,000	2,379	3/4	1,167	R34CFB1P06	N12	L12				
			8-WAY SPLAY BRACING REQUIREMENTS							
6-ROD SUPPORT			**8-Way Splay Brace Pattern (B38.2, B38.5)**							
700	771	3/8	204	R38AAEM306	N3	L3				
1,300	1,431	1/2	379	R12AAEM406	N4	L4				
2,100	2,312	5/8	613	R58AAEM406	N7	L7				
3,150	3,468	3/4	919	R34CFB1P06	N10	L10				

1. TVL = DL + Fv + ($0.2S_{DS}$/1.4 x Wp).
2. Not Used.
3. At Max. 50 Degree Brace Inclination.
4. Min. 3,000 psi NWC. Any "N Series" Connection May Be Utilized Having A Numeric Designation Equal To Or Higher Than That Shown.
5. Min. 3,000 psi NWC or LWC. Any "L Series" Connection May Be Utilized Having A Numeric Designation Equal To Or Higher Than That Shown.
6. As An Alternate, Brace Anchorage Connections To Structure May Be Employed Using Any Detail From Structural Connections Section "D" Series Details Where Assembly Design Value Meets Or Exceeds Brace Reaction.
7. For Trade Specific Bracing Installation Notes, Refer To Page 9.1.
8. Utilize Any "G" Series Vertical Support Connection Having A Design Value Equal To Or Greater Than The Corresponding "Rod Total Vertical Load".
9. Rod Loads Include A Force Increase of +/- 25% Of The Equipment Weight Due To Eccentricity Between Applied Lateral Force and Brace Arm Resistance.

REVIEWED FOR CODE COMPLIANCE
OPM-0403
BY: William Staehlin
DATE: 01-26-2024
CALIFORNIA BUILDING CODE, 2022

REGISTERED PROFESSIONAL ENGINEER
MARCIN WASAZNIK
S-6612
STRUCTURAL
STATE OF CALIFORNIA

ISAT
A Division of Tomarco Contractor Specialties
International Seismic Application Technology
14848 Northam Street, La Mirada, CA 90638
877-999-4728 (Toll Free) 714-523-0845 (Fax)
www.isatsb.com

Rev. 1
03/12/19
Page
C27-0.75-45

RIGID BRACING REQUIREMENTS [7]

MECHANICAL EQUIPMENT, ROD HUNG — **MAXIMUM SEISMIC DESIGN FORCE = 0.75 G's**

Requires Use of ISAT Seismic Brackets. *Use of Any Non-ISAT Bracket Voids Engineering.*

2013 California Building Code Compliant

Equipment Maximum Operating Weight (lbs)	Support Rod Total Vertical Load [1, 8] (lbs)	Minimum Vertical Support Rod Dia. (in.)	TRANSVERSE BRACING REQUIREMENTS: Brace [3] Reaction P (lbs)	Min. Brace Assembly E - Pages	Min. Brace Anchorage [6]: Form Pour [4] Deck Page D1	Min. Brace Anchorage [6]: Metal [5] Deck Page D2	LONGITUDINAL BRACING REQUIREMENTS: Brace [3] Reaction P (lbs)	Min. Brace Assembly E - Pages	Min. Brace Anchorage [6]: Form Pour [4] Deck Page D1	Min. Brace Anchorage [6]: Metal [5] Deck Page D2
2-ROD SUPPORT			**1-Way Transverse Brace Pattern (B38.0, B38.3)**				**3-Way Trans., Longitudinal Brace Pattern (B38.0, B38.3)**			
25	68	3/8	38	R38AAEM306	N1	L1	24	R38AAEM306	N1	L1
50	135	3/8	75	R38AAEM306	N1	L1	49	R38AAEM306	N1	L1
75	203	3/8	113	R38AAEM306	N2	L2	73	R38AAEM306	N1	L1
100	271	3/8	150	R38AAEM306	N2	L2	98	R38AAEM306	N1	L1
200	541	3/8	300	R38AAEM306	N3	L3	195	R38AAEM306	N2	L2
300	812	1/2	450	R12AAEM406	N5	L5	293	R12AAEM306	N3	L3
			4-WAY SPLAY BRACING REQUIREMENTS							
4-ROD SUPPORT			**4-Way Splay Brace Pattern (B38.1, B38.4, B50.1)**							
500	696	3/8	375	R38AAEM406	N4	L4				
750	1,044	1/2	563	R12AAEM406	N6	L6				
1,000	1,392	1/2	750	R12AAEM509	N8	L8				
			8-WAY SPLAY BRACING REQUIREMENTS							
6-ROD SUPPORT			**8-Way Splay Brace Pattern (B38.2, B38.5)**							
650	781	3/8	244	R38AAEM306	N3	L3				
1,200	1,443	1/2	450	R12AAEM406	N5	L5				
1,850	2,224	5/8	694	R58AAEM509	N7	L7				
2,900	3,487	3/4	1,088	R34DGB1P06	N11	L11				

1. TVL = DL + Fv + ($0.2S_{DS}$/1.4 x Wp).
2. Not Used.
3. At Max. 60 Degree Brace Inclination.
4. Min. 3,000 psi NWC. Any "N Series" Connection May Be Utilized Having A Numeric Designation Equal To Or Higher Than That Shown.
5. Min. 3,000 psi NWC or LWC. Any "L Series" Connection May Be Utilized Having A Numeric Designation Equal To Or Higher Than That Shown.
6. As An Alternate, Brace Anchorage Connections To Structure May Be Employed Using Any Detail From Structural Connections Section "D" Series Details Where Assembly Design Value Meets Or Exceeds Brace Reaction.
7. For Trade Specific Bracing Installation Notes, Refer To Page 9.1.
8. Utilize Any "G" Series Vertical Support Connection Having A Design Value Equal To Or Greater Than The Corresponding "Rod Total Vertical Load".
9. Rod Loads Include A Force Increase of +/- 25% Of The Equipment Weight Due To Eccentricity Between Applied Lateral Force and Brace Arm Resistance.

REGISTERED PROFESSIONAL ENGINEER MARCIN WASAZNIK S-6612 STRUCTURAL STATE OF CALIFORNIA

ISAT
A Division of Tomarco Contractor Specialties

International Seismic Application Technology
14848 Northam Street, La Mirada, CA 90638
877-999-4728 (Toll Free) 714-523-0845 (Fax)
www.isatsb.com

Rev. 1
03/12/19
Page
C27-0.75-60

REVIEWED FOR CODE COMPLIANCE BY William Staehlin DATE 01-26-2024 CALIFORNIA BUILDING CODE, 2022

RIGID BRACING REQUIREMENTS [7]

MECHANICAL EQUIPMENT, ROD HUNG — **MAXIMUM SEISMIC DESIGN FORCE = 1.00 G's**

Requires Use of ISAT Seismic Brackets. *Use of Any Non-ISAT Bracket Voids Engineering.*

2013 California Building Code Compliant

Equipment Maximum Operating Weight (lbs)	Support Rod Total Vertical Load [1, 8] (lbs)	Minimum Vertical Support Rod Dia. (in.)	TRANSVERSE BRACING REQUIREMENTS: Brace [3] Reaction P (lbs)	Min. Brace Assembly E - Pages	Min. Brace Anchorage [6]: Form Pour [4] Deck Page D1	Min. Brace Anchorage [6]: Metal [5] Deck Page D2	LONGITUDINAL BRACING REQUIREMENTS: Brace [3] Reaction P (lbs)	Min. Brace Assembly E - Pages	Min. Brace Anchorage [6]: Form Pour [4] Deck Page D1	Min. Brace Anchorage [6]: Metal [5] Deck Page D2
2-ROD SUPPORT			**1-Way Transverse Brace Pattern (B38.0, B38.3)**				**3-Way Trans., Longitudinal Brace Pattern (B38.0, B38.3)**			
25	46	3/8	29	R38AAEM306	N1	L1	19	R38AAEM306	N1	L1
50	92	3/8	58	R38AAEM306	N1	L1	38	R38AAEM306	N1	L1
75	138	3/8	87	R38AAEM306	N1	L1	56	R38AAEM306	N1	L1
100	184	3/8	115	R38AAEM306	N2	L2	75	R38AAEM306	N1	L1
200	368	3/8	231	R38AAEM306	N3	L3	150	R38AAEM306	N2	L2
300	552	3/8	346	R38AAEM406	N4	L4	225	R38AAEM306	N3	L3
			4-WAY SPLAY BRACING REQUIREMENTS							
4-ROD SUPPORT			**4-Way Splay Brace Pattern (B38.1, B38.4, B50.1)**							
500	516	3/8	289	R38AAEM306	N3	L3				
750	773	3/8	433	R38AAEM406	N5	L5				
1,000	1,031	1/2	577	R12AAEM406	N6	L6				
2,000	2,062	5/8	1,155	R58AAEM506	N12	L12				
4,000	4,125	7/8	2,309	#N/A	N24	L24				
			8-WAY SPLAY BRACING REQUIREMENTS							
6-ROD SUPPORT			**8-Way Splay Brace Pattern (B38.2, B38.5)**							
750	766	3/8	217	R38AAEM306	N3	L3				
1,400	1,431	1/2	404	R12AAEM406	N5	L5				
2,250	2,299	5/8	650	R58AAEM406	N7	L7				
3,400	3,474	3/4	981	R34DGB1P06	N10	L10				

1. TVL = DL + Fv + ($0.2S_{DS}$/1.4 x Wp).
2. Not Used.
3. At Max. 30 Degree Brace Inclination.
4. Min. 3,000 psi NWC. Any "N Series" Connection May Be Utilized Having A Numeric Designation Equal To Or Higher Than That Shown.
5. Min. 3,000 psi NWC or LWC. Any "L Series" Connection May Be Utilized Having A Numeric Designation Equal To Or Higher Than That Shown.
6. As An Alternate, Brace Anchorage Connections To Structure May Be Employed Using Any Detail From Structural Connections Section "D" Series Details Where Assembly Design Value Meets Or Exceeds Brace Reaction.
7. For Trade Specific Bracing Installation Notes, Refer To Page 9.1.
8. Utilize Any "G" Series Vertical Support Connection Having A Design Value Equal To Or Greater Than The Corresponding "Rod Total Vertical Load".
9. Rod Loads Include A Force Increase of +/- 25% Of The Equipment Weight Due To Eccentricity Between Applied Lateral Force and Brace Arm Resistance.

REGISTERED PROFESSIONAL ENGINEER MARCIN WASAZNIK S 6612 STRUCTURAL STATE OF CALIFORNIA

ISAT
A Division of Tomarco Contractor Specialties

International Seismic Application Technology
14848 Northam Street, La Mirada, CA 90638
877-999-4728 (Toll Free) 714-523-0845 (Fax)
www.isatsb.com

Rev. 1
03/12/19
Page
C27-1-30

REVIEWED FOR CODE COMPLIANCE
OPM-0403
By: William Staehlin
DATE: 01-26-2024
CALIFORNIA BUILDING CODE, 2022

RIGID BRACING REQUIREMENTS [7]

MECHANICAL EQUIPMENT, ROD HUNG — **MAXIMUM SEISMIC DESIGN FORCE = 1.00 G's**

Requires Use of ISAT Seismic Brackets. *Use of Any Non-ISAT Bracket Voids Engineering.*

2013 California Building Code Compliant

Equipment Maximum Operating Weight (lbs)	Support Rod Total Vertical Load [1, 8] (lbs)	Minimum Vertical Support Rod Dia. (in.)	TRANSVERSE BRACING REQUIREMENTS: Brace [3] Reaction P (lbs)	Min. Brace Assembly E - Pages	Min. Brace Anchorage [6]: Form Pour [4] Deck Page D1	Min. Brace Anchorage [6]: Metal [5] Deck Page D2	LONGITUDINAL BRACING REQUIREMENTS: Brace [3] Reaction P (lbs)	Min. Brace Assembly E - Pages	Min. Brace Anchorage [6]: Form Pour [4] Deck Page D1	Min. Brace Anchorage [6]: Metal [5] Deck Page D2
2-ROD SUPPORT			**1-Way Transverse Brace Pattern (B38.0, B38.3)**				**3-Way Trans., Longitudinal Brace Pattern (B38.0, B38.3)**			
25	64	3/8	39	R38AAEM306	N1	L1	25	R38AAEM306	N1	L1
50	129	3/8	78	R38AAEM306	N1	L1	51	R38AAEM306	N1	L1
75	193	3/8	117	R38AAEM306	N2	L2	76	R38AAEM306	N1	L1
100	258	3/8	156	R38AAEM306	N2	L2	101	R38AAEM306	N2	L2
200	516	3/8	311	R38AAEM409	N4	L4	202	R38AAEM306	N3	L3
300	773	1/2	467	R12AAEM406	N5	L5	303	R12AAEM409	N4	L4
			4-WAY SPLAY BRACING REQUIREMENTS							
4-ROD SUPPORT			**4-Way Splay Brace Pattern (B38.1, B38.4,)**							
500	669	3/8	389	R38AAEM406	N4	L4				
750	1,004	1/2	583	R12AAEM406	N6	L6				
1,000	1,338	1/2	778	R12AAEM509	N8	L8				
2,000	2,677	3/4	1,556	R34CFB2P12	N16	L16				
4,000	5,354	1	3,111	#N/A	#N/A	#N/A				
			8-WAY SPLAY BRACING REQUIREMENTS							
6-ROD SUPPORT			**8-Way Splay Brace Pattern (B38.2, B38.5)**							
650	764	3/8	253	R38AAEM306	N3	L3				
1,200	1,411	1/2	467	R12AAEM406	N5	L5				
1,950	2,292	5/8	758	R58AAEM509	N8	L8				
2,950	3,468	3/4	1,147	R34CFB1P06	N12	L12				

1. TVL = DL + Fv + ($0.2S_{DS}$/1.4 x Wp).
2. Not Used.
3. At Max. 50 Degree Brace Inclination.
4. Min. 3,000 psi NWC. Any "N Series" Connection May Be Utilized Having A Numeric Designation Equal To Or Higher Than That Shown.
5. Min. 3,000 psi NWC or LWC. Any "L Series" Connection May Be Utilized Having A Numeric Designation Equal To Or Higher Than That Shown.
6. As An Alternate, Brace Anchorage Connections To Structure May Be Employed Using Any Detail From Structural Connections Section "D" Series Details Where Assembly Design Value Meets Or Exceeds Brace Reaction.
7. For Trade Specific Bracing Installation Notes, Refer To Page 9.1.
8. Utilize Any "G" Series Vertical Support Connection Having A Design Value Equal To Or Greater Than The Corresponding "Rod Total Vertical Load".
9. Rod Loads Include A Force Increase of +/- 25% Of The Equipment Weight Due To Eccentricity Between Applied Lateral Force and Brace Arm Resistance.

REGISTERED PROFESSIONAL ENGINEER MARCIN WASAZNIK S 6612 STRUCTURAL STATE OF CALIFORNIA

ISAT
A Division of Tomarco Contractor Specialties

International Seismic Application Technology
14848 Northam Street, La Mirada, CA 90638
877-999-4728 (Toll Free) 714-523-0845 (Fax)
www.isatsb.com

Rev. 1
03/12/19
Page
C27-1-45

REVIEWED FOR CODE COMPLIANCE BY: William Staehlin DATE: 01/26/2024 OPM-0403 CALIFORNIA BUILDING CODE, 2022

RIGID BRACING REQUIREMENTS [7]

MECHANICAL EQUIPMENT, ROD HUNG — **MAXIMUM SEISMIC DESIGN FORCE = 1.00 G's**

Requires Use of ISAT Seismic Brackets. *Use of Any Non-ISAT Bracket Voids Engineering.*

2013 California Building Code Compliant

Equipment Maximum Operating Weight (lbs)	Support Rod Total Vertical Load [1, 8] (lbs)	Minimum Vertical Support Rod Dia. (in.)	TRANSVERSE BRACING REQUIREMENTS: Brace [3] Reaction P (lbs)	Min. Brace Assembly E - Pages	Min. Brace Anchorage [6]: Form Pour [4] Deck Page D1	Min. Brace Anchorage [6]: Metal [5] Deck Page D2	LONGITUDINAL BRACING REQUIREMENTS: Brace [3] Reaction P (lbs)	Min. Brace Assembly E - Pages	Min. Brace Anchorage [6]: Form Pour [4] Deck Page D1	Min. Brace Anchorage [6]: Metal [5] Deck Page D2
2-ROD SUPPORT			**1-Way Transverse Brace Pattern (B38.0, B38.3)**				**3-Way Trans., Longitudinal Brace Pattern (B38.0, B38.3)**			
25	81	3/8	50	R38AAEM306	N1	L1	33	R38AAEM306	N1	L1
50	161	3/8	100	R38AAEM306	N1	L1	65	R38AAEM306	N1	L1
75	242	3/8	150	R38AAEM306	N2	L2	98	R38AAEM306	N1	L1
100	323	3/8	200	R38AAEM306	N2	L2	130	R38AAEM306	N2	L2
200	645	1/2	400	R12AAEM406	N4	L4	260	R12AAEM306	N3	L3
300	968	1/2	600	R12AAEM406	N6	L6	390	R12AAEM406	N4	L4
			4-WAY SPLAY BRACING REQUIREMENTS							
4-ROD SUPPORT			**4-Way Splay Brace Pattern (B38.1, B38.4, B50.1)**							
500	804	1/2	500	R12AAEM406	N5	L5				
750	1,206	1/2	750	R12AAEM509	N8	L8				
1,000	1,609	5/8	1,000	R58AAEM506	N10	L10				
			8-WAY SPLAY BRACING REQUIREMENTS							
6-ROD SUPPORT			**8-Way Splay Brace Pattern (B38.2, B38.5)**							
600	786	3/8	300	R38AAEM306	N3	L3				
1,100	1,442	1/2	550	R12AAEM406	N6	L6				
1,750	2,293	5/8	875	R58AAEM506	N9	L9				
2,650	3,473	3/4	1,325	R34DGB1S06	N14	L14				

1. TVL = DL + Fv + ($0.2S_{DS}$/1.4 x Wp).
2. Not Used.
3. At Max. 60 Degree Brace Inclination.
4. Min. 3,000 psi NWC. Any "N Series" Connection May Be Utilized Having A Numeric Designation Equal To Or Higher Than That Shown.
5. Min. 3,000 psi NWC or LWC. Any "L Series" Connection May Be Utilized Having A Numeric Designation Equal To Or Higher Than That Shown.
6. As An Alternate, Brace Anchorage Connections To Structure May Be Employed Using Any Detail From Structural Connections Section "D" Series Details Where Assembly Design Value Meets Or Exceeds Brace Reaction.
7. For Trade Specific Bracing Installation Notes, Refer To Page 9.1.
8. Utilize Any "G" Series Vertical Support Connection Having A Design Value Equal To Or Greater Than The Corresponding "Rod Total Vertical Load".
9. Rod Loads Include A Force Increase of +/- 25% Of The Equipment Weight Due To Eccentricity Between Applied Lateral Force and Brace Arm Resistance.

REGISTERED PROFESSIONAL ENGINEER MARCIN WASAZNIK S 6612 STRUCTURAL STATE OF CALIFORNIA

ISAT
A Division of Tomarco Contractor Specialties
International Seismic Application Technology
14848 Northam Street, La Mirada, CA 90638
877-999-4728 (Toll Free) 714-523-0845 (Fax)
www.isatsb.com

Rev. 1
03/12/19
Page
C27-1-60

REVIEWED FOR CODE COMPLIANCE BY: William Staehlin DATE: 01-26-2024 CALIFORNIA BUILDING CODE, 2022

CABLE BRACING REQUIREMENTS [7]

MECHANICAL EQUIPMENT, ROD HUNG — **MAXIMUM SEISMIC DESIGN FORCE = 0.25 G's**

Requires Use of ISAT Seismic Brackets. Use of Any Non-ISAT Bracket Voids Engineering. 2013 California Building Code Compliant

Equipment Maximum Operating Weight (lbs)	Rod [1] Total Vertical Load (lbs)	Min. [8] Vertical Support Rod Dia. (in.)	4-WAY SPLAYED BRACING REQUIREMENTS: Brace [3] Reaction P (lbs)	Min. Brace Assembly E - Pages	Min. Brace Anchorage [6]: Form Pour [4] Deck Page D1	Min. Brace Anchorage [6]: Metal [5] Deck Page D2
2-ROD SUPPORT			**4-Way Splayed Brace Pattern (B39.0, B39.5)**			
25	29	3/8	7	C38AA04WS	N1	L1
50	57	3/8	14	C38AA04WS	N1	L1
75	86	3/8	22	C38AA04WS	N1	L1
100	115	3/8	29	C38AA04WS	N1	L1
200	230	3/8	58	C38AA04WS	N1	L1
300	344	3/8	87	C38AA04WS	N1	L1
4-ROD SUPPORT			**4-Way Splayed Brace Pattern (B39.1, B39.6)**			
500	371	3/8	144	C38AA04WS	N2	L2
750	557	3/8	217	C38AA04WS	N3	L3
1,000	743	3/8	289	C38AA04WS	N3	L3
2,000	1,485	5/8	577	C58AA04WS	N6	L6
4,000	2,970	3/4	1,155	C34DG06WS	N12	L12
			8-WAY SPLAYED BRACING REQUIREMENTS			
6-ROD SUPPORT			**8-Way Splayed Brace Pattern (B39.2, B39.7)**			
900	790	3/8	169	C38AA04WS	N2	L2
1,650	1,448	1/2	310	C12AA04WS	N4	L4
2,650	2,325	5/8	497	C58AA04WS	N5	L5
3,950	3,466	3/4	741	C34DG06WS	N8	L8

1. TVL = DL + Fv + ($0.2S_{DS}$/1.4 x Wp). All Terms Are Working Loads.
2. Not Used.
3. At Max. 30 Degree Brace Inclination.
4. Min. 3,000 psi NWC. Any "N Series" Connection May Be Utilized Having A Numeric Designation Equal To Or Higher Than That Shown.
5. Min. 3,000 psi NWC or LWC. Any "L Series" Connection May Be Utilized Having A Numeric Designation Equal To Or Higher Than That Shown.
6. As An Alternate, Brace Anchorage Connections To Structure May Be Employed Using Any Detail From Structural Connections Section "D" Series Details Where Assembly Design Value Meets Or Exceeds Brace Reaction.
7. For Trade Specific Bracing Installation Notes, Refer To Page 9.1.
8. Utilize Any "G" Series Vertical Support Connection Having A Design Value Equal To Or Greater Than The Corresponding "Rod Total Vertical Load".
9. Rod Loads Include A Force Increase of +/- 25% Of The Equipment Weight Due To Eccentricity Between Applied Lateral Force and Brace Arm Resistance.

REVIEWED FOR CODE COMPLIANCE
OPM-0403
BY: William Staehlin
DATE: 01-26-2024
CALIFORNIA BUILDING CODE

REGISTERED PROFESSIONAL ENGINEER MARCIN WASAZNIK S 6612 STRUCTURAL STATE OF CALIFORNIA

ISAT
A Division of Tomarco Contractor Specialties
International Seismic Application Technology
14848 Northam Street, La Mirada, CA 90638
877-999-4728 (Toll Free) 714-523-0845 (Fax)
www.isatsb.com

Rev. 2
03/12/19
Page
C28-0.25-30

CABLE BRACING REQUIREMENTS [7]

MECHANICAL EQUIPMENT, ROD HUNG — **MAXIMUM SEISMIC DESIGN FORCE = 0.25 G's**

Requires Use of ISAT Seismic Brackets. Use of Any Non-ISAT Bracket Voids Engineering. 2013 California Building Code Compliant

Equipment Maximum Operating Weight (lbs)	Rod [1] Total Vertical Load (lbs)	Min. [8] Vertical Support Rod Dia. (in.)	4-WAY SPLAYED BRACING REQUIREMENTS: Brace [3] Reaction P (lbs)	Min. Brace Assembly E - Pages	Min. Brace Anchorage [6]: Form Pour [4] Deck Page D1	Min. Brace Anchorage [6]: Metal [5] Deck Page D2
2-ROD SUPPORT			**4-Way Splayed Brace Pattern (B39.0, B39.5)**			
25	29	3/8	10	C38AA04WS	N1	L1
50	57	3/8	19	C38AA04WS	N1	L1
75	86	3/8	29	C38AA04WS	N1	L1
100	115	3/8	39	C38AA04WS	N1	L1
200	230	3/8	78	C38AA04WS	N1	L1
300	344	3/8	117	C38AA04WS	N2	L2
4-ROD SUPPORT			**4-Way Splayed Brace Pattern (B39.1, B39.6)**			
500	371	3/8	194	C38AA04WS	N2	L2
750	557	3/8	292	C38AA04WS	N3	L3
1,000	743	3/8	389	C38AA04WS	N4	L4
2,000	1,485	5/8	778	C58AA06WS	N8	L8
4,000	2,970	3/4	1,556	C34DG06TS	N16	L16
			8-WAY SPLAYED BRACING REQUIREMENTS			
6-ROD SUPPORT			**8-Way Splayed Brace Pattern (B39.2, B39.7)**			
900	790	3/8	228	C38AA04WS	N3	L3
1,650	1,448	1/2	417	C12AA04WS	N5	L5
2,650	2,325	5/8	670	C58AA04WS	N7	L7
3,950	3,466	3/4	999	C34DG06WS	N10	L10

1. TVL = DL + Fv + ($0.2S_{DS}$/1.4 x Wp). All Terms Are Working Loads.
2. Not Used.
3. At Max. 50 Degree Brace Inclination.
4. Min. 3,000 psi NWC. Any "N Series" Connection May Be Utilized Having A Numeric Designation Equal To Or Higher Than That Shown.
5. Min. 3,000 psi NWC or LWC. Any "L Series" Connection May Be Utilized Having A Numeric Designation Equal To Or Higher Than That Shown.
6. As An Alternate, Brace Anchorage Connections To Structure May Be Employed Using Any Detail From Structural Connections Section "D" Series Details Where Assembly Design Value Meets Or Exceeds Brace Reaction.
7. For Trade Specific Bracing Installation Notes, Refer To Page 9.1.
8. Utilize Any "G" Series Vertical Support Connection Having A Design Value Equal To Or Greater Than The Corresponding "Rod Total Vertical Load".
9. Rod Loads Include A Force Increase of +/- 25% Of The Equipment Weight Due To Eccentricity Between Applied Lateral Force and Brace Arm Resistance.

REVIEWED FOR CODE COMPLIANCE
OPM-0403
BY: William Staehlin
DATE: 01-26-2024
CALIFORNIA BUILDING CODE

REGISTERED PROFESSIONAL ENGINEER MARCIN WASAZNIK S-6612 STRUCTURAL STATE OF CALIFORNIA

ISAT
A Division of Tomarco Contractor Specialties
International Seismic Application Technology
14848 Northam Street, La Mirada, CA 90638
877-999-4728 (Toll Free) 714-523-0845 (Fax)
www.isatsb.com

Rev. 2
03/12/19
Page
C28-0.25-45

CABLE BRACING REQUIREMENTS [7]

MECHANICAL EQUIPMENT, ROD HUNG — **MAXIMUM SEISMIC DESIGN FORCE = 0.25 G's**

Requires Use of ISAT Seismic Brackets. Use of Any Non-ISAT Bracket Voids Engineering. 2013 California Building Code Compliant

Equipment Maximum Operating Weight (lbs)	Rod [1] Total Vertical Load (lbs)	Min. [8] Vertical Support Rod Dia. (in.)	4-WAY SPLAYED BRACING REQUIREMENTS			
			Brace [3] Reaction P (lbs)	Min. Brace Assembly E - Pages	Min. Brace Anchorage [6] Form Pour [4] Deck Page D1	Min. Brace Anchorage [6] Metal [5] Deck Page D2
2-ROD SUPPORT			4-Way Splayed Brace Pattern (B39.0, B39.3, B39.5)			
25	29	3/8	13	C38AA04WS	N1	L1
50	57	3/8	25	C38AA04WS	N1	L1
75	86	3/8	38	C38AA04WS	N1	L1
100	115	3/8	50	C38AA04WS	N1	L1
200	230	3/8	100	C38AA04WS	N1	L1
300	344	3/8	150	C38AA04WS	N2	L2
4-ROD SUPPORT			4-Way Splayed Brace Pattern (B39.1, B39.4, B39.6, B50.2)			
500	371	3/8	250	C38AA04WS	N3	L3
750	557	3/8	375	C38AA04WS	N4	L4
1,000	743	1/2	500	C12AA04WS	N5	L5
2,000	1,485	5/8	1,000	C58AA06WS	N10	L10
			8-WAY SPLAYED BRACING REQUIREMENTS			
6-ROD SUPPORT			8-Way Splayed Brace Pattern (B39.2, B39.7)			
900	790	3/8	293	C38AA04WS	N3	L3
1,650	1,448	1/2	536	C12AA04WS	N6	L6
2,650	2,325	5/8	861	C58AA06WS	N9	L9
3,950	3,466	3/4	1,284	C34DG06WS	N13	L13

1. TVL = DL + Fv + ($0.2S_{DS}$/1.4 x Wp). All Terms Are Working Loads.
2. Not Used.
3. At Max. 60 Degree Brace Inclination.
4. Min. 3,000 psi NWC. Any "N Series" Connection May Be Utilized Having A Numeric Designation Equal To Or Higher Than That Shown.
5. Min. 3,000 psi NWC or LWC. Any "L Series" Connection May Be Utilized Having A Numeric Designation Equal To Or Higher Than That Shown.
6. As An Alternate, Brace Anchorage Connections To Structure May Be Employed Using Any Detail From Structural Connections Section "D" Series Details Where Assembly Design Value Meets Or Exceeds Brace Reaction.
7. For Trade Specific Bracing Installation Notes, Refer To Page 9.1.
8. Utilize Any "G" Series Vertical Support Connection Having A Design Value Equal To Or Greater Than The Corresponding "Rod Total Vertical Load".
9. Rod Loads Include A Force Increase of +/- 25% Of The Equipment Weight Due To Eccentricity Between Applied Lateral Force and Brace Arm Resistance.

REGISTERED PROFESSIONAL ENGINEER MARCIN WASAZNIK S-6612 STRUCTURAL STATE OF CALIFORNIA

ISAT
A Division of Tomarco Contractor Specialties

International Seismic Application Technology
14848 Northam Street, La Mirada, CA 90638
877-999-4728 (Toll Free) 714-523-0845 (Fax)
www.isatsb.com

Rev. 2
03/12/19
Page
C28-0.25-60

REVIEWED FOR CODE COMPLIANCE BY: William Staehlin DATE: 01-26-2024 OPM-0403 CALIFORNIA BUILDING CODE

CABLE BRACING REQUIREMENTS [7]

MECHANICAL EQUIPMENT, ROD HUNG — **MAXIMUM SEISMIC DESIGN FORCE = 0.50 G's**

Requires Use of ISAT Seismic Brackets. Use of Any Non-ISAT Bracket Voids Engineering. 2013 California Building Code Compliant

Equipment Maximum Operating Weight (lbs)	Rod [1] Total Vertical Load (lbs)	Min. [8] Vertical Support Rod Dia. (in.)	4-WAY SPLAYED BRACING REQUIREMENTS: Brace [3] Reaction P (lbs)	Min. Brace Assembly E - Pages	Min. Brace Anchorage [6]: Form Pour [4] Deck Page D1	Min. Brace Anchorage [6]: Metal [5] Deck Page D2
2-ROD SUPPORT			**4-Way Splayed Brace Pattern (B39.0, B39.5)**			
25	29	3/8	14	C38AA04WS	N1	L1
50	57	3/8	29	C38AA04WS	N1	L1
75	86	3/8	43	C38AA04WS	N1	L1
100	115	3/8	58	C38AA04WS	N1	L1
200	230	3/8	115	C38AA04WS	N2	L2
300	344	3/8	173	C38AA04WS	N2	L2
4-ROD SUPPORT			**4-Way Splayed Brace Pattern (B39.1, B39.6)**			
500	371	3/8	289	C38AA04WS	N3	L3
750	557	3/8	433	C38AA04WS	N5	L5
1,000	743	3/8	577	C38AA04WS	N6	L6
2,000	1,485	5/8	1,155	C58AA06WS	N12	L12
2,500	1,856	5/8	1,443	C58AA06WS	N15	L15
			8-WAY SPLAYED BRACING REQUIREMENTS			
6-ROD SUPPORT			**8-Way Splayed Brace Pattern (B39.2, B39.7)**			
900	790	3/8	338	C38AA04WS	N4	L4
1,650	1,448	1/2	619	C12AA04WS	N7	L7
2,650	2,325	5/8	994	C58AA06WS	N10	L10
3,150	2,764	3/4	1,182	C34DG06WS	N12	L12

1. TVL = DL + Fv + ($0.2S_{DS}$/1.4 x Wp). All Terms Are Working Loads.
2. Not Used.
3. At Max. 30 Degree Brace Inclination.
4. Min. 3,000 psi NWC. Any "N Series" Connection May Be Utilized Having A Numeric Designation Equal To Or Higher Than That Shown.
5. Min. 3,000 psi NWC or LWC. Any "L Series" Connection May Be Utilized Having A Numeric Designation Equal To Or Higher Than That Shown.
6. As An Alternate, Brace Anchorage Connections To Structure May Be Employed Using Any Detail From Structural Connections Section "D" Series Details Where Assembly Design Value Meets Or Exceeds Brace Reaction.
7. For Trade Specific Bracing Installation Notes, Refer To Page 9.1.
8. Utilize Any "G" Series Vertical Support Connection Having A Design Value Equal To Or Greater Than The Corresponding "Rod Total Vertical Load".
9. Rod Loads Include A Force Increase of +/- 25% Of The Equipment Weight Due To Eccentricity Between Applied Lateral Force and Brace Arm Resistance.

REVIEWED FOR CODE COMPLIANCE BY: William Staehlin DATE: 01-26-2024 OPM-0403 CALIFORNIA BUILDING CODE

REGISTERED PROFESSIONAL ENGINEER MARCIN WASAZNIK S 6612 STRUCTURAL STATE OF CALIFORNIA

ISAT
A Division of Tomarco Contractor Specialties
International Seismic Application Technology
14848 Northam Street, La Mirada, CA 90638
877-999-4728 (Toll Free) 714-523-0845 (Fax)
www.isatsb.com

Rev. 2
03/12/19
Page
C28-0.5-30

CABLE BRACING REQUIREMENTS [7]

MECHANICAL EQUIPMENT, ROD HUNG — **MAXIMUM SEISMIC DESIGN FORCE = 0.50 G's**

Requires Use of ISAT Seismic Brackets. Use of Any Non-ISAT Bracket Voids Engineering. 2013 California Building Code Compliant

Equipment Maximum Operating Weight (lbs)	Rod [1] Total Vertical Load (lbs)	Min. [8] Vertical Support Rod Dia. (in.)	4-WAY SPLAYED BRACING REQUIREMENTS: Brace [3] Reaction P (lbs)	Min. Brace Assembly E - Pages	Min. Brace Anchorage [6]: Form Pour [4] Deck Page D1	Min. Brace Anchorage [6]: Metal [5] Deck Page D2
2-ROD SUPPORT			**4-Way Splayed Brace Pattern (B39.0, B39.5)**			
25	25	3/8	19	C38AA04WS	N1	L1
50	51	3/8	39	C38AA04WS	N1	L1
75	76	3/8	58	C38AA04WS	N1	L1
100	102	3/8	78	C38AA04WS	N1	L1
200	203	3/8	156	C38AA04WS	N2	L2
300	305	3/8	233	C38AA04WS	N3	L3
4-ROD SUPPORT			**4-Way Splayed Brace Pattern (B39.1, B39.6)**			
1,000	658	1/2	778	C12AA06WS	N8	L8
2,000	1,316	5/8	1,556	C58DG06TS	N16	L16
			8-WAY SPLAYED BRACING REQUIREMENTS			
6-ROD SUPPORT			**8-Way Splayed Brace Pattern (B39.2, B39.7)**			
1,000	777	3/8	506	C38AA04WS	N6	L6
1,850	1,438	1/2	935	C12AA06WS	N10	L10
3,000	2,332	5/8	1,517	C58DG06TS	N16	L16
3,100	2,410	3/4	1,567	C34DG06TS	N16	L16

1. TVL = DL + Fv + ($0.2S_{DS}$/1.4 x Wp). All Terms Are Working Loads.
2. Not Used.
3. At Max. 50 Degree Brace Inclination.
4. Min. 3,000 psi NWC. Any "N Series" Connection May Be Utilized Having A Numeric Designation Equal To Or Higher Than That Shown.
5. Min. 3,000 psi NWC or LWC. Any "L Series" Connection May Be Utilized Having A Numeric Designation Equal To Or Higher Than That Shown.
6. As An Alternate, Brace Anchorage Connections To Structure May Be Employed Using Any Detail From Structural Connections Section "D" Series Details Where Assembly Design Value Meets Or Exceeds Brace Reaction.
7. For Trade Specific Bracing Installation Notes, Refer To Page 9.1.
8. Utilize Any "G" Series Vertical Support Connection Having A Design Value Equal To Or Greater Than The Corresponding "Rod Total Vertical Load".
9. Rod Loads Include A Force Increase of +/- 25% Of The Equipment Weight Due To Eccentricity Between Applied Lateral Force and Brace Arm Resistance.

REVIEWED FOR CODE COMPLIANCE
OPM-0403
BY: William Staehlin
DATE: 01-26-2024
CALIFORNIA BUILDING CODE

REGISTERED PROFESSIONAL ENGINEER MARCIN WASAZNIK S 6612 STRUCTURAL STATE OF CALIFORNIA

ISAT
A Division of Tomarco Contractor Specialties
International Seismic Application Technology
14848 Northam Street, La Mirada, CA 90638
877-999-4728 (Toll Free) 714-523-0845 (Fax)
www.isatsb.com

Rev. 2
03/12/19
Page
C28-0.5-45

CABLE BRACING REQUIREMENTS [7]

MECHANICAL EQUIPMENT, ROD HUNG — **MAXIMUM SEISMIC DESIGN FORCE = 0.50 G's**

Requires Use of ISAT Seismic Brackets. Use of Any Non-ISAT Bracket Voids Engineering. 2013 California Building Code Compliant

Equipment Maximum Operating Weight (lbs)	Rod [1] Total Vertical Load (lbs)	Min. [8] Vertical Support Rod Dia. (in.)	4-WAY SPLAYED BRACING REQUIREMENTS			
			Brace [3] Reaction P (lbs)	Min. Brace Assembly E - Pages	Min. Brace Anchorage [6] Form Pour [4] Deck Page D1	Min. Brace Anchorage [6] Metal [5] Deck Page D2
2-ROD SUPPORT			4-Way Splayed Brace Pattern (B39.0, B39.3, B39.5)			
25	29	3/8	25	C38AA04WS	N1	L1
50	57	3/8	50	C38AA04WS	N1	L1
75	86	3/8	75	C38AA04WS	N1	L1
100	115	3/8	100	C38AA04WS	N1	L1
200	230	3/8	200	C38AA04WS	N2	L2
300	344	3/8	300	C38AA04WS	N3	L3
4-ROD SUPPORT			4-Way Splayed Brace Pattern (B39.1, B39.4, B39.6, B50.2)			
500	371	1/2	500	C12AA04WS	N5	L5
750	557	1/2	750	C12AA06WS	N8	L8
1,000	743	1/2	1,000	C12AA06WS	N10	L10
1,400	1,040	5/8	1,400	C58AA06WS	N14	L14
			8-WAY SPLAYED BRACING REQUIREMENTS			
6-ROD SUPPORT			8-Way Splayed Brace Pattern (B39.2, B39.7)			
900	790	3/8	585	C38AA04WS	N6	L6
1,650	1,448	1/2	1,073	C12AA06WS	N11	L11
2,250	1,974	5/8	1,463	C58AA06WS	N15	L15

1. TVL = DL + Fv + ($0.2S_{DS}$/1.4 x Wp). All Terms Are Working Loads.
2. Not Used.
3. At Max. 60 Degree Brace Inclination.
4. Min. 3,000 psi NWC. Any "N Series" Connection May Be Utilized Having A Numeric Designation Equal To Or Higher Than That Shown.
5. Min. 3,000 psi NWC or LWC. Any "L Series" Connection May Be Utilized Having A Numeric Designation Equal To Or Higher Than That Shown.
6. As An Alternate, Brace Anchorage Connections To Structure May Be Employed Using Any Detail From Structural Connections Section "D" Series Details Where Assembly Design Value Meets Or Exceeds Brace Reaction.
7. For Trade Specific Bracing Installation Notes, Refer To Page 9.1.
8. Utilize Any "G" Series Vertical Support Connection Having A Design Value Equal To Or Greater Than The Corresponding "Rod Total Vertical Load".
9. Rod Loads Include A Force Increase of +/- 25% Of The Equipment Weight Due To Eccentricity Between Applied Lateral Force and Brace Arm Resistance.

REVIEWED FOR CODE COMPLIANCE BY: William Staehlin DATE: 01-26-2024 OPM-0403 CALIFORNIA BUILDING CODE

REGISTERED PROFESSIONAL ENGINEER MARCIN WASAZNIK S 6612 STRUCTURAL STATE OF CALIFORNIA

ISAT
A Division of Tomarco Contractor Specialties
International Seismic Application Technology
14848 Northam Street, La Mirada, CA 90638
877-999-4728 (Toll Free) 714-523-0845 (Fax)
www.isatsb.com

Rev. 2
03/12/19
Page
C28-0.5-60

CABLE BRACING REQUIREMENTS [7]

MECHANICAL EQUIPMENT, ROD HUNG — **MAXIMUM SEISMIC DESIGN FORCE = 0.75 G's**

Requires Use of ISAT Seismic Brackets. Use of Any Non-ISAT Bracket Voids Engineering. 2013 California Building Code Compliant

Equipment Maximum Operating Weight (lbs)	Rod [1] Total Vertical Load (lbs)	Min. [8] Vertical Support Rod Dia. (in.)	4-WAY SPLAYED BRACING REQUIREMENTS			
			Brace [3] Reaction P (lbs)	Min. Brace Assembly E - Pages	Min. Brace Anchorage [6] Form Pour [4] Deck Page D1	Min. Brace Anchorage [6] Metal [5] Deck Page D2
2-ROD SUPPORT			4-Way Splayed Brace Pattern (B39.0, B39.5)			
25	29	3/8	22	C38AA04WS	N1	L1
50	57	3/8	43	C38AA04WS	N1	L1
75	86	3/8	65	C38AA04WS	N1	L1
100	115	3/8	87	C38AA04WS	N1	L1
200	230	3/8	173	C38AA04WS	N2	L2
300	344	3/8	260	C38AA04WS	N3	L3
4-ROD SUPPORT			4-Way Splayed Brace Pattern (B39.1, B39.6)			
500	371	3/8	433	C38AA04WS	N5	L5
750	557	3/8	650	C38AA04WS	N7	L7
1,000	743	1/2	866	C12AA06WS	N9	L9
1,600	1,188	1/2	1,386	C12AA06WS	N14	L14
			8-WAY SPLAYED BRACING REQUIREMENTS			
6-ROD SUPPORT			8-Way Splayed Brace Pattern (B39.2, B39.7)			
900	790	3/8	507	C38AA04WS	N6	L6
1,650	1,448	1/2	929	C12AA06WS	N10	L10
2,550	2,238	5/8	1,435	C58AA06WS	N15	L15

1. TVL = DL + Fv + ($0.2S_{DS}$/1.4 x Wp). All Terms Are Working Loads.
2. Not Used.
3. At Max. 30 Degree Brace Inclination.
4. Min. 3,000 psi NWC. Any "N Series" Connection May Be Utilized Having A Numeric Designation Equal To Or Higher Than That Shown.
5. Min. 3,000 psi NWC or LWC. Any "L Series" Connection May Be Utilized Having A Numeric Designation Equal To Or Higher Than That Shown.
6. As An Alternate, Brace Anchorage Connections To Structure May Be Employed Using Any Detail From Structural Connections Section "D" Series Details Where Assembly Design Value Meets Or Exceeds Brace Reaction.
7. For Trade Specific Bracing Installation Notes, Refer To Page 9.1.
8. Utilize Any "G" Series Vertical Support Connection Having A Design Value Equal To Or Greater Than The Corresponding "Rod Total Vertical Load".
9. Rod Loads Include A Force Increase of +/- 25% Of The Equipment Weight Due To Eccentricity Between Applied Lateral Force and Brace Arm Resistance.

REVIEWED FOR CODE COMPLIANCE BY: William Staehlin DATE: 01-26-2024 OPM-0403 HCAI CALIFORNIA BUILDING CODE

REGISTERED PROFESSIONAL ENGINEER MARCIN WASAZNIK S 6612 STRUCTURAL STATE OF CALIFORNIA

ISAT
A Division of Tomarco Contractor Specialties
International Seismic Application Technology
14848 Northam Street, La Mirada, CA 90638
877-999-4728 (Toll Free) 714-523-0845 (Fax)
www.isatsb.com

Rev. 2
03/12/19
Page
C28-0.75-30

CABLE BRACING REQUIREMENTS [7]

MECHANICAL EQUIPMENT, ROD HUNG — **MAXIMUM SEISMIC DESIGN FORCE = 0.75 G's**

Requires Use of ISAT Seismic Brackets. Use of Any Non-ISAT Bracket Voids Engineering. 2013 California Building Code Compliant

Equipment Maximum Operating Weight (lbs)	Rod [1] Total Vertical Load (lbs)	Min. [8] Vertical Support Rod Dia. (in.)	4-WAY SPLAYED BRACING REQUIREMENTS			
			Brace [3] Reaction P (lbs)	Min. Brace Assembly E - Pages	Min. Brace Anchorage [6] Form Pour [4] Deck Page D1	Min. Brace Anchorage [6] Metal [5] Deck Page D2
2-ROD SUPPORT			**4-Way Splayed Brace Pattern (B39.0, B39.5)**			
25	29	3/8	29	C38AA04WS	N1	L1
50	57	3/8	58	C38AA04WS	N1	L1
75	86	3/8	88	C38AA04WS	N1	L1
100	115	3/8	117	C38AA04WS	N2	L2
200	230	3/8	233	C38AA04WS	N3	L3
300	344	3/8	350	C38AA04WS	N4	L4
4-ROD SUPPORT			**4-Way Splayed Brace Pattern (B39.1, B39.6)**			
500	371	1/2	583	C12AA04WS	N6	L6
750	557	1/2	875	C12AA06WS	N9	L9
1,000	743	1/2	1,167	C12AA06WS	N12	L12
1,500	1,114	5/8	1,750	C58DG06TS	N18	L18
			8-WAY SPLAYED BRACING REQUIREMENTS			
6-ROD SUPPORT			**8-Way Splayed Brace Pattern (B39.2, B39.7)**			
850	746	3/8	645	C38AA04WS	N7	L7
1,650	1,448	1/2	1,251	C12AA06WS	N13	L13
2,400	2,106	5/8	1,820	C58DG06TS	N19	L19

1. TVL = DL + Fv + ($0.2S_{DS}$/1.4 x Wp). All Terms Are Working Loads.
2. Not Used.
3. At Max. 50 Degree Brace Inclination.
4. Min. 3,000 psi NWC. Any "N Series" Connection May Be Utilized Having A Numeric Designation Equal To Or Higher Than That Shown.
5. Min. 3,000 psi NWC or LWC. Any "L Series" Connection May Be Utilized Having A Numeric Designation Equal To Or Higher Than That Shown.
6. As An Alternate, Brace Anchorage Connections To Structure May Be Employed Using Any Detail From Structural Connections Section "D" Series Details Where Assembly Design Value Meets Or Exceeds Brace Reaction.
7. For Trade Specific Bracing Installation Notes, Refer To Page 9.1.
8. Utilize Any "G" Series Vertical Support Connection Having A Design Value Equal To Or Greater Than The Corresponding "Rod Total Vertical Load".
9. Rod Loads Include A Force Increase of +/- 25% Of The Equipment Weight Due To Eccentricity Between Applied Lateral Force and Brace Arm Resistance.

REVIEWED FOR CODE COMPLIANCE BY: William Staehlin DATE: 01-26-2024 OPM-0403 HCAI CALIFORNIA BUILDING CODES

REGISTERED PROFESSIONAL ENGINEER MARCIN WASAZNIK S 6612 STRUCTURAL STATE OF CALIFORNIA

ISAT
A Division of Tomarco Contractor Specialties
International Seismic Application Technology
14848 Northam Street, La Mirada, CA 90638
877-999-4728 (Toll Free) 714-523-0845 (Fax)
www.isatsb.com

Rev. 2
03/12/19
Page
C28-0.75-45

CABLE BRACING REQUIREMENTS [7]

MECHANICAL EQUIPMENT, ROD HUNG — **MAXIMUM SEISMIC DESIGN FORCE = 0.75 G's**

Requires Use of ISAT Seismic Brackets. Use of Any Non-ISAT Bracket Voids Engineering. 2013 California Building Code Compliant

Equipment Maximum Operating Weight (lbs)	Rod [1] Total Vertical Load (lbs)	Min. [8] Vertical Support Rod Dia. (in.)	4-WAY SPLAYED BRACING REQUIREMENTS			
			Brace [3] Reaction P (lbs)	Min. Brace Assembly E - Pages	Min. Brace Anchorage [6] Form Pour [4] Deck Page D1	Min. Brace Anchorage [6] Metal [5] Deck Page D2
2-ROD SUPPORT			4-Way Splayed Brace Pattern (B39.0, B39.3, B39.5)			
25	29	3/8	38	C38AA04WS	N1	L1
50	57	3/8	75	C38AA04WS	N1	L1
75	86	3/8	113	C38AA04WS	N2	L2
100	115	3/8	150	C38AA04WS	N2	L2
200	230	3/8	300	C38AA04WS	N3	L3
300	344	1/2	450	C12AA04WS	N5	L5
4-ROD SUPPORT			4-Way Splayed Brace Pattern (B39.1, B39.4, B39.6, B50.2)			
500	371	1/2	750	C12AA06WS	N8	L8
750	557	1/2	1,125	C12AA06WS	N12	L12
900	668	5/8	1,350	C58AA06WS	N14	L14
6-ROD SUPPORT			8-WAY SPLAYED BRACING REQUIREMENTS 8-Way Splayed Brace Pattern (B39.2, B39.7)			
550	483	3/8	536	C38AA04WS	N6	L6
1,500	1,316	1/2	1,463	C12AA06WS	N15	L15

1. TVL = DL + Fv + ($0.2S_{DS}$/1.4 x Wp). All Terms Are Working Loads.
2. Not Used.
3. At Max. 60 Degree Brace Inclination.
4. Min. 3,000 psi NWC. Any "N Series" Connection May Be Utilized Having A Numeric Designation Equal To Or Higher Than That Shown.
5. Min. 3,000 psi NWC or LWC. Any "L Series" Connection May Be Utilized Having A Numeric Designation Equal To Or Higher Than That Shown.
6. As An Alternate, Brace Anchorage Connections To Structure May Be Employed Using Any Detail From Structural Connections Section "D" Series Details Where Assembly Design Value Meets Or Exceeds Brace Reaction.
7. For Trade Specific Bracing Installation Notes, Refer To Page 9.1.
8. Utilize Any "G" Series Vertical Support Connection Having A Design Value Equal To Or Greater Than The Corresponding "Rod Total Vertical Load".
9. Rod Loads Include A Force Increase of +/- 25% Of The Equipment Weight Due To Eccentricity Between Applied Lateral Force and Brace Arm Resistance.

REVIEWED FOR CODE COMPLIANCE
OPM-0403
BY: William Staehlin
DATE: 01-26-2024
CALIFORNIA BUILDING CODE

REGISTERED PROFESSIONAL ENGINEER MARCIN WASAZNIK S 6612 STRUCTURAL STATE OF CALIFORNIA

ISAT
A Division of Tomarco Contractor Specialties
International Seismic Application Technology
14848 Northam Street, La Mirada, CA 90638
877-999-4728 (Toll Free) 714-523-0845 (Fax)
www.isatsb.com

Rev. 2
03/12/19
Page
C28-0.75-60

CABLE BRACING REQUIREMENTS [7]

MECHANICAL EQUIPMENT, ROD HUNG — **MAXIMUM SEISMIC DESIGN FORCE = 1.00 G's**

Requires Use of ISAT Seismic Brackets. Use of Any Non-ISAT Bracket Voids Engineering. 2013 California Building Code Compliant

Equipment Maximum Operating Weight (lbs)	Rod [1] Total Vertical Load (lbs)	Min. [8] Vertical Support Rod Dia. (in.)	4-WAY SPLAYED BRACING REQUIREMENTS: Brace [3] Reaction P (lbs)	Min. Brace Assembly E - Pages	Min. Brace Anchorage [6]: Form Pour [4] Deck Page D1	Min. Brace Anchorage [6]: Metal [5] Deck Page D2
2-ROD SUPPORT			**4-Way Splayed Brace Pattern (B39.0, B39.5)**			
25	29	3/8	29	C38AA04WS	N1	L1
50	57	3/8	58	C38AA04WS	N1	L1
75	86	3/8	87	C38AA04WS	N1	L1
100	115	3/8	115	C38AA04WS	N2	L2
200	230	3/8	231	C38AA04WS	N3	L3
300	344	3/8	346	C38AA04WS	N4	L4
4-ROD SUPPORT			**4-Way Splayed Brace Pattern (B39.1, B39.6)**			
500	371	3/8	577	C38AA04WS	N6	L6
750	557	1/2	866	C12AA06WS	N9	L9
1,000	743	1/2	1,155	C12AA06WS	N12	L12
1,200	891	1/2	1,386	C12AA06WS	N14	L14
1,250	928	1/2	1,443	C12AA06WS	N15	L15
			8-WAY SPLAYED BRACING REQUIREMENTS			
6-ROD SUPPORT			**8-Way Splayed Brace Pattern (B39.2, B39.7)**			
900	790	3/8	675	C38AA06WS	N7	L7
1,650	1,448	1/2	1,238	C12AA06WS	N13	L13
1,900	1,667	5/8	1,426	C58AA06WS	N15	L15

1. TVL = DL + Fv + ($0.2S_{DS}$/1.4 x Wp). All Terms Are Working Loads.
2. Not Used.
3. At Max. 30 Degree Brace Inclination.
4. Min. 3,000 psi NWC. Any "N Series" Connection May Be Utilized Having A Numeric Designation Equal To Or Higher Than That Shown.
5. Min. 3,000 psi NWC or LWC. Any "L Series" Connection May Be Utilized Having A Numeric Designation Equal To Or Higher Than That Shown.
6. As An Alternate, Brace Anchorage Connections To Structure May Be Employed Using Any Detail From Structural Connections Section "D" Series Details Where Assembly Design Value Meets Or Exceeds Brace Reaction.
7. For Trade Specific Bracing Installation Notes, Refer To Page 9.1.
8. Utilize Any "G" Series Vertical Support Connection Having A Design Value Equal To Or Greater Than The Corresponding "Rod Total Vertical Load".
9. Rod Loads Include A Force Increase of +/- 25% Of The Equipment Weight Due To Eccentricity Between Applied Lateral Force and Brace Arm Resistance.

REVIEWED FOR CODE COMPLIANCE
HCAI
OPM-0403
BY: William Staehlin
DATE: 01-26-2024
CALIFORNIA BUILDING CODE

REGISTERED PROFESSIONAL ENGINEER
MARCIN WASAZNIK
S 6612
STRUCTURAL
STATE OF CALIFORNIA

ISAT
A Division of Tomarco Contractor Specialties
International Seismic Application Technology
14848 Northam Street, La Mirada, CA 90638
877-999-4728 (Toll Free) 714-523-0845 (Fax)
www.isatsb.com

Rev. 2
03/12/19
Page
C28-1-30

CABLE BRACING REQUIREMENTS [7]

MECHANICAL EQUIPMENT, ROD HUNG — **MAXIMUM SEISMIC DESIGN FORCE = 1.00 G's**

Requires Use of ISAT Seismic Brackets. *Use of Any Non-ISAT Bracket Voids Engineering.* *2013 California Building Code Compliant*

Equipment Maximum Operating Weight (lbs)	Rod [1] Total Vertical Load (lbs)	Min. [8] Vertical Support Rod Dia. (in.)	4-WAY SPLAYED BRACING REQUIREMENTS			
			Brace [3] Reaction P (lbs)	Min. Brace Assembly E - Pages	Min. Brace Anchorage [6] Form Pour [4] Deck Page D1	Min. Brace Anchorage [6] Metal [5] Deck Page D2
2-ROD SUPPORT			**4-Way Splayed Brace Pattern (B39.0, B39.5)**			
25	29	3/8	39	C38AA04WS	N1	L1
50	57	3/8	78	C38AA04WS	N1	L1
75	86	3/8	117	C38AA04WS	N2	L2
100	115	3/8	156	C38AA04WS	N2	L2
200	230	3/8	311	C38AA04WS	N4	L4
300	344	1/2	467	C12AA04WS	N5	L5
4-ROD SUPPORT			**4-Way Splayed Brace Pattern (B39.1, B39.6)**			
500	371	1/2	778	C12AA06WS	N8	L8
750	557	1/2	1,167	C12AA06WS	N12	L12
1,000	743	5/8	1,556	C58DG06TS	N16	L16
1,100	817	5/8	1,711	C58DG06TS	N18	L18
			8-WAY SPLAYED BRACING REQUIREMENTS			
6-ROD SUPPORT			**8-Way Splayed Brace Pattern (B39.2, B39.7)**			
650	570	3/8	657	C38AA04WS	N7	L7
1,650	1,448	1/2	1,669	C12GG06CC	N17	L17
1,800	1,580	5/8	1,820	C58DG06TS	N19	L19

1. TVL = DL + Fv + ($0.2S_{DS}$/1.4 x Wp). All Terms Are Working Loads.
2. Not Used.
3. At Max. 50 Degree Brace Inclination.
4. Min. 3,000 psi NWC. Any "N Series" Connection May Be Utilized Having A Numeric Designation Equal To Or Higher Than That Shown.
5. Min. 3,000 psi NWC or LWC. Any "L Series" Connection May Be Utilized Having A Numeric Designation Equal To Or Higher Than That Shown.
6. As An Alternate, Brace Anchorage Connections To Structure May Be Employed Using Any Detail From Structural Connections Section "D" Series Details Where Assembly Design Value Meets Or Exceeds Brace Reaction.
7. For Trade Specific Bracing Installation Notes, Refer To Page 9.1.
8. Utilize Any "G" Series Vertical Support Connection Having A Design Value Equal To Or Greater Than The Corresponding "Rod Total Vertical Load".
9. Rod Loads Include A Force Increase of +/- 25% Of The Equipment Weight Due To Eccentricity Between Applied Lateral Force and Brace Arm Resistance.

REVIEWED FOR CODE COMPLIANCE BY: William Staehlin DATE: 01-26-2024 OPM-0403 CALIFORNIA BUILDING CODE

REGISTERED PROFESSIONAL ENGINEER MARCIN WASAZNIK S 6612 STRUCTURAL STATE OF CALIFORNIA

ISAT
A Division of Tomarco Contractor Specialties
International Seismic Application Technology
14848 Northam Street, La Mirada, CA 90638
877-999-4728 (Toll Free) 714-523-0845 (Fax)
www.isatsb.com

Rev. 2
03/12/19
Page
C28-1-45

CABLE BRACING REQUIREMENTS [7]

MECHANICAL EQUIPMENT, ROD HUNG — **MAXIMUM SEISMIC DESIGN FORCE = 1.00 G's**

Requires Use of ISAT Seismic Brackets. Use of Any Non-ISAT Bracket Voids Engineering. 2013 California Building Code Compliant

Equipment Maximum Operating Weight (lbs)	Rod [1] Total Vertical Load (lbs)	Min. [8] Vertical Support Rod Dia. (in.)	4-WAY SPLAYED BRACING REQUIREMENTS			
			Brace [3] Reaction P (lbs)	Min. Brace Assembly E - Pages	Min. Brace Anchorage [6] Form Pour [4] Deck Page D1	Min. Brace Anchorage [6] Metal [5] Deck Page D2
2-ROD SUPPORT			4-Way Splayed Brace Pattern (B39.0, B39.3, B39.5)			
25	29	3/8	50	C38AA04WS	N1	L1
50	57	3/8	100	C38AA04WS	N1	L1
75	86	3/8	150	C38AA04WS	N2	L2
100	115	3/8	200	C38AA04WS	N2	L2
200	230	1/2	400	C12AA04WS	N4	L4
300	344	1/2	600	C12AA04WS	N6	L6
4-ROD SUPPORT			4-Way Splayed Brace Pattern (B39.1, B39.4, B39.6, B50.2)			
500	371	1/2	1,000	C12AA06WS	N10	L10
700	520	5/8	1,400	C58AA06WS	N14	L14
			8-WAY SPLAYED BRACING REQUIREMENTS			
6-ROD SUPPORT			8-Way Splayed Brace Pattern (B39.2, B39.7)			
400	351	3/8	520	C38AA04WS	N6	L6
1,100	965	1/2	1,430	C12AA06WS	N15	L15

1. TVL = DL + Fv + ($0.2S_{DS}$/1.4 x Wp). All Terms Are Working Loads.
2. Not Used.
3. At Max. 60 Degree Brace Inclination.
4. Min. 3,000 psi NWC. Any "N Series" Connection May Be Utilized Having A Numeric Designation Equal To Or Higher Than That Shown.
5. Min. 3,000 psi NWC or LWC. Any "L Series" Connection May Be Utilized Having A Numeric Designation Equal To Or Higher Than That Shown.
6. As An Alternate, Brace Anchorage Connections To Structure May Be Employed Using Any Detail From Structural Connections Section "D" Series Details Where Assembly Design Value Meets Or Exceeds Brace Reaction.
7. For Trade Specific Bracing Installation Notes, Refer To Page 9.1.
8. Utilize Any "G" Series Vertical Support Connection Having A Design Value Equal To Or Greater Than The Corresponding "Rod Total Vertical Load".
9. Rod Loads Include A Force Increase of +/- 25% Of The Equipment Weight Due To Eccentricity Between Applied Lateral Force and Brace Arm Resistance.

REVIEWED FOR CODE COMPLIANCE
OPM-0403
BY: William Staehlin
DATE: 01-26-2024
CALIFORNIA BUILDING CODE 2019

REGISTERED PROFESSIONAL ENGINEER
MARCIN WASAZNIK
S 6612
STRUCTURAL
STATE OF CALIFORNIA

ISAT
A Division of Tomarco Contractor Specialties

International Seismic Application Technology
14848 Northam Street, La Mirada, CA 90638
877-999-4728 (Toll Free) 714-523-0845 (Fax)
www.isatsb.com

Rev. 2
03/12/19
Page
C28-1-60

RIGID BRACING REQUIREMENTS [7]

SINGLE HUNG EMT CONDUIT [9] — MAXIMUM SEISMIC DESIGN FORCE = 0.25 G's

Requires Use of ISAT Seismic Brackets. Use of Any Non-ISAT Bracket Voids Engineering. 2013 California Building Code Compliant

Maximum Pipe Diameter (in.)	Max. Vertical Support Spacing (ft.)	Rod [1] Total Vertical Load (lbs)	Min. [8] Vertical Support Rod Dia. (in.)	TRANSVERSE BRACING REQUIREMENTS: Max. [2] Brace Spacing (ft.)	Brace [3] Reaction P (lbs)	Min. Brace Assembly E - Pages	Min. Brace Anchorage [6]: Form Pour [4] Deck Page D1	Metal [5] Deck Page D2	LONGITUDINAL BRACING REQUIREMENTS: Max. [2] Brace Spacing (ft.)	Brace [3] Reaction P (lbs)	Min. Brace Assembly E - Pages	Min. Brace Anchorage [6]: Form Pour [4] Deck Page D1	Metal [5] Deck Page D2
				1-Way Transverse Brace Pattern (B19.0)					**2-Way Trans., Longit. Brace Pattern (B19.4)**				
3	10	323	1/2	44	122	R12AAEM306	N2	L2	132	367	R12AAEM406	N4	L4
4	10	482	5/8	51	193	R58AAEM306	N2	L2	154	580	R58AAEM406	N6	L6
				2-Way Transverse Brace Pattern (B19.2)					**4-Way Transverse, Longit. Brace Pattern (B19.6)**				
3	10	130	1/2	44	61	R12AAEM306	N1	L1	132	184	R12AAEM306	N2	L2
4	10	176	5/8	51	97	R58AAEM306	N1	L1	154	290	R58AAEM306	N3	L3
				TRANSVERSE, LONGITUDINAL BRACING REQUIREMENTS									
				4-Way Splayed Brace Pattern (B19.8)									
3	10	130	1/2	44	87	R12AAEM306	N1	L1					
4	10	176	5/8	51	137	R58AAEM306	N2	L2					

SINGLE HUNG RIGID METAL CONDUIT (RMC) [9] — MAXIMUM SEISMIC DESIGN FORCE = 0.25 G's

				1-Way Transverse Brace Pattern (B19.0)					**2-Way Trans., Longit. Brace Pattern (B19.4)**				
3	10	520	1/2	50	208	R12AAEM306	N3	L3	151	623	R12AAEM406	N7	L7
4	10	778	5/8	58	326	R58AAEM409	N4	L4	174	978	R58AAEM506	N10	L10
5	10	1,073	5/8	63	559	R58AAEM406	N6	L6	133	1,185	R58AAEM506	N12	L12
6	10	1,635	5/8	62	1,032	R58AAEM506	N11	L11	82	1,365	R58AAEM506	N14	L14
				2-Way Transverse Brace Pattern (B19.2)					**4-Way Transverse, Longit. Brace Pattern (B19.6)**				
3	10	192	1/2	50	104	R12AAEM306	N2	L2	151	311	R12AAEM409	N4	L4
4	10	262	5/8	58	163	R58AAEM306	N2	L2	174	489	R58AAEM406	N5	L5
5	10	418	5/8	63	279	R58AAEM306	N3	L3	133	593	R58AAEM406	N6	L6
6	10	779	5/8	62	516	R58AAEM406	N6	L6	82	683	R58AAEM509	N7	L7
				TRANSVERSE, LONGITUDINAL BRACING REQUIREMENTS									
				4-Way Splayed Brace Pattern (B19.8)									
3	10	192	1/2	50	147	R12AAEM306	N2	L2					
4	10	262	5/8	58	231	R58AAEM306	N3	L3					
5	10	418	5/8	63	395	R58AAEM406	N4	L4					
6	10	779	5/8	62	730	R58AAEM509	N8	L8					

1. TVL = DL + Fv + ($0.2S_{DS}$/1.4 x Wp). All Terms Are Working Loads.
2. Reductions In Actual Installed Brace Spacing Will Result In An Equal Percentage Reduction In Brace Reaction. As An Option When This Occurs ISAT May Substitute An Alternate Anchorage From Tables D1 or D2 Which Meets or Exceeds The Lowered Brace Reaction.
3. At Max. 30 Degree Brace Inclination.
4. Min. 3,000 psi NWC. Any "N Series" Connection May Be Utilized Having A Numeric Designation Equal To Or Higher Than That Shown.
5. Min. 3,000 psi NWC or LWC. Any "L Series" Connection May Be Utilized Having A Numeric Designation Equal To Or Higher Than That Shown.
6. As An Alternate, Brace Anchorage Connections To Structure May Be Employed Using Any Detail From Structural Connections Section "D" Series Details Where Assembly Design Value Meets Or Exceeds Brace Reaction.
7. For Trade Specific Bracing Installation Notes, Refer To Page 7.1
8. Utilize Any "G" Series Vertical Support Connection Having A Design Value Equal To Or Greater Than The Corresponding "Rod Total Vertical Load".
9. Based on Conductor Filled Conduit Weight. Refer to X-Series Weight Charts.

REGISTERED PROFESSIONAL ENGINEER MARCIN WASAZNIK S 6612 STRUCTURAL STATE OF CALIFORNIA

ISAT
A Division of Tomarco Contractor Specialties
International Seismic Application Technology
14848 Northam Street, La Mirada, CA 90638
877-999-4728 (Toll Free) 714-523-0845 (Fax)
www.isatsb.com

Rev. 1
03/12/19
Page
C31-0.25-30

REVIEWED FOR CODE COMPLIANCE BY HCAI OPM-0403 BY: William Staehlin DATE: 01-26-2024 CALIFORNIA BUILDING CODE 2022

RIGID BRACING REQUIREMENTS [7]

SINGLE HUNG EMT CONDUIT [9] — **MAXIMUM SEISMIC DESIGN FORCE = 0.25 G's**

Requires Use of ISAT Seismic Brackets. Use of Any Non-ISAT Bracket Voids Engineering. 2013 California Building Code Compliant

Maximum Pipe Diameter (in.)	Max. Vertical Support Spacing (ft.)	Rod [1] Total Vertical Load (lbs)	Min. [8] Vertical Support Rod Dia. (in.)	TRANSVERSE BRACING REQUIREMENTS: Max. [2] Brace Spacing (ft.)	Brace [3] Reaction P (lbs)	Min. Brace Assembly E - Pages	Min. Brace Anchorage [6]: Form Pour [4] Deck Page D1	Metal [5] Deck Page D2	LONGITUDINAL BRACING REQUIREMENTS: Max. [2] Brace Spacing (ft.)	Brace [3] Reaction P (lbs)	Min. Brace Assembly E - Pages	Min. Brace Anchorage [6]: Form Pour [4] Deck Page D1	Metal [5] Deck Page D2
				1-Way Transverse Brace Pattern (B19.0)					**2-Way Trans., Longit. Brace Pattern (B19.4)**				
3	10	529	1/2	44	165	R12AAEM306	N2	L2	132	494	R12AAEM406	N5	L5
4	10	807	5/8	51	260	R58AAEM306	N3	L3	154	781	R58AAEM509	N8	L8
				2-Way Transverse Brace Pattern (B19.2)					**4-Way Transverse, Longit. Brace Pattern (B19.6)**				
3	10	130	1/2	44	82	R12AAEM306	N1	L1	132	247	R12AAEM306	N3	L3
4	10	176	5/8	51	130	R58AAEM306	N2	L2	154	390	R58AAEM406	N4	L4
				TRANSVERSE, LONGITUDINAL BRACING REQUIREMENTS									
				4-Way Splayed Brace Pattern (B19.8)									
3	10	130	1/2	44	117	R12AAEM306	N2	L2					
4	10	176	5/8	51	184	R58AAEM306	N2	L2					

SINGLE HUNG RIGID METAL CONDUIT (RMC) [9] — **MAXIMUM SEISMIC DESIGN FORCE = 0.25 G's**

				1-Way Transverse Brace Pattern (B19.0)					**2-Way Trans., Longit. Brace Pattern (B19.4)**				
3	10	870	1/2	50	280	R12AAEM306	N3	L3	151	839	R12AAEM506	N9	L9
4	10	1,326	5/8	58	439	R58AAEM406	N5	L5	174	1,318	R58AAEM506	N14	L14
5	10	1,769	5/8	63	753	R58AAEM509	N8	L8	133	1,595	R58AAEM606	N16	L16
6	10	2,308	5/8	35	785	R58AAEM509	N8	L8	82	1,835	R58AAEM606	N19	L19
				2-Way Transverse Brace Pattern (B19.2)					**4-Way Transverse, Longit. Brace Pattern (B19.6)**				
3	10	192	1/2	50	140	R12AAEM306	N2	L2	151	419	R12AAEM406	N5	L5
4	10	262	5/8	58	220	R58AAEM306	N3	L3	174	659	R58AAEM406	N7	L7
5	10	418	5/8	63	376	R58AAEM406	N4	L4	133	798	R58AAEM506	N8	L8
6	10	779	5/8	62	695	R58AAEM509	N7	L7	82	918	R58AAEM506	N10	L10
				TRANSVERSE, LONGITUDINAL BRACING REQUIREMENTS									
				4-Way Splayed Brace Pattern (B19.8)									
3	10	192	1/2	50	198	R12AAEM306	N2	L2					
4	10	262	5/8	58	311	R58AAEM409	N4	L4					
5	10	418	5/8	63	532	R58AAEM406	N6	L6					
6	10	779	5/8	62	983	R58AAEM506	N10	L10					

1. TVL = DL + Fv + ($0.2S_{DS}$/1.4 x Wp). All Terms Are Working Loads.
2. Reductions In Actual Installed Brace Spacing Will Result In An Equal Percentage Reduction In Brace Reaction. As An Option When This Occurs ISAT May Substitute An Alternate Anchorage From Tables D1 or D2 Which Meets or Exceeds The Lowered Brace Reaction.
3. At Max. 50 Degree Brace Inclination.
4. Min. 3,000 psi NWC. Any "N Series" Connection May Be Utilized Having A Numeric Designation Equal To Or Higher Than That Shown.
5. Min. 3,000 psi NWC or LWC. Any "L Series" Connection May Be Utilized Having A Numeric Designation Equal To Or Higher Than That Shown.
6. As An Alternate, Brace Anchorage Connections To Structure May Be Employed Using Any Detail From Structural Connections Section "D" Series Details Where Assembly Design Value Meets Or Exceeds Brace Reaction.
7. For Trade Specific Bracing Installation Notes, Refer To Page 7.1
8. Utilize Any "G" Series Vertical Support Connection Having A Design Value Equal To Or Greater Than The Corresponding "Rod Total Vertical Load".
9. Based on Conductor Filled Conduit Weight. Refer to X-Series Weight Charts.

REGISTERED PROFESSIONAL ENGINEER MARCIN WASAZNIK S-6612 STRUCTURAL STATE OF CALIFORNIA

ISAT
A Division of Tomarco Contractor Specialties
International Seismic Application Technology
14848 Northam Street, La Mirada, CA 90638
877-999-4728 (Toll Free) 714-523-0845 (Fax)
www.isatsb.com

Rev. 1
03/12/19
Page
C31-0.25-45

REVIEWED FOR CODE COMPLIANCE BY HCAI OPM-0403 BY: William Staehlin DATE: 01-26-2024 CALIFORNIA BUILDING CODE 2022

RIGID BRACING REQUIREMENTS [7]

SINGLE HUNG EMT CONDUIT [9] — MAXIMUM SEISMIC DESIGN FORCE = 0.25 G's

Requires Use of ISAT Seismic Brackets. Use of Any Non-ISAT Bracket Voids Engineering. 2013 California Building Code Compliant

Maximum Pipe Diameter (in.)	Max. Vertical Support Spacing (ft.)	Rod [1] Total Vertical Load (lbs)	Min. [8] Vertical Support Rod Dia. (in.)	TRANSVERSE BRACING REQUIREMENTS: Max. [2] Brace Spacing (ft.)	Brace [3] Reaction P (lbs)	Min. Brace Assembly E - Pages	Min. Brace Anchorage [6]: Form Pour [4] Deck Page D1	Metal [5] Deck Page D2	LONGITUDINAL BRACING REQUIREMENTS: Max. [2] Brace Spacing (ft.)	Brace [3] Reaction P (lbs)	Min. Brace Assembly E - Pages	Min. Brace Anchorage [6]: Form Pour [4] Deck Page D1	Metal [5] Deck Page D2
				1-Way Transverse Brace Pattern (B19.0)					**2-Way Trans., Longit. Brace Pattern (B19.4)**				
3	10	710	1/2	44	212	R12AAEM306	N3	L3	132	636	R12AAEM406	N7	L7
4	10	1,093	5/8	51	335	R58AAEM406	N4	L4	154	1,004	R58AAEM506	N11	L11
				2-Way Transverse Brace Pattern (B19.2)					**4-Way Transverse, Longit. Brace Pattern (B19.6)**				
3	10	130	1/2	44	106	R12AAEM306	N2	L2	132	318	R12AAEM409	N4	L4
4	10	176	5/8	51	167	R58AAEM306	N2	L2	154	502	R58AAEM406	N6	L6
				TRANSVERSE, LONGITUDINAL BRACING REQUIREMENTS									
				4-Way Splayed Brace Pattern (B19.8)									
3	10	130	1/2	44	150	R12AAEM306	N2	L2					
4	10	176	5/8	51	237	R58AAEM306	N3	L3					

SINGLE HUNG RIGID METAL CONDUIT (RMC) [9] — MAXIMUM SEISMIC DESIGN FORCE = 0.25 G's

				1-Way Transverse Brace Pattern (B19.0)					**2-Way Trans., Longit. Brace Pattern (B19.4)**				
3	10	1,177	1/2	50	359	R12AAEM406	N4	L4	151	1,078	R12AAEM506	N11	L11
4	10	1,356	5/8	58	565	R58AAEM406	N6	L6	116	1,129	R58AAEM506	N12	L12
5	10	1,856	5/8	48	743	R58AAEM509	N8	L8	96	1,486	R58AAEM606	N15	L15
6	10	2,287	5/8	27	779	R58AAEM509	N8	L8	54	1,558	R58AAEM606	N16	L16
				2-Way Transverse Brace Pattern (B19.2)					**4-Way Transverse, Longit. Brace Pattern (B19.6)**				
3	10	192	1/2	50	180	R12AAEM306	N2	L2	151	539	R12AAEM406	N6	L6
4	10	262	5/8	58	282	R58AAEM306	N3	L3	174	847	R58AAEM506	N9	L9
5	10	418	5/8	63	484	R58AAEM406	N5	L5	117	903	R58AAEM506	N10	L10
6	10	779	5/8	62	894	R58AAEM506	N9	L9	72	1,040	R58AAEM506	N11	L11
				TRANSVERSE, LONGITUDINAL BRACING REQUIREMENTS									
				4-Way Splayed Brace Pattern (B19.8)									
3	10	192	1/2	50	254	R12AAEM306	N3	L3					
4	10	262	5/8	58	399	R58AAEM406	N4	L4					
5	10	418	5/8	63	684	R58AAEM509	N7	L7					
6	10	779	5/8	62	1,264	R58AAEM506	N13	L13					

1. TVL = DL + Fv + ($0.2S_{DS}$/1.4 x Wp). All Terms Are Working Loads.
2. Reductions In Actual Installed Brace Spacing Will Result In An Equal Percentage Reduction In Brace Reaction. As An Option When This Occurs ISAT May Substitute An Alternate Anchorage From Tables D1 or D2 Which Meets or Exceeds The Lowered Brace Reaction.
3. At Max. 60 Degree Brace Inclination.
4. Min. 3,000 psi NWC. Any "N Series" Connection May Be Utilized Having A Numeric Designation Equal To Or Higher Than That Shown.
5. Min. 3,000 psi NWC or LWC. Any "L Series" Connection May Be Utilized Having A Numeric Designation Equal To Or Higher Than That Shown.
6. As An Alternate, Brace Anchorage Connections To Structure May Be Employed Using Any Detail From Structural Connections Section "D" Series Details Where Assembly Design Value Meets Or Exceeds Brace Reaction.
7. For Trade Specific Bracing Installation Notes, Refer To Page 7.1
8. Utilize Any "G" Series Vertical Support Connection Having A Design Value Equal To Or Greater Than The Corresponding "Rod Total Vertical Load".
9. Based on Conductor Filled Conduit Weight. Refer to X-Series Weight Charts.

REVIEWED FOR CODE COMPLIANCE BY HCAi
OPM-0403
BY: William Staehlin
DATE: 01-26-2024
CALIFORNIA BUILDING CODE 2022

REGISTERED PROFESSIONAL ENGINEER MARCIN WASAZNIK S-6612 STRUCTURAL STATE OF CALIFORNIA

ISAT
A Division of Tomarco Contractor Specialties
International Seismic Application Technology
14848 Northam Street, La Mirada, CA 90638
877-999-4728 (Toll Free) 714-523-0845 (Fax)
www.isatsb.com

Rev. 1
03/12/19
Page
C31-0.25-60

RIGID BRACING REQUIREMENTS [7]

SINGLE HUNG EMT CONDUIT [9] — MAXIMUM SEISMIC DESIGN FORCE = 0.50 G's

Requires Use of ISAT Seismic Brackets. Use of Any Non-ISAT Bracket Voids Engineering. 2013 California Building Code Compliant

Maximum Pipe Diameter (in.)	Max. Vertical Support Spacing (ft.)	Rod [1] Total Vertical Load (lbs)	Min. [8] Vertical Support Rod Dia. (in.)	TRANSVERSE BRACING REQUIREMENTS: Max. [2] Brace Spacing (ft.)	Brace [3] Reaction P (lbs)	Min. Brace Assembly E - Pages	Min. Brace Anchorage [6]: Form Pour [4] Deck Page D1	Metal [5] Deck Page D2	LONGITUDINAL BRACING REQUIREMENTS: Max. [2] Brace Spacing (ft.)	Brace [3] Reaction P (lbs)	Min. Brace Assembly E - Pages	Min. Brace Anchorage [6]: Form Pour [4] Deck Page D1	Metal [5] Deck Page D2
				1-Way Transverse Brace Pattern (B19.0)					**2-Way Trans., Longit. Brace Pattern (B19.4)**				
3	10	455	1/2	37	206	R12AAEM306	N3	L3	111	617	R12AAEM406	N7	L7
4	10	681	5/8	43	325	R58AAEM409	N4	L4	127	955	R58AAEM506	N10	L10
				2-Way Transverse Brace Pattern (B19.2)					**4-Way Transverse, Longit. Brace Pattern (B19.6)**				
3	10	130	1/2	37	103	R12AAEM306	N2	L2	111	309	R12AAEM409	N4	L4
4	10	176	5/8	43	162	R58AAEM306	N2	L2	127	478	R58AAEM406	N5	L5
				TRANSVERSE, LONGITUDINAL BRACING REQUIREMENTS									
				4-Way Splayed Brace Pattern (B19.8)									
3	10	130	1/2	37	145	R12AAEM306	N2	L2					
4	10	176	5/8	43	230	R58AAEM306	N3	L3					

SINGLE HUNG RIGID METAL CONDUIT (RMC) [9] — MAXIMUM SEISMIC DESIGN FORCE = 0.50 G's

				1-Way Transverse Brace Pattern (B19.0)					**2-Way Trans., Longit. Brace Pattern (B19.4)**				
3	10	744	1/2	42	349	R12AAEM406	N4	L4	127	1,047	R12AAEM506	N11	L11
4	10	947	5/8	49	548	R58AAEM406	N6	L6	112	1,255	R58AAEM506	N13	L13
5	10	1,174	5/8	53	940	R58AAEM506	N10	L10	66	1,185	R58AAEM506	N12	L12
6	10	1,693	5/8	36	1,215	R58AAEM506	N13	L13	41	1,365	R58AAEM506	N14	L14
				2-Way Transverse Brace Pattern (B19.2)					**4-Way Transverse, Longit. Brace Pattern (B19.6)**				
3	10	192	1/2	42	175	R12AAEM306	N2	L2	127	524	R12AAEM406	N6	L6
4	10	262	5/8	49	274	R58AAEM306	N3	L3	112	628	R58AAEM406	N7	L7
5	10	418	5/8	53	470	R58AAEM406	N5	L5	66	593	R58AAEM406	N6	L6
6	10	779	5/8	36	608	R58AAEM406	N7	L7	41	683	R58AAEM509	N7	L7
				TRANSVERSE, LONGITUDINAL BRACING REQUIREMENTS									
				4-Way Splayed Brace Pattern (B19.8)									
3	10	192	1/2	42	247	R12AAEM306	N3	L3					
4	10	262	5/8	49	388	R58AAEM406	N4	L4					
5	10	418	5/8	53	665	R58AAEM509	N7	L7					
6	10	779	5/8	36	859	R58AAEM506	N9	L9					

1. TVL = DL + Fv + ($0.2S_{DS}$/1.4 x Wp). All Terms Are Working Loads.
2. Reductions In Actual Installed Brace Spacing Will Result In An Equal Percentage Reduction In Brace Reaction. As An Option When This Occurs ISAT May Substitute An Alternate Anchorage From Tables D1 or D2 Which Meets or Exceeds The Lowered Brace Reaction.
3. At Max. 30 Degree Brace Inclination.
4. Min. 3,000 psi NWC. Any "N Series" Connection May Be Utilized Having A Numeric Designation Equal To Or Higher Than That Shown.
5. Min. 3,000 psi NWC or LWC. Any "L Series" Connection May Be Utilized Having A Numeric Designation Equal To Or Higher Than That Shown.
6. As An Alternate, Brace Anchorage Connections To Structure May Be Employed Using Any Detail From Structural Connections Section "D" Series Details Where Assembly Design Value Meets Or Exceeds Brace Reaction.
7. For Trade Specific Bracing Installation Notes, Refer To Page 7.1
8. Utilize Any "G" Series Vertical Support Connection Having A Design Value Equal To Or Greater Than The Corresponding "Rod Total Vertical Load".
9. Based on Conductor Filled Conduit Weight. Refer to X-Series Weight Charts.

REGISTERED PROFESSIONAL ENGINEER MARCIN WASAZNIK S-6612 STRUCTURAL STATE OF CALIFORNIA

ISAT
A Division of Tomarco Contractor Specialties
International Seismic Application Technology
14848 Northam Street, La Mirada, CA 90638
877-999-4728 (Toll Free) 714-523-0845 (Fax)
www.isatsb.com

Rev. 1
03/12/19
Page
C31-0.5-30

REVIEWED FOR CODE COMPLIANCE BY HCAI OPM-0403 BY: William Staehlin DATE: 01-26-2024 CALIFORNIA BUILDING CODE 2022

RIGID BRACING REQUIREMENTS [7]

SINGLE HUNG EMT CONDUIT [9] — MAXIMUM SEISMIC DESIGN FORCE = 0.50 G's

Requires Use of ISAT Seismic Brackets. Use of Any Non-ISAT Bracket Voids Engineering. 2013 California Building Code Compliant

Maximum Pipe Diameter (in.)	Max. Vertical Support Spacing (ft.)	Rod [1] Total Vertical Load (lbs)	Min. [8] Vertical Support Rod Dia. (in.)	TRANSVERSE BRACING REQUIREMENTS: Max. [2] Brace Spacing (ft.)	Brace [3] Reaction P (lbs)	Min. Brace Assembly E - Pages	Min. Brace Anchorage [6]: Form Pour [4] Deck Page D1	Metal [5] Deck Page D2	LONGITUDINAL BRACING REQUIREMENTS: Max. [2] Brace Spacing (ft.)	Brace [3] Reaction P (lbs)	Min. Brace Assembly E - Pages	Min. Brace Anchorage [6]: Form Pour [4] Deck Page D1	Metal [5] Deck Page D2
				1-Way Transverse Brace Pattern (B19.0)					**2-Way Trans., Longit. Brace Pattern (B19.4)**				
3	10	801	1/2	37	277	R12AAEM306	N3	L3	111	832	R12AAEM506	N9	L9
4	10	1,161	5/8	40	407	R58AAEM406	N5	L5	120	1,220	R58AAEM506	N13	L13
				2-Way Transverse Brace Pattern (B19.2)					**4-Way Transverse, Longit. Brace Pattern (B19.6)**				
3	10	130	1/2	37	139	R12AAEM306	N2	L2	111	416	R12AAEM406	N5	L5
4	10	176	5/8	43	219	R58AAEM306	N3	L3	126	643	R58AAEM406	N7	L7
				TRANSVERSE, LONGITUDINAL BRACING REQUIREMENTS									
				4-Way Splayed Brace Pattern (B19.8)									
3	10	130	1/2	37	196	R12AAEM306	N2	L2					
4	10	176	5/8	40	288	R58AAEM306	N3	L3					

SINGLE HUNG RIGID METAL CONDUIT (RMC) [9] — MAXIMUM SEISMIC DESIGN FORCE = 0.50 G's

				1-Way Transverse Brace Pattern (B19.0)					**2-Way Trans., Longit. Brace Pattern (B19.4)**				
3	10	998	1/2	42	470	R12AAEM406	N5	L5	85	941	R12AAEM506	N10	L10
4	10	1,675	5/8	49	739	R58AAEM509	N8	L8	112	1,690	R58AAEM606	N17	L17
5	10	1,874	5/8	43	1,035	R58AAEM506	N11	L11	66	1,595	R58AAEM606	N16	L16
6	10	2,240	5/8	19	853	R58AAEM506	N9	L9	38	1,706	R58AAEM606	N18	L18
				2-Way Transverse Brace Pattern (B19.2)					**4-Way Transverse, Longit. Brace Pattern (B19.6)**				
3	10	192	1/2	40	222	R12AAEM306	N3	L3	120	665	R12AAEM509	N7	L7
4	10	262	5/8	40	302	R58AAEM409	N4	L4	112	845	R58AAEM506	N9	L9
5	10	418	5/8	40	481	R58AAEM406	N5	L5	66	798	R58AAEM506	N8	L8
6	10	779	5/8	36	818	R58AAEM506	N9	L9	41	918	R58AAEM506	N10	L10
				TRANSVERSE, LONGITUDINAL BRACING REQUIREMENTS									
				4-Way Splayed Brace Pattern (B19.8)									
3	10	192	1/2	40	313	R12AAEM409	N4	L4					
4	10	262	5/8	40	428	R58AAEM406	N5	L5					
5	10	418	5/8	40	681	R58AAEM509	N7	L7					
6	10	779	5/8	36	1,156	R58AAEM506	N12	L12					

1. TVL = DL + Fv + ($0.2S_{DS}$/1.4 x Wp). All Terms Are Working Loads.
2. Reductions In Actual Installed Brace Spacing Will Result In An Equal Percentage Reduction In Brace Reaction. As An Option When This Occurs ISAT May Substitute An Alternate Anchorage From Tables D1 or D2 Which Meets or Exceeds The Lowered Brace Reaction.
3. At Max. 50 Degree Brace Inclination.
4. Min. 3,000 psi NWC. Any "N Series" Connection May Be Utilized Having A Numeric Designation Equal To Or Higher Than That Shown.
5. Min. 3,000 psi NWC or LWC. Any "L Series" Connection May Be Utilized Having A Numeric Designation Equal To Or Higher Than That Shown.
6. As An Alternate, Brace Anchorage Connections To Structure May Be Employed Using Any Detail From Structural Connections Section "D" Series Details Where Assembly Design Value Meets Or Exceeds Brace Reaction.
7. For Trade Specific Bracing Installation Notes, Refer To Page 7.1
8. Utilize Any "G" Series Vertical Support Connection Having A Design Value Equal To Or Greater Than The Corresponding "Rod Total Vertical Load".
9. Based on Conductor Filled Conduit Weight. Refer to X-Series Weight Charts.

REVIEWED FOR CODE COMPLIANCE BY HCAI OPM-0403 BY: William Staehlin DATE: 01-26-2024 CALIFORNIA BUILDING CODE 2022

REGISTERED PROFESSIONAL ENGINEER MARCIN WASAZNIK S-6612 STRUCTURAL STATE OF CALIFORNIA

ISAT
A Division of Tomarco Contractor Specialties
International Seismic Application Technology
14848 Northam Street, La Mirada, CA 90638
877-999-4728 (Toll Free) 714-523-0845 (Fax)
www.isatsb.com

Rev. 1
03/12/19
Page
C31-0.5-45

RIGID BRACING REQUIREMENTS [7]

SINGLE HUNG EMT CONDUIT [9] — MAXIMUM SEISMIC DESIGN FORCE = 0.50 G's

Requires Use of ISAT Seismic Brackets. Use of Any Non-ISAT Bracket Voids Engineering. 2013 California Building Code Compliant

Maximum Pipe Diameter (in.)	Max. Vertical Support Spacing (ft.)	Rod [1] Total Vertical Load (lbs)	Min. [8] Vertical Support Rod Dia. (in.)	TRANSVERSE BRACING REQUIREMENTS: Max. [2] Brace Spacing (ft.)	Brace [3] Reaction P (lbs)	Min. Brace Assembly E - Pages	Min. Brace Anchorage [6]: Form Pour [4] Deck Page D1	Metal [5] Deck Page D2	LONGITUDINAL BRACING REQUIREMENTS: Max. [2] Brace Spacing (ft.)	Brace [3] Reaction P (lbs)	Min. Brace Assembly E - Pages	Min. Brace Anchorage [6]: Form Pour [4] Deck Page D1	Metal [5] Deck Page D2
				1-Way Transverse Brace Pattern (B19.0)					**2-Way Trans., Longit. Brace Pattern (B19.4)**				
3	10	1,106	1/2	37	356	R12AAEM406	N4	L4	111	1,069	R12AAEM506	N11	L11
4	10	1,527	5/8	43	563	R58AAEM406	N6	L6	111	1,455	R58AAEM506	N15	L15
				2-Way Transverse Brace Pattern (B19.2)					**4-Way Transverse, Longit. Brace Pattern (B19.6)**				
3	10	130	1/2	37	178	R12AAEM306	N2	L2	111	535	R12AAEM406	N6	L6
4	10	176	5/8	43	281	R58AAEM306	N3	L3	111	728	R58AAEM509	N8	L8
				TRANSVERSE, LONGITUDINAL BRACING REQUIREMENTS									
				4-Way Splayed Brace Pattern (B19.8)									
3	10	130	1/2	37	252	R12AAEM306	N3	L3					
4	10	176	5/8	43	398	R58AAEM406	N4	L4					

SINGLE HUNG RIGID METAL CONDUIT (RMC) [9] — MAXIMUM SEISMIC DESIGN FORCE = 0.50 G's

				1-Way Transverse Brace Pattern (B19.0)					**2-Way Trans., Longit. Brace Pattern (B19.4)**				
3	10	1,213	1/2	37	527	R12AAEM406	N6	L6	74	1,054	R12AAEM506	N11	L11
4	10	1,693	5/8	38	739	R58AAEM509	N8	L8	76	1,477	R58AAEM606	N15	L15
5	10	1,856	5/8	24	743	R58AAEM509	N8	L8	48	1,486	R58AAEM606	N15	L15
6	10	2,232	5/8	13	750	R58AAEM509	N8	L8	26	1,500	R58AAEM606	N16	L16
				2-Way Transverse Brace Pattern (B19.2)					**4-Way Transverse, Longit. Brace Pattern (B19.6)**				
3	10	192	1/2	40	285	R12AAEM306	N3	L3	114	815	R12AAEM506	N9	L9
4	10	262	5/8	40	389	R58AAEM406	N4	L4	99	958	R58AAEM506	N10	L10
5	10	418	5/8	40	619	R58AAEM406	N7	L7	58	903	R58AAEM506	N10	L10
6	10	779	5/8	32	925	R58AAEM506	N10	L10	36	1,040	R58AAEM506	N11	L11
				TRANSVERSE, LONGITUDINAL BRACING REQUIREMENTS									
				4-Way Splayed Brace Pattern (B19.8)									
3	10	192	1/2	40	403	R12AAEM406	N5	L5					
4	10	262	5/8	40	550	R58AAEM406	N6	L6					
5	10	418	5/8	40	875	R58AAEM506	N9	L9					
6	10	779	5/8	32	1,308	R58AAEM506	N14	L14					

1. TVL = DL + Fv + ($0.2S_{DS}$/1.4 x Wp). All Terms Are Working Loads.
2. Reductions In Actual Installed Brace Spacing Will Result In An Equal Percentage Reduction In Brace Reaction. As An Option When This Occurs ISAT May Substitute An Alternate Anchorage From Tables D1 or D2 Which Meets or Exceeds The Lowered Brace Reaction.
3. At Max. 60 Degree Brace Inclination.
4. Min. 3,000 psi NWC. Any "N Series" Connection May Be Utilized Having A Numeric Designation Equal To Or Higher Than That Shown.
5. Min. 3,000 psi NWC or LWC. Any "L Series" Connection May Be Utilized Having A Numeric Designation Equal To Or Higher Than That Shown.
6. As An Alternate, Brace Anchorage Connections To Structure May Be Employed Using Any Detail From Structural Connections Section "D" Series Details Where Assembly Design Value Meets Or Exceeds Brace Reaction.
7. For Trade Specific Bracing Installation Notes, Refer To Page 7.1
8. Utilize Any "G" Series Vertical Support Connection Having A Design Value Equal To Or Greater Than The Corresponding "Rod Total Vertical Load".
9. Based on Conductor Filled Conduit Weight. Refer to X-Series Weight Charts.

REGISTERED PROFESSIONAL ENGINEER MARCIN WASAZNIK S-6612 STRUCTURAL STATE OF CALIFORNIA

ISAT
A Division of Tomarco Contractor Specialties
International Seismic Application Technology
14848 Northam Street, La Mirada, CA 90638
877-999-4728 (Toll Free) 714-523-0845 (Fax)
www.isatsb.com

Rev. 1
03/12/19
Page
C31-0.5-60

REVIEWED FOR CODE COMPLIANCE BY HCAI OPM-0403 BY: William Staehlin DATE: 01-26-2024 CALIFORNIA BUILDING CODE 2022

RIGID BRACING REQUIREMENTS [7]

SINGLE HUNG EMT CONDUIT [9] — MAXIMUM SEISMIC DESIGN FORCE = 0.75 G's

Requires Use of ISAT Seismic Brackets. Use of Any Non-ISAT Bracket Voids Engineering. *2013 California Building Code Compliant*

Maximum Pipe Diameter (in.)	Max. Vertical Support Spacing (ft.)	Rod [1] Total Vertical Load (lbs)	Min. [8] Vertical Support Rod Dia. (in.)	TRANSVERSE BRACING REQUIREMENTS: Max. [2] Brace Spacing (ft.)	Brace [3] Reaction P (lbs)	Min. Brace Assembly E - Pages	Min. Brace Anchorage [6]: Form Pour [4] Deck Page D1	Metal [5] Deck Page D2	LONGITUDINAL BRACING REQUIREMENTS: Max. [2] Brace Spacing (ft.)	Brace [3] Reaction P (lbs)	Min. Brace Assembly E - Pages	Min. Brace Anchorage [6]: Form Pour [4] Deck Page D1	Metal [5] Deck Page D2
				1-Way Transverse Brace Pattern (B19.0)					**2-Way Trans., Longit. Brace Pattern (B19.4)**				
3	10	571	1/2	34	279	R12AAEM306	N3	L3	101	837	R12AAEM506	N9	L9
3	10	571	1/2	34	279	R12AAEM306	N3	L3	101	837	R12AAEM506	N9	L9
4	10	702	5/8	39	440	R58AAEM406	N5	L5	84	955	R58AAEM506	N10	L10
				2-Way Transverse Brace Pattern (B19.2)					**4-Way Transverse, Longit. Brace Pattern (B19.6)**				
3	10	130	1/2	34	139	R12AAEM306	N2	L2	101	418	R12AAEM406	N5	L5
3	10	130	1/2	34	139	R12AAEM306	N2	L2	101	418	R12AAEM406	N5	L5
4	10	176	5/8	39	220	R58AAEM306	N3	L3	84	478	R58AAEM406	N5	L5
				TRANSVERSE, LONGITUDINAL BRACING REQUIREMENTS									
				4-Way Splayed Brace Pattern (B19.8)									
3	10	130	1/2	34	197	R12AAEM306	N2	L2					
3	10	130	1/2	34	197	R12AAEM306	N2	L2					
4	10	176	5/8	39	311	R58AAEM409	N4	L4					

SINGLE HUNG RIGID METAL CONDUIT (RMC) [9] — MAXIMUM SEISMIC DESIGN FORCE = 0.75 G's

				1-Way Transverse Brace Pattern (B19.0)					**2-Way Trans., Longit. Brace Pattern (B19.4)**				
3	10	777	1/2	38	473	R12AAEM406	N5	L5	87	1,070	R12AAEM506	N11	L11
4	10	992	5/8	44	743	R58AAEM509	N8	L8	75	1,255	R58AAEM506	N13	L13
5	10	1,205	5/8	39	1,035	R58AAEM506	N11	L11	44	1,185	R58AAEM506	N12	L12
6	10	1,693	5/8	24	1,215	R58AAEM506	N13	L13	27	1,365	R58AAEM506	N14	L14
				2-Way Transverse Brace Pattern (B19.2)					**4-Way Transverse, Longit. Brace Pattern (B19.6)**				
3	10	192	1/2	38	237	R12AAEM306	N3	L3	87	535	R12AAEM406	N6	L6
4	10	262	5/8	44	372	R58AAEM406	N4	L4	75	628	R58AAEM406	N7	L7
5	10	418	5/8	39	518	R58AAEM406	N6	L6	44	593	R58AAEM406	N6	L6
6	10	779	5/8	24	608	R58AAEM406	N7	L7	27	683	R58AAEM509	N7	L7
				TRANSVERSE, LONGITUDINAL BRACING REQUIREMENTS									
				4-Way Splayed Brace Pattern (B19.8)									
3	10	192	1/2	38	335	R12AAEM406	N4	L4					
4	10	262	5/8	44	526	R58AAEM406	N6	L6					
5	10	418	5/8	39	732	R58AAEM509	N8	L8					
6	10	779	5/8	24	859	R58AAEM506	N9	L9					

1. TVL = DL + Fv + ($0.2S_{DS}$/1.4 x Wp). All Terms Are Working Loads.
2. Reductions In Actual Installed Brace Spacing Will Result In An Equal Percentage Reduction In Brace Reaction. As An Option When This Occurs ISAT May Substitute An Alternate Anchorage From Tables D1 or D2 Which Meets or Exceeds The Lowered Brace Reaction.
3. At Max. 30 Degree Brace Inclination.
4. Min. 3,000 psi NWC. Any "N Series" Connection May Be Utilized Having A Numeric Designation Equal To Or Higher Than That Shown.
5. Min. 3,000 psi NWC or LWC. Any "L Series" Connection May Be Utilized Having A Numeric Designation Equal To Or Higher Than That Shown.
6. As An Alternate, Brace Anchorage Connections To Structure May Be Employed Using Any Detail From Structural Connections Section "D" Series Details Where Assembly Design Value Meets Or Exceeds Brace Reaction.
7. For Trade Specific Bracing Installation Notes, Refer To Page 7.1
8. Utilize Any "G" Series Vertical Support Connection Having A Design Value Equal To Or Greater Than The Corresponding "Rod Total Vertical Load".
9. Based on Conductor Filled Conduit Weight. Refer to X-Series Weight Charts.

REGISTERED PROFESSIONAL ENGINEER MARCIN WASAZNIK S-6612 STRUCTURAL STATE OF CALIFORNIA

ISAT
A Division of Tomarco Contractor Specialties
International Seismic Application Technology
14848 Northam Street, La Mirada, CA 90638
877-999-4728 (Toll Free) 714-523-0845 (Fax)
www.isatsb.com

Rev. 1
03/12/19
Page
C31-0.75-30

REVIEWED FOR CODE COMPLIANCE BY ISAI OPM-0403 BY William Staehlin DATE: 01-26-2024 CALIFORNIA BUILDING CODE, 2022

RIGID BRACING REQUIREMENTS [7]

SINGLE HUNG EMT CONDUIT [9] — MAXIMUM SEISMIC DESIGN FORCE = 0.75 G's

Requires Use of ISAT Seismic Brackets. Use of Any Non-ISAT Bracket Voids Engineering. 2013 California Building Code Compliant

Maximum Pipe Diameter (in.)	Max. Vertical Support Spacing (ft.)	Rod [1] Total Vertical Load (lbs)	Min. [8] Vertical Support Rod Dia. (in.)	TRANSVERSE BRACING REQUIREMENTS: Max. [2] Brace Spacing (ft.)	Brace [3] Reaction P (lbs)	Min. Brace Assembly E - Pages	Min. Brace Anchorage [6]: Form Pour [4] Deck Page D1	Metal [5] Deck Page D2	LONGITUDINAL BRACING REQUIREMENTS: Max. [2] Brace Spacing (ft.)	Brace [3] Reaction P (lbs)	Min. Brace Assembly E - Pages	Min. Brace Anchorage [6]: Form Pour [4] Deck Page D1	Metal [5] Deck Page D2
				1-Way Transverse Brace Pattern (B19.0)					**2-Way Trans., Longit. Brace Pattern (B19.4)**				
3	10	1,040	1/2	34	376	R12AAEM406	N4	L4	101	1,127	R12AAEM506	N12	L12
4	10	1,261	5/8	39	593	R58AAEM406	N6	L6	84	1,285	R58AAEM506	N13	L13
				2-Way Transverse Brace Pattern (B19.2)					**4-Way Transverse, Longit. Brace Pattern (B19.6)**				
3	10	130	1/2	34	188	R12AAEM306	N2	L2	101	564	R12AAEM406	N6	L6
4	10	176	5/8	39	297	R58AAEM306	N3	L3	84	643	R58AAEM406	N7	L7
				TRANSVERSE, LONGITUDINAL BRACING REQUIREMENTS									
				4-Way Splayed Brace Pattern (B19.8)									
3	10	130	1/2	34	266	R12AAEM306	N3	L3					
4	10	176	5/8	39	420	R58AAEM406	N5	L5					

SINGLE HUNG RIGID METAL CONDUIT (RMC) [9] — MAXIMUM SEISMIC DESIGN FORCE = 0.75 G's

				1-Way Transverse Brace Pattern (B19.0)					**2-Way Trans., Longit. Brace Pattern (B19.4)**				
3	10	1,188	1/2	35	582	R12AAEM406	N6	L6	70	1,163	R12AAEM506	N12	L12
4	10	1,661	5/8	36	816	R58AAEM506	N9	L9	72	1,633	R58AAEM606	N17	L17
5	10	1,879	5/8	29	1,047	R58AAEM506	N11	L11	44	1,595	R58AAEM606	N16	L16
6	10	2,278	5/8	13	875	R58AAEM506	N9	L9	26	1,750	R58AAEM606	N18	L18
				2-Way Transverse Brace Pattern (B19.2)					**4-Way Transverse, Longit. Brace Pattern (B19.6)**				
3	10	192	1/2	38	319	R12AAEM409	N4	L4	87	720	R12AAEM509	N8	L8
4	10	262	5/8	44	501	R58AAEM406	N6	L6	75	845	R58AAEM506	N9	L9
5	10	418	5/8	48	858	R58AAEM506	N9	L9	44	798	R58AAEM506	N8	L8
6	10	779	5/8	47	1,585	R58AAEM606	N16	L16	27	918	R58AAEM506	N10	L10
				TRANSVERSE, LONGITUDINAL BRACING REQUIREMENTS									
				4-Way Splayed Brace Pattern (B19.8)									
3	10	192	1/2	38	451	R12AAEM406	N5	L5					
4	10	262	5/8	44	708	R58AAEM509	N8	L8					
5	10	418	5/8	37	951	R58AAEM506	N10	L10					
6	10	779	5/8	24	1,156	R58AAEM506	N12	L12					

1. TVL = DL + Fv + ($0.2S_{DS}$/1.4 x Wp). All Terms Are Working Loads.
2. Reductions In Actual Installed Brace Spacing Will Result In An Equal Percentage Reduction In Brace Reaction. As An Option When This Occurs ISAT May Substitute An Alternate Anchorage From Tables D1 or D2 Which Meets or Exceeds The Lowered Brace Reaction.
3. At Max. 50 Degree Brace Inclination.
4. Min. 3,000 psi NWC. Any "N Series" Connection May Be Utilized Having A Numeric Designation Equal To Or Higher Than That Shown.
5. Min. 3,000 psi NWC or LWC. Any "L Series" Connection May Be Utilized Having A Numeric Designation Equal To Or Higher Than That Shown.
6. As An Alternate, Brace Anchorage Connections To Structure May Be Employed Using Any Detail From Structural Connections Section "D" Series Details Where Assembly Design Value Meets Or Exceeds Brace Reaction.
7. For Trade Specific Bracing Installation Notes, Refer To Page 7.1
8. Utilize Any "G" Series Vertical Support Connection Having A Design Value Equal To Or Greater Than The Corresponding "Rod Total Vertical Load".
9. Based on Conductor Filled Conduit Weight. Refer to X-Series Weight Charts.

REGISTERED PROFESSIONAL ENGINEER MARCIN WASAZNIK S-6612 STRUCTURAL STATE OF CALIFORNIA

ISAT
A Division of Tomarco Contractor Specialties

International Seismic Application Technology
14848 Northam Street, La Mirada, CA 90638
877-999-4728 (Toll Free) 714-523-0845 (Fax)
www.isatsb.com

Rev. 1
03/12/19
Page
C31-0.75-45

REVIEWED FOR CODE COMPLIANCE BY HCAi
OPM-0403
BY: William Staehlin
DATE: 01-26-2024
CALIFORNIA BUILDING CODE 2022

RIGID BRACING REQUIREMENTS [7]

SINGLE HUNG EMT CONDUIT [9] — **MAXIMUM SEISMIC DESIGN FORCE = 0.75 G's**

Requires Use of ISAT Seismic Brackets. Use of Any Non-ISAT Bracket Voids Engineering. 2013 California Building Code Compliant

Maximum Pipe Diameter (in.)	Max. Vertical Support Spacing (ft.)	Rod [1] Total Vertical Load (lbs)	Min. [8] Vertical Support Rod Dia. (in.)	TRANSVERSE BRACING REQUIREMENTS: Max. [2] Brace Spacing (ft.)	Brace [3] Reaction P (lbs)	Min. Brace Assembly E - Pages	Min. Brace Anchorage [6]: Form Pour [4] Deck Page D1	Metal [5] Deck Page D2	LONGITUDINAL BRACING REQUIREMENTS: Max. [2] Brace Spacing (ft.)	Brace [3] Reaction P (lbs)	Min. Brace Assembly E - Pages	Min. Brace Anchorage [6]: Form Pour [4] Deck Page D1	Metal [5] Deck Page D2
				1-Way Transverse Brace Pattern (B19.0)					**2-Way Trans., Longit. Brace Pattern (B19.4)**				
3	10	1,065	1/2	34	483	R12AAEM406	N5	L5	67	966	R12AAEM506	N10	L10
4	10	1,592	5/8	38	745	R58AAEM509	N8	L8	74	1,455	R58AAEM506	N15	L15
				2-Way Transverse Brace Pattern (B19.2)					**4-Way Transverse, Longit. Brace Pattern (B19.6)**				
3	10	130	1/2	34	242	R12AAEM306	N3	L3	96	693	R12AAEM509	N7	L7
4	10	176	5/8	39	381	R58AAEM406	N4	L4	74	728	R58AAEM509	N8	L8
				TRANSVERSE, LONGITUDINAL BRACING REQUIREMENTS									
				4-Way Splayed Brace Pattern (B19.8)									
3	10	130	1/2	34	342	R12AAEM406	N4	L4					
4	10	176	5/8	39	539	R58AAEM406	N6	L6					

SINGLE HUNG RIGID METAL CONDUIT (RMC) [9] — **MAXIMUM SEISMIC DESIGN FORCE = 0.75 G's**

				1-Way Transverse Brace Pattern (B19.0)					**2-Way Trans., Longit. Brace Pattern (B19.4)**				
3	10	1,185	1/2	24	513	R12AAEM406	N6	L6	48	1,025	R12AAEM506	N11	L11
4	10	1,674	5/8	25	729	R58AAEM509	N8	L8	50	1,458	R58AAEM506	N15	L15
5	10	1,856	5/8	16	743	R58AAEM509	N8	L8	32	1,486	R58AAEM606	N15	L15
6	10	2,287	5/8	9	779	R58AAEM509	N8	L8	18	1,558	R58AAEM606	N16	L16
				2-Way Transverse Brace Pattern (B19.2)					**4-Way Transverse, Longit. Brace Pattern (B19.6)**				
3	10	192	1/2	38	410	R12AAEM406	N5	L5	76	815	R12AAEM506	N9	L9
4	10	262	5/8	44	644	R58AAEM406	N7	L7	66	958	R58AAEM506	N10	L10
5	10	418	5/8	34	790	R58AAEM509	N8	L8	39	903	R58AAEM506	N10	L10
6	10	779	5/8	21	925	R58AAEM506	N10	L10	24	1,040	R58AAEM506	N11	L11
				TRANSVERSE, LONGITUDINAL BRACING REQUIREMENTS									
				4-Way Splayed Brace Pattern (B19.8)									
3	10	192	1/2	38	579	R12AAEM406	N6	L6					
4	10	262	5/8	44	910	R58AAEM506	N10	L10					
5	10	418	5/8	34	1,117	R58AAEM506	N12	L12					
6	10	779	5/8	21	1,308	R58AAEM506	N14	L14					

1. TVL = DL + Fv + ($0.2S_{DS}$/1.4 x Wp). All Terms Are Working Loads.
2. Reductions In Actual Installed Brace Spacing Will Result In An Equal Percentage Reduction In Brace Reaction. As An Option When This Occurs ISAT May Substitute An Alternate Anchorage From Tables D1 or D2 Which Meets or Exceeds The Lowered Brace Reaction.
3. At Max. 60 Degree Brace Inclination.
4. Min. 3,000 psi NWC. Any "N Series" Connection May Be Utilized Having A Numeric Designation Equal To Or Higher Than That Shown.
5. Min. 3,000 psi NWC or LWC. Any "L Series" Connection May Be Utilized Having A Numeric Designation Equal To Or Higher Than That Shown.
6. As An Alternate, Brace Anchorage Connections To Structure May Be Employed Using Any Detail From Structural Connections Section "D" Series Details Where Assembly Design Value Meets Or Exceeds Brace Reaction.
7. For Trade Specific Bracing Installation Notes, Refer To Page 7.1
8. Utilize Any "G" Series Vertical Support Connection Having A Design Value Equal To Or Greater Than The Corresponding "Rod Total Vertical Load".
9. Based on Conductor Filled Conduit Weight. Refer to X-Series Weight Charts.

REGISTERED PROFESSIONAL ENGINEER MARCIN WASAZNIK S-6612 STRUCTURAL STATE OF CALIFORNIA

ISAT
A Division of Tomarco Contractor Specialties

International Seismic Application Technology
14848 Northam Street, La Mirada, CA 90638
877-999-4728 (Toll Free) 714-523-0845 (Fax)
www.isatsb.com

Rev. 1
03/12/19
Page
C31-0.75-60

REVIEWED FOR CODE COMPLIANCE BY HCAI OPM-0403 BY: William Staehlin DATE: 01-26-2024 CALIFORNIA BUILDING CODE 2022

RIGID BRACING REQUIREMENTS [7]

SINGLE HUNG EMT CONDUIT [9] — MAXIMUM SEISMIC DESIGN FORCE = 1.00 G's

Requires Use of ISAT Seismic Brackets. Use of Any Non-ISAT Bracket Voids Engineering. 2013 California Building Code Compliant

Maximum Pipe Diameter (in.)	Max. Vertical Support Spacing (ft.)	Rod [1] Total Vertical Load (lbs)	Min. [8] Vertical Support Rod Dia. (in.)	TRANSVERSE BRACING REQUIREMENTS: Max. [2] Brace Spacing (ft.)	Brace [3] Reaction P (lbs)	Min. Brace Assembly E - Pages	Min. Brace Anchorage [6]: Form Pour [4] Deck Page D1	Metal [5] Deck Page D2	LONGITUDINAL BRACING REQUIREMENTS: Max. [2] Brace Spacing (ft.)	Brace [3] Reaction P (lbs)	Min. Brace Assembly E - Pages	Min. Brace Anchorage [6]: Form Pour [4] Deck Page D1	Metal [5] Deck Page D2
				1-Way Transverse Brace Pattern (B19.0)					**2-Way Trans., Longit. Brace Pattern (B19.4)**				
3	10	616	1/2	31	346	R12AAEM406	N4	L4	82	910	R12AAEM506	N10	L10
4	10	727	5/8	36	546	R58AAEM406	N6	L6	63	955	R58AAEM506	N10	L10
				2-Way Transverse Brace Pattern (B19.2)					**4-Way Transverse, Longit. Brace Pattern (B19.6)**				
3	10	130	1/2	31	173	R12AAEM306	N2	L2	82	455	R12AAEM406	N5	L5
4	10	176	5/8	36	273	R58AAEM306	N3	L3	63	478	R58AAEM406	N5	L5
				TRANSVERSE, LONGITUDINAL BRACING REQUIREMENTS									
				4-Way Splayed Brace Pattern (B19.8)									
3	10	130	1/2	31	245	R12AAEM306	N3	L3					
4	10	176	5/8	36	386	R58AAEM406	N4	L4					

SINGLE HUNG RIGID METAL CONDUIT (RMC) [9] — MAXIMUM SEISMIC DESIGN FORCE = 1.00 G's

				1-Way Transverse Brace Pattern (B19.0)					**2-Way Trans., Longit. Brace Pattern (B19.4)**				
3	10	802	1/2	36	587	R12AAEM406	N6	L6	65	1,070	R12AAEM506	N11	L11
4	10	1,023	5/8	38	860	R58AAEM506	N9	L9	56	1,255	R58AAEM506	N13	L13
5	10	1,205	5/8	29	1,035	R58AAEM506	N11	L11	33	1,185	R58AAEM506	N12	L12
6	10	1,693	5/8	18	1,215	R58AAEM506	N13	L13	20	1,365	R58AAEM506	N14	L14
				2-Way Transverse Brace Pattern (B19.2)					**4-Way Transverse, Longit. Brace Pattern (B19.6)**				
3	10	192	1/2	36	294	R12AAEM306	N3	L3	65	535	R12AAEM406	N6	L6
4	10	262	5/8	38	430	R58AAEM406	N5	L5	56	628	R58AAEM406	N7	L7
5	10	418	5/8	29	518	R58AAEM406	N6	L6	33	593	R58AAEM406	N6	L6
6	10	779	5/8	18	608	R58AAEM406	N7	L7	20	683	R58AAEM509	N7	L7
				TRANSVERSE, LONGITUDINAL BRACING REQUIREMENTS									
				4-Way Splayed Brace Pattern (B19.8)									
3	10	192	1/2	36	415	R12AAEM406	N5	L5					
4	10	262	5/8	38	608	R58AAEM406	N7	L7					
5	10	418	5/8	29	732	R58AAEM509	N8	L8					
6	10	779	5/8	18	859	R58AAEM506	N9	L9					

1. TVL = DL + Fv + ($0.2S_{DS}$/1.4 x Wp). All Terms Are Working Loads.
2. Reductions In Actual Installed Brace Spacing Will Result In An Equal Percentage Reduction In Brace Reaction. As An Option When This Occurs ISAT May Substitute An Alternate Anchorage From Tables D1 or D2 Which Meets or Exceeds The Lowered Brace Reaction.
3. At Max. 30 Degree Brace Inclination.
4. Min. 3,000 psi NWC. Any "N Series" Connection May Be Utilized Having A Numeric Designation Equal To Or Higher Than That Shown.
5. Min. 3,000 psi NWC or LWC. Any "L Series" Connection May Be Utilized Having A Numeric Designation Equal To Or Higher Than That Shown.
6. As An Alternate, Brace Anchorage Connections To Structure May Be Employed Using Any Detail From Structural Connections Section "D" Series Details Where Assembly Design Value Meets Or Exceeds Brace Reaction.
7. For Trade Specific Bracing Installation Notes, Refer To Page 7.1
8. Utilize Any "G" Series Vertical Support Connection Having A Design Value Equal To Or Greater Than The Corresponding "Rod Total Vertical Load".
9. Based on Conductor Filled Conduit Weight. Refer to X-Series Weight Charts.

REGISTERED PROFESSIONAL ENGINEER MARCIN WASAZNIK S 6612 STRUCTURAL STATE OF CALIFORNIA

ISAT
A Division of Tomarco Contractor Specialties

International Seismic Application Technology
14848 Northam Street, La Mirada, CA 90638
877-999-4728 (Toll Free) 714-523-0845 (Fax)
www.isatsb.com

Rev. 1
03/12/19
Page
C31-1-30

REVIEWED FOR CODE COMPLIANCE BY HCAI OPM-0403 BY: William Staehlin DATE: 01-26-2024 CALIFORNIA BUILDING CODE 2022

RIGID BRACING REQUIREMENTS [7]

SINGLE HUNG EMT CONDUIT [9] — MAXIMUM SEISMIC DESIGN FORCE = 1.00 G's

Requires Use of ISAT Seismic Brackets. Use of Any Non-ISAT Bracket Voids Engineering. 2013 California Building Code Compliant

Maximum Pipe Diameter (in.)	Max. Vertical Support Spacing (ft.)	Rod [1] Total Vertical Load (lbs)	Min. [8] Vertical Support Rod Dia. (in.)	TRANSVERSE BRACING REQUIREMENTS: Max. [2] Brace Spacing (ft.)	Brace [3] Reaction P (lbs)	Min. Brace Assembly E - Pages	Min. Brace Anchorage [6]: Form Pour [4] Deck Page D1	Metal [5] Deck Page D2	LONGITUDINAL BRACING REQUIREMENTS: Max. [2] Brace Spacing (ft.)	Brace [3] Reaction P (lbs)	Min. Brace Assembly E - Pages	Min. Brace Anchorage [6]: Form Pour [4] Deck Page D1	Metal [5] Deck Page D2
				1-Way Transverse Brace Pattern (B19.0)					**2-Way Trans., Longit. Brace Pattern (B19.4)**				
3	10	1,134	1/2	31	466	R12AAEM406	N5	L5	82	1,225	R12AAEM506	N13	L13
4	10	1,311	5/8	36	736	R58AAEM509	N8	L8	63	1,285	R58AAEM506	N13	L13
				2-Way Transverse Brace Pattern (B19.2)					**4-Way Transverse, Longit. Brace Pattern (B19.6)**				
3	10	130	1/2	31	233	R12AAEM306	N3	L3	82	613	R12AAEM406	N7	L7
4	10	176	5/8	36	368	R58AAEM406	N4	L4	63	643	R58AAEM406	N7	L7
				TRANSVERSE, LONGITUDINAL BRACING REQUIREMENTS									
				4-Way Splayed Brace Pattern (B19.8)									
3	10	130	1/2	31	330	R12AAEM409	N4	L4					
4	10	176	5/8	36	521	R58AAEM406	N6	L6					

SINGLE HUNG RIGID METAL CONDUIT (RMC) [9] — MAXIMUM SEISMIC DESIGN FORCE = 1.00 G's

				1-Way Transverse Brace Pattern (B19.0)					**2-Way Trans., Longit. Brace Pattern (B19.4)**				
3	10	1,179	1/2	26	576	R12AAEM406	N6	L6	52	1,152	R12AAEM506	N12	L12
4	10	1,661	5/8	27	816	R58AAEM506	N9	L9	54	1,633	R58AAEM606	N17	L17
5	10	1,865	5/8	21	1,011	R58AAEM506	N11	L11	33	1,595	R58AAEM606	N16	L16
6	10	2,163	5/8	9	808	R58AAEM506	N9	L9	18	1,616	R58AAEM606	N17	L17
				2-Way Transverse Brace Pattern (B19.2)					**4-Way Transverse, Longit. Brace Pattern (B19.6)**				
3	10	192	1/2	36	395	R12AAEM406	N4	L4	65	720	R12AAEM509	N8	L8
4	10	262	5/8	38	578	R58AAEM406	N6	L6	56	845	R58AAEM506	N9	L9
5	10	418	5/8	28	673	R58AAEM509	N7	L7	33	798	R58AAEM506	N8	L8
6	10	779	5/8	18	818	R58AAEM506	N9	L9	20	918	R58AAEM506	N10	L10
				TRANSVERSE, LONGITUDINAL BRACING REQUIREMENTS									
				4-Way Splayed Brace Pattern (B19.8)									
3	10	192	1/2	36	559	R12AAEM406	N6	L6					
4	10	262	5/8	38	817	R58AAEM506	N9	L9					
5	10	418	5/8	28	951	R58AAEM506	N10	L10					
6	10	779	5/8	18	1,156	R58AAEM506	N12	L12					

1. TVL = DL + Fv + ($0.2S_{DS}$/1.4 x Wp). All Terms Are Working Loads.
2. Reductions In Actual Installed Brace Spacing Will Result In An Equal Percentage Reduction In Brace Reaction. As An Option When This Occurs ISAT May Substitute An Alternate Anchorage From Tables D1 or D2 Which Meets or Exceeds The Lowered Brace Reaction.
3. At Max. 50 Degree Brace Inclination.
4. Min. 3,000 psi NWC. Any "N Series" Connection May Be Utilized Having A Numeric Designation Equal To Or Higher Than That Shown.
5. Min. 3,000 psi NWC or LWC. Any "L Series" Connection May Be Utilized Having A Numeric Designation Equal To Or Higher Than That Shown.
6. As An Alternate, Brace Anchorage Connections To Structure May Be Employed Using Any Detail From Structural Connections Section "D" Series Details Where Assembly Design Value Meets Or Exceeds Brace Reaction.
7. For Trade Specific Bracing Installation Notes, Refer To Page 7.1
8. Utilize Any "G" Series Vertical Support Connection Having A Design Value Equal To Or Greater Than The Corresponding "Rod Total Vertical Load".
9. Based on Conductor Filled Conduit Weight. Refer to X-Series Weight Charts.

REGISTERED PROFESSIONAL ENGINEER MARCIN WASAZNIK S-6612 STRUCTURAL STATE OF CALIFORNIA

ISAT
A Division of Tomarco Contractor Specialties

International Seismic Application Technology
14848 Northam Street, La Mirada, CA 90638
877-999-4728 (Toll Free) 714-523-0845 (Fax)
www.isatsb.com

Rev. 1
03/12/19

REVIEWED FOR CODE COMPLIANCE BY HCAI OPM-0403 BY: William Staehlin DATE: 01-26-2024 CALIFORNIA BUILDING CODE 2022

RIGID BRACING REQUIREMENTS [7]

SINGLE HUNG EMT CONDUIT [9] — MAXIMUM SEISMIC DESIGN FORCE = 1.00 G's

Requires Use of ISAT Seismic Brackets. Use of Any Non-ISAT Bracket Voids Engineering. 2013 California Building Code Compliant

Maximum Pipe Diameter (in.)	Max. Vertical Support Spacing (ft.)	Rod [1] Total Vertical Load (lbs)	Min. [8] Vertical Support Rod Dia. (in.)	TRANSVERSE BRACING REQUIREMENTS: Max. [2] Brace Spacing (ft.)	Brace [3] Reaction P (lbs)	Min. Brace Assembly E - Pages	Min. Brace Anchorage [6]: Form Pour [4] Deck Page D1	Metal [5] Deck Page D2	LONGITUDINAL BRACING REQUIREMENTS: Max. [2] Brace Spacing (ft.)	Brace [3] Reaction P (lbs)	Min. Brace Assembly E - Pages	Min. Brace Anchorage [6]: Form Pour [4] Deck Page D1	Metal [5] Deck Page D2
				1-Way Transverse Brace Pattern (B19.0)					**2-Way Trans., Longit. Brace Pattern (B19.4)**				
3	10	1,133	1/2	27	518	R12AAEM406	N6	L6	54	1,037	R12AAEM506	N11	L11
4	10	1,587	5/8	28	732	R58AAEM509	N8	L8	56	1,455	R58AAEM506	N15	L15
				2-Way Transverse Brace Pattern (B19.2)					**4-Way Transverse, Longit. Brace Pattern (B19.6)**				
3	10	130	1/2	31	300	R12AAEM306	N3	L3	72	693	R12AAEM509	N7	L7
4	10	176	5/8	36	473	R58AAEM406	N5	L5	56	728	R58AAEM509	N8	L8
				TRANSVERSE, LONGITUDINAL BRACING REQUIREMENTS									
				4-Way Splayed Brace Pattern (B19.8)									
3	10	130	1/2	31	424	R12AAEM406	N5	L5					
4	10	176	5/8	36	669	R58AAEM509	N7	L7					

SINGLE HUNG RIGID METAL CONDUIT (RMC) [9] — MAXIMUM SEISMIC DESIGN FORCE = 1.00 G's

				1-Way Transverse Brace Pattern (B19.0)					**2-Way Trans., Longit. Brace Pattern (B19.4)**				
3	10	1,185	1/2	18	513	R12AAEM406	N6	L6	36	1,025	R12AAEM506	N11	L11
4	10	1,693	5/8	19	739	R58AAEM509	N8	L8	38	1,477	R58AAEM606	N15	L15
5	10	1,856	5/8	12	743	R58AAEM509	N8	L8	24	1,486	R58AAEM606	N15	L15
6	10	2,120	5/8	6	692	R58AAEM509	N7	L7	12	1,385	R58AAEM506	N14	L14
				2-Way Transverse Brace Pattern (B19.2)					**4-Way Transverse, Longit. Brace Pattern (B19.6)**				
3	10	192	1/2	35	495	R12AAEM406	N5	L5	57	815	R12AAEM506	N9	L9
4	10	262	5/8	34	655	R58AAEM406	N7	L7	49	958	R58AAEM506	N10	L10
5	10	418	5/8	26	790	R58AAEM509	N8	L8	29	903	R58AAEM506	N10	L10
6	10	779	5/8	16	925	R58AAEM506	N10	L10	18	1,040	R58AAEM506	N11	L11
				TRANSVERSE, LONGITUDINAL BRACING REQUIREMENTS									
				4-Way Splayed Brace Pattern (B19.8)									
3	10	192	1/2	35	700	R12AAEM509	N8	L8					
4	10	262	5/8	34	926	R58AAEM506	N10	L10					
5	10	418	5/8	26	1,117	R58AAEM506	N12	L12					
6	10	779	5/8	16	1,308	R58AAEM506	N14	L14					

1. TVL = DL + Fv + ($0.2S_{DS}$/1.4 x Wp). All Terms Are Working Loads.
2. Reductions In Actual Installed Brace Spacing Will Result In An Equal Percentage Reduction In Brace Reaction. As An Option When This Occurs ISAT May Substitute An Alternate Anchorage From Tables D1 or D2 Which Meets or Exceeds The Lowered Brace Reaction.
3. At Max. 60 Degree Brace Inclination.
4. Min. 3,000 psi NWC. Any "N Series" Connection May Be Utilized Having A Numeric Designation Equal To Or Higher Than That Shown.
5. Min. 3,000 psi NWC or LWC. Any "L Series" Connection May Be Utilized Having A Numeric Designation Equal To Or Higher Than That Shown.
6. As An Alternate, Brace Anchorage Connections To Structure May Be Employed Using Any Detail From Structural Connections Section "D" Series Details Where Assembly Design Value Meets Or Exceeds Brace Reaction.
7. For Trade Specific Bracing Installation Notes, Refer To Page 7.1
8. Utilize Any "G" Series Vertical Support Connection Having A Design Value Equal To Or Greater Than The Corresponding "Rod Total Vertical Load".
9. Based on Conductor Filled Conduit Weight. Refer to X-Series Weight Charts.

REGISTERED PROFESSIONAL ENGINEER MARCIN WASAZNIK S-6612 STRUCTURAL STATE OF CALIFORNIA

ISAT
A Division of Tomarco Contractor Specialties

International Seismic Application Technology
14848 Northam Street, La Mirada, CA 90638
877-999-4728 (Toll Free) 714-523-0845 (Fax)
www.isatsb.com

Rev. 1
03/12/19
Page
C31-1-60

REVIEWED FOR CODE COMPLIANCE BY HCAI
OPM-0403
BY: William Staehlin
DATE: 01-26-2024
CALIFORNIA BUILDING CODE 2022

CABLE BRACING REQUIREMENTS [7]:

SINGLE HUNG EMT CONDUIT [9] — MAXIMUM SEISMIC DESIGN FORCE = 0.25 G's

Requires Use of ISAT Seismic Brackets. Use of Any Non-ISAT Bracket Voids Engineering. — *2013 California Building Code Compliant*

Maximum Pipe Diameter (in.)	Max. Vertical Support Spacing (ft.)	Rod [1] Total Vertical Load (lbs)	Min. [8] Vertical Support Rod Dia. (in.)	TRANSVERSE BRACING REQUIREMENTS: Max. [2] Brace Spacing (ft.)	Brace [3] Reaction P (lbs)	Min. Brace Assembly E - Pages	Min. Brace Anchorage [6] Form Pour [4] Deck Page D1	Min. Brace Anchorage [6] Metal [5] Deck Page D2	LONGITUDINAL BRACING REQUIREMENTS: Max. [2] Brace Spacing (ft.)	Brace [3] Reaction P (lbs)	Min. Brace Assembly E - Pages	Min. Brace Anchorage [6] Form Pour [4] Deck Page D1	Min. Brace Anchorage [6] Metal [5] Deck Page D2
				2-Way Transverse Brace Pattern (B19.20)					4-Way T/L Details (B19.22)				
3	10	130	1/2	44	122	C12AA04WS	N2	L2	132	367	C12AA04WS	N4	L4
4	10	176	5/8	51	193	C58AA04WS	N2	L2	154	580	C58AA04WS	N6	L6
				TRANSVERSE, LONGITUDINAL BRACING REQUIREMENTS (SELECT EITHER T/L OR SPLAY)									
				4-Way T/L Details (B19.22)					4-Way Splay Details (B19.23)				
3	10	130	1/2	44	122	C12AA04WS	N2	L2	44	122	C12AA04WS	N2	L2
4	10	176	5/8	51	193	C58AA04WS	N2	L2	51	193	C58AA04WS	N2	L2

SINGLE HUNG RIGID METAL CONDUIT (RMC) [9] — MAXIMUM SEISMIC DESIGN FORCE = 0.25 G's

Maximum Pipe Diameter (in.)	Max. Vertical Support Spacing (ft.)	Rod [1] Total Vertical Load (lbs)	Min. [8] Vertical Support Rod Dia. (in.)	TRANSVERSE BRACING REQUIREMENTS: Max. [2] Brace Spacing (ft.)	Brace [3] Reaction P (lbs)	Min. Brace Assembly E - Pages	Min. Brace Anchorage [6] Form Pour [4] Deck Page D1	Min. Brace Anchorage [6] Metal [5] Deck Page D2	LONGITUDINAL BRACING REQUIREMENTS: Max. [2] Brace Spacing (ft.)	Brace [3] Reaction P (lbs)	Min. Brace Assembly E - Pages	Min. Brace Anchorage [6] Form Pour [4] Deck Page D1	Min. Brace Anchorage [6] Metal [5] Deck Page D2
				2-Way Transverse Brace Pattern (B19.20)					4-Way T/L Details (B19.22)				
3	10	192	1/2	50	208	C12AA04WS	N3	L3	151	623	C12AA04WS	N7	L7
4	10	262	5/8	58	326	C58AA04WS	N4	L4	174	978	C58AA06WS	N10	L10
5	10	418	5/8	63	559	C58AA04WS	N6	L6	133	1,185	C58AA06WS	N12	L12
6	10	779	5/8	62	1,032	C58AA06WS	N11	L11	82	1,365	C58AA06WS	N14	L14
				TRANSVERSE, LONGITUDINAL BRACING REQUIREMENTS (SELECT EITHER T/L OR SPLAY)									
				4-Way T/L Details (B19.22)					4-Way Splay Details (B19.23)				
3	10	192	1/2	50	208	C12AA04WS	N3	L3	50	208	C12AA04WS	N3	L3
4	10	262	5/8	58	326	C58AA04WS	N4	L4	58	326	C58AA04WS	N4	L4
5	10	418	5/8	63	559	C58AA04WS	N6	L6	63	559	C58AA04WS	N6	L6
6	10	779	5/8	62	1,032	C58AA06WS	N11	L11	62	1,032	C58AA06WS	N11	L11

1. TVL = DL + Fv + ($0.2S_{DS}$/1.4 x Wp). All Terms Are Working Loads.
2. Reductions In Actual Installed Brace Spacing Will Result In An Equal Percentage Reduction In Brace Reaction. As An Option When This Occurs ISAT May Substitute An Alternate Anchorage From Tables D1 or D2 Which Meets or Exceeds The Lowered Brace Reaction.
3. At Max. 30 Degree Brace Inclination.
4. Min. 3,000 psi NWC. Any "N Series" Connection May Be Utilized Having A Numeric Designation Equal To Or Higher Than That Shown.
5. Min. 3,000 psi NWC or LWC. Any "L Series" Connection May Be Utilized Having A Numeric Designation Equal To Or Higher Than That Shown.
6. As An Alternate, Brace Anchorage Connections To Structure May Be Employed Using Any Detail From Structural Connections Section "D" Series Details Where Assembly Design Value Meets Or Exceeds Brace Reaction.
7. For Trade Specific Bracing Installation Notes, Refer To Page7.1
8. Utilize Any "G" Series Vertical Support Connection Having A Design Value Equal To Or Greater Than The Corresponding "Rod Total Vertical Load".
9. Based on Conductor Filled Conduit Weight. Refer to X-Series Weight Charts.

REGISTERED PROFESSIONAL ENGINEER MARCIN WASAZNIK S-6612 STRUCTURAL STATE OF CALIFORNIA

ISAT
A Division of Tomarco Contractor Specialties

International Seismic Application Technology
14848 Northam Street, La Mirada, CA 90638
877-999-4728 (Toll Free) 714-523-0845 (Fax)
www.isatsb.com

Rev. 1
03/12/19
Page
C32-0.25-30

REVIEWED FOR CODE COMPLIANCE BY ISAT
OPM-0403
BY: William Staehlin
DATE: 01-26-2024
CALIFORNIA BUILDING CODE 2022

CABLE BRACING REQUIREMENTS [7]:

SINGLE HUNG EMT CONDUIT [9] — MAXIMUM SEISMIC DESIGN FORCE = 0.25 G's

Requires Use of ISAT Seismic Brackets. Use of Any Non-ISAT Bracket Voids Engineering. — *2013 California Building Code Compliant*

Maximum Pipe Diameter (in.)	Max. Vertical Support Spacing (ft.)	Rod [1] Total Vertical Load (lbs)	Min. [8] Vertical Support Rod Dia. (in.)	TRANSVERSE BRACING REQUIREMENTS: Max. [2] Brace Spacing (ft.)	Brace [3] Reaction P (lbs)	Min. Brace Assembly E - Pages	Min. Brace Anchorage [6] Form Pour [4] Deck Page D1	Min. Brace Anchorage [6] Metal [5] Deck Page D2	LONGITUDINAL BRACING REQUIREMENTS: Max. [2] Brace Spacing (ft.)	Brace [3] Reaction P (lbs)	Min. Brace Assembly E - Pages	Min. Brace Anchorage [6] Form Pour [4] Deck Page D1	Min. Brace Anchorage [6] Metal [5] Deck Page D2
				2-Way Transverse Brace Pattern (B19.20)					4-Way T/L Details (B19.22)				
3	10	130	1/2	44	165	C12AA04WS	N2	L2	132	494	C12AA04WS	N5	L5
4	10	176	5/8	51	260	C58AA04WS	N3	L3	154	781	C58AA06WS	N8	L8
				TRANSVERSE, LONGITUDINAL BRACING REQUIREMENTS (SELECT EITHER T/L OR SPLAY)									
				4-Way T/L Details (B19.22)					4-Way Splay Details (B19.23)				
3	10	130	1/2	44	165	C12AA04WS	N2	L2	44	165	C12AA04WS	N2	L2
4	10	176	5/8	51	260	C58AA04WS	N3	L3	51	260	C58AA04WS	N3	L3

SINGLE HUNG RIGID METAL CONDUIT (RMC) [9] — MAXIMUM SEISMIC DESIGN FORCE = 0.25 G's

Maximum Pipe Diameter (in.)	Max. Vertical Support Spacing (ft.)	Rod [1] Total Vertical Load (lbs)	Min. [8] Vertical Support Rod Dia. (in.)	TRANSVERSE BRACING REQUIREMENTS: Max. [2] Brace Spacing (ft.)	Brace [3] Reaction P (lbs)	Min. Brace Assembly E - Pages	Min. Brace Anchorage [6] Form Pour [4] Deck Page D1	Min. Brace Anchorage [6] Metal [5] Deck Page D2	LONGITUDINAL BRACING REQUIREMENTS: Max. [2] Brace Spacing (ft.)	Brace [3] Reaction P (lbs)	Min. Brace Assembly E - Pages	Min. Brace Anchorage [6] Form Pour [4] Deck Page D1	Min. Brace Anchorage [6] Metal [5] Deck Page D2
				2-Way Transverse Brace Pattern (B19.20)					4-Way T/L Details (B19.22)				
3	10	192	1/2	50	280	C12AA04WS	N3	L3	151	839	C12AA06WS	N9	L9
4	10	262	5/8	58	439	C58AA04WS	N5	L5	174	1,318	C58AA06WS	N14	L14
5	10	418	5/8	56	674	C58AA06WS	N7	L7	112	1,348	C58AA06WS	N14	L14
6	10	779	5/8	31	696	C58AA06WS	N7	L7	62	1,391	C58AA06WS	N14	L14
				TRANSVERSE, LONGITUDINAL BRACING REQUIREMENTS (SELECT EITHER T/L OR SPLAY)									
				4-Way T/L Details (B19.22)					4-Way Splay Details (B19.23)				
3	10	192	1/2	50	280	C12AA04WS	N3	L3	50	280	C12AA04WS	N3	L3
4	10	262	5/8	58	439	C58AA04WS	N5	L5	58	589	C58AA04WS	N6	L6
5	10	418	5/8	63	753	C58AA06WS	N8	L8	63	1,010	C58AA06WS	N11	L11
6	10	779	5/8	60	1,346	C58AA06WS	N14	L14	60	1,807	C58DG06TS	N19	L19

1. TVL = DL + Fv + ($0.2S_{DS}$/1.4 x Wp). All Terms Are Working Loads.
2. Reductions In Actual Installed Brace Spacing Will Result In An Equal Percentage Reduction In Brace Reaction. As An Option When This Occurs ISAT May Substitute An Alternate Anchorage From Tables D1 or D2 Which Meets or Exceeds The Lowered Brace Reaction.
3. At Max. 50 Degree Brace Inclination.
4. Min. 3,000 psi NWC. Any "N Series" Connection May Be Utilized Having A Numeric Designation Equal To Or Higher Than That Shown.
5. Min. 3,000 psi NWC or LWC. Any "L Series" Connection May Be Utilized Having A Numeric Designation Equal To Or Higher Than That Shown.
6. As An Alternate, Brace Anchorage Connections To Structure May Be Employed Using Any Detail From Structural Connections Section "D" Series Details Where Assembly Design Value Meets Or Exceeds Brace Reaction.
7. For Trade Specific Bracing Installation Notes, Refer To Page7.1
8. Utilize Any "G" Series Vertical Support Connection Having A Design Value Equal To Or Greater Than The Corresponding "Rod Total Vertical Load".
9. Based on Conductor Filled Conduit Weight. Refer to X-Series Weight Charts.

REGISTERED PROFESSIONAL ENGINEER MARCIN WASAZNIK S-6612 STRUCTURAL STATE OF CALIFORNIA

ISAT
A Division of Tomarco Contractor Specialties

International Seismic Application Technology
14848 Northam Street, La Mirada, CA 90638
877-999-4728 (Toll Free) 714-523-0845 (Fax)
www.isatsb.com

Rev. 1
03/12/19
Page
C32-0.25-45

REVIEWED FOR CODE COMPLIANCE BY: OPM-0403 William Staehlin DATE: 01-26-2024 CALIFORNIA BUILDING CODE 2022

CABLE BRACING REQUIREMENTS [7:]

SINGLE HUNG EMT CONDUIT [9] — **MAXIMUM SEISMIC DESIGN FORCE = 0.25 G's**

Requires Use of ISAT Seismic Brackets. Use of Any Non-ISAT Bracket Voids Engineering. — *2013 California Building Code Compliant*

Maximum Pipe Diameter (in.)	Max. Vertical Support Spacing (ft.)	Rod [1] Total Vertical Load (lbs)	Min. [8] Vertical Support Rod Dia. (in.)	TRANSVERSE BRACING REQUIREMENTS: Max. [2] Brace Spacing (ft.)	Brace [3] Reaction P (lbs)	Min. Brace Assembly E - Pages	Min. Brace Anchorage [6] Form Pour [4] Deck Page D1	Min. Brace Anchorage [6] Metal [5] Deck Page D2	LONGITUDINAL BRACING REQUIREMENTS: Max. [2] Brace Spacing (ft.)	Brace [3] Reaction P (lbs)	Min. Brace Assembly E - Pages	Min. Brace Anchorage [6] Form Pour [4] Deck Page D1	Min. Brace Anchorage [6] Metal [5] Deck Page D2
				2-Way Transverse Brace Pattern (B19.20)					**4-Way T/L Details (B19.22)**				
3	10	130	1/2	44	212	C12AA04WS	N3	L3	132	636	C12AA04WS	N7	L7
4	10	176	5/8	51	335	C58AA04WS	N4	L4	154	1,004	C58AA06WS	N11	L11
				TRANSVERSE, LONGITUDINAL BRACING REQUIREMENTS (SELECT EITHER T/L OR SPLAY)									
				4-Way T/L Details (B19.22)					**4-Way Splay Details (B19.23)**				
3	10	130	1/2	44	212	C12AA04WS	N3	L3	44	212	C12AA04WS	N3	L3
4	10	176	5/8	51	335	C58AA04WS	N4	L4	51	335	C58AA04WS	N4	L4

SINGLE HUNG RIGID METAL CONDUIT (RMC) [9] — **MAXIMUM SEISMIC DESIGN FORCE = 0.25 G's**

Maximum Pipe Diameter (in.)	Max. Vertical Support Spacing (ft.)	Rod [1] Total Vertical Load (lbs)	Min. [8] Vertical Support Rod Dia. (in.)	TRANSVERSE BRACING REQUIREMENTS: Max. [2] Brace Spacing (ft.)	Brace [3] Reaction P (lbs)	Min. Brace Assembly E - Pages	Min. Brace Anchorage [6] Form Pour [4] Deck Page D1	Min. Brace Anchorage [6] Metal [5] Deck Page D2	LONGITUDINAL BRACING REQUIREMENTS: Max. [2] Brace Spacing (ft.)	Brace [3] Reaction P (lbs)	Min. Brace Assembly E - Pages	Min. Brace Anchorage [6] Form Pour [4] Deck Page D1	Min. Brace Anchorage [6] Metal [5] Deck Page D2
				2-Way Transverse Brace Pattern (B19.20)					**4-Way T/L Details (B19.22)**				
3	10	192	1/2	50	359	C12AA04WS	N4	L4	101	719	C12AA06WS	N8	L8
4	10	262	5/8	58	565	C58AA04WS	N6	L6	116	1,129	C58AA06WS	N12	L12
5	10	418	5/8	38	588	C58AA04WS	N6	L6	76	1,176	C58AA06WS	N12	L12
6	10	779	5/8	21	606	C58AA04WS	N7	L7	42	1,212	C58AA06WS	N13	L13
				TRANSVERSE, LONGITUDINAL BRACING REQUIREMENTS (SELECT EITHER T/L OR SPLAY)									
				4-Way T/L Details (B19.22)					**4-Way Splay Details (B19.23)**				
3	10	192	1/2	50	359	C12AA04WS	N4	L4	50	359	C12AA04WS	N4	L4
4	10	262	5/8	58	565	C58AA04WS	N6	L6	58	565	C58AA04WS	N6	L6
5	10	418	5/8	63	968	C58AA06WS	N10	L10	63	968	C58AA06WS	N10	L10
6	10	779	5/8	43	1,241	C58AA06WS	N13	L13	43	1,241	C58AA06WS	N13	L13

1. TVL = DL + Fv + ($0.2S_{DS}$/1.4 x Wp). All Terms Are Working Loads.
2. Reductions In Actual Installed Brace Spacing Will Result In An Equal Percentage Reduction In Brace Reaction. As An Option When This Occurs ISAT May Substitute An Alternate Anchorage From Tables D1 or D2 Which Meets or Exceeds The Lowered Brace Reaction.
3. At Max. 60 Degree Brace Inclination.
4. Min. 3,000 psi NWC. Any "N Series" Connection May Be Utilized Having A Numeric Designation Equal To Or Higher Than That Shown.
5. Min. 3,000 psi NWC or LWC. Any "L Series" Connection May Be Utilized Having A Numeric Designation Equal To Or Higher Than That Shown.
6. As An Alternate, Brace Anchorage Connections To Structure May Be Employed Using Any Detail From Structural Connections Section "D" Series Details Where Assembly Design Value Meets Or Exceeds Brace Reaction.
7. For Trade Specific Bracing Installation Notes, Refer To Page7.1
8. Utilize Any "G" Series Vertical Support Connection Having A Design Value Equal To Or Greater Than The Corresponding "Rod Total Vertical Load".
9. Based on Conductor Filled Conduit Weight. Refer to X-Series Weight Charts.

REGISTERED PROFESSIONAL ENGINEER MARCIN WASAZNIK S-6612 STRUCTURAL STATE OF CALIFORNIA

ISAT
A Division of Tomarco Contractor Specialties

International Seismic Application Technology
14848 Northam Street, La Mirada, CA 90638
877-999-4728 (Toll Free) 714-523-0845 (Fax)
www.isatsb.com

Rev. 1
03/12/19
Page
C32-0.25-60

REVIEWED FOR CODE COMPLIANCE BY: OPM-0403 William Staehlin DATE: 01-26-2024 CALIFORNIA BUILDING CODE 2022

CABLE BRACING REQUIREMENTS [7]:

SINGLE HUNG EMT CONDUIT [9] — **MAXIMUM SEISMIC DESIGN FORCE = 0.50 G's**

Requires Use of ISAT Seismic Brackets. Use of Any Non-ISAT Bracket Voids Engineering. — *2013 California Building Code Compliant*

Maximum Pipe Diameter (in.)	Max. Vertical Support Spacing (ft.)	Rod [1] Total Vertical Load (lbs)	Min. [8] Vertical Support Rod Dia. (in.)	TRANSVERSE BRACING REQUIREMENTS: Max. [2] Brace Spacing (ft.)	Brace [3] Reaction P (lbs)	Min. Brace Assembly E - Pages	Min. Brace Anchorage [6] Form Pour [4] Deck Page D1	Min. Brace Anchorage [6] Metal [5] Deck Page D2	LONGITUDINAL BRACING REQUIREMENTS: Max. [2] Brace Spacing (ft.)	Brace [3] Reaction P (lbs)	Min. Brace Assembly E - Pages	Min. Brace Anchorage [6] Form Pour [4] Deck Page D1	Min. Brace Anchorage [6] Metal [5] Deck Page D2
				2-Way Transverse Brace Pattern (B19.20)					**4-Way T/L Details (B19.22)**				
3	10	130	1/2	37	206	C12AA04WS	N3	L3	111	617	C12AA04WS	N7	L7
4	10	176	5/8	43	325	C58AA04WS	N4	L4	127	955	C58AA06WS	N10	L10
				TRANSVERSE, LONGITUDINAL BRACING REQUIREMENTS (SELECT EITHER T/L OR SPLAY)									
				4-Way T/L Details (B19.22)					**4-Way Splay Details (B19.23)**				
3	10	130	1/2	37	206	C12AA04WS	N3	L3	37	206	C12AA04WS	N3	L3
4	10	176	5/8	43	325	C58AA04WS	N4	L4	43	325	C58AA04WS	N4	L4

SINGLE HUNG RIGID METAL CONDUIT (RMC) [9] — **MAXIMUM SEISMIC DESIGN FORCE = 0.50 G's**

Maximum Pipe Diameter (in.)	Max. Vertical Support Spacing (ft.)	Rod [1] Total Vertical Load (lbs)	Min. [8] Vertical Support Rod Dia. (in.)	TRANSVERSE BRACING REQUIREMENTS: Max. [2] Brace Spacing (ft.)	Brace [3] Reaction P (lbs)	Min. Brace Assembly E - Pages	Min. Brace Anchorage [6] Form Pour [4] Deck Page D1	Min. Brace Anchorage [6] Metal [5] Deck Page D2	LONGITUDINAL BRACING REQUIREMENTS: Max. [2] Brace Spacing (ft.)	Brace [3] Reaction P (lbs)	Min. Brace Assembly E - Pages	Min. Brace Anchorage [6] Form Pour [4] Deck Page D1	Min. Brace Anchorage [6] Metal [5] Deck Page D2
				2-Way Transverse Brace Pattern (B19.20)					**4-Way T/L Details (B19.22)**				
3	10	192	1/2	42	349	C12AA04WS	N4	L4	127	1,047	C12AA06WS	N11	L11
4	10	262	5/8	49	548	C58AA04WS	N6	L6	112	1,255	C58AA06WS	N13	L13
5	10	418	5/8	53	940	C58AA06WS	N10	L10	66	1,185	C58AA06WS	N12	L12
6	10	779	5/8	36	1,215	C58AA06WS	N13	L13	41	1,365	C58AA06WS	N14	L14
				TRANSVERSE, LONGITUDINAL BRACING REQUIREMENTS (SELECT EITHER T/L OR SPLAY)									
				4-Way T/L Details (B19.22)					**4-Way Splay Details (B19.23)**				
3	10	192	1/2	42	349	C12AA04WS	N4	L4	42	349	C12AA04WS	N4	L4
4	10	262	5/8	49	548	C58AA04WS	N6	L6	49	548	C58AA04WS	N6	L6
5	10	418	5/8	53	940	C58AA06WS	N10	L10	53	940	C58AA06WS	N10	L10
6	10	779	5/8	36	1,215	C58AA06WS	N13	L13	36	1,215	C58AA06WS	N13	L13

1. TVL = DL + Fv + ($0.2S_{DS}$/1.4 x Wp). All Terms Are Working Loads.
2. Reductions In Actual Installed Brace Spacing Will Result In An Equal Percentage Reduction In Brace Reaction. As An Option When This Occurs ISAT May Substitute An Alternate Anchorage From Tables D1 or D2 Which Meets or Exceeds The Lowered Brace Reaction.
3. At Max. 30 Degree Brace Inclination.
4. Min. 3,000 psi NWC. Any "N Series" Connection May Be Utilized Having A Numeric Designation Equal To Or Higher Than That Shown.
5. Min. 3,000 psi NWC or LWC. Any "L Series" Connection May Be Utilized Having A Numeric Designation Equal To Or Higher Than That Shown.
6. As An Alternate, Brace Anchorage Connections To Structure May Be Employed Using Any Detail From Structural Connections Section "D" Series Details Where Assembly Design Value Meets Or Exceeds Brace Reaction.
7. For Trade Specific Bracing Installation Notes, Refer To Page7.1
8. Utilize Any "G" Series Vertical Support Connection Having A Design Value Equal To Or Greater Than The Corresponding "Rod Total Vertical Load".
9. Based on Conductor Filled Conduit Weight. Refer to X-Series Weight Charts.

REGISTERED PROFESSIONAL ENGINEER MARCIN WASAZNIK S-6612 STRUCTURAL STATE OF CALIFORNIA

ISAT
A Division of Tomarco Contractor Specialties

International Seismic Application Technology
14848 Northam Street, La Mirada, CA 90638
877-999-4728 (Toll Free) 714-523-0845 (Fax)
www.isatsb.com

Rev. 1
03/12/19
Page
C32-0.5-30

REVIEWED FOR CODE COMPLIANCE BY: OPM-0403 William Staehlin DATE: 01-26-2024 CALIFORNIA BUILDING CODE 2022

CABLE BRACING REQUIREMENTS [7]:

SINGLE HUNG EMT CONDUIT [9] — **MAXIMUM SEISMIC DESIGN FORCE = 0.50 G's**

Requires Use of ISAT Seismic Brackets. Use of Any Non-ISAT Bracket Voids Engineering. — *2013 California Building Code Compliant*

Maximum Pipe Diameter (in.)	Max. Vertical Support Spacing (ft.)	Rod [1] Total Vertical Load (lbs)	Min. [8] Vertical Support Rod Dia. (in.)	TRANSVERSE BRACING REQUIREMENTS: Max. [2] Brace Spacing (ft.)	Brace [3] Reaction P (lbs)	Min. Brace Assembly E - Pages	Min. Brace Anchorage [6] Form Pour [4] Deck Page D1	Min. Brace Anchorage [6] Metal [5] Deck Page D2	LONGITUDINAL BRACING REQUIREMENTS: Max. [2] Brace Spacing (ft.)	Brace [3] Reaction P (lbs)	Min. Brace Assembly E - Pages	Min. Brace Anchorage [6] Form Pour [4] Deck Page D1	Min. Brace Anchorage [6] Metal [5] Deck Page D2
				2-Way Transverse Brace Pattern (B19.20)					**4-Way T/L Details (B19.22)**				
3	10	130	1/2	37	277	C12AA04WS	N3	L3	111	832	C12AA06WS	N9	L9
4	10	176	5/8	43	438	C58AA04WS	N5	L5	126	1,285	C58AA06WS	N13	L13
				TRANSVERSE, LONGITUDINAL BRACING REQUIREMENTS (SELECT EITHER T/L OR SPLAY)									
				4-Way T/L Details (B19.22)					**4-Way Splay Details (B19.23)**				
3	10	130	1/2	37	277	C12AA04WS	N3	L3	37	277	C12AA04WS	N3	L3
4	10	176	5/8	43	438	C58AA04WS	N5	L5	43	438	C58AA04WS	N5	L5

SINGLE HUNG RIGID METAL CONDUIT (RMC) [9] — **MAXIMUM SEISMIC DESIGN FORCE = 0.50 G's**

Maximum Pipe Diameter (in.)	Max. Vertical Support Spacing (ft.)	Rod [1] Total Vertical Load (lbs)	Min. [8] Vertical Support Rod Dia. (in.)	TRANSVERSE BRACING REQUIREMENTS: Max. [2] Brace Spacing (ft.)	Brace [3] Reaction P (lbs)	Min. Brace Assembly E - Pages	Min. Brace Anchorage [6] Form Pour [4] Deck Page D1	Min. Brace Anchorage [6] Metal [5] Deck Page D2	LONGITUDINAL BRACING REQUIREMENTS: Max. [2] Brace Spacing (ft.)	Brace [3] Reaction P (lbs)	Min. Brace Assembly E - Pages	Min. Brace Anchorage [6] Form Pour [4] Deck Page D1	Min. Brace Anchorage [6] Metal [5] Deck Page D2
				2-Way Transverse Brace Pattern (B19.20)					**4-Way T/L Details (B19.22)**				
3	10	192	1/2	42	470	C12AA04WS	N5	L5	85	941	C12AA06WS	N10	L10
4	10	262	5/8	43	650	C58AA04WS	N7	L7	86	1,300	C58AA06WS	N14	L14
5	10	418	5/8	28	674	C58AA06WS	N7	L7	56	1,348	C58AA06WS	N14	L14
6	10	779	5/8	15	673	C58AA06WS	N7	L7	30	1,346	C58AA06WS	N14	L14
				TRANSVERSE, LONGITUDINAL BRACING REQUIREMENTS (SELECT EITHER T/L OR SPLAY)									
				4-Way T/L Details (B19.22)					**4-Way Splay Details (B19.23)**				
3	10	192	1/2	42	470	C12AA04WS	N5	L5	42	470	C12AA04WS	N5	L5
4	10	262	5/8	49	739	C58AA06WS	N8	L8	49	739	C58AA06WS	N8	L8
5	10	418	5/8	53	1,266	C58AA06WS	N13	L13	53	1,266	C58AA06WS	N13	L13
6	10	779	5/8	31	1,391	C58AA06WS	N14	L14	31	1,391	C58AA06WS	N14	L14

1. TVL = DL + Fv + ($0.2S_{DS}$/1.4 x Wp). All Terms Are Working Loads.
2. Reductions In Actual Installed Brace Spacing Will Result In An Equal Percentage Reduction In Brace Reaction. As An Option When This Occurs ISAT May Substitute An Alternate Anchorage From Tables D1 or D2 Which Meets or Exceeds The Lowered Brace Reaction.
3. At Max. 50 Degree Brace Inclination.
4. Min. 3,000 psi NWC. Any "N Series" Connection May Be Utilized Having A Numeric Designation Equal To Or Higher Than That Shown.
5. Min. 3,000 psi NWC or LWC. Any "L Series" Connection May Be Utilized Having A Numeric Designation Equal To Or Higher Than That Shown.
6. As An Alternate, Brace Anchorage Connections To Structure May Be Employed Using Any Detail From Structural Connections Section "D" Series Details Where Assembly Design Value Meets Or Exceeds Brace Reaction.
7. For Trade Specific Bracing Installation Notes, Refer To Page7.1
8. Utilize Any "G" Series Vertical Support Connection Having A Design Value Equal To Or Greater Than The Corresponding "Rod Total Vertical Load".
9. Based on Conductor Filled Conduit Weight. Refer to X-Series Weight Charts.

REGISTERED PROFESSIONAL ENGINEER MARCIN WASAZNIK S-6612 STRUCTURAL STATE OF CALIFORNIA

ISAT
A Division of Tomarco Contractor Specialties

International Seismic Application Technology
14848 Northam Street, La Mirada, CA 90638
877-999-4728 (Toll Free) 714-523-0845 (Fax)
www.isatsb.com

Rev. 1
03/12/19
Page
C32-0.5-45

REVIEWED FOR CODE COMPLIANCE BY ISAT
OPM-0403
BY: William Staehlin
DATE: 01-26-2024
CALIFORNIA BUILDING CODE 2022

CABLE BRACING REQUIREMENTS [7:]

SINGLE HUNG EMT CONDUIT [9] — **MAXIMUM SEISMIC DESIGN FORCE = 0.50 G's**

Requires Use of ISAT Seismic Brackets. Use of Any Non-ISAT Bracket Voids Engineering. — *2013 California Building Code Compliant*

Maximum Pipe Diameter (in.)	Max. Vertical Support Spacing (ft.)	Rod [1] Total Vertical Load (lbs)	Min. [8] Vertical Support Rod Dia. (in.)	TRANSVERSE BRACING REQUIREMENTS: Max. [2] Brace Spacing (ft.)	Brace [3] Reaction P (lbs)	Min. Brace Assembly E - Pages	Min. Brace Anchorage [6] Form Pour [4] Deck Page D1	Min. Brace Anchorage [6] Metal [5] Deck Page D2	LONGITUDINAL BRACING REQUIREMENTS: Max. [2] Brace Spacing (ft.)	Brace [3] Reaction P (lbs)	Min. Brace Assembly E - Pages	Min. Brace Anchorage [6] Form Pour [4] Deck Page D1	Min. Brace Anchorage [6] Metal [5] Deck Page D2
				2-Way Transverse Brace Pattern (B19.20)					**4-Way T/L Details (B19.22)**				
3	10	130	1/2	37	356	C12AA04WS	N4	L4	74	713	C12AA06WS	N8	L8
4	10	176	5/8	43	563	C58AA04WS	N6	L6	86	1,126	C58AA06WS	N12	L12
				TRANSVERSE, LONGITUDINAL BRACING REQUIREMENTS (SELECT EITHER T/L OR SPLAY)									
				4-Way T/L Details (B19.22)					**4-Way Splay Details (B19.23)**				
3	10	130	1/2	37	356	C12AA04WS	N4	L4	37	356	C12AA04WS	N4	L4
4	10	176	5/8	43	563	C58AA04WS	N6	L6	43	563	C58AA04WS	N6	L6

SINGLE HUNG RIGID METAL CONDUIT (RMC) [9] — **MAXIMUM SEISMIC DESIGN FORCE = 0.50 G's**

				2-Way Transverse Brace Pattern (B19.20)					**4-Way T/L Details (B19.22)**				
3	10	192	1/2	29	413	C12AA04WS	N5	L5	58	826	C12AA06WS	N9	L9
4	10	262	5/8	30	583	C58AA04WS	N6	L6	60	1,166	C58AA06WS	N12	L12
5	10	418	5/8	18	557	C58AA04WS	N6	L6	36	1,114	C58AA06WS	N12	L12
6	10	779	5/8	10	577	C58AA04WS	N6	L6	20	1,154	C58AA06WS	N12	L12
				TRANSVERSE, LONGITUDINAL BRACING REQUIREMENTS (SELECT EITHER T/L OR SPLAY)									
				4-Way T/L Details (B19.22)					**4-Way Splay Details (B19.23)**				
3	10	192	1/2	42	605	C12AA04WS	N7	L7	42	605	C12AA04WS	N7	L7
4	10	262	5/8	49	950	C58AA06WS	N10	L10	49	950	C58AA06WS	N10	L10
5	10	418	5/8	38	1,176	C58AA06WS	N12	L12	38	1,176	C58AA06WS	N12	L12
6	10	779	5/8	21	1,212	C58AA06WS	N13	L13	21	1,212	C58AA06WS	N13	L13

1. TVL = DL + Fv + ($0.2S_{DS}$/1.4 x Wp). All Terms Are Working Loads.
2. Reductions In Actual Installed Brace Spacing Will Result In An Equal Percentage Reduction In Brace Reaction. As An Option When This Occurs ISAT May Substitute An Alternate Anchorage From Tables D1 or D2 Which Meets or Exceeds The Lowered Brace Reaction.
3. At Max. 60 Degree Brace Inclination.
4. Min. 3,000 psi NWC. Any "N Series" Connection May Be Utilized Having A Numeric Designation Equal To Or Higher Than That Shown.
5. Min. 3,000 psi NWC or LWC. Any "L Series" Connection May Be Utilized Having A Numeric Designation Equal To Or Higher Than That Shown.
6. As An Alternate, Brace Anchorage Connections To Structure May Be Employed Using Any Detail From Structural Connections Section "D" Series Details Where Assembly Design Value Meets Or Exceeds Brace Reaction.
7. For Trade Specific Bracing Installation Notes, Refer To Page7.1
8. Utilize Any "G" Series Vertical Support Connection Having A Design Value Equal To Or Greater Than The Corresponding "Rod Total Vertical Load".
9. Based on Conductor Filled Conduit Weight. Refer to X-Series Weight Charts.

REGISTERED PROFESSIONAL ENGINEER MARCIN WASAZNIK S-6612 STRUCTURAL STATE OF CALIFORNIA

ISAT
A Division of Tomarco Contractor Specialties

International Seismic Application Technology
14848 Northam Street, La Mirada, CA 90638
877-999-4728 (Toll Free) 714-523-0845 (Fax)
www.isatsb.com

Rev. 1
03/12/19
Page
C32-0.5-60

REVIEWED FOR CODE COMPLIANCE BY ISAT
OPM-0403
BY: William Staehlin
DATE: 01-26-2024
CALIFORNIA BUILDING CODE 2022

CABLE BRACING REQUIREMENTS [7]:

SINGLE HUNG EMT CONDUIT [9] — **MAXIMUM SEISMIC DESIGN FORCE = 0.75 G's**

Requires Use of ISAT Seismic Brackets. Use of Any Non-ISAT Bracket Voids Engineering. — *2013 California Building Code Compliant*

Maximum Pipe Diameter (in.)	Max. Vertical Support Spacing (ft.)	Rod [1] Total Vertical Load (lbs)	Min. [8] Vertical Support Rod Dia. (in.)	TRANSVERSE BRACING REQUIREMENTS: Max. [2] Brace Spacing (ft.)	Brace [3] Reaction P (lbs)	Min. Brace Assembly E - Pages	Min. Brace Anchorage [6] Form Pour [4] Deck Page D1	Min. Brace Anchorage [6] Metal [5] Deck Page D2	LONGITUDINAL BRACING REQUIREMENTS: Max. [2] Brace Spacing (ft.)	Brace [3] Reaction P (lbs)	Min. Brace Assembly E - Pages	Min. Brace Anchorage [6] Form Pour [4] Deck Page D1	Min. Brace Anchorage [6] Metal [5] Deck Page D2
				2-Way Transverse Brace Pattern (B19.20)					**4-Way T/L Details (B19.22)**				
3	10	130	1/2	34	279	C12AA04WS	N3	L3	101	837	C12AA06WS	N9	L9
4	10	176	5/8	39	440	C58AA04WS	N5	L5	84	955	C58AA06WS	N10	L10
				TRANSVERSE, LONGITUDINAL BRACING REQUIREMENTS (SELECT EITHER T/L OR SPLAY)									
				4-Way T/L Details (B19.22)					**4-Way Splay Details (B19.23)**				
3	10	130	1/2	34	279	C12AA04WS	N3	L3	34	279	C12AA04WS	N3	L3
4	10	176	5/8	39	440	C58AA04WS	N5	L5	39	591	C58AA04WS	N6	L6

SINGLE HUNG RIGID METAL CONDUIT (RMC) [9] — **MAXIMUM SEISMIC DESIGN FORCE = 0.75 G's**

Maximum Pipe Diameter (in.)	Max. Vertical Support Spacing (ft.)	Rod [1] Total Vertical Load (lbs)	Min. [8] Vertical Support Rod Dia. (in.)	TRANSVERSE BRACING REQUIREMENTS: Max. [2] Brace Spacing (ft.)	Brace [3] Reaction P (lbs)	Min. Brace Assembly E - Pages	Min. Brace Anchorage [6] Form Pour [4] Deck Page D1	Min. Brace Anchorage [6] Metal [5] Deck Page D2	LONGITUDINAL BRACING REQUIREMENTS: Max. [2] Brace Spacing (ft.)	Brace [3] Reaction P (lbs)	Min. Brace Assembly E - Pages	Min. Brace Anchorage [6] Form Pour [4] Deck Page D1	Min. Brace Anchorage [6] Metal [5] Deck Page D2
				2-Way Transverse Brace Pattern (B19.20)					**4-Way T/L Details (B19.22)**				
3	10	192	1/2	38	473	C12AA04WS	N5	L5	87	1,070	C12AA06WS	N11	L11
4	10	262	5/8	44	743	C58AA06WS	N8	L8	75	1,255	C58AA06WS	N13	L13
5	10	418	5/8	39	1,035	C58AA06WS	N11	L11	44	1,185	C58AA06WS	N12	L12
6	10	779	5/8	24	1,215	C58AA06WS	N13	L13	27	1,365	C58AA06WS	N14	L14
				TRANSVERSE, LONGITUDINAL BRACING REQUIREMENTS (SELECT EITHER T/L OR SPLAY)									
				4-Way T/L Details (B19.22)					**4-Way Splay Details (B19.23)**				
3	10	192	1/2	38	473	C12AA04WS	N5	L5	38	473	C12AA04WS	N5	L5
4	10	262	5/8	44	743	C58AA06WS	N8	L8	44	743	C58AA06WS	N8	L8
5	10	418	5/8	39	1,035	C58AA06WS	N11	L11	39	1,035	C58AA06WS	N11	L11
6	10	779	5/8	24	1,215	C58AA06WS	N13	L13	24	1,215	C58AA06WS	N13	L13

1. TVL = DL + Fv + ($0.2S_{DS}$/1.4 x Wp). All Terms Are Working Loads.
2. Reductions In Actual Installed Brace Spacing Will Result In An Equal Percentage Reduction In Brace Reaction. As An Option When This Occurs ISAT May Substitute An Alternate Anchorage From Tables D1 or D2 Which Meets or Exceeds The Lowered Brace Reaction.
3. At Max. 30 Degree Brace Inclination.
4. Min. 3,000 psi NWC. Any "N Series" Connection May Be Utilized Having A Numeric Designation Equal To Or Higher Than That Shown.
5. Min. 3,000 psi NWC or LWC. Any "L Series" Connection May Be Utilized Having A Numeric Designation Equal To Or Higher Than That Shown.
6. As An Alternate, Brace Anchorage Connections To Structure May Be Employed Using Any Detail From Structural Connections Section "D" Series Details Where Assembly Design Value Meets Or Exceeds Brace Reaction.
7. For Trade Specific Bracing Installation Notes, Refer To Page7.1
8. Utilize Any "G" Series Vertical Support Connection Having A Design Value Equal To Or Greater Than The Corresponding "Rod Total Vertical Load".
9. Based on Conductor Filled Conduit Weight. Refer to X-Series Weight Charts.

REGISTERED PROFESSIONAL ENGINEER MARCIN WASAZNIK S-6612 STRUCTURAL STATE OF CALIFORNIA

ISAT
A Division of Tomarco Contractor Specialties

International Seismic Application Technology
14848 Northam Street, La Mirada, CA 90638
877-999-4728 (Toll Free) 714-523-0845 (Fax)
www.isatsb.com

Rev. 1
03/12/19
Page
C32-0.75-30

REVIEWED FOR CODE COMPLIANCE OPM-0403 BY: William Staehlin DATE: 01-26-2024 CALIFORNIA BUILDING CODE 2022

CABLE BRACING REQUIREMENTS [7]:

SINGLE HUNG EMT CONDUIT [9] — **MAXIMUM SEISMIC DESIGN FORCE = 0.75 G's**

Requires Use of ISAT Seismic Brackets. Use of Any Non-ISAT Bracket Voids Engineering. — *2013 California Building Code Compliant*

Maximum Pipe Diameter (in.)	Max. Vertical Support Spacing (ft.)	Rod [1] Total Vertical Load (lbs)	Min. [8] Vertical Support Rod Dia. (in.)	TRANSVERSE BRACING REQUIREMENTS: Max. [2] Brace Spacing (ft.)	Brace [3] Reaction P (lbs)	Min. Brace Assembly E - Pages	Min. Brace Anchorage [6] Form Pour [4] Deck Page D1	Min. Brace Anchorage [6] Metal [5] Deck Page D2	LONGITUDINAL BRACING REQUIREMENTS: Max. [2] Brace Spacing (ft.)	Brace [3] Reaction P (lbs)	Min. Brace Assembly E - Pages	Min. Brace Anchorage [6] Form Pour [4] Deck Page D1	Min. Brace Anchorage [6] Metal [5] Deck Page D2
				2-Way Transverse Brace Pattern (B19.20)					**4-Way T/L Details (B19.22)**				
3	10	130	1/2	34	376	C12AA04WS	N4	L4	67	751	C12AA06WS	N8	L8
4	10	176	5/8	39	593	C58AA04WS	N6	L6	84	1,285	C58AA06WS	N13	L13
				TRANSVERSE, LONGITUDINAL BRACING REQUIREMENTS (SELECT EITHER T/L OR SPLAY)									
				4-Way T/L Details (B19.22)					**4-Way Splay Details (B19.23)**				
3	10	130	1/2	34	376	C12AA04WS	N4	L4	34	376	C12AA04WS	N4	L4
4	10	176	5/8	39	593	C58AA04WS	N6	L6	39	593	C58AA04WS	N6	L6

SINGLE HUNG RIGID METAL CONDUIT (RMC) [9] — **MAXIMUM SEISMIC DESIGN FORCE = 0.75 G's**

				2-Way Transverse Brace Pattern (B19.20)					**4-Way T/L Details (B19.22)**				
3	10	192	1/2	28	465	C12AA04WS	N5	L5	56	930	C12AA06WS	N10	L10
4	10	262	5/8	28	635	C58AA04WS	N7	L7	56	1,270	C58AA06WS	N13	L13
5	10	418	5/8	18	650	C58AA04WS	N7	L7	36	1,300	C58AA06WS	N14	L14
6	10	779	5/8	10	673	C58AA06WS	N7	L7	20	1,346	C58AA06WS	N14	L14
				TRANSVERSE, LONGITUDINAL BRACING REQUIREMENTS (SELECT EITHER T/L OR SPLAY)									
				4-Way T/L Details (B19.22)					**4-Way Splay Details (B19.23)**				
3	10	192	1/2	38	637	C12AA04WS	N7	L7	38	637	C12AA04WS	N7	L7
4	10	262	5/8	44	1,001	C58AA06WS	N11	L11	44	1,001	C58AA06WS	N11	L11
5	10	418	5/8	37	1,345	C58AA06WS	N14	L14	37	1,345	C58AA06WS	N14	L14
6	10	779	5/8	20	1,346	C58AA06WS	N14	L14	20	1,346	C58AA06WS	N14	L14

1. TVL = DL + Fv + ($0.2S_{DS}$/1.4 x Wp). All Terms Are Working Loads.
2. Reductions In Actual Installed Brace Spacing Will Result In An Equal Percentage Reduction In Brace Reaction. As An Option When This Occurs ISAT May Substitute An Alternate Anchorage From Tables D1 or D2 Which Meets or Exceeds The Lowered Brace Reaction.
3. At Max. 50 Degree Brace Inclination.
4. Min. 3,000 psi NWC. Any "N Series" Connection May Be Utilized Having A Numeric Designation Equal To Or Higher Than That Shown.
5. Min. 3,000 psi NWC or LWC. Any "L Series" Connection May Be Utilized Having A Numeric Designation Equal To Or Higher Than That Shown.
6. As An Alternate, Brace Anchorage Connections To Structure May Be Employed Using Any Detail From Structural Connections Section "D" Series Details Where Assembly Design Value Meets Or Exceeds Brace Reaction.
7. For Trade Specific Bracing Installation Notes, Refer To Page7.1
8. Utilize Any "G" Series Vertical Support Connection Having A Design Value Equal To Or Greater Than The Corresponding "Rod Total Vertical Load".
9. Based on Conductor Filled Conduit Weight. Refer to X-Series Weight Charts.

REGISTERED PROFESSIONAL ENGINEER MARCIN WASAZNIK S-6612 STRUCTURAL STATE OF CALIFORNIA

ISAT
A Division of Tomarco Contractor Specialties

International Seismic Application Technology
14848 Northam Street, La Mirada, CA 90638
877-999-4728 (Toll Free) 714-523-0845 (Fax)
www.isatsb.com

Rev. 1
03/12/19
Page
C32-0.75-45

REVIEWED FOR CODE COMPLIANCE OPM-0403 BY: William Staehlin DATE: 01-26-2024 CALIFORNIA BUILDING CODE 2022

CABLE BRACING REQUIREMENTS [7:]

SINGLE HUNG EMT CONDUIT [9] — **MAXIMUM SEISMIC DESIGN FORCE = 0.75 G's**

Requires Use of ISAT Seismic Brackets. Use of Any Non-ISAT Bracket Voids Engineering. — *2013 California Building Code Compliant*

Maximum Pipe Diameter (in.)	Max. Vertical Support Spacing (ft.)	Rod [1] Total Vertical Load (lbs)	Min. [8] Vertical Support Rod Dia. (in.)	TRANSVERSE BRACING REQUIREMENTS: Max. [2] Brace Spacing (ft.)	Brace [3] Reaction P (lbs)	Min. Brace Assembly E - Pages	Min. Brace Anchorage [6] Form Pour [4] Deck Page D1	Min. Brace Anchorage [6] Metal [5] Deck Page D2	LONGITUDINAL BRACING REQUIREMENTS: Max. [2] Brace Spacing (ft.)	Brace [3] Reaction P (lbs)	Min. Brace Assembly E - Pages	Min. Brace Anchorage [6] Form Pour [4] Deck Page D1	Min. Brace Anchorage [6] Metal [5] Deck Page D2
				2-Way Transverse Brace Pattern (B19.20)					4-Way T/L Details (B19.22)				
3	10	130	1/2	28	403	C12AA04WS	N5	L5	56	806	C12AA06WS	N9	L9
4	10	176	5/8	28	549	C58AA04WS	N6	L6	56	1,098	C58AA06WS	N11	L11
				TRANSVERSE, LONGITUDINAL BRACING REQUIREMENTS (SELECT EITHER T/L OR SPLAY)									
				4-Way T/L Details (B19.22)					4-Way Splay Details (B19.23)				
3	10	130	1/2	34	483	C12AA04WS	N5	L5	34	483	C12AA04WS	N5	L5
4	10	176	5/8	39	763	C58AA06WS	N8	L8	39	763	C58AA06WS	N8	L8

SINGLE HUNG RIGID METAL CONDUIT (RMC) [9] — **MAXIMUM SEISMIC DESIGN FORCE = 0.75 G's**

				2-Way Transverse Brace Pattern (B19.20)					4-Way T/L Details (B19.22)				
3	10	192	1/2	18	384	C12AA04WS	N4	L4	36	769	C12AA06WS	N8	L8
4	10	262	5/8	18	525	C58AA04WS	N6	L6	36	1,050	C58AA06WS	N11	L11
5	10	418	5/8	12	557	C58AA04WS	N6	L6	24	1,114	C58AA06WS	N12	L12
				TRANSVERSE, LONGITUDINAL BRACING REQUIREMENTS (SELECT EITHER T/L OR SPLAY)									
				4-Way T/L Details (B19.22)					4-Way Splay Details (B19.23)				
3	10	192	1/2	38	819	C12AA06WS	N9	L9	38	819	C12AA06WS	N9	L9
4	10	262	5/8	36	1,050	C58AA06WS	N11	L11	36	1,050	C58AA06WS	N11	L11
5	10	418	5/8	22	1,021	C58AA06WS	N11	L11	22	1,021	C58AA06WS	N11	L11
6	10	779	5/8	12	1,039	C58AA06WS	N11	L11	12	1,039	C58AA06WS	N11	L11

1. TVL = DL + Fv + ($0.2S_{DS}$/1.4 x Wp). All Terms Are Working Loads.
2. Reductions In Actual Installed Brace Spacing Will Result In An Equal Percentage Reduction In Brace Reaction. As An Option When This Occurs ISAT May Substitute An Alternate Anchorage From Tables D1 or D2 Which Meets or Exceeds The Lowered Brace Reaction.
3. At Max. 60 Degree Brace Inclination.
4. Min. 3,000 psi NWC. Any "N Series" Connection May Be Utilized Having A Numeric Designation Equal To Or Higher Than That Shown.
5. Min. 3,000 psi NWC or LWC. Any "L Series" Connection May Be Utilized Having A Numeric Designation Equal To Or Higher Than That Shown.
6. As An Alternate, Brace Anchorage Connections To Structure May Be Employed Using Any Detail From Structural Connections Section "D" Series Details Where Assembly Design Value Meets Or Exceeds Brace Reaction.
7. For Trade Specific Bracing Installation Notes, Refer To Page7.1
8. Utilize Any "G" Series Vertical Support Connection Having A Design Value Equal To Or Greater Than The Corresponding "Rod Total Vertical Load".
9. Based on Conductor Filled Conduit Weight. Refer to X-Series Weight Charts.

REGISTERED PROFESSIONAL ENGINEER MARCIN WASAZNIK S-6612 STRUCTURAL STATE OF CALIFORNIA

ISAT
A Division of Tomarco Contractor Specialties

International Seismic Application Technology
14848 Northam Street, La Mirada, CA 90638
877-999-4728 (Toll Free) 714-523-0845 (Fax)
www.isatsb.com

Rev. 1
03/12/19
Page
C32-0.75-60

REVIEWED FOR CODE COMPLIANCE OPM-0403 DATE: 01-26-2024 CALIFORNIA BUILDING CODE 2022

CABLE BRACING REQUIREMENTS [7]:

SINGLE HUNG EMT CONDUIT [9] — **MAXIMUM SEISMIC DESIGN FORCE = 1.00 G's**

Requires Use of ISAT Seismic Brackets. Use of Any Non-ISAT Bracket Voids Engineering. — *2013 California Building Code Compliant*

Maximum Pipe Diameter (in.)	Max. Vertical Support Spacing (ft.)	Rod [1] Total Vertical Load (lbs)	Min. [8] Vertical Support Rod Dia. (in.)	TRANSVERSE BRACING REQUIREMENTS: Max. [2] Brace Spacing (ft.)	Brace [3] Reaction P (lbs)	Min. Brace Assembly E - Pages	Min. Brace Anchorage [6] Form Pour [4] Deck Page D1	Min. Brace Anchorage [6] Metal [5] Deck Page D2	LONGITUDINAL BRACING REQUIREMENTS: Max. [2] Brace Spacing (ft.)	Brace [3] Reaction P (lbs)	Min. Brace Assembly E - Pages	Min. Brace Anchorage [6] Form Pour [4] Deck Page D1	Min. Brace Anchorage [6] Metal [5] Deck Page D2
				2-Way Transverse Brace Pattern (B19.20)					**4-Way T/L Details (B19.22)**				
3	10	130	1/2	31	346	C12AA04WS	N4	L4	82	910	C12AA06WS	N10	L10
4	10	176	5/8	36	546	C58AA04WS	N6	L6	63	955	C58AA06WS	N10	L10
				TRANSVERSE, LONGITUDINAL BRACING REQUIREMENTS (SELECT EITHER T/L OR SPLAY)									
				4-Way T/L Details (B19.22)					**4-Way Splay Details (B19.23)**				
3	10	130	1/2	31	346	C12AA04WS	N4	L4	31	346	C12AA04WS	N4	L4
4	10	176	5/8	36	546	C58AA04WS	N6	L6	36	546	C58AA04WS	N6	L6

SINGLE HUNG RIGID METAL CONDUIT (RMC) [9] — **MAXIMUM SEISMIC DESIGN FORCE = 1.00 G's**

Maximum Pipe Diameter (in.)	Max. Vertical Support Spacing (ft.)	Rod [1] Total Vertical Load (lbs)	Min. [8] Vertical Support Rod Dia. (in.)	TRANSVERSE BRACING REQUIREMENTS: Max. [2] Brace Spacing (ft.)	Brace [3] Reaction P (lbs)	Min. Brace Assembly E - Pages	Min. Brace Anchorage [6] Form Pour [4] Deck Page D1	Min. Brace Anchorage [6] Metal [5] Deck Page D2	LONGITUDINAL BRACING REQUIREMENTS: Max. [2] Brace Spacing (ft.)	Brace [3] Reaction P (lbs)	Min. Brace Assembly E - Pages	Min. Brace Anchorage [6] Form Pour [4] Deck Page D1	Min. Brace Anchorage [6] Metal [5] Deck Page D2
				2-Way Transverse Brace Pattern (B19.20)					**4-Way T/L Details (B19.22)**				
3	10	192	1/2	36	587	C12AA04WS	N6	L6	65	1,070	C12AA06WS	N11	L11
4	10	262	5/8	38	860	C58AA06WS	N9	L9	56	1,255	C58AA06WS	N13	L13
5	10	418	5/8	29	1,035	C58AA06WS	N11	L11	33	1,185	C58AA06WS	N12	L12
6	10	779	5/8	18	1,215	C58AA06WS	N13	L13	20	1,365	C58AA06WS	N14	L14
				TRANSVERSE, LONGITUDINAL BRACING REQUIREMENTS (SELECT EITHER T/L OR SPLAY)									
				4-Way T/L Details (B19.22)					**4-Way Splay Details (B19.23)**				
3	10	192	1/2	36	587	C12AA04WS	N6	L6	36	587	C12AA04WS	N6	L6
4	10	262	5/8	38	860	C58AA06WS	N9	L9	38	860	C58AA06WS	N9	L9
5	10	418	5/8	29	1,035	C58AA06WS	N11	L11	29	1,035	C58AA06WS	N11	L11
6	10	779	5/8	16	1,066	C58AA06WS	N11	L11	16	1,066	C58AA06WS	N11	L11

1. TVL = DL + Fv + ($0.2S_{DS}$/1.4 x Wp). All Terms Are Working Loads.
2. Reductions In Actual Installed Brace Spacing Will Result In An Equal Percentage Reduction In Brace Reaction. As An Option When This Occurs ISAT May Substitute An Alternate Anchorage From Tables D1 or D2 Which Meets or Exceeds The Lowered Brace Reaction.
3. At Max. 30 Degree Brace Inclination.
4. Min. 3,000 psi NWC. Any "N Series" Connection May Be Utilized Having A Numeric Designation Equal To Or Higher Than That Shown.
5. Min. 3,000 psi NWC or LWC. Any "L Series" Connection May Be Utilized Having A Numeric Designation Equal To Or Higher Than That Shown.
6. As An Alternate, Brace Anchorage Connections To Structure May Be Employed Using Any Detail From Structural Connections Section "D" Series Details Where Assembly Design Value Meets Or Exceeds Brace Reaction.
7. For Trade Specific Bracing Installation Notes, Refer To Page7.1
8. Utilize Any "G" Series Vertical Support Connection Having A Design Value Equal To Or Greater Than The Corresponding "Rod Total Vertical Load".
9. Based on Conductor Filled Conduit Weight. Refer to X-Series Weight Charts.

REGISTERED PROFESSIONAL ENGINEER MARCIN WASAZNIK S-6612 STRUCTURAL STATE OF CALIFORNIA

ISAT
A Division of Tomarco Contractor Specialties

International Seismic Application Technology
14848 Northam Street, La Mirada, CA 90638
877-999-4728 (Toll Free) 714-523-0845 (Fax)
www.isatsb.com

Rev. 1
03/12/19
Page
C32-1-30

REVIEWED FOR CODE COMPLIANCE BY: OPM-0403 BY: William Staehlin DATE: 01-26-2024 CALIFORNIA BUILDING CODE 2022

CABLE BRACING REQUIREMENTS [7]:

SINGLE HUNG EMT CONDUIT [9] — **MAXIMUM SEISMIC DESIGN FORCE = 1.00 G's**

Requires Use of ISAT Seismic Brackets. Use of Any Non-ISAT Bracket Voids Engineering. — *2013 California Building Code Compliant*

Maximum Pipe Diameter (in.)	Max. Vertical Support Spacing (ft.)	Rod [1] Total Vertical Load (lbs)	Min. [8] Vertical Support Rod Dia. (in.)	TRANSVERSE BRACING REQUIREMENTS: Max. [2] Brace Spacing (ft.)	Brace [3] Reaction P (lbs)	Min. Brace Assembly E - Pages	Min. Brace Anchorage [6] Form Pour [4] Deck Page D1	Min. Brace Anchorage [6] Metal [5] Deck Page D2	LONGITUDINAL BRACING REQUIREMENTS: Max. [2] Brace Spacing (ft.)	Brace [3] Reaction P (lbs)	Min. Brace Assembly E - Pages	Min. Brace Anchorage [6] Form Pour [4] Deck Page D1	Min. Brace Anchorage [6] Metal [5] Deck Page D2
				2-Way Transverse Brace Pattern (B19.20)					**4-Way T/L Details (B19.22)**				
3	10	130	1/2	30	448	C12AA04WS	N5	L5	60	896	C12AA06WS	N9	L9
4	10	176	5/8	36	736	C58AA06WS	N8	L8	63	1,285	C58AA06WS	N13	L13
				TRANSVERSE, LONGITUDINAL BRACING REQUIREMENTS (SELECT EITHER T/L OR SPLAY)									
				4-Way T/L Details (B19.22)					**4-Way Splay Details (B19.23)**				
3	10	130	1/2	31	466	C12AA04WS	N5	L5	31	466	C12AA04WS	N5	L5
4	10	176	5/8	36	736	C58AA06WS	N8	L8	36	736	C58AA06WS	N8	L8

SINGLE HUNG RIGID METAL CONDUIT (RMC) [9] — **MAXIMUM SEISMIC DESIGN FORCE = 1.00 G's**

Maximum Pipe Diameter (in.)	Max. Vertical Support Spacing (ft.)	Rod [1] Total Vertical Load (lbs)	Min. [8] Vertical Support Rod Dia. (in.)	TRANSVERSE BRACING REQUIREMENTS: Max. [2] Brace Spacing (ft.)	Brace [3] Reaction P (lbs)	Min. Brace Assembly E - Pages	Min. Brace Anchorage [6] Form Pour [4] Deck Page D1	Min. Brace Anchorage [6] Metal [5] Deck Page D2	LONGITUDINAL BRACING REQUIREMENTS: Max. [2] Brace Spacing (ft.)	Brace [3] Reaction P (lbs)	Min. Brace Assembly E - Pages	Min. Brace Anchorage [6] Form Pour [4] Deck Page D1	Min. Brace Anchorage [6] Metal [5] Deck Page D2
				2-Way Transverse Brace Pattern (B19.20)					**4-Way T/L Details (B19.22)**				
3	10	192	1/2	20	443	C12AA04WS	N5	L5	40	886	C12AA06WS	N9	L9
4	10	262	5/8	20	605	C58AA04WS	N7	L7	40	1,210	C58AA06WS	N13	L13
5	10	418	5/8	14	674	C58AA06WS	N7	L7	28	1,348	C58AA06WS	N14	L14
6	10	779	5/8	10	898	C58AA06WS	N9	L9	20	1,795	C58DG06TS	N18	L18
				TRANSVERSE, LONGITUDINAL BRACING REQUIREMENTS (SELECT EITHER T/L OR SPLAY)									
				4-Way T/L Details (B19.22)					**4-Way Splay Details (B19.23)**				
3	10	192	1/2	36	791	C12AA06WS	N8	L8	36	791	C12AA06WS	N8	L8
4	10	262	5/8	38	1,155	C58AA06WS	N12	L12	38	1,155	C58AA06WS	N12	L12
5	10	418	5/8	28	1,345	C58AA06WS	N14	L14	28	1,345	C58AA06WS	N14	L14
6	10	779	5/8	15	1,346	C58AA06WS	N14	L14	15	1,346	C58AA06WS	N14	L14

1. TVL = DL + Fv + ($0.2S_{DS}$/1.4 x Wp). All Terms Are Working Loads.
2. Reductions In Actual Installed Brace Spacing Will Result In An Equal Percentage Reduction In Brace Reaction. As An Option When This Occurs ISAT May Substitute An Alternate Anchorage From Tables D1 or D2 Which Meets or Exceeds The Lowered Brace Reaction.
3. At Max. 50 Degree Brace Inclination.
4. Min. 3,000 psi NWC. Any "N Series" Connection May Be Utilized Having A Numeric Designation Equal To Or Higher Than That Shown.
5. Min. 3,000 psi NWC or LWC. Any "L Series" Connection May Be Utilized Having A Numeric Designation Equal To Or Higher Than That Shown.
6. As An Alternate, Brace Anchorage Connections To Structure May Be Employed Using Any Detail From Structural Connections Section "D" Series Details Where Assembly Design Value Meets Or Exceeds Brace Reaction.
7. For Trade Specific Bracing Installation Notes, Refer To Page7.1
8. Utilize Any "G" Series Vertical Support Connection Having A Design Value Equal To Or Greater Than The Corresponding "Rod Total Vertical Load".
9. Based on Conductor Filled Conduit Weight. Refer to X-Series Weight Charts.

REGISTERED PROFESSIONAL ENGINEER MARCIN WASAZNIK S-6612 STRUCTURAL STATE OF CALIFORNIA

ISAT
A Division of Tomarco Contractor Specialties

International Seismic Application Technology
14848 Northam Street, La Mirada, CA 90638
877-999-4728 (Toll Free) 714-523-0845 (Fax)
www.isatsb.com

Rev. 1
03/12/19
Page
C32-1-45

REVIEWED FOR CODE COMPLIANCE BY: OPM-0403 William Staehlin DATE: 01-26-2024 CALIFORNIA BUILDING CODE 2022

CABLE BRACING REQUIREMENTS [7:]

SINGLE HUNG EMT CONDUIT [9] — **MAXIMUM SEISMIC DESIGN FORCE = 1.00 G's**

Requires Use of ISAT Seismic Brackets. Use of Any Non-ISAT Bracket Voids Engineering. — *2013 California Building Code Compliant*

Maximum Pipe Diameter (in.)	Max. Vertical Support Spacing (ft.)	Rod [1] Total Vertical Load (lbs)	Min. [8] Vertical Support Rod Dia. (in.)	TRANSVERSE BRACING REQUIREMENTS: Max. [2] Brace Spacing (ft.)	Brace [3] Reaction P (lbs)	Min. Brace Assembly E - Pages	Min. Brace Anchorage [6] Form Pour [4] Deck Page D1	Min. Brace Anchorage [6] Metal [5] Deck Page D2	LONGITUDINAL BRACING REQUIREMENTS: Max. [2] Brace Spacing (ft.)	Brace [3] Reaction P (lbs)	Min. Brace Assembly E - Pages	Min. Brace Anchorage [6] Form Pour [4] Deck Page D1	Min. Brace Anchorage [6] Metal [5] Deck Page D2
				2-Way Transverse Brace Pattern (B19.20)					**4-Way T/L Details (B19.22)**				
3	10	130	1/2	20	384	C12AA04WS	N4	L4	40	768	C12AA06WS	N8	L8
4	10	176	5/8	22	575	C58AA04WS	N6	L6	44	1,150	C58AA06WS	N12	L12
				TRANSVERSE, LONGITUDINAL BRACING REQUIREMENTS (SELECT EITHER T/L OR SPLAY)									
				4-Way T/L Details (B19.22)					**4-Way Splay Details (B19.23)**				
3	10	130	1/2	31	599	C12AA04WS	N6	L6	31	599	C12AA04WS	N6	L6
4	10	176	5/8	36	947	C58AA06WS	N10	L10	36	947	C58AA06WS	N10	L10

SINGLE HUNG RIGID METAL CONDUIT (RMC) [9] — **MAXIMUM SEISMIC DESIGN FORCE = 1.00 G's**

Maximum Pipe Diameter (in.)	Max. Vertical Support Spacing (ft.)	Rod [1] Total Vertical Load (lbs)	Min. [8] Vertical Support Rod Dia. (in.)	TRANSVERSE BRACING REQUIREMENTS: Max. [2] Brace Spacing (ft.)	Brace [3] Reaction P (lbs)	Min. Brace Assembly E - Pages	Min. Brace Anchorage [6] Form Pour [4] Deck Page D1	Min. Brace Anchorage [6] Metal [5] Deck Page D2	LONGITUDINAL BRACING REQUIREMENTS: Max. [2] Brace Spacing (ft.)	Brace [3] Reaction P (lbs)	Min. Brace Assembly E - Pages	Min. Brace Anchorage [6] Form Pour [4] Deck Page D1	Min. Brace Anchorage [6] Metal [5] Deck Page D2
				2-Way Transverse Brace Pattern (B19.20)					**4-Way T/L Details (B19.22)**				
3	10	192	1/2	14	399	C12AA04WS	N4	L4	28	797	C12AA06WS	N8	L8
4	10	262	5/8	14	544	C58AA04WS	N6	L6	28	1,089	C58AA06WS	N11	L11
				TRANSVERSE, LONGITUDINAL BRACING REQUIREMENTS (SELECT EITHER T/L OR SPLAY)									
				4-Way T/L Details (B19.22)					**4-Way Splay Details (B19.23)**				
3	10	192	1/2	29	826	C12AA06WS	N9	L9	29	826	C12AA06WS	N9	L9
4	10	262	5/8	30	1,166	C58AA06WS	N12	L12	30	1,166	C58AA06WS	N12	L12
5	10	418	5/8	18	1,114	C58AA06WS	N12	L12	18	1,114	C58AA06WS	N12	L12
6	10	779	5/8	10	1,154	C58AA06WS	N12	L12	10	1,154	C58AA06WS	N12	L12

1. TVL = DL + Fv + ($0.2S_{DS}$/1.4 x Wp). All Terms Are Working Loads.
2. Reductions In Actual Installed Brace Spacing Will Result In An Equal Percentage Reduction In Brace Reaction. As An Option When This Occurs ISAT May Substitute An Alternate Anchorage From Tables D1 or D2 Which Meets or Exceeds The Lowered Brace Reaction.
3. At Max. 60 Degree Brace Inclination.
4. Min. 3,000 psi NWC. Any "N Series" Connection May Be Utilized Having A Numeric Designation Equal To Or Higher Than That Shown.
5. Min. 3,000 psi NWC or LWC. Any "L Series" Connection May Be Utilized Having A Numeric Designation Equal To Or Higher Than That Shown.
6. As An Alternate, Brace Anchorage Connections To Structure May Be Employed Using Any Detail From Structural Connections Section "D" Series Details Where Assembly Design Value Meets Or Exceeds Brace Reaction.
7. For Trade Specific Bracing Installation Notes, Refer To Page7.1
8. Utilize Any "G" Series Vertical Support Connection Having A Design Value Equal To Or Greater Than The Corresponding "Rod Total Vertical Load".
9. Based on Conductor Filled Conduit Weight. Refer to X-Series Weight Charts.

REGISTERED PROFESSIONAL ENGINEER MARCIN WASAZNIK S 6612 STRUCTURAL STATE OF CALIFORNIA

ISAT
A Division of Tomarco Contractor Specialties

International Seismic Application Technology
14848 Northam Street, La Mirada, CA 90638
877-999-4728 (Toll Free) 714-523-0845 (Fax)
www.isatsb.com

Rev. 1
03/12/19
Page
C32-1-60

REVIEWED FOR CODE COMPLIANCE BY ISAT
OPM-0403
Reviewed by William Staehlin
DATE: 01-26-2024
CALIFORNIA BUILDING CODE 2022

RIGID BRACING REQUIREMENTS [7]

TRAPEZE MOUNTED ELECTRICAL SYSTEMS (Conduit, Cable Tray, Bus Duct, Bus Way) — **MAXIMUM SEISMIC DESIGN FORCE = 0.25 G's**

Requires Use of ISAT Seismic Brackets. Use of Any Non-ISAT Bracket Voids Engineering. — *2013 California Building Code Compliant*

Maximum Trapeze Load (lbs/lf)	Max. Vertical Support Spacing (ft.)	Rod [1] Total Vertical Load (lbs)	Min. [8] Vertical Support Rod Dia. (in.)	TRANSVERSE BRACING REQUIREMENTS					LONGITUDINAL BRACING REQUIREMENTS				
				Max. [2] Brace Spacing (ft.)	Brace [3] Reaction P (lbs)	Min. Brace Assembly E - Pages	Min. Brace Anchorage [6] Form Pour [4] Deck Page D1	Min. Brace Anchorage [6] Metal [5] Deck Page D2	Max. [2] Brace Spacing (ft.)	Brace [3] Reaction P (lbs)	Min. Brace Assembly E - Pages	Min. Brace Anchorage [6] Form Pour [4] Deck Page D1	Min. Brace Anchorage [6] Metal [5] Deck Page D2
				1-Way Transverse Brace Pattern (B20.0, B41.0, B45.0)					3-Way Transverse, Longitudinal Brace Pattern (B20.2, B41.2, B45.2)				
11.0	10	201	3/8	40	127	R38AAEM306	N2	L2	80	165	R38AAEM306	N2	L2
25.0	10	456	1/2	40	289	R12AAEM306	N3	L3	80	375	R12AAEM406	N4	L4
35.0	10	639	1/2	40	404	R12AAEM406	N5	L5	80	525	R12AAEM406	N6	L6
50.0	10	912	1/2	40	577	R12AAEM406	N6	L6	80	751	R12AAEM509	N8	L8
65.0	10	1,186	1/2	40	751	R12AAEM509	N8	L8	80	976	R12AAEM506	N10	L10
75.0	10	1,368	1/2	40	866	R12AAEM506	N9	L9	80	1,126	R12AAEM506	N12	L12
				TRANSVERSE, LONGITUDINAL BRACING REQUIREMENTS									
				2-Way, 4-Way Transverse, Longitudinal Brace Pattern (B20.1, B20.3, B41.1, B41.3, B45.1 B45.3)									
100.0	10	1,351	1/2	40	751	R12AAEM509	N8	L8					
125.0	10	1,689	1/2	40	938	R12AAEM506	N10	L10					
150.0	10	2,026	1/2	40	1,126	R12AAEM506	N12	L12					
175.0	10	2,364	1/2	40	1,313	R12AAEM506	N14	L14					
200.0	10	2,655	5/8	38	1,426	R58AAEM506	N15	L15					
225.0	10	2,880	5/8	34	1,435	R58AAEM506	N15	L15					

1. TVL = DL + Fv + ($0.2S_D$ x 0.70 x Wp). All Terms Are Working Loads, Based On Eccentric Loading, 65% Of Total Load Allocated Per Rod.
2. Reductions In Actual Installed Brace Spacing Will Result In An Equal Percentage Reduction In Brace Reaction. As An Option When This Occurs ISAT May Substitute An Alternate Anchorage From Tables D1 or D2 Which Meets or Exceeds The Lowered Brace Reaction.
3. At Max. 30 Degree Brace Inclination.
4. Min. 3,000 psi NWC. Any "N Series" Connection May Be Utilized Having A Numeric Designation Equal To Or Higher Than That Shown.
5. Min. 3,000 psi NWC or LWC. Any "L Series" Connection May Be Utilized Having A Numeric Designation Equal To Or Higher Than That Shown.
6. As An Alternate, Brace Anchorage Connections To Structure May Be Employed Using Any Detail From Structural Connections Section "D" Series Details Where Assembly Design Value Meets Or Exceeds Brace Reaction.
7. For Trade Specific Bracing Installation Notes, Refer To Page 7.1.
8. Utilize Any "G" Series Vertical Support Connection Having A Design Value Equal To Or Greater Than The Corresponding "Rod Total Vertical Load".

REVIEWED FOR CODE COMPLIANCE
OPM-0403
By: William Staehlin
DATE: 01-26-2024
CALIFORNIA BUILDING CODE 2019

REGISTERED PROFESSIONAL ENGINEER MARCIN WASAZNIK S 6612 STRUCTURAL STATE OF CALIFORNIA

ISAT
A Division of Tomarco Contractor Specialties
International Seismic Application Technology
14848 Northam Street, La Mirada, CA 90638
877-999-4728 (Toll Free) 714-523-0845 (Fax)
www.isatsb.com

Rev. 1
11/19/2019
Page
C33-0.25-30

RIGID BRACING REQUIREMENTS [7]

TRAPEZE MOUNTED ELECTRICAL SYSTEMS (Conduit, Cable Tray, Bus Duct, Bus Way) — **MAXIMUM SEISMIC DESIGN FORCE = 0.25 G's**

Requires Use of ISAT Seismic Brackets. Use of Any Non-ISAT Bracket Voids Engineering. — *2013 California Building Code Compliant*

Maximum Trapeze Load (lbs/lf)	Max. Vertical Support Spacing (ft.)	Rod [1] Total Vertical Load (lbs)	Min. [8] Vertical Support Rod Dia. (in.)	TRANSVERSE BRACING REQUIREMENTS					LONGITUDINAL BRACING REQUIREMENTS				
				Max. [2] Brace Spacing (ft.)	Brace [3] Reaction P (lbs)	Min. Brace Assembly E - Pages	Min. Brace Anchorage [6] Form Pour [4] Deck Page D1	Min. Brace Anchorage [6] Metal [5] Deck Page D2	Max. [2] Brace Spacing (ft.)	Brace [3] Reaction P (lbs)	Min. Brace Assembly E - Pages	Min. Brace Anchorage [6] Form Pour [4] Deck Page D1	Min. Brace Anchorage [6] Metal [5] Deck Page D2
				1-Way Transverse Brace Pattern (B20.0, B41.0, B45.0)					3-Way Transverse, Longitudinal Brace Pattern (B20.2, B41.2, B45.2)				
11.0	10	312	3/8	40	171	R38AAEM306	N2	L2	80	222	R38AAEM306	N3	L3
25.0	10	708	1/2	40	389	R12AAEM406	N4	L4	80	506	R12AAEM406	N6	L6
35.0	10	991	1/2	40	545	R12AAEM406	N6	L6	80	708	R12AAEM509	N8	L8
50.0	10	1,416	1/2	40	778	R12AAEM509	N8	L8	80	1,011	R12AAEM506	N11	L11
65.0	10	1,841	5/8	40	1,011	R58AAEM506	N11	L11	80	1,315	R58AAEM506	N14	L14
75.0	10	2,124	3/4	40	1,167	R34CFB1P06	N12	L12	80	1,517	R34CFB2P12	N16	L16
100.0	10	2,832	3/4	40	1,556	R34CFB2P12	N16	L16	80	2,022	R34DGB2P09	N21	L21
				TRANSVERSE, LONGITUDINAL BRACING REQUIREMENTS									
				2-Way, 4-Way Transverse, Longitudinal Brace Pattern (B20.1, B20.3, B41.1, B41.3, B45.1 B45.3)									
125.0	10	2,319	5/8	40	1,264	R58AAEM506	N13	L13					
150.0	10	2,782	5/8	40	1,517	R58AAEM606	N16	L16					
175.0	10	3,246	3/4	40	1,770	R34DGB2P09	N18	L18					
200.0	10	3,710	3/4	40	2,022	R34DGB2P09	N21	L21					
225.0	10	4,063	3/4	38	2,161	R34DGB2P09	N22	L22					

1. TVL = DL + Fv + ($0.2S_D$ x 0.70 x Wp). All Terms Are Working Loads, Based On Eccentric Loading, 65% Of Total Load Allocated Per Rod.
2. Reductions In Actual Installed Brace Spacing Will Result In An Equal Percentage Reduction In Brace Reaction. As An Option When This Occurs ISAT May Substitute An Alternate Anchorage From Tables D1 or D2 Which Meets or Exceeds The Lowered Brace Reaction.
3. At Max. 50 Degree Brace Inclination.
4. Min. 3,000 psi NWC. Any "N Series" Connection May Be Utilized Having A Numeric Designation Equal To Or Higher Than That Shown.
5. Min. 3,000 psi NWC or LWC. Any "L Series" Connection May Be Utilized Having A Numeric Designation Equal To Or Higher Than That Shown.
6. As An Alternate, Brace Anchorage Connections To Structure May Be Employed Using Any Detail From Structural Connections Section "D" Series Details Where Assembly Design Value Meets Or Exceeds Brace Reaction.
7. For Trade Specific Bracing Installation Notes, Refer To Page 7.1.
8. Utilize Any "G" Series Vertical Support Connection Having A Design Value Equal To Or Greater Than The Corresponding "Rod Total Vertical Load".

REVIEWED FOR CODE COMPLIANCE
OPM-0403
By: William Staehlin
UPDATE: 01-26-2024
CALIFORNIA BUILDING CODE 2019

REGISTERED PROFESSIONAL ENGINEER MARCIN WASAZNIK S 6612 STRUCTURAL STATE OF CALIFORNIA

ISAT
A Division of Tomarco Contractor Specialties
International Seismic Application Technology
14848 Northam Street, La Mirada, CA 90638
877-999-4728 (Toll Free) 714-523-0845 (Fax)
www.isatsb.com

Rev. 0
8/03/18
Page
C33-0.25-45

RIGID BRACING REQUIREMENTS [7]

TRAPEZE MOUNTED ELECTRICAL SYSTEMS (Conduit, Cable Tray, Bus Duct, Bus Way) — **MAXIMUM SEISMIC DESIGN FORCE = 0.25 G's**

Requires Use of ISAT Seismic Brackets. Use of Any Non-ISAT Bracket Voids Engineering. — *2013 California Building Code Compliant*

Maximum Trapeze Load (lbs/lf)	Max. Vertical Support Spacing (ft.)	Rod [1] Total Vertical Load (lbs)	Min. [8] Vertical Support Rod Dia. (in.)	TRANSVERSE BRACING REQUIREMENTS: Max. [2] Brace Spacing (ft.)	Brace [3] Reaction P (lbs)	Min. Brace Assembly E - Pages	Min. Brace Anchorage [6]: Form Pour [4] Deck Page D1	Metal [5] Deck Page D2	LONGITUDINAL BRACING REQUIREMENTS: Max. [2] Brace Spacing (ft.)	Brace [3] Reaction P (lbs)	Min. Brace Assembly E - Pages	Min. Brace Anchorage [6]: Form Pour [4] Deck Page D1	Metal [5] Deck Page D2
				1-Way Transverse Brace Pattern (B20.0, B41.0, B45.0)					3-Way Transverse, Longitudinal Brace Pattern (B20.2, B41.2, B45.2)				
11.0	10	409	3/8	40	220	R38AAEM306	N3	L3	80	286	R38AAEM306	N3	L3
25.0	10	930	1/2	40	500	R12AAEM406	N5	L5	80	650	R12AAEM406	N7	L7
35.0	10	1,301	1/2	40	700	R12AAEM509	N7	L7	80	910	R12AAEM506	N10	L10
50.0	10	1,859	5/8	40	1,000	R58AAEM506	N10	L10	80	1,300	R58AAEM506	N13	L13
				TRANSVERSE, LONGITUDINAL BRACING REQUIREMENTS									
				2-Way, 4-Way Transverse, Longitudinal Brace Pattern (B20.1, B20.3, B41.1, B41.3, B45.1 B45.3)									
65.0	10	1,494	1/2	40	845	R12AAEM506	N9	L9					
75.0	10	1,723	5/8	40	975	R58AAEM506	N10	L10					
100.0	10	2,298	5/8	40	1,300	R58AAEM506	N13	L13					
125.0	10	2,606	3/4	34	1,381	R34DGB1S06	N14	L14					
150.0	10	2,808	5/8	28	1,365	R58AAEM506	N14	L14					
175.0	10	3,027	5/8	24	1,365	R58AAEM506	N14	L14					
200.0	10	3,246	5/8	21	1,365	R58AAEM506	N14	L14					
225.0	10	3,492	5/8	19	1,389	R58AAEM506	N14	L14					

1. TVL = DL + Fv + ($0.2S_D$ x 0.70 x Wp). All Terms Are Working Loads. Based On Eccentric Loading, 65% Of Total Load Allocated Per Rod.
2. Reductions In Actual Installed Brace Spacing Will Result In An Equal Percentage Reduction In Brace Reaction. As An Option When This Occurs ISAT May Substitute An Alternate Anchorage From Tables D1 or D2 Which Meets or Exceeds The Lowered Brace Reaction.
3. At Max. 60 Degree Brace Inclination.
4. Min. 3,000 psi NWC. Any "N Series" Connection May Be Utilized Having A Numeric Designation Equal To Or Higher Than That Shown.
5. Min. 3,000 psi NWC or LWC. Any "L Series" Connection May Be Utilized Having A Numeric Designation Equal To Or Higher Than That Shown.
6. As An Alternate, Brace Anchorage Connections To Structure May Be Employed Using Any Detail From Structural Connections Section "D" Series Details Where Assembly Design Value Meets Or Exceeds Brace Reaction.
7. For Trade Specific Bracing Installation Notes, Refer To Page 7.1.
8. Utilize Any "G" Series Vertical Support Connection Having A Design Value Equal To Or Greater Than The Corresponding "Rod Total Vertical Load".

REVIEWED FOR CODE COMPLIANCE
OPM-0403
BY: William Staehlin
DATE: 01-26-2024
CALIFORNIA BUILDING CODE 2022

REGISTERED PROFESSIONAL ENGINEER
MARCIN WASAZNIK
S 6612
STRUCTURAL
STATE OF CALIFORNIA

ISAT
A Division of Tomarco Contractor Specialties
International Seismic Application Technology
14848 Northam Street, La Mirada, CA 90638
877-999-4728 (Toll Free) 714-523-0845 (Fax)
www.isatsb.com

Rev. 0
8/03/18
Page
C33-0.25-60

RIGID BRACING REQUIREMENTS [7]

TRAPEZE MOUNTED ELECTRICAL SYSTEMS (Conduit, Cable Tray, Bus Duct, Bus Way) — **MAXIMUM SEISMIC DESIGN FORCE = 0.50 G's**

Requires Use of ISAT Seismic Brackets. Use of Any Non-ISAT Bracket Voids Engineering. — *2013 California Building Code Compliant*

Maximum Trapeze Load (lbs/lf)	Max. Vertical Support Spacing (ft.)	Rod [1] Total Vertical Load (lbs)	Min. [8] Vertical Support Rod Dia. (in.)	TRANSVERSE BRACING REQUIREMENTS					LONGITUDINAL BRACING REQUIREMENTS				
				Max. [2] Brace Spacing (ft.)	Brace [3] Reaction P (lbs)	Min. Brace Assembly E - Pages	Min. Brace Anchorage [6] Form Pour [4] Deck Page D1	Min. Brace Anchorage [6] Metal [5] Deck Page D2	Max. [2] Brace Spacing (ft.)	Brace [3] Reaction P (lbs)	Min. Brace Assembly E - Pages	Min. Brace Anchorage [6] Form Pour [4] Deck Page D1	Min. Brace Anchorage [6] Metal [5] Deck Page D2
				1-Way Transverse Brace Pattern (B20.0, B41.0, B45.0)					3-Way Transverse, Longitudinal Brace Pattern (B20.2, B41.2, B45.2)				
11.0	10	305	3/8	40	254	R38AAEM306	N3	L3	80	330	R38AAEM406	N4	L4
25.0	10	693	1/2	40	577	R12AAEM406	N6	L6	80	751	R12AAEM509	N8	L8
35.0	10	970	1/2	40	808	R12AAEM506	N9	L9	80	1,051	R12AAEM506	N11	L11
				TRANSVERSE, LONGITUDINAL BRACING REQUIREMENTS									
				2-Way, 4-Way Transverse, Longitudinal Brace Pattern (B20.1, B20.3, B41.1, B41.3, B45.1 B45.3)									
50.0	10	912	1/2	40	751	R12AAEM509	N8	L8					
65.0	10	1,186	1/2	40	976	R12AAEM506	N10	L10					
75.0	10	1,368	1/2	40	1,126	R12AAEM506	N12	L12					
100.0	10	1,777	1/2	38	1,426	R12AAEM506	N15	L15					
125.0	10	1,985	1/2	30	1,407	R12AAEM506	N15	L15					
150.0	10	2,204	1/2	25	1,407	R12AAEM506	N15	L15					
175.0	10	2,447	1/2	22	1,445	R12AAEM506	N15	L15					
200.0	10	2,655	5/8	19	1,426	R58AAEM506	N15	L15					
225.0	10	2,880	5/8	17	1,435	R58AAEM506	N15	L15					

1. TVL = DL + Fv + ($0.2S_D$ x 0.70 x Wp). All Terms Are Working Loads, Based On Eccentric Loading, 65% Of Total Load Allocated Per Rod.
2. Reductions In Actual Installed Brace Spacing Will Result In An Equal Percentage Reduction In Brace Reaction. As An Option When This Occurs ISAT May Substitute An Alternate Anchorage From Tables D1 or D2 Which Meets or Exceeds The Lowered Brace Reaction.
3. At Max. 30 Degree Brace Inclination.
4. Min. 3,000 psi NWC. Any "N Series" Connection May Be Utilized Having A Numeric Designation Equal To Or Higher Than That Shown.
5. Min. 3,000 psi NWC or LWC. Any "L Series" Connection May Be Utilized Having A Numeric Designation Equal To Or Higher Than That Shown.
6. As An Alternate, Brace Anchorage Connections To Structure May Be Employed Using Any Detail From Structural Connections Section "D" Series Details Where Assembly Design Value Meets Or Exceeds Brace Reaction.
7. For Trade Specific Bracing Installation Notes, Refer To Page 7.1.
8. Utilize Any "G" Series Vertical Support Connection Having A Design Value Equal To Or Greater Than The Corresponding "Rod Total Vertical Load".

REVIEWED FOR CODE COMPLIANCE
OPM-0403
Eng. William Staehlin
UPDATE: 01-26-2024
CALIFORNIA BUILDING CODE 2019

REGISTERED PROFESSIONAL ENGINEER MARCIN WASAZNIK S 6612 STRUCTURAL STATE OF CALIFORNIA

ISAT
A Division of Tomarco Contractor Specialties
International Seismic Application Technology
14848 Northam Street, La Mirada, CA 90638
877-999-4728 (Toll Free) 714-523-0845 (Fax)
www.isatsb.com

Rev. 1
11/19/2019
Page
C33-0.5-30

RIGID BRACING REQUIREMENTS [7]

TRAPEZE MOUNTED ELECTRICAL SYSTEMS (Conduit, Cable Tray, Bus Duct, Bus Way) — **MAXIMUM SEISMIC DESIGN FORCE = 0.50 G's**

Requires Use of ISAT Seismic Brackets. Use of Any Non-ISAT Bracket Voids Engineering. — *2013 California Building Code Compliant*

Maximum Trapeze Load (lbs/lf)	Max. Vertical Support Spacing (ft.)	Rod [1] Total Vertical Load (lbs)	Min. [8] Vertical Support Rod Dia. (in.)	TRANSVERSE BRACING REQUIREMENTS					LONGITUDINAL BRACING REQUIREMENTS				
				Max. [2] Brace Spacing (ft.)	Brace [3] Reaction P (lbs)	Min. Brace Assembly E - Pages	Min. Brace Anchorage [6] Form Pour [4] Deck Page D1	Min. Brace Anchorage [6] Metal [5] Deck Page D2	Max. [2] Brace Spacing (ft.)	Brace [3] Reaction P (lbs)	Min. Brace Assembly E - Pages	Min. Brace Anchorage [6] Form Pour [4] Deck Page D1	Min. Brace Anchorage [6] Metal [5] Deck Page D2
				1-Way Transverse Brace Pattern (B20.0, B41.0, B45.0)					3-Way Transverse, Longitudinal Brace Pattern (B20.2, B41.2, B45.2)				
11.0	10	527	1/2	40	342	R12AAEM406	N4	L4	80	445	R12AAEM406	N5	L5
25.0	10	1,197	1/2	40	778	R12AAEM509	N8	L8	80	1,011	R12AAEM506	N11	L11
35.0	10	1,675	5/8	40	1,089	R58AAEM506	N11	L11	80	1,416	R58AAEM506	N15	L15
				TRANSVERSE, LONGITUDINAL BRACING REQUIREMENTS									
				2-Way, 4-Way Transverse, Longitudinal Brace Pattern (B20.1, B20.3, B41.1, B41.3, B45.1 B45.3)									
50.0	10	1,416	1/2	40	1,011	R12AAEM506	N11	L11					
65.0	10	1,841	5/8	40	1,315	R58AAEM506	N14	L14					
75.0	10	2,124	3/4	40	1,517	R34CFB2P12	N16	L16					
100.0	10	2,832	3/4	40	2,022	R34DGB2P09	N21	L21					
125.0	10	3,051	3/4	32	2,022	R34DGB2P09	N21	L21					
150.0	10	3,295	3/4	27	2,048	R34DGB2P09	N21	L21					
175.0	10	3,502	3/4	23	2,035	R34DGB2P09	N21	L21					
200.0	10	3,807	3/4	21	2,124	R34DGB2P09	N22	L22					
225.0	10	4,063	3/4	19	2,161	R34DGB2P09	N22	L22					

1. TVL = DL + Fv + ($0.2S_D$ x 0.70 x Wp). All Terms Are Working Loads, Based On Eccentric Loading, 65% Of Total Load Allocated Per Rod.
2. Reductions In Actual Installed Brace Spacing Will Result In An Equal Percentage Reduction In Brace Reaction. As An Option When This Occurs ISAT May Substitute An Alternate Anchorage From Tables D1 or D2 Which Meets or Exceeds The Lowered Brace Reaction.
3. At Max. 50 Degree Brace Inclination.
4. Min. 3,000 psi NWC. Any "N Series" Connection May Be Utilized Having A Numeric Designation Equal To Or Higher Than That Shown.
5. Min. 3,000 psi NWC or LWC. Any "L Series" Connection May Be Utilized Having A Numeric Designation Equal To Or Higher Than That Shown.
6. As An Alternate, Brace Anchorage Connections To Structure May Be Employed Using Any Detail From Structural Connections Section "D" Series Details Where Assembly Design Value Meets Or Exceeds Brace Reaction.
7. For Trade Specific Bracing Installation Notes, Refer To Page 7.1.
8. Utilize Any "G" Series Vertical Support Connection Having A Design Value Equal To Or Greater Than The Corresponding "Rod Total Vertical Load".

REVIEWED FOR CODE COMPLIANCE
OPM-0403
By: William Staehlin
DATE: 01-26-2024
CALIFORNIA BUILDING CODE 2019

REGISTERED PROFESSIONAL ENGINEER
MARCIN WASAZNIK
S 6612
STRUCTURAL
STATE OF CALIFORNIA

ISAT
A Division of Tomarco Contractor Specialties

International Seismic Application Technology
14848 Northam Street, La Mirada, CA 90638
877-999-4728 (Toll Free) 714-523-0845 (Fax)
www.isatsb.com

Rev. 0
8/03/18
Page
C33-0.5-45

RIGID BRACING REQUIREMENTS [7]

TRAPEZE MOUNTED ELECTRICAL SYSTEMS (Conduit, Cable Tray, Bus Duct, Bus Way) — **MAXIMUM SEISMIC DESIGN FORCE = 0.50 G's**

Requires Use of ISAT Seismic Brackets. Use of Any Non-ISAT Bracket Voids Engineering. — *2013 California Building Code Compliant*

Maximum Trapeze Load (lbs/lf)	Max. Vertical Support Spacing (ft.)	Rod [1] Total Vertical Load (lbs)	Min. [8] Vertical Support Rod Dia. (in.)	TRANSVERSE BRACING REQUIREMENTS					LONGITUDINAL BRACING REQUIREMENTS				
				Max. [2] Brace Spacing (ft.)	Brace [3] Reaction P (lbs)	Min. Brace Assembly E - Pages	Min. Brace Anchorage [6] Form Pour [4] Deck Page D1	Min. Brace Anchorage [6] Metal [5] Deck Page D2	Max. [2] Brace Spacing (ft.)	Brace [3] Reaction P (lbs)	Min. Brace Assembly E - Pages	Min. Brace Anchorage [6] Form Pour [4] Deck Page D1	Min. Brace Anchorage [6] Metal [5] Deck Page D2
				1-Way Transverse Brace Pattern (B20.0, B41.0, B45.0)					3-Way Transverse, Longitudinal Brace Pattern (B20.2, B41.2, B45.2)				
11.0	10	721	1/2	40	440	R12AAEM406	N5	L5	80	572	R12AAEM406	N6	L6
25.0	10	1,640	3/4	40	1,000	R34DGB1P06	N10	L10	80	1,300	R34DGB1S06	N13	L13
				TRANSVERSE, LONGITUDINAL BRACING REQUIREMENTS									
				2-Way, 4-Way Transverse, Longitudinal Brace Pattern (B20.1, B20.3, B41.1, B41.3, B45.1 B45.3)									
35.0	10	1,301	1/2	40	910	R12AAEM506	N10	L10					
50.0	10	1,859	5/8	40	1,300	R58AAEM506	N13	L13					
65.0	10	2,048	3/4	32	1,352	R34DGB1S06	N14	L14					
75.0	10	2,150	3/4	28	1,365	R34DGB1S06	N14	L14					
100.0	10	2,369	3/4	21	1,365	R34DGB1S06	N14	L14					
125.0	10	2,606	3/4	17	1,381	R34DGB1S06	N14	L14					
150.0	10	2,808	5/8	14	1,365	R58AAEM506	N14	L14					
175.0	10	3,027	5/8	12	1,365	R58AAEM506	N14	L14					
200.0	10	3,175	5/8	10	1,300	R58AAEM506	N13	L13					

1. TVL = DL + Fv + ($0.2S_D$ x 0.70 x Wp). All Terms Are Working Loads. Based On Eccentric Loading, 65% Of Total Load Allocated Per Rod.
2. Reductions In Actual Installed Brace Spacing Will Result In An Equal Percentage Reduction In Brace Reaction. As An Option When This Occurs ISAT May Substitute An Alternate Anchorage From Tables D1 or D2 Which Meets or Exceeds The Lowered Brace Reaction.
3. At Max. 60 Degree Brace Inclination.
4. Min. 3,000 psi NWC. Any "N Series" Connection May Be Utilized Having A Numeric Designation Equal To Or Higher Than That Shown.
5. Min. 3,000 psi NWC or LWC. Any "L Series" Connection May Be Utilized Having A Numeric Designation Equal To Or Higher Than That Shown.
6. As An Alternate, Brace Anchorage Connections To Structure May Be Employed Using Any Detail From Structural Connections Section "D" Series Details Where Assembly Design Value Meets Or Exceeds Brace Reaction.
7. For Trade Specific Bracing Installation Notes, Refer To Page 7.1.
8. Utilize Any "G" Series Vertical Support Connection Having A Design Value Equal To Or Greater Than The Corresponding "Rod Total Vertical Load".

REVIEWED FOR CODE COMPLIANCE
OPM-0403
By William Staehlin
DATE: 01-26-2024
CALIFORNIA BUILDING CODE 2022

REGISTERED PROFESSIONAL ENGINEER MARCIN WASAZNIK S-6612 STRUCTURAL STATE OF CALIFORNIA

ISAT
A Division of Tomarco Contractor Specialties
International Seismic Application Technology
14848 Northam Street, La Mirada, CA 90638
877-999-4728 (Toll Free) 714-523-0845 (Fax)
www.isatsb.com

Rev. 0
8/03/18
Page
C33-0.5-60

RIGID BRACING REQUIREMENTS [7]

TRAPEZE MOUNTED ELECTRICAL SYSTEMS (Conduit, Cable Tray, Bus Duct, Bus Way) — **MAXIMUM SEISMIC DESIGN FORCE = 0.75 G's**

Requires Use of ISAT Seismic Brackets. Use of Any Non-ISAT Bracket Voids Engineering. — *2013 California Building Code Compliant*

Maximum Trapeze Load (lbs/lf)	Max. Vertical Support Spacing (ft.)	Rod [1] Total Vertical Load (lbs)	Min. [8] Vertical Support Rod Dia. (in.)	TRANSVERSE BRACING REQUIREMENTS					LONGITUDINAL BRACING REQUIREMENTS				
				Max. [2] Brace Spacing (ft.)	Brace [3] Reaction P (lbs)	Min. Brace Assembly E - Pages	Min. Brace Anchorage [6] Form Pour [4] Deck Page D1	Min. Brace Anchorage [6] Metal [5] Deck Page D2	Max. [2] Brace Spacing (ft.)	Brace [3] Reaction P (lbs)	Min. Brace Assembly E - Pages	Min. Brace Anchorage [6] Form Pour [4] Deck Page D1	Min. Brace Anchorage [6] Metal [5] Deck Page D2
				1-Way Transverse Brace Pattern (B20.0, B41.0, B45.0)					3-Way Transverse, Longitudinal Brace Pattern (B20.2, B41.2, B45.2)				
11.0	10	409	3/8	40	381	R38AAEM406	N4	L4	80	495	R38AAEM406	N5	L5
25.0	10	930	1/2	40	866	R12AAEM506	N9	L9	80	1,126	R12AAEM506	N12	L12
				TRANSVERSE, LONGITUDINAL BRACING REQUIREMENTS									
				2-Way, 4-Way Transverse, Longitudinal Brace Pattern (B20.1, B20.3, B41.1, B41.3, B45.1 B45.3)									
35.0	10	804	1/2	40	788	R12AAEM509	N8	L8					
50.0	10	1,149	1/2	40	1,126	R12AAEM506	N12	L12					
65.0	10	1,471	1/2	39	1,427	R12AAEM506	N15	L15					
75.0	10	1,564	1/2	34	1,435	R12AAEM506	N15	L15					
100.0	10	1,765	1/2	25	1,407	R12AAEM506	N15	L15					
125.0	10	1,985	1/2	20	1,407	R12AAEM506	N15	L15					
150.0	10	2,222	1/2	17	1,435	R12AAEM506	N15	L15					
175.0	10	2,406	1/2	14	1,379	R12AAEM506	N14	L14					
200.0	10	2,607	5/8	12	1,351	R58AAEM506	N14	L14					

1. TVL = DL + Fv + ($0.2S_D$ x 0.70 x Wp). All Terms Are Working Loads. Based On Eccentric Loading, 65% Of Total Load Allocated Per Rod.
2. Reductions In Actual Installed Brace Spacing Will Result In An Equal Percentage Reduction In Brace Reaction. As An Option When This Occurs ISAT May Substitute An Alternate Anchorage From Tables D1 or D2 Which Meets or Exceeds The Lowered Brace Reaction.
3. At Max. 30 Degree Brace Inclination.
4. Min. 3,000 psi NWC. Any "N Series" Connection May Be Utilized Having A Numeric Designation Equal To Or Higher Than That Shown.
5. Min. 3,000 psi NWC or LWC. Any "L Series" Connection May Be Utilized Having A Numeric Designation Equal To Or Higher Than That Shown.
6. As An Alternate, Brace Anchorage Connections To Structure May Be Employed Using Any Detail From Structural Connections Section "D" Series Details Where Assembly Design Value Meets Or Exceeds Brace Reaction.
7. For Trade Specific Bracing Installation Notes, Refer To Page 7.1.
8. Utilize Any "G" Series Vertical Support Connection Having A Design Value Equal To Or Greater Than The Corresponding "Rod Total Vertical Load".

REVIEWED FOR CODE COMPLIANCE
OPM-0403
By: William Staehlin
DATE: 01-26-2024
CALIFORNIA BUILDING CODE 2022

REGISTERED PROFESSIONAL ENGINEER MARCIN WASAZNIK S 6612 STRUCTURAL STATE OF CALIFORNIA

ISAT
A Division of Tomarco Contractor Specialties
International Seismic Application Technology
14848 Northam Street, La Mirada, CA 90638
877-999-4728 (Toll Free) 714-523-0845 (Fax)
www.isatsb.com

Rev. 1
11/19/2019
Page
C33-0.75-30

RIGID BRACING REQUIREMENTS [7]

TRAPEZE MOUNTED ELECTRICAL SYSTEMS (Conduit, Cable Tray, Bus Duct, Bus Way) — **MAXIMUM SEISMIC DESIGN FORCE = 0.75 G's**

Requires Use of ISAT Seismic Brackets. Use of Any Non-ISAT Bracket Voids Engineering. — *2013 California Building Code Compliant*

Maximum Trapeze Load (lbs/lf)	Max. Vertical Support Spacing (ft.)	Rod [1] Total Vertical Load (lbs)	Min. [8] Vertical Support Rod Dia. (in.)	TRANSVERSE BRACING REQUIREMENTS					LONGITUDINAL BRACING REQUIREMENTS				
				Max. [2] Brace Spacing (ft.)	Brace [3] Reaction P (lbs)	Min. Brace Assembly E - Pages	Min. Brace Anchorage [6] Form Pour [4] Deck Page D1	Min. Brace Anchorage [6] Metal [5] Deck Page D2	Max. [2] Brace Spacing (ft.)	Brace [3] Reaction P (lbs)	Min. Brace Assembly E - Pages	Min. Brace Anchorage [6] Form Pour [4] Deck Page D1	Min. Brace Anchorage [6] Metal [5] Deck Page D2
				1-Way Transverse Brace Pattern (B20.0, B41.0, B45.0)					3-Way Transverse, Longitudinal Brace Pattern (B20.2, B41.2, B45.2)				
11.0	10	742	1/2	40	513	R12AAEM406	N6	L6	80	667	R12AAEM509	N7	L7
25.0	10	1,685	3/4	40	1,167	R34CFB1P06	N12	L12	80	1,517	R34CFB2P12	N16	L16
				TRANSVERSE, LONGITUDINAL BRACING REQUIREMENTS									
				2-Way, 4-Way Transverse, Longitudinal Brace Pattern (B20.1, B20.3, B41.1, B41.3, B45.1 B45.3)									
35.0	10	1,333	5/8	40	1,062	R58AAEM506	N11	L11					
50.0	10	1,905	3/4	40	1,517	R34CFB2P12	N16	L16					
65.0	10	2,476	3/4	40	1,972	R34DGB2P09	N20	L20					
75.0	10	2,582	3/4	35	1,991	R34DGB2P09	N20	L20					
100.0	10	2,857	3/4	27	2,048	R34DGB2P09	N21	L21					
125.0	10	3,021	3/4	21	1,991	R34DGB2P09	N20	L20					
150.0	10	3,295	3/4	18	2,048	R34DGB2P09	N21	L21					
175.0	10	3,460	3/4	15	1,991	R34DGB2P09	N20	L20					
200.0	10	3,807	3/4	14	2,124	R34DGB2P09	N22	L22					
225.0	10	3,953	3/4	12	2,048	R34DGB2P09	N21	L21					

1. TVL = DL + Fv + ($0.2S_D$ x 0.70 x Wp). All Terms Are Working Loads, Based On Eccentric Loading, 65% Of Total Load Allocated Per Rod.
2. Reductions In Actual Installed Brace Spacing Will Result In An Equal Percentage Reduction In Brace Reaction. As An Option When This Occurs ISAT May Substitute An Alternate Anchorage From Tables D1 or D2 Which Meets or Exceeds The Lowered Brace Reaction.
3. At Max. 50 Degree Brace Inclination.
4. Min. 3,000 psi NWC. Any "N Series" Connection May Be Utilized Having A Numeric Designation Equal To Or Higher Than That Shown.
5. Min. 3,000 psi NWC or LWC. Any "L Series" Connection May Be Utilized Having A Numeric Designation Equal To Or Higher Than That Shown.
6. As An Alternate, Brace Anchorage Connections To Structure May Be Employed Using Any Detail From Structural Connections Section "D" Series Details Where Assembly Design Value Meets Or Exceeds Brace Reaction.
7. For Trade Specific Bracing Installation Notes, Refer To Page 7.1.
8. Utilize Any "G" Series Vertical Support Connection Having A Design Value Equal To Or Greater Than The Corresponding "Rod Total Vertical Load".

REVIEWED FOR CODE COMPLIANCE
OPM-0403
By: William Staehlin
DATE: 01-26-2024
CALIFORNIA BUILDING CODE

REGISTERED PROFESSIONAL ENGINEER MARCIN WASAZNIK S 6612 STRUCTURAL STATE OF CALIFORNIA

ISAT
A Division of Tomarco Contractor Specialties
International Seismic Application Technology
14848 Northam Street, La Mirada, CA 90638
877-999-4728 (Toll Free) 714-523-0845 (Fax)
www.isatsb.com

Rev. 0
8/03/18
Page
C33-0.75-45

RIGID BRACING REQUIREMENTS [7]

TRAPEZE MOUNTED ELECTRICAL SYSTEMS (Conduit, Cable Tray, Bus Duct, Bus Way) — **MAXIMUM SEISMIC DESIGN FORCE = 0.75 G's**

Requires Use of ISAT Seismic Brackets. Use of Any Non-ISAT Bracket Voids Engineering. — *2013 California Building Code Compliant*

Maximum Trapeze Load (lbs/lf)	Max. Vertical Support Spacing (ft.)	Rod [1] Total Vertical Load (lbs)	Min. [8] Vertical Support Rod Dia. (in.)	TRANSVERSE BRACING REQUIREMENTS					LONGITUDINAL BRACING REQUIREMENTS				
				Max. [2] Brace Spacing (ft.)	Brace [3] Reaction P (lbs)	Min. Brace Assembly E - Pages	Min. Brace Anchorage [6] Form Pour [4] Deck Page D1	Min. Brace Anchorage [6] Metal [5] Deck Page D2	Max. [2] Brace Spacing (ft.)	Brace [3] Reaction P (lbs)	Min. Brace Assembly E - Pages	Min. Brace Anchorage [6] Form Pour [4] Deck Page D1	Min. Brace Anchorage [6] Metal [5] Deck Page D2
				1-Way Transverse Brace Pattern (B20.0, B41.0, B45.0)					3-Way Transverse, Longitudinal Brace Pattern (B20.2, B41.2, B45.2)				
11.0	10	1,034	1/2	40	660	R12AAEM406	N7	L7	80	858	R12AAEM506	N9	L9
				TRANSVERSE, LONGITUDINAL BRACING REQUIREMENTS									
				2-Way, 4-Way Transverse, Longitudinal Brace Pattern (B20.1, B20.3, B41.1, B41.3, B45.1 B45.3)									
25.0	10	1,285	5/8	40	975	R58AAEM506	N10	L10					
35.0	10	1,799	3/4	40	1,365	R34DGB1S06	N14	L14					
50.0	10	1,930	3/4	28	1,365	R34DGB1S06	N14	L14					
65.0	10	2,024	3/4	21	1,331	R34DGB1S06	N14	L14					
75.0	10	2,176	3/4	19	1,389	R34DGB1S06	N14	L14					
100.0	10	2,369	3/4	14	1,365	R34DGB1S06	N14	L14					
125.0	10	2,562	5/8	11	1,341	R58AAEM506	N14	L14					

1. TVL = DL + Fv + ($0.2S_D$ x 0.70 x Wp). All Terms Are Working Loads. Based On Eccentric Loading, 65% Of Total Load Allocated Per Rod.
2. Reductions In Actual Installed Brace Spacing Will Result In An Equal Percentage Reduction In Brace Reaction. As An Option When This Occurs ISAT May Substitute An Alternate Anchorage From Tables D1 or D2 Which Meets or Exceeds The Lowered Brace Reaction.
3. At Max. 60 Degree Brace Inclination.
4. Min. 3,000 psi NWC. Any "N Series" Connection May Be Utilized Having A Numeric Designation Equal To Or Higher Than That Shown.
5. Min. 3,000 psi NWC or LWC. Any "L Series" Connection May Be Utilized Having A Numeric Designation Equal To Or Higher Than That Shown.
6. As An Alternate, Brace Anchorage Connections To Structure May Be Employed Using Any Detail From Structural Connections Section "D" Series Details Where Assembly Design Value Meets Or Exceeds Brace Reaction.
7. For Trade Specific Bracing Installation Notes, Refer To Page 7.1.
8. Utilize Any "G" Series Vertical Support Connection Having A Design Value Equal To Or Greater Than The Corresponding "Rod Total Vertical Load".

REVIEWED FOR CODE COMPLIANCE
OPM-0403
BY: William Staehlin
DATE: 01-26-2024
CALIFORNIA BUILDING CODE, 2022

REGISTERED PROFESSIONAL ENGINEER
MARCIN WASAZNIK
S 6612
STRUCTURAL
STATE OF CALIFORNIA

ISAT
A Division of Tomarco Contractor Specialties
International Seismic Application Technology
14848 Northam Street, La Mirada, CA 90638
877-999-4728 (Toll Free) 714-523-0845 (Fax)
www.isatsb.com

Rev. 0
8/03/18
Page
C33-0.75-60

RIGID BRACING REQUIREMENTS [7]

TRAPEZE MOUNTED ELECTRICAL SYSTEMS (Conduit, Cable Tray, Bus Duct, Bus Way) — **MAXIMUM SEISMIC DESIGN FORCE = 1.00 G's**

Requires Use of ISAT Seismic Brackets. Use of Any Non-ISAT Bracket Voids Engineering. — *2013 California Building Code Compliant*

Maximum Trapeze Load (lbs/lf)	Max. Vertical Support Spacing (ft.)	Rod [1] Total Vertical Load (lbs)	Min. [8] Vertical Support Rod Dia. (in.)	TRANSVERSE BRACING REQUIREMENTS: Max. [2] Brace Spacing (ft.)	Brace [3] Reaction P (lbs)	Min. Brace Assembly E - Pages	Min. Brace Anchorage [6]: Form Pour [4] Deck Page D1	Metal [5] Deck Page D2	LONGITUDINAL BRACING REQUIREMENTS: Max. [2] Brace Spacing (ft.)	Brace [3] Reaction P (lbs)	Min. Brace Assembly E - Pages	Min. Brace Anchorage [6]: Form Pour [4] Deck Page D1	Metal [5] Deck Page D2
				1-Way Transverse Brace Pattern (B20.0, B41.0, B45.0)					3-Way Transverse, Longitudinal Brace Pattern (B20.2, B41.2, B45.2)				
11.0	10	513	1/2	40	508	R12AAEM406	N6	L6	80	660	R12AAEM509	N7	L7
				TRANSVERSE, LONGITUDINAL BRACING REQUIREMENTS									
				2-Way, 4-Way Transverse, Longitudinal Brace Pattern (B20.1, B20.3, B41.1, B41.3, B45.1 B45.3)									
25.0	10	693	1/2	40	751	R12AAEM509	N8	L8					
35.0	10	970	1/2	40	1,051	R12AAEM506	N11	L11					
50.0	10	1,338	1/2	38	1,426	R12AAEM506	N15	L15					
65.0	10	1,463	1/2	29	1,415	R12AAEM506	N15	L15					
75.0	10	1,546	1/2	25	1,407	R12AAEM506	N15	L15					
100.0	10	1,777	1/2	19	1,426	R12AAEM506	N15	L15					
125.0	10	1,985	1/2	15	1,407	R12AAEM506	N15	L15					
150.0	10	2,168	1/2	12	1,351	R12AAEM506	N14	L14					
175.0	10	2,447	1/2	11	1,445	R12AAEM506	N15	L15					

1. TVL = DL + Fv + ($0.2S_D$ x 0.70 x Wp). All Terms Are Working Loads. Based On Eccentric Loading, 65% Of Total Load Allocated Per Rod.
2. Reductions In Actual Installed Brace Spacing Will Result In An Equal Percentage Reduction In Brace Reaction. As An Option When This Occurs ISAT May Substitute An Alternate Anchorage From Tables D1 or D2 Which Meets or Exceeds The Lowered Brace Reaction.
3. At Max. 30 Degree Brace Inclination.
4. Min. 3,000 psi NWC. Any "N Series" Connection May Be Utilized Having A Numeric Designation Equal To Or Higher Than That Shown.
5. Min. 3,000 psi NWC or LWC. Any "L Series" Connection May Be Utilized Having A Numeric Designation Equal To Or Higher Than That Shown.
6. As An Alternate, Brace Anchorage Connections To Structure May Be Employed Using Any Detail From Structural Connections Section "D" Series Details Where Assembly Design Value Meets Or Exceeds Brace Reaction.
7. For Trade Specific Bracing Installation Notes, Refer To Page 7.1.
8. Utilize Any "G" Series Vertical Support Connection Having A Design Value Equal To Or Greater Than The Corresponding "Rod Total Vertical Load".

REVIEWED FOR CODE COMPLIANCE
OPM-0403
BY: William Staehlin
DATE: 01-26-2024
CALIFORNIA BUILDING CODE, 2022

REGISTERED PROFESSIONAL ENGINEER MARCIN WASAZNIK S-6612 STRUCTURAL STATE OF CALIFORNIA

ISAT
A Division of Tomarco Contractor Specialties
International Seismic Application Technology
14848 Northam Street, La Mirada, CA 90638
877-999-4728 (Toll Free) 714-523-0845 (Fax)
www.isatsb.com

Rev. 1
11/19/2019
Page
C33-1-30

RIGID BRACING REQUIREMENTS [7]

TRAPEZE MOUNTED ELECTRICAL SYSTEMS (Conduit, Cable Tray, Bus Duct, Bus Way) — **MAXIMUM SEISMIC DESIGN FORCE = 1.00 G's**

Requires Use of ISAT Seismic Brackets. Use of Any Non-ISAT Bracket Voids Engineering. — *2013 California Building Code Compliant*

Maximum Trapeze Load (lbs/lf)	Max. Vertical Support Spacing (ft.)	Rod [1] Total Vertical Load (lbs)	Min. [8] Vertical Support Rod Dia. (in.)	TRANSVERSE BRACING REQUIREMENTS					LONGITUDINAL BRACING REQUIREMENTS				
				Max. [2] Brace Spacing (ft.)	Brace [3] Reaction P (lbs)	Min. Brace Assembly E - Pages	Min. Brace Anchorage [6] Form Pour [4] Deck Page D1	Min. Brace Anchorage [6] Metal [5] Deck Page D2	Max. [2] Brace Spacing (ft.)	Brace [3] Reaction P (lbs)	Min. Brace Assembly E - Pages	Min. Brace Anchorage [6] Form Pour [4] Deck Page D1	Min. Brace Anchorage [6] Metal [5] Deck Page D2
				1-Way Transverse Brace Pattern (B20.0, B41.0, B45.0)					3-Way Transverse, Longitudinal Brace Pattern (B20.2, B41.2, B45.2)				
11.0	10	957	1/2	40	685	R12AAEM509	N7	L7	80	890	R12AAEM506	N9	L9
				TRANSVERSE, LONGITUDINAL BRACING REQUIREMENTS									
				2-Way, 4-Way Transverse, Longitudinal Brace Pattern (B20.1, B20.3, B41.1, B41.3, B45.1 B45.3)									
25.0	10	1,197	1/2	40	1,011	R12AAEM506	N11	L11					
35.0	10	1,675	5/8	40	1,416	R58AAEM506	N15	L15					
50.0	10	2,345	3/4	39	1,972	R34DGB2P09	N20	L20					
65.0	10	2,476	3/4	30	1,972	R34DGB2P09	N20	L20					
75.0	10	2,564	3/4	26	1,972	R34DGB2P09	N20	L20					
100.0	10	2,832	3/4	20	2,022	R34DGB2P09	N21	L21					
125.0	10	3,051	3/4	16	2,022	R34DGB2P09	N21	L21					
150.0	10	3,222	3/4	13	1,972	R34DGB2P09	N20	L20					
175.0	10	3,417	3/4	11	1,947	R34DGB2P09	N20	L20					
200.0	10	3,710	3/4	10	2,022	R34DGB2P09	N21	L21					

1. TVL = DL + Fv + ($0.2S_D$ x 0.70 x Wp). All Terms Are Working Loads. Based On Eccentric Loading, 65% Of Total Load Allocated Per Rod.
2. Reductions In Actual Installed Brace Spacing Will Result In An Equal Percentage Reduction In Brace Reaction. As An Option When This Occurs ISAT May Substitute An Alternate Anchorage From Tables D1 or D2 Which Meets or Exceeds The Lowered Brace Reaction.
3. At Max. 50 Degree Brace Inclination.
4. Min. 3,000 psi NWC. Any "N Series" Connection May Be Utilized Having A Numeric Designation Equal To Or Higher Than That Shown.
5. Min. 3,000 psi NWC or LWC. Any "L Series" Connection May Be Utilized Having A Numeric Designation Equal To Or Higher Than That Shown.
6. As An Alternate, Brace Anchorage Connections To Structure May Be Employed Using Any Detail From Structural Connections Section "D" Series Details Where Assembly Design Value Meets Or Exceeds Brace Reaction.
7. For Trade Specific Bracing Installation Notes, Refer To Page 7.1.
8. Utilize Any "G" Series Vertical Support Connection Having A Design Value Equal To Or Greater Than The Corresponding "Rod Total Vertical Load".

REVIEWED FOR CODE COMPLIANCE
OPM-0403
By: William Staehlin
DATE: 01-26-2024
CALIFORNIA BUILDING CODE 2022

REGISTERED PROFESSIONAL ENGINEER MARCIN WASAZNIK S 6612 STRUCTURAL STATE OF CALIFORNIA

ISAT
A Division of Tomarco Contractor Specialties
International Seismic Application Technology
14848 Northam Street, La Mirada, CA 90638
877-999-4728 (Toll Free) 714-523-0845 (Fax)
www.isatsb.com

Rev. 0
8/03/18
Page
C33-1-45

RIGID BRACING REQUIREMENTS [7]

TRAPEZE MOUNTED ELECTRICAL SYSTEMS (Conduit, Cable Tray, Bus Duct, Bus Way) — **MAXIMUM SEISMIC DESIGN FORCE = 1.00 G's**

Requires Use of ISAT Seismic Brackets. Use of Any Non-ISAT Bracket Voids Engineering. — *2013 California Building Code Compliant*

Maximum Trapeze Load (lbs/lf)	Max. Vertical Support Spacing (ft.)	Rod [1] Total Vertical Load (lbs)	Min. [8] Vertical Support Rod Dia. (in.)	TRANSVERSE BRACING REQUIREMENTS					LONGITUDINAL BRACING REQUIREMENTS				
				Max. [2] Brace Spacing (ft.)	Brace [3] Reaction P (lbs)	Min. Brace Assembly E - Pages	Min. Brace Anchorage [6] Form Pour [4] Deck Page D1	Min. Brace Anchorage [6] Metal [5] Deck Page D2	Max. [2] Brace Spacing (ft.)	Brace [3] Reaction P (lbs)	Min. Brace Assembly E - Pages	Min. Brace Anchorage [6] Form Pour [4] Deck Page D1	Min. Brace Anchorage [6] Metal [5] Deck Page D2
				1-Way Transverse Brace Pattern (B20.0, B41.0, B45.0)					3-Way Transverse, Longitudinal Brace Pattern (B20.2, B41.2, B45.2)				
11.0	10	1,346	5/8	40	880	R58AAEM506	N9	L9	80	1,144	R58AAEM506	N12	L12
				TRANSVERSE, LONGITUDINAL BRACING REQUIREMENTS									
				2-Way, 4-Way Transverse, Longitudinal Brace Pattern (B20.1, B20.3, B41.1, B41.3, B45.1 B45.3)									
25.0	10	1,640	3/4	40	1,300	R34DGB1S06	N13	L13					
35.0	10	1,799	3/4	30	1,365	R34DGB1S06	N14	L14					
50.0	10	1,930	3/4	21	1,365	R34DGB1S06	N14	L14					
65.0	10	2,048	3/4	16	1,352	R34DGB1S06	N14	L14					
75.0	10	2,150	3/4	14	1,365	R34DGB1S06	N14	L14					
100.0	10	2,298	5/8	10	1,300	R58AAEM506	N13	L13					

1. TVL = DL + Fv + ($0.2S_D$ x 0.70 x Wp). All Terms Are Working Loads. Based On Eccentric Loading, 65% Of Total Load Allocated Per Rod.
2. Reductions In Actual Installed Brace Spacing Will Result In An Equal Percentage Reduction In Brace Reaction. As An Option When This Occurs ISAT May Substitute An Alternate Anchorage From Tables D1 or D2 Which Meets or Exceeds The Lowered Brace Reaction.
3. At Max. 60 Degree Brace Inclination.
4. Min. 3,000 psi NWC. Any "N Series" Connection May Be Utilized Having A Numeric Designation Equal To Or Higher Than That Shown.
5. Min. 3,000 psi NWC or LWC. Any "L Series" Connection May Be Utilized Having A Numeric Designation Equal To Or Higher Than That Shown.
6. As An Alternate, Brace Anchorage Connections To Structure May Be Employed Using Any Detail From Structural Connections Section "D" Series Details Where Assembly Design Value Meets Or Exceeds Brace Reaction.
7. For Trade Specific Bracing Installation Notes, Refer To Page 7.1.
8. Utilize Any "G" Series Vertical Support Connection Having A Design Value Equal To Or Greater Than The Corresponding "Rod Total Vertical Load".

REVIEWED FOR CODE COMPLIANCE
OPM-0403
BY: William Staehlin
DATE: 01-26-2024
CALIFORNIA BUILDING CODE, 2022

REGISTERED PROFESSIONAL ENGINEER MARCIN WASAZNIK S-6612 STRUCTURAL STATE OF CALIFORNIA

ISAT
A Division of Tomarco Contractor Specialties

International Seismic Application Technology
14848 Northam Street, La Mirada, CA 90638
877-999-4728 (Toll Free) 714-523-0845 (Fax)
www.isatsb.com

Rev. 0
8/03/18
Page
C33-1-60

RIGID BRACING REQUIREMENTS [7]

2-TIERED TRAPEZE MOUNTED ELECTRICAL SYSTEMS (Conduit, Cable Tray, Bus Duct, Bus Way) — **MAXIMUM SEISMIC DESIGN FORCE = 0.25 G's**

Requires Use of ISAT Seismic Brackets. Use of Any Non-ISAT Bracket Voids Engineering. — *2013 California Building Code Compliant*

Combined 2-Tier Maximum Trapeze Load (lbs/lf)	Max. Vertical Support Spacing (ft.)	Rod [1] Total Vertical Load (lbs)	Min. [8] Vertical Support Rod Dia. (in.)	TRANSVERSE BRACING REQUIREMENTS					LONGITUDINAL BRACING REQUIREMENTS				
				Max. [2] Brace Spacing (ft.)	Brace [3] Reaction P (lbs)	Min. Brace Assembly E - Pages	Min. Brace Anchorage [6] Form Pour [4] Deck Page D1	Min. Brace Anchorage [6] Metal [5] Deck Page D2	Max. [2] Brace Spacing (ft.)	Brace [3] Reaction P (lbs)	Min. Brace Assembly E - Pages	Min. Brace Anchorage [6] Form Pour [4] Deck Page D1	Min. Brace Anchorage [6] Metal [5] Deck Page D2
				1-Way Transverse Brace Pattern (B21.0)					3-Way Transverse, Longitudinal Brace Pattern (B21.2)				
11.0	10	201	3/8	40	64	R38AAEM306	N1	L1	80	83	R38AAEM306	N1	L1
25.0	10	456	1/2	40	144	R12AAEM306	N2	L2	80	188	R12AAEM306	N2	L2
35.0	10	639	1/2	40	202	R12AAEM306	N3	L3	80	263	R12AAEM306	N3	L3
50.0	10	912	1/2	40	289	R12AAEM306	N3	L3	80	375	R12AAEM406	N4	L4
65.0	10	1,186	1/2	40	375	R12AAEM406	N4	L4	80	488	R12AAEM406	N5	L5
75.0	10	1,368	1/2	40	433	R12AAEM406	N5	L5	80	563	R12AAEM406	N6	L6
100.0	10	1,824	1/2	40	577	R12AAEM406	N6	L6	80	751	R12AAEM509	N8	L8
				TRANSVERSE, LONGITUDINAL BRACING REQUIREMENTS									
				2-Way, 4-Way Transverse, Longitudinal Brace Pattern (B21.1, B21.3)									
125.0	10	1,689	1/2	40	469	R12AAEM406	N5	L5					
150.0	10	2,026	1/2	40	563	R12AAEM406	N6	L6					
175.0	10	2,364	1/2	40	657	R12AAEM406	N7	L7					
200.0	10	2,702	5/8	40	751	R58AAEM509	N8	L8					
225.0	10	3,040	5/8	40	844	R58AAEM506	N9	L9					

1. TVL = DL + Fv + ($0.2S_D$ x 0.70 x Wp). All Terms Are Working Loads, Based On Eccentric Loading, 65% Of Total Load Allocated Per Rod.
2. Reductions In Actual Installed Brace Spacing Will Result In An Equal Percentage Reduction In Brace Reaction. As An Option When This Occurs ISAT May Substitute An Alternate Anchorage From Tables D1 or D2 Which Meets or Exceeds The Lowered Brace Reaction.
3. At Max. 30 Degree Brace Inclination.
4. Min. 3,000 psi NWC. Any "N Series" Connection May Be Utilized Having A Numeric Designation Equal To Or Higher Than That Shown.
5. Min. 3,000 psi NWC or LWC. Any "L Series" Connection May Be Utilized Having A Numeric Designation Equal To Or Higher Than That Shown.
6. As An Alternate, Brace Anchorage Connections To Structure May Be Employed Using Any Detail From Structural Connections Section "D" Series Details Where Assembly Design Value Meets Or Exceeds Brace Reaction.
7. For Trade Specific Bracing Installation Notes, Refer To Page 7.1.
8. Utilize Any "G" Series Vertical Support Connection Having A Design Value Equal To Or Greater Than The Corresponding "Rod Total Vertical Load".

REVIEWED FOR CODE COMPLIANCE BY: William Staehlin DATE: 01-26-2024 CALIFORNIA BUILDING CODE

REGISTERED PROFESSIONAL ENGINEER MARCIN WASAZNIK S 6612 STRUCTURAL STATE OF CALIFORNIA

ISAT
A Division of Tomarco Contractor Specialties
International Seismic Application Technology
14848 Northam Street, La Mirada, CA 90638
877-999-4728 (Toll Free) 714-523-0845 (Fax)
www.isatsb.com

Rev.0
8/03/18
Page
C33-0.25-30
2-Tier

RIGID BRACING REQUIREMENTS [7]

2-TIERED TRAPEZE MOUNTED ELECTRICAL SYSTEMS (Conduit, Cable Tray, Bus Duct, Bus Way) — **MAXIMUM SEISMIC DESIGN FORCE = 0.25 G's**

Requires Use of ISAT Seismic Brackets. Use of Any Non-ISAT Bracket Voids Engineering. — *2013 California Building Code Compliant*

Combined 2-Tier Maximum Trapeze Load (lbs/lf)	Max. Vertical Support Spacing (ft.)	Rod [1] Total Vertical Load (lbs)	Min. [8] Vertical Support Rod Dia. (in.)	TRANSVERSE BRACING REQUIREMENTS					LONGITUDINAL BRACING REQUIREMENTS				
				Max. [2] Brace Spacing (ft.)	Brace [3] Reaction P (lbs)	Min. Brace Assembly E - Pages	Min. Brace Anchorage [6] Form Pour [4] Deck Page D1	Min. Brace Anchorage [6] Metal [5] Deck Page D2	Max. [2] Brace Spacing (ft.)	Brace [3] Reaction P (lbs)	Min. Brace Assembly E - Pages	Min. Brace Anchorage [6] Form Pour [4] Deck Page D1	Min. Brace Anchorage [6] Metal [5] Deck Page D2
				1-Way Transverse Brace Pattern (B20.0)					3-Way Transverse, Longitudinal Brace Pattern (B21.2)				
11.0	10	312	3/8	40	86	R38AAEM306	N1	L1	80	111	R38AAEM306	N2	L2
25.0	10	708	1/2	40	194	R12AAEM306	N2	L2	80	253	R12AAEM306	N3	L3
35.0	10	991	1/2	40	272	R12AAEM306	N3	L3	80	354	R12AAEM406	N4	L4
50.0	10	1,416	1/2	40	389	R12AAEM406	N4	L4	80	506	R12AAEM406	N6	L6
65.0	10	1,841	5/8	40	506	R58AAEM406	N6	L6	80	657	R58AAEM406	N7	L7
75.0	10	2,124	3/4	40	583	R34CFB1P12	N6	L6	80	758	R34CFB1P09	N8	L8
100.0	10	2,832	3/4	40	778	R34CFB1P09	N8	L8	80	1,011	R34CFB1P06	N11	L11
				TRANSVERSE, LONGITUDINAL BRACING REQUIREMENTS									
				2-Way, 4-Way Transverse, Longitudinal Brace Pattern (B21.1)									
125.0	10	2,319	5/8	40	632	R58AAEM406	N7	L7					
150.0	10	2,782	5/8	40	758	R58AAEM509	N8	L8					
175.0	10	3,246	3/4	40	885	R34CFB1P09	N9	L9					
200.0	10	3,710	3/4	40	1,011	R34CFB1P06	N11	L11					
225.0	10	4,063	3/4	38	1,081	R34CFB1P06	N11	L11					

1. TVL = DL + Fv + ($0.2S_D$ x 0.70 x Wp). All Terms Are Working Loads. Based On Eccentric Loading, 65% Of Total Load Allocated Per Rod.
2. Reductions In Actual Installed Brace Spacing Will Result In An Equal Percentage Reduction In Brace Reaction. As An Option When This Occurs ISAT May Substitute An Alternate Anchorage From Tables D1 or D2 Which Meets or Exceeds The Lowered Brace Reaction.
3. At Max. 50 Degree Brace Inclination.
4. Min. 3,000 psi NWC. Any "N Series" Connection May Be Utilized Having A Numeric Designation Equal To Or Higher Than That Shown.
5. Min. 3,000 psi NWC or LWC. Any "L Series" Connection May Be Utilized Having A Numeric Designation Equal To Or Higher Than That Shown.
6. As An Alternate, Brace Anchorage Connections To Structure May Be Employed Using Any Detail From Structural Connections Section "D" Series Details Where Assembly Design Value Meets Or Exceeds Brace Reaction.
7. For Trade Specific Bracing Installation Notes, Refer To Page 7.1.
8. Utilize Any "G" Series Vertical Support Connection Having A Design Value Equal To Or Greater Than The Corresponding "Rod Total Vertical Load".

REVIEWED FOR CODE COMPLIANCE BY: William Staehlin DATE: 01-26-2024 CALIFORNIA BUILDING CODE

REGISTERED PROFESSIONAL ENGINEER MARCIN WASAZNIK S 6612 STRUCTURAL STATE OF CALIFORNIA

ISAT
A Division of Tomarco Contractor Specialties
International Seismic Application Technology
14848 Northam Street, La Mirada, CA 90638
877-900-4728 (Toll Free) 714-523-0845 (Fax)
www.isatsb.com

Rev.0
10/19/18
Page
C33-0.25-45
2-Tier

RIGID BRACING REQUIREMENTS [7]

2-TIERED TRAPEZE MOUNTED ELECTRICAL SYSTEMS (Conduit, Cable Tray, Bus Duct, Bus Way) — **MAXIMUM SEISMIC DESIGN FORCE = 0.25 G's**

Requires Use of ISAT Seismic Brackets. Use of Any Non-ISAT Bracket Voids Engineering. — *2013 California Building Code Compliant*

Combined 2-Tier Maximum Trapeze Load (lbs/lf)	Max. Vertical Support Spacing (ft.)	Rod [1] Total Vertical Load (lbs)	Min. [8] Vertical Support Rod Dia. (in.)	TRANSVERSE BRACING REQUIREMENTS					LONGITUDINAL BRACING REQUIREMENTS				
				Max. [2] Brace Spacing (ft.)	Brace [3] Reaction P (lbs)	Min. Brace Assembly E - Pages	Min. Brace Anchorage [6] Form Pour [4] Deck Page D1	Min. Brace Anchorage [6] Metal [5] Deck Page D2	Max. [2] Brace Spacing (ft.)	Brace [3] Reaction P (lbs)	Min. Brace Assembly E - Pages	Min. Brace Anchorage [6] Form Pour [4] Deck Page D1	Min. Brace Anchorage [6] Metal [5] Deck Page D2
				1-Way Transverse Brace Pattern (B21.0)					3-Way Transverse, Longitudinal Brace Pattern (B21.2)				
11.0	10	409	3/8	40	110	R38AAEM306	N2	L2	80	143	R38AAEM306	N2	L2
25.0	10	930	1/2	40	250	R12AAEM306	N3	L3	80	325	R12AAEM409	N4	L4
35.0	10	1,301	1/2	40	350	R12AAEM406	N4	L4	80	455	R12AAEM406	N5	L5
50.0	10	1,859	5/8	40	500	R58AAEM406	N5	L5	80	650	R58AAEM406	N7	L7
65.0	10	2,417	3/4	40	650	R34CFB1P12	N7	L7	80	845	R34CFB1P09	N9	L9
				TRANSVERSE, LONGITUDINAL BRACING REQUIREMENTS									
				2-Way, 4-Way Transverse, Longitudinal Brace Pattern (B21.1, B21.3)									
75.0	10	1,723	5/8	40	488	R58AAEM406	N5	L5					
100.0	10	2,298	5/8	40	650	R58AAEM406	N7	L7					
125.0	10	2,872	3/4	40	813	R34CFB1P09	N9	L9					
150.0	10	3,340	3/4	38	926	R34DGB1P06	N10	L10					
175.0	10	3,524	3/4	32	910	R34DGB1P09	N10	L10					
200.0	10	3,815	3/4	29	943	R34DGB1P06	N10	L10					
225.0	10	4,052	3/4	26	951	R34DGB1P06	N10	L10					

1. TVL = DL + Fv + ($0.2S_D$ x 0.70 x Wp). All Terms Are Working Loads. Based On Eccentric Loading, 65% Of Total Load Allocated Per Rod.
2. Reductions In Actual Installed Brace Spacing Will Result In An Equal Percentage Reduction In Brace Reaction. As An Option When This Occurs ISAT May Substitute An Alternate Anchorage From Tables D1 or D2 Which Meets or Exceeds The Lowered Brace Reaction.
3. At Max. 60 Degree Brace Inclination.
4. Min. 3,000 psi NWC. Any "N Series" Connection May Be Utilized Having A Numeric Designation Equal To Or Higher Than That Shown.
5. Min. 3,000 psi NWC or LWC. Any "L Series" Connection May Be Utilized Having A Numeric Designation Equal To Or Higher Than That Shown.
6. As An Alternate, Brace Anchorage Connections To Structure May Be Employed Using Any Detail From Structural Connections Section "D" Series Details Where Assembly Design Value Meets Or Exceeds Brace Reaction.
7. For Trade Specific Bracing Installation Notes, Refer To Page 7.1.
8. Utilize Any "G" Series Vertical Support Connection Having A Design Value Equal To Or Greater Than The Corresponding "Rod Total Vertical Load".

REVIEWED FOR CODE COMPLIANCE
OPM-0403
BY: William Staehlin
DATE: 01-26-2024
CALIFORNIA BUILDING CODE

REGISTERED PROFESSIONAL ENGINEER
MARCIN WASAZNIK
S 6612
STRUCTURAL
STATE OF CALIFORNIA

ISAT
A Division of Tomarco Contractor Specialties

International Seismic Application Technology
14848 Northam Street, La Mirada, CA 90638
877-999-4728 (Toll Free) 714-523-0845 (Fax)
www.isatsb.com

Rev.0
8/03/18
Page
C33-0.25-60
2-Tier

RIGID BRACING REQUIREMENTS [7]

2-TIERED TRAPEZE MOUNTED ELECTRICAL SYSTEMS (Conduit, Cable Tray, Bus Duct, Bus Way) — **MAXIMUM SEISMIC DESIGN FORCE = 0.50 G's**

Requires Use of ISAT Seismic Brackets. Use of Any Non-ISAT Bracket Voids Engineering. — *2013 California Building Code Compliant*

Combined 2-Tier Maximum Trapeze Load (lbs/lf)	Max. Vertical Support Spacing (ft.)	Rod [1] Total Vertical Load (lbs)	Min. [8] Vertical Support Rod Dia. (in.)	TRANSVERSE BRACING REQUIREMENTS					LONGITUDINAL BRACING REQUIREMENTS				
				Max. [2] Brace Spacing (ft.)	Brace [3] Reaction P (lbs)	Min. Brace Assembly E - Pages	Min. Brace Anchorage [6] Form Pour [4] Deck Page D1	Min. Brace Anchorage [6] Metal [5] Deck Page D2	Max. [2] Brace Spacing (ft.)	Brace [3] Reaction P (lbs)	Min. Brace Assembly E - Pages	Min. Brace Anchorage [6] Form Pour [4] Deck Page D1	Min. Brace Anchorage [6] Metal [5] Deck Page D2
				1-Way Transverse Brace Pattern (B21.0)					3-Way Transverse, Longitudinal Brace Pattern (B21.2)				
11.0	10	305	3/8	40	127	R38AAEM306	N2	L2	80	165	R38AAEM306	N2	L2
25.0	10	693	1/2	40	289	R12AAEM306	N3	L3	80	375	R12AAEM406	N4	L4
35.0	10	970	1/2	40	404	R12AAEM406	N5	L5	80	525	R12AAEM406	N6	L6
50.0	10	1,386	1/2	40	577	R12AAEM406	N6	L6	80	751	R12AAEM509	N8	L8
65.0	10	1,801	5/8	40	751	R58AAEM509	N8	L8	80	976	R58AAEM506	N10	L10
75.0	10	2,079	5/8	40	866	R58AAEM506	N9	L9	80	1,126	R58AAEM506	N12	L12
				TRANSVERSE, LONGITUDINAL BRACING REQUIREMENTS									
				2-Way, 4-Way Transverse, Longitudinal Brace Pattern (B21.1, B21.3)									
100.0	10	1,824	1/2	40	751	R12AAEM509	N8	L8					
125.0	10	2,281	5/8	40	938	R58AAEM506	N10	L10					
150.0	10	2,737	5/8	40	1,126	R58AAEM506	N12	L12					
175.0	10	3,068	5/8	37	1,215	R58AAEM506	N13	L13					
200.0	10	3,270	5/8	32	1,201	R58AAEM506	N13	L13					
225.0	10	3,519	5/8	29	1,224	R58AAEM506	N13	L13					

1. TVL = DL + Fv + ($0.2S_D$ x 0.70 x Wp). All Terms Are Working Loads, Based On Eccentric Loading, 65% Of Total Load Allocated Per Rod.
2. Reductions In Actual Installed Brace Spacing Will Result In An Equal Percentage Reduction In Brace Reaction. As An Option When This Occurs ISAT May Substitute An Alternate Anchorage From Tables D1 or D2 Which Meets or Exceeds The Lowered Brace Reaction.
3. At Max. 30 Degree Brace Inclination.
4. Min. 3,000 psi NWC. Any "N Series" Connection May Be Utilized Having A Numeric Designation Equal To Or Higher Than That Shown.
5. Min. 3,000 psi NWC or LWC. Any "L Series" Connection May Be Utilized Having A Numeric Designation Equal To Or Higher Than That Shown.
6. As An Alternate, Brace Anchorage Connections To Structure May Be Employed Using Any Detail From Structural Connections Section "D" Series Details Where Assembly Design Value Meets Or Exceeds Brace Reaction.
7. For Trade Specific Bracing Installation Notes, Refer To Page 7.1.
8. Utilize Any "G" Series Vertical Support Connection Having A Design Value Equal To Or Greater Than The Corresponding "Rod Total Vertical Load".

REVIEWED FOR CODE COMPLIANCE
OPM-0403
By: William Staehlin
DATE: 01-26-2024
CALIFORNIA BUILDING CODE 2019

REGISTERED PROFESSIONAL ENGINEER MARCIN WASAZNIK S 6612 STRUCTURAL STATE OF CALIFORNIA

ISAT
A Division of Tomarco Contractor Specialties
International Seismic Application Technology
14848 Northam Street, La Mirada, CA 90638
877-999-4728 (Toll Free) 714-523-0845 (Fax)
www.isatsb.com

Rev.0
8/03/18
Page
C33-0.5-30
2-Tier

RIGID BRACING REQUIREMENTS [7]

2-TIERED TRAPEZE MOUNTED ELECTRICAL SYSTEMS (Conduit, Cable Tray, Bus Duct, Bus Way) — **MAXIMUM SEISMIC DESIGN FORCE = 0.50 G's**

Requires Use of ISAT Seismic Brackets. Use of Any Non-ISAT Bracket Voids Engineering. — *2013 California Building Code Compliant*

Combined 2-Tier Maximum Trapeze Load (lbs/lf)	Max. Vertical Support Spacing (ft.)	Rod [1] Total Vertical Load (lbs)	Min. [8] Vertical Support Rod Dia. (in.)	TRANSVERSE BRACING REQUIREMENTS: Max. [2] Brace Spacing (ft.)	Brace [3] Reaction P (lbs)	Min. Brace Assembly E - Pages	Min. Brace Anchorage [6]: Form Pour [4] Deck Page D1	Metal [5] Deck Page D2	LONGITUDINAL BRACING REQUIREMENTS: Max. [2] Brace Spacing (ft.)	Brace [3] Reaction P (lbs)	Min. Brace Assembly E - Pages	Min. Brace Anchorage [6]: Form Pour [4] Deck Page D1	Metal [5] Deck Page D2
				1-Way Transverse Brace Pattern (B20.0)					3-Way Transverse, Longitudinal Brace Pattern (B21.2)				
11.0	10	527	1/2	40	171	R12AAEM306	N2	L2	80	222	R12AAEM306	N3	L3
25.0	10	1,197	1/2	40	389	R12AAEM406	N4	L4	80	506	R12AAEM406	N6	L6
35.0	10	1,675	5/8	40	545	R58AAEM406	N6	L6	80	708	R58AAEM509	N8	L8
50.0	10	2,345	3/4	39	758	R34CFB1P09	N8	L8	78	986	R34CFB1P06	N10	L10
				TRANSVERSE, LONGITUDINAL BRACING REQUIREMENTS									
				2-Way, 4-Way Transverse, Longitudinal Brace Pattern (B21.1)									
65.0	10	1,841	5/8	40	657	R58AAEM406	N7	L7					
75.0	10	2,124	3/4	40	758	R34CFB1P09	N8	L8					
100.0	10	2,832	3/4	40	1,011	R34CFB1P06	N11	L11					
125.0	10	3,051	3/4	32	1,011	R34CFB1P06	N11	L11					
150.0	10	3,295	3/4	27	1,024	R34CFB1P06	N11	L11					
175.0	10	3,502	3/4	23	1,018	R34CFB1P06	N11	L11					
200.0	10	3,807	3/4	21	1,062	R34CFB1P06	N11	L11					
225.0	10	4,063	3/4	19	1,081	R34CFB1P06	N11	L11					

1. TVL = DL + Fv + ($0.2S_D$ x 0.70 x Wp). All Terms Are Working Loads. Based On Eccentric Loading, 65% Of Total Load Allocated Per Rod.
2. Reductions In Actual Installed Brace Spacing Will Result In An Equal Percentage Reduction In Brace Reaction. As An Option When This Occurs ISAT May Substitute An Alternate Anchorage From Tables D1 or D2 Which Meets or Exceeds The Lowered Brace Reaction.
3. At Max. 50 Degree Brace Inclination.
4. Min. 3,000 psi NWC. Any "N Series" Connection May Be Utilized Having A Numeric Designation Equal To Or Higher Than That Shown.
5. Min. 3,000 psi NWC or LWC. Any "L Series" Connection May Be Utilized Having A Numeric Designation Equal To Or Higher Than That Shown.
6. As An Alternate, Brace Anchorage Connections To Structure May Be Employed Using Any Detail From Structural Connections Section "D" Series Details Where Assembly Design Value Meets Or Exceeds Brace Reaction.
7. For Trade Specific Bracing Installation Notes, Refer To Page 7.1.
8. Utilize Any "G" Series Vertical Support Connection Having A Design Value Equal To Or Greater Than The Corresponding "Rod Total Vertical Load".

REVIEWED FOR CODE COMPLIANCE
HCAI
OPM-0403
BY: William Staehlin
DATE: 01-26-2024
CALIFORNIA BUILDING CODE 2022

REGISTERED PROFESSIONAL ENGINEER MARCIN WASAZNIK S 6612 STRUCTURAL STATE OF CALIFORNIA

ISAT
A Division of Tomarco Contractor Specialties
International Seismic Application Technology
14848 Northam Street, La Mirada, CA 90638
877-900-4728 (Toll Free) 714-523-0845 (Fax)
www.isatsb.com

Rev.0
10/19/18
Page
C33-0.5-45
2-Tier

RIGID BRACING REQUIREMENTS [7]

2-TIERED TRAPEZE MOUNTED ELECTRICAL SYSTEMS (Conduit, Cable Tray, Bus Duct, Bus Way) — **MAXIMUM SEISMIC DESIGN FORCE = 0.50 G's**

Requires Use of ISAT Seismic Brackets. Use of Any Non-ISAT Bracket Voids Engineering. — *2013 California Building Code Compliant*

Combined 2-Tier Maximum Trapeze Load (lbs/lf)	Max. Vertical Support Spacing (ft.)	Rod [1] Total Vertical Load (lbs)	Min. [8] Vertical Support Rod Dia. (in.)	TRANSVERSE BRACING REQUIREMENTS					LONGITUDINAL BRACING REQUIREMENTS				
				Max. [2] Brace Spacing (ft.)	Brace [3] Reaction P (lbs)	Min. Brace Assembly E - Pages	Min. Brace Anchorage [6] Form Pour [4] Deck Page D1	Min. Brace Anchorage [6] Metal [5] Deck Page D2	Max. [2] Brace Spacing (ft.)	Brace [3] Reaction P (lbs)	Min. Brace Assembly E - Pages	Min. Brace Anchorage [6] Form Pour [4] Deck Page D1	Min. Brace Anchorage [6] Metal [5] Deck Page D2
				1-Way Transverse Brace Pattern (B21.0)					3-Way Transverse, Longitudinal Brace Pattern (B21.2)				
11.0	10	721	1/2	40	220	R12AAEM306	N3	L3	80	286	R12AAEM306	N3	L3
25.0	10	1,640	3/4	40	500	R34CFA1P06	N5	L5	80	650	R34CFB1P12	N7	L7
				TRANSVERSE, LONGITUDINAL BRACING REQUIREMENTS									
				2-Way, 4-Way Transverse, Longitudinal Brace Pattern (B21.1, B21.3)									
35.0	10	1,301	1/2	40	455	R12AAEM406	N5	L5					
50.0	10	1,859	5/8	40	650	R58AAEM406	N7	L7					
65.0	10	2,417	3/4	40	845	R34CFB1P09	N9	L9					
75.0	10	2,576	3/4	36	878	R34DGB1P09	N9	L9					
100.0	10	2,795	3/4	27	878	R34DGB1P09	N9	L9					
125.0	10	3,050	3/4	22	894	R34DGB1P09	N9	L9					
150.0	10	3,340	3/4	19	926	R34DGB1P06	N10	L10					
175.0	10	3,524	3/4	16	910	R34DGB1P09	N10	L10					
200.0	10	3,744	3/4	14	910	R34DGB1P09	N10	L10					
225.0	10	4,052	3/4	13	951	R34DGB1P06	N10	L10					

1. TVL = DL + Fv + ($0.2S_D$ x 0.70 x Wp). All Terms Are Working Loads, Based On Eccentric Loading, 65% Of Total Load Allocated Per Rod.
2. Reductions In Actual Installed Brace Spacing Will Result In An Equal Percentage Reduction In Brace Reaction. As An Option When This Occurs ISAT May Substitute An Alternate Anchorage From Tables D1 or D2 Which Meets or Exceeds The Lowered Brace Reaction.
3. At Max. 60 Degree Brace Inclination.
4. Min. 3,000 psi NWC. Any "N Series" Connection May Be Utilized Having A Numeric Designation Equal To Or Higher Than That Shown.
5. Min. 3,000 psi NWC or LWC. Any "L Series" Connection May Be Utilized Having A Numeric Designation Equal To Or Higher Than That Shown.
6. As An Alternate, Brace Anchorage Connections To Structure May Be Employed Using Any Detail From Structural Connections Section "D" Series Details Where Assembly Design Value Meets Or Exceeds Brace Reaction.
7. For Trade Specific Bracing Installation Notes, Refer To Page 7.1.
8. Utilize Any "G" Series Vertical Support Connection Having A Design Value Equal To Or Greater Than The Corresponding "Rod Total Vertical Load".

REVIEWED FOR CODE COMPLIANCE
OPM-0403
By: William Staehlin
DATE: 01-26-2024
CALIFORNIA BUILDING CODE

REGISTERED PROFESSIONAL ENGINEER
MARCIN WASAZNIK
S 6612
STRUCTURAL
STATE OF CALIFORNIA

ISAT
A Division of Tomarco Contractor Specialties

International Seismic Application Technology
14848 Northam Street, La Mirada, CA 90638
877-999-4728 (Toll Free) 714-523-0845 (Fax)
www.isatsb.com

Rev.0
8/03/18
Page
C33-0.5-60
2-Tier

RIGID BRACING REQUIREMENTS [7]

2-TIERED TRAPEZE MOUNTED ELECTRICAL SYSTEMS (Conduit, Cable Tray, Bus Duct, Bus Way) — **MAXIMUM SEISMIC DESIGN FORCE = 0.75 G's**

Requires Use of ISAT Seismic Brackets. Use of Any Non-ISAT Bracket Voids Engineering. — *2013 California Building Code Compliant*

Combined 2-Tier Maximum Trapeze Load (lbs/lf)	Max. Vertical Support Spacing (ft.)	Rod [1] Total Vertical Load (lbs)	Min. [8] Vertical Support Rod Dia. (in.)	TRANSVERSE BRACING REQUIREMENTS: Max. [2] Brace Spacing (ft.)	Brace [3] Reaction P (lbs)	Min. Brace Assembly E - Pages	Min. Brace Anchorage [6]: Form Pour [4] Deck Page D1	Min. Brace Anchorage [6]: Metal [5] Deck Page D2	LONGITUDINAL BRACING REQUIREMENTS: Max. [2] Brace Spacing (ft.)	Brace [3] Reaction P (lbs)	Min. Brace Assembly E - Pages	Min. Brace Anchorage [6]: Form Pour [4] Deck Page D1	Min. Brace Anchorage [6]: Metal [5] Deck Page D2
				1-Way Transverse Brace Pattern (B21.0)					3-Way Transverse, Longitudinal Brace Pattern (B21.2)				
11.0	10	409	3/8	40	191	R38AAEM306	N2	L2	80	248	R38AAEM306	N3	L3
25.0	10	930	1/2	40	433	R12AAEM406	N5	L5	80	563	R12AAEM406	N6	L6
35.0	10	1,301	1/2	40	606	R12AAEM406	N7	L7	80	788	R12AAEM509	N8	L8
50.0	10	1,859	5/8	40	866	R58AAEM506	N9	L9	80	1,126	R58AAEM506	N12	L12
				TRANSVERSE, LONGITUDINAL BRACING REQUIREMENTS									
				2-Way, 4-Way Transverse, Longitudinal Brace Pattern (B21.1, B21.3)									
65.0	10	1,494	1/2	40	732	R12AAEM509	N8	L8					
75.0	10	1,723	5/8	40	844	R58AAEM506	N9	L9					
100.0	10	2,298	5/8	40	1,126	R58AAEM506	N12	L12					
125.0	10	2,606	3/4	34	1,196	R34DGB1P06	N12	L12					
150.0	10	2,808	5/8	28	1,182	R58AAEM506	N12	L12					
175.0	10	3,027	5/8	24	1,182	R58AAEM506	N12	L12					
200.0	10	3,246	5/8	21	1,182	R58AAEM506	N12	L12					
225.0	10	3,492	5/8	19	1,203	R58AAEM506	N13	L13					

1. TVL = DL + Fv + ($0.2S_D$ x 0.70 x Wp). All Terms Are Working Loads. Based On Eccentric Loading, 65% Of Total Load Allocated Per Rod.
2. Reductions In Actual Installed Brace Spacing Will Result In An Equal Percentage Reduction In Brace Reaction. As An Option When This Occurs ISAT May Substitute An Alternate Anchorage From Tables D1 or D2 Which Meets or Exceeds The Lowered Brace Reaction.
3. At Max. 30 Degree Brace Inclination.
4. Min. 3,000 psi NWC. Any "N Series" Connection May Be Utilized Having A Numeric Designation Equal To Or Higher Than That Shown.
5. Min. 3,000 psi NWC or LWC. Any "L Series" Connection May Be Utilized Having A Numeric Designation Equal To Or Higher Than That Shown.
6. As An Alternate, Brace Anchorage Connections To Structure May Be Employed Using Any Detail From Structural Connections Section "D" Series Details Where Assembly Design Value Meets Or Exceeds Brace Reaction.
7. For Trade Specific Bracing Installation Notes, Refer To Page 7.1.
8. Utilize Any "G" Series Vertical Support Connection Having A Design Value Equal To Or Greater Than The Corresponding "Rod Total Vertical Load".

REVIEWED FOR CODE COMPLIANCE
OPM-0403
BY: William Staehlin
DATE: 01-26-2024
CALIFORNIA BUILDING CODE 2022

REGISTERED PROFESSIONAL ENGINEER MARCIN WASAZNIK S 6612 STRUCTURAL STATE OF CALIFORNIA

ISAT
A Division of Tomarco Contractor Specialties
International Seismic Application Technology
14848 Northam Street, La Mirada, CA 90638
877-999-4728 (Toll Free) 714-523-0845 (Fax)
www.isatsb.com

Rev.0
8/03/18
Page
C33-0.75-30
2-Tier

RIGID BRACING REQUIREMENTS [7]

2-TIERED TRAPEZE MOUNTED ELECTRICAL SYSTEMS (Conduit, Cable Tray, Bus Duct, Bus Way) — **MAXIMUM SEISMIC DESIGN FORCE = 0.75 G's**

Requires Use of ISAT Seismic Brackets. Use of Any Non-ISAT Bracket Voids Engineering. — *2013 California Building Code Compliant*

Combined 2-Tier Maximum Trapeze Load (lbs/lf)	Max. Vertical Support Spacing (ft.)	Rod [1] Total Vertical Load (lbs)	Min. [8] Vertical Support Rod Dia. (in.)	TRANSVERSE BRACING REQUIREMENTS					LONGITUDINAL BRACING REQUIREMENTS				
				Max. [2] Brace Spacing (ft.)	Brace [3] Reaction P (lbs)	Min. Brace Assembly E - Pages	Min. Brace Anchorage [6] Form Pour [4] Deck Page D1	Min. Brace Anchorage [6] Metal [5] Deck Page D2	Max. [2] Brace Spacing (ft.)	Brace [3] Reaction P (lbs)	Min. Brace Assembly E - Pages	Min. Brace Anchorage [6] Form Pour [4] Deck Page D1	Min. Brace Anchorage [6] Metal [5] Deck Page D2
				1-Way Transverse Brace Pattern (B20.0)					3-Way Transverse, Longitudinal Brace Pattern (B21.2)				
11.0	10	742	1/2	40	257	R12AAEM306	N3	L3	80	334	R12AAEM406	N4	L4
25.0	10	1,685	3/4	40	583	R34CFB1P12	N6	L6	80	758	R34CFB1P09	N8	L8
				TRANSVERSE, LONGITUDINAL BRACING REQUIREMENTS									
				2-Way, 4-Way Transverse, Longitudinal Brace Pattern (B21.1)									
35.0	10	1,333	5/8	40	531	R58AAEM406	N6	L6					
50.0	10	1,905	3/4	40	758	R34CFB1P09	N8	L8					
65.0	10	2,476	3/4	40	986	R34CFB1P06	N10	L10					
75.0	10	2,582	3/4	35	995	R34CFB1P06	N10	L10					
100.0	10	2,857	3/4	27	1,024	R34CFB1P06	N11	L11					
125.0	10	3,021	3/4	21	995	R34CFB1P06	N10	L10					
150.0	10	3,295	3/4	18	1,024	R34CFB1P06	N11	L11					
175.0	10	3,460	3/4	15	995	R34CFB1P06	N10	L10					
200.0	10	3,807	3/4	14	1,062	R34CFB1P06	N11	L11					
225.0	10	3,953	3/4	12	1,024	R34CFB1P06	N11	L11					

1. TVL = DL + Fv + ($0.2S_D$ x 0.70 x Wp). All Terms Are Working Loads. Based On Eccentric Loading, 65% Of Total Load Allocated Per Rod.
2. Reductions In Actual Installed Brace Spacing Will Result In An Equal Percentage Reduction In Brace Reaction. As An Option When This Occurs ISAT May Substitute An Alternate Anchorage From Tables D1 or D2 Which Meets or Exceeds The Lowered Brace Reaction.
3. At Max. 50 Degree Brace Inclination.
4. Min. 3,000 psi NWC. Any "N Series" Connection May Be Utilized Having A Numeric Designation Equal To Or Higher Than That Shown.
5. Min. 3,000 psi NWC or LWC. Any "L Series" Connection May Be Utilized Having A Numeric Designation Equal To Or Higher Than That Shown.
6. As An Alternate, Brace Anchorage Connections To Structure May Be Employed Using Any Detail From Structural Connections Section "D" Series Details Where Assembly Design Value Meets Or Exceeds Brace Reaction.
7. For Trade Specific Bracing Installation Notes, Refer To Page 7.1.
8. Utilize Any "G" Series Vertical Support Connection Having A Design Value Equal To Or Greater Than The Corresponding "Rod Total Vertical Load".

REVIEWED FOR CODE COMPLIANCE
OPM-0403
By: William Staehlin
DATE: 01-26-2024
CALIFORNIA BUILDING CODE 2019

REGISTERED PROFESSIONAL ENGINEER MARCIN WASAZNIK S-6612 STRUCTURAL STATE OF CALIFORNIA

ISAT
A Division of Tomarco Contractor Specialties
International Seismic Application Technology
14848 Northam Street, La Mirada, CA 90638
877-900-4728 (Toll Free) 714-523-0845 (Fax)
www.isatsb.com

Rev.0
10/19/18
Page
C33-0.75-45
2-Tier

RIGID BRACING REQUIREMENTS [7]

2-TIERED TRAPEZE MOUNTED ELECTRICAL SYSTEMS (Conduit, Cable Tray, Bus Duct, Bus Way) — **MAXIMUM SEISMIC DESIGN FORCE = 0.75 G's**

Requires Use of ISAT Seismic Brackets. Use of Any Non-ISAT Bracket Voids Engineering. — *2013 California Building Code Compliant*

Combined 2-Tier Maximum Trapeze Load (lbs/lf)	Max. Vertical Support Spacing (ft.)	Rod [1] Total Vertical Load (lbs)	Min. [8] Vertical Support Rod Dia. (in.)	TRANSVERSE BRACING REQUIREMENTS					LONGITUDINAL BRACING REQUIREMENTS				
				Max. [2] Brace Spacing (ft.)	Brace [3] Reaction P (lbs)	Min. Brace Assembly E - Pages	Min. Brace Anchorage [6] Form Pour [4] Deck Page D1	Min. Brace Anchorage [6] Metal [5] Deck Page D2	Max. [2] Brace Spacing (ft.)	Brace [3] Reaction P (lbs)	Min. Brace Assembly E - Pages	Min. Brace Anchorage [6] Form Pour [4] Deck Page D1	Min. Brace Anchorage [6] Metal [5] Deck Page D2
				1-Way Transverse Brace Pattern (B21.0)					3-Way Transverse, Longitudinal Brace Pattern (B21.2)				
11.0	10	1,034	1/2	40	330	R12AAEM409	N4	L4	80	429	R12AAEM406	N5	L5
				TRANSVERSE, LONGITUDINAL BRACING REQUIREMENTS									
				2-Way, 4-Way Transverse, Longitudinal Brace Pattern (B21.1, B21.3)									
25.0	10	1,285	5/8	40	488	R58AAEM406	N5	L5					
35.0	10	1,799	3/4	40	683	R34CFB1P09	N7	L7					
50.0	10	2,356	3/4	36	878	R34DGB1P09	N9	L9					
65.0	10	2,509	3/4	28	887	R34DGB1P09	N9	L9					
75.0	10	2,576	3/4	24	878	R34DGB1P09	N9	L9					
100.0	10	2,795	3/4	18	878	R34DGB1P09	N9	L9					
125.0	10	3,094	3/4	15	914	R34DGB1P06	N10	L10					
150.0	10	3,234	3/4	12	878	R34DGB1P09	N9	L9					
175.0	10	3,400	3/4	10	853	R34CFB1P09	N9	L9					

1. TVL = DL + Fv + ($0.2S_D$ x 0.70 x Wp). All Terms Are Working Loads. Based On Eccentric Loading, 65% Of Total Load Allocated Per Rod.
2. Reductions In Actual Installed Brace Spacing Will Result In An Equal Percentage Reduction In Brace Reaction. As An Option When This Occurs ISAT May Substitute An Alternate Anchorage From Tables D1 or D2 Which Meets or Exceeds The Lowered Brace Reaction.
3. At Max. 60 Degree Brace Inclination.
4. Min. 3,000 psi NWC. Any "N Series" Connection May Be Utilized Having A Numeric Designation Equal To Or Higher Than That Shown.
5. Min. 3,000 psi NWC or LWC. Any "L Series" Connection May Be Utilized Having A Numeric Designation Equal To Or Higher Than That Shown.
6. As An Alternate, Brace Anchorage Connections To Structure May Be Employed Using Any Detail From Structural Connections Section "D" Series Details Where Assembly Design Value Meets Or Exceeds Brace Reaction.
7. For Trade Specific Bracing Installation Notes, Refer To Page 7.1.
8. Utilize Any "G" Series Vertical Support Connection Having A Design Value Equal To Or Greater Than The Corresponding "Rod Total Vertical Load".

REVIEWED FOR CODE COMPLIANCE
OPM-0403
BY: William Staehlin
DATE: 01-26-2024
CALIFORNIA BUILDING CODE, 2022

REGISTERED PROFESSIONAL ENGINEER
MARCIN WASAZNIK
S-6612
STRUCTURAL
STATE OF CALIFORNIA

ISAT
A Division of Tomarco Contractor Specialties
International Seismic Application Technology
14848 Northam Street, La Mirada, CA 90638
877-999-4728 (Toll Free) 714-523-0845 (Fax)
www.isatsb.com

Rev.0
8/03/18
Page
C33-0.75-60
2-Tier

RIGID BRACING REQUIREMENTS [7]

2-TIERED TRAPEZE MOUNTED ELECTRICAL SYSTEMS (Conduit, Cable Tray, Bus Duct, Bus Way) — **MAXIMUM SEISMIC DESIGN FORCE = 1.00 G's**

Requires Use of ISAT Seismic Brackets. Use of Any Non-ISAT Bracket Voids Engineering. — *2013 California Building Code Compliant*

Combined 2-Tier Maximum Trapeze Load (lbs/lf)	Max. Vertical Support Spacing (ft.)	Rod [1] Total Vertical Load (lbs)	Min. [8] Vertical Support Rod Dia. (in.)	TRANSVERSE BRACING REQUIREMENTS					LONGITUDINAL BRACING REQUIREMENTS				
				Max. [2] Brace Spacing (ft.)	Brace [3] Reaction P (lbs)	Min. Brace Assembly E - Pages	Min. Brace Anchorage [6] Form Pour [4] Deck Page D1	Min. Brace Anchorage [6] Metal [5] Deck Page D2	Max. [2] Brace Spacing (ft.)	Brace [3] Reaction P (lbs)	Min. Brace Assembly E - Pages	Min. Brace Anchorage [6] Form Pour [4] Deck Page D1	Min. Brace Anchorage [6] Metal [5] Deck Page D2
				1-Way Transverse Brace Pattern (B21.0)					3-Way Transverse, Longitudinal Brace Pattern (B21.2)				
11.0	10	513	1/2	40	254	R12AAEM306	N3	L3	80	330	R12AAEM406	N4	L4
25.0	10	1,166	1/2	40	577	R12AAEM406	N6	L6	80	751	R12AAEM509	N8	L8
35.0	10	1,633	5/8	40	808	R58AAEM506	N9	L9	80	1,051	R58AAEM506	N11	L11
				TRANSVERSE, LONGITUDINAL BRACING REQUIREMENTS									
				2-Way, 4-Way Transverse, Longitudinal Brace Pattern (B21.1, B21.3)									
50.0	10	1,386	1/2	40	751	R12AAEM509	N8	L8					
65.0	10	1,801	5/8	40	976	R58AAEM506	N10	L10					
75.0	10	2,079	5/8	40	1,126	R58AAEM506	N12	L12					
100.0	10	2,345	5/8	31	1,163	R58AAEM506	N12	L12					
125.0	10	2,576	5/8	25	1,173	R58AAEM506	N12	L12					
150.0	10	2,808	5/8	21	1,182	R58AAEM506	N12	L12					
175.0	10	3,027	5/8	18	1,182	R58AAEM506	N12	L12					
200.0	10	3,270	5/8	16	1,201	R58AAEM506	N13	L13					
225.0	10	3,466	5/8	14	1,182	R58AAEM506	N12	L12					

1. TVL = DL + Fv + ($0.2S_D$ x 0.70 x Wp). All Terms Are Working Loads, Based On Eccentric Loading, 65% Of Total Load Allocated Per Rod.
2. Reductions In Actual Installed Brace Spacing Will Result In An Equal Percentage Reduction In Brace Reaction. As An Option When This Occurs ISAT May Substitute An Alternate Anchorage From Tables D1 or D2 Which Meets or Exceeds The Lowered Brace Reaction.
3. At Max. 30 Degree Brace Inclination.
4. Min. 3,000 psi NWC. Any "N Series" Connection May Be Utilized Having A Numeric Designation Equal To Or Higher Than That Shown.
5. Min. 3,000 psi NWC or LWC. Any "L Series" Connection May Be Utilized Having A Numeric Designation Equal To Or Higher Than That Shown.
6. As An Alternate, Brace Anchorage Connections To Structure May Be Employed Using Any Detail From Structural Connections Section "D" Series Details Where Assembly Design Value Meets Or Exceeds Brace Reaction.
7. For Trade Specific Bracing Installation Notes, Refer To Page 7.1.
8. Utilize Any "G" Series Vertical Support Connection Having A Design Value Equal To Or Greater Than The Corresponding "Rod Total Vertical Load".

REVIEWED FOR CODE COMPLIANCE
OPM-0403
By: William Staehlin
DATE: 01-26-2024
CALIFORNIA BUILDING CODE

REGISTERED PROFESSIONAL ENGINEER MARCIN WASAZNIK S 6612 STRUCTURAL STATE OF CALIFORNIA

ISAT
A Division of Tomarco Contractor Specialties
International Seismic Application Technology
14848 Northam Street, La Mirada, CA 90638
877-999-4728 (Toll Free) 714-523-0845 (Fax)
www.isatsb.com

Rev.0
8/03/18
Page
C33-1-30
2-Tier

RIGID BRACING REQUIREMENTS [7]

2-TIERED TRAPEZE MOUNTED ELECTRICAL SYSTEMS (Conduit, Cable Tray, Bus Duct, Bus Way) — **MAXIMUM SEISMIC DESIGN FORCE = 1.00 G's**

Requires Use of ISAT Seismic Brackets. Use of Any Non-ISAT Bracket Voids Engineering. — *2013 California Building Code Compliant*

Combined 2-Tier Maximum Trapeze Load (lbs/lf)	Max. Vertical Support Spacing (ft.)	Rod [1] Total Vertical Load (lbs)	Min. [8] Vertical Support Rod Dia. (in.)	TRANSVERSE BRACING REQUIREMENTS					LONGITUDINAL BRACING REQUIREMENTS				
				Max. [2] Brace Spacing (ft.)	Brace [3] Reaction P (lbs)	Min. Brace Assembly E - Pages	Min. Brace Anchorage [6] Form Pour [4] Deck Page D1	Min. Brace Anchorage [6] Metal [5] Deck Page D2	Max. [2] Brace Spacing (ft.)	Brace [3] Reaction P (lbs)	Min. Brace Assembly E - Pages	Min. Brace Anchorage [6] Form Pour [4] Deck Page D1	Min. Brace Anchorage [6] Metal [5] Deck Page D2
				1-Way Transverse Brace Pattern (B20.0)					3-Way Transverse, Longitudinal Brace Pattern (B21.2)				
11.0	10	957	1/2	40	342	R12AAEM406	N4	L4	80	445	R12AAEM406	N5	L5
25.0	10	2,125	3/4	39	758	R34CFB1P09	N8	L8	78	986	R34CFB1P06	N10	L10
				TRANSVERSE, LONGITUDINAL BRACING REQUIREMENTS									
				2-Way, 4-Way Transverse, Longitudinal Brace Pattern (B21.1)									
35.0	10	1,675	5/8	40	708	R58AAEM509	N8	L8					
50.0	10	2,345	3/4	39	986	R34CFB1P06	N10	L10					
65.0	10	2,476	3/4	30	986	R34CFB1P06	N10	L10					
75.0	10	2,564	3/4	26	986	R34CFB1P06	N10	L10					
100.0	10	2,832	3/4	20	1,011	R34CFB1P06	N11	L11					
125.0	10	3,051	3/4	16	1,011	R34CFB1P06	N11	L11					
150.0	10	3,222	3/4	13	986	R34CFB1P06	N10	L10					
175.0	10	3,417	3/4	11	973	R34CFB1P06	N10	L10					
200.0	10	3,710	3/4	10	1,011	R34CFB1P06	N11	L11					

1. TVL = DL + Fv + ($0.2S_D$ x 0.70 x Wp). All Terms Are Working Loads. Based On Eccentric Loading, 65% Of Total Load Allocated Per Rod.
2. Reductions In Actual Installed Brace Spacing Will Result In An Equal Percentage Reduction In Brace Reaction. As An Option When This Occurs ISAT May Substitute An Alternate Anchorage From Tables D1 or D2 Which Meets or Exceeds The Lowered Brace Reaction.
3. At Max. 50 Degree Brace Inclination.
4. Min. 3,000 psi NWC. Any "N Series" Connection May Be Utilized Having A Numeric Designation Equal To Or Higher Than That Shown.
5. Min. 3,000 psi NWC or LWC. Any "L Series" Connection May Be Utilized Having A Numeric Designation Equal To Or Higher Than That Shown.
6. As An Alternate, Brace Anchorage Connections To Structure May Be Employed Using Any Detail From Structural Connections Section "D" Series Details Where Assembly Design Value Meets Or Exceeds Brace Reaction.
7. For Trade Specific Bracing Installation Notes, Refer To Page 7.1.
8. Utilize Any "G" Series Vertical Support Connection Having A Design Value Equal To Or Greater Than The Corresponding "Rod Total Vertical Load".

REVIEWED FOR CODE COMPLIANCE
OPM-0403
By William Staehlin
DATE: 01-26-2024
CALIFORNIA BUILDING CODE 2022

REGISTERED PROFESSIONAL ENGINEER MARCIN WASAZNIK S 6612 STRUCTURAL STATE OF CALIFORNIA

ISAT
A Division of Tomarco Contractor Specialties
International Seismic Application Technology
14848 Northam Street, La Mirada, CA 90638
877-999-4728 (Toll Free) 714-523-0845 (Fax)
www.isateb.com

Rev.0
10/19/18
Page
C33-1-45
2-Tier

RIGID BRACING REQUIREMENTS [7]

2-TIERED TRAPEZE MOUNTED ELECTRICAL SYSTEMS (Conduit, Cable Tray, Bus Duct, Bus Way) — **MAXIMUM SEISMIC DESIGN FORCE = 1.00 G's**

Requires Use of ISAT Seismic Brackets. Use of Any Non-ISAT Bracket Voids Engineering. — *2013 California Building Code Compliant*

Combined 2-Tier Maximum Trapeze Load (lbs/lf)	Max. Vertical Support Spacing (ft.)	Rod [1] Total Vertical Load (lbs)	Min. [8] Vertical Support Rod Dia. (in.)	TRANSVERSE BRACING REQUIREMENTS					LONGITUDINAL BRACING REQUIREMENTS				
				Max. [2] Brace Spacing (ft.)	Brace [3] Reaction P (lbs)	Min. Brace Assembly E - Pages	Min. Brace Anchorage [6] Form Pour [4] Deck Page D1	Min. Brace Anchorage [6] Metal [5] Deck Page D2	Max. [2] Brace Spacing (ft.)	Brace [3] Reaction P (lbs)	Min. Brace Assembly E - Pages	Min. Brace Anchorage [6] Form Pour [4] Deck Page D1	Min. Brace Anchorage [6] Metal [5] Deck Page D2
				1-Way Transverse Brace Pattern (B21.0)					3-Way Transverse, Longitudinal Brace Pattern (B21.2)				
11.0	10	1,346	5/8	40	440	R58AAEM406	N5	L5	80	572	R58AAEM406	N6	L6
				TRANSVERSE, LONGITUDINAL BRACING REQUIREMENTS									
				2-Way, 4-Way Transverse, Longitudinal Brace Pattern (B21.1, B21.3)									
25.0	10	1,640	3/4	40	650	R34CFB1P12	N7	L7					
35.0	10	2,196	3/4	38	865	R34CFB1P09	N9	L9					
50.0	10	2,356	3/4	27	878	R34DGB1P09	N9	L9					
65.0	10	2,509	3/4	21	887	R34DGB1P09	N9	L9					
75.0	10	2,576	3/4	18	878	R34DGB1P09	N9	L9					
100.0	10	2,724	3/4	13	845	R34CFB1P09	N9	L9					
125.0	10	3,050	3/4	11	894	R34DGB1P09	N9	L9					

1. TVL = DL + Fv + ($0.2S_D$ x 0.70 x Wp). All Terms Are Working Loads. Based On Eccentric Loading, 65% Of Total Load Allocated Per Rod.
2. Reductions In Actual Installed Brace Spacing Will Result In An Equal Percentage Reduction In Brace Reaction. As An Option When This Occurs ISAT May Substitute An Alternate Anchorage From Tables D1 or D2 Which Meets or Exceeds The Lowered Brace Reaction.
3. At Max. 60 Degree Brace Inclination.
4. Min. 3,000 psi NWC. Any "N Series" Connection May Be Utilized Having A Numeric Designation Equal To Or Higher Than That Shown.
5. Min. 3,000 psi NWC or LWC. Any "L Series" Connection May Be Utilized Having A Numeric Designation Equal To Or Higher Than That Shown.
6. As An Alternate, Brace Anchorage Connections To Structure May Be Employed Using Any Detail From Structural Connections Section "D" Series Details Where Assembly Design Value Meets Or Exceeds Brace Reaction.
7. For Trade Specific Bracing Installation Notes, Refer To Page 7.1.
8. Utilize Any "G" Series Vertical Support Connection Having A Design Value Equal To Or Greater Than The Corresponding "Rod Total Vertical Load".

REVIEWED FOR CODE COMPLIANCE
OPM-0403
BY: William Staehlin
DATE: 01-26-2024
CALIFORNIA BUILDING CODE, 2022

REGISTERED PROFESSIONAL ENGINEER
MARCIN WASAZNIK
S-6612
STRUCTURAL
STATE OF CALIFORNIA

ISAT
A Division of Tomarco Contractor Specialties

International Seismic Application Technology
14848 Northam Street, La Mirada, CA 90638
877-999-4728 (Toll Free) 714-523-0845 (Fax)
www.isatsb.com

Rev.0
8/03/18
Page
C33-1-60
2-Tier

CABLE BRACING REQUIREMENTS [7]:

TRAPEZE MOUNTED ELECTRICAL SYSTEMS (Conduit, Cable Tray, Bus Duct, Bus Way) — **MAXIMUM SEISMIC DESIGN FORCE = 0.25 G's**

Requires Use of ISAT Seismic Brackets. Use of Any Non-ISAT Bracket Voids Engineering. — *2013 California Building Code Compliant*

Maximum Trapeze Load (lbs/lf)	Max. Vertical Support Spacing (ft.)	Rod [1, 8] Total Vertical Load (lbs)	Min. [8] Vertical Support Rod Dia. (in.)	TRANSVERSE BRACING REQUIREMENTS					LONGITUDINAL BRACING REQUIREMENTS				
				Max. [2] Brace Spacing (ft.)	Brace [3] Reaction P (lbs)	Min. Brace Assembly E - Pages	Min. Brace Anchorage [6] Form Pour [4] Deck Page D1	Min. Brace Anchorage [6] Metal [5] Deck Page D2	Max. [2] Brace Spacing (ft.)	Brace [3] Reaction P (lbs)	Min. Brace Assembly E - Pages	Min. Brace Anchorage [6] Form Pour [4] Deck Page D1	Min. Brace Anchorage [6] Metal [5] Deck Page D2
				2-Way Transverse Brace Pattern (B24.0, B43.0, B46.0)					6-Way Transverse, Longitudinal Brace Pattern (B24.1, B43.1, B46.1)				
11.0	10	97	3/8	40	127	C38AA04WS	N2	L2	80	165	C38AA04WS	N2	L2
25.0	10	219	1/2	40	289	C12AA04WS	N3	L3	80	375	C12AA04WS	N4	L4
35.0	10	307	1/2	40	404	C12AA04WS	N5	L5	80	525	C12AA04WS	N6	L6
50.0	10	439	1/2	40	577	C12AA04WS	N6	L6	80	751	C12AA06WS	N8	L8
65.0	10	570	1/2	40	751	C12AA06WS	N8	L8	80	976	C12AA06WS	N10	L10
75.0	10	658	1/2	40	866	C12AA06WS	N9	L9	80	1,126	C12AA06WS	N12	L12
100.0	10	878	1/2	38	1,097	C12AA06WS	N11	L11	76	1,426	C12AA06WS	N15	L15
125.0	10	1,097	1/2	30	1,083	C12AA06WS	N11	L11	60	1,407	C12AA06WS	N15	L15
150.0	10	1,316	1/2	24	1,039	C12AA06WS	N11	L11	48	1,351	C12AA06WS	N14	L14
175.0	10	1,536	1/2	22	1,111	C12AA06WS	N12	L12	44	1,445	C12AA06WS	N15	L15
200.0	10	1,755	1/2	18	1,039	C12AA06WS	N11	L11	36	1,351	C12AA06WS	N14	L14
225.0	10	1,974	1/2	16	1,039	C12AA06WS	N11	L11	32	1,351	C12AA06WS	N14	L14

1. TVL = DL + Fv + ($0.2S_{DS}$ x 0.70 x Wp). All Terms Are Working Loads. Based On Eccentric Loading, 65% Of Total Load Allocated Per Rod.
2. Reductions In Actual Installed Brace Spacing Will Result In An Equal Percentage Reduction In Brace Reaction. As An Option When This Occurs ISAT May Substitute An Alternate Anchorage From Tables D1 or D2 Which Meets or Exceeds The Lowered Brace Reaction.
3. At Max. 30 Degree Brace Inclination.
4. Min. 3,000 psi NWC. Any "N Series" Connection May Be Utilized Having A Numeric Designation Equal To Or Higher Than That Shown.
5. Min. 3,000 psi NWC or LWC. Any "L Series" Connection May Be Utilized Having A Numeric Designation Equal To Or Higher Than That Shown.
6. As An Alternate, Brace Anchorage Connections To Structure May Be Employed Using Any Detail From Structural Connections Section "D" Series Details Where Assembly Design Value Meets Or Exceeds Brace Reaction.
7. For Trade Specific Bracing Installation Notes, Refer To Page 7.1.
8. Utilize Any "G" Series Vertical Support Connection Having A Design Value Equal To Or Greater Than The Corresponding "Rod Total Vertical Load".

REVIEWED FOR CODE COMPLIANCE
OPM-0403
By: William Staehlin
DATE: 01-26-2024
CALIFORNIA BUILDING CODE 2022

REGISTERED PROFESSIONAL ENGINEER MARCIN WASAZNIK S-6612 STRUCTURAL STATE OF CALIFORNIA

ISAT
A Division of Tomarco Contractor Specialties
International Seismic Application Technology
14848 Northam Street, La Mirada, CA 90638
877-999-4728 (Toll Free) 714-523-0845 (Fax)
www.isatsb.com

Rev. 0
08/03/18
Page
C34-0.25-30

CABLE BRACING REQUIREMENTS [7]:

TRAPEZE MOUNTED ELECTRICAL SYSTEMS (Conduit, Cable Tray, Bus Duct, Bus Way) — **MAXIMUM SEISMIC DESIGN FORCE = 0.25 G's**

Requires Use of ISAT Seismic Brackets. Use of Any Non-ISAT Bracket Voids Engineering. — *2013 California Building Code Compliant*

Maximum Trapeze Load (lbs/lf)	Max. Vertical Support Spacing (ft.)	Rod [1, 8] Total Vertical Load (lbs)	Min. [8] Vertical Support Rod Dia. (in.)	TRANSVERSE BRACING REQUIREMENTS					LONGITUDINAL BRACING REQUIREMENTS				
				Max. [2] Brace Spacing (ft.)	Brace [3] Reaction P (lbs)	Min. Brace Assembly E - Pages	Min. Brace Anchorage [6] Form Pour [4] Deck Page D1	Min. Brace Anchorage [6] Metal [5] Deck Page D2	Max. [2] Brace Spacing (ft.)	Brace [3] Reaction P (lbs)	Min. Brace Assembly E - Pages	Min. Brace Anchorage [6] Form Pour [4] Deck Page D1	Min. Brace Anchorage [6] Metal [5] Deck Page D2
				2-Way Transverse Brace Pattern (B24.0, B43.0, B46.0)					6-Way Transverse, Longitudinal Brace Pattern (B24.1, B43.1, B46.1)				
11.0	10	97	3/8	40	171	C38AA04WS	N2	L2	80	222	C38AA04WS	N3	L3
25.0	10	219	1/2	40	389	C12AA04WS	N4	L4	80	506	C12AA04WS	N6	L6
35.0	10	307	1/2	40	545	C12AA04WS	N6	L6	80	708	C12AA06WS	N8	L8
50.0	10	439	1/2	40	778	C12AA06WS	N8	L8	80	1,011	C12AA06WS	N11	L11
65.0	10	570	5/8	40	1,011	C58AA06WS	N11	L11	80	1,315	C58AA06WS	N14	L14
75.0	10	658	3/4	40	1,167	C34DG06WS	N12	L12	80	1,517	C34DG06TS	N16	L16
100.0	10	878	5/8	30	1,167	C58AA06WS	N12	L12	60	1,517	C58DG06TS	N16	L16
125.0	10	1,097	5/8	24	1,167	C58AA06WS	N12	L12	48	1,517	C58DG06TS	N16	L16
150.0	10	1,316	5/8	20	1,167	C58AA06WS	N12	L12	40	1,517	C58DG06TS	N16	L16
175.0	10	1,536	5/8	16	1,089	C58AA06WS	N11	L11	32	1,416	C58AA06WS	N15	L15
200.0	10	1,755	5/8	14	1,089	C58AA06WS	N11	L11	28	1,416	C58AA06WS	N15	L15
225.0	10	1,974	5/8	14	1,225	C58AA06WS	N13	L13	28	1,593	C58DG06TS	N16	L16

1. TVL = DL + Fv + ($0.2S_{DS}$ x 0.70 x Wp). All Terms Are Working Loads. Based On Eccentric Loading, 65% Of Total Load Allocated Per Rod.
2. Reductions In Actual Installed Brace Spacing Will Result In An Equal Percentage Reduction In Brace Reaction. As An Option When This Occurs ISAT May Substitute An Alternate Anchorage From Tables D1 or D2 Which Meets or Exceeds The Lowered Brace Reaction.
3. At Max. 50 Degree Brace Inclination.
4. Min. 3,000 psi NWC. Any "N Series" Connection May Be Utilized Having A Numeric Designation Equal To Or Higher Than That Shown.
5. Min. 3,000 psi NWC or LWC. Any "L Series" Connection May Be Utilized Having A Numeric Designation Equal To Or Higher Than That Shown.
6. As An Alternate, Brace Anchorage Connections To Structure May Be Employed Using Any Detail From Structural Connections Section "D" Series Details Where Assembly Design Value Meets Or Exceeds Brace Reaction.
7. For Trade Specific Bracing Installation Notes, Refer To Page 7.1.
8. Utilize Any "G" Series Vertical Support Connection Having A Design Value Equal To Or Greater Than The Corresponding "Rod Total Vertical Load".

REVIEWED FOR CODE COMPLIANCE
OPM 0403
BY: William Staehlin
DATE: 01-26-2024
CALIFORNIA BUILDING CODE, 2022

REGISTERED PROFESSIONAL ENGINEER MARCIN WASAZNIK S-6612 STRUCTURAL STATE OF CALIFORNIA

ISAT
A Division of Tomarco Contractor Specialties
International Seismic Application Technology
14848 Northam Street, La Mirada, CA 90638
877-999-4728 (Toll Free) 714-523-0845 (Fax)
www.isatsb.com

Rev. 1
03/12/19
Page
C34-0.25-45

CABLE BRACING REQUIREMENTS [7]:

TRAPEZE MOUNTED ELECTRICAL SYSTEMS (Conduit, Cable Tray, Bus Duct, Bus Way) — **MAXIMUM SEISMIC DESIGN FORCE = 0.25 G's**

Requires Use of ISAT Seismic Brackets. Use of Any Non-ISAT Bracket Voids Engineering. — *2013 California Building Code Compliant*

Maximum Trapeze Load (lbs/lf)	Max. Vertical Support Spacing (ft.)	Rod [1, 8] Total Vertical Load (lbs)	Min. [8] Vertical Support Rod Dia. (in.)	TRANSVERSE BRACING REQUIREMENTS					LONGITUDINAL BRACING REQUIREMENTS				
				Max. [2] Brace Spacing (ft.)	Brace [3] Reaction P (lbs)	Min. Brace Assembly E - Pages	Min. Brace Anchorage [6] Form Pour [4] Deck Page D1	Min. Brace Anchorage [6] Metal [5] Deck Page D2	Max. [2] Brace Spacing (ft.)	Brace [3] Reaction P (lbs)	Min. Brace Assembly E - Pages	Min. Brace Anchorage [6] Form Pour [4] Deck Page D1	Min. Brace Anchorage [6] Metal [5] Deck Page D2
				2-Way Transverse Brace Pattern (B24.0, B43.0, B46.0)					6-Way Transverse, Longitudinal Brace Pattern (B24.1, B43.1, B46.1)				
11.0	10	97	3/8	40	220	C38AA04WS	N3	L3	80	286	C38AA04WS	N3	L3
25.0	10	219	1/2	40	500	C12AA04WS	N5	L5	80	650	C12AA04WS	N7	L7
35.0	10	307	1/2	40	700	C12AA06WS	N7	L7	80	910	C12AA06WS	N10	L10
50.0	10	439	5/8	40	1,000	C58AA06WS	N10	L10	80	1,300	C58AA06WS	N13	L13
65.0	10	570	3/4	35	1,138	C34DG06WS	N12	L12	70	1,479	C34DG06WS	N15	L15
75.0	10	658	3/4	30	1,125	C34DG06WS	N12	L12	60	1,463	C34DG06WS	N15	L15
100.0	10	878	3/4	22	1,100	C34DG06WS	N11	L11	44	1,430	C34DG06WS	N15	L15
125.0	10	1,097	3/4	18	1,125	C34DG06WS	N12	L12	36	1,463	C34DG06WS	N15	L15
150.0	10	1,316	3/4	15	1,125	C34DG06WS	N12	L12	30	1,463	C34DG06WS	N15	L15
175.0	10	1,536	5/8	12	1,050	C58AA06WS	N11	L11	24	1,365	C58AA06WS	N14	L14
200.0	10	1,755	5/8	10	1,000	C58AA06WS	N10	L10	20	1,300	C58AA06WS	N13	L13

1. TVL = DL + Fv + ($0.2S_{DS}$ x 0.70 x Wp). All Terms Are Working Loads. Based On Eccentric Loading, 65% Of Total Load Allocated Per Rod.
2. Reductions In Actual Installed Brace Spacing Will Result In An Equal Percentage Reduction In Brace Reaction. As An Option When This Occurs ISAT May Substitute An Alternate Anchorage From Tables D1 or D2 Which Meets or Exceeds The Lowered Brace Reaction.
3. At Max. 60 Degree Brace Inclination.
4. Min. 3,000 psi NWC. Any "N Series" Connection May Be Utilized Having A Numeric Designation Equal To Or Higher Than That Shown.
5. Min. 3,000 psi NWC or LWC. Any "L Series" Connection May Be Utilized Having A Numeric Designation Equal To Or Higher Than That Shown.
6. As An Alternate, Brace Anchorage Connections To Structure May Be Employed Using Any Detail From Structural Connections Section "D" Series Details Where Assembly Design Value Meets Or Exceeds Brace Reaction.
7. For Trade Specific Bracing Installation Notes, Refer To Page 7.1.
8. Utilize Any "G" Series Vertical Support Connection Having A Design Value Equal To Or Greater Than The Corresponding "Rod Total Vertical Load".

REVIEWED FOR CODE COMPLIANCE
OPM-0403
BY: William Staehlin
DATE: 01-26-2024
CALIFORNIA BUILDING CODE, 2019

REGISTERED PROFESSIONAL ENGINEER MARCIN WASAZNIK S 6612 STRUCTURAL STATE OF CALIFORNIA

ISAT
A Division of Tomarco Contractor Specialties

International Seismic Application Technology
14848 Northam Street, La Mirada, CA 90638
877-999-4728 (Toll Free) 714-523-0845 (Fax)
www.isatsb.com

Rev. 2
03/12/19
Page
C34-0.25-60

CABLE BRACING REQUIREMENTS [7]:

TRAPEZE MOUNTED ELECTRICAL SYSTEMS (Conduit, Cable Tray, Bus Duct, Bus Way) — **MAXIMUM SEISMIC DESIGN FORCE = 0.50 G's**

Requires Use of ISAT Seismic Brackets. Use of Any Non-ISAT Bracket Voids Engineering. — *2013 California Building Code Compliant*

Maximum Trapeze Load (lbs/lf)	Max. Vertical Support Spacing (ft.)	Rod [1, 8] Total Vertical Load (lbs)	Min. [8] Vertical Support Rod Dia. (in.)	TRANSVERSE BRACING REQUIREMENTS					LONGITUDINAL BRACING REQUIREMENTS				
				Max. [2] Brace Spacing (ft.)	Brace [3] Reaction P (lbs)	Min. Brace Assembly E - Pages	Min. Brace Anchorage [6] Form Pour [4] Deck Page D1	Min. Brace Anchorage [6] Metal [5] Deck Page D2	Max. [2] Brace Spacing (ft.)	Brace [3] Reaction P (lbs)	Min. Brace Assembly E - Pages	Min. Brace Anchorage [6] Form Pour [4] Deck Page D1	Min. Brace Anchorage [6] Metal [5] Deck Page D2
				2-Way Transverse Brace Pattern (B24.0, B43.0, B46.0)					6-Way Transverse, Longitudinal Brace Pattern (B24.1, B43.1, B46.1)				
11.0	10	97	3/8	40	254	C38AA04WS	N3	L3	80	330	C38AA04WS	N4	L4
25.0	10	219	1/2	40	577	C12AA04WS	N6	L6	80	751	C12AA06WS	N8	L8
35.0	10	307	1/2	40	808	C12AA06WS	N9	L9	80	1,051	C12AA06WS	N11	L11
50.0	10	439	1/2	38	1,097	C12AA06WS	N11	L11	76	1,426	C12AA06WS	N15	L15
65.0	10	570	1/2	28	1,051	C12AA06WS	N11	L11	56	1,366	C12AA06WS	N14	L14
75.0	10	658	1/2	24	1,039	C12AA06WS	N11	L11	48	1,351	C12AA06WS	N14	L14
100.0	10	878	1/2	18	1,039	C12AA06WS	N11	L11	36	1,351	C12AA06WS	N14	L14
125.0	10	1,097	1/2	14	1,010	C12AA06WS	N11	L11	28	1,313	C12AA06WS	N14	L14
150.0	10	1,316	1/2	12	1,039	C12AA06WS	N11	L11	24	1,351	C12AA06WS	N14	L14
175.0	10	1,536	1/2	10	1,010	C12AA06WS	N11	L11	20	1,313	C12AA06WS	N14	L14

1. TVL = DL + Fv + ($0.2S_{DS}$ x 0.70 x Wp). All Terms Are Working Loads. Based On Eccentric Loading, 65% Of Total Load Allocated Per Rod.
2. Reductions In Actual Installed Brace Spacing Will Result In An Equal Percentage Reduction In Brace Reaction. As An Option When This Occurs ISAT May Substitute An Alternate Anchorage From Tables D1 or D2 Which Meets or Exceeds The Lowered Brace Reaction.
3. At Max. 30 Degree Brace Inclination.
4. Min. 3,000 psi NWC. Any "N Series" Connection May Be Utilized Having A Numeric Designation Equal To Or Higher Than That Shown.
5. Min. 3,000 psi NWC or LWC. Any "L Series" Connection May Be Utilized Having A Numeric Designation Equal To Or Higher Than That Shown.
6. As An Alternate, Brace Anchorage Connections To Structure May Be Employed Using Any Detail From Structural Connections Section "D" Series Details Where Assembly Design Value Meets Or Exceeds Brace Reaction.
7. For Trade Specific Bracing Installation Notes, Refer To Page 7.1.
8. Utilize Any "G" Series Vertical Support Connection Having A Design Value Equal To Or Greater Than The Corresponding "Rod Total Vertical Load".

REVIEWED FOR CODE COMPLIANCE
OPM-0403
BY: William Staehlin
DATE: 01-26-2024
CALIFORNIA BUILDING CODE, 2022

REGISTERED PROFESSIONAL ENGINEER
MARCIN WASAZNIK
S-6612
STRUCTURAL
STATE OF CALIFORNIA

ISAT
A Division of Tomarco Contractor Specialties
International Seismic Application Technology
14848 Northam Street, La Mirada, CA 90638
877-999-4728 (Toll Free) 714-523-0845 (Fax)
www.isatsb.com

Rev. 0
08/03/18
Page
C34-0.5-30

CABLE BRACING REQUIREMENTS [7]:

TRAPEZE MOUNTED ELECTRICAL SYSTEMS (Conduit, Cable Tray, Bus Duct, Bus Way) — **MAXIMUM SEISMIC DESIGN FORCE = 0.50 G's**

Requires Use of ISAT Seismic Brackets. Use of Any Non-ISAT Bracket Voids Engineering. — *2013 California Building Code Compliant*

Maximum Trapeze Load (lbs/lf)	Max. Vertical Support Spacing (ft.)	Rod [1, 8] Total Vertical Load (lbs)	Min. [8] Vertical Support Rod Dia. (in.)	TRANSVERSE BRACING REQUIREMENTS					LONGITUDINAL BRACING REQUIREMENTS				
				Max. [2] Brace Spacing (ft.)	Brace [3] Reaction P (lbs)	Min. Brace Assembly E - Pages	Min. Brace Anchorage [6] Form Pour [4] Deck Page D1	Min. Brace Anchorage [6] Metal [5] Deck Page D2	Max. [2] Brace Spacing (ft.)	Brace [3] Reaction P (lbs)	Min. Brace Assembly E - Pages	Min. Brace Anchorage [6] Form Pour [4] Deck Page D1	Min. Brace Anchorage [6] Metal [5] Deck Page D2
				2-Way Transverse Brace Pattern (B24.0, B43.0, B46.0)					6-Way Transverse, Longitudinal Brace Pattern (B24.1, B43.1, B46.1)				
11.0	10	97	1/2	40	342	C12AA04WS	N4	L4	80	445	C12AA04WS	N5	L5
25.0	10	219	1/2	40	778	C12AA06WS	N8	L8	80	1,011	C12AA06WS	N11	L11
35.0	10	307	5/8	40	1,089	C58AA06WS	N11	L11	80	1,416	C58AA06WS	N15	L15
50.0	10	439	3/4	30	1,167	C34DG06WS	N12	L12	60	1,517	C34DG06TS	N16	L16
65.0	10	570	5/8	22	1,112	C58AA06WS	N12	L12	44	1,446	C58AA06WS	N15	L15
75.0	10	658	3/4	20	1,167	C34DG06WS	N12	L12	40	1,517	C34DG06TS	N16	L16
100.0	10	878	5/8	14	1,089	C58AA06WS	N11	L11	28	1,416	C58AA06WS	N15	L15
125.0	10	1,097	5/8	12	1,167	C58AA06WS	N12	L12	24	1,517	C58DG06TS	N16	L16
150.0	10	1,316	5/8	10	1,167	C58AA06WS	N12	L12	20	1,517	C58DG06TS	N16	L16

1. TVL = DL + Fv + ($0.2S_{DS}$ x 0.70 x Wp). All Terms Are Working Loads. Based On Eccentric Loading, 65% Of Total Load Allocated Per Rod.
2. Reductions In Actual Installed Brace Spacing Will Result In An Equal Percentage Reduction In Brace Reaction. As An Option When This Occurs ISAT May Substitute An Alternate Anchorage From Tables D1 or D2 Which Meets or Exceeds The Lowered Brace Reaction.
3. At Max. 50 Degree Brace Inclination.
4. Min. 3,000 psi NWC. Any "N Series" Connection May Be Utilized Having A Numeric Designation Equal To Or Higher Than That Shown.
5. Min. 3,000 psi NWC or LWC. Any "L Series" Connection May Be Utilized Having A Numeric Designation Equal To Or Higher Than That Shown.
6. As An Alternate, Brace Anchorage Connections To Structure May Be Employed Using Any Detail From Structural Connections Section "D" Series Details Where Assembly Design Value Meets Or Exceeds Brace Reaction.
7. For Trade Specific Bracing Installation Notes, Refer To Page 7.1.
8. Utilize Any "G" Series Vertical Support Connection Having A Design Value Equal To Or Greater Than The Corresponding "Rod Total Vertical Load".

REVIEWED FOR CODE COMPLIANCE
OPM 0403
BY: William Staehlin
DATE: 01-26-2024
CALIFORNIA BUILDING CODE, 2022

REGISTERED PROFESSIONAL ENGINEER
MARCIN WASAZNIK
S 6612
STRUCTURAL
STATE OF CALIFORNIA

ISAT
A Division of Tomarco Contractor Specialties
International Seismic Application Technology
14848 Northam Street, La Mirada, CA 90638
877-999-4728 (Toll Free) 714-523-0845 (Fax)
www.isatsb.com

Rev. 1
03/12/19
Page
C34-0.5-45

CABLE BRACING REQUIREMENTS [7]:

TRAPEZE MOUNTED ELECTRICAL SYSTEMS (Conduit, Cable Tray, Bus Duct, Bus Way) — **MAXIMUM SEISMIC DESIGN FORCE = 0.50 G's**

Requires Use of ISAT Seismic Brackets. Use of Any Non-ISAT Bracket Voids Engineering. — *2013 California Building Code Compliant*

Maximum Trapeze Load (lbs/lf)	Max. Vertical Support Spacing (ft.)	Rod [1, 8] Total Vertical Load (lbs)	Min. [8] Vertical Support Rod Dia. (in.)	TRANSVERSE BRACING REQUIREMENTS					LONGITUDINAL BRACING REQUIREMENTS				
				Max. [2] Brace Spacing (ft.)	Brace [3] Reaction P (lbs)	Min. Brace Assembly E - Pages	Min. Brace Anchorage [6] Form Pour [4] Deck Page D1	Min. Brace Anchorage [6] Metal [5] Deck Page D2	Max. [2] Brace Spacing (ft.)	Brace [3] Reaction P (lbs)	Min. Brace Assembly E - Pages	Min. Brace Anchorage [6] Form Pour [4] Deck Page D1	Min. Brace Anchorage [6] Metal [5] Deck Page D2
				2-Way Transverse Brace Pattern (B24.0, B43.0, B46.0)					6-Way Transverse, Longitudinal Brace Pattern (B24.1, B43.1, B46.1)				
11.0	10	97	1/2	40	440	C12AA04WS	N5	L5	80	572	C12AA04WS	N6	L6
25.0	10	219	3/4	40	1,000	C34DG06WS	N10	L10	80	1,300	C34DG06WS	N13	L13
35.0	10	307	3/4	32	1,120	C34DG06WS	N12	L12	64	1,456	C34DG06WS	N15	L15
50.0	10	439	3/4	22	1,100	C34DG06WS	N11	L11	44	1,430	C34DG06WS	N15	L15
65.0	10	570	3/4	17	1,105	C34DG06WS	N12	L12	34	1,437	C34DG06WS	N15	L15
75.0	10	658	3/4	15	1,125	C34DG06WS	N12	L12	30	1,463	C34DG06WS	N15	L15
100.0	10	878	3/4	11	1,100	C34DG06WS	N11	L11	22	1,430	C34DG06WS	N15	L15

1. TVL = DL + Fv + ($0.2S_{DS}$ x 0.70 x Wp). All Terms Are Working Loads. Based On Eccentric Loading, 65% Of Total Load Allocated Per Rod.
2. Reductions In Actual Installed Brace Spacing Will Result In An Equal Percentage Reduction In Brace Reaction. As An Option When This Occurs ISAT May Substitute An Alternate Anchorage From Tables D1 or D2 Which Meets or Exceeds The Lowered Brace Reaction.
3. At Max. 60 Degree Brace Inclination.
4. Min. 3,000 psi NWC. Any "N Series" Connection May Be Utilized Having A Numeric Designation Equal To Or Higher Than That Shown.
5. Min. 3,000 psi NWC or LWC. Any "L Series" Connection May Be Utilized Having A Numeric Designation Equal To Or Higher Than That Shown.
6. As An Alternate, Brace Anchorage Connections To Structure May Be Employed Using Any Detail From Structural Connections Section "D" Series Details Where Assembly Design Value Meets Or Exceeds Brace Reaction.
7. For Trade Specific Bracing Installation Notes, Refer To Page 7.1.
8. Utilize Any "G" Series Vertical Support Connection Having A Design Value Equal To Or Greater Than The Corresponding "Rod Total Vertical Load".

REVIEWED FOR CODE COMPLIANCE
OPM-0403
BY: William Staehlin
DATE: 01-26-2024
CALIFORNIA BUILDING CODE, 2022

REGISTERED PROFESSIONAL ENGINEER
MARCIN WASAZNIK
S-6612
STRUCTURAL
STATE OF CALIFORNIA

ISAT
A Division of Tomarco Contractor Specialties
International Seismic Application Technology
14848 Northam Street, La Mirada, CA 90638
877-999-4728 (Toll Free) 714-523-0845 (Fax)
www.isatsb.com

Rev. 2
03/12/19
Page
C34-0.5-60

CABLE BRACING REQUIREMENTS [7]:

TRAPEZE MOUNTED ELECTRICAL SYSTEMS (Conduit, Cable Tray, Bus Duct, Bus Way) — **MAXIMUM SEISMIC DESIGN FORCE = 0.75 G's**

Requires Use of ISAT Seismic Brackets. Use of Any Non-ISAT Bracket Voids Engineering. — *2013 California Building Code Compliant*

				TRANSVERSE BRACING REQUIREMENTS					LONGITUDINAL BRACING REQUIREMENTS				
Maximum Trapeze Load (lbs/lf)	Max. Vertical Support Spacing (ft.)	Rod [1, 8] Total Vertical Load (lbs)	Min. [8] Vertical Support Rod Dia. (in.)	Max. [2] Brace Spacing (ft.)	Brace [3] Reaction P (lbs)	Min. Brace Assembly E - Pages	Min. Brace Anchorage [6] Form Pour [4] Deck Page D1	Min. Brace Anchorage [6] Metal [5] Deck Page D2	Max. [2] Brace Spacing (ft.)	Brace [3] Reaction P (lbs)	Min. Brace Assembly E - Pages	Min. Brace Anchorage [6] Form Pour [4] Deck Page D1	Min. Brace Anchorage [6] Metal [5] Deck Page D2
				2-Way Transverse Brace Pattern (B24.0, B43.0, B46.0)					6-Way Transverse, Longitudinal Brace Pattern (B24.1, B43.1, B46.1)				
11.0	10	97	3/8	40	381	C38AA04WS	N4	L4	80	495	C38AA04WS	N5	L5
25.0	10	219	1/2	40	866	C12AA06WS	N9	L9	80	1,126	C12AA06WS	N12	L12
35.0	10	307	1/2	36	1,091	C12AA06WS	N11	L11	72	1,419	C12AA06WS	N15	L15
50.0	10	439	1/2	24	1,039	C12AA06WS	N11	L11	48	1,351	C12AA06WS	N14	L14
65.0	10	570	1/2	18	1,013	C12AA06WS	N11	L11	36	1,317	C12AA06WS	N14	L14
75.0	10	658	1/2	16	1,039	C12AA06WS	N11	L11	32	1,351	C12AA06WS	N14	L14
100.0	10	878	1/2	12	1,039	C12AA06WS	N11	L11	24	1,351	C12AA06WS	N14	L14
125.0	10	1,097	1/2	10	1,083	C12AA06WS	N11	L11	20	1,407	C12AA06WS	N15	L15

1. TVL = DL + Fv + ($0.2S_{DS}$ x 0.70 x Wp). All Terms Are Working Loads. Based On Eccentric Loading, 65% Of Total Load Allocated Per Rod.
2. Reductions In Actual Installed Brace Spacing Will Result In An Equal Percentage Reduction In Brace Reaction. As An Option When This Occurs ISAT May Substitute An Alternate Anchorage From Tables D1 or D2 Which Meets or Exceeds The Lowered Brace Reaction.
3. At Max. 30 Degree Brace Inclination.
4. Min. 3,000 psi NWC. Any "N Series" Connection May Be Utilized Having A Numeric Designation Equal To Or Higher Than That Shown.
5. Min. 3,000 psi NWC or LWC. Any "L Series" Connection May Be Utilized Having A Numeric Designation Equal To Or Higher Than That Shown.
6. As An Alternate, Brace Anchorage Connections To Structure May Be Employed Using Any Detail From Structural Connections Section "D" Series Details Where Assembly Design Value Meets Or Exceeds Brace Reaction.
7. For Trade Specific Bracing Installation Notes, Refer To Page 7.1.
8. Utilize Any "G" Series Vertical Support Connection Having A Design Value Equal To Or Greater Than The Corresponding "Rod Total Vertical Load".

REVIEWED FOR CODE COMPLIANCE
OPM-0403
BY: William Staehlin
DATE: 01-26-2024
CALIFORNIA BUILDING CODE, 2022

REGISTERED PROFESSIONAL ENGINEER MARCIN WASAZNIK S-6612 STRUCTURAL STATE OF CALIFORNIA

ISAT
A Division of Tomarco Contractor Specialties
International Seismic Application Technology
14848 Northam Street, La Mirada, CA 90638
877-999-4728 (Toll Free) 714-523-0845 (Fax)
www.isatsb.com

Rev. 0
08/03/18
Page
C34-0.75-30

CABLE BRACING REQUIREMENTS [7]:

TRAPEZE MOUNTED ELECTRICAL SYSTEMS (Conduit, Cable Tray, Bus Duct, Bus Way) — **MAXIMUM SEISMIC DESIGN FORCE = 0.75 G's**

Requires Use of ISAT Seismic Brackets. Use of Any Non-ISAT Bracket Voids Engineering. — *2013 California Building Code Compliant*

Maximum Trapeze Load (lbs/lf)	Max. Vertical Support Spacing (ft.)	Rod [1, 8] Total Vertical Load (lbs)	Min. [8] Vertical Support Rod Dia. (in.)	TRANSVERSE BRACING REQUIREMENTS					LONGITUDINAL BRACING REQUIREMENTS				
				Max. [2] Brace Spacing (ft.)	Brace [3] Reaction P (lbs)	Min. Brace Assembly E - Pages	Min. Brace Anchorage [6] Form Pour [4] Deck Page D1	Min. Brace Anchorage [6] Metal [5] Deck Page D2	Max. [2] Brace Spacing (ft.)	Brace [3] Reaction P (lbs)	Min. Brace Assembly E - Pages	Min. Brace Anchorage [6] Form Pour [4] Deck Page D1	Min. Brace Anchorage [6] Metal [5] Deck Page D2
				2-Way Transverse Brace Pattern (B24.0, B43.0, B46.0)					6-Way Transverse, Longitudinal Brace Pattern (B24.1, B43.1, B46.1)				
11.0	10	97	1/2	40	513	C12AA04WS	N6	L6	80	667	C12AA04WS	N7	L7
25.0	10	219	3/4	40	1,167	C34DG06WS	N12	L12	80	1,517	C34DG06TS	N16	L16
35.0	10	307	3/4	28	1,143	C34DG06WS	N12	L12	56	1,486	C34DG06TS	N15	L15
50.0	10	439	3/4	20	1,167	C34DG06WS	N12	L12	40	1,517	C34DG06TS	N16	L16
65.0	10	570	5/8	14	1,062	C58AA06WS	N11	L11	28	1,380	C58AA06WS	N14	L14
75.0	10	658	5/8	12	1,050	C58AA06WS	N11	L11	24	1,365	C58AA06WS	N14	L14
100.0	10	878	5/8	10	1,167	C58AA06WS	N12	L12	20	1,517	C58DG06TS	N16	L16

1. TVL = DL + Fv + ($0.2S_{DS}$ x 0.70 x Wp). All Terms Are Working Loads. Based On Eccentric Loading, 65% Of Total Load Allocated Per Rod.
2. Reductions In Actual Installed Brace Spacing Will Result In An Equal Percentage Reduction In Brace Reaction. As An Option When This Occurs ISAT May Substitute An Alternate Anchorage From Tables D1 or D2 Which Meets or Exceeds The Lowered Brace Reaction.
3. At Max. 50 Degree Brace Inclination.
4. Min. 3,000 psi NWC. Any "N Series" Connection May Be Utilized Having A Numeric Designation Equal To Or Higher Than That Shown.
5. Min. 3,000 psi NWC or LWC. Any "L Series" Connection May Be Utilized Having A Numeric Designation Equal To Or Higher Than That Shown.
6. As An Alternate, Brace Anchorage Connections To Structure May Be Employed Using Any Detail From Structural Connections Section "D" Series Details Where Assembly Design Value Meets Or Exceeds Brace Reaction.
7. For Trade Specific Bracing Installation Notes, Refer To Page 7.1.
8. Utilize Any "G" Series Vertical Support Connection Having A Design Value Equal To Or Greater Than The Corresponding "Rod Total Vertical Load".

REVIEWED FOR CODE COMPLIANCE BY: William Staehlin DATE: 01-26-2024 OPM-0403 CALIFORNIA BUILDING CODE, 2022

REGISTERED PROFESSIONAL ENGINEER MARCIN WASAZNIK S 6612 STRUCTURAL STATE OF CALIFORNIA

ISAT
A Division of Tomarco Contractor Specialties
International Seismic Application Technology
14848 Northam Street, La Mirada, CA 90638
877-999-4728 (Toll Free) 714-523-0845 (Fax)
www.isatsb.com

Rev. 1
03/12/19
Page
C34-0.75-45

CABLE BRACING REQUIREMENTS [7]:

TRAPEZE MOUNTED ELECTRICAL SYSTEMS (Conduit, Cable Tray, Bus Duct, Bus Way) — **MAXIMUM SEISMIC DESIGN FORCE = 0.75 G's**

Requires Use of ISAT Seismic Brackets. Use of Any Non-ISAT Bracket Voids Engineering. — *2013 California Building Code Compliant*

Maximum Trapeze Load (lbs/lf)	Max. Vertical Support Spacing (ft.)	Rod [1, 8] Total Vertical Load (lbs)	Min. [8] Vertical Support Rod Dia. (in.)	TRANSVERSE BRACING REQUIREMENTS					LONGITUDINAL BRACING REQUIREMENTS				
				Max. [2] Brace Spacing (ft.)	Brace [3] Reaction P (lbs)	Min. Brace Assembly E - Pages	Min. Brace Anchorage [6] Form Pour [4] Deck Page D1	Min. Brace Anchorage [6] Metal [5] Deck Page D2	Max. [2] Brace Spacing (ft.)	Brace [3] Reaction P (lbs)	Min. Brace Assembly E - Pages	Min. Brace Anchorage [6] Form Pour [4] Deck Page D1	Min. Brace Anchorage [6] Metal [5] Deck Page D2
				2-Way Transverse Brace Pattern (B24.0, B43.0, B46.0)					6-Way Transverse, Longitudinal Brace Pattern (B24.1, B43.1, B46.1)				
11.0	10	97	1/2	40	660	C12AA04WS	N7	L7	80	858	C12AA06WS	N9	L9
25.0	10	219	3/4	30	1,125	C34DG06WS	N12	L12	60	1,463	C34DG06WS	N15	L15
35.0	10	307	3/4	21	1,103	C34DG06WS	N12	L12	42	1,433	C34DG06WS	N15	L15
50.0	10	439	3/4	15	1,125	C34DG06WS	N12	L12	30	1,463	C34DG06WS	N15	L15
65.0	10	570	3/4	11	1,073	C34DG06WS	N11	L11	22	1,394	C34DG06WS	N14	L14
75.0	10	658	3/4	10	1,125	C34DG06WS	N12	L12	20	1,463	C34DG06WS	N15	L15

1. TVL = DL + Fv + ($0.2S_{DS}$ x 0.70 x Wp). All Terms Are Working Loads. Based On Eccentric Loading, 65% Of Total Load Allocated Per Rod.
2. Reductions In Actual Installed Brace Spacing Will Result In An Equal Percentage Reduction In Brace Reaction. As An Option When This Occurs ISAT May Substitute An Alternate Anchorage From Tables D1 or D2 Which Meets or Exceeds The Lowered Brace Reaction.
3. At Max. 60 Degree Brace Inclination.
4. Min. 3,000 psi NWC. Any "N Series" Connection May Be Utilized Having A Numeric Designation Equal To Or Higher Than That Shown.
5. Min. 3,000 psi NWC or LWC. Any "L Series" Connection May Be Utilized Having A Numeric Designation Equal To Or Higher Than That Shown.
6. As An Alternate, Brace Anchorage Connections To Structure May Be Employed Using Any Detail From Structural Connections Section "D" Series Details Where Assembly Design Value Meets Or Exceeds Brace Reaction.
7. For Trade Specific Bracing Installation Notes, Refer To Page 7.1.
8. Utilize Any "G" Series Vertical Support Connection Having A Design Value Equal To Or Greater Than The Corresponding "Rod Total Vertical Load".

REVIEWED FOR CODE COMPLIANCE
OPM-0403
BY: William Staehlin
DATE: 01-26-2024
CALIFORNIA BUILDING CODE, 2022

REGISTERED PROFESSIONAL ENGINEER
MARCIN WASAZNIK
S 6612
STRUCTURAL
STATE OF CALIFORNIA

ISAT
A Division of Tomarco Contractor Specialties
International Seismic Application Technology
14848 Northam Street, La Mirada, CA 90638
877-999-4728 (Toll Free) 714-523-0845 (Fax)
www.isatsb.com

Rev. 1
03/12/19
Page
C34-0.75-60

CABLE BRACING REQUIREMENTS [7]:

TRAPEZE MOUNTED ELECTRICAL SYSTEMS (Conduit, Cable Tray, Bus Duct, Bus Way) — **MAXIMUM SEISMIC DESIGN FORCE = 1.00 G's**

Requires Use of ISAT Seismic Brackets. Use of Any Non-ISAT Bracket Voids Engineering. — *2013 California Building Code Compliant*

Maximum Trapeze Load (lbs/lf)	Max. Vertical Support Spacing (ft.)	Rod [1, 8] Total Vertical Load (lbs)	Min. [8] Vertical Support Rod Dia. (in.)	TRANSVERSE BRACING REQUIREMENTS					LONGITUDINAL BRACING REQUIREMENTS				
				Max. [2] Brace Spacing (ft.)	Brace [3] Reaction P (lbs)	Min. Brace Assembly E - Pages	Min. Brace Anchorage [6] Form Pour [4] Deck Page D1	Min. Brace Anchorage [6] Metal [5] Deck Page D2	Max. [2] Brace Spacing (ft.)	Brace [3] Reaction P (lbs)	Min. Brace Assembly E - Pages	Min. Brace Anchorage [6] Form Pour [4] Deck Page D1	Min. Brace Anchorage [6] Metal [5] Deck Page D2
				2-Way Transverse Brace Pattern (B24.0, B43.0, B46.0)					6-Way Transverse, Longitudinal Brace Pattern (B24.1, B43.1, B46.1)				
11.0	10	97	1/2	40	508	C12AA04WS	N6	L6	80	660	C12AA04WS	N7	L7
25.0	10	219	1/2	38	1,097	C12AA06WS	N11	L11	76	1,426	C12AA06WS	N15	L15
35.0	10	307	1/2	26	1,051	C12AA06WS	N11	L11	52	1,366	C12AA06WS	N14	L14
50.0	10	439	1/2	18	1,039	C12AA06WS	N11	L11	36	1,351	C12AA06WS	N14	L14
65.0	10	570	1/2	14	1,051	C12AA06WS	N11	L11	28	1,366	C12AA06WS	N14	L14
75.0	10	658	1/2	12	1,039	C12AA06WS	N11	L11	24	1,351	C12AA06WS	N14	L14

1. TVL = DL + Fv + ($0.2S_{DS}$ x 0.70 x Wp). All Terms Are Working Loads. Based On Eccentric Loading, 65% Of Total Load Allocated Per Rod.
2. Reductions In Actual Installed Brace Spacing Will Result In An Equal Percentage Reduction In Brace Reaction. As An Option When This Occurs ISAT May Substitute An Alternate Anchorage From Tables D1 or D2 Which Meets or Exceeds The Lowered Brace Reaction.
3. At Max. 30 Degree Brace Inclination.
4. Min. 3,000 psi NWC. Any "N Series" Connection May Be Utilized Having A Numeric Designation Equal To Or Higher Than That Shown.
5. Min. 3,000 psi NWC or LWC. Any "L Series" Connection May Be Utilized Having A Numeric Designation Equal To Or Higher Than That Shown.
6. As An Alternate, Brace Anchorage Connections To Structure May Be Employed Using Any Detail From Structural Connections Section "D" Series Details Where Assembly Design Value Meets Or Exceeds Brace Reaction.
7. For Trade Specific Bracing Installation Notes, Refer To Page 7.1.
8. Utilize Any "G" Series Vertical Support Connection Having A Design Value Equal To Or Greater Than The Corresponding "Rod Total Vertical Load".

REVIEWED FOR CODE COMPLIANCE
OPM-0403
By: William Staehlin
DATE: 01-26-2024
CALIFORNIA BUILDING CODE, 2022

REGISTERED PROFESSIONAL ENGINEER
MARCIN WASAZNIK
S 6612
STRUCTURAL
STATE OF CALIFORNIA

ISAT
A Division of Tomarco Contractor Specialties

International Seismic Application Technology
14848 Northam Street, La Mirada, CA 90638
877-999-4728 (Toll Free) 714-523-0845 (Fax)
www.isatsb.com

Rev. 0
08/03/18
Page
C34-1-30

CABLE BRACING REQUIREMENTS [7]:

TRAPEZE MOUNTED ELECTRICAL SYSTEMS (Conduit, Cable Tray, Bus Duct, Bus Way) — **MAXIMUM SEISMIC DESIGN FORCE = 1.00 G's**

Requires Use of ISAT Seismic Brackets. Use of Any Non-ISAT Bracket Voids Engineering. — *2013 California Building Code Compliant*

Maximum Trapeze Load (lbs/lf)	Max. Vertical Support Spacing (ft.)	Rod [1, 8] Total Vertical Load (lbs)	Min. [8] Vertical Support Rod Dia. (in.)	TRANSVERSE BRACING REQUIREMENTS					LONGITUDINAL BRACING REQUIREMENTS				
				Max. [2] Brace Spacing (ft.)	Brace [3] Reaction P (lbs)	Min. Brace Assembly E - Pages	Min. Brace Anchorage [6] Form Pour [4] Deck Page D1	Min. Brace Anchorage [6] Metal [5] Deck Page D2	Max. [2] Brace Spacing (ft.)	Brace [3] Reaction P (lbs)	Min. Brace Assembly E - Pages	Min. Brace Anchorage [6] Form Pour [4] Deck Page D1	Min. Brace Anchorage [6] Metal [5] Deck Page D2
				2-Way Transverse Brace Pattern (B24.0, B43.0, B46.0)					6-Way Transverse, Longitudinal Brace Pattern (B24.1, B43.1, B46.1)				
11.0	10	97	1/2	40	685	C12AA06WS	N7	L7	80	890	C12AA06WS	N9	L9
25.0	10	219	3/4	30	1,167	C34DG06WS	N12	L12	60	1,517	C34DG06TS	N16	L16
35.0	10	307	3/4	22	1,198	C34DG06WS	N12	L12	44	1,557	C34DG06TS	N16	L16
50.0	10	439	5/8	14	1,089	C58AA06WS	N11	L11	28	1,416	C58AA06WS	N15	L15
65.0	10	570	5/8	10	1,011	C58AA06WS	N11	L11	20	1,315	C58AA06WS	N14	L14

1. TVL = DL + Fv + ($0.2S_{DS}$ x 0.70 x Wp). All Terms Are Working Loads. Based On Eccentric Loading, 65% Of Total Load Allocated Per Rod.
2. Reductions In Actual Installed Brace Spacing Will Result In An Equal Percentage Reduction In Brace Reaction. As An Option When This Occurs ISAT May Substitute An Alternate Anchorage From Tables D1 or D2 Which Meets or Exceeds The Lowered Brace Reaction.
3. At Max. 50 Degree Brace Inclination.
4. Min. 3,000 psi NWC. Any "N Series" Connection May Be Utilized Having A Numeric Designation Equal To Or Higher Than That Shown.
5. Min. 3,000 psi NWC or LWC. Any "L Series" Connection May Be Utilized Having A Numeric Designation Equal To Or Higher Than That Shown.
6. As An Alternate, Brace Anchorage Connections To Structure May Be Employed Using Any Detail From Structural Connections Section "D" Series Details Where Assembly Design Value Meets Or Exceeds Brace Reaction.
7. For Trade Specific Bracing Installation Notes, Refer To Page 7.1.
8. Utilize Any "G" Series Vertical Support Connection Having A Design Value Equal To Or Greater Than The Corresponding "Rod Total Vertical Load".

REVIEWED FOR CODE COMPLIANCE
OPM-0403
BY: William Staehlin
DATE: 01-26-2024
CALIFORNIA BUILDING CODE 2022

REGISTERED PROFESSIONAL ENGINEER
MARCIN WASAZNIK
S 6612
STRUCTURAL
STATE OF CALIFORNIA

International Seismic Application Technology
14848 Northam Street, La Mirada, CA 90638
877-999-4728 (Toll Free) 714-523-0845 (Fax)
www.isatsb.com
A Division of Tomarco Contractor Specialties

Rev. 1
03/12/19
Page
C34-1-45

CABLE BRACING REQUIREMENTS [7]:

TRAPEZE MOUNTED ELECTRICAL SYSTEMS (Conduit, Cable Tray, Bus Duct, Bus Way) — **MAXIMUM SEISMIC DESIGN FORCE = 1.00 G's**

Requires Use of ISAT Seismic Brackets. Use of Any Non-ISAT Bracket Voids Engineering. — *2013 California Building Code Compliant*

Maximum Trapeze Load (lbs/lf)	Max. Vertical Support Spacing (ft.)	Rod [1, 8] Total Vertical Load (lbs)	Min. [8] Vertical Support Rod Dia. (in.)	TRANSVERSE BRACING REQUIREMENTS					LONGITUDINAL BRACING REQUIREMENTS				
				Max. [2] Brace Spacing (ft.)	Brace [3] Reaction P (lbs)	Min. Brace Assembly E - Pages	Min. Brace Anchorage [6] Form Pour [4] Deck Page D1	Min. Brace Anchorage [6] Metal [5] Deck Page D2	Max. [2] Brace Spacing (ft.)	Brace [3] Reaction P (lbs)	Min. Brace Assembly E - Pages	Min. Brace Anchorage [6] Form Pour [4] Deck Page D1	Min. Brace Anchorage [6] Metal [5] Deck Page D2
				2-Way Transverse Brace Pattern (B24.0, B43.0, B46.0)					6-Way Transverse, Longitudinal Brace Pattern (B24.1, B43.1, B46.1)				
11.0	10	97	5/8	40	880	C58AA06WS	N9	L9	80	1,144	C58AA06WS	N12	L12
25.0	10	219	3/4	22	1,100	C34DG06WS	N11	L11	44	1,430	C34DG06WS	N15	L15
35.0	10	307	3/4	16	1,120	C34DG06WS	N12	L12	32	1,456	C34DG06WS	N15	L15
50.0	10	439	3/4	11	1,100	C34DG06WS	N11	L11	22	1,430	C34DG06WS	N15	L15

1. TVL = DL + Fv + ($0.2S_{DS}$ x 0.70 x Wp). All Terms Are Working Loads. Based On Eccentric Loading, 65% Of Total Load Allocated Per Rod.
2. Reductions In Actual Installed Brace Spacing Will Result In An Equal Percentage Reduction In Brace Reaction. As An Option When This Occurs ISAT May Substitute An Alternate Anchorage From Tables D1 or D2 Which Meets or Exceeds The Lowered Brace Reaction.
3. At Max. 60 Degree Brace Inclination.
4. Min. 3,000 psi NWC. Any "N Series" Connection May Be Utilized Having A Numeric Designation Equal To Or Higher Than That Shown.
5. Min. 3,000 psi NWC or LWC. Any "L Series" Connection May Be Utilized Having A Numeric Designation Equal To Or Higher Than That Shown.
6. As An Alternate, Brace Anchorage Connections To Structure May Be Employed Using Any Detail From Structural Connections Section "D" Series Details Where Assembly Design Value Meets Or Exceeds Brace Reaction.
7. For Trade Specific Bracing Installation Notes, Refer To Page 7.1.
8. Utilize Any "G" Series Vertical Support Connection Having A Design Value Equal To Or Greater Than The Corresponding "Rod Total Vertical Load".

REVIEWED FOR CODE COMPLIANCE
HCAI
OPM-0403
BY: William Staehlin
DATE: 01-26-2024
CALIFORNIA BUILDING CODE 2022

REGISTERED PROFESSIONAL ENGINEER
MARCIN WASAZNIK
S 6612
STRUCTURAL
STATE OF CALIFORNIA

ISAT
A Division of Tomarco Contractor Specialties
International Seismic Application Technology
14848 Northam Street, La Mirada, CA 90638
877-999-4728 (Toll Free) 714-523-0845 (Fax)
www.isatsb.com

Rev. 1
03/12/19
Page
C34-1-60

CABLE BRACING REQUIREMENTS [7]:

2-TIERED TRAPEZE MOUNTED ELECTRICAL SYSTEMS (Conduit, Cable Tray, Bus Duct, Bus Way) — **MAXIMUM SEISMIC DESIGN FORCE = 0.25 G's**

Requires Use of ISAT Seismic Brackets. Use of Any Non-ISAT Bracket Voids Engineering. — *2013 California Building Code Compliant*

Combined 2-Tier Maximum Trapeze Load (lbs/lf)	Max. Vertical Support Spacing (ft.)	Rod [1, 8] Total Vertical Load (lbs)	Min. [8] Vertical Support Rod Dia. (in.)	TRANSVERSE BRACING REQUIREMENTS					LONGITUDINAL BRACING REQUIREMENTS				
				Max. [2] Brace Spacing (ft.)	Brace [3] Reaction P (lbs)	Min. Brace Assembly E - Pages	Min. Brace Anchorage [6] Form Pour [4] Deck Page D1	Min. Brace Anchorage [6] Metal [5] Deck Page D2	Max. [2] Brace Spacing (ft.)	Brace [3] Reaction P (lbs)	Min. Brace Assembly E - Pages	Min. Brace Anchorage [6] Form Pour [4] Deck Page D1	Min. Brace Anchorage [6] Metal [5] Deck Page D2
				2-Way Transverse Brace Pattern (B25.0)					6-Way Transverse, Longitudinal Brace Pattern (B25.1)				
11.0	10	97	3/8	40	64	C38AA04WS	N1	L1	80	83	C38AA04WS	N1	L1
25.0	10	219	1/2	40	144	C12AA04WS	N2	L2	80	188	C12AA04WS	N2	L2
35.0	10	307	1/2	40	202	C12AA04WS	N3	L3	80	263	C12AA04WS	N3	L3
50.0	10	439	1/2	40	289	C12AA04WS	N3	L3	80	375	C12AA04WS	N4	L4
65.0	10	570	1/2	40	375	C12AA04WS	N4	L4	80	488	C12AA04WS	N5	L5
75.0	10	658	1/2	40	433	C12AA04WS	N5	L5	80	563	C12AA04WS	N6	L6
100.0	10	878	1/2	40	577	C12AA04WS	N6	L6	80	751	C12AA06WS	N8	L8
125.0	10	1,097	5/8	40	722	C58AA06WS	N8	L8	80	938	C58AA06WS	N10	L10
150.0	10	1,316	5/8	40	866	C58AA06WS	N9	L9	80	1,126	C58AA06WS	N12	L12
175.0	10	1,536	5/8	37	935	C58AA06WS	N10	L10	74	1,215	C58AA06WS	N13	L13
200.0	10	1,755	5/8	32	924	C58AA06WS	N10	L10	64	1,201	C58AA06WS	N13	L13
225.0	10	1,974	5/8	29	942	C58AA06WS	N10	L10	58	1,224	C58AA06WS	N13	L13

1. TVL = DL + Fv + ($0.2S_{DS}$ x 0.70 x Wp). All Terms Are Working Loads. Based On Eccentric Loading, 65% Of Total Load Allocated Per Rod.
2. Reductions In Actual Installed Brace Spacing Will Result In An Equal Percentage Reduction In Brace Reaction. As An Option When This Occurs ISAT May Substitute An Alternate Anchorage From Tables D1 or D2 Which Meets or Exceeds The Lowered Brace Reaction.
3. At Max. 30 Degree Brace Inclination.
4. Min. 3,000 psi NWC. Any "N Series" Connection May Be Utilized Having A Numeric Designation Equal To Or Higher Than That Shown.
5. Min. 3,000 psi NWC or LWC. Any "L Series" Connection May Be Utilized Having A Numeric Designation Equal To Or Higher Than That Shown.
6. As An Alternate, Brace Anchorage Connections To Structure May Be Employed Using Any Detail From Structural Connections Section "D" Series Details Where Assembly Design Value Meets Or Exceeds Brace Reaction.
7. For Trade Specific Bracing Installation Notes, Refer To Page 7.1.
8. Utilize Any "G" Series Vertical Support Connection Having A Design Value Equal To Or Greater Than The Corresponding "Rod Total Vertical Load".

REVIEWED FOR CODE COMPLIANCE
OPM-0403
BY: William Staehlin
DATE: 01-26-2024
CALIFORNIA BUILDING CODE, 2019

REGISTERED PROFESSIONAL ENGINEER
MARCIN WASAZNIK
S-6612
STRUCTURAL
STATE OF CALIFORNIA

ISAT
A Division of Tomarco Contractor Specialties
International Seismic Application Technology
14848 Northam Street, La Mirada, CA 90638
877-999-4728 (Toll Free) 714-523-0845 (Fax)
www.isatsb.com

Rev. 1
03/12/19
Page
C34-0.25-30
2-Tier

CABLE BRACING REQUIREMENTS [7]:

2-TIERED TRAPEZE MOUNTED ELECTRICAL SYSTEMS (Conduit, Cable Tray, Bus Duct, Bus Way) — **MAXIMUM SEISMIC DESIGN FORCE = 0.25 G's**

Requires Use of ISAT Seismic Brackets. Use of Any Non-ISAT Bracket Voids Engineering. — *2013 California Building Code Compliant*

Combined 2-Tier Maximum Trapeze Load (lbs/lf)	Max. Vertical Support Spacing (ft.)	Rod [1, 8] Total Vertical Load (lbs)	Min. [8] Vertical Support Rod Dia. (in.)	TRANSVERSE BRACING REQUIREMENTS					LONGITUDINAL BRACING REQUIREMENTS				
				Max. [2] Brace Spacing (ft.)	Brace [3] Reaction P (lbs)	Min. Brace Assembly E - Pages	Min. Brace Anchorage [6] Form Pour [4] Deck Page D1	Min. Brace Anchorage [6] Metal [5] Deck Page D2	Max. [2] Brace Spacing (ft.)	Brace [3] Reaction P (lbs)	Min. Brace Assembly E - Pages	Min. Brace Anchorage [6] Form Pour [4] Deck Page D1	Min. Brace Anchorage [6] Metal [5] Deck Page D2
				2-Way Transverse Brace Pattern (B25.0)					6-Way Transverse, Longitudinal Brace Pattern (B25.1)				
11.0	10	97	3/8	40	86	C38AA04WS	N1	L1	80	111	C38AA04WS	N2	L2
25.0	10	219	1/2	40	194	C12AA04WS	N2	L2	80	253	C12AA04WS	N3	L3
35.0	10	307	1/2	40	272	C12AA04WS	N3	L3	80	354	C12AA04WS	N4	L4
50.0	10	439	1/2	40	389	C12AA04WS	N4	L4	80	506	C12AA04WS	N6	L6
65.0	10	570	5/8	40	506	C58AA04WS	N6	L6	80	657	C58AA04WS	N7	L7
75.0	10	658	3/4	40	583	C34CF04WS	N6	L6	80	758	C34DG06WS	N8	L8
100.0	10	878	3/4	40	778	C34DG06WS	N8	L8	80	1,011	C34DG06WS	N11	L11
125.0	10	1,097	3/4	32	778	C34DG06WS	N8	L8	64	1,011	C34DG06WS	N11	L11
150.0	10	1,316	3/4	27	788	C34DG06WS	N8	L8	54	1,024	C34DG06WS	N11	L11
175.0	10	1,536	3/4	23	783	C34DG06WS	N8	L8	46	1,018	C34DG06WS	N11	L11
200.0	10	1,755	3/4	21	817	C34DG06WS	N9	L9	42	1,062	C34DG06WS	N11	L11
225.0	10	1,974	3/4	19	831	C34DG06WS	N9	L9	38	1,081	C34DG06WS	N11	L11

1. TVL = DL + Fv + ($0.2S_{DS}$ x 0.70 x Wp). All Terms Are Working Loads. Based On Eccentric Loading, 65% Of Total Load Allocated Per Rod.
2. Reductions In Actual Installed Brace Spacing Will Result In An Equal Percentage Reduction In Brace Reaction. As An Option When This Occurs ISAT May Substitute An Alternate Anchorage From Tables D1 or D2 Which Meets or Exceeds The Lowered Brace Reaction.
3. At Max. 50 Degree Brace Inclination.
4. Min. 3,000 psi NWC. Any "N Series" Connection May Be Utilized Having A Numeric Designation Equal To Or Higher Than That Shown.
5. Min. 3,000 psi NWC or LWC. Any "L Series" Connection May Be Utilized Having A Numeric Designation Equal To Or Higher Than That Shown.
6. As An Alternate, Brace Anchorage Connections To Structure May Be Employed Using Any Detail From Structural Connections Section "D" Series Details Where Assembly Design Value Meets Or Exceeds Brace Reaction.
7. For Trade Specific Bracing Installation Notes, Refer To Page 7.1.
8. Utilize Any "G" Series Vertical Support Connection Having A Design Value Equal To Or Greater Than The Corresponding "Rod Total Vertical Load".

REVIEWED FOR CODE COMPLIANCE
OPM-0403
By: William Staehlin
DATE: 01-26-2024
CALIFORNIA BUILDING CODE, 2022

REGISTERED PROFESSIONAL ENGINEER
MARCIN WASAZNIK
S 6612
STRUCTURAL
STATE OF CALIFORNIA

ISAT
A Division of Tomarco Contractor Specialties
International Seismic Application Technology
14848 Northam Street, La Mirada, CA 90638
877-999-4728 (Toll Free) 714-523-0845 (Fax)
www.isatsb.com

Rev. 1
03/12/19
Page
C34-0.25-45
2-Tier

CABLE BRACING REQUIREMENTS [7]:

2-TIERED TRAPEZE MOUNTED ELECTRICAL SYSTEMS (Conduit, Cable Tray, Bus Duct, Bus Way) — **MAXIMUM SEISMIC DESIGN FORCE = 0.25 G's**

Requires Use of ISAT Seismic Brackets. Use of Any Non-ISAT Bracket Voids Engineering. — *2013 California Building Code Compliant*

Combined 2-Tier Maximum Trapeze Load (lbs/lf)	Max. Vertical Support Spacing (ft.)	Rod [1, 8] Total Vertical Load (lbs)	Min. [8] Vertical Support Rod Dia. (in.)	TRANSVERSE BRACING REQUIREMENTS					LONGITUDINAL BRACING REQUIREMENTS				
				Max. [2] Brace Spacing (ft.)	Brace [3] Reaction P (lbs)	Min. Brace Assembly Page E3	Min. Brace Anchorage [6] Form Pour [4] Deck Page D1	Min. Brace Anchorage [6] Metal [5] Deck Page D2	Max. [2] Brace Spacing (ft.)	Brace [3] Reaction P (lbs)	Min. Brace Assembly Page E3	Min. Brace Anchorage [6] Form Pour [4] Deck Page D1	Min. Brace Anchorage [6] Metal [5] Deck Page D2
				2-Way Transverse Brace Pattern (B25.0)					6-Way Transverse, Longitudinal Brace Pattern (B25.1)				
11.0	10	97	3/8	40	110	C38AA04WS	N2	L2	80	143	C38AA04WS	N2	L2
25.0	10	219	1/2	40	250	C12AA04WS	N3	L3	80	325	C12AA04WS	N4	L4
35.0	10	307	1/2	40	350	C12AA04WS	N4	L4	80	455	C12AA04WS	N5	L5
50.0	10	439	5/8	40	500	C58AA04WS	N5	L5	80	650	C58AA04WS	N7	L7
65.0	10	570	3/4	40	650	C34CF04WS	N7	L7	80	845	C34DG06WS	N9	L9
75.0	10	658	3/4	36	675	C34DG06WS	N7	L7	72	878	C34DG06WS	N9	L9
100.0	10	878	3/4	26	650	C34CF04WS	N7	L7	52	845	C34DG06WS	N9	L9
125.0	10	1,097	3/4	22	688	C34DG06WS	N7	L7	44	894	C34DG06WS	N9	L9
150.0	10	1,316	3/4	18	675	C34DG06WS	N7	L7	36	878	C34DG06WS	N9	L9
175.0	10	1,536	3/4	16	700	C34DG06WS	N7	L7	32	910	C34DG06WS	N10	L10
200.0	10	1,755	3/4	14	700	C34DG06WS	N7	L7	28	910	C34DG06WS	N10	L10
225.0	10	1,974	3/4	12	675	C34DG06WS	N7	L7	24	878	C34DG06WS	N9	L9

1. TVL = DL + Fv + ($0.2S_{DS}$ x 0.70 x Wp). All Terms Are Working Loads. Based On Eccentric Loading, 65% Of Total Load Allocated Per Rod.
2. Reductions In Actual Installed Brace Spacing Will Result In An Equal Percentage Reduction In Brace Reaction. As An Option When This Occurs ISAT May Substitute An Alternate Anchorage From Tables D1 or D2 Which Meets or Exceeds The Lowered Brace Reaction.
3. At Max. 60 Degree Brace Inclination.
4. Min. 3,000 psi NWC. Any "N Series" Connection May Be Utilized Having A Numeric Designation Equal To Or Higher Than That Shown.
5. Min. 3,000 psi NWC or LWC. Any "L Series" Connection May Be Utilized Having A Numeric Designation Equal To Or Higher Than That Shown.
6. As An Alternate, Brace Anchorage Connections To Structure May Be Employed Using Any Detail From Structural Connections Section "D" Series Details Where Assembly Design Value Meets Or Exceeds Brace Reaction.
7. For Trade Specific Bracing Installation Notes, Refer To Page 7.1.
8. Utilize Any "G" Series Vertical Support Connection Having A Design Value Equal To Or Greater Than The Corresponding "Rod Total Vertical Load".

REVIEWED FOR CODE COMPLIANCE
OPM-0403
BY: William Staehlin
DATE: 01-26-2024
CALIFORNIA BUILDING CODE, 2019

REGISTERED PROFESSIONAL ENGINEER
MARCIN WASAZNIK
S-6612
STRUCTURAL
STATE OF CALIFORNIA

ISAT
A Division of Tomarco Contractor Specialties
International Seismic Application Technology
14848 Northam Street, La Mirada, CA 90638
877-999-4728 (Toll Free) 714-523-0845 (Fax)
www.isatsb.com

Rev. 1
03/12/19
Page
C34-0.25-60
2-Tier

CABLE BRACING REQUIREMENTS [7]:

2-TIERED TRAPEZE MOUNTED ELECTRICAL SYSTEMS (Conduit, Cable Tray, Bus Duct, Bus Way) — **MAXIMUM SEISMIC DESIGN FORCE = 0.50 G's**

Requires Use of ISAT Seismic Brackets. Use of Any Non-ISAT Bracket Voids Engineering. — *2013 California Building Code Compliant*

Combined 2-Tier Maximum Trapeze Load (lbs/lf)	Max. Vertical Support Spacing (ft.)	Rod [1, 8] Total Vertical Load (lbs)	Min. [8] Vertical Support Rod Dia. (in.)	TRANSVERSE BRACING REQUIREMENTS					LONGITUDINAL BRACING REQUIREMENTS				
				Max. [2] Brace Spacing (ft.)	Brace [3] Reaction P (lbs)	Min. Brace Assembly E - Pages	Min. Brace Anchorage [6] Form Pour [4] Deck Page D1	Min. Brace Anchorage [6] Metal [5] Deck Page D2	Max. [2] Brace Spacing (ft.)	Brace [3] Reaction P (lbs)	Min. Brace Assembly E - Pages	Min. Brace Anchorage [6] Form Pour [4] Deck Page D1	Min. Brace Anchorage [6] Metal [5] Deck Page D2
				2-Way Transverse Brace Pattern (B25.0)					6-Way Transverse, Longitudinal Brace Pattern (B25.1)				
11.0	10	97	3/8	40	127	C38AA04WS	N2	L2	80	165	C38AA04WS	N2	L2
25.0	10	219	1/2	40	289	C12AA04WS	N3	L3	80	375	C12AA04WS	N4	L4
35.0	10	307	1/2	40	404	C12AA04WS	N5	L5	80	525	C12AA04WS	N6	L6
50.0	10	439	1/2	40	577	C12AA04WS	N6	L6	80	751	C12AA06WS	N8	L8
65.0	10	570	5/8	40	751	C58AA06WS	N8	L8	80	976	C58AA06WS	N10	L10
75.0	10	658	5/8	40	866	C58AA06WS	N9	L9	80	1,126	C58AA06WS	N12	L12
100.0	10	878	5/8	31	895	C58AA06WS	N9	L9	62	1,163	C58AA06WS	N12	L12
125.0	10	1,097	5/8	25	902	C58AA06WS	N10	L10	50	1,173	C58AA06WS	N12	L12
150.0	10	1,316	5/8	21	909	C58AA06WS	N10	L10	42	1,182	C58AA06WS	N12	L12
175.0	10	1,536	5/8	18	909	C58AA06WS	N10	L10	36	1,182	C58AA06WS	N12	L12
200.0	10	1,755	5/8	16	924	C58AA06WS	N10	L10	32	1,201	C58AA06WS	N13	L13
225.0	10	1,974	5/8	14	909	C58AA06WS	N10	L10	28	1,182	C58AA06WS	N12	L12

1. TVL = DL + Fv + ($0.2S_{DS}$ x 0.70 x Wp). All Terms Are Working Loads. Based On Eccentric Loading, 65% Of Total Load Allocated Per Rod.
2. Reductions In Actual Installed Brace Spacing Will Result In An Equal Percentage Reduction In Brace Reaction. As An Option When This Occurs ISAT May Substitute An Alternate Anchorage From Tables D1 or D2 Which Meets or Exceeds The Lowered Brace Reaction.
3. At Max. 30 Degree Brace Inclination.
4. Min. 3,000 psi NWC. Any "N Series" Connection May Be Utilized Having A Numeric Designation Equal To Or Higher Than That Shown.
5. Min. 3,000 psi NWC or LWC. Any "L Series" Connection May Be Utilized Having A Numeric Designation Equal To Or Higher Than That Shown.
6. As An Alternate, Brace Anchorage Connections To Structure May Be Employed Using Any Detail From Structural Connections Section "D" Series Details Where Assembly Design Value Meets Or Exceeds Brace Reaction.
7. For Trade Specific Bracing Installation Notes, Refer To Page 7.1.
8. Utilize Any "G" Series Vertical Support Connection Having A Design Value Equal To Or Greater Than The Corresponding "Rod Total Vertical Load".

REVIEWED FOR CODE COMPLIANCE
OPM-0403
BY: William Staehlin
DATE: 01-26-2024
CALIFORNIA BUILDING CODE, 2019

REGISTERED PROFESSIONAL ENGINEER
MARCIN WASAZNIK
S-6612
STRUCTURAL
STATE OF CALIFORNIA

ISAT
A Division of Tomarco Contractor Specialties
International Seismic Application Technology
14848 Northam Street, La Mirada, CA 90638
877-999-4728 (Toll Free) 714-523-0845 (Fax)
www.isatsb.com

Rev. 1
03/12/19
Page
C34-0.5-30
2-Tier

CABLE BRACING REQUIREMENTS [7]:

2-TIERED TRAPEZE MOUNTED ELECTRICAL SYSTEMS (Conduit, Cable Tray, Bus Duct, Bus Way) — **MAXIMUM SEISMIC DESIGN FORCE = 0.50 G's**

Requires Use of ISAT Seismic Brackets. Use of Any Non-ISAT Bracket Voids Engineering. — *2013 California Building Code Compliant*

Combined 2-Tier Maximum Trapeze Load (lbs/lf)	Max. Vertical Support Spacing (ft.)	Rod [1, 8] Total Vertical Load (lbs)	Min. [8] Vertical Support Rod Dia. (in.)	TRANSVERSE BRACING REQUIREMENTS					LONGITUDINAL BRACING REQUIREMENTS				
				Max. [2] Brace Spacing (ft.)	Brace [3] Reaction P (lbs)	Min. Brace Assembly E - Pages	Min. Brace Anchorage [6] Form Pour [4] Deck Page D1	Min. Brace Anchorage [6] Metal [5] Deck Page D2	Max. [2] Brace Spacing (ft.)	Brace [3] Reaction P (lbs)	Min. Brace Assembly E - Pages	Min. Brace Anchorage [6] Form Pour [4] Deck Page D1	Min. Brace Anchorage [6] Metal [5] Deck Page D2
				2-Way Transverse Brace Pattern (B25.0)					6-Way Transverse, Longitudinal Brace Pattern (B25.1)				
11.0	10	97	1/2	40	171	C12AA04WS	N2	L2	80	222	C12AA04WS	N3	L3
25.0	10	219	1/2	40	389	C12AA04WS	N4	L4	80	506	C12AA04WS	N6	L6
35.0	10	307	5/8	40	545	C58AA04WS	N6	L6	80	708	C58AA06WS	N8	L8
50.0	10	439	3/4	39	758	C34DG06WS	N8	L8	78	986	C34DG06WS	N10	L10
65.0	10	570	3/4	30	758	C34DG06WS	N8	L8	60	986	C34DG06WS	N10	L10
75.0	10	658	3/4	26	758	C34DG06WS	N8	L8	52	986	C34DG06WS	N10	L10
100.0	10	878	3/4	20	778	C34DG06WS	N8	L8	40	1,011	C34DG06WS	N11	L11
125.0	10	1,097	3/4	16	778	C34DG06WS	N8	L8	32	1,011	C34DG06WS	N11	L11
150.0	10	1,316	3/4	13	758	C34DG06WS	N8	L8	26	986	C34DG06WS	N10	L10
175.0	10	1,536	3/4	11	749	C34DG06WS	N8	L8	22	973	C34DG06WS	N10	L10
200.0	10	1,755	3/4	10	778	C34DG06WS	N8	L8	20	1,011	C34DG06WS	N11	L11

1. TVL = DL + Fv + ($0.2S_{DS}$ x 0.70 x Wp). All Terms Are Working Loads. Based On Eccentric Loading, 65% Of Total Load Allocated Per Rod.
2. Reductions In Actual Installed Brace Spacing Will Result In An Equal Percentage Reduction In Brace Reaction. As An Option When This Occurs ISAT May Substitute An Alternate Anchorage From Tables D1 or D2 Which Meets or Exceeds The Lowered Brace Reaction.
3. At Max. 50 Degree Brace Inclination.
4. Min. 3,000 psi NWC. Any "N Series" Connection May Be Utilized Having A Numeric Designation Equal To Or Higher Than That Shown.
5. Min. 3,000 psi NWC or LWC. Any "L Series" Connection May Be Utilized Having A Numeric Designation Equal To Or Higher Than That Shown.
6. As An Alternate, Brace Anchorage Connections To Structure May Be Employed Using Any Detail From Structural Connections Section "D" Series Details Where Assembly Design Value Meets Or Exceeds Brace Reaction.
7. For Trade Specific Bracing Installation Notes, Refer To Page 7.1.
8. Utilize Any "G" Series Vertical Support Connection Having A Design Value Equal To Or Greater Than The Corresponding "Rod Total Vertical Load".

REVIEWED FOR CODE COMPLIANCE
OPM-0403
BY: William Staehlin
DATE: 01-26-2024
CALIFORNIA BUILDING CODE, 2019

REGISTERED PROFESSIONAL ENGINEER MARCIN WASAZNIK S-6612 STRUCTURAL STATE OF CALIFORNIA

ISAT
A Division of Tomarco Contractor Specialties

International Seismic Application Technology
14848 Northam Street, La Mirada, CA 90638
877-999-4728 (Toll Free) 714-523-0845 (Fax)
www.isatsb.com

Rev. 1
03/12/19
Page
C34-0.5-45
2-Tier

CABLE BRACING REQUIREMENTS [7]:

2-TIERED TRAPEZE MOUNTED ELECTRICAL SYSTEMS (Conduit, Cable Tray, Bus Duct, Bus Way) — **MAXIMUM SEISMIC DESIGN FORCE = 0.50 G's**

Requires Use of ISAT Seismic Brackets. Use of Any Non-ISAT Bracket Voids Engineering. — *2013 California Building Code Compliant*

Combined 2-Tier Maximum Trapeze Load (lbs/lf)	Max. Vertical Support Spacing (ft.)	Rod [1, 8] Total Vertical Load (lbs)	Min. [8] Vertical Support Rod Dia. (in.)	TRANSVERSE BRACING REQUIREMENTS					LONGITUDINAL BRACING REQUIREMENTS				
				Max. [2] Brace Spacing (ft.)	Brace [3] Reaction P (lbs)	Min. Brace Assembly Page E3	Min. Brace Anchorage [6] Form Pour [4] Deck Page D1	Min. Brace Anchorage [6] Metal [5] Deck Page D2	Max. [2] Brace Spacing (ft.)	Brace [3] Reaction P (lbs)	Min. Brace Assembly Page E3	Min. Brace Anchorage [6] Form Pour [4] Deck Page D1	Min. Brace Anchorage [6] Metal [5] Deck Page D2
				2-Way Transverse Brace Pattern (B25.0)					6-Way Transverse, Longitudinal Brace Pattern (B25.1)				
11.0	10	97	1/2	40	220	C12AA04WS	N3	L3	80	286	C12AA04WS	N3	L3
25.0	10	219	3/4	40	500	C34CF04WS	N5	L5	80	650	C34CF04WS	N7	L7
35.0	10	307	3/4	38	665	C34CF04WS	N7	L7	76	865	C34DG06WS	N9	L9
50.0	10	439	3/4	26	650	C34CF04WS	N7	L7	52	845	C34DG06WS	N9	L9
65.0	10	570	3/4	20	650	C34CF04WS	N7	L7	40	845	C34DG06WS	N9	L9
75.0	10	658	3/4	18	675	C34DG06WS	N7	L7	36	878	C34DG06WS	N9	L9
100.0	10	878	3/4	12	600	C34CF04WS	N6	L6	24	780	C34DG06WS	N8	L8
125.0	10	1,097	3/4	10	625	C34CF04WS	N7	L7	20	813	C34DG06WS	N9	L9

1. TVL = DL + Fv + ($0.2S_{DS}$ x 0.70 x Wp). All Terms Are Working Loads. Based On Eccentric Loading, 65% Of Total Load Allocated Per Rod.
2. Reductions In Actual Installed Brace Spacing Will Result In An Equal Percentage Reduction In Brace Reaction. As An Option When This Occurs ISAT May Substitute An Alternate Anchorage From Tables D1 or D2 Which Meets or Exceeds The Lowered Brace Reaction.
3. At Max. 60 Degree Brace Inclination.
4. Min. 3,000 psi NWC. Any "N Series" Connection May Be Utilized Having A Numeric Designation Equal To Or Higher Than That Shown.
5. Min. 3,000 psi NWC or LWC. Any "L Series" Connection May Be Utilized Having A Numeric Designation Equal To Or Higher Than That Shown.
6. As An Alternate, Brace Anchorage Connections To Structure May Be Employed Using Any Detail From Structural Connections Section "D" Series Details Where Assembly Design Value Meets Or Exceeds Brace Reaction.
7. For Trade Specific Bracing Installation Notes, Refer To Page 7.1.
8. Utilize Any "G" Series Vertical Support Connection Having A Design Value Equal To Or Greater Than The Corresponding "Rod Total Vertical Load".

REVIEWED FOR CODE COMPLIANCE
OPM-0403
BY: William Staehlin
DATE: 01-26-2024
CALIFORNIA BUILDING CODE, 2022

REGISTERED PROFESSIONAL ENGINEER MARCIN WASAZNIK S-6612 STRUCTURAL STATE OF CALIFORNIA

ISAT
A Division of Tomarco Contractor Specialties
International Seismic Application Technology
14848 Northam Street, La Mirada, CA 90638
877-999-4728 (Toll Free) 714-523-0845 (Fax)
www.isatsb.com

Rev. 1
03/12/19
Page
C34-0.5-60
2-Tier

CABLE BRACING REQUIREMENTS [7]:

2-TIERED TRAPEZE MOUNTED ELECTRICAL SYSTEMS (Conduit, Cable Tray, Bus Duct, Bus Way) — **MAXIMUM SEISMIC DESIGN FORCE = 0.75 G's**

Requires Use of ISAT Seismic Brackets. Use of Any Non-ISAT Bracket Voids Engineering. — *2013 California Building Code Compliant*

Combined 2-Tier Maximum Trapeze Load (lbs/lf)	Max. Vertical Support Spacing (ft.)	Rod [1, 8] Total Vertical Load (lbs)	Min. [8] Vertical Support Rod Dia. (in.)	TRANSVERSE BRACING REQUIREMENTS					LONGITUDINAL BRACING REQUIREMENTS				
				Max. [2] Brace Spacing (ft.)	Brace [3] Reaction P (lbs)	Min. Brace Assembly E - Pages	Min. Brace Anchorage [6] Form Pour [4] Deck Page D1	Min. Brace Anchorage [6] Metal [5] Deck Page D2	Max. [2] Brace Spacing (ft.)	Brace [3] Reaction P (lbs)	Min. Brace Assembly E - Pages	Min. Brace Anchorage [6] Form Pour [4] Deck Page D1	Min. Brace Anchorage [6] Metal [5] Deck Page D2
				2-Way Transverse Brace Pattern (B25.0)					6-Way Transverse, Longitudinal Brace Pattern (B25.1)				
11.0	10	97	3/8	40	191	C38AA04WS	N2	L2	80	248	C38AA04WS	N3	L3
25.0	10	219	1/2	40	433	C12AA04WS	N5	L5	80	563	C12AA04WS	N6	L6
35.0	10	307	1/2	40	606	C12AA04WS	N7	L7	80	788	C12AA06WS	N8	L8
50.0	10	439	5/8	40	866	C58AA06WS	N9	L9	80	1,126	C58AA06WS	N12	L12
65.0	10	570	3/4	32	901	C34DG06WS	N10	L10	64	1,171	C34DG06WS	N12	L12
75.0	10	658	3/4	28	909	C34DG06WS	N10	L10	56	1,182	C34DG06WS	N12	L12
100.0	10	878	3/4	21	909	C34DG06WS	N10	L10	42	1,182	C34DG06WS	N12	L12
125.0	10	1,097	3/4	17	920	C34DG06WS	N10	L10	34	1,196	C34DG06WS	N12	L12
150.0	10	1,316	5/8	14	909	C58AA06WS	N10	L10	28	1,182	C58AA06WS	N12	L12
175.0	10	1,536	5/8	12	909	C58AA06WS	N10	L10	24	1,182	C58AA06WS	N12	L12
200.0	10	1,755	5/8	10	866	C58AA06WS	N9	L9	20	1,126	C58AA06WS	N12	L12

1. TVL = DL + Fv + ($0.2S_{DS}$ x 0.70 x Wp). All Terms Are Working Loads. Based On Eccentric Loading, 65% Of Total Load Allocated Per Rod.
2. Reductions In Actual Installed Brace Spacing Will Result In An Equal Percentage Reduction In Brace Reaction. As An Option When This Occurs ISAT May Substitute An Alternate Anchorage From Tables D1 or D2 Which Meets or Exceeds The Lowered Brace Reaction.
3. At Max. 30 Degree Brace Inclination.
4. Min. 3,000 psi NWC. Any "N Series" Connection May Be Utilized Having A Numeric Designation Equal To Or Higher Than That Shown.
5. Min. 3,000 psi NWC or LWC. Any "L Series" Connection May Be Utilized Having A Numeric Designation Equal To Or Higher Than That Shown.
6. As An Alternate, Brace Anchorage Connections To Structure May Be Employed Using Any Detail From Structural Connections Section "D" Series Details Where Assembly Design Value Meets Or Exceeds Brace Reaction.
7. For Trade Specific Bracing Installation Notes, Refer To Page 7.1.
8. Utilize Any "G" Series Vertical Support Connection Having A Design Value Equal To Or Greater Than The Corresponding "Rod Total Vertical Load".

REVIEWED FOR CODE COMPLIANCE
OPM-0403
BY: William Staehlin
DATE: 01-26-2024
CALIFORNIA BUILDING CODE, 2019

REGISTERED PROFESSIONAL ENGINEER
MARCIN WASAZNIK
S 6612
STRUCTURAL
STATE OF CALIFORNIA

ISAT
A Division of Tomarco Contractor Specialties
International Seismic Application Technology
14848 Northam Street, La Mirada, CA 90638
877-999-4728 (Toll Free) 714-523-0845 (Fax)
www.isatsb.com

Rev. 1
03/12/19
Page
C34-0.75-30
2-Tier

CABLE BRACING REQUIREMENTS [7]:

2-TIERED TRAPEZE MOUNTED ELECTRICAL SYSTEMS (Conduit, Cable Tray, Bus Duct, Bus Way) — **MAXIMUM SEISMIC DESIGN FORCE = 0.75 G's**

Requires Use of ISAT Seismic Brackets. Use of Any Non-ISAT Bracket Voids Engineering. — *2013 California Building Code Compliant*

Combined 2-Tier Maximum Trapeze Load (lbs/lf)	Max. Vertical Support Spacing (ft.)	Rod [1, 8] Total Vertical Load (lbs)	Min. [8] Vertical Support Rod Dia. (in.)	TRANSVERSE BRACING REQUIREMENTS					LONGITUDINAL BRACING REQUIREMENTS				
				Max. [2] Brace Spacing (ft.)	Brace [3] Reaction P (lbs)	Min. Brace Assembly E - Pages	Min. Brace Anchorage [6] Form Pour [4] Deck Page D1	Min. Brace Anchorage [6] Metal [5] Deck Page D2	Max. [2] Brace Spacing (ft.)	Brace [3] Reaction P (lbs)	Min. Brace Assembly E - Pages	Min. Brace Anchorage [6] Form Pour [4] Deck Page D1	Min. Brace Anchorage [6] Metal [5] Deck Page D2
				2-Way Transverse Brace Pattern (B25.0)					6-Way Transverse, Longitudinal Brace Pattern (B25.1)				
11.0	10	97	1/2	40	257	C12AA04WS	N3	L3	80	334	C12AA04WS	N4	L4
25.0	10	219	3/4	40	583	C34CF04WS	N6	L6	80	758	C34DG06WS	N8	L8
35.0	10	307	3/4	37	755	C34DG06WS	N8	L8	74	982	C34DG06WS	N10	L10
50.0	10	439	3/4	26	758	C34DG06WS	N8	L8	52	986	C34DG06WS	N10	L10
65.0	10	570	3/4	20	758	C34DG06WS	N8	L8	40	986	C34DG06WS	N10	L10
75.0	10	658	3/4	17	744	C34DG06WS	N8	L8	34	967	C34DG06WS	N10	L10
100.0	10	878	3/4	13	758	C34DG06WS	N8	L8	26	986	C34DG06WS	N10	L10
125.0	10	1,097	3/4	10	729	C34DG06WS	N8	L8	20	948	C34DG06WS	N10	L10

1. TVL = DL + Fv + ($0.2S_{DS}$ x 0.70 x Wp). All Terms Are Working Loads. Based On Eccentric Loading, 65% Of Total Load Allocated Per Rod.
2. Reductions In Actual Installed Brace Spacing Will Result In An Equal Percentage Reduction In Brace Reaction. As An Option When This Occurs ISAT May Substitute An Alternate Anchorage From Tables D1 or D2 Which Meets or Exceeds The Lowered Brace Reaction.
3. At Max. 50 Degree Brace Inclination.
4. Min. 3,000 psi NWC. Any "N Series" Connection May Be Utilized Having A Numeric Designation Equal To Or Higher Than That Shown.
5. Min. 3,000 psi NWC or LWC. Any "L Series" Connection May Be Utilized Having A Numeric Designation Equal To Or Higher Than That Shown.
6. As An Alternate, Brace Anchorage Connections To Structure May Be Employed Using Any Detail From Structural Connections Section "D" Series Details Where Assembly Design Value Meets Or Exceeds Brace Reaction.
7. For Trade Specific Bracing Installation Notes, Refer To Page 7.1.
8. Utilize Any "G" Series Vertical Support Connection Having A Design Value Equal To Or Greater Than The Corresponding "Rod Total Vertical Load".

REVIEWED FOR CODE COMPLIANCE
OPM-0403
BY: William Staehlin
DATE: 01-26-2024
CALIFORNIA BUILDING CODE, 2022

REGISTERED PROFESSIONAL ENGINEER
MARCIN WASAZNIK
S 6612
STRUCTURAL
STATE OF CALIFORNIA

ISAT
A Division of Tomarco Contractor Specialties
International Seismic Application Technology
14848 Northam Street, La Mirada, CA 90638
877-999-4728 (Toll Free) 714-523-0845 (Fax)
www.isatsb.com

Rev. 1
03/12/19
Page
C34-0.75-45
2-Tier

CABLE BRACING REQUIREMENTS [7]:

2-TIERED TRAPEZE MOUNTED ELECTRICAL SYSTEMS (Conduit, Cable Tray, Bus Duct, Bus Way) — **MAXIMUM SEISMIC DESIGN FORCE = 0.75 G's**

Requires Use of ISAT Seismic Brackets. Use of Any Non-ISAT Bracket Voids Engineering. — *2013 California Building Code Compliant*

Combined 2-Tier Maximum Trapeze Load (lbs/lf)	Max. Vertical Support Spacing (ft.)	Rod [1, 8] Total Vertical Load (lbs)	Min. [8] Vertical Support Rod Dia. (in.)	TRANSVERSE BRACING REQUIREMENTS					LONGITUDINAL BRACING REQUIREMENTS				
				Max. [2] Brace Spacing (ft.)	Brace [3] Reaction P (lbs)	Min. Brace Assembly Page E3	Min. Brace Anchorage [6] Form Pour [4] Deck Page D1	Min. Brace Anchorage [6] Metal [5] Deck Page D2	Max. [2] Brace Spacing (ft.)	Brace [3] Reaction P (lbs)	Min. Brace Assembly Page E3	Min. Brace Anchorage [6] Form Pour [4] Deck Page D1	Min. Brace Anchorage [6] Metal [5] Deck Page D2
				2-Way Transverse Brace Pattern (B25.0)					6-Way Transverse, Longitudinal Brace Pattern (B25.1)				
11.0	10	97	1/2	40	330	C12AA04WS	N4	L4	80	429	C12AA04WS	N5	L5
25.0	10	219	3/4	34	638	C34CF04WS	N7	L7	68	829	C34DG06WS	N9	L9
35.0	10	307	3/4	24	630	C34CF04WS	N7	L7	48	819	C34DG06WS	N9	L9
50.0	10	439	3/4	18	675	C34DG06WS	N7	L7	36	878	C34DG06WS	N9	L9
65.0	10	570	3/4	14	683	C34DG06WS	N7	L7	28	887	C34DG06WS	N9	L9
75.0	10	658	3/4	12	675	C34DG06WS	N7	L7	24	878	C34DG06WS	N9	L9

1. TVL = DL + Fv + ($0.2S_{DS}$ x 0.70 x Wp). All Terms Are Working Loads. Based On Eccentric Loading, 65% Of Total Load Allocated Per Rod.
2. Reductions In Actual Installed Brace Spacing Will Result In An Equal Percentage Reduction In Brace Reaction. As An Option When This Occurs ISAT May Substitute An Alternate Anchorage From Tables D1 or D2 Which Meets or Exceeds The Lowered Brace Reaction.
3. At Max. 60 Degree Brace Inclination.
4. Min. 3,000 psi NWC. Any "N Series" Connection May Be Utilized Having A Numeric Designation Equal To Or Higher Than That Shown.
5. Min. 3,000 psi NWC or LWC. Any "L Series" Connection May Be Utilized Having A Numeric Designation Equal To Or Higher Than That Shown.
6. As An Alternate, Brace Anchorage Connections To Structure May Be Employed Using Any Detail From Structural Connections Section "D" Series Details Where Assembly Design Value Meets Or Exceeds Brace Reaction.
7. For Trade Specific Bracing Installation Notes, Refer To Page 7.1.
8. Utilize Any "G" Series Vertical Support Connection Having A Design Value Equal To Or Greater Than The Corresponding "Rod Total Vertical Load".

REVIEWED FOR CODE COMPLIANCE
OPM-0403
BY: William Staehlin
DATE: 01-26-2024
CALIFORNIA BUILDING CODE, 2022

REGISTERED PROFESSIONAL ENGINEER
MARCIN WASAZNIK
S 6612
STRUCTURAL
STATE OF CALIFORNIA

ISAT
A Division of Tomarco Contractor Specialties
International Seismic Application Technology
14848 Northam Street, La Mirada, CA 90638
877-999-4728 (Toll Free) 714-523-0845 (Fax)
www.isatsb.com

Rev. 1
03/12/19
Page
C34-0.75-60
2-Tier

CABLE BRACING REQUIREMENTS [7]:

2-TIERED TRAPEZE MOUNTED ELECTRICAL SYSTEMS (Conduit, Cable Tray, Bus Duct, Bus Way) — **MAXIMUM SEISMIC DESIGN FORCE = 1.00 G's**

Requires Use of ISAT Seismic Brackets. Use of Any Non-ISAT Bracket Voids Engineering. — *2013 California Building Code Compliant*

Combined 2-Tier Maximum Trapeze Load (lbs/lf)	Max. Vertical Support Spacing (ft.)	Rod [1, 8] Total Vertical Load (lbs)	Min. [8] Vertical Support Rod Dia. (in.)	TRANSVERSE BRACING REQUIREMENTS					LONGITUDINAL BRACING REQUIREMENTS				
				Max. [2] Brace Spacing (ft.)	Brace [3] Reaction P (lbs)	Min. Brace Assembly E - Pages	Min. Brace Anchorage [6] Form Pour [4] Deck Page D1	Min. Brace Anchorage [6] Metal [5] Deck Page D2	Max. [2] Brace Spacing (ft.)	Brace [3] Reaction P (lbs)	Min. Brace Assembly E - Pages	Min. Brace Anchorage [6] Form Pour [4] Deck Page D1	Min. Brace Anchorage [6] Metal [5] Deck Page D2
				2-Way Transverse Brace Pattern (B25.0)					6-Way Transverse, Longitudinal Brace Pattern (B25.1)				
11.0	10	97	1/2	40	254	C12AA04WS	N3	L3	80	330	C12AA04WS	N4	L4
25.0	10	219	1/2	40	577	C12AA04WS	N6	L6	80	751	C12AA06WS	N8	L8
35.0	10	307	5/8	40	808	C58AA06WS	N9	L9	80	1,051	C58AA06WS	N11	L11
50.0	10	439	3/4	31	895	C34DG06WS	N9	L9	62	1,163	C34DG06WS	N12	L12
65.0	10	570	3/4	24	901	C34DG06WS	N10	L10	48	1,171	C34DG06WS	N12	L12
75.0	10	658	3/4	21	909	C34DG06WS	N10	L10	42	1,182	C34DG06WS	N12	L12
100.0	10	878	5/8	15	866	C58AA06WS	N9	L9	30	1,126	C58AA06WS	N12	L12
125.0	10	1,097	5/8	12	866	C58AA06WS	N9	L9	24	1,126	C58AA06WS	N12	L12
150.0	10	1,316	5/8	10	866	C58AA06WS	N9	L9	20	1,126	C58AA06WS	N12	L12

1. TVL = DL + Fv + ($0.2S_{DS}$ x 0.70 x Wp). All Terms Are Working Loads. Based On Eccentric Loading, 65% Of Total Load Allocated Per Rod.
2. Reductions In Actual Installed Brace Spacing Will Result In An Equal Percentage Reduction In Brace Reaction. As An Option When This Occurs ISAT May Substitute An Alternate Anchorage From Tables D1 or D2 Which Meets or Exceeds The Lowered Brace Reaction.
3. At Max. 30 Degree Brace Inclination.
4. Min. 3,000 psi NWC. Any "N Series" Connection May Be Utilized Having A Numeric Designation Equal To Or Higher Than That Shown.
5. Min. 3,000 psi NWC or LWC. Any "L Series" Connection May Be Utilized Having A Numeric Designation Equal To Or Higher Than That Shown.
6. As An Alternate, Brace Anchorage Connections To Structure May Be Employed Using Any Detail From Structural Connections Section "D" Series Details Where Assembly Design Value Meets Or Exceeds Brace Reaction.
7. For Trade Specific Bracing Installation Notes, Refer To Page 7.1.
8. Utilize Any "G" Series Vertical Support Connection Having A Design Value Equal To Or Greater Than The Corresponding "Rod Total Vertical Load".

REVIEWED FOR CODE COMPLIANCE
OPM-0403
BY: William Staehlin
DATE: 01-26-2024
CALIFORNIA BUILDING CODE, 2022

REGISTERED PROFESSIONAL ENGINEER
MARCIN WASAZNIK
S 6612
STRUCTURAL
STATE OF CALIFORNIA

ISAT
A Division of Tomarco Contractor Specialties
International Seismic Application Technology
14848 Northam Street, La Mirada, CA 90638
877-999-4728 (Toll Free) 714-523-0845 (Fax)
www.isatsb.com

Rev. 1
03/12/19
Page
C34-1-30
2-Tier

CABLE BRACING REQUIREMENTS [7]:

2-TIERED TRAPEZE MOUNTED ELECTRICAL SYSTEMS (Conduit, Cable Tray, Bus Duct, Bus Way) — **MAXIMUM SEISMIC DESIGN FORCE = 1.00 G's**

Requires Use of ISAT Seismic Brackets. Use of Any Non-ISAT Bracket Voids Engineering. — *2013 California Building Code Compliant*

Combined 2-Tier Maximum Trapeze Load (lbs/lf)	Max. Vertical Support Spacing (ft.)	Rod [1, 8] Total Vertical Load (lbs)	Min. [8] Vertical Support Rod Dia. (in.)	TRANSVERSE BRACING REQUIREMENTS					LONGITUDINAL BRACING REQUIREMENTS				
				Max. [2] Brace Spacing (ft.)	Brace [3] Reaction P (lbs)	Min. Brace Assembly E - Pages	Min. Brace Anchorage [6] Form Pour [4] Deck Page D1	Min. Brace Anchorage [6] Metal [5] Deck Page D2	Max. [2] Brace Spacing (ft.)	Brace [3] Reaction P (lbs)	Min. Brace Assembly E - Pages	Min. Brace Anchorage [6] Form Pour [4] Deck Page D1	Min. Brace Anchorage [6] Metal [5] Deck Page D2
				2-Way Transverse Brace Pattern (B25.0)					6-Way Transverse, Longitudinal Brace Pattern (B25.1)				
11.0	10	97	1/2	40	342	C12AA04WS	N4	L4	80	445	C12AA04WS	N5	L5
25.0	10	219	3/4	39	758	C34DG06WS	N8	L8	78	986	C34DG06WS	N10	L10
35.0	10	307	3/4	28	762	C34DG06WS	N8	L8	56	991	C34DG06WS	N10	L10
50.0	10	439	3/4	19	739	C34DG06WS	N8	L8	38	961	C34DG06WS	N10	L10
65.0	10	570	3/4	15	758	C34DG06WS	N8	L8	30	986	C34DG06WS	N10	L10
75.0	10	658	3/4	13	758	C34DG06WS	N8	L8	26	986	C34DG06WS	N10	L10
100.0	10	878	3/4	10	778	C34DG06WS	N8	L8	20	1,011	C34DG06WS	N11	L11

1. TVL = DL + Fv + ($0.2S_{DS}$ x 0.70 x Wp). All Terms Are Working Loads. Based On Eccentric Loading, 65% Of Total Load Allocated Per Rod.
2. Reductions In Actual Installed Brace Spacing Will Result In An Equal Percentage Reduction In Brace Reaction. As An Option When This Occurs ISAT May Substitute An Alternate Anchorage From Tables D1 or D2 Which Meets or Exceeds The Lowered Brace Reaction.
3. At Max. 50 Degree Brace Inclination.
4. Min. 3,000 psi NWC. Any "N Series" Connection May Be Utilized Having A Numeric Designation Equal To Or Higher Than That Shown.
5. Min. 3,000 psi NWC or LWC. Any "L Series" Connection May Be Utilized Having A Numeric Designation Equal To Or Higher Than That Shown.
6. As An Alternate, Brace Anchorage Connections To Structure May Be Employed Using Any Detail From Structural Connections Section "D" Series Details Where Assembly Design Value Meets Or Exceeds Brace Reaction.
7. For Trade Specific Bracing Installation Notes, Refer To Page 7.1.
8. Utilize Any "G" Series Vertical Support Connection Having A Design Value Equal To Or Greater Than The Corresponding "Rod Total Vertical Load".

REVIEWED FOR CODE COMPLIANCE BY: William Staehlin DATE: 01-26-2024 OPM-0403 CALIFORNIA BUILDING CODE, 2022

REGISTERED PROFESSIONAL ENGINEER MARCIN WASAZNIK S 6612 STRUCTURAL STATE OF CALIFORNIA

ISAT
A Division of Tomarco Contractor Specialties
International Seismic Application Technology
14848 Northam Street, La Mirada, CA 90638
877-999-4728 (Toll Free) 714-523-0845 (Fax)
www.isatsb.com

Rev. 1
03/12/19
Page
C34-1-45
2-Tier

CABLE BRACING REQUIREMENTS [7]:

2-TIERED TRAPEZE MOUNTED ELECTRICAL SYSTEMS (Conduit, Cable Tray, Bus Duct, Bus Way) — **MAXIMUM SEISMIC DESIGN FORCE = 1.00 G's**

Requires Use of ISAT Seismic Brackets. Use of Any Non-ISAT Bracket Voids Engineering. — *2013 California Building Code Compliant*

Combined 2-Tier Maximum Trapeze Load (lbs/lf)	Max. Vertical Support Spacing (ft.)	Rod [1, 8] Total Vertical Load (lbs)	Min. [8] Vertical Support Rod Dia. (in.)	TRANSVERSE BRACING REQUIREMENTS					LONGITUDINAL BRACING REQUIREMENTS				
				Max. [2] Brace Spacing (ft.)	Brace [3] Reaction P (lbs)	Min. Brace Assembly Page E3	Min. Brace Anchorage [6] Form Pour [4] Deck Page D1	Min. Brace Anchorage [6] Metal [5] Deck Page D2	Max. [2] Brace Spacing (ft.)	Brace [3] Reaction P (lbs)	Min. Brace Assembly Page E3	Min. Brace Anchorage [6] Form Pour [4] Deck Page D1	Min. Brace Anchorage [6] Metal [5] Deck Page D2
				2-Way Transverse Brace Pattern (B25.0)					6-Way Transverse, Longitudinal Brace Pattern (B25.1)				
11.0	10	97	5/8	40	440	C58AA04WS	N5	L5	80	572	C58AA04WS	N6	L6
25.0	10	219	3/4	26	650	C34CF04WS	N7	L7	52	845	C34DG06WS	N9	L9
35.0	10	307	3/4	18	630	C34CF04WS	N7	L7	36	819	C34DG06WS	N9	L9
50.0	10	439	3/4	12	600	C34CF04WS	N6	L6	24	780	C34DG06WS	N8	L8
65.0	10	570	3/4	10	650	C34CF04WS	N7	L7	20	845	C34DG06WS	N9	L9

1. TVL = DL + Fv + ($0.2S_{DS}$ x 0.70 x Wp). All Terms Are Working Loads. Based On Eccentric Loading, 65% Of Total Load Allocated Per Rod.
2. Reductions In Actual Installed Brace Spacing Will Result In An Equal Percentage Reduction In Brace Reaction. As An Option When This Occurs ISAT May Substitute An Alternate Anchorage From Tables D1 or D2 Which Meets or Exceeds The Lowered Brace Reaction.
3. At Max. 60 Degree Brace Inclination.
4. Min. 3,000 psi NWC. Any "N Series" Connection May Be Utilized Having A Numeric Designation Equal To Or Higher Than That Shown.
5. Min. 3,000 psi NWC or LWC. Any "L Series" Connection May Be Utilized Having A Numeric Designation Equal To Or Higher Than That Shown.
6. As An Alternate, Brace Anchorage Connections To Structure May Be Employed Using Any Detail From Structural Connections Section "D" Series Details Where Assembly Design Value Meets Or Exceeds Brace Reaction.
7. For Trade Specific Bracing Installation Notes, Refer To Page 7.1.
8. Utilize Any "G" Series Vertical Support Connection Having A Design Value Equal To Or Greater Than The Corresponding "Rod Total Vertical Load".

REVIEWED FOR CODE COMPLIANCE
OPM-0403
BY: William Staehlin
DATE: 01-26-2024
CALIFORNIA BUILDING CODE 2022

REGISTERED PROFESSIONAL ENGINEER MARCIN WASAZNIK S 6612 STRUCTURAL STATE OF CALIFORNIA

ISAT
A Division of Tomarco Contractor Specialties
International Seismic Application Technology
14848 Northam Street, La Mirada, CA 90638
877-999-4728 (Toll Free) 714-523-0845 (Fax)
www.isatsb.com

Rev. 1
03/12/19
Page
C34-1-60
2-Tier

4-WAY SPLAYED RIGID BRACING REQUIREMENTS [7]:

TRAPEZE MOUNTED ELECTRICAL SYSTEMS (Conduit, Cable Tray, Bus Duct, Bus Way) ***MAXIMUM SEISMIC DESIGN FORCE = 0.25 G's***

Requires Use of ISAT Seismic Brackets. Use of Any Non-ISAT Bracket Voids Engineering. 2013 California Building Code Compliant

Maximum Trapeze Load (lbs/lf)	Max. Vertical Support Spacing (ft.)	Rod [1, 8] Total Vertical Load (lbs)	Min. [8] Vertical Support Rod Dia. (in.)	4-WAY SPLAYED RIGID BRACING REQUIREMENTS				
				Max. [2] Brace Spacing (ft.)	Brace [3] Reaction P (lbs)	Min. Brace Assembly E - Pages	Min. Brace Anchorage [6] Form Pour [4] Deck Page D1	Min. Brace Anchorage [6] Metal [5] Deck Page D2
				4-Way Splayed Brace Pattern (B20.4, B41.4, B45.4)				
11.0	10	149	3/8	40	90	R38AAEM306	N1	L1
25.0	10	338	1/2	40	204	R12AAEM306	N3	L3
35.0	10	473	1/2	40	286	R12AAEM306	N3	L3
50.0	10	675	1/2	40	408	R12AAEM406	N5	L5
65.0	10	878	1/2	40	531	R12AAEM406	N6	L6
75.0	10	1,013	1/2	40	612	R12AAEM406	N7	L7
100.0	10	1,351	1/2	40	816	R12AAEM506	N9	L9
125.0	10	1,689	1/2	40	1,021	R12AAEM506	N11	L11
150.0	10	2,026	1/2	40	1,225	R12AAEM506	N13	L13
175.0	10	2,364	1/2	40	1,429	R12AAEM506	N15	L15
200.0	10	2,560	5/8	34	1,388	R58AAEM506	N14	L14
225.0	10	2,773	5/8	30	1,378	R58AAEM506	N14	L14

1. TVL = DL + Fv + ($0.2S_{DS}$ x 0.70 x Wp). All Terms Are Working Loads. Based On Eccentric Loading, 65% Of Total Load Allocated Per Rod.
2. Reductions In Actual Installed Brace Spacing Will Result In An Equal Percentage Reduction In Brace Reaction. As An Option When This Occurs ISAT May Substitute An Alternate Anchorage From Tables D1 or D2 Which Meets or Exceeds The Lowered Brace Reaction.
3. At Max. 30 Degree Brace Inclination.
4. Min. 3,000 psi NWC. Any "N Series" Connection May Be Utilized Having A Numeric Designation Equal To Or Higher Than That Shown.
5. Min. 3,000 psi NWC or LWC. Any "L Series" Connection May Be Utilized Having A Numeric Designation Equal To Or Higher Than That Shown.
6. As An Alternate, Brace Anchorage Connections To Structure May Be Employed Using Any Detail From Structural Connections Section "D" Series Details Where Assembly Design Value Meets Or Exceeds Brace Reaction.
7. For Trade Specific Bracing Installation Notes, Refer To Page 7.1.
8. Utilize Any "G" Series Vertical Support Connection Having A Design Value Equal To Or Greater Than The Corresponding "Rod Total Vertical Load".

REVIEWED FOR CODE COMPLIANCE
HCAi
OPM-0403
BY: William Staehlin
DATE: 01-26-2024
CALIFORNIA BUILDING CODE

REGISTERED PROFESSIONAL ENGINEER
MARCIN WASAZNIK
S 6612
STRUCTURAL
STATE OF CALIFORNIA

ISAT
A Division of Tomaro Contractor Specialties

International Seismic Application Technology
14848 Northam Street, La Mirada, CA 90638
877-999-4728 (Toll Free) 714-523-0845 (Fax)
www.isateb.com

Rev.1
11/19/18
Page
C35-0.25-30

4-WAY SPLAYED RIGID BRACING REQUIREMENTS [7]:

TRAPEZE MOUNTED ELECTRICAL SYSTEMS (Conduit, Cable Tray, Bus Duct, Bus Way) ***MAXIMUM SEISMIC DESIGN FORCE = 0.25 G's***

Requires Use of ISAT Seismic Brackets. *Use of Any Non-ISAT Bracket Voids Engineering.* *2013 California Building Code Compliant*

Maximum Trapeze Load (lbs/lf)	Max. Vertical Support Spacing (ft.)	Rod [1, 8] Total Vertical Load (lbs)	Min. [8] Vertical Support Rod Dia. (in.)	4-WAY SPLAYED RIGID BRACING REQUIREMENTS				
				Max. [2] Brace Spacing (ft.)	Brace [3] Reaction P (lbs)	Min. Brace Assembly E - Pages	Min. Brace Anchorage [6] Form Pour [4] Deck Page D1	Min. Brace Anchorage [6] Metal [5] Deck Page D2
				4-Way Splayed Brace Pattern (B20.4, B41.4, B45.4)				
11.0	10	204	3/8	40	121	R38AAEM306	N2	L2
25.0	10	464	1/2	40	275	R12AAEM306	N3	L3
35.0	10	649	1/2	40	385	R12AAEM406	N4	L4
50.0	10	927	1/2	40	550	R12AAEM406	N6	L6
65.0	10	1,206	1/2	40	715	R12AAEM509	N8	L8
75.0	10	1,391	1/2	40	825	R12AAEM506	N9	L9
100.0	10	1,855	1/2	40	1,100	R12AAEM506	N12	L12
125.0	10	2,319	5/8	40	1,375	R58AAEM506	N14	L14
150.0	10	2,782	5/8	40	1,650	R58AAEM606	N17	L17
175.0	10	3,246	3/4	40	1,925	R34DGB2P09	N20	L20
200.0	10	3,710	3/4	40	2,200	R34DGB2P09	N23	L23
225.0	10	4,063	3/4	38	2,351	R34DGB2P09	N24	L24

1. TVL = DL + Fv + ($0.2S_{DS}$ x 0.70 x Wp). All Terms Are Working Loads. Based On Eccentric Loading, 65% Of Total Load Allocated Per Rod.
2. Reductions In Actual Installed Brace Spacing Will Result In An Equal Percentage Reduction In Brace Reaction. As An Option When This Occurs ISAT May Substitute An Alternate Anchorage From Tables D1 or D2 Which Meets or Exceeds The Lowered Brace Reaction.
3. At Max. 50 Degree Brace Inclination.
4. Min. 3,000 psi NWC. Any "N Series" Connection May Be Utilized Having A Numeric Designation Equal To Or Higher Than That Shown.
5. Min. 3,000 psi NWC or LWC. Any "L Series" Connection May Be Utilized Having A Numeric Designation Equal To Or Higher Than That Shown.
6. As An Alternate, Brace Anchorage Connections To Structure May Be Employed Using Any Detail From Structural Connections Section "D" Series Details Where Assembly Design Value Meets Or Exceeds Brace Reaction.
7. For Trade Specific Bracing Installation Notes, Refer To Page 7.1.
8. Utilize Any "G" Series Vertical Support Connection Having A Design Value Equal To Or Greater Than The Corresponding "Rod Total Vertical Load".

REVIEWED FOR CODE COMPLIANCE
HCAI
OPM-0403
William Staehlin
DATE: 01-26-2024
CALIFORNIA BUILDING CODE

REGISTERED PROFESSIONAL ENGINEER
MARCIN WASAZNIK
S 6612
STRUCTURAL
STATE OF CALIFORNIA

ISAT
A Division of Tomarco Contractor Specialties
International Seismic Application Technology
14848 Northam Street, La Mirada, CA 90638
877-999-4728 (Toll Free) 714-523-0845 (Fax)
www.isateb.com

Rev.1
11/19/18
Page
C35-0.25-45

4-WAY SPLAYED RIGID BRACING REQUIREMENTS [7]:

TRAPEZE MOUNTED ELECTRICAL SYSTEMS (Conduit, Cable Tray, Bus Duct, Bus Way) ***MAXIMUM SEISMIC DESIGN FORCE = 0.25 G's***

Requires Use of ISAT Seismic Brackets. Use of Any Non-ISAT Bracket Voids Engineering. 2013 California Building Code Compliant

Maximum Trapeze Load (lbs/lf)	Max. Vertical Support Spacing (ft.)	Rod [1, 8] Total Vertical Load (lbs)	Min. [8] Vertical Support Rod Dia. (in.)	4-WAY SPLAYED RIGID BRACING REQUIREMENTS				
				Max. [2] Brace Spacing (ft.)	Brace [3] Reaction P (lbs)	Min. Brace Assembly E - Pages	Min. Brace Anchorage [6] Form Pour [4] Deck Page D1	Min. Brace Anchorage [6] Metal [5] Deck Page D2
				4-Way Splayed Brace Pattern (B20.4, B41.4, B45.4)				
11.0	10	253	3/8	40	156	R38AAEM306	N2	L2
25.0	10	574	1/2	40	354	R12AAEM406	N4	L4
35.0	10	804	1/2	40	495	R12AAEM406	N5	L5
50.0	10	1,149	1/2	40	707	R12AAEM509	N8	L8
65.0	10	1,494	1/2	40	919	R12AAEM506	N10	L10
75.0	10	1,723	5/8	40	1,061	R58AAEM506	N11	L11
100.0	10	2,298	5/8	40	1,414	R58AAEM506	N15	L15
125.0	10	2,517	5/8	32	1,414	R58AAEM506	N15	L15
150.0	10	2,808	5/8	28	1,485	R58AAEM606	N15	L15
175.0	10	3,027	5/8	24	1,485	R58AAEM606	N15	L15
200.0	10	3,175	5/8	20	1,414	R58AAEM506	N15	L15
225.0	10	3,413	5/8	18	1,432	R58AAEM506	N15	L15

1. TVL = DL + Fv + ($0.2S_{DS}$ x 0.70 x Wp). All Terms Are Working Loads. Based On Eccentric Loading, 65% Of Total Load Allocated Per Rod.
2. Reductions In Actual Installed Brace Spacing Will Result In An Equal Percentage Reduction In Brace Reaction. As An Option When This Occurs ISAT May Substitute An Alternate Anchorage From Tables D1 or D2 Which Meets or Exceeds The Lowered Brace Reaction.
3. At Max. 60 Degree Brace Inclination.
4. Min. 3,000 psi NWC. Any "N Series" Connection May Be Utilized Having A Numeric Designation Equal To Or Higher Than That Shown.
5. Min. 3,000 psi NWC or LWC. Any "L Series" Connection May Be Utilized Having A Numeric Designation Equal To Or Higher Than That Shown.
6. As An Alternate, Brace Anchorage Connections To Structure May Be Employed Using Any Detail From Structural Connections Section "D" Series Details Where Assembly Design Value Meets Or Exceeds Brace Reaction.
7. For Trade Specific Bracing Installation Notes, Refer To Page 7.1.
8. Utilize Any "G" Series Vertical Support Connection Having A Design Value Equal To Or Greater Than The Corresponding "Rod Total Vertical Load".

REVIEWED FOR CODE COMPLIANCE
HCAi
OPM-0403
By: William Staehlin
DATE: 01-26-2024
CALIFORNIA BUILDING CODE

REGISTERED PROFESSIONAL ENGINEER
MARCIN WASAZNIK
S-6612
STRUCTURAL
STATE OF CALIFORNIA

ISAT
A Division of Tomarco Contractor Specialties

International Seismic Application Technology
14848 Northam Street, La Mirada, CA 90638
877-999-4728 (Toll Free) 714-523-0845 (Fax)
www.isateb.com

Rev.1
11/19/18
Page
C35-0.25-60

4-WAY SPLAYED RIGID BRACING REQUIREMENTS [7]:

TRAPEZE MOUNTED ELECTRICAL SYSTEMS (Conduit, Cable Tray, Bus Duct, Bus Way) — **MAXIMUM SEISMIC DESIGN FORCE = 0.50 G's**

Requires Use of ISAT Seismic Brackets. Use of Any Non-ISAT Bracket Voids Engineering. 2013 California Building Code Compliant

Maximum Trapeze Load (lbs/lf)	Max. Vertical Support Spacing (ft.)	Rod [1, 8] Total Vertical Load (lbs)	Min. [8] Vertical Support Rod Dia. (in.)	4-WAY SPLAYED RIGID BRACING REQUIREMENTS				
				Max. [2] Brace Spacing (ft.)	Brace [3] Reaction P (lbs)	Min. Brace Assembly E - Pages	Min. Brace Anchorage [6] Form Pour [4] Deck Page D1	Min. Brace Anchorage [6] Metal [5] Deck Page D2
				4-Way Splayed Brace Pattern (B20.4, B41.4, B45.4)				
11.0	10	201	3/8	40	180	R38AAEM306	N2	L2
25.0	10	456	1/2	40	408	R12AAEM406	N5	L5
35.0	10	639	1/2	40	572	R12AAEM406	N6	L6
50.0	10	912	1/2	40	816	R12AAEM506	N9	L9
65.0	10	1,186	1/2	40	1,061	R12AAEM506	N11	L11
75.0	10	1,368	1/2	40	1,225	R12AAEM506	N13	L13
100.0	10	1,682	1/2	34	1,388	R12AAEM506	N14	L14
125.0	10	1,925	1/2	28	1,429	R12AAEM506	N15	L15
150.0	10	2,097	1/2	22	1,347	R12AAEM506	N14	L14
175.0	10	2,364	1/2	20	1,429	R12AAEM506	N15	L15
200.0	10	2,513	5/8	16	1,306	R58AAEM506	N14	L14
225.0	10	2,720	5/8	14	1,286	R58AAEM506	N13	L13

1. TVL = DL + Fv + ($0.2S_{DS}$ x 0.70 x Wp). All Terms Are Working Loads. Based On Eccentric Loading, 65% Of Total Load Allocated Per Rod.
2. Reductions In Actual Installed Brace Spacing Will Result In An Equal Percentage Reduction In Brace Reaction. As An Option When This Occurs ISAT May Substitute An Alternate Anchorage From Tables D1 or D2 Which Meets or Exceeds The Lowered Brace Reaction.
3. At Max. 30 Degree Brace Inclination.
4. Min. 3,000 psi NWC. Any "N Series" Connection May Be Utilized Having A Numeric Designation Equal To Or Higher Than That Shown.
5. Min. 3,000 psi NWC or LWC. Any "L Series" Connection May Be Utilized Having A Numeric Designation Equal To Or Higher Than That Shown.
6. As An Alternate, Brace Anchorage Connections To Structure May Be Employed Using Any Detail From Structural Connections Section "D" Series Details Where Assembly Design Value Meets Or Exceeds Brace Reaction.
7. For Trade Specific Bracing Installation Notes, Refer To Page 7.1.
8. Utilize Any "G" Series Vertical Support Connection Having A Design Value Equal To Or Greater Than The Corresponding "Rod Total Vertical Load".

REVIEWED FOR CODE COMPLIANCE
HCAI
OPM-0403
BY: William Staehlin
DATE: 01-26-2024
CALIFORNIA BUILDING CODE

REGISTERED PROFESSIONAL ENGINEER MARCIN WASAZNIK S-6612 STRUCTURAL STATE OF CALIFORNIA

ISAT
A Division of Tomarco Contractor Specialties
International Seismic Application Technology
14848 Northam Street, La Mirada, CA 90638
877-999-4728 (Toll Free) 714-523-0845 (Fax)
www.isateb.com

Rev.1
11/19/18
Page
C35-0.5-30

4-WAY SPLAYED RIGID BRACING REQUIREMENTS [7]:

TRAPEZE MOUNTED ELECTRICAL SYSTEMS (Conduit, Cable Tray, Bus Duct, Bus Way) ***MAXIMUM SEISMIC DESIGN FORCE = 0.50 G's***

Requires Use of ISAT Seismic Brackets. Use of Any Non-ISAT Bracket Voids Engineering. 2013 California Building Code Compliant

Maximum Trapeze Load (lbs/lf)	Max. Vertical Support Spacing (ft.)	Rod [1, 8] Total Vertical Load (lbs)	Min. [8] Vertical Support Rod Dia. (in.)	4-WAY SPLAYED RIGID BRACING REQUIREMENTS				
				Max. [2] Brace Spacing (ft.)	Brace [3] Reaction P (lbs)	Min. Brace Assembly E - Pages	Min. Brace Anchorage [6] Form Pour [4] Deck Page D1	Min. Brace Anchorage [6] Metal [5] Deck Page D2
				4-Way Splayed Brace Pattern (B20.4, B41.4, B45.4)				
11.0	10	312	3/8	40	242	R38AAEM306	N3	L3
25.0	10	708	1/2	40	550	R12AAEM406	N6	L6
35.0	10	991	1/2	40	770	R12AAEM509	N8	L8
50.0	10	1,416	1/2	40	1,100	R12AAEM506	N12	L12
65.0	10	1,841	5/8	40	1,430	R58AAEM506	N15	L15
75.0	10	2,124	3/4	40	1,650	R34CFB2P12	N17	L17
100.0	10	2,832	3/4	40	2,200	R34DGB2P09	N23	L23
125.0	10	3,051	3/4	32	2,200	R34DGB2P09	N23	L23
150.0	10	3,222	3/4	26	2,145	R34DGB2P09	N22	L22
175.0	10	3,417	3/4	22	2,118	R34DGB2P09	N22	L22
200.0	10	3,710	3/4	20	2,200	R34DGB2P09	N23	L23
225.0	10	3,953	3/4	18	2,228	R34DGB2P09	N23	L23

1. TVL = DL + Fv + ($0.2S_{DS}$ x 0.70 x Wp). All Terms Are Working Loads. Based On Eccentric Loading, 65% Of Total Load Allocated Per Rod.
2. Reductions In Actual Installed Brace Spacing Will Result In An Equal Percentage Reduction In Brace Reaction. As An Option When This Occurs ISAT May Substitute An Alternate Anchorage From Tables D1 or D2 Which Meets or Exceeds The Lowered Brace Reaction.
3. At Max. 50 Degree Brace Inclination.
4. Min. 3,000 psi NWC. Any "N Series" Connection May Be Utilized Having A Numeric Designation Equal To Or Higher Than That Shown.
5. Min. 3,000 psi NWC or LWC. Any "L Series" Connection May Be Utilized Having A Numeric Designation Equal To Or Higher Than That Shown.
6. As An Alternate, Brace Anchorage Connections To Structure May Be Employed Using Any Detail From Structural Connections Section "D" Series Details Where Assembly Design Value Meets Or Exceeds Brace Reaction.
7. For Trade Specific Bracing Installation Notes, Refer To Page 7.1.
8. Utilize Any "G" Series Vertical Support Connection Having A Design Value Equal To Or Greater Than The Corresponding "Rod Total Vertical Load".

REVIEWED FOR CODE COMPLIANCE
ICC-ES
OPM-0403
By: William Staehlin
DATE: 01-26-2024
CALIFORNIA BUILDING CODE

REGISTERED PROFESSIONAL ENGINEER
MARCIN WASAZNIK
S-6612
STRUCTURAL
STATE OF CALIFORNIA

ISAT
A Division of Tomarco Contractor Specialties

International Seismic Application Technology
14848 Northam Street, La Mirada, CA 90638
877-999-4728 (Toll Free) 714-523-0845 (Fax)
www.isatsb.com

Rev.1
11/19/18
Page
C35-0.5-45

4-WAY SPLAYED RIGID BRACING REQUIREMENTS [7]:

TRAPEZE MOUNTED ELECTRICAL SYSTEMS (Conduit, Cable Tray, Bus Duct, Bus Way) ***MAXIMUM SEISMIC DESIGN FORCE = 0.50 G's***

Requires Use of ISAT Seismic Brackets. Use of Any Non-ISAT Bracket Voids Engineering. 2013 California Building Code Compliant

Maximum Trapeze Load (lbs/lf)	Max. Vertical Support Spacing (ft.)	Rod [1, 8] Total Vertical Load (lbs)	Min. [8] Vertical Support Rod Dia. (in.)	4-WAY SPLAYED RIGID BRACING REQUIREMENTS				
				Max. [2] Brace Spacing (ft.)	Brace [3] Reaction P (lbs)	Min. Brace Assembly E - Pages	Min. Brace Anchorage [6] Form Pour [4] Deck Page D1	Min. Brace Anchorage [6] Metal [5] Deck Page D2
				4-Way Splayed Brace Pattern (B20.4, B41.4, B45.4)				
11.0	10	409	3/8	40	311	R38AAEM409	N4	L4
25.0	10	930	1/2	40	707	R12AAEM509	N8	L8
35.0	10	1,301	1/2	40	990	R12AAEM506	N10	L10
50.0	10	1,859	5/8	40	1,414	R58AAEM506	N15	L15
65.0	10	1,955	5/8	30	1,379	R58AAEM506	N14	L14
75.0	10	2,043	5/8	26	1,379	R58AAEM506	N14	L14
100.0	10	2,298	5/8	20	1,414	R58AAEM506	N15	L15
125.0	10	2,517	5/8	16	1,414	R58AAEM506	N15	L15
150.0	10	2,808	5/8	14	1,485	R58AAEM606	N15	L15
175.0	10	3,027	5/8	12	1,485	R58AAEM606	N15	L15
200.0	10	3,175	5/8	10	1,414	R58AAEM506	N15	L15

1. TVL = DL + Fv + ($0.2S_{DS}$ x 0.70 x Wp). All Terms Are Working Loads. Based On Eccentric Loading, 65% Of Total Load Allocated Per Rod.
2. Reductions In Actual Installed Brace Spacing Will Result In An Equal Percentage Reduction In Brace Reaction. As An Option When This Occurs ISAT May Substitute An Alternate Anchorage From Tables D1 or D2 Which Meets or Exceeds The Lowered Brace Reaction.
3. At Max. 60 Degree Brace Inclination.
4. Min. 3,000 psi NWC. Any "N Series" Connection May Be Utilized Having A Numeric Designation Equal To Or Higher Than That Shown.
5. Min. 3,000 psi NWC or LWC. Any "L Series" Connection May Be Utilized Having A Numeric Designation Equal To Or Higher Than That Shown.
6. As An Alternate, Brace Anchorage Connections To Structure May Be Employed Using Any Detail From Structural Connections Section "D" Series Details Where Assembly Design Value Meets Or Exceeds Brace Reaction.
7. For Trade Specific Bracing Installation Notes, Refer To Page 7.1.
8. Utilize Any "G" Series Vertical Support Connection Having A Design Value Equal To Or Greater Than The Corresponding "Rod Total Vertical Load".

REVIEWED FOR CODE COMPLIANCE
HCAi
OPM-0403
By: William Staehlin
DATE: 01-26-2024
CALIFORNIA BUILDING CODES

REGISTERED PROFESSIONAL ENGINEER
MARCIN WASAZNIK
S-6612
STRUCTURAL
STATE OF CALIFORNIA

ISAT
A Division of Tomarco Contractor Specialties
International Seismic Application Technology
14848 Northam Street, La Mirada, CA 90638
877-999-4728 (Toll Free) 714-523-0845 (Fax)
www.isatsb.com

Rev.1
11/19/18
Page
C35-0.5-60

4-WAY SPLAYED RIGID BRACING REQUIREMENTS [7]:

TRAPEZE MOUNTED ELECTRICAL SYSTEMS (Conduit, Cable Tray, Bus Duct, Bus Way) ***MAXIMUM SEISMIC DESIGN FORCE = 0.75 G's***

Requires Use of ISAT Seismic Brackets. Use of Any Non-ISAT Bracket Voids Engineering. 2013 California Building Code Compliant

Maximum Trapeze Load (lbs/lf)	Max. Vertical Support Spacing (ft.)	Rod [1, 8] Total Vertical Load (lbs)	Min. [8] Vertical Support Rod Dia. (in.)	4-WAY SPLAYED RIGID BRACING REQUIREMENTS				
				Max. [2] Brace Spacing (ft.)	Brace [3] Reaction P (lbs)	Min. Brace Assembly E - Pages	Min. Brace Anchorage [6] Form Pour [4] Deck Page D1	Min. Brace Anchorage [6] Metal [5] Deck Page D2
				4-Way Splayed Brace Pattern (B20.4, B41.4, B45.4)				
11.0	10	253	3/8	40	269	R38AAEM306	N3	L3
25.0	10	574	1/2	40	612	R12AAEM406	N7	L7
35.0	10	804	1/2	40	857	R12AAEM506	N9	L9
50.0	10	1,149	1/2	40	1,225	R12AAEM506	N13	L13
65.0	10	1,401	1/2	36	1,433	R12AAEM506	N15	L15
75.0	10	1,457	1/2	30	1,378	R12AAEM506	N14	L14
100.0	10	1,659	1/2	22	1,347	R12AAEM506	N14	L14
125.0	10	1,896	1/2	18	1,378	R12AAEM506	N14	L14
150.0	10	2,062	1/2	14	1,286	R12AAEM506	N13	L13
175.0	10	2,281	1/2	12	1,286	R12AAEM506	N13	L13
200.0	10	2,465	1/2	10	1,225	R12AAEM506	N13	L13
225.0	10	2,773	5/8	10	1,378	R58AAEM506	N14	L14

1. TVL = DL + Fv + ($0.2S_{DS}$ x 0.70 x Wp). All Terms Are Working Loads. Based On Eccentric Loading, 65% Of Total Load Allocated Per Rod.
2. Reductions In Actual Installed Brace Spacing Will Result In An Equal Percentage Reduction In Brace Reaction. As An Option When This Occurs ISAT May Substitute An Alternate Anchorage From Tables D1 or D2 Which Meets or Exceeds The Lowered Brace Reaction.
3. At Max. 30 Degree Brace Inclination.
4. Min. 3,000 psi NWC. Any "N Series" Connection May Be Utilized Having A Numeric Designation Equal To Or Higher Than That Shown.
5. Min. 3,000 psi NWC or LWC. Any "L Series" Connection May Be Utilized Having A Numeric Designation Equal To Or Higher Than That Shown.
6. As An Alternate, Brace Anchorage Connections To Structure May Be Employed Using Any Detail From Structural Connections Section "D" Series Details Where Assembly Design Value Meets Or Exceeds Brace Reaction.
7. For Trade Specific Bracing Installation Notes, Refer To Page 7.1.
8. Utilize Any "G" Series Vertical Support Connection Having A Design Value Equal To Or Greater Than The Corresponding "Rod Total Vertical Load".

REVIEWED FOR CODE COMPLIANCE
HCAi
OPM-0403
By: William Staehlin
DATE: 01-26-2024
CALIFORNIA BUILDING CODE

REGISTERED PROFESSIONAL ENGINEER MARCIN WASAZNIK S-6612 STRUCTURAL STATE OF CALIFORNIA

ISAT
A Division of Tomarco Contractor Specialties
International Seismic Application Technology
14848 Northam Street, La Mirada, CA 90638
877-999-4728 (Toll Free) 714-523-0845 (Fax)
www.isatsb.com

Rev.1
11/19/18
Page
C35-0.75-30

4-WAY SPLAYED RIGID BRACING REQUIREMENTS [7]:

TRAPEZE MOUNTED ELECTRICAL SYSTEMS (Conduit, Cable Tray, Bus Duct, Bus Way) — **MAXIMUM SEISMIC DESIGN FORCE = 0.75 G's**

Requires Use of ISAT Seismic Brackets. Use of Any Non-ISAT Bracket Voids Engineering. 2013 California Building Code Compliant

Maximum Trapeze Load (lbs/lf)	Max. Vertical Support Spacing (ft.)	Rod [1, 8] Total Vertical Load (lbs)	Min. [8] Vertical Support Rod Dia. (in.)	4-WAY SPLAYED RIGID BRACING REQUIREMENTS				
				Max. [2] Brace Spacing (ft.)	Brace [3] Reaction P (lbs)	Min. Brace Assembly E - Pages	Min. Brace Anchorage [6] Form Pour [4] Deck Page D1	Min. Brace Anchorage [6] Metal [5] Deck Page D2
				4-Way Splayed Brace Pattern (B20.4, B41.4, B45.4)				
11.0	10	419	3/8	40	363	R38AAEM406	N4	L4
25.0	10	952	1/2	40	825	R12AAEM506	N9	L9
35.0	10	1,333	5/8	40	1,155	R58AAEM506	N12	L12
50.0	10	1,905	3/4	40	1,650	R34CFB2P12	N17	L17
65.0	10	2,476	3/4	40	2,145	R34DGB2P09	N22	L22
75.0	10	2,527	3/4	34	2,104	R34DGB2P09	N22	L22
100.0	10	2,783	3/4	26	2,145	R34DGB2P09	N22	L22
125.0	10	2,929	3/4	20	2,063	R34DGB2P09	N21	L21
150.0	10	3,295	3/4	18	2,228	R34DGB2P09	N23	L23
175.0	10	3,331	3/4	14	2,021	R34DGB2P09	N21	L21
200.0	10	3,807	3/4	14	2,310	R34DGB2P09	N24	L24
225.0	10	3,953	3/4	12	2,228	R34DGB2P09	N23	L23

1. TVL = DL + Fv + ($0.2S_{DS}$ x 0.70 x Wp). All Terms Are Working Loads. Based On Eccentric Loading, 65% Of Total Load Allocated Per Rod.
2. Reductions In Actual Installed Brace Spacing Will Result In An Equal Percentage Reduction In Brace Reaction. As An Option When This Occurs ISAT May Substitute An Alternate Anchorage From Tables D1 or D2 Which Meets or Exceeds The Lowered Brace Reaction.
3. At Max. 50 Degree Brace Inclination.
4. Min. 3,000 psi NWC. Any "N Series" Connection May Be Utilized Having A Numeric Designation Equal To Or Higher Than That Shown.
5. Min. 3,000 psi NWC or LWC. Any "L Series" Connection May Be Utilized Having A Numeric Designation Equal To Or Higher Than That Shown.
6. As An Alternate, Brace Anchorage Connections To Structure May Be Employed Using Any Detail From Structural Connections Section "D" Series Details Where Assembly Design Value Meets Or Exceeds Brace Reaction.
7. For Trade Specific Bracing Installation Notes, Refer To Page 7.1.
8. Utilize Any "G" Series Vertical Support Connection Having A Design Value Equal To Or Greater Than The Corresponding "Rod Total Vertical Load".

REVIEWED FOR CODE COMPLIANCE BY: HCAI OPM-0403 William Staehlin DATE: 01-26-2024 CALIFORNIA BUILDING CODES

REGISTERED PROFESSIONAL ENGINEER MARCIN WASAZNIK S-6612 STRUCTURAL STATE OF CALIFORNIA

ISAT
A Division of Tomarco Contractor Specialties
International Seismic Application Technology
14848 Northam Street, La Mirada, CA 90638
877-999-4728 (Toll Free) 714-523-0845 (Fax)
www.isatsb.com

Rev.1
11/19/18
Page
C35-0.75-45

4-WAY SPLAYED RIGID BRACING REQUIREMENTS [7]:

TRAPEZE MOUNTED ELECTRICAL SYSTEMS (Conduit, Cable Tray, Bus Duct, Bus Way) ***MAXIMUM SEISMIC DESIGN FORCE = 0.75 G's***

Requires Use of ISAT Seismic Brackets. Use of Any Non-ISAT Bracket Voids Engineering. 2013 California Building Code Compliant

Maximum Trapeze Load (lbs/lf)	Max. Vertical Support Spacing (ft.)	Rod [1, 8] Total Vertical Load (lbs)	Min. [8] Vertical Support Rod Dia. (in.)	4-WAY SPLAYED RIGID BRACING REQUIREMENTS				
				Max. [2] Brace Spacing (ft.)	Brace [3] Reaction P (lbs)	Min. Brace Assembly E - Pages	Min. Brace Anchorage [6] Form Pour [4] Deck Page D1	Min. Brace Anchorage [6] Metal [5] Deck Page D2
				4-Way Splayed Brace Pattern (B20.4, B41.4, B45.4)				
11.0	10	565	1/2	40	467	R12AAEM406	N5	L5
25.0	10	1,285	5/8	40	1,061	R58AAEM506	N11	L11
35.0	10	1,649	5/8	36	1,336	R58AAEM506	N14	L14
50.0	10	1,824	5/8	26	1,379	R58AAEM506	N14	L14
65.0	10	1,955	5/8	20	1,379	R58AAEM506	N14	L14
75.0	10	2,096	5/8	18	1,432	R58AAEM506	N15	L15
100.0	10	2,156	5/8	12	1,273	R58AAEM506	N13	L13
125.0	10	2,428	5/8	10	1,326	R58AAEM506	N14	L14

1. TVL = DL + Fv + ($0.2S_{DS}$ x 0.70 x Wp). All Terms Are Working Loads. Based On Eccentric Loading, 65% Of Total Load Allocated Per Rod.
2. Reductions In Actual Installed Brace Spacing Will Result In An Equal Percentage Reduction In Brace Reaction. As An Option When This Occurs ISAT May Substitute An Alternate Anchorage From Tables D1 or D2 Which Meets or Exceeds The Lowered Brace Reaction.
3. At Max. 60 Degree Brace Inclination.
4. Min. 3,000 psi NWC. Any "N Series" Connection May Be Utilized Having A Numeric Designation Equal To Or Higher Than That Shown.
5. Min. 3,000 psi NWC or LWC. Any "L Series" Connection May Be Utilized Having A Numeric Designation Equal To Or Higher Than That Shown.
6. As An Alternate, Brace Anchorage Connections To Structure May Be Employed Using Any Detail From Structural Connections Section "D" Series Details Where Assembly Design Value Meets Or Exceeds Brace Reaction.
7. For Trade Specific Bracing Installation Notes, Refer To Page 7.1.
8. Utilize Any "G" Series Vertical Support Connection Having A Design Value Equal To Or Greater Than The Corresponding "Rod Total Vertical Load".

REVIEWED FOR CODE COMPLIANCE
HCAI
OPM-0403
BY: William Staehlin
DATE: 01-26-2024
CALIFORNIA BUILDING CODE, 2019

REGISTERED PROFESSIONAL ENGINEER
MARCIN WASAZNIK
S 6612
STRUCTURAL
STATE OF CALIFORNIA

ISAT
A Division of Tomarco Contractor Specialties

International Seismic Application Technology
14848 Northam Street, La Mirada, CA 90638
877-000-4728 (Toll Free) 714-523-0845 (Fax)
www.isatsb.com

Rev.1
11/19/18
Page
C35-0.75-60

4-WAY SPLAYED RIGID BRACING REQUIREMENTS [7]:

TRAPEZE MOUNTED ELECTRICAL SYSTEMS (Conduit, Cable Tray, Bus Duct, Bus Way) — **MAXIMUM SEISMIC DESIGN FORCE = 1.00 G's**

Requires Use of ISAT Seismic Brackets. Use of Any Non-ISAT Bracket Voids Engineering. 2013 California Building Code Compliant

Maximum Trapeze Load (lbs/lf)	Max. Vertical Support Spacing (ft.)	Rod [1, 8] Total Vertical Load (lbs)	Min. [8] Vertical Support Rod Dia. (in.)	4-WAY SPLAYED RIGID BRACING REQUIREMENTS				
				Max. [2] Brace Spacing (ft.)	Brace [3] Reaction P (lbs)	Min. Brace Assembly E - Pages	Min. Brace Anchorage [6] Form Pour [4] Deck Page D1	Min. Brace Anchorage [6] Metal [5] Deck Page D2
				4-Way Splayed Brace Pattern (B20.4, B41.4, B45.4)				
11.0	10	305	3/8	40	359	R38AAEM406	N4	L4
25.0	10	693	1/2	40	816	R12AAEM506	N9	L9
35.0	10	970	1/2	40	1,143	R12AAEM506	N12	L12
50.0	10	1,244	1/2	34	1,388	R12AAEM506	N14	L14
65.0	10	1,371	1/2	26	1,380	R12AAEM506	N14	L14
75.0	10	1,439	1/2	22	1,347	R12AAEM506	N14	L14
100.0	10	1,635	1/2	16	1,306	R12AAEM506	N14	L14
125.0	10	1,925	1/2	14	1,429	R12AAEM506	N15	L15
150.0	10	2,026	1/2	10	1,225	R12AAEM506	N13	L13
175.0	10	2,364	1/2	10	1,429	R12AAEM506	N15	L15

1. TVL = DL + Fv + ($0.2S_{DS}$ x 0.70 x Wp). All Terms Are Working Loads. Based On Eccentric Loading, 65% Of Total Load Allocated Per Rod.
2. Reductions In Actual Installed Brace Spacing Will Result In An Equal Percentage Reduction In Brace Reaction. As An Option When This Occurs ISAT May Substitute An Alternate Anchorage From Tables D1 or D2 Which Meets or Exceeds The Lowered Brace Reaction.
3. At Max. 30 Degree Brace Inclination.
4. Min. 3,000 psi NWC. Any "N Series" Connection May Be Utilized Having A Numeric Designation Equal To Or Higher Than That Shown.
5. Min. 3,000 psi NWC or LWC. Any "L Series" Connection May Be Utilized Having A Numeric Designation Equal To Or Higher Than That Shown.
6. As An Alternate, Brace Anchorage Connections To Structure May Be Employed Using Any Detail From Structural Connections Section "D" Series Details Where Assembly Design Value Meets Or Exceeds Brace Reaction.
7. For Trade Specific Bracing Installation Notes, Refer To Page 7.1.
8. Utilize Any "G" Series Vertical Support Connection Having A Design Value Equal To Or Greater Than The Corresponding "Rod Total Vertical Load".

REVIEWED FOR CODE COMPLIANCE
HCAI
OPM-0403
BY: William Staehlin
DATE: 01-26-2024
CALIFORNIA BUILDING CODE, 2019

REGISTERED PROFESSIONAL ENGINEER MARCIN WASAZNIK S-6612 STRUCTURAL STATE OF CALIFORNIA

ISAT
A Division of Tomarco Contractor Specialties
International Seismic Application Technology
14848 Northam Street, La Mirada, CA 90638
877-999-4728 (Toll Free) 714-523-0845 (Fax)
www.isatsb.com

Rev.1
11/19/18
Page
C35-1-30

4-WAY SPLAYED RIGID BRACING REQUIREMENTS [7]:

TRAPEZE MOUNTED ELECTRICAL SYSTEMS (Conduit, Cable Tray, Bus Duct, Bus Way) ***MAXIMUM SEISMIC DESIGN FORCE = 1.00 G's***

Requires Use of ISAT Seismic Brackets. Use of Any Non-ISAT Bracket Voids Engineering. 2013 California Building Code Compliant

Maximum Trapeze Load (lbs/lf)	Max. Vertical Support Spacing (ft.)	Rod [1, 8] Total Vertical Load (lbs)	Min. [8] Vertical Support Rod Dia. (in.)	4-WAY SPLAYED RIGID BRACING REQUIREMENTS				
				Max. [2] Brace Spacing (ft.)	Brace [3] Reaction P (lbs)	Min. Brace Assembly E - Pages	Min. Brace Anchorage [6] Form Pour [4] Deck Page D1	Min. Brace Anchorage [6] Metal [5] Deck Page D2
				4-Way Splayed Brace Pattern (B20.4, B41.4, B45.4)				
11.0	10	527	1/2	40	484	R12AAEM406	N5	L5
25.0	10	1,197	1/2	40	1,100	R12AAEM506	N12	L12
35.0	10	1,675	5/8	40	1,540	R58AAEM606	N16	L16
50.0	10	2,198	3/4	36	1,980	R34DGB2P09	N20	L20
65.0	10	2,476	3/4	30	2,145	R34DGB2P09	N22	L22
75.0	10	2,564	3/4	26	2,145	R34DGB2P09	N22	L22
100.0	10	2,832	3/4	20	2,200	R34DGB2P09	N23	L23
125.0	10	3,051	3/4	16	2,200	R34DGB2P09	N23	L23
150.0	10	3,075	3/4	12	1,980	R34DGB2P09	N20	L20
175.0	10	3,246	3/4	10	1,925	R34DGB2P09	N20	L20
200.0	10	3,710	3/4	10	2,200	R34DGB2P09	N23	L23

1. TVL = DL + Fv + ($0.2S_{DS}$ x 0.70 x Wp). All Terms Are Working Loads. Based On Eccentric Loading, 65% Of Total Load Allocated Per Rod.
2. Reductions In Actual Installed Brace Spacing Will Result In An Equal Percentage Reduction In Brace Reaction. As An Option When This Occurs ISAT May Substitute An Alternate Anchorage From Tables D1 or D2 Which Meets or Exceeds The Lowered Brace Reaction.
3. At Max. 50 Degree Brace Inclination.
4. Min. 3,000 psi NWC. Any "N Series" Connection May Be Utilized Having A Numeric Designation Equal To Or Higher Than That Shown.
5. Min. 3,000 psi NWC or LWC. Any "L Series" Connection May Be Utilized Having A Numeric Designation Equal To Or Higher Than That Shown.
6. As An Alternate, Brace Anchorage Connections To Structure May Be Employed Using Any Detail From Structural Connections Section "D" Series Details Where Assembly Design Value Meets Or Exceeds Brace Reaction.
7. For Trade Specific Bracing Installation Notes, Refer To Page 7.1.
8. Utilize Any "G" Series Vertical Support Connection Having A Design Value Equal To Or Greater Than The Corresponding "Rod Total Vertical Load".

REVIEWED FOR CODE COMPLIANCE
HCAI
OPM-0403
By: William Staehlin
DATE: 01-26-2024
CALIFORNIA BUILDING CODES

REGISTERED PROFESSIONAL ENGINEER MARCIN WASAZNIK S-6612 STRUCTURAL STATE OF CALIFORNIA

ISAT
A Division of Tomarco Contractor Specialties
International Seismic Application Technology
14848 Northam Street, La Mirada, CA 90638
877-999-4728 (Toll Free) 714-523-0845 (Fax)
www.isatsb.com

Rev.1
11/19/18
Page
C35-1-45

4-WAY SPLAYED RIGID BRACING REQUIREMENTS [7]:

TRAPEZE MOUNTED ELECTRICAL SYSTEMS (Conduit, Cable Tray, Bus Duct, Bus Way) ***MAXIMUM SEISMIC DESIGN FORCE = 1.00 G's***

Requires Use of ISAT Seismic Brackets. *Use of Any Non-ISAT Bracket Voids Engineering.* *2013 California Building Code Compliant*

Maximum Trapeze Load (lbs/lf)	Max. Vertical Support Spacing (ft.)	Rod [1, 8] Total Vertical Load (lbs)	Min. [8] Vertical Support Rod Dia. (in.)	4-WAY SPLAYED RIGID BRACING REQUIREMENTS				
				Max. [2] Brace Spacing (ft.)	Brace [3] Reaction P (lbs)	Min. Brace Assembly E - Pages	Min. Brace Anchorage [6] Form Pour [4] Deck Page D1	Min. Brace Anchorage [6] Metal [5] Deck Page D2
				4-Way Splayed Brace Pattern (B20.4, B41.4, B45.4)				
11.0	10	721	1/2	40	622	R12AAEM406	N7	L7
25.0	10	1,604	5/8	39	1,379	R58AAEM506	N14	L14
35.0	10	1,699	5/8	28	1,386	R58AAEM506	N14	L14
50.0	10	1,859	5/8	20	1,414	R58AAEM506	N15	L15
65.0	10	1,863	5/8	14	1,287	R58AAEM506	N13	L13
75.0	10	1,936	5/8	12	1,273	R58AAEM506	N13	L13
100.0	10	2,298	5/8	10	1,414	R58AAEM506	N15	L15

1. TVL = DL + Fv + ($0.2S_{DS}$ x 0.70 x Wp). All Terms Are Working Loads. Based On Eccentric Loading, 65% Of Total Load Allocated Per Rod.
2. Reductions In Actual Installed Brace Spacing Will Result In An Equal Percentage Reduction In Brace Reaction. As An Option When This Occurs ISAT May Substitute An Alternate Anchorage From Tables D1 or D2 Which Meets or Exceeds The Lowered Brace Reaction.
3. At Max. 60 Degree Brace Inclination.
4. Min. 3,000 psi NWC. Any "N Series" Connection May Be Utilized Having A Numeric Designation Equal To Or Higher Than That Shown.
5. Min. 3,000 psi NWC or LWC. Any "L Series" Connection May Be Utilized Having A Numeric Designation Equal To Or Higher Than That Shown.
6. As An Alternate, Brace Anchorage Connections To Structure May Be Employed Using Any Detail From Structural Connections Section "D" Series Details Where Assembly Design Value Meets Or Exceeds Brace Reaction.
7. For Trade Specific Bracing Installation Notes, Refer To Page 7.1.
8. Utilize Any "G" Series Vertical Support Connection Having A Design Value Equal To Or Greater Than The Corresponding "Rod Total Vertical Load".

REVIEWED FOR CODE COMPLIANCE
HCAI
OPM-0403
By: William Staehlin
DATE: 01-26-2024
CALIFORNIA BUILDING CODE, 2022

REGISTERED PROFESSIONAL ENGINEER
MARCIN WASAZNIK
S-6612
STRUCTURAL
STATE OF CALIFORNIA

ISAT
A Division of Tamarco Contractor Specialties
International Seismic Application Technology
14848 Northam Street, La Mirada, CA 90638
877-999-4728 (Toll Free) 714-523-0845 (Fax)
www.isatsb.com

Rev.1
11/19/18
Page
C35-1-60

4-WAY SPLAYED RIGID BRACING REQUIREMENTS [7]:

2-TIERED TRAPEZE MOUNTED ELECTRICAL SYSTEMS (Conduit, Cable Tray, Bus Duct, Bus Way) **MAXIMUM SEISMIC DESIGN FORCE = 0.25 G's**

Requires Use of ISAT Seismic Brackets. Use of Any Non-ISAT Bracket Voids Engineering. 2013 California Building Code Compliant

Combined 2-Tier Maximum Trapeze Load (lbs/lf)	Max. Vertical Support Spacing (ft.)	Rod [1, 8] Total Vertical Load (lbs)	Min. [8] Vertical Support Rod Dia. (in.)	4-WAY SPLAYED RIGID BRACING REQUIREMENTS				
				Max. [2] Brace Spacing (ft.)	Brace [3] Reaction P (lbs)	Min. Brace Assembly E - Pages	Min. Brace Anchorage [6] Form Pour [4] Deck Page D1	Min. Brace Anchorage [6] Metal [5] Deck Page D2
				4-Way Splayed Brace Pattern (B21.4)				
11.0	10	149	3/8	40	45	R38AAEM306	N1	L1
25.0	10	338	1/2	40	102	R12AAEM306	N2	L2
35.0	10	473	1/2	40	143	R12AAEM306	N2	L2
50.0	10	675	1/2	40	204	R12AAEM306	N3	L3
65.0	10	878	1/2	40	265	R12AAEM306	N3	L3
75.0	10	1,013	1/2	40	306	R12AAEM409	N4	L4
100.0	10	1,351	1/2	40	408	R12AAEM406	N5	L5
125.0	10	1,689	1/2	40	510	R12AAEM406	N6	L6
150.0	10	2,026	1/2	40	612	R12AAEM406	N7	L7
175.0	10	2,364	1/2	40	714	R12AAEM509	N8	L8
200.0	10	2,702	5/8	40	816	R58AAEM506	N9	L9
225.0	10	3,040	5/8	40	919	R58AAEM506	N10	L10

1. TVL = DL + Fv + ($0.2S_{DS}$ x 0.70 x Wp). All Terms Are Working Loads. Based On Eccentric Loading, 65% Of Total Load Allocated Per Rod.
2. Reductions In Actual Installed Brace Spacing Will Result In An Equal Percentage Reduction In Brace Reaction. As An Option When This Occurs ISAT May Substitute An Alternate Anchorage From Tables D1 or D2 Which Meets or Exceeds The Lowered Brace Reaction.
3. At Max. 30 Degree Brace Inclination.
4. Min. 3,000 psi NWC. Any "N Series" Connection May Be Utilized Having A Numeric Designation Equal To Or Higher Than That Shown.
5. Min. 3,000 psi NWC or LWC. Any "L Series" Connection May Be Utilized Having A Numeric Designation Equal To Or Higher Than That Shown.
6. As An Alternate, Brace Anchorage Connections To Structure May Be Employed Using Any Detail From Structural Connections Section "D" Series Details Where Assembly Design Value Meets Or Exceeds Brace Reaction.
7. For Trade Specific Bracing Installation Notes, Refer To Page 7.1.
8. Utilize Any "G" Series Vertical Support Connection Having A Design Value Equal To Or Greater Than The Corresponding "Rod Total Vertical Load".

REVIEWED FOR CODE COMPLIANCE
HCAi
OPM-0403
BY: William Staehlin
DATE: 01-26-2024
CALIFORNIA BUILDING CODE 2022

REGISTERED PROFESSIONAL ENGINEER MARCIN WASAZNIK S-6612 STRUCTURAL STATE OF CALIFORNIA

ISAT
A Division of Tomarco Contractor Specialties
International Seismic Application Technology
14848 Northam Street, La Mirada, CA 90638
877-999-4728 (Tol Free) 714-523-0845 (Fax)
www.isatsb.com

Rev. 1
11/19/18
Page
C35 -0.25-30
2-Tier

4-WAY SPLAYED RIGID BRACING REQUIREMENTS [7]:

2-TIERED TRAPEZE MOUNTED ELECTRICAL SYSTEMS (Conduit, Cable Tray, Bus Duct, Bus Way) **MAXIMUM SEISMIC DESIGN FORCE = 0.25 G's**

Requires Use of ISAT Seismic Brackets. Use of Any Non-ISAT Bracket Voids Engineering. 2013 California Building Code Compliant

Combined 2-Tier Maximum Trapeze Load (lbs/lf)	Max. Vertical Support Spacing (ft.)	Rod [1, 8] Total Vertical Load (lbs)	Min. [8] Vertical Support Rod Dia. (in.)	4-WAY SPLAYED RIGID BRACING REQUIREMENTS				
				Max. [2] Brace Spacing (ft.)	Brace [3] Reaction P (lbs)	Min. Brace Assembly E - Pages	Min. Brace Anchorage [6] Form Pour [4] Deck Page D1	Min. Brace Anchorage [6] Metal [5] Deck Page D2
				4-Way Splayed Brace Pattern (B21.4)				
11.0	10	204	3/8	40	61	R38AAEM306	N1	L1
25.0	10	464	1/2	40	138	R12AAEM306	N2	L2
35.0	10	649	1/2	40	193	R12AAEM306	N2	L2
50.0	10	927	1/2	40	275	R12AAEM306	N3	L3
65.0	10	1,206	1/2	40	358	R12AAEM406	N4	L4
75.0	10	1,391	1/2	40	413	R12AAEM406	N5	L5
100.0	10	1,855	1/2	40	550	R12AAEM406	N6	L6
125.0	10	2,319	5/8	40	688	R58AAEM509	N7	L7
150.0	10	2,782	5/8	40	825	R58AAEM506	N9	L9
175.0	10	3,246	3/4	40	963	R34CFB1P06	N10	L10
200.0	10	3,710	3/4	40	1,100	R34CFB1P06	N12	L12
225.0	10	4,063	3/4	38	1,176	R34CFB1P06	N12	L12

1. TVL = DL + Fv + ($0.2S_{DS}$ x 0.70 x Wp). All Terms Are Working Loads. Based On Eccentric Loading, 65% Of Total Load Allocated Per Rod.
2. Reductions In Actual Installed Brace Spacing Will Result In An Equal Percentage Reduction In Brace Reaction. As An Option When This Occurs ISAT May Substitute An Alternate Anchorage From Tables D1 or D2 Which Meets or Exceeds The Lowered Brace Reaction.
3. At Max. 50 Degree Brace Inclination.
4. Min. 3,000 psi NWC. Any "N Series" Connection May Be Utilized Having A Numeric Designation Equal To Or Higher Than That Shown.
5. Min. 3,000 psi NWC or LWC. Any "L Series" Connection May Be Utilized Having A Numeric Designation Equal To Or Higher Than That Shown.
6. As An Alternate, Brace Anchorage Connections To Structure May Be Employed Using Any Detail From Structural Connections Section "D" Series Details Where Assembly Design Value Meets Or Exceeds Brace Reaction.
7. For Trade Specific Bracing Installation Notes, Refer To Page 7.1.
8. Utilize Any "G" Series Vertical Support Connection Having A Design Value Equal To Or Greater Than The Corresponding "Rod Total Vertical Load".

REVIEWED FOR CODE COMPLIANCE
HCAi
OPM-0403
BY: William Staehlin
DATE: 01-26-2024
CALIFORNIA BUILDING CODE 2022

REGISTERED PROFESSIONAL ENGINEER MARCIN WASAZNIK S-6612 STRUCTURAL STATE OF CALIFORNIA

ISAT
A Division of Tomarco Contractor Specialties
International Seismic Application Technology
14848 Northam Street, La Mirada, CA 90638
877-999-4728 (Tol Free) 714-523-0845 (Fax)
www.isatsb.com

Rev. 1
11/19/18
Page
C35 -0.25-45
2-Tier

4-WAY SPLAYED RIGID BRACING REQUIREMENTS [7]:

2-TIERED TRAPEZE MOUNTED ELECTRICAL SYSTEMS (Conduit, Cable Tray, Bus Duct, Bus Way) **MAXIMUM SEISMIC DESIGN FORCE = 0.25 G's**

Requires Use of ISAT Seismic Brackets. Use of Any Non-ISAT Bracket Voids Engineering. 2013 California Building Code Compliant

Combined 2-Tier Maximum Trapeze Load (lbs/lf)	Max. Vertical Support Spacing (ft.)	Rod [1, 8] Total Vertical Load (lbs)	Min. [8] Vertical Support Rod Dia. (in.)	4-WAY SPLAYED RIGID BRACING REQUIREMENTS				
				Max. [2] Brace Spacing (ft.)	Brace [3] Reaction P (lbs)	Min. Brace Assembly E - Pages	Min. Brace Anchorage [6] Form Pour [4] Deck Page D1	Min. Brace Anchorage [6] Metal [5] Deck Page D2
				4-Way Splayed Brace Pattern (B21.4)				
11.0	10	253	3/8	40	78	R38AAEM306	N1	L1
25.0	10	574	1/2	40	177	R12AAEM306	N2	L2
35.0	10	804	1/2	40	247	R12AAEM306	N3	L3
50.0	10	1,149	1/2	40	354	R12AAEM406	N4	L4
65.0	10	1,494	1/2	40	460	R12AAEM406	N5	L5
75.0	10	1,723	5/8	40	530	R58AAEM406	N6	L6
100.0	10	2,298	5/8	40	707	R58AAEM509	N8	L8
125.0	10	2,872	3/4	40	884	R34DGB1P09	N9	L9
150.0	10	3,340	3/4	38	1,008	R34DGB1P06	N11	L11
175.0	10	3,524	3/4	32	990	R34DGB1P06	N10	L10
200.0	10	3,744	3/4	28	990	R34DGB1P06	N10	L10
225.0	10	4,052	3/4	26	1,034	R34DGB1P06	N11	L11

1. TVL = DL + Fv + ($0.2S_{DS}$ x 0.70 x Wp). All Terms Are Working Loads. Based On Eccentric Loading, 65% Of Total Load Allocated Per Rod.
2. Reductions In Actual Installed Brace Spacing Will Result In An Equal Percentage Reduction In Brace Reaction. As An Option When This Occurs ISAT May Substitute An Alternate Anchorage From Tables D1 or D2 Which Meets or Exceeds The Lowered Brace Reaction.
3. At Max. 60 Degree Brace Inclination.
4. Min. 3,000 psi NWC. Any "N Series" Connection May Be Utilized Having A Numeric Designation Equal To Or Higher Than That Shown.
5. Min. 3,000 psi NWC or LWC. Any "L Series" Connection May Be Utilized Having A Numeric Designation Equal To Or Higher Than That Shown.
6. As An Alternate, Brace Anchorage Connections To Structure May Be Employed Using Any Detail From Structural Connections Section "D" Series Details Where Assembly Design Value Meets Or Exceeds Brace Reaction.
7. For Trade Specific Bracing Installation Notes, Refer To Page 7.1.
8. Utilize Any "G" Series Vertical Support Connection Having A Design Value Equal To Or Greater Than The Corresponding "Rod Total Vertical Load".

REVIEWED FOR CODE COMPLIANCE BY: OPM-0403 William Staehlin DATE: 01-26-2024 CALIFORNIA BUILDING CODE

REGISTERED PROFESSIONAL ENGINEER MARCIN WASAZNIK S-6612 STRUCTURAL STATE OF CALIFORNIA

ISAT
A Division of Tomarco Contractor Specialties
International Seismic Application Technology
14848 Northam Street, La Mirada, CA 90638
877-999-4728 (Tol Free) 714-523-0845 (Fax)
www.isateb.com

Rev. 1
11/19/18
Page
C35 -0.25-60
2-Tier

4-WAY SPLAYED RIGID BRACING REQUIREMENTS [7]:

2-TIERED TRAPEZE MOUNTED ELECTRICAL SYSTEMS (Conduit, Cable Tray, Bus Duct, Bus Way) **MAXIMUM SEISMIC DESIGN FORCE = 0.50 G's**

Requires Use of ISAT Seismic Brackets. Use of Any Non-ISAT Bracket Voids Engineering. 2013 California Building Code Compliant

Combined 2-Tier Maximum Trapeze Load (lbs/lf)	Max. Vertical Support Spacing (ft.)	Rod [1, 8] Total Vertical Load (lbs)	Min. [8] Vertical Support Rod Dia. (in.)	4-WAY SPLAYED RIGID BRACING REQUIREMENTS				
				Max. [2] Brace Spacing (ft.)	Brace [3] Reaction P (lbs)	Min. Brace Assembly E - Pages	Min. Brace Anchorage [6] Form Pour [4] Deck Page D1	Min. Brace Anchorage [6] Metal [5] Deck Page D2
				4-Way Splayed Brace Pattern (B21.4)				
11.0	10	201	3/8	40	90	R38AAEM306	N1	L1
25.0	10	456	1/2	40	204	R12AAEM306	N3	L3
35.0	10	639	1/2	40	286	R12AAEM306	N3	L3
50.0	10	912	1/2	40	408	R12AAEM406	N5	L5
65.0	10	1,186	1/2	40	531	R12AAEM406	N6	L6
75.0	10	1,368	1/2	40	612	R12AAEM406	N7	L7
100.0	10	1,824	1/2	40	816	R12AAEM506	N9	L9
125.0	10	2,281	5/8	40	1,021	R58AAEM506	N11	L11
150.0	10	2,737	5/8	40	1,225	R58AAEM506	N13	L13
175.0	10	3,027	5/8	36	1,286	R58AAEM506	N13	L13
200.0	10	3,270	5/8	32	1,306	R58AAEM506	N14	L14
225.0	10	3,466	5/8	28	1,286	R58AAEM506	N13	L13

1. TVL = DL + Fv + ($0.2S_{DS}$ x 0.70 x Wp). All Terms Are Working Loads. Based On Eccentric Loading, 65% Of Total Load Allocated Per Rod.
2. Reductions In Actual Installed Brace Spacing Will Result In An Equal Percentage Reduction In Brace Reaction. As An Option When This Occurs ISAT May Substitute An Alternate Anchorage From Tables D1 or D2 Which Meets or Exceeds The Lowered Brace Reaction.
3. At Max. 30 Degree Brace Inclination.
4. Min. 3,000 psi NWC. Any "N Series" Connection May Be Utilized Having A Numeric Designation Equal To Or Higher Than That Shown.
5. Min. 3,000 psi NWC or LWC. Any "L Series" Connection May Be Utilized Having A Numeric Designation Equal To Or Higher Than That Shown.
6. As An Alternate, Brace Anchorage Connections To Structure May Be Employed Using Any Detail From Structural Connections Section "D" Series Details Where Assembly Design Value Meets Or Exceeds Brace Reaction.
7. For Trade Specific Bracing Installation Notes, Refer To Page 7.1.
8. Utilize Any "G" Series Vertical Support Connection Having A Design Value Equal To Or Greater Than The Corresponding "Rod Total Vertical Load".

REVIEWED FOR CODE COMPLIANCE
HCAI
OPM-0403
By: William Staehlin
DATE: 01-26-2024
CALIFORNIA BUILDING CODE

REGISTERED PROFESSIONAL ENGINEER MARCIN WASAZNIK S-6612 STRUCTURAL STATE OF CALIFORNIA

ISAT
A Division of Tomarco Contractor Specialties
International Seismic Application Technology
14848 Northam Street, La Mirada, CA 90638
877-999-4728 (Tol Free) 714-523-0845 (Fax)
www.isateb.com

Rev. 1
11/19/18
Page
C35 -0.5-30
2-Tier

4-WAY SPLAYED RIGID BRACING REQUIREMENTS [7]:

2-TIERED TRAPEZE MOUNTED ELECTRICAL SYSTEMS (Conduit, Cable Tray, Bus Duct, Bus Way) **MAXIMUM SEISMIC DESIGN FORCE = 0.50 G's**

Requires Use of ISAT Seismic Brackets. Use of Any Non-ISAT Bracket Voids Engineering. 2013 California Building Code Compliant

Combined 2-Tier Maximum Trapeze Load (lbs/lf)	Max. Vertical Support Spacing (ft.)	Rod [1, 8] Total Vertical Load (lbs)	Min. [8] Vertical Support Rod Dia. (in.)	4-WAY SPLAYED RIGID BRACING REQUIREMENTS				
				Max. [2] Brace Spacing (ft.)	Brace [3] Reaction P (lbs)	Min. Brace Assembly E - Pages	Min. Brace Anchorage [6] Form Pour [4] Deck Page D1	Min. Brace Anchorage [6] Metal [5] Deck Page D2
				4-Way Splayed Brace Pattern (B21.4)				
11.0	10	312	3/8	40	121	R38AAEM306	N2	L2
25.0	10	708	1/2	40	275	R12AAEM306	N3	L3
35.0	10	991	1/2	40	385	R12AAEM406	N4	L4
50.0	10	1,416	1/2	40	550	R12AAEM406	N6	L6
65.0	10	1,841	5/8	40	715	R58AAEM509	N8	L8
75.0	10	2,124	3/4	40	825	R34CFB1P09	N9	L9
100.0	10	2,832	3/4	40	1,100	R34CFB1P06	N12	L12
125.0	10	3,051	3/4	32	1,100	R34CFB1P06	N12	L12
150.0	10	3,295	3/4	27	1,114	R34CFB1P06	N12	L12
175.0	10	3,502	3/4	23	1,107	R34CFB1P06	N12	L12
200.0	10	3,807	3/4	21	1,155	R34CFB1P06	N12	L12
225.0	10	4,063	3/4	19	1,176	R34CFB1P06	N12	L12

1. TVL = DL + Fv + ($0.2S_{DS}$ x 0.70 x Wp). All Terms Are Working Loads. Based On Eccentric Loading, 65% Of Total Load Allocated Per Rod.
2. Reductions In Actual Installed Brace Spacing Will Result In An Equal Percentage Reduction In Brace Reaction. As An Option When This Occurs ISAT May Substitute An Alternate Anchorage From Tables D1 or D2 Which Meets or Exceeds The Lowered Brace Reaction.
3. At Max. 50 Degree Brace Inclination.
4. Min. 3,000 psi NWC. Any "N Series" Connection May Be Utilized Having A Numeric Designation Equal To Or Higher Than That Shown.
5. Min. 3,000 psi NWC or LWC. Any "L Series" Connection May Be Utilized Having A Numeric Designation Equal To Or Higher Than That Shown.
6. As An Alternate, Brace Anchorage Connections To Structure May Be Employed Using Any Detail From Structural Connections Section "D" Series Details Where Assembly Design Value Meets Or Exceeds Brace Reaction.
7. For Trade Specific Bracing Installation Notes, Refer To Page 7.1.
8. Utilize Any "G" Series Vertical Support Connection Having A Design Value Equal To Or Greater Than The Corresponding "Rod Total Vertical Load".

REVIEWED FOR CODE COMPLIANCE
HCAi
OPM-0403
BY: William Staehlin
DATE: 01-26-2024
CALIFORNIA BUILDING CODE 2022

REGISTERED PROFESSIONAL ENGINEER MARCIN WASAZNIK S-6612 STRUCTURAL STATE OF CALIFORNIA

ISAT
A Division of Tomarco Contractor Specialties
International Seismic Application Technology
14848 Northam Street, La Mirada, CA 90638
877-999-4728 (Tol Free) 714-523-0845 (Fax)
www.isatsb.com

Rev. 1
11/19/18
Page
C35 -0.5-45
2-Tier

4-WAY SPLAYED RIGID BRACING REQUIREMENTS [7]:

2-TIERED TRAPEZE MOUNTED ELECTRICAL SYSTEMS (Conduit, Cable Tray, Bus Duct, Bus Way) **MAXIMUM SEISMIC DESIGN FORCE = 0.50 G's**

Requires Use of ISAT Seismic Brackets. Use of Any Non-ISAT Bracket Voids Engineering. 2013 California Building Code Compliant

Combined 2-Tier Maximum Trapeze Load (lbs/lf)	Max. Vertical Support Spacing (ft.)	Rod [1, 8] Total Vertical Load (lbs)	Min. [8] Vertical Support Rod Dia. (in.)	4-WAY SPLAYED RIGID BRACING REQUIREMENTS				
				Max. [2] Brace Spacing (ft.)	Brace [3] Reaction P (lbs)	Min. Brace Assembly E - Pages	Min. Brace Anchorage [6] Form Pour [4] Deck Page D1	Min. Brace Anchorage [6] Metal [5] Deck Page D2
				4-Way Splayed Brace Pattern (B21.4)				
11.0	10	409	3/8	40	156	R38AAEM306	N2	L2
25.0	10	930	1/2	40	354	R12AAEM406	N4	L4
35.0	10	1,301	1/2	40	495	R12AAEM406	N5	L5
50.0	10	1,859	5/8	40	707	R58AAEM509	N8	L8
65.0	10	2,417	3/4	40	919	R34DGB1P06	N10	L10
75.0	10	2,576	3/4	36	955	R34DGB1P06	N10	L10
100.0	10	2,724	3/4	26	919	R34DGB1P06	N10	L10
125.0	10	3,050	3/4	22	972	R34DGB1P06	N10	L10
150.0	10	3,234	3/4	18	955	R34DGB1P06	N10	L10
175.0	10	3,524	3/4	16	990	R34DGB1P06	N10	L10
200.0	10	3,744	3/4	14	990	R34DGB1P06	N10	L10
225.0	10	3,892	3/4	12	955	R34DGB1P06	N10	L10

1. TVL = DL + Fv + ($0.2S_{DS}$ x 0.70 x Wp). All Terms Are Working Loads. Based On Eccentric Loading, 65% Of Total Load Allocated Per Rod.
2. Reductions In Actual Installed Brace Spacing Will Result In An Equal Percentage Reduction In Brace Reaction. As An Option When This Occurs ISAT May Substitute An Alternate Anchorage From Tables D1 or D2 Which Meets or Exceeds The Lowered Brace Reaction.
3. At Max. 60 Degree Brace Inclination.
4. Min. 3,000 psi NWC. Any "N Series" Connection May Be Utilized Having A Numeric Designation Equal To Or Higher Than That Shown.
5. Min. 3,000 psi NWC or LWC. Any "L Series" Connection May Be Utilized Having A Numeric Designation Equal To Or Higher Than That Shown.
6. As An Alternate, Brace Anchorage Connections To Structure May Be Employed Using Any Detail From Structural Connections Section "D" Series Details Where Assembly Design Value Meets Or Exceeds Brace Reaction.
7. For Trade Specific Bracing Installation Notes, Refer To Page 7.1.
8. Utilize Any "G" Series Vertical Support Connection Having A Design Value Equal To Or Greater Than The Corresponding "Rod Total Vertical Load".

REVIEWED FOR CODE COMPLIANCE
HCAI
OPM-0403
By: William Staehlin
DATE: 01-26-2024
CALIFORNIA BUILDING CODE

REGISTERED PROFESSIONAL ENGINEER MARCIN WASAZNIK S-6612 STRUCTURAL STATE OF CALIFORNIA

ISAT
A Division of Tomarco Contractor Specialties
International Seismic Application Technology
14848 Northam Street, La Mirada, CA 90638
877-999-4728 (Tol Free) 714-523-0845 (Fax)
www.isateb.com

Rev. 1
11/19/18
Page
C35 -0.5-60
2-Tier

4-WAY SPLAYED RIGID BRACING REQUIREMENTS [7]:

2-TIERED TRAPEZE MOUNTED ELECTRICAL SYSTEMS (Conduit, Cable Tray, Bus Duct, Bus Way) **MAXIMUM SEISMIC DESIGN FORCE = 0.75 G's**

Requires Use of ISAT Seismic Brackets. Use of Any Non-ISAT Bracket Voids Engineering. 2013 California Building Code Compliant

Combined 2-Tier Maximum Trapeze Load (lbs/lf)	Max. Vertical Support Spacing (ft.)	Rod [1, 8] Total Vertical Load (lbs)	Min. [8] Vertical Support Rod Dia. (in.)	4-WAY SPLAYED RIGID BRACING REQUIREMENTS				
				Max. [2] Brace Spacing (ft.)	Brace [3] Reaction P (lbs)	Min. Brace Assembly E - Pages	Min. Brace Anchorage [6] Form Pour [4] Deck Page D1	Min. Brace Anchorage [6] Metal [5] Deck Page D2
				4-Way Splayed Brace Pattern (B21.4)				
11.0	10	253	3/8	40	135	R38AAEM306	N2	L2
25.0	10	574	1/2	40	306	R12AAEM409	N4	L4
35.0	10	804	1/2	40	429	R12AAEM406	N5	L5
50.0	10	1,149	1/2	40	612	R12AAEM406	N7	L7
65.0	10	1,494	1/2	40	796	R12AAEM506	N8	L8
75.0	10	1,723	5/8	40	919	R58AAEM506	N10	L10
100.0	10	2,298	5/8	40	1,225	R58AAEM506	N13	L13
125.0	10	2,517	5/8	32	1,225	R58AAEM506	N13	L13
150.0	10	2,808	5/8	28	1,286	R58AAEM506	N13	L13
175.0	10	3,027	5/8	24	1,286	R58AAEM506	N13	L13
200.0	10	3,175	5/8	20	1,225	R58AAEM506	N13	L13
225.0	10	3,413	5/8	18	1,240	R58AAEM506	N13	L13

1. TVL = DL + Fv + ($0.2S_{DS}$ x 0.70 x Wp). All Terms Are Working Loads. Based On Eccentric Loading, 65% Of Total Load Allocated Per Rod.
2. Reductions In Actual Installed Brace Spacing Will Result In An Equal Percentage Reduction In Brace Reaction. As An Option When This Occurs ISAT May Substitute An Alternate Anchorage From Tables D1 or D2 Which Meets or Exceeds The Lowered Brace Reaction.
3. At Max. 30 Degree Brace Inclination.
4. Min. 3,000 psi NWC. Any "N Series" Connection May Be Utilized Having A Numeric Designation Equal To Or Higher Than That Shown.
5. Min. 3,000 psi NWC or LWC. Any "L Series" Connection May Be Utilized Having A Numeric Designation Equal To Or Higher Than That Shown.
6. As An Alternate, Brace Anchorage Connections To Structure May Be Employed Using Any Detail From Structural Connections Section "D" Series Details Where Assembly Design Value Meets Or Exceeds Brace Reaction.
7. For Trade Specific Bracing Installation Notes, Refer To Page 7.1.
8. Utilize Any "G" Series Vertical Support Connection Having A Design Value Equal To Or Greater Than The Corresponding "Rod Total Vertical Load".

REVIEWED FOR CODE COMPLIANCE BY: OPM-0403 William Staehlin DATE: 01-26-2024 CALIFORNIA BUILDING CODE

REGISTERED PROFESSIONAL ENGINEER MARCIN WASAZNIK S-6612 STRUCTURAL STATE OF CALIFORNIA

ISAT
A Division of Tomarco Contractor Specialties
International Seismic Application Technology
14848 Northam Street, La Mirada, CA 90638
877-999-4728 (Tol Free) 714-523-0845 (Fax)
www.isateb.com

Rev. 1
11/19/18
Page
C35 -0.75-30
2-Tier

4-WAY SPLAYED RIGID BRACING REQUIREMENTS [7]:

2-TIERED TRAPEZE MOUNTED ELECTRICAL SYSTEMS (Conduit, Cable Tray, Bus Duct, Bus Way) **MAXIMUM SEISMIC DESIGN FORCE = 0.75 G's**

Requires Use of ISAT Seismic Brackets. Use of Any Non-ISAT Bracket Voids Engineering. 2013 California Building Code Compliant

Combined 2-Tier Maximum Trapeze Load (lbs/lf)	Max. Vertical Support Spacing (ft.)	Rod [1, 8] Total Vertical Load (lbs)	Min. [8] Vertical Support Rod Dia. (in.)	4-WAY SPLAYED RIGID BRACING REQUIREMENTS				
				Max. [2] Brace Spacing (ft.)	Brace [3] Reaction P (lbs)	Min. Brace Assembly E - Pages	Min. Brace Anchorage [6] Form Pour [4] Deck Page D1	Min. Brace Anchorage [6] Metal [5] Deck Page D2
				4-Way Splayed Brace Pattern (B21.4)				
11.0	10	419	3/8	40	182	R38AAEM306	N2	L2
25.0	10	952	1/2	40	413	R12AAEM406	N5	L5
35.0	10	1,333	5/8	40	578	R58AAEM406	N6	L6
50.0	10	1,905	3/4	40	825	R34CFB1P09	N9	L9
65.0	10	2,476	3/4	40	1,073	R34CFB1P06	N11	L11
75.0	10	2,582	3/4	35	1,083	R34CFB1P06	N11	L11
100.0	10	2,857	3/4	27	1,114	R34CFB1P06	N12	L12
125.0	10	3,021	3/4	21	1,083	R34CFB1P06	N11	L11
150.0	10	3,295	3/4	18	1,114	R34CFB1P06	N12	L12
175.0	10	3,460	3/4	15	1,083	R34CFB1P06	N11	L11
200.0	10	3,807	3/4	14	1,155	R34CFB1P06	N12	L12
225.0	10	3,953	3/4	12	1,114	R34CFB1P06	N12	L12

1. TVL = DL + Fv + ($0.2S_{DS}$ x 0.70 x Wp). All Terms Are Working Loads. Based On Eccentric Loading, 65% Of Total Load Allocated Per Rod.
2. Reductions In Actual Installed Brace Spacing Will Result In An Equal Percentage Reduction In Brace Reaction. As An Option When This Occurs ISAT May Substitute An Alternate Anchorage From Tables D1 or D2 Which Meets or Exceeds The Lowered Brace Reaction.
3. At Max. 50 Degree Brace Inclination.
4. Min. 3,000 psi NWC. Any "N Series" Connection May Be Utilized Having A Numeric Designation Equal To Or Higher Than That Shown.
5. Min. 3,000 psi NWC or LWC. Any "L Series" Connection May Be Utilized Having A Numeric Designation Equal To Or Higher Than That Shown.
6. As An Alternate, Brace Anchorage Connections To Structure May Be Employed Using Any Detail From Structural Connections Section "D" Series Details Where Assembly Design Value Meets Or Exceeds Brace Reaction.
7. For Trade Specific Bracing Installation Notes, Refer To Page 7.1.
8. Utilize Any "G" Series Vertical Support Connection Having A Design Value Equal To Or Greater Than The Corresponding "Rod Total Vertical Load".

REVIEWED FOR CODE COMPLIANCE
HCAi
OPM-0403
BY: William Staehlin
DATE: 01-26-2024
CALIFORNIA BUILDING CODE 2022

REGISTERED PROFESSIONAL ENGINEER MARCIN WASAZNIK S-6612 STRUCTURAL STATE OF CALIFORNIA

ISAT
A Division of Tomarco Contractor Specialties
International Seismic Application Technology
14848 Northam Street, La Mirada, CA 90638
877-999-4728 (Tol Free) 714-523-0845 (Fax)
www.isatsb.com

Rev. 1
11/19/18
Page
C35 -0.75-45
2-Tier

4-WAY SPLAYED RIGID BRACING REQUIREMENTS [7]:

2-TIERED TRAPEZE MOUNTED ELECTRICAL SYSTEMS (Conduit, Cable Tray, Bus Duct, Bus Way) **MAXIMUM SEISMIC DESIGN FORCE = 0.75 G's**

Requires Use of ISAT Seismic Brackets. Use of Any Non-ISAT Bracket Voids Engineering. 2013 California Building Code Compliant

Combined 2-Tier Maximum Trapeze Load (lbs/lf)	Max. Vertical Support Spacing (ft.)	Rod [1, 8] Total Vertical Load (lbs)	Min. [8] Vertical Support Rod Dia. (in.)	4-WAY SPLAYED RIGID BRACING REQUIREMENTS				
				Max. [2] Brace Spacing (ft.)	Brace [3] Reaction P (lbs)	Min. Brace Assembly E - Pages	Min. Brace Anchorage [6] Form Pour [4] Deck Page D1	Min. Brace Anchorage [6] Metal [5] Deck Page D2
				4-Way Splayed Brace Pattern (B21.4)				
11.0	10	565	1/2	40	233	R12AAEM306	N3	L3
25.0	10	1,285	5/8	40	530	R58AAEM406	N6	L6
35.0	10	1,799	3/4	40	742	R34CFB1P09	N8	L8
50.0	10	2,356	3/4	36	955	R34DGB1P06	N10	L10
65.0	10	2,509	3/4	28	965	R34DGB1P06	N10	L10
75.0	10	2,576	3/4	24	955	R34DGB1P06	N10	L10
100.0	10	2,795	3/4	18	955	R34DGB1P06	N10	L10
125.0	10	2,961	3/4	14	928	R34DGB1P06	N10	L10
150.0	10	3,234	3/4	12	955	R34DGB1P06	N10	L10
175.0	10	3,400	3/4	10	928	R34DGB1P06	N10	L10

1. TVL = DL + Fv + ($0.2S_{DS}$ x 0.70 x Wp). All Terms Are Working Loads. Based On Eccentric Loading, 65% Of Total Load Allocated Per Rod.
2. Reductions In Actual Installed Brace Spacing Will Result In An Equal Percentage Reduction In Brace Reaction. As An Option When This Occurs ISAT May Substitute An Alternate Anchorage From Tables D1 or D2 Which Meets or Exceeds The Lowered Brace Reaction.
3. At Max. 60 Degree Brace Inclination.
4. Min. 3,000 psi NWC. Any "N Series" Connection May Be Utilized Having A Numeric Designation Equal To Or Higher Than That Shown.
5. Min. 3,000 psi NWC or LWC. Any "L Series" Connection May Be Utilized Having A Numeric Designation Equal To Or Higher Than That Shown.
6. As An Alternate, Brace Anchorage Connections To Structure May Be Employed Using Any Detail From Structural Connections Section "D" Series Details Where Assembly Design Value Meets Or Exceeds Brace Reaction.
7. For Trade Specific Bracing Installation Notes, Refer To Page 7.1.
8. Utilize Any "G" Series Vertical Support Connection Having A Design Value Equal To Or Greater Than The Corresponding "Rod Total Vertical Load".

REVIEWED FOR CODE COMPLIANCE
ICC-ES
OPM-0403
BY: William Staehlin
DATE: 01-26-2024
CALIFORNIA BUILDING CODE

REGISTERED PROFESSIONAL ENGINEER MARCIN WASAZNIK S-6612 STRUCTURAL STATE OF CALIFORNIA

ISAT
A Division of Tomarco Contractor Specialties
International Seismic Application Technology
14848 Northam Street, La Mirada, CA 90638
877-999-4728 (Tol Free) 714-523-0845 (Fax)
www.isatsb.com

Rev. 1
11/19/18
Page
C35 -0.75-60
2-Tier

4-WAY SPLAYED RIGID BRACING REQUIREMENTS [7]:

2-TIERED TRAPEZE MOUNTED ELECTRICAL SYSTEMS (Conduit, Cable Tray, Bus Duct, Bus Way) **MAXIMUM SEISMIC DESIGN FORCE = 1.00 G's**

Requires Use of ISAT Seismic Brackets. Use of Any Non-ISAT Bracket Voids Engineering. 2013 California Building Code Compliant

Combined 2-Tier Maximum Trapeze Load (lbs/lf)	Max. Vertical Support Spacing (ft.)	Rod [1, 8] Total Vertical Load (lbs)	Min. [8] Vertical Support Rod Dia. (in.)	4-WAY SPLAYED RIGID BRACING REQUIREMENTS				
				Max. [2] Brace Spacing (ft.)	Brace [3] Reaction P (lbs)	Min. Brace Assembly E - Pages	Min. Brace Anchorage [6] Form Pour [4] Deck Page D1	Min. Brace Anchorage [6] Metal [5] Deck Page D2
				4-Way Splayed Brace Pattern (B21.4)				
11.0	10	305	3/8	40	180	R38AAEM306	N2	L2
25.0	10	693	1/2	40	408	R12AAEM406	N5	L5
35.0	10	970	1/2	40	572	R12AAEM406	N6	L6
50.0	10	1,386	1/2	40	816	R12AAEM506	N9	L9
65.0	10	1,801	5/8	40	1,061	R58AAEM506	N11	L11
75.0	10	2,079	5/8	40	1,225	R58AAEM506	N13	L13
100.0	10	2,298	5/8	30	1,225	R58AAEM506	N13	L13
125.0	10	2,517	5/8	24	1,225	R58AAEM506	N13	L13
150.0	10	2,737	5/8	20	1,225	R58AAEM506	N13	L13
175.0	10	3,027	5/8	18	1,286	R58AAEM506	N13	L13
200.0	10	3,270	5/8	16	1,306	R58AAEM506	N14	L14
225.0	10	3,466	5/8	14	1,286	R58AAEM506	N13	L13

1. TVL = DL + Fv + ($0.2S_{DS}$ x 0.70 x Wp). All Terms Are Working Loads. Based On Eccentric Loading, 65% Of Total Load Allocated Per Rod.
2. Reductions In Actual Installed Brace Spacing Will Result In An Equal Percentage Reduction In Brace Reaction. As An Option When This Occurs ISAT May Substitute An Alternate Anchorage From Tables D1 or D2 Which Meets or Exceeds The Lowered Brace Reaction.
3. At Max. 30 Degree Brace Inclination.
4. Min. 3,000 psi NWC. Any "N Series" Connection May Be Utilized Having A Numeric Designation Equal To Or Higher Than That Shown.
5. Min. 3,000 psi NWC or LWC. Any "L Series" Connection May Be Utilized Having A Numeric Designation Equal To Or Higher Than That Shown.
6. As An Alternate, Brace Anchorage Connections To Structure May Be Employed Using Any Detail From Structural Connections Section "D" Series Details Where Assembly Design Value Meets Or Exceeds Brace Reaction.
7. For Trade Specific Bracing Installation Notes, Refer To Page 7.1.
8. Utilize Any "G" Series Vertical Support Connection Having A Design Value Equal To Or Greater Than The Corresponding "Rod Total Vertical Load".

REVIEWED FOR CODE COMPLIANCE
HCAi
OPM-0403
BY: William Staehlin
DATE: 01-26-2024
CALIFORNIA BUILDING CODE 2022

REGISTERED PROFESSIONAL ENGINEER MARCIN WASAZNIK S 6612 STRUCTURAL STATE OF CALIFORNIA

ISAT
A Division of Tomarco Contractor Specialties
International Seismic Application Technology
14848 Northam Street, La Mirada, CA 90638
877-999-4728 (Tol Free) 714-523-0845 (Fax)
www.isatsb.com

Rev. 1
11/19/18
Page
C35 -1-30
2-Tier

4-WAY SPLAYED RIGID BRACING REQUIREMENTS [7]:

2-TIERED TRAPEZE MOUNTED ELECTRICAL SYSTEMS (Conduit, Cable Tray, Bus Duct, Bus Way) **MAXIMUM SEISMIC DESIGN FORCE = 1.00 G's**

Requires Use of ISAT Seismic Brackets. Use of Any Non-ISAT Bracket Voids Engineering. 2013 California Building Code Compliant

Combined 2-Tier Maximum Trapeze Load (lbs/lf)	Max. Vertical Support Spacing (ft.)	Rod [1, 8] Total Vertical Load (lbs)	Min. [8] Vertical Support Rod Dia. (in.)	4-WAY SPLAYED RIGID BRACING REQUIREMENTS				
				Max. [2] Brace Spacing (ft.)	Brace [3] Reaction P (lbs)	Min. Brace Assembly E - Pages	Min. Brace Anchorage [6] Form Pour [4] Deck Page D1	Min. Brace Anchorage [6] Metal [5] Deck Page D2
				4-Way Splayed Brace Pattern (B21.4)				
11.0	10	527	1/2	40	242	R12AAEM306	N3	L3
25.0	10	1,197	1/2	40	550	R12AAEM406	N6	L6
35.0	10	1,675	5/8	40	770	R58AAEM509	N8	L8
50.0	10	2,345	3/4	39	1,073	R34CFB1P06	N11	L11
65.0	10	2,476	3/4	30	1,073	R34CFB1P06	N11	L11
75.0	10	2,564	3/4	26	1,073	R34CFB1P06	N11	L11
100.0	10	2,832	3/4	20	1,100	R34CFB1P06	N12	L12
125.0	10	3,051	3/4	16	1,100	R34CFB1P06	N12	L12
150.0	10	3,222	3/4	13	1,073	R34CFB1P06	N11	L11
175.0	10	3,417	3/4	11	1,059	R34CFB1P06	N11	L11
200.0	10	3,710	3/4	10	1,100	R34CFB1P06	N12	L12

1. TVL = DL + Fv + ($0.2S_{DS}$ x 0.70 x Wp). All Terms Are Working Loads. Based On Eccentric Loading, 65% Of Total Load Allocated Per Rod.
2. Reductions In Actual Installed Brace Spacing Will Result In An Equal Percentage Reduction In Brace Reaction. As An Option When This Occurs ISAT May Substitute An Alternate Anchorage From Tables D1 or D2 Which Meets or Exceeds The Lowered Brace Reaction.
3. At Max. 50 Degree Brace Inclination.
4. Min. 3,000 psi NWC. Any "N Series" Connection May Be Utilized Having A Numeric Designation Equal To Or Higher Than That Shown.
5. Min. 3,000 psi NWC or LWC. Any "L Series" Connection May Be Utilized Having A Numeric Designation Equal To Or Higher Than That Shown.
6. As An Alternate, Brace Anchorage Connections To Structure May Be Employed Using Any Detail From Structural Connections Section "D" Series Details Where Assembly Design Value Meets Or Exceeds Brace Reaction.
7. For Trade Specific Bracing Installation Notes, Refer To Page 7.1.
8. Utilize Any "G" Series Vertical Support Connection Having A Design Value Equal To Or Greater Than The Corresponding "Rod Total Vertical Load".

REVIEWED FOR CODE COMPLIANCE
HCAI
OPM-0403
By: William Staehlin
DATE: 01-26-2024
CALIFORNIA BUILDING CODES

REGISTERED PROFESSIONAL ENGINEER MARCIN WASAZNIK S-6612 STRUCTURAL STATE OF CALIFORNIA

ISAT
A Division of Tomarco Contractor Specialties

International Seismic Application Technology
14848 Northam Street, La Mirada, CA 90638
877-999-4728 (Tol Free) 714-523-0845 (Fax)
www.isatsb.com

Rev. 1
11/19/18
Page
C35 -1-45
2-Tier

4-WAY SPLAYED RIGID BRACING REQUIREMENTS [7]:

2-TIERED TRAPEZE MOUNTED ELECTRICAL SYSTEMS (Conduit, Cable Tray, Bus Duct, Bus Way) ***MAXIMUM SEISMIC DESIGN FORCE = 1.00 G's***

Requires Use of ISAT Seismic Brackets. *Use of Any Non-ISAT Bracket Voids Engineering.* *2013 California Building Code Compliant*

Combined 2-Tier Maximum Trapeze Load (lbs/lf)	Max. Vertical Support Spacing (ft.)	Rod [1, 8] Total Vertical Load (lbs)	Min. [8] Vertical Support Rod Dia. (in.)	4-WAY SPLAYED RIGID BRACING REQUIREMENTS				
				Max. [2] Brace Spacing (ft.)	Brace [3] Reaction P (lbs)	Min. Brace Assembly E - Pages	Min. Brace Anchorage [6] Form Pour [4] Deck Page D1	Min. Brace Anchorage [6] Metal [5] Deck Page D2
				4-Way Splayed Brace Pattern (B21.4)				
11.0	10	721	1/2	40	311	R12AAEM409	N4	L4
25.0	10	1,640	3/4	40	707	R34CFB1P09	N8	L8
35.0	10	2,196	3/4	38	940	R34DGB1P06	N10	L10
50.0	10	2,285	3/4	26	919	R34DGB1P06	N10	L10
65.0	10	2,417	3/4	20	919	R34DGB1P06	N10	L10
75.0	10	2,576	3/4	18	955	R34DGB1P06	N10	L10
100.0	10	2,582	3/4	12	849	R34CFB1P09	N9	L9
125.0	10	2,872	3/4	10	884	R34DGB1P09	N9	L9

1. TVL = DL + Fv + ($0.2S_{DS}$ x 0.70 x Wp). All Terms Are Working Loads. Based On Eccentric Loading, 65% Of Total Load Allocated Per Rod.
2. Reductions In Actual Installed Brace Spacing Will Result In An Equal Percentage Reduction In Brace Reaction. As An Option When This Occurs ISAT May Substitute An Alternate Anchorage From Tables D1 or D2 Which Meets or Exceeds The Lowered Brace Reaction.
3. At Max. 60 Degree Brace Inclination.
4. Min. 3,000 psi NWC. Any "N Series" Connection May Be Utilized Having A Numeric Designation Equal To Or Higher Than That Shown.
5. Min. 3,000 psi NWC or LWC. Any "L Series" Connection May Be Utilized Having A Numeric Designation Equal To Or Higher Than That Shown.
6. As An Alternate, Brace Anchorage Connections To Structure May Be Employed Using Any Detail From Structural Connections Section "D" Series Details Where Assembly Design Value Meets Or Exceeds Brace Reaction.
7. For Trade Specific Bracing Installation Notes, Refer To Page 7.1.
8. Utilize Any "G" Series Vertical Support Connection Having A Design Value Equal To Or Greater Than The Corresponding "Rod Total Vertical Load".

REVIEWED FOR CODE COMPLIANCE
HCAI
OPM-0403
BY: William Staehlin
DATE: 01-26-2024
CALIFORNIA BUILDING CODE, 2019

REGISTERED PROFESSIONAL ENGINEER MARCIN WASAZNIK S-6612 STRUCTURAL STATE OF CALIFORNIA

ISAT
A Division of Tomarco Contractor Specialties
international Seismic Application Technology
14848 Northam Street, La Mirada, CA 90638
877-000-4728 (Tol Free) 714-523-0845 (Fax)
www.isatsb.com

Rev. 1
11/19/18
Page
C35 -1-60
2-Tier

4-WAY SPLAYED CABLE BRACING REQUIREMENTS [7]:

TRAPEZE MOUNTED ELECTRICAL SYSTEMS (Conduit, Cable Tray, Bus Duct, Bus Way) — **MAXIMUM SEISMIC DESIGN FORCE = 0.25 G's**

Requires Use of ISAT Seismic Brackets. Use of Any Non-ISAT Bracket Voids Engineering. 2013 California Building Code Compliant

Maximum Trapeze Load (lbs/lf)	Max. Vertical Support Spacing (ft.)	Rod [1, 8] Total Vertical Load (lbs)	Min. [8] Vertical Support Rod Dia. (in.)	4-WAY SPLAYED CABLE BRACING REQUIREMENTS				
				Max. [2] Brace Spacing (ft.)	Brace [3] Reaction P (lbs)	Min. Brace Assembly E - Pages	Min. Brace Anchorage [6] Form Pour [4] Deck Page D1	Min. Brace Anchorage [6] Metal [5] Deck Page D2
				4-Way Splayed Brace Pattern (B24.2, B43.2, B46.2)				
11.0	10	97	3/8	40	180	C38AA04WS	N2	L2
25.0	10	219	1/2	40	408	C12AA04WS	N5	L5
35.0	10	307	1/2	40	572	C12AA04WS	N6	L6
50.0	10	439	1/2	40	816	C12AA06WS	N9	L9
65.0	10	570	1/2	40	1,061	C12AA06WS	N11	L11
75.0	10	658	1/2	40	1,225	C12AA06WS	N13	L13
100.0	10	878	1/2	35	1,429	C12AA06WS	N15	L15
125.0	10	1,097	1/2	28	1,429	C12AA06WS	N15	L15
150.0	10	1,316	1/2	23	1,408	C12AA06WS	N15	L15
175.0	10	1,536	1/2	20	1,429	C12AA06WS	N15	L15
200.0	10	1,755	1/2	17	1,388	C12AA06WS	N14	L14
225.0	10	1,974	1/2	15	1,378	C12AA06WS	N14	L14

1. TVL = DL + Fv + ($0.2S_{DS}$ x 0.70 x Wp). All Terms Are Working Loads. Based On Eccentric Loading, 65% Of Total Load Allocated Per Rod.
2. Reductions In Actual Installed Brace Spacing Will Result In An Equal Percentage Reduction In Brace Reaction. As An Option When This Occurs ISAT May Substitute An Alternate Anchorage From Tables D1 or D2 Which Meets or Exceeds The Lowered Brace Reaction.
3. At Max. 30 Degree Brace Inclination.
4. Min. 3,000 psi NWC. Any "N Series" Connection May Be Utilized Having A Numeric Designation Equal To Or Higher Than That Shown.
5. Min. 3,000 psi NWC or LWC. Any "L Series" Connection May Be Utilized Having A Numeric Designation Equal To Or Higher Than That Shown.
6. As An Alternate, Brace Anchorage Connections To Structure May Be Employed Using Any Detail From Structural Connections Section "D" Series Details Where Assembly Design Value Meets Or Exceeds Brace Reaction.
7. For Trade Specific Bracing Installation Notes, Refer To Page 7.1.
8. Utilize Any "G" Series Vertical Support Connection Having A Design Value Equal To Or Greater Than The Corresponding "Rod Total Vertical Load".

REVIEWED FOR CODE COMPLIANCE
HCAI
OPM-0403
BY: William Staehlin
DATE: 01-26-2024
CALIFORNIA BUILDING CODES

REGISTERED PROFESSIONAL ENGINEER MARCIN WASAZNIK S-6612 STRUCTURAL STATE OF CALIFORNIA

ISAT
A Division of Tomarco Contractor Specialties
International Seismic Application Technology
14848 Northam Street, La Mirada, CA 90638
877-999-4728 (Toll Free) 714-523-0845 (Fax)
www.isatsb.com

Rev. 1
11/19/18
Page
C36-0.25-30

4-WAY SPLAYED CABLE BRACING REQUIREMENTS [7]:

TRAPEZE MOUNTED ELECTRICAL SYSTEMS (Conduit, Cable Tray, Bus Duct, Bus Way) **MAXIMUM SEISMIC DESIGN FORCE = 0.25 G's**

Requires Use of ISAT Seismic Brackets. Use of Any Non-ISAT Bracket Voids Engineering. 2013 California Building Code Compliant

Maximum Trapeze Load (lbs/lf)	Max. Vertical Support Spacing (ft.)	Rod [1, 8] Total Vertical Load (lbs)	Min. [8] Vertical Support Rod Dia. (in.)	4-WAY SPLAYED CABLE BRACING REQUIREMENTS: Max. [2] Brace Spacing (ft.)	Brace [3] Reaction P (lbs)	Min. Brace Assembly E - Pages	Min. Brace Anchorage [6]: Form Pour [4] Deck Page D1	Metal [5] Deck Page D2
				4-Way Splayed Brace Pattern (B24.2, B43.2, B46.2)				
11.0	10	97	3/8	40	242	C38AA04WS	N3	L3
25.0	10	219	1/2	40	550	C12AA04WS	N6	L6
35.0	10	307	1/2	40	770	C12AA06WS	N8	L8
50.0	10	439	1/2	40	1,100	C12AA06WS	N12	L12
65.0	10	570	5/8	40	1,430	C58AA06WS	N15	L15
75.0	10	658	5/8	40	1,650	C58DG06TS	N17	L17
100.0	10	878	5/8	32	1,760	C58DG06TS	N18	L18
125.0	10	1,097	5/8	26	1,788	C58DG06TS	N18	L18
150.0	10	1,316	5/8	22	1,815	C58DG06TS	N19	L19
175.0	10	1,536	5/8	18	1,733	C58DG06TS	N18	L18
200.0	10	1,755	5/8	16	1,760	C58DG06TS	N18	L18
225.0	10	1,974	5/8	14	1,733	C58DG06TS	N18	L18

1. TVL = DL + Fv + ($0.2S_{DS}$ x 0.70 x Wp). All Terms Are Working Loads. Based On Eccentric Loading, 65% Of Total Load Allocated Per Rod.
2. Reductions In Actual Installed Brace Spacing Will Result In An Equal Percentage Reduction In Brace Reaction. As An Option When This Occurs ISAT May Substitute An Alternate Anchorage From Tables D1 or D2 Which Meets or Exceeds The Lowered Brace Reaction.
3. At Max. 50 Degree Brace Inclination.
4. Min. 3,000 psi NWC. Any "N Series" Connection May Be Utilized Having A Numeric Designation Equal To Or Higher Than That Shown.
5. Min. 3,000 psi NWC or LWC. Any "L Series" Connection May Be Utilized Having A Numeric Designation Equal To Or Higher Than That Shown.
6. As An Alternate, Brace Anchorage Connections To Structure May Be Employed Using Any Detail From Structural Connections Section "D" Series Details Where Assembly Design Value Meets Or Exceeds Brace Reaction.
7. For Trade Specific Bracing Installation Notes, Refer To Page 7.1.
8. Utilize Any "G" Series Vertical Support Connection Having A Design Value Equal To Or Greater Than The Corresponding "Rod Total Vertical Load".

REVIEWED FOR CODE COMPLIANCE
HCAI
OPM-0403
BY: William Staehlin
DATE: 01-26-2024
CALIFORNIA BUILDING CODE 2022

REGISTERED PROFESSIONAL ENGINEER
MARCIN WASAZNIK
S 6612
STRUCTURAL
STATE OF CALIFORNIA

ISAT
A Division of Tomarco Contractor Specialties
International Seismic Application Technology
14848 Northam Street, La Mirada, CA 90638
877-999-4728 (Toll Free) 714-523-0845 (Fax)
www.isatsb.com

Rev. 1
11/19/18
Page
C36-0.25-45

4-WAY SPLAYED CABLE BRACING REQUIREMENTS [7]:

TRAPEZE MOUNTED ELECTRICAL SYSTEMS (Conduit, Cable Tray, Bus Duct, Bus Way) ***MAXIMUM SEISMIC DESIGN FORCE = 0.25 G's***

Requires Use of ISAT Seismic Brackets. *Use of Any Non-ISAT Bracket Voids Engineering.* *2013 California Building Code Compliant*

Maximum Trapeze Load (lbs/lf)	Max. Vertical Support Spacing (ft.)	Rod [1, 8] Total Vertical Load (lbs)	Min. [8] Vertical Support Rod Dia. (in.)	4-WAY SPLAYED CABLE BRACING REQUIREMENTS				
				Max. [2] Brace Spacing (ft.)	Brace [3] Reaction P (lbs)	Min. Brace Assembly E - Pages	Min. Brace Anchorage [6] Form Pour [4] Deck Page D1	Min. Brace Anchorage [6] Metal [5] Deck Page D2
				4-Way Splayed Brace Pattern (B24.2, B43.2, B46.2)				
11.0	10	97	3/8	40	311	C38AA04WS	N4	L4
25.0	10	219	1/2	40	707	C12AA06WS	N8	L8
35.0	10	307	1/2	40	990	C12AA06WS	N10	L10
50.0	10	439	5/8	40	1,414	C58AA06WS	N15	L15
65.0	10	570	5/8	32	1,471	C58AA06WS	N15	L15
75.0	10	658	5/8	27	1,432	C58AA06WS	N15	L15
100.0	10	878	5/8	20	1,414	C58AA06WS	N15	L15
125.0	10	1,097	5/8	16	1,414	C58AA06WS	N15	L15
150.0	10	1,316	5/8	13	1,379	C58AA06WS	N14	L14
175.0	10	1,536	5/8	11	1,361	C58AA06WS	N14	L14
200.0	10	1,755	5/8	10	1,414	C58AA06WS	N15	L15

1. TVL = DL + Fv + ($0.2S_{DS}$ x 0.70 x Wp). All Terms Are Working Loads. Based On Eccentric Loading, 65% Of Total Load Allocated Per Rod.
2. Reductions In Actual Installed Brace Spacing Will Result In An Equal Percentage Reduction In Brace Reaction. As An Option When This Occurs ISAT May Substitute An Alternate Anchorage From Tables D1 or D2 Which Meets or Exceeds The Lowered Brace Reaction.
3. At Max. 60 Degree Brace Inclination.
4. Min. 3,000 psi NWC. Any "N Series" Connection May Be Utilized Having A Numeric Designation Equal To Or Higher Than That Shown.
5. Min. 3,000 psi NWC or LWC. Any "L Series" Connection May Be Utilized Having A Numeric Designation Equal To Or Higher Than That Shown.
6. As An Alternate, Brace Anchorage Connections To Structure May Be Employed Using Any Detail From Structural Connections Section "D" Series Details Where Assembly Design Value Meets Or Exceeds Brace Reaction.
7. For Trade Specific Bracing Installation Notes, Refer To Page 7.1.
8. Utilize Any "G" Series Vertical Support Connection Having A Design Value Equal To Or Greater Than The Corresponding "Rod Total Vertical Load".

REVIEWED FOR CODE COMPLIANCE BY: William Staehlin DATE: 01-26-2024 OPM-0403 CALIFORNIA BUILDING CODE

REGISTERED PROFESSIONAL ENGINEER MARCIN WASAZNIK S 6612 STRUCTURAL STATE OF CALIFORNIA

ISAT
A Division of Tomarco Contractor Specialties
International Seismic Application Technology
14848 Northam Street, La Mirada, CA 90638
877-999-4728 (Toll Free) 714-523-0845 (Fax)
www.isatsb.com

Rev. 1
11/19/18
Page
C36-0.25-60

4-WAY SPLAYED CABLE BRACING REQUIREMENTS [7]:

TRAPEZE MOUNTED ELECTRICAL SYSTEMS (Conduit, Cable Tray, Bus Duct, Bus Way) ***MAXIMUM SEISMIC DESIGN FORCE = 0.50 G's***

Requires Use of ISAT Seismic Brackets. Use of Any Non-ISAT Bracket Voids Engineering. 2013 California Building Code Compliant

Maximum Trapeze Load (lbs/lf)	Max. Vertical Support Spacing (ft.)	Rod [1, 8] Total Vertical Load (lbs)	Min. [8] Vertical Support Rod Dia. (in.)	4-WAY SPLAYED CABLE BRACING REQUIREMENTS				
				Max. [2] Brace Spacing (ft.)	Brace [3] Reaction P (lbs)	Min. Brace Assembly E - Pages	Min. Brace Anchorage [6] Form Pour [4] Deck Page D1	Min. Brace Anchorage [6] Metal [5] Deck Page D2
				4-Way Splayed Brace Pattern (B24.2, B43.2, B46.2)				
11.0	10	97	3/8	40	359	C38AA04WS	N4	L4
25.0	10	219	1/2	40	816	C12AA06WS	N9	L9
35.0	10	307	1/2	40	1,143	C12AA06WS	N12	L12
50.0	10	439	1/2	34	1,388	C12AA06WS	N14	L14
65.0	10	570	1/2	26	1,380	C12AA06WS	N14	L14
75.0	10	658	1/2	22	1,347	C12AA06WS	N14	L14
100.0	10	878	1/2	16	1,306	C12AA06WS	N14	L14
125.0	10	1,097	1/2	14	1,429	C12AA06WS	N15	L15
150.0	10	1,316	1/2	10	1,225	C12AA06WS	N13	L13
175.0	10	1,536	1/2	10	1,429	C12AA06WS	N15	L15

1. TVL = DL + Fv + ($0.2S_{DS}$ x 0.70 x Wp). All Terms Are Working Loads. Based On Eccentric Loading, 65% Of Total Load Allocated Per Rod.
2. Reductions In Actual Installed Brace Spacing Will Result In An Equal Percentage Reduction In Brace Reaction. As An Option When This Occurs ISAT May Substitute An Alternate Anchorage From Tables D1 or D2 Which Meets or Exceeds The Lowered Brace Reaction.
3. At Max. 30 Degree Brace Inclination.
4. Min. 3,000 psi NWC. Any "N Series" Connection May Be Utilized Having A Numeric Designation Equal To Or Higher Than That Shown.
5. Min. 3,000 psi NWC or LWC. Any "L Series" Connection May Be Utilized Having A Numeric Designation Equal To Or Higher Than That Shown.
6. As An Alternate, Brace Anchorage Connections To Structure May Be Employed Using Any Detail From Structural Connections Section "D" Series Details Where Assembly Design Value Meets Or Exceeds Brace Reaction.
7. For Trade Specific Bracing Installation Notes, Refer To Page 7.1.
8. Utilize Any "G" Series Vertical Support Connection Having A Design Value Equal To Or Greater Than The Corresponding "Rod Total Vertical Load".

REVIEWED FOR CODE COMPLIANCE
HCAI
OPM-0403
BY: William Staehlin
DATE: 01-26-2024
CALIFORNIA BUILDING CODES

REGISTERED PROFESSIONAL ENGINEER
MARCIN WASAZNIK
S-6612
STRUCTURAL
STATE OF CALIFORNIA

ISAT
A Division of Tomarco Contractor Specialties

International Seismic Application Technology
14848 Northam Street, La Mirada, CA 90638
877-999-4728 (Toll Free) 714-523-0845 (Fax)
www.isatsb.com

Rev. 1
11/19/18
Page
C36-0.5-30

4-WAY SPLAYED CABLE BRACING REQUIREMENTS [7]:

TRAPEZE MOUNTED ELECTRICAL SYSTEMS (Conduit, Cable Tray, Bus Duct, Bus Way) ***MAXIMUM SEISMIC DESIGN FORCE = 0.50 G's***

Requires Use of ISAT Seismic Brackets. *Use of Any Non-ISAT Bracket Voids Engineering.* *2013 California Building Code Compliant*

Maximum Trapeze Load (lbs/lf)	Max. Vertical Support Spacing (ft.)	Rod [1, 8] Total Vertical Load (lbs)	Min. [8] Vertical Support Rod Dia. (in.)	4-WAY SPLAYED CABLE BRACING REQUIREMENTS				
				Max. [2] Brace Spacing (ft.)	Brace [3] Reaction P (lbs)	Min. Brace Assembly E - Pages	Min. Brace Anchorage [6] Form Pour [4] Deck Page D1	Min. Brace Anchorage [6] Metal [5] Deck Page D2
				4-Way Splayed Brace Pattern (B24.2, B43.2, B46.2)				
11.0	10	97	3/8	40	484	C38AA04WS	N5	L5
25.0	10	219	1/2	40	1,100	C12AA06WS	N12	L12
35.0	10	307	5/8	40	1,540	C58DG06TS	N16	L16
50.0	10	439	5/8	32	1,760	C58DG06TS	N18	L18
65.0	10	570	5/8	24	1,716	C58DG06TS	N18	L18
75.0	10	658	5/8	22	1,815	C58DG06TS	N19	L19
100.0	10	878	5/8	16	1,760	C58DG06TS	N18	L18
125.0	10	1,097	5/8	12	1,650	C58DG06TS	N17	L17
150.0	10	1,316	5/8	10	1,650	C58DG06TS	N17	L17

1. TVL = DL + Fv + ($0.2S_{DS}$ x 0.70 x Wp). All Terms Are Working Loads. Based On Eccentric Loading, 65% Of Total Load Allocated Per Rod.
2. Reductions In Actual Installed Brace Spacing Will Result In An Equal Percentage Reduction In Brace Reaction. As An Option When This Occurs ISAT May Substitute An Alternate Anchorage From Tables D1 or D2 Which Meets or Exceeds The Lowered Brace Reaction.
3. At Max. 50 Degree Brace Inclination.
4. Min. 3,000 psi NWC. Any "N Series" Connection May Be Utilized Having A Numeric Designation Equal To Or Higher Than That Shown.
5. Min. 3,000 psi NWC or LWC. Any "L Series" Connection May Be Utilized Having A Numeric Designation Equal To Or Higher Than That Shown.
6. As An Alternate, Brace Anchorage Connections To Structure May Be Employed Using Any Detail From Structural Connections Section "D" Series Details Where Assembly Design Value Meets Or Exceeds Brace Reaction.
7. For Trade Specific Bracing Installation Notes, Refer To Page 7.1.
8. Utilize Any "G" Series Vertical Support Connection Having A Design Value Equal To Or Greater Than The Corresponding "Rod Total Vertical Load".

REVIEWED FOR CODE COMPLIANCE BY: HCAI OPM-0403 BY: William Staehlin DATE: 01-26-2024 CALIFORNIA BUILDING CODE

REGISTERED PROFESSIONAL ENGINEER MARCIN WASAZNIK S-6612 STRUCTURAL STATE OF CALIFORNIA

ISAT
A Division of Tomarco Contractor Specialties
International Seismic Application Technology
14848 Northam Street, La Mirada, CA 90638
877-999-4728 (Toll Free) 714-523-0845 (Fax)
www.isatsb.com

Rev. 1
11/19/18
Page
C36-0.5-45

4-WAY SPLAYED CABLE BRACING REQUIREMENTS [7]:

TRAPEZE MOUNTED ELECTRICAL SYSTEMS (Conduit, Cable Tray, Bus Duct, Bus Way) ***MAXIMUM SEISMIC DESIGN FORCE = 0.50 G's***

Requires Use of ISAT Seismic Brackets. Use of Any Non-ISAT Bracket Voids Engineering. 2013 California Building Code Compliant

Maximum Trapeze Load (lbs/lf)	Max. Vertical Support Spacing (ft.)	Rod [1, 8] Total Vertical Load (lbs)	Min. [8] Vertical Support Rod Dia. (in.)	4-WAY SPLAYED CABLE BRACING REQUIREMENTS				
				Max. [2] Brace Spacing (ft.)	Brace [3] Reaction P (lbs)	Min. Brace Assembly E - Pages	Min. Brace Anchorage [6] Form Pour [4] Deck Page D1	Min. Brace Anchorage [6] Metal [5] Deck Page D2
				4-Way Splayed Brace Pattern (B24.2, B43.2, B46.2)				
11.0	10	97	1/2	40	622	C12AA04WS	N7	L7
25.0	10	219	5/8	40	1,414	C58AA06WS	N15	L15
35.0	10	307	5/8	28	1,386	C58AA06WS	N14	L14
50.0	10	439	5/8	20	1,414	C58AA06WS	N15	L15
65.0	10	570	5/8	16	1,471	C58AA06WS	N15	L15
75.0	10	658	5/8	12	1,273	C58AA06WS	N13	L13
100.0	10	878	5/8	10	1,414	C58AA06WS	N15	L15

1. TVL = DL + Fv + ($0.2S_{DS}$ x 0.70 x Wp). All Terms Are Working Loads. Based On Eccentric Loading, 65% Of Total Load Allocated Per Rod.
2. Reductions In Actual Installed Brace Spacing Will Result In An Equal Percentage Reduction In Brace Reaction. As An Option When This Occurs ISAT May Substitute An Alternate Anchorage From Tables D1 or D2 Which Meets or Exceeds The Lowered Brace Reaction.
3. At Max. 60 Degree Brace Inclination.
4. Min. 3,000 psi NWC. Any "N Series" Connection May Be Utilized Having A Numeric Designation Equal To Or Higher Than That Shown.
5. Min. 3,000 psi NWC or LWC. Any "L Series" Connection May Be Utilized Having A Numeric Designation Equal To Or Higher Than That Shown.
6. As An Alternate, Brace Anchorage Connections To Structure May Be Employed Using Any Detail From Structural Connections Section "D" Series Details Where Assembly Design Value Meets Or Exceeds Brace Reaction.
7. For Trade Specific Bracing Installation Notes, Refer To Page 7.1.
8. Utilize Any "G" Series Vertical Support Connection Having A Design Value Equal To Or Greater Than The Corresponding "Rod Total Vertical Load".

REVIEWED FOR CODE COMPLIANCE
HCAI
OPM-0403
BY: William Staehlin
DATE: 01-26-2024
CALIFORNIA BUILDING CODE, 2019

REGISTERED PROFESSIONAL ENGINEER
MARCIN WASAZNIK
S 6612
STRUCTURAL
STATE OF CALIFORNIA

ISAT
A Division of Tomarco Contractor Specialties
International Seismic Application Technology
14848 Northam Street, La Mirada, CA 90638
877-999-4728 (Toll Free) 714-523-0845 (Fax)
www.isatsb.com

Rev. 1
11/19/18
Page
C36-0.5-60

4-WAY SPLAYED CABLE BRACING REQUIREMENTS [7]:

TRAPEZE MOUNTED ELECTRICAL SYSTEMS (Conduit, Cable Tray, Bus Duct, Bus Way) ***MAXIMUM SEISMIC DESIGN FORCE = 0.75 G's***

Requires Use of ISAT Seismic Brackets. Use of Any Non-ISAT Bracket Voids Engineering. 2013 California Building Code Compliant

Maximum Trapeze Load (lbs/lf)	Max. Vertical Support Spacing (ft.)	Rod [1, 8] Total Vertical Load (lbs)	Min. [8] Vertical Support Rod Dia. (in.)	4-WAY SPLAYED CABLE BRACING REQUIREMENTS				
				Max. [2] Brace Spacing (ft.)	Brace [3] Reaction P (lbs)	Min. Brace Assembly E - Pages	Min. Brace Anchorage [6] Form Pour [4] Deck Page D1	Min. Brace Anchorage [6] Metal [5] Deck Page D2
				4-Way Splayed Brace Pattern (B24.2, B43.2, B46.2)				
11.0	10	97	3/8	40	539	C38AA04WS	N6	L6
25.0	10	219	1/2	40	1,225	C12AA06WS	N13	L13
35.0	10	307	1/2	32	1,372	C12AA06WS	N14	L14
50.0	10	439	1/2	22	1,347	C12AA06WS	N14	L14
65.0	10	570	1/2	18	1,433	C12AA06WS	N15	L15
75.0	10	658	1/2	14	1,286	C12AA06WS	N13	L13
100.0	10	878	1/2	10	1,225	C12AA06WS	N13	L13

1. TVL = DL + Fv + ($0.2S_{DS}$ x 0.70 x Wp). All Terms Are Working Loads. Based On Eccentric Loading, 65% Of Total Load Allocated Per Rod.
2. Reductions In Actual Installed Brace Spacing Will Result In An Equal Percentage Reduction In Brace Reaction. As An Option When This Occurs ISAT May Substitute An Alternate Anchorage From Tables D1 or D2 Which Meets or Exceeds The Lowered Brace Reaction.
3. At Max. 30 Degree Brace Inclination.
4. Min. 3,000 psi NWC. Any "N Series" Connection May Be Utilized Having A Numeric Designation Equal To Or Higher Than That Shown.
5. Min. 3,000 psi NWC or LWC. Any "L Series" Connection May Be Utilized Having A Numeric Designation Equal To Or Higher Than That Shown.
6. As An Alternate, Brace Anchorage Connections To Structure May Be Employed Using Any Detail From Structural Connections Section "D" Series Details Where Assembly Design Value Meets Or Exceeds Brace Reaction.
7. For Trade Specific Bracing Installation Notes, Refer To Page 7.1.
8. Utilize Any "G" Series Vertical Support Connection Having A Design Value Equal To Or Greater Than The Corresponding "Rod Total Vertical Load".

REVIEWED FOR CODE COMPLIANCE
HCAI
OPM-0403
BY: William Staehlin
DATE: 01-26-2024
CALIFORNIA BUILDING CODE, 2019

REGISTERED PROFESSIONAL ENGINEER
MARCIN WASAZNIK
S 6612
STRUCTURAL
STATE OF CALIFORNIA

ISAT
A Division of Tomarco Contractor Specialties

International Seismic Application Technology
14848 Northam Street, La Mirada, CA 90638
877-999-4728 (Toll Free) 714-523-0845 (Fax)
www.isatsb.com

Rev. 1
11/19/18
Page
C36-0.75-30

4-WAY SPLAYED CABLE BRACING REQUIREMENTS [7]:

TRAPEZE MOUNTED ELECTRICAL SYSTEMS (Conduit, Cable Tray, Bus Duct, Bus Way) ***MAXIMUM SEISMIC DESIGN FORCE = 0.75 G's***

Requires Use of ISAT Seismic Brackets. Use of Any Non-ISAT Bracket Voids Engineering. 2013 California Building Code Compliant

Maximum Trapeze Load (lbs/lf)	Max. Vertical Support Spacing (ft.)	Rod [1, 8] Total Vertical Load (lbs)	Min. [8] Vertical Support Rod Dia. (in.)	4-WAY SPLAYED CABLE BRACING REQUIREMENTS				
				Max. [2] Brace Spacing (ft.)	Brace [3] Reaction P (lbs)	Min. Brace Assembly E - Pages	Min. Brace Anchorage [6] Form Pour [4] Deck Page D1	Min. Brace Anchorage [6] Metal [5] Deck Page D2
				4-Way Splayed Brace Pattern (B24.2, B43.2, B46.2)				
11.0	10	97	1/2	40	726	C12AA06WS	N8	L8
25.0	10	219	5/8	40	1,650	C58DG06TS	N17	L17
35.0	10	307	5/8	30	1,733	C58DG06TS	N18	L18
50.0	10	439	5/8	22	1,815	C58DG06TS	N19	L19
65.0	10	570	5/8	16	1,716	C58DG06TS	N18	L18
75.0	10	658	5/8	14	1,733	C58DG06TS	N18	L18
100.0	10	878	5/8	10	1,650	C58DG06TS	N17	L17

1. TVL = DL + Fv + ($0.2S_{DS}$ x 0.70 x Wp). All Terms Are Working Loads. Based On Eccentric Loading, 65% Of Total Load Allocated Per Rod.
2. Reductions In Actual Installed Brace Spacing Will Result In An Equal Percentage Reduction In Brace Reaction. As An Option When This Occurs ISAT May Substitute An Alternate Anchorage From Tables D1 or D2 Which Meets or Exceeds The Lowered Brace Reaction.
3. At Max. 50 Degree Brace Inclination.
4. Min. 3,000 psi NWC. Any "N Series" Connection May Be Utilized Having A Numeric Designation Equal To Or Higher Than That Shown.
5. Min. 3,000 psi NWC or LWC. Any "L Series" Connection May Be Utilized Having A Numeric Designation Equal To Or Higher Than That Shown.
6. As An Alternate, Brace Anchorage Connections To Structure May Be Employed Using Any Detail From Structural Connections Section "D" Series Details Where Assembly Design Value Meets Or Exceeds Brace Reaction.
7. For Trade Specific Bracing Installation Notes, Refer To Page 7.1.
8. Utilize Any "G" Series Vertical Support Connection Having A Design Value Equal To Or Greater Than The Corresponding "Rod Total Vertical Load".

REVIEWED FOR CODE COMPLIANCE
HCAI
OPM-0403
BY: William Staehlin
DATE: 01-26-2024
CALIFORNIA BUILDING CODE, 2013

REGISTERED PROFESSIONAL ENGINEER
MARCIN WASAZNIK
S 6612
STRUCTURAL
STATE OF CALIFORNIA

ISAT
A Division of Tomarco Contractor Specialties
International Seismic Application Technology
14848 Northam Street, La Mirada, CA 90638
877-999-4728 (Toll Free) 714-523-0845 (Fax)
www.isatsb.com

Rev. 1
11/19/18
Page
C36-0.75-45

4-WAY SPLAYED CABLE BRACING REQUIREMENTS [7]:

TRAPEZE MOUNTED ELECTRICAL SYSTEMS (Conduit, Cable Tray, Bus Duct, Bus Way) ***MAXIMUM SEISMIC DESIGN FORCE = 0.75 G's***

Requires Use of ISAT Seismic Brackets. *Use of Any Non-ISAT Bracket Voids Engineering.* *2013 California Building Code Compliant*

Maximum Trapeze Load (lbs/lf)	Max. Vertical Support Spacing (ft.)	Rod [1, 8] Total Vertical Load (lbs)	Min. [8] Vertical Support Rod Dia. (in.)	4-WAY SPLAYED CABLE BRACING REQUIREMENTS				
				Max. [2] Brace Spacing (ft.)	Brace [3] Reaction P (lbs)	Min. Brace Assembly E - Pages	Min. Brace Anchorage [6] Form Pour [4] Deck Page D1	Min. Brace Anchorage [6] Metal [5] Deck Page D2
				4-Way Splayed Brace Pattern (B24.2, B43.2, B46.2)				
11.0	10	97	1/2	40	933	C12AA06WS	N10	L10
25.0	10	219	5/8	26	1,379	C58AA06WS	N14	L14
35.0	10	307	5/8	18	1,336	C58AA06WS	N14	L14
50.0	10	439	5/8	12	1,273	C58AA06WS	N13	L13
65.0	10	570	5/8	10	1,379	C58AA06WS	N14	L14

1. TVL = DL + Fv + ($0.2S_{DS}$ x 0.70 x Wp). All Terms Are Working Loads. Based On Eccentric Loading, 65% Of Total Load Allocated Per Rod.
2. Reductions In Actual Installed Brace Spacing Will Result In An Equal Percentage Reduction In Brace Reaction. As An Option When This Occurs ISAT May Substitute An Alternate Anchorage From Tables D1 or D2 Which Meets or Exceeds The Lowered Brace Reaction.
3. At Max. 60 Degree Brace Inclination.
4. Min. 3,000 psi NWC. Any "N Series" Connection May Be Utilized Having A Numeric Designation Equal To Or Higher Than That Shown.
5. Min. 3,000 psi NWC or LWC. Any "L Series" Connection May Be Utilized Having A Numeric Designation Equal To Or Higher Than That Shown.
6. As An Alternate, Brace Anchorage Connections To Structure May Be Employed Using Any Detail From Structural Connections Section "D" Series Details Where Assembly Design Value Meets Or Exceeds Brace Reaction.
7. For Trade Specific Bracing Installation Notes, Refer To Page 7.1.
8. Utilize Any "G" Series Vertical Support Connection Having A Design Value Equal To Or Greater Than The Corresponding "Rod Total Vertical Load".

REVIEWED FOR CODE COMPLIANCE
HCAI
OPM-0403
By: William Staehlin
DATE: 01-26-2024
CALIFORNIA BUILDING CODE, 2022

REGISTERED PROFESSIONAL ENGINEER
MARCIN WASAZNIK
S-6612
STRUCTURAL
STATE OF CALIFORNIA

ISAT
A Division of Tomarco Contractor Specialties

International Seismic Application Technology
14848 Northam Street, La Mirada, CA 90638
877-999-4728 (Toll Free) 714-523-0845 (Fax)
www.isatsb.com

Rev. 1
11/19/18
Page
C36-0.75-60

4-WAY SPLAYED CABLE BRACING REQUIREMENTS [7]:

TRAPEZE MOUNTED ELECTRICAL SYSTEMS (Conduit, Cable Tray, Bus Duct, Bus Way) ***MAXIMUM SEISMIC DESIGN FORCE = 1.00 G's***

Requires Use of ISAT Seismic Brackets. Use of Any Non-ISAT Bracket Voids Engineering. 2013 California Building Code Compliant

Maximum Trapeze Load (lbs/lf)	Max. Vertical Support Spacing (ft.)	Rod [1, 8] Total Vertical Load (lbs)	Min. [8] Vertical Support Rod Dia. (in.)	4-WAY SPLAYED CABLE BRACING REQUIREMENTS				
				Max. [2] Brace Spacing (ft.)	Brace [3] Reaction P (lbs)	Min. Brace Assembly E - Pages	Min. Brace Anchorage [6] Form Pour [4] Deck Page D1	Min. Brace Anchorage [6] Metal [5] Deck Page D2
				4-Way Splayed Brace Pattern (B24.2, B43.2, B46.2)				
11.0	10	97	3/8	40	719	C38AA06WS	N8	L8
25.0	10	219	1/2	34	1,388	C12AA06WS	N14	L14
35.0	10	307	1/2	24	1,372	C12AA06WS	N14	L14
50.0	10	439	1/2	16	1,306	C12AA06WS	N14	L14
65.0	10	570	1/2	12	1,274	C12AA06WS	N13	L13
75.0	10	658	1/2	10	1,225	C12AA06WS	N13	L13

1. TVL = DL + Fv + ($0.2S_{DS}$ x 0.70 x Wp). All Terms Are Working Loads. Based On Eccentric Loading, 65% Of Total Load Allocated Per Rod.
2. Reductions In Actual Installed Brace Spacing Will Result In An Equal Percentage Reduction In Brace Reaction. As An Option When This Occurs ISAT May Substitute An Alternate Anchorage From Tables D1 or D2 Which Meets or Exceeds The Lowered Brace Reaction.
3. At Max. 30 Degree Brace Inclination.
4. Min. 3,000 psi NWC. Any "N Series" Connection May Be Utilized Having A Numeric Designation Equal To Or Higher Than That Shown.
5. Min. 3,000 psi NWC or LWC. Any "L Series" Connection May Be Utilized Having A Numeric Designation Equal To Or Higher Than That Shown.
6. As An Alternate, Brace Anchorage Connections To Structure May Be Employed Using Any Detail From Structural Connections Section "D" Series Details Where Assembly Design Value Meets Or Exceeds Brace Reaction.
7. For Trade Specific Bracing Installation Notes, Refer To Page 7.1.
8. Utilize Any "G" Series Vertical Support Connection Having A Design Value Equal To Or Greater Than The Corresponding "Rod Total Vertical Load".

REVIEWED FOR CODE COMPLIANCE
HCAI
OPM-0403
BY: William Staehlin
DATE: 01-26-2024
CALIFORNIA BUILDING CODE, 2019

REGISTERED PROFESSIONAL ENGINEER
MARCIN WASAZNIK
S-6612
STRUCTURAL
STATE OF CALIFORNIA

ISAT
A Division of Tomarco Contractor Specialties

International Seismic Application Technology
14848 Northam Street, La Mirada, CA 90638
877-999-4728 (Toll Free) 714-523-0845 (Fax)
www.isatsb.com

Rev. 1
11/19/18
Page
C36-1-30

4-WAY SPLAYED CABLE BRACING REQUIREMENTS [7]:

TRAPEZE MOUNTED ELECTRICAL SYSTEMS (Conduit, Cable Tray, Bus Duct, Bus Way) ***MAXIMUM SEISMIC DESIGN FORCE = 1.00 G's***

Requires Use of ISAT Seismic Brackets. *Use of Any Non-ISAT Bracket Voids Engineering.* *2013 California Building Code Compliant*

Maximum Trapeze Load (lbs/lf)	Max. Vertical Support Spacing (ft.)	Rod [1, 8] Total Vertical Load (lbs)	Min. [8] Vertical Support Rod Dia. (in.)	4-WAY SPLAYED CABLE BRACING REQUIREMENTS				
				Max. [2] Brace Spacing (ft.)	Brace [3] Reaction P (lbs)	Min. Brace Assembly E - Pages	Min. Brace Anchorage [6] Form Pour [4] Deck Page D1	Min. Brace Anchorage [6] Metal [5] Deck Page D2
				4-Way Splayed Brace Pattern (B24.2, B43.2, B46.2)				
11.0	10	97	1/2	40	968	C12AA06WS	N10	L10
25.0	10	219	5/8	32	1,760	C58DG06TS	N18	L18
35.0	10	307	5/8	22	1,694	C58DG06TS	N17	L17
50.0	10	439	5/8	16	1,760	C58DG06TS	N18	L18
65.0	10	570	5/8	12	1,716	C58DG06TS	N18	L18
75.0	10	658	5/8	10	1,650	C58DG06TS	N17	L17

1. TVL = DL + Fv + ($0.2S_{DS}$ x 0.70 x Wp). All Terms Are Working Loads. Based On Eccentric Loading, 65% Of Total Load Allocated Per Rod.
2. Reductions In Actual Installed Brace Spacing Will Result In An Equal Percentage Reduction In Brace Reaction. As An Option When This Occurs ISAT May Substitute An Alternate Anchorage From Tables D1 or D2 Which Meets or Exceeds The Lowered Brace Reaction.
3. At Max. 50 Degree Brace Inclination.
4. Min. 3,000 psi NWC. Any "N Series" Connection May Be Utilized Having A Numeric Designation Equal To Or Higher Than That Shown.
5. Min. 3,000 psi NWC or LWC. Any "L Series" Connection May Be Utilized Having A Numeric Designation Equal To Or Higher Than That Shown.
6. As An Alternate, Brace Anchorage Connections To Structure May Be Employed Using Any Detail From Structural Connections Section "D" Series Details Where Assembly Design Value Meets Or Exceeds Brace Reaction.
7. For Trade Specific Bracing Installation Notes, Refer To Page 7.1.
8. Utilize Any "G" Series Vertical Support Connection Having A Design Value Equal To Or Greater Than The Corresponding "Rod Total Vertical Load".

REVIEWED FOR CODE COMPLIANCE
HCAI
OPM-0403
BY: William Staehlin
DATE: 01-26-2024
CALIFORNIA BUILDING CODE, 2019

REGISTERED PROFESSIONAL ENGINEER
MARCIN WASAZNIK
S 6612
STRUCTURAL
STATE OF CALIFORNIA

ISAT
A Division of Tomarco Contractor Specialties
International Seismic Application Technology
14848 Northam Street, La Mirada, CA 90638
877-999-4728 (Toll Free) 714-523-0845 (Fax)
www.isatsb.com

Rev. 1
11/19/18
Page
C36-1-45

4-WAY SPLAYED CABLE BRACING REQUIREMENTS [7]:

TRAPEZE MOUNTED ELECTRICAL SYSTEMS (Conduit, Cable Tray, Bus Duct, Bus Way) ***MAXIMUM SEISMIC DESIGN FORCE = 1.00 G's***

Requires Use of ISAT Seismic Brackets. *Use of Any Non-ISAT Bracket Voids Engineering.* *2013 California Building Code Compliant*

Maximum Trapeze Load (lbs/lf)	Max. Vertical Support Spacing (ft.)	Rod [1, 8] Total Vertical Load (lbs)	Min. [8] Vertical Support Rod Dia. (in.)	4-WAY SPLAYED CABLE BRACING REQUIREMENTS				
				Max. [2] Brace Spacing (ft.)	Brace [3] Reaction P (lbs)	Min. Brace Assembly E - Pages	Min. Brace Anchorage [6] Form Pour [4] Deck Page D1	Min. Brace Anchorage [6] Metal [5] Deck Page D2
				4-Way Splayed Brace Pattern (B24.2, B43.2, B46.2)				
11.0	10	97	5/8	40	1,245	C58AA06WS	N13	L13
25.0	10	219	5/8	20	1,414	C58AA06WS	N15	L15
35.0	10	307	5/8	14	1,386	C58AA06WS	N14	L14
50.0	10	439	5/8	10	1,414	C58AA06WS	N15	L15

1. TVL = DL + Fv + ($0.2S_{DS}$ x 0.70 x Wp). All Terms Are Working Loads. Based On Eccentric Loading, 65% Of Total Load Allocated Per Rod.
2. Reductions In Actual Installed Brace Spacing Will Result In An Equal Percentage Reduction In Brace Reaction. As An Option When This Occurs ISAT May Substitute An Alternate Anchorage From Tables D1 or D2 Which Meets or Exceeds The Lowered Brace Reaction.
3. At Max. 60 Degree Brace Inclination.
4. Min. 3,000 psi NWC. Any "N Series" Connection May Be Utilized Having A Numeric Designation Equal To Or Higher Than That Shown.
5. Min. 3,000 psi NWC or LWC. Any "L Series" Connection May Be Utilized Having A Numeric Designation Equal To Or Higher Than That Shown.
6. As An Alternate, Brace Anchorage Connections To Structure May Be Employed Using Any Detail From Structural Connections Section "D" Series Details Where Assembly Design Value Meets Or Exceeds Brace Reaction.
7. For Trade Specific Bracing Installation Notes, Refer To Page 7.1.
8. Utilize Any "G" Series Vertical Support Connection Having A Design Value Equal To Or Greater Than The Corresponding "Rod Total Vertical Load".

REVIEWED FOR CODE COMPLIANCE BY HCAI
OPM-0403
BY: William Staehlin
DATE: 01-26-2024
CALIFORNIA BUILDING CODE, 2022

REGISTERED PROFESSIONAL ENGINEER
MARCIN WASAZNIK
S-6612
STRUCTURAL
STATE OF CALIFORNIA

ISAT
A Division of Tomarco Contractor Specialties

International Seismic Application Technology
14848 Northam Street, La Mirada, CA 90638
877-999-4728 (Toll Free) 714-523-0845 (Fax)
www.isatsb.com

Rev. 1
11/19/18
Page
C36-1-60

4-WAY SPLAYED CABLE BRACING REQUIREMENTS [7]:

2-TIERED TRAPEZE MOUNTED ELECTRICAL SYSTEMS (Conduit, Cable Tray, Bus Duct, Bus Way) ***MAXIMUM SEISMIC DESIGN FORCE = 0.25 G's***

Requires Use of ISAT Seismic Brackets. Use of Any Non-ISAT Bracket Voids Engineering. 2013 California Building Code Compliant

Combined 2-Tier Maximum Trapeze Load (lbs/lf)	Max. Vertical Support Spacing (ft.)	Rod [1, 8] Total Vertical Load (lbs)	Min. [8] Vertical Support Rod Dia. (in.)	4-WAY SPLAYED CABLE BRACING REQUIREMENTS				
				Max. [2] Brace Spacing (ft.)	Brace [3] Reaction P (lbs)	Min. Brace Assembly E - Pages	Min. Brace Anchorage [6] Form Pour [4] Deck Page D1	Min. Brace Anchorage [6] Metal [5] Deck Page D2
				4-Way Splayed Brace Pattern (B25.2)				
11.0	10	97	3/8	40	90	C38AA04WS	N1	L1
25.0	10	219	1/2	40	204	C12AA04WS	N3	L3
35.0	10	307	1/2	40	286	C12AA04WS	N3	L3
50.0	10	439	1/2	40	408	C12AA04WS	N5	L5
65.0	10	570	1/2	40	531	C12AA04WS	N6	L6
75.0	10	658	1/2	40	612	C12AA04WS	N7	L7
100.0	10	878	1/2	40	816	C12AA06WS	N9	L9
125.0	10	1,097	1/2	40	1,021	C12AA06WS	N11	L11
150.0	10	1,316	5/8	40	1,225	C58AA06WS	N13	L13
175.0	10	1,536	5/8	40	1,429	C58AA06WS	N15	L15
200.0	10	1,755	5/8	34	1,388	C58AA06WS	N14	L14
225.0	10	1,974	5/8	30	1,378	C58AA06WS	N14	L14

1. TVL = DL + Fv + ($0.2S_{DS}$ x 0.70 x Wp). All Terms Are Working Loads. Based On Eccentric Loading, 65% Of Total Load Allocated Per Rod.
2. Reductions In Actual Installed Brace Spacing Will Result In An Equal Percentage Reduction In Brace Reaction. As An Option When This Occurs ISAT May Substitute An Alternate Anchorage From Tables D1 or D2 Which Meets or Exceeds The Lowered Brace Reaction.
3. At Max. 30 Degree Brace Inclination.
4. Min. 3,000 psi NWC. Any "N Series" Connection May Be Utilized Having A Numeric Designation Equal To Or Higher Than That Shown.
5. Min. 3,000 psi NWC or LWC. Any "L Series" Connection May Be Utilized Having A Numeric Designation Equal To Or Higher Than That Shown.
6. As An Alternate, Brace Anchorage Connections To Structure May Be Employed Using Any Detail From Structural Connections Section "D" Series Details Where Assembly Design Value Meets Or Exceeds Brace Reaction.
7. For Trade Specific Bracing Installation Notes, Refer To Page 7.1.
8. Utilize Any "G" Series Vertical Support Connection Having A Design Value Equal To Or Greater Than The Corresponding "Rod Total Vertical Load".

REVIEWED FOR CODE COMPLIANCE
HCAI
OPM-0403
BY: William Staehlin
DATE: 01-26-2024
CALIFORNIA BUILDING CODES

REGISTERED PROFESSIONAL ENGINEER
MARCIN WASAZNIK
S-6612
STRUCTURAL
STATE OF CALIFORNIA

ISAT
A Division of Tomarco Contractor Specialties

International Seismic Application Technology
14848 Northam Street, La Mirada, CA 90638
877-999-4728 (Toll Free) 714-523-0845 (Fax)
www.isatsb.com

Rev. 1
11/19/18
Page
C36-0.25-30
2- Tier

4-WAY SPLAYED CABLE BRACING REQUIREMENTS [7]:

2-TIERED TRAPEZE MOUNTED ELECTRICAL SYSTEMS (Conduit, Cable Tray, Bus Duct, Bus Way) ***MAXIMUM SEISMIC DESIGN FORCE = 0.25 G's***

Requires Use of ISAT Seismic Brackets. Use of Any Non-ISAT Bracket Voids Engineering. 2013 California Building Code Compliant

Combined 2-Tier Maximum Trapeze Load (lbs/lf)	Max. Vertical Support Spacing (ft.)	Rod [1, 8] Total Vertical Load (lbs)	Min. [8] Vertical Support Rod Dia. (in.)	4-WAY SPLAYED CABLE BRACING REQUIREMENTS				
				Max. [2] Brace Spacing (ft.)	Brace [3] Reaction P (lbs)	Min. Brace Assembly E - Pages	Min. Brace Anchorage [6] Form Pour [4] Deck Page D1	Min. Brace Anchorage [6] Metal [5] Deck Page D2
				4-Way Splayed Brace Pattern (B25.2)				
11.0	10	97	3/8	40	121	C38AA04WS	N2	L2
25.0	10	219	1/2	40	275	C12AA04WS	N3	L3
35.0	10	307	1/2	40	385	C12AA04WS	N4	L4
50.0	10	439	1/2	40	550	C12AA04WS	N6	L6
65.0	10	570	5/8	40	715	C58AA06WS	N8	L8
75.0	10	658	5/8	40	825	C58AA06WS	N9	L9
100.0	10	878	3/4	40	1,100	C34DG06WS	N12	L12
125.0	10	1,097	3/4	38	1,306	C34DG06WS	N14	L14
150.0	10	1,316	3/4	32	1,320	C34DG06WS	N14	L14
175.0	10	1,536	3/4	27	1,299	C34DG06WS	N13	L13
200.0	10	1,755	3/4	24	1,320	C34DG06WS	N14	L14
225.0	10	1,974	3/4	22	1,361	C34DG06WS	N14	L14

1. TVL = DL + Fv + ($0.2S_{DS}$ x 0.70 x Wp). All Terms Are Working Loads. Based On Eccentric Loading, 65% Of Total Load Allocated Per Rod.
2. Reductions In Actual Installed Brace Spacing Will Result In An Equal Percentage Reduction In Brace Reaction. As An Option When This Occurs ISAT May Substitute An Alternate Anchorage From Tables D1 or D2 Which Meets or Exceeds The Lowered Brace Reaction.
3. At Max. 50 Degree Brace Inclination.
4. Min. 3,000 psi NWC. Any "N Series" Connection May Be Utilized Having A Numeric Designation Equal To Or Higher Than That Shown.
5. Min. 3,000 psi NWC or LWC. Any "L Series" Connection May Be Utilized Having A Numeric Designation Equal To Or Higher Than That Shown.
6. As An Alternate, Brace Anchorage Connections To Structure May Be Employed Using Any Detail From Structural Connections Section "D" Series Details Where Assembly Design Value Meets Or Exceeds Brace Reaction.
7. For Trade Specific Bracing Installation Notes, Refer To Page 7.1.
8. Utilize Any "G" Series Vertical Support Connection Having A Design Value Equal To Or Greater Than The Corresponding "Rod Total Vertical Load".

REVIEWED FOR CODE COMPLIANCE
HCAI
OPM-0403
BY: William Staehlin
DATE: 01-26-2024
CALIFORNIA BUILDING CODES

REGISTERED PROFESSIONAL ENGINEER
MARCIN WASAZNIK
S 6612
STRUCTURAL
STATE OF CALIFORNIA

ISAT
A Division of Tomarco Contractor Specialties

International Seismic Application Technology
14848 Northam Street, La Mirada, CA 90638
877-999-4728 (Toll Free) 714-523-0845 (Fax)
www.isatsb.com

Rev. 2
03/12/19
Page
C36-0.25-45
2- Tier

4-WAY SPLAYED CABLE BRACING REQUIREMENTS [7]:

2-TIERED TRAPEZE MOUNTED ELECTRICAL SYSTEMS (Conduit, Cable Tray, Bus Duct, Bus Way) ***MAXIMUM SEISMIC DESIGN FORCE = 0.25 G's***

Requires Use of ISAT Seismic Brackets. Use of Any Non-ISAT Bracket Voids Engineering. 2013 California Building Code Compliant

Combined 2-Tier Maximum Trapeze Load (lbs/lf)	Max. Vertical Support Spacing (ft.)	Rod [1, 8] Total Vertical Load (lbs)	Min. [8] Vertical Support Rod Dia. (in.)	4-WAY SPLAYED CABLE BRACING REQUIREMENTS				
				Max. [2] Brace Spacing (ft.)	Brace [3] Reaction P (lbs)	Min. Brace Assembly Page E3	Min. Brace Anchorage [6] Form Pour [4] Deck Page D1	Min. Brace Anchorage [6] Metal [5] Deck Page D2
				4-Way Splayed Brace Pattern (B25.2)				
11.0	10	97	3/8	40	156	C38AA04WS	N2	L2
25.0	10	219	1/2	40	354	C12AA04WS	N4	L4
35.0	10	307	1/2	40	495	C12AA04WS	N5	L5
50.0	10	439	5/8	40	707	C58AA06WS	N8	L8
65.0	10	570	3/4	40	919	C34DG06WS	N10	L10
75.0	10	658	3/4	40	1,061	C34DG06WS	N11	L11
100.0	10	878	3/4	32	1,131	C34DG06WS	N12	L12
125.0	10	1,097	3/4	26	1,149	C34DG06WS	N12	L12
150.0	10	1,316	3/4	22	1,167	C34DG06WS	N12	L12
175.0	10	1,536	3/4	18	1,114	C34DG06WS	N12	L12
200.0	10	1,755	3/4	16	1,131	C34DG06WS	N12	L12
225.0	10	1,974	3/4	14	1,114	C34DG06WS	N12	L12

1. TVL = DL + Fv + ($0.2S_{DS}$ x 0.70 x Wp). All Terms Are Working Loads. Based On Eccentric Loading, 65% Of Total Load Allocated Per Rod.
2. Reductions In Actual Installed Brace Spacing Will Result In An Equal Percentage Reduction In Brace Reaction. As An Option When This Occurs ISAT May Substitute An Alternate Anchorage From Tables D1 or D2 Which Meets or Exceeds The Lowered Brace Reaction.
3. At Max. 60 Degree Brace Inclination.
4. Min. 3,000 psi NWC. Any "N Series" Connection May Be Utilized Having A Numeric Designation Equal To Or Higher Than That Shown.
5. Min. 3,000 psi NWC or LWC. Any "L Series" Connection May Be Utilized Having A Numeric Designation Equal To Or Higher Than That Shown.
6. As An Alternate, Brace Anchorage Connections To Structure May Be Employed Using Any Detail From Structural Connections Section "D" Series Details Where Assembly Design Value Meets Or Exceeds Brace Reaction.
7. For Trade Specific Bracing Installation Notes, Refer To Page 7.1.
8. Utilize Any "G" Series Vertical Support Connection Having A Design Value Equal To Or Greater Than The Corresponding "Rod Total Vertical Load".

REVIEWED FOR CODE COMPLIANCE BY: William Staehlin DATE: 01-26-2024 OPM-0403 HCAI CALIFORNIA BUILDING CODES

REGISTERED PROFESSIONAL ENGINEER MARCIN WASAZNIK S 6612 STRUCTURAL STATE OF CALIFORNIA

ISAT
A Division of Tomarco Contractor Specialties

International Seismic Application Technology
14848 Northam Street, La Mirada, CA 90638
877-999-4728 (Toll Free) 714-523-0845 (Fax)
www.isatsb.com

Rev. 2
03/12/19
Page
C36-0.25-60
2- Tier

4-WAY SPLAYED CABLE BRACING REQUIREMENTS [7] :

2-TIERED TRAPEZE MOUNTED ELECTRICAL SYSTEMS (Conduit, Cable Tray, Bus Duct, Bus Way) **MAXIMUM SEISMIC DESIGN FORCE = 0.50 G's**

Requires Use of ISAT Seismic Brackets. Use of Any Non-ISAT Bracket Voids Engineering. 2013 California Building Code Compliant

Combined 2-Tier Maximum Trapeze Load (lbs/lf)	Max. Vertical Support Spacing (ft.)	Rod [1, 8] Total Vertical Load (lbs)	Min. [8] Vertical Support Rod Dia. (in.)	4-WAY SPLAYED CABLE BRACING REQUIREMENTS				
				Max. [2] Brace Spacing (ft.)	Brace [3] Reaction P (lbs)	Min. Brace Assembly E - Pages	Min. Brace Anchorage [6] Form Pour [4] Deck Page D1	Min. Brace Anchorage [6] Metal [5] Deck Page D2
				4-Way Splayed Brace Pattern (B25.2)				
11.0	10	97	3/8	40	180	C38AA04WS	N2	L2
25.0	10	219	1/2	40	408	C12AA04WS	N5	L5
35.0	10	307	1/2	40	572	C12AA04WS	N6	L6
50.0	10	439	1/2	40	816	C12AA06WS	N9	L9
65.0	10	570	5/8	40	1,061	C58AA06WS	N11	L11
75.0	10	658	5/8	40	1,225	C58AA06WS	N13	L13
100.0	10	878	5/8	34	1,388	C58AA06WS	N14	L14
125.0	10	1,097	5/8	28	1,429	C58AA06WS	N15	L15
150.0	10	1,316	5/8	22	1,347	C58AA06WS	N14	L14
175.0	10	1,536	5/8	20	1,429	C58AA06WS	N15	L15
200.0	10	1,755	5/8	16	1,306	C58AA06WS	N14	L14
225.0	10	1,974	5/8	14	1,286	C58AA06WS	N13	L13

1. TVL = DL + Fv + ($0.2S_{DS}$ x 0.70 x Wp). All Terms Are Working Loads. Based On Eccentric Loading, 65% Of Total Load Allocated Per Rod.
2. Reductions In Actual Installed Brace Spacing Will Result In An Equal Percentage Reduction In Brace Reaction. As An Option When This Occurs ISAT May Substitute An Alternate Anchorage From Tables D1 or D2 Which Meets or Exceeds The Lowered Brace Reaction.
3. At Max. 30 Degree Brace Inclination.
4. Min. 3,000 psi NWC. Any "N Series" Connection May Be Utilized Having A Numeric Designation Equal To Or Higher Than That Shown.
5. Min. 3,000 psi NWC or LWC. Any "L Series" Connection May Be Utilized Having A Numeric Designation Equal To Or Higher Than That Shown.
6. As An Alternate, Brace Anchorage Connections To Structure May Be Employed Using Any Detail From Structural Connections Section "D" Series Details Where Assembly Design Value Meets Or Exceeds Brace Reaction.
7. For Trade Specific Bracing Installation Notes, Refer To Page 7.1.
8. Utilize Any "G" Series Vertical Support Connection Having A Design Value Equal To Or Greater Than The Corresponding "Rod Total Vertical Load".

REVIEWED FOR CODE COMPLIANCE
HCAi
OPM-0403
BY: William Staehlin
DATE: 01-26-2024
CALIFORNIA BUILDING CODE 2024

REGISTERED PROFESSIONAL ENGINEER
MARCIN WASAZNIK
S 6612
STRUCTURAL
STATE OF CALIFORNIA

ISAT
A Division of Tomarco Contractor Specialties
International Seismic Application Technology
14848 Northam Street, La Mirada, CA 90638
877-999-4728 (Toll Free) 714-523-0845 (Fax)
www.isatsb.com

Rev. 1
11/19/18
Page
C36-0.5-30
2- Tier

4-WAY SPLAYED CABLE BRACING REQUIREMENTS [7]:

2-TIERED TRAPEZE MOUNTED ELECTRICAL SYSTEMS (Conduit, Cable Tray, Bus Duct, Bus Way) ***MAXIMUM SEISMIC DESIGN FORCE = 0.50 G's***

Requires Use of ISAT Seismic Brackets. Use of Any Non-ISAT Bracket Voids Engineering. 2013 California Building Code Compliant

Combined 2-Tier Maximum Trapeze Load (lbs/lf)	Max. Vertical Support Spacing (ft.)	Rod [1, 8] Total Vertical Load (lbs)	Min. [8] Vertical Support Rod Dia. (in.)	4-WAY SPLAYED CABLE BRACING REQUIREMENTS				
				Max. [2] Brace Spacing (ft.)	Brace [3] Reaction P (lbs)	Min. Brace Assembly E - Pages	Min. Brace Anchorage [6] Form Pour [4] Deck Page D1	Min. Brace Anchorage [6] Metal [5] Deck Page D2
				4-Way Splayed Brace Pattern (B25.2)				
11.0	10	97	3/8	40	242	C38AA04WS	N3	L3
25.0	10	219	1/2	40	550	C12AA04WS	N6	L6
35.0	10	307	5/8	40	770	C58AA06WS	N8	L8
50.0	10	439	3/4	40	1,100	C34DG06WS	N12	L12
65.0	10	570	3/4	35	1,251	C34DG06WS	N13	L13
75.0	10	658	3/4	31	1,279	C34DG06WS	N13	L13
100.0	10	878	3/4	23	1,265	C34DG06WS	N13	L13
125.0	10	1,097	3/4	19	1,306	C34DG06WS	N14	L14
150.0	10	1,316	3/4	16	1,320	C34DG06WS	N14	L14
175.0	10	1,536	3/4	13	1,251	C34DG06WS	N13	L13
200.0	10	1,755	3/4	12	1,320	C34DG06WS	N14	L14
225.0	10	1,974	3/4	10	1,238	C34DG06WS	N13	L13

1. TVL = DL + Fv + ($0.2S_{DS}$ x 0.70 x Wp). All Terms Are Working Loads. Based On Eccentric Loading, 65% Of Total Load Allocated Per Rod.
2. Reductions In Actual Installed Brace Spacing Will Result In An Equal Percentage Reduction In Brace Reaction. As An Option When This Occurs ISAT May Substitute An Alternate Anchorage From Tables D1 or D2 Which Meets or Exceeds The Lowered Brace Reaction.
3. At Max. 50 Degree Brace Inclination.
4. Min. 3,000 psi NWC. Any "N Series" Connection May Be Utilized Having A Numeric Designation Equal To Or Higher Than That Shown.
5. Min. 3,000 psi NWC or LWC. Any "L Series" Connection May Be Utilized Having A Numeric Designation Equal To Or Higher Than That Shown.
6. As An Alternate, Brace Anchorage Connections To Structure May Be Employed Using Any Detail From Structural Connections Section "D" Series Details Where Assembly Design Value Meets Or Exceeds Brace Reaction.
7. For Trade Specific Bracing Installation Notes, Refer To Page 7.1.
8. Utilize Any "G" Series Vertical Support Connection Having A Design Value Equal To Or Greater Than The Corresponding "Rod Total Vertical Load".

REVIEWED FOR CODE COMPLIANCE BY: William Staehlin DATE: 01-26-2024 OPM-0403 HCAI CALIFORNIA BUILDING CODE

REGISTERED PROFESSIONAL ENGINEER MARCIN WASAZNIK S-6612 STRUCTURAL STATE OF CALIFORNIA

ISAT
A Division of Tomarco Contractor Specialties
International Seismic Application Technology
14848 Northam Street, La Mirada, CA 90638
877-999-4728 (Toll Free) 714-523-0845 (Fax)
www.isatsb.com

Rev. 2
03/12/19
Page
C36-0.5-45
2- Tier

4-WAY SPLAYED CABLE BRACING REQUIREMENTS [7]:

2-TIERED TRAPEZE MOUNTED ELECTRICAL SYSTEMS (Conduit, Cable Tray, Bus Duct, Bus Way) ***MAXIMUM SEISMIC DESIGN FORCE = 0.50 G's***

Requires Use of ISAT Seismic Brackets. Use of Any Non-ISAT Bracket Voids Engineering. 2013 California Building Code Compliant

Combined 2-Tier Maximum Trapeze Load (lbs/lf)	Max. Vertical Support Spacing (ft.)	Rod [1, 8] Total Vertical Load (lbs)	Min. [8] Vertical Support Rod Dia. (in.)	4-WAY SPLAYED CABLE BRACING REQUIREMENTS				
				Max. [2] Brace Spacing (ft.)	Brace [3] Reaction P (lbs)	Min. Brace Assembly Page E3	Min. Brace Anchorage [6] Form Pour [4] Deck Page D1	Min. Brace Anchorage [6] Metal [5] Deck Page D2
				4-Way Splayed Brace Pattern (B25.2)				
11.0	10	97	1/2	40	311	C12AA04WS	N4	L4
25.0	10	219	5/8	40	707	C58AA06WS	N8	L8
35.0	10	307	3/4	40	990	C34DG06WS	N10	L10
50.0	10	439	3/4	30	1,061	C34DG06WS	N11	L11
65.0	10	570	3/4	24	1,103	C34DG06WS	N12	L12
75.0	10	658	3/4	20	1,061	C34DG06WS	N11	L11
100.0	10	878	3/4	16	1,131	C34DG06WS	N12	L12
125.0	10	1,097	3/4	12	1,061	C34DG06WS	N11	L11
150.0	10	1,316	3/4	10	1,061	C34DG06WS	N11	L11

1. TVL = DL + Fv + ($0.2S_{DS}$ x 0.70 x Wp). All Terms Are Working Loads. Based On Eccentric Loading, 65% Of Total Load Allocated Per Rod.
2. Reductions In Actual Installed Brace Spacing Will Result In An Equal Percentage Reduction In Brace Reaction. As An Option When This Occurs ISAT May Substitute An Alternate Anchorage From Tables D1 or D2 Which Meets or Exceeds The Lowered Brace Reaction.
3. At Max. 60 Degree Brace Inclination.
4. Min. 3,000 psi NWC. Any "N Series" Connection May Be Utilized Having A Numeric Designation Equal To Or Higher Than That Shown.
5. Min. 3,000 psi NWC or LWC. Any "L Series" Connection May Be Utilized Having A Numeric Designation Equal To Or Higher Than That Shown.
6. As An Alternate, Brace Anchorage Connections To Structure May Be Employed Using Any Detail From Structural Connections Section "D" Series Details Where Assembly Design Value Meets Or Exceeds Brace Reaction.
7. For Trade Specific Bracing Installation Notes, Refer To Page 7.1.
8. Utilize Any "G" Series Vertical Support Connection Having A Design Value Equal To Or Greater Than The Corresponding "Rod Total Vertical Load".

REVIEWED FOR CODE COMPLIANCE
HCAI
OPM-0403
BY: William Staehlin
DATE: 01-26-2024
CALIFORNIA BUILDING CODE

REGISTERED PROFESSIONAL ENGINEER
MARCIN WASAZNIK
S 6612
STRUCTURAL
STATE OF CALIFORNIA

ISAT
A Division of Tomarco Contractor Specialties

International Seismic Application Technology
14848 Northam Street, La Mirada, CA 90638
877-999-4728 (Toll Free) 714-523-0845 (Fax)
www.isatsb.com

Rev. 2
03/12/19
Page
C36-0.5-60
2- Tier

4-WAY SPLAYED CABLE BRACING REQUIREMENTS [7] :

2-TIERED TRAPEZE MOUNTED ELECTRICAL SYSTEMS (Conduit, Cable Tray, Bus Duct, Bus Way) **MAXIMUM SEISMIC DESIGN FORCE = 0.75 G's**

Requires Use of ISAT Seismic Brackets. Use of Any Non-ISAT Bracket Voids Engineering. 2013 California Building Code Compliant

Combined 2-Tier Maximum Trapeze Load (lbs/lf)	Max. Vertical Support Spacing (ft.)	Rod [1, 8] Total Vertical Load (lbs)	Min. [8] Vertical Support Rod Dia. (in.)	4-WAY SPLAYED CABLE BRACING REQUIREMENTS				
				Max. [2] Brace Spacing (ft.)	Brace [3] Reaction P (lbs)	Min. Brace Assembly E - Pages	Min. Brace Anchorage [6] Form Pour [4] Deck Page D1	Min. Brace Anchorage [6] Metal [5] Deck Page D2
				4-Way Splayed Brace Pattern (B25.2)				
11.0	10	97	3/8	40	269	C38AA04WS	N3	L3
25.0	10	219	1/2	40	612	C12AA04WS	N7	L7
35.0	10	307	1/2	40	857	C12AA06WS	N9	L9
50.0	10	439	5/8	40	1,225	C58AA06WS	N13	L13
65.0	10	570	5/8	36	1,433	C58AA06WS	N15	L15
75.0	10	658	5/8	30	1,378	C58AA06WS	N14	L14
100.0	10	878	5/8	22	1,347	C58AA06WS	N14	L14
125.0	10	1,097	5/8	18	1,378	C58AA06WS	N14	L14
150.0	10	1,316	5/8	14	1,286	C58AA06WS	N13	L13
175.0	10	1,536	5/8	12	1,286	C58AA06WS	N13	L13
200.0	10	1,755	5/8	10	1,225	C58AA06WS	N13	L13
225.0	10	1,974	5/8	10	1,378	C58AA06WS	N14	L14

1. TVL = DL + Fv + ($0.2S_{DS}$ x 0.70 x Wp). All Terms Are Working Loads. Based On Eccentric Loading, 65% Of Total Load Allocated Per Rod.
2. Reductions In Actual Installed Brace Spacing Will Result In An Equal Percentage Reduction In Brace Reaction. As An Option When This Occurs ISAT May Substitute An Alternate Anchorage From Tables D1 or D2 Which Meets or Exceeds The Lowered Brace Reaction.
3. At Max. 30 Degree Brace Inclination.
4. Min. 3,000 psi NWC. Any "N Series" Connection May Be Utilized Having A Numeric Designation Equal To Or Higher Than That Shown.
5. Min. 3,000 psi NWC or LWC. Any "L Series" Connection May Be Utilized Having A Numeric Designation Equal To Or Higher Than That Shown.
6. As An Alternate, Brace Anchorage Connections To Structure May Be Employed Using Any Detail From Structural Connections Section "D" Series Details Where Assembly Design Value Meets Or Exceeds Brace Reaction.
7. For Trade Specific Bracing Installation Notes, Refer To Page 7.1.
8. Utilize Any "G" Series Vertical Support Connection Having A Design Value Equal To Or Greater Than The Corresponding "Rod Total Vertical Load".

REVIEWED FOR CODE COMPLIANCE
HCAi
OPM-0403
BY: William Staehlin
DATE: 01-26-2024
CALIFORNIA BUILDING CODE 2024

REGISTERED PROFESSIONAL ENGINEER
MARCIN WASAZNIK
S 6612
STRUCTURAL
STATE OF CALIFORNIA

ISAT
A Division of Tomarco Contractor Specialties
International Seismic Application Technology
14848 Northam Street, La Mirada, CA 90638
877-999-4728 (Toll Free) 714-523-0845 (Fax)
www.isatsb.com

Rev. 1
11/19/18
Page
C36-0.75-30
2- Tier

4-WAY SPLAYED CABLE BRACING REQUIREMENTS [7]:

2-TIERED TRAPEZE MOUNTED ELECTRICAL SYSTEMS (Conduit, Cable Tray, Bus Duct, Bus Way) ***MAXIMUM SEISMIC DESIGN FORCE = 0.75 G's***

Requires Use of ISAT Seismic Brackets. Use of Any Non-ISAT Bracket Voids Engineering. 2013 California Building Code Compliant

Combined 2-Tier Maximum Trapeze Load (lbs/lf)	Max. Vertical Support Spacing (ft.)	Rod [1, 8] Total Vertical Load (lbs)	Min. [8] Vertical Support Rod Dia. (in.)	4-WAY SPLAYED CABLE BRACING REQUIREMENTS				
				Max. [2] Brace Spacing (ft.)	Brace [3] Reaction P (lbs)	Min. Brace Assembly E - Pages	Min. Brace Anchorage [6] Form Pour [4] Deck Page D1	Min. Brace Anchorage [6] Metal [5] Deck Page D2
				4-Way Splayed Brace Pattern (B25.2)				
11.0	10	97	1/2	40	363	C12AA04WS	N4	L4
25.0	10	219	5/8	40	825	C58AA06WS	N9	L9
35.0	10	307	3/4	40	1,155	C34DG06WS	N12	L12
50.0	10	439	3/4	30	1,238	C34DG06WS	N13	L13
65.0	10	570	3/4	23	1,233	C34DG06WS	N13	L13
75.0	10	658	3/4	20	1,238	C34DG06WS	N13	L13
100.0	10	878	3/4	15	1,238	C34DG06WS	N13	L13
125.0	10	1,097	3/4	12	1,238	C34DG06WS	N13	L13
150.0	10	1,316	3/4	10	1,238	C34DG06WS	N13	L13

1. TVL = DL + Fv + ($0.2S_{DS}$ x 0.70 x Wp). All Terms Are Working Loads. Based On Eccentric Loading, 65% Of Total Load Allocated Per Rod.
2. Reductions In Actual Installed Brace Spacing Will Result In An Equal Percentage Reduction In Brace Reaction. As An Option When This Occurs ISAT May Substitute An Alternate Anchorage From Tables D1 or D2 Which Meets or Exceeds The Lowered Brace Reaction.
3. At Max. 50 Degree Brace Inclination.
4. Min. 3,000 psi NWC. Any "N Series" Connection May Be Utilized Having A Numeric Designation Equal To Or Higher Than That Shown.
5. Min. 3,000 psi NWC or LWC. Any "L Series" Connection May Be Utilized Having A Numeric Designation Equal To Or Higher Than That Shown.
6. As An Alternate, Brace Anchorage Connections To Structure May Be Employed Using Any Detail From Structural Connections Section "D" Series Details Where Assembly Design Value Meets Or Exceeds Brace Reaction.
7. For Trade Specific Bracing Installation Notes, Refer To Page 7.1.
8. Utilize Any "G" Series Vertical Support Connection Having A Design Value Equal To Or Greater Than The Corresponding "Rod Total Vertical Load".

REVIEWED FOR CODE COMPLIANCE
HCAI
OPM-0403
BY: William Staehlin
DATE: 01-26-2024
CALIFORNIA BUILDING CODE

REGISTERED PROFESSIONAL ENGINEER MARCIN WASAZNIK S-6612 STRUCTURAL STATE OF CALIFORNIA

ISAT
A Division of Tomarco Contractor Specialties
International Seismic Application Technology
14848 Northam Street, La Mirada, CA 90638
877-999-4728 (Toll Free) 714-523-0845 (Fax)
www.isatsb.com

Rev. 2
03/12/19
Page
C36-0.75-45
2- Tier

4-WAY SPLAYED CABLE BRACING REQUIREMENTS [7]:

2-TIERED TRAPEZE MOUNTED ELECTRICAL SYSTEMS (Conduit, Cable Tray, Bus Duct, Bus Way) ***MAXIMUM SEISMIC DESIGN FORCE = 0.75 G's***

Requires Use of ISAT Seismic Brackets. Use of Any Non-ISAT Bracket Voids Engineering. 2013 California Building Code Compliant

Combined 2-Tier Maximum Trapeze Load (lbs/lf)	Max. Vertical Support Spacing (ft.)	Rod [1, 8] Total Vertical Load (lbs)	Min. [8] Vertical Support Rod Dia. (in.)	4-WAY SPLAYED CABLE BRACING REQUIREMENTS				
				Max. [2] Brace Spacing (ft.)	Brace [3] Reaction P (lbs)	Min. Brace Assembly Page E3	Min. Brace Anchorage [6] Form Pour [4] Deck Page D1	Min. Brace Anchorage [6] Metal [5] Deck Page D2
				4-Way Splayed Brace Pattern (B25.2)				
11.0	10	97	1/2	40	467	C12AA04WS	N5	L5
25.0	10	219	3/4	40	1,061	C34DG06WS	N11	L11
35.0	10	307	3/4	28	1,039	C34DG06WS	N11	L11
50.0	10	439	3/4	20	1,061	C34DG06WS	N11	L11
65.0	10	570	3/4	16	1,103	C34DG06WS	N12	L12
75.0	10	658	3/4	14	1,114	C34DG06WS	N12	L12
100.0	10	878	3/4	10	1,061	C34DG06WS	N11	L11

1. TVL = DL + Fv + ($0.2S_{DS}$ x 0.70 x Wp). All Terms Are Working Loads. Based On Eccentric Loading, 65% Of Total Load Allocated Per Rod.
2. Reductions In Actual Installed Brace Spacing Will Result In An Equal Percentage Reduction In Brace Reaction. As An Option When This Occurs ISAT May Substitute An Alternate Anchorage From Tables D1 or D2 Which Meets or Exceeds The Lowered Brace Reaction.
3. At Max. 60 Degree Brace Inclination.
4. Min. 3,000 psi NWC. Any "N Series" Connection May Be Utilized Having A Numeric Designation Equal To Or Higher Than That Shown.
5. Min. 3,000 psi NWC or LWC. Any "L Series" Connection May Be Utilized Having A Numeric Designation Equal To Or Higher Than That Shown.
6. As An Alternate, Brace Anchorage Connections To Structure May Be Employed Using Any Detail From Structural Connections Section "D" Series Details Where Assembly Design Value Meets Or Exceeds Brace Reaction.
7. For Trade Specific Bracing Installation Notes, Refer To Page 7.1.
8. Utilize Any "G" Series Vertical Support Connection Having A Design Value Equal To Or Greater Than The Corresponding "Rod Total Vertical Load".

REVIEWED FOR CODE COMPLIANCE
HCAI
OPM-0403
BY: William Staehlin
DATE: 01-26-2024
CALIFORNIA BUILDING CODE, 2019

REGISTERED PROFESSIONAL ENGINEER
MARCIN WASAZNIK
S 6612
STRUCTURAL
STATE OF CALIFORNIA

ISAT
A Division of Tomarco Contractor Specialties
International Seismic Application Technology
14848 Northam Street, La Mirada, CA 90638
877-999-4728 (Toll Free) 714-523-0845 (Fax)
www.isatsb.com

Rev. 2
03/12/19
Page
C36-0.75-60
2- Tier

4-WAY SPLAYED CABLE BRACING REQUIREMENTS [7]:

2-TIERED TRAPEZE MOUNTED ELECTRICAL SYSTEMS (Conduit, Cable Tray, Bus Duct, Bus Way) ***MAXIMUM SEISMIC DESIGN FORCE = 1.00 G's***

Requires Use of ISAT Seismic Brackets. *Use of Any Non-ISAT Bracket Voids Engineering.* *2013 California Building Code Compliant*

Combined 2-Tier Maximum Trapeze Load (lbs/lf)	Max. Vertical Support Spacing (ft.)	Rod [1, 8] Total Vertical Load (lbs)	Min. [8] Vertical Support Rod Dia. (in.)	4-WAY SPLAYED CABLE BRACING REQUIREMENTS				
				Max. [2] Brace Spacing (ft.)	Brace [3] Reaction P (lbs)	Min. Brace Assembly E - Pages	Min. Brace Anchorage [6] Form Pour [4] Deck Page D1	Min. Brace Anchorage [6] Metal [5] Deck Page D2
				4-Way Splayed Brace Pattern (B25.2)				
11.0	10	97	3/8	40	359	C38AA04WS	N4	L4
25.0	10	219	1/2	40	816	C12AA06WS	N9	L9
35.0	10	307	5/8	40	1,143	C58AA06WS	N12	L12
50.0	10	439	5/8	34	1,388	C58AA06WS	N14	L14
65.0	10	570	5/8	26	1,380	C58AA06WS	N14	L14
75.0	10	658	5/8	22	1,347	C58AA06WS	N14	L14
100.0	10	878	5/8	16	1,306	C58AA06WS	N14	L14
125.0	10	1,097	5/8	14	1,429	C58AA06WS	N15	L15
150.0	10	1,316	5/8	10	1,225	C58AA06WS	N13	L13
175.0	10	1,536	5/8	10	1,429	C58AA06WS	N15	L15

1. TVL = DL + Fv + ($0.2S_{DS}$ x 0.70 x Wp). All Terms Are Working Loads. Based On Eccentric Loading, 65% Of Total Load Allocated Per Rod.
2. Reductions In Actual Installed Brace Spacing Will Result In An Equal Percentage Reduction In Brace Reaction. As An Option When This Occurs ISAT May Substitute An Alternate Anchorage From Tables D1 or D2 Which Meets or Exceeds The Lowered Brace Reaction.
3. At Max. 30 Degree Brace Inclination.
4. Min. 3,000 psi NWC. Any "N Series" Connection May Be Utilized Having A Numeric Designation Equal To Or Higher Than That Shown.
5. Min. 3,000 psi NWC or LWC. Any "L Series" Connection May Be Utilized Having A Numeric Designation Equal To Or Higher Than That Shown.
6. As An Alternate, Brace Anchorage Connections To Structure May Be Employed Using Any Detail From Structural Connections Section "D" Series Details Where Assembly Design Value Meets Or Exceeds Brace Reaction.
7. For Trade Specific Bracing Installation Notes, Refer To Page 7.1.
8. Utilize Any "G" Series Vertical Support Connection Having A Design Value Equal To Or Greater Than The Corresponding "Rod Total Vertical Load".

REVIEWED FOR CODE COMPLIANCE
HCAI
OPM-0403
BY: William Staehlin
DATE: 01-26-2024
CALIFORNIA BUILDING CODES

REGISTERED PROFESSIONAL ENGINEER
MARCIN WASAZNIK
S 6612
STRUCTURAL
STATE OF CALIFORNIA

ISAT
A Division of Tomarco Contractor Specialties

International Seismic Application Technology
14848 Northam Street, La Mirada, CA 90638
877-999-4728 (Toll Free) 714-523-0845 (Fax)
www.isatsb.com

Rev. 1
11/19/18
Page
C36-1-30
2- Tier

4-WAY SPLAYED CABLE BRACING REQUIREMENTS [7]:

2-TIERED TRAPEZE MOUNTED ELECTRICAL SYSTEMS (Conduit, Cable Tray, Bus Duct, Bus Way) ***MAXIMUM SEISMIC DESIGN FORCE = 1.00 G's***

Requires Use of ISAT Seismic Brackets. Use of Any Non-ISAT Bracket Voids Engineering. 2013 California Building Code Compliant

Combined 2-Tier Maximum Trapeze Load (lbs/lf)	Max. Vertical Support Spacing (ft.)	Rod [1, 8] Total Vertical Load (lbs)	Min. [8] Vertical Support Rod Dia. (in.)	4-WAY SPLAYED CABLE BRACING REQUIREMENTS				
				Max. [2] Brace Spacing (ft.)	Brace [3] Reaction P (lbs)	Min. Brace Assembly E - Pages	Min. Brace Anchorage [6] Form Pour [4] Deck Page D1	Min. Brace Anchorage [6] Metal [5] Deck Page D2
				4-Way Splayed Brace Pattern (B25.2)				
11.0	10	97	1/2	40	484	C12AA04WS	N5	L5
25.0	10	219	3/4	40	1,100	C34DG06WS	N12	L12
35.0	10	307	3/4	32	1,232	C34DG06WS	N13	L13
50.0	10	439	3/4	23	1,265	C34DG06WS	N13	L13
65.0	10	570	3/4	17	1,216	C34DG06WS	N13	L13
75.0	10	658	3/4	15	1,238	C34DG06WS	N13	L13
100.0	10	878	3/4	11	1,210	C34DG06WS	N13	L13

1. TVL = DL + Fv + ($0.2S_{DS}$ x 0.70 x Wp). All Terms Are Working Loads. Based On Eccentric Loading, 65% Of Total Load Allocated Per Rod.
2. Reductions In Actual Installed Brace Spacing Will Result In An Equal Percentage Reduction In Brace Reaction. As An Option When This Occurs ISAT May Substitute An Alternate Anchorage From Tables D1 or D2 Which Meets or Exceeds The Lowered Brace Reaction.
3. At Max. 50 Degree Brace Inclination.
4. Min. 3,000 psi NWC. Any "N Series" Connection May Be Utilized Having A Numeric Designation Equal To Or Higher Than That Shown.
5. Min. 3,000 psi NWC or LWC. Any "L Series" Connection May Be Utilized Having A Numeric Designation Equal To Or Higher Than That Shown.
6. As An Alternate, Brace Anchorage Connections To Structure May Be Employed Using Any Detail From Structural Connections Section "D" Series Details Where Assembly Design Value Meets Or Exceeds Brace Reaction.
7. For Trade Specific Bracing Installation Notes, Refer To Page 7.1.
8. Utilize Any "G" Series Vertical Support Connection Having A Design Value Equal To Or Greater Than The Corresponding "Rod Total Vertical Load".

REVIEWED FOR CODE COMPLIANCE
HCAI
OPM-0403
BY: William Staehlin
DATE: 01-26-2024
CALIFORNIA BUILDING CODE, 2013

REGISTERED PROFESSIONAL ENGINEER
MARCIN WASAZNIK
S-6612
STRUCTURAL
STATE OF CALIFORNIA

ISAT
A Division of Tomarco Contractor Specialties
International Seismic Application Technology
14848 Northam Street, La Mirada, CA 90638
877-999-4728 (Toll Free) 714-523-0845 (Fax)
www.isatsb.com

Rev. 2
03/12/19
Page
C36-1-45
2- Tier

4-WAY SPLAYED CABLE BRACING REQUIREMENTS [7]:

2-TIERED TRAPEZE MOUNTED ELECTRICAL SYSTEMS (Conduit, Cable Tray, Bus Duct, Bus Way) ***MAXIMUM SEISMIC DESIGN FORCE = 1.00 G's***

Requires Use of ISAT Seismic Brackets. Use of Any Non-ISAT Bracket Voids Engineering. 2013 California Building Code Compliant

Combined 2-Tier Maximum Trapeze Load (lbs/lf)	Max. Vertical Support Spacing (ft.)	Rod [1, 8] Total Vertical Load (lbs)	Min. [8] Vertical Support Rod Dia. (in.)	4-WAY SPLAYED CABLE BRACING REQUIREMENTS				
				Max. [2] Brace Spacing (ft.)	Brace [3] Reaction P (lbs)	Min. Brace Assembly Page E3	Min. Brace Anchorage [6] Form Pour [4] Deck Page D1	Min. Brace Anchorage [6] Metal [5] Deck Page D2
				4-Way Splayed Brace Pattern (B25.2)				
11.0	10	97	5/8	40	622	C58AA04WS	N7	L7
25.0	10	219	3/4	30	1,061	C34DG06WS	N11	L11
35.0	10	307	3/4	22	1,089	C34DG06WS	N11	L11
50.0	10	439	3/4	14	990	C34DG06WS	N10	L10
65.0	10	570	3/4	12	1,103	C34DG06WS	N12	L12
75.0	10	658	3/4	10	1,061	C34DG06WS	N11	L11

1. TVL = DL + Fv + ($0.2S_{DS}$ x 0.70 x Wp). All Terms Are Working Loads. Based On Eccentric Loading, 65% Of Total Load Allocated Per Rod.
2. Reductions In Actual Installed Brace Spacing Will Result In An Equal Percentage Reduction In Brace Reaction. As An Option When This Occurs ISAT May Substitute An Alternate Anchorage From Tables D1 or D2 Which Meets or Exceeds The Lowered Brace Reaction.
3. At Max. 60 Degree Brace Inclination.
4. Min. 3,000 psi NWC. Any "N Series" Connection May Be Utilized Having A Numeric Designation Equal To Or Higher Than That Shown.
5. Min. 3,000 psi NWC or LWC. Any "L Series" Connection May Be Utilized Having A Numeric Designation Equal To Or Higher Than That Shown.
6. As An Alternate, Brace Anchorage Connections To Structure May Be Employed Using Any Detail From Structural Connections Section "D" Series Details Where Assembly Design Value Meets Or Exceeds Brace Reaction.
7. For Trade Specific Bracing Installation Notes, Refer To Page 7.1.
8. Utilize Any "G" Series Vertical Support Connection Having A Design Value Equal To Or Greater Than The Corresponding "Rod Total Vertical Load".

REVIEWED FOR CODE COMPLIANCE
HCAI
OPM-0403
BY: William Staehlin
DATE: 01-26-2024
CALIFORNIA BUILDING CODE, 2019

REGISTERED PROFESSIONAL ENGINEER
MARCIN WASAZNIK
S-6612
STRUCTURAL
STATE OF CALIFORNIA

ISAT
A Division of Tomarco Contractor Specialties
International Seismic Application Technology
14848 Northam Street, La Mirada, CA 90638
877-999-4728 (Toll Free) 714-523-0845 (Fax)
www.isatsb.com

Rev. 2
03/12/19
Page
C36-1-60
2- Tier

RIGID BRACING REQUIREMENTS [7]

3-ROD TRAPEZED ELECTRICAL SYSTEMS (Conduit, Cable Tray, Bus Duct, Bus Way) — **MAXIMUM SEISMIC DESIGN FORCE = 0.25 G's**

Requires Use of ISAT Seismic Brackets. Use of Any Non-ISAT Bracket Voids Engineering. — *2013 California Building Code Compliant*

Maximum Trapeze Load (lbs/lf)	Max. Vertical Support Spacing (ft.)	Inboard [1, 8] Rod Total Vertical Load (lbs)	Min. [8] Vertical Support Rod Dia. (in.)	INBOARD LONGITUDINAL BRACING REQUIREMENTS: Max. [2] Brace Spacing (ft.)	Brace [3] Reaction P (lbs)	Min. Brace Assembly E - Pages	Min. Brace Anchorage [6]: Form Pour [4] Deck Page D1	Min. Brace Anchorage [6]: Metal [5] Deck Page D2
				5-Way Transverse, Longitudinal Brace Pattern (B22.4)				
11.0	10	126	3/8	40	54	R38AAEM306	N1	L1
25.0	10	287	1/2	40	123	R12AAEM306	N2	L2
35.0	10	402	1/2	40	172	R12AAEM306	N2	L2
50.0	10	574	1/2	40	245	R12AAEM306	N3	L3
65.0	10	746	1/2	40	319	R12AAEM409	N4	L4
75.0	10	861	1/2	40	368	R12AAEM406	N4	L4
100.0	10	1,148	1/2	40	491	R12AAEM406	N5	L5
125.0	10	1,434	1/2	40	613	R12AAEM406	N7	L7
				6-Way Transverse, Longitudinal Brace Pattern (B22.5)				
150.0	10	1,721	1/2	40	736	R12AAEM509	N8	L8
175.0	10	2,008	1/2	40	859	R12AAEM506	N9	L9
200.0	10	2,295	1/2	40	981	R12AAEM506	N10	L10
225.0	10	2,582	5/8	40	1,104	R58AAEM506	N12	L12

1. TVL = DL + Fv + ($0.2S_{DS}$/1.4 x Wp). All Terms Are Working Loads. Based On Eccentric Loading, 85% Of Total Load Allocated Per Inboard Rod.
2. Reductions In Actual Installed Brace Spacing Will Result In An Equal Percentage Reduction In Brace Reaction. As An Option When This Occurs ISAT May Substitute An Alternate Anchorage From Tables D1 or D2 Which Meets or Exceeds The Lowered Brace Reaction.
3. At Max. 30 Degree Brace Inclination.
4. Min. 3,000 psi NWC. Any "N Series" Connection May Be Utilized Having A Numeric Designation Equal To Or Higher Than That Shown.
5. Min. 3,000 psi NWC or LWC. Any "L Series" Connection May Be Utilized Having A Numeric Designation Equal To Or Higher Than That Shown.
6. As An Alternate, Brace Anchorage Connections To Structure May Be Employed Using Any Detail From Structural Connections Section "D" Series Details Where Assembly Design Value Meets Or Exceeds Brace Reaction.
7. For Trade Specific Bracing Installation Notes, Refer To Page 7.1.
8. Utilize Any "G" Series Vertical Support Connection Having A Design Value Equal To Or Greater Than The Corresponding "Rod Total Vertical Load". Center Rod Does Not Undergo Compression. Rod Stiffening of Center Rod Not Required.

REVIEWED FOR CODE COMPLIANCE
HCAI
OPM-0403
BY: William Staehlin
DATE: 01-26-2024
CALIFORNIA BUILDING CODE

REGISTERED PROFESSIONAL ENGINEER MARCIN WASAZNIK S-6612 STRUCTURAL STATE OF CALIFORNIA

ISAT
A Division of Tomarco Contractor Specialties
International Seismic Application Technology
14848 Northam Street, La Mirada, CA 90638
877-999-4728 (Toll Free) 714-523-0845 (Fax)
www.isatsb.com

Rev. 1
11/19/18
Page
C37-0.25-30
Inboard

RIGID BRACING REQUIREMENTS [7]

3-ROD TRAPEZED ELECTRICAL SYSTEMS (Conduit, Cable Tray, Bus Duct, Bus Way) — **MAXIMUM SEISMIC DESIGN FORCE = 0.25 G's**

Requires Use of ISAT Seismic Brackets. Use of Any Non-ISAT Bracket Voids Engineering. — *2013 California Building Code Compliant*

Maximum Trapeze Load (lbs/lf)	Max. Vertical Support Spacing (ft.)	Inboard [1, 8] Rod Total Vertical Load (lbs)	Min. [8] Vertical Support Rod Dia. (in.)	INBOARD LONGITUDINAL BRACING REQUIREMENTS: Max. [2] Brace Spacing (ft.)	Brace [3] Reaction P (lbs)	Min. Brace Assembly E - Pages	Min. Brace Anchorage [6]: Form Pour [4] Deck Page D1	Min. Brace Anchorage [6]: Metal [5] Deck Page D2
				5-Way Transverse, Longitudinal Brace Pattern (B22.4)				
11.0	10	126	3/8	40	73	R38AAEM306	N1	L1
25.0	10	287	1/2	40	165	R12AAEM306	N2	L2
35.0	10	402	1/2	40	231	R12AAEM306	N3	L3
50.0	10	574	1/2	40	331	R12AAEM406	N4	L4
65.0	10	746	1/2	40	430	R12AAEM406	N5	L5
75.0	10	861	1/2	40	496	R12AAEM406	N5	L5
100.0	10	1,148	1/2	40	661	R12AAEM509	N7	L7
				6-Way Transverse, Longitudinal Brace Pattern (B22.5)				
125.0	10	1,434	1/2	40	826	R12AAEM506	N9	L9
150.0	10	1,721	1/2	40	992	R12AAEM506	N10	L10
175.0	10	2,008	1/2	40	1,157	R12AAEM506	N12	L12
200.0	10	2,295	1/2	40	1,322	R12AAEM506	N14	L14
225.0	10	2,582	5/8	40	1,488	R58AAEM606	N15	L15

1. TVL = DL + Fv + ($0.2S_{DS}$/1.4 x Wp). All Terms Are Working Loads. Based On Eccentric Loading, 85% Of Total Load Allocated Per Inboard Rod.
2. Reductions In Actual Installed Brace Spacing Will Result In An Equal Percentage Reduction In Brace Reaction. As An Option When This Occurs ISAT May Substitute An Alternate Anchorage From Tables D1 or D2 Which Meets or Exceeds The Lowered Brace Reaction.
3. At Max. 50 Degree Brace Inclination.
4. Min. 3,000 psi NWC. Any "N Series" Connection May Be Utilized Having A Numeric Designation Equal To Or Higher Than That Shown.
5. Min. 3,000 psi NWC or LWC. Any "L Series" Connection May Be Utilized Having A Numeric Designation Equal To Or Higher Than That Shown.
6. As An Alternate, Brace Anchorage Connections To Structure May Be Employed Using Any Detail From Structural Connections Section "D" Series Details Where Assembly Design Value Meets Or Exceeds Brace Reaction.
7. For Trade Specific Bracing Installation Notes, Refer To Page 7.1.
8. Utilize Any "G" Series Vertical Support Connection Having A Design Value Equal To Or Greater Than The Corresponding "Rod Total Vertical Load". Center Rod Does Not Undergo Compression. Rod Stiffening of Center Rod Not Required.

REVIEWED FOR CODE COMPLIANCE
HCAI
OPM-0403
BY: William Staehlin
DATE: 01-26-2024
CALIFORNIA BUILDING CODE

REGISTERED PROFESSIONAL ENGINEER MARCIN WASAZNIK S-6612 STRUCTURAL STATE OF CALIFORNIA

ISAT
A Division of Tomarco Contractor Specialties
International Seismic Application Technology
14848 Northam Street, La Mirada, CA 90638
877-999-4728 (Toll Free) 714-523-0845 (Fax)
www.isatsb.com

Rev. 1
11/19/18
Page
C37-0.25-45
Inboard

RIGID BRACING REQUIREMENTS [7]

3-ROD TRAPEZED ELECTRICAL SYSTEMS (Conduit, Cable Tray, Bus Duct, Bus Way) — **MAXIMUM SEISMIC DESIGN FORCE = 0.25 G's**

Requires Use of ISAT Seismic Brackets. Use of Any Non-ISAT Bracket Voids Engineering. — *2013 California Building Code Compliant*

Maximum Trapeze Load (lbs/lf)	Max. Vertical Support Spacing (ft.)	Inboard [1, 8] Rod Total Vertical Load (lbs)	Min. [8] Vertical Support Rod Dia. (in.)	INBOARD LONGITUDINAL BRACING REQUIREMENTS				
				Max. [2] Brace Spacing (ft.)	Brace [3] Reaction P (lbs)	Min. Brace Assembly E - Pages	Min. Brace Anchorage [6] Form Pour [4] Deck Page D1	Min. Brace Anchorage [6] Metal [5] Deck Page D2
				5-Way Transverse, Longitudinal Brace Pattern (B22.4)				
11.0	10	126	3/8	40	94	R38AAEM306	N1	L1
25.0	10	287	1/2	40	213	R12AAEM306	N3	L3
35.0	10	402	1/2	40	298	R12AAEM306	N3	L3
50.0	10	574	1/2	40	425	R12AAEM406	N5	L5
65.0	10	746	1/2	40	553	R12AAEM406	N6	L6
75.0	10	861	1/2	40	638	R12AAEM406	N7	L7
100.0	10	1,148	1/2	40	850	R12AAEM506	N9	L9
125.0	10	1,434	1/2	40	1,063	R12AAEM506	N11	L11
				6-Way Transverse, Longitudinal Brace Pattern (B22.5)				
150.0	10	1,721	1/2	40	1,275	R12AAEM506	N13	L13
175.0	10	2,008	1/2	40	1,488	R12AAEM606	N15	L15
200.0	10	2,295	1/2	40	1,700	R12AAEM606	N17	L17
225.0	10	2,582	5/8	40	1,913	R58AAEM606	N20	L20

1. TVL = DL + Fv + ($0.2S_{DS}$/1.4 x Wp). All Terms Are Working Loads. Based On Eccentric Loading, 85% Of Total Load Allocated Per Inboard Rod.
2. Reductions In Actual Installed Brace Spacing Will Result In An Equal Percentage Reduction In Brace Reaction. As An Option When This Occurs ISAT May Substitute An Alternate Anchorage From Tables D1 or D2 Which Meets or Exceeds The Lowered Brace Reaction.
3. At Max. 60 Degree Brace Inclination.
4. Min. 3,000 psi NWC. Any "N Series" Connection May Be Utilized Having A Numeric Designation Equal To Or Higher Than That Shown.
5. Min. 3,000 psi NWC or LWC. Any "L Series" Connection May Be Utilized Having A Numeric Designation Equal To Or Higher Than That Shown.
6. As An Alternate, Brace Anchorage Connections To Structure May Be Employed Using Any Detail From Structural Connections Section "D" Series Details Where Assembly Design Value Meets Or Exceeds Brace Reaction.
7. For Trade Specific Bracing Installation Notes, Refer To Page 7.1.
8. Utilize Any "G" Series Vertical Support Connection Having A Design Value Equal To Or Greater Than The Corresponding "Rod Total Vertical Load". Center Rod Does Not Undergo Compression. Rod Stiffening of Center Rod Not Required.

REVIEWED FOR CODE COMPLIANCE
HCAI
OPM-0403
BY: William Staehlin
DATE: 01-26-2024
CALIFORNIA BUILDING CODE

REGISTERED PROFESSIONAL ENGINEER MARCIN WASAZNIK S-6612 STRUCTURAL STATE OF CALIFORNIA

ISAT
A Division of Tomarco Contractor Specialties
International Seismic Application Technology
14848 Northam Street, La Mirada, CA 90638
877-999-4728 (Toll Free) 714-523-0845 (Fax)
www.isatsb.com

Rev. 1
11/19/18
Page
C37-0.25-60
Inboard

RIGID BRACING REQUIREMENTS [7]

3-ROD TRAPEZED ELECTRICAL SYSTEMS (Conduit, Cable Tray, Bus Duct, Bus Way) — **MAXIMUM SEISMIC DESIGN FORCE = 0.50 G's**

Requires Use of ISAT Seismic Brackets. Use of Any Non-ISAT Bracket Voids Engineering. — *2013 California Building Code Compliant*

Maximum Trapeze Load (lbs/lf)	Max. Vertical Support Spacing (ft.)	Inboard [1, 8] Rod Total Vertical Load (lbs)	Min. [8] Vertical Support Rod Dia. (in.)	INBOARD LONGITUDINAL BRACING REQUIREMENTS: Max. [2] Brace Spacing (ft.)	Brace [3] Reaction P (lbs)	Min. Brace Assembly E - Pages	Min. Brace Anchorage [6]: Form Pour [4] Deck Page D1	Min. Brace Anchorage [6]: Metal [5] Deck Page D2
				5-Way Transverse, Longitudinal Brace Pattern (B22.4)				
11.0	10	126	3/8	40	108	R38AAEM306	N2	L2
25.0	10	287	1/2	40	245	R12AAEM306	N3	L3
35.0	10	402	1/2	40	344	R12AAEM406	N4	L4
50.0	10	574	1/2	40	491	R12AAEM406	N5	L5
65.0	10	746	1/2	40	638	R12AAEM406	N7	L7
				6-Way Transverse, Longitudinal Brace Pattern (B22.5)				
75.0	10	861	1/2	40	736	R12AAEM509	N8	L8
100.0	10	1,148	1/2	40	981	R12AAEM506	N10	L10
125.0	10	1,434	1/2	40	1,227	R12AAEM506	N13	L13
150.0	10	1,721	1/2	39	1,435	R12AAEM506	N15	L15
175.0	10	2,008	1/2	33	1,417	R12AAEM506	N15	L15
200.0	10	2,295	1/2	29	1,423	R12AAEM506	N15	L15
225.0	10	2,582	5/8	26	1,435	R58AAEM506	N15	L15

1. TVL = DL + Fv + ($0.2S_{DS}$/1.4 x Wp). All Terms Are Working Loads. Based On Eccentric Loading, 85% Of Total Load Allocated Per Inboard Rod.
2. Reductions In Actual Installed Brace Spacing Will Result In An Equal Percentage Reduction In Brace Reaction. As An Option When This Occurs ISAT May Substitute An Alternate Anchorage From Tables D1 or D2 Which Meets or Exceeds The Lowered Brace Reaction.
3. At Max. 30 Degree Brace Inclination.
4. Min. 3,000 psi NWC. Any "N Series" Connection May Be Utilized Having A Numeric Designation Equal To Or Higher Than That Shown.
5. Min. 3,000 psi NWC or LWC. Any "L Series" Connection May Be Utilized Having A Numeric Designation Equal To Or Higher Than That Shown.
6. As An Alternate, Brace Anchorage Connections To Structure May Be Employed Using Any Detail From Structural Connections Section "D" Series Details Where Assembly Design Value Meets Or Exceeds Brace Reaction.
7. For Trade Specific Bracing Installation Notes, Refer To Page 7.1.
8. Utilize Any "G" Series Vertical Support Connection Having A Design Value Equal To Or Greater Than The Corresponding "Rod Total Vertical Load". Center Rod Does Not Undergo Compression. Rod Stiffening of Center Rod Not Required.

REVIEWED FOR CODE COMPLIANCE
HCAi
OPM-0403
BY: William Staehlin
DATE: 01-26-2024
CALIFORNIA BUILDING CODE 2019

REGISTERED PROFESSIONAL ENGINEER MARCIN WASAZNIK S-6612 STRUCTURAL STATE OF CALIFORNIA

ISAT
A Division of Tomarco Contractor Specialties
International Seismic Application Technology
14848 Northam Street, La Mirada, CA 90638
877-999-4728 (Toll Free) 714-523-0845 (Fax)
www.isatsb.com

Rev. 1
11/19/18
Page
C37-0.5-30
Inboard

RIGID BRACING REQUIREMENTS [7]

3-ROD TRAPEZED ELECTRICAL SYSTEMS (Conduit, Cable Tray, Bus Duct, Bus Way) — **MAXIMUM SEISMIC DESIGN FORCE = 0.50 G's**

Requires Use of ISAT Seismic Brackets. Use of Any Non-ISAT Bracket Voids Engineering. — *2013 California Building Code Compliant*

Maximum Trapeze Load (lbs/lf)	Max. Vertical Support Spacing (ft.)	Inboard [1, 8] Rod Total Vertical Load (lbs)	Min. [8] Vertical Support Rod Dia. (in.)	INBOARD LONGITUDINAL BRACING REQUIREMENTS: Max. [2] Brace Spacing (ft.)	Brace [3] Reaction P (lbs)	Min. Brace Assembly E - Pages	Min. Brace Anchorage [6]: Form Pour [4] Deck Page D1	Min. Brace Anchorage [6]: Metal [5] Deck Page D2
				5-Way Transverse, Longitudinal Brace Pattern (B22.4)				
11.0	10	126	3/8	40	145	R38AAEM306	N2	L2
25.0	10	287	1/2	40	331	R12AAEM406	N4	L4
35.0	10	402	1/2	40	463	R12AAEM406	N5	L5
50.0	10	574	1/2	40	661	R12AAEM509	N7	L7
65.0	10	746	1/2	40	860	R12AAEM506	N9	L9
75.0	10	861	1/2	40	992	R12AAEM506	N10	L10
				6-Way Transverse, Longitudinal Brace Pattern (B22.5)				
100.0	10	1,148	1/2	40	1,322	R12AAEM506	N14	L14
125.0	10	1,434	1/2	40	1,653	R12AAEM606	N17	L17
150.0	10	1,721	1/2	40	1,984	R12AAEM606	N20	L20
175.0	10	2,008	1/2	39	2,256	R12BGB2P09	N23	L23
200.0	10	2,295	1/2	34	2,248	R12BGB2P09	N23	L23
225.0	10	2,582	5/8	33	2,455	R58DGB2P06	N25	L25

1. TVL = DL + Fv + ($0.2S_{DS}$/1.4 x Wp). All Terms Are Working Loads. Based On Eccentric Loading, 85% Of Total Load Allocated Per Inboard Rod.
2. Reductions In Actual Installed Brace Spacing Will Result In An Equal Percentage Reduction In Brace Reaction. As An Option When This Occurs ISAT May Substitute An Alternate Anchorage From Tables D1 or D2 Which Meets or Exceeds The Lowered Brace Reaction.
3. At Max. 50 Degree Brace Inclination.
4. Min. 3,000 psi NWC. Any "N Series" Connection May Be Utilized Having A Numeric Designation Equal To Or Higher Than That Shown.
5. Min. 3,000 psi NWC or LWC. Any "L Series" Connection May Be Utilized Having A Numeric Designation Equal To Or Higher Than That Shown.
6. As An Alternate, Brace Anchorage Connections To Structure May Be Employed Using Any Detail From Structural Connections Section "D" Series Details Where Assembly Design Value Meets Or Exceeds Brace Reaction.
7. For Trade Specific Bracing Installation Notes, Refer To Page 7.1.
8. Utilize Any "G" Series Vertical Support Connection Having A Design Value Equal To Or Greater Than The Corresponding "Rod Total Vertical Load". Center Rod Does Not Undergo Compression. Rod Stiffening of Center Rod Not Required.

REVIEWED FOR CODE COMPLIANCE
HCAI
OPM-0403
BY: William Staehlin
DATE: 01-26-2024
CALIFORNIA BUILDING CODE

REGISTERED PROFESSIONAL ENGINEER
MARCIN WASAZNIK
S 6612
STRUCTURAL
STATE OF CALIFORNIA

ISAT
A Division of Tomarco Contractor Specialties

International Seismic Application Technology
14848 Northam Street, La Mirada, CA 90638
877-999-4728 (Toll Free) 714-523-0845 (Fax)
www.isatsb.com

Rev. 1
11/19/18
Page
C37-0.5-45
Inboard

RIGID BRACING REQUIREMENTS [7]

3-ROD TRAPEZED ELECTRICAL SYSTEMS (Conduit, Cable Tray, Bus Duct, Bus Way) — **MAXIMUM SEISMIC DESIGN FORCE = 0.50 G's**

Requires Use of ISAT Seismic Brackets. Use of Any Non-ISAT Bracket Voids Engineering. — *2013 California Building Code Compliant*

Maximum Trapeze Load (lbs/lf)	Max. Vertical Support Spacing (ft.)	Inboard [1, 8] Rod Total Vertical Load (lbs)	Min. [8] Vertical Support Rod Dia. (in.)	INBOARD LONGITUDINAL BRACING REQUIREMENTS: Max. [2] Brace Spacing (ft.)	Brace [3] Reaction P (lbs)	Min. Brace Assembly E - Pages	Min. Brace Anchorage [6]: Form Pour [4] Deck Page D1	Min. Brace Anchorage [6]: Metal [5] Deck Page D2
				5-Way Transverse, Longitudinal Brace Pattern (B22.4)				
11.0	10	126	3/8	40	187	R38AAEM306	N2	L2
25.0	10	287	1/2	40	425	R12AAEM406	N5	L5
35.0	10	402	1/2	40	595	R12AAEM406	N6	L6
50.0	10	574	1/2	40	850	R12AAEM506	N9	L9
65.0	10	746	1/2	40	1,105	R12AAEM506	N12	L12
				6-Way Transverse, Longitudinal Brace Pattern (B22.5)				
75.0	10	861	1/2	40	1,275	R12AAEM506	N13	L13
100.0	10	1,148	1/2	40	1,700	R12AAEM606	N17	L17
125.0	10	1,434	1/2	40	2,125	R12AAB2P09	N22	L22
150.0	10	1,721	1/2	38	2,423	R12AAB2P06	N25	L25
175.0	10	2,008	1/2	33	2,454	R12AAB2P06	N25	L25
200.0	10	2,295	1/2	29	2,465	R12AAB2P06	N25	L25
225.0	10	2,582	5/8	25	2,391	R58AAB2P06	N24	L24

1. TVL = DL + Fv + ($0.2S_{DS}$/1.4 x Wp). All Terms Are Working Loads. Based On Eccentric Loading, 85% Of Total Load Allocated Per Inboard Rod.
2. Reductions In Actual Installed Brace Spacing Will Result In An Equal Percentage Reduction In Brace Reaction. As An Option When This Occurs ISAT May Substitute An Alternate Anchorage From Tables D1 or D2 Which Meets or Exceeds The Lowered Brace Reaction.
3. At Max. 60 Degree Brace Inclination.
4. Min. 3,000 psi NWC. Any "N Series" Connection May Be Utilized Having A Numeric Designation Equal To Or Higher Than That Shown.
5. Min. 3,000 psi NWC or LWC. Any "L Series" Connection May Be Utilized Having A Numeric Designation Equal To Or Higher Than That Shown.
6. As An Alternate, Brace Anchorage Connections To Structure May Be Employed Using Any Detail From Structural Connections Section "D" Series Details Where Assembly Design Value Meets Or Exceeds Brace Reaction.
7. For Trade Specific Bracing Installation Notes, Refer To Page 7.1.
8. Utilize Any "G" Series Vertical Support Connection Having A Design Value Equal To Or Greater Than The Corresponding "Rod Total Vertical Load". Center Rod Does Not Undergo Compression. Rod Stiffening of Center Rod Not Required.

REVIEWED FOR CODE COMPLIANCE
HCAI
OPM-0403
BY: William Staehlin
DATE: 01-26-2024
CALIFORNIA BUILDING CODE, 2022

REGISTERED PROFESSIONAL ENGINEER MARCIN WASAZNIK S-6612 STRUCTURAL STATE OF CALIFORNIA

ISAT
A Division of Tomarco Contractor Specialties
International Seismic Application Technology
14040 Northam Street, La Mirada, CA 90638
877-999-4728 (Toll Free) 714-523-0845 (Fax)
www.isatsb.com

Rev. 1
11/19/18
Page
C37-0.5-60
Inboard

RIGID BRACING REQUIREMENTS [7]

3-ROD TRAPEZED ELECTRICAL SYSTEMS (Conduit, Cable Tray, Bus Duct, Bus Way) — **MAXIMUM SEISMIC DESIGN FORCE = 0.75 G's**

Requires Use of ISAT Seismic Brackets. Use of Any Non-ISAT Bracket Voids Engineering. — *2013 California Building Code Compliant*

Maximum Trapeze Load (lbs/lf)	Max. Vertical Support Spacing (ft.)	Inboard [1, 8] Rod Total Vertical Load (lbs)	Min. [8] Vertical Support Rod Dia. (in.)	INBOARD LONGITUDINAL BRACING REQUIREMENTS: Max. [2] Brace Spacing (ft.)	Brace [3] Reaction P (lbs)	Min. Brace Assembly E - Pages	Min. Brace Anchorage [6]: Form Pour [4] Deck Page D1	Min. Brace Anchorage [6]: Metal [5] Deck Page D2
				5-Way Transverse, Longitudinal Brace Pattern (B22.4)				
11.0	10	126	3/8	40	162	R38AAEM306	N2	L2
25.0	10	287	1/2	40	368	R12AAEM406	N4	L4
35.0	10	402	1/2	40	515	R12AAEM406	N6	L6
				6-Way Transverse, Longitudinal Brace Pattern (B22.5)				
50.0	10	574	1/2	40	736	R12AAEM509	N8	L8
65.0	10	746	1/2	40	957	R12AAEM506	N10	L10
75.0	10	861	1/2	40	1,104	R12AAEM506	N12	L12
100.0	10	1,148	1/2	39	1,435	R12AAEM506	N15	L15
125.0	10	1,434	1/2	31	1,426	R12AAEM506	N15	L15
150.0	10	1,721	1/2	26	1,435	R12AAEM506	N15	L15
175.0	10	2,008	1/2	22	1,417	R12AAEM506	N15	L15
200.0	10	2,295	1/2	19	1,399	R12AAEM506	N14	L14
225.0	10	2,582	5/8	17	1,408	R58AAEM506	N15	L15

1. TVL = DL + Fv + ($0.2S_{DS}$/1.4 x Wp). All Terms Are Working Loads. Based On Eccentric Loading, 85% Of Total Load Allocated Per Inboard Rod.
2. Reductions In Actual Installed Brace Spacing Will Result In An Equal Percentage Reduction In Brace Reaction. As An Option When This Occurs ISAT May Substitute An Alternate Anchorage From Tables D1 or D2 Which Meets or Exceeds The Lowered Brace Reaction.
3. At Max. 30 Degree Brace Inclination.
4. Min. 3,000 psi NWC. Any "N Series" Connection May Be Utilized Having A Numeric Designation Equal To Or Higher Than That Shown.
5. Min. 3,000 psi NWC or LWC. Any "L Series" Connection May Be Utilized Having A Numeric Designation Equal To Or Higher Than That Shown.
6. As An Alternate, Brace Anchorage Connections To Structure May Be Employed Using Any Detail From Structural Connections Section "D" Series Details Where Assembly Design Value Meets Or Exceeds Brace Reaction.
7. For Trade Specific Bracing Installation Notes, Refer To Page 7.1.
8. Utilize Any "G" Series Vertical Support Connection Having A Design Value Equal To Or Greater Than The Corresponding "Rod Total Vertical Load". Center Rod Does Not Undergo Compression. Rod Stiffening of Center Rod Not Required.

REVIEWED FOR CODE COMPLIANCE
HCAI
OPM-0403
BY: William Staehlin
DATE: 01-26-2024
CALIFORNIA BUILDING CODE

REGISTERED PROFESSIONAL ENGINEER
MARCIN WASAZNIK
S-6612
STRUCTURAL
STATE OF CALIFORNIA

ISAT
A Division of Tomarco Contractor Specialties
International Seismic Application Technology
14848 Northam Street, La Mirada, CA 90638
877-999-4728 (Toll Free) 714-523-0845 (Fax)
www.isatsb.com

Rev. 1
11/19/18
Page
C37-0.75-30
Inboard

RIGID BRACING REQUIREMENTS [7]

3-ROD TRAPEZED ELECTRICAL SYSTEMS (Conduit, Cable Tray, Bus Duct, Bus Way) — **MAXIMUM SEISMIC DESIGN FORCE = 0.75 G's**

Requires Use of ISAT Seismic Brackets. Use of Any Non-ISAT Bracket Voids Engineering. — *2013 California Building Code Compliant*

Maximum Trapeze Load (lbs/lf)	Max. Vertical Support Spacing (ft.)	Inboard [1, 8] Rod Total Vertical Load (lbs)	Min. [8] Vertical Support Rod Dia. (in.)	INBOARD LONGITUDINAL BRACING REQUIREMENTS: Max. [2] Brace Spacing (ft.)	Brace [3] Reaction P (lbs)	Min. Brace Assembly E - Pages	Min. Brace Anchorage [6]: Form Pour [4] Deck Page D1	Min. Brace Anchorage [6]: Metal [5] Deck Page D2
				5-Way Transverse, Longitudinal Brace Pattern (B22.4)				
11.0	10	126	3/8	40	218	R38AAEM306	N3	L3
25.0	10	287	1/2	40	496	R12AAEM406	N5	L5
35.0	10	402	1/2	40	694	R12AAEM509	N7	L7
50.0	10	574	1/2	40	992	R12AAEM506	N10	L10
				6-Way Transverse, Longitudinal Brace Pattern (B22.5)				
65.0	10	746	1/2	40	1,289	R12AAEM506	N13	L13
75.0	10	861	1/2	40	1,488	R12AAEM606	N15	L15
100.0	10	1,148	1/2	40	1,984	R12AAEM606	N20	L20
125.0	10	1,434	1/2	36	2,231	R12BGB2P09	N23	L23
150.0	10	1,721	1/2	30	2,231	R12BGB2P09	N23	L23
175.0	10	2,008	1/2	26	2,256	R12BGB2P09	N23	L23
200.0	10	2,295	1/2	23	2,281	R12BGB2P09	N23	L23
225.0	10	2,582	5/8	22	2,455	R58DGB2P06	N25	L25

1. TVL = DL + Fv + ($0.2S_{DS}$/1.4 x Wp). All Terms Are Working Loads. Based On Eccentric Loading, 85% Of Total Load Allocated Per Inboard Rod.
2. Reductions In Actual Installed Brace Spacing Will Result In An Equal Percentage Reduction In Brace Reaction. As An Option When This Occurs ISAT May Substitute An Alternate Anchorage From Tables D1 or D2 Which Meets or Exceeds The Lowered Brace Reaction.
3. At Max. 50 Degree Brace Inclination.
4. Min. 3,000 psi NWC. Any "N Series" Connection May Be Utilized Having A Numeric Designation Equal To Or Higher Than That Shown.
5. Min. 3,000 psi NWC or LWC. Any "L Series" Connection May Be Utilized Having A Numeric Designation Equal To Or Higher Than That Shown.
6. As An Alternate, Brace Anchorage Connections To Structure May Be Employed Using Any Detail From Structural Connections Section "D" Series Details Where Assembly Design Value Meets Or Exceeds Brace Reaction.
7. For Trade Specific Bracing Installation Notes, Refer To Page 7.1.
8. Utilize Any "G" Series Vertical Support Connection Having A Design Value Equal To Or Greater Than The Corresponding "Rod Total Vertical Load". Center Rod Does Not Undergo Compression. Rod Stiffening of Center Rod Not Required.

REVIEWED FOR CODE COMPLIANCE
HCAI
OPM-0403
BY: William Staehlin
DATE: 01-26-2024
CALIFORNIA BUILDING CODE

REGISTERED PROFESSIONAL ENGINEER MARCIN WASAZNIK S-6612 STRUCTURAL STATE OF CALIFORNIA

ISAT
A Division of Tomarco Contractor Specialties
International Seismic Application Technology
14848 Northam Street, La Mirada, CA 90638
877-999-4728 (Toll Free) 714-523-0845 (Fax)
www.isatsb.com

Rev. 1
11/19/18
Page
C37-0.75-45
Inboard

RIGID BRACING REQUIREMENTS [7]

3-ROD TRAPEZED ELECTRICAL SYSTEMS (Conduit, Cable Tray, Bus Duct, Bus Way) — **MAXIMUM SEISMIC DESIGN FORCE = 0.75 G's**

Requires Use of ISAT Seismic Brackets. Use of Any Non-ISAT Bracket Voids Engineering. — *2013 California Building Code Compliant*

Maximum Trapeze Load (lbs/lf)	Max. Vertical Support Spacing (ft.)	Inboard [1, 8] Rod Total Vertical Load (lbs)	Min. [8] Vertical Support Rod Dia. (in.)	INBOARD LONGITUDINAL BRACING REQUIREMENTS: Max. [2] Brace Spacing (ft.)	Brace [3] Reaction P (lbs)	Min. Brace Assembly E - Pages	Min. Brace Anchorage [6]: Form Pour [4] Deck Page D1	Min. Brace Anchorage [6]: Metal [5] Deck Page D2
				5-Way Transverse, Longitudinal Brace Pattern (B22.4)				
11.0	10	126	3/8	40	281	R38AAEM306	N3	L3
25.0	10	287	1/2	40	638	R12AAEM406	N7	L7
35.0	10	402	1/2	40	893	R12AAEM506	N9	L9
				6-Way Transverse, Longitudinal Brace Pattern (B22.5)				
50.0	10	574	1/2	40	1,275	R12AAEM506	N13	L13
65.0	10	746	1/2	40	1,658	R12AAEM606	N17	L17
75.0	10	861	1/2	40	1,913	R12AAEM606	N20	L20
100.0	10	1,148	1/2	38	2,423	R12AAB2P06	N25	L25
125.0	10	1,434	1/2	31	2,470	R12AAB2P06	N25	L25
150.0	10	1,721	1/2	25	2,391	R12AAB2P06	N24	L24
175.0	10	2,008	1/2	22	2,454	R12AAB2P06	N25	L25
200.0	10	2,295	1/2	19	2,423	R12AAB2P06	N25	L25
225.0	10	2,582	5/8	17	2,438	R58AAB2P06	N25	L25

1. TVL = DL + Fv + ($0.2S_{DS}$/1.4 x Wp). All Terms Are Working Loads. Based On Eccentric Loading, 85% Of Total Load Allocated Per Inboard Rod.
2. Reductions In Actual Installed Brace Spacing Will Result In An Equal Percentage Reduction In Brace Reaction. As An Option When This Occurs ISAT May Substitute An Alternate Anchorage From Tables D1 or D2 Which Meets or Exceeds The Lowered Brace Reaction.
3. At Max. 60 Degree Brace Inclination.
4. Min. 3,000 psi NWC. Any "N Series" Connection May Be Utilized Having A Numeric Designation Equal To Or Higher Than That Shown.
5. Min. 3,000 psi NWC or LWC. Any "L Series" Connection May Be Utilized Having A Numeric Designation Equal To Or Higher Than That Shown.
6. As An Alternate, Brace Anchorage Connections To Structure May Be Employed Using Any Detail From Structural Connections Section "D" Series Details Where Assembly Design Value Meets Or Exceeds Brace Reaction.
7. For Trade Specific Bracing Installation Notes, Refer To Page 7.1.
8. Utilize Any "G" Series Vertical Support Connection Having A Design Value Equal To Or Greater Than The Corresponding "Rod Total Vertical Load". Center Rod Does Not Undergo Compression. Rod Stiffening of Center Rod Not Required.

REVIEWED FOR CODE COMPLIANCE
HCAI
OPM-0403
BY: William Staehlin
DATE: 01-26-2024
CALIFORNIA BUILDING CODE

REGISTERED PROFESSIONAL ENGINEER MARCIN WASAZNIK S 6612 STRUCTURAL STATE OF CALIFORNIA

ISAT
A Division of Tomarco Contractor Specialties

International Seismic Application Technology
14848 Northam Street, La Mirada, CA 90638
877-999-4728 (Toll Free) 714-523-0845 (Fax)
www.isatsb.com

Rev. 1
11/19/18
Page
C37-0.75-60
Inboard

RIGID BRACING REQUIREMENTS [7]

3-ROD TRAPEZED ELECTRICAL SYSTEMS (Conduit, Cable Tray, Bus Duct, Bus Way) — **MAXIMUM SEISMIC DESIGN FORCE = 1.00 G's**

Requires Use of ISAT Seismic Brackets. Use of Any Non-ISAT Bracket Voids Engineering. — *2013 California Building Code Compliant*

Maximum Trapeze Load (lbs/lf)	Max. Vertical Support Spacing (ft.)	Inboard [1, 8] Rod Total Vertical Load (lbs)	Min. [8] Vertical Support Rod Dia. (in.)	INBOARD LONGITUDINAL BRACING REQUIREMENTS: Max. [2] Brace Spacing (ft.)	Brace [3] Reaction P (lbs)	Min. Brace Assembly E - Pages	Min. Brace Anchorage [6] Form Pour [4] Deck Page D1	Min. Brace Anchorage [6] Metal [5] Deck Page D2
				5-Way Transverse, Longitudinal Brace Pattern (B22.4)				
11.0	10	126	3/8	40	216	R38AAEM306	N3	L3
25.0	10	287	1/2	40	491	R12AAEM406	N5	L5
35.0	10	402	1/2	40	687	R12AAEM509	N7	L7
				6-Way Transverse, Longitudinal Brace Pattern (B22.5)				
50.0	10	574	1/2	40	981	R12AAEM506	N10	L10
65.0	10	746	1/2	40	1,276	R12AAEM506	N13	L13
75.0	10	861	1/2	39	1,435	R12AAEM506	N15	L15
100.0	10	1,148	1/2	29	1,423	R12AAEM506	N15	L15
125.0	10	1,434	1/2	23	1,411	R12AAEM506	N15	L15
150.0	10	1,721	1/2	19	1,399	R12AAEM506	N14	L14
175.0	10	2,008	1/2	16	1,374	R12AAEM506	N14	L14
200.0	10	2,295	1/2	14	1,374	R12AAEM506	N14	L14
225.0	10	2,582	5/8	13	1,435	R58AAEM506	N15	L15

1. TVL = DL + Fv + ($0.2S_{DS}$/1.4 x Wp). All Terms Are Working Loads. Based On Eccentric Loading, 85% Of Total Load Allocated Per Inboard Rod.
2. Reductions In Actual Installed Brace Spacing Will Result In An Equal Percentage Reduction In Brace Reaction. As An Option When This Occurs ISAT May Substitute An Alternate Anchorage From Tables D1 or D2 Which Meets or Exceeds The Lowered Brace Reaction.
3. At Max. 30 Degree Brace Inclination.
4. Min. 3,000 psi NWC. Any "N Series" Connection May Be Utilized Having A Numeric Designation Equal To Or Higher Than That Shown.
5. Min. 3,000 psi NWC or LWC. Any "L Series" Connection May Be Utilized Having A Numeric Designation Equal To Or Higher Than That Shown.
6. As An Alternate, Brace Anchorage Connections To Structure May Be Employed Using Any Detail From Structural Connections Section "D" Series Details Where Assembly Design Value Meets Or Exceeds Brace Reaction.
7. For Trade Specific Bracing Installation Notes, Refer To Page 7.1.
8. Utilize Any "G" Series Vertical Support Connection Having A Design Value Equal To Or Greater Than The Corresponding "Rod Total Vertical Load". Center Rod Does Not Undergo Compression. Rod Stiffening of Center Rod Not Required.

REVIEWED FOR CODE COMPLIANCE
HCAI
OPM-0403
BY: William Staehlin
DATE: 01/26/2024
CALIFORNIA BUILDING CODES

REGISTERED PROFESSIONAL ENGINEER MARCIN WASAZNIK S 6612 STRUCTURAL STATE OF CALIFORNIA

ISAT
A Division of Tomarco Contractor Specialties
International Seismic Application Technology
14848 Northam Street, La Mirada, CA 90638
877-999-4728 (Toll Free) 714-523-0845 (Fax)
www.isatsb.com

Rev. 1
11/19/18
Page
C37-1-30
Inboard

RIGID BRACING REQUIREMENTS [7]

3-ROD TRAPEZED ELECTRICAL SYSTEMS (Conduit, Cable Tray, Bus Duct, Bus Way) — **MAXIMUM SEISMIC DESIGN FORCE = 1.00 G's**

Requires Use of ISAT Seismic Brackets. Use of Any Non-ISAT Bracket Voids Engineering. — *2013 California Building Code Compliant*

Maximum Trapeze Load (lbs/lf)	Max. Vertical Support Spacing (ft.)	Inboard [1, 8] Rod Total Vertical Load (lbs)	Min. [8] Vertical Support Rod Dia. (in.)	INBOARD LONGITUDINAL BRACING REQUIREMENTS: Max. [2] Brace Spacing (ft.)	Brace [3] Reaction P (lbs)	Min. Brace Assembly E - Pages	Min. Brace Anchorage [6]: Form Pour [4] Deck Page D1	Min. Brace Anchorage [6]: Metal [5] Deck Page D2
				5-Way Transverse, Longitudinal Brace Pattern (B22.4)				
11.0	10	126	3/8	40	291	R38AAEM306	N3	L3
25.0	10	287	1/2	40	661	R12AAEM509	N7	L7
35.0	10	402	1/2	40	926	R12AAEM506	N10	L10
				6-Way Transverse, Longitudinal Brace Pattern (B22.5)				
50.0	10	574	1/2	40	1,322	R12AAEM506	N14	L14
65.0	10	746	1/2	40	1,719	R12AAEM606	N18	L18
75.0	10	861	1/2	40	1,984	R12AAEM606	N20	L20
100.0	10	1,148	1/2	34	2,248	R12BGB2P09	N23	L23
125.0	10	1,434	1/2	27	2,231	R12BGB2P09	N23	L23
150.0	10	1,721	1/2	23	2,281	R12BGB2P09	N23	L23
175.0	10	2,008	1/2	19	2,198	R12BGB2P09	N22	L22
200.0	10	2,295	1/2	17	2,248	R12BGB2P09	N23	L23
225.0	10	2,582	5/8	16	2,380	R58DGB2P09	N24	L24

1. TVL = DL + Fv + ($0.2S_{DS}$/1.4 x Wp). All Terms Are Working Loads. Based On Eccentric Loading, 85% Of Total Load Allocated Per Inboard Rod.
2. Reductions In Actual Installed Brace Spacing Will Result In An Equal Percentage Reduction In Brace Reaction. As An Option When This Occurs ISAT May Substitute An Alternate Anchorage From Tables D1 or D2 Which Meets or Exceeds The Lowered Brace Reaction.
3. At Max. 50 Degree Brace Inclination.
4. Min. 3,000 psi NWC. Any "N Series" Connection May Be Utilized Having A Numeric Designation Equal To Or Higher Than That Shown.
5. Min. 3,000 psi NWC or LWC. Any "L Series" Connection May Be Utilized Having A Numeric Designation Equal To Or Higher Than That Shown.
6. As An Alternate, Brace Anchorage Connections To Structure May Be Employed Using Any Detail From Structural Connections Section "D" Series Details Where Assembly Design Value Meets Or Exceeds Brace Reaction.
7. For Trade Specific Bracing Installation Notes, Refer To Page 7.1.
8. Utilize Any "G" Series Vertical Support Connection Having A Design Value Equal To Or Greater Than The Corresponding "Rod Total Vertical Load". Center Rod Does Not Undergo Compression. Rod Stiffening of Center Rod Not Required.

REVIEWED FOR CODE COMPLIANCE
HCAI
OPM-0403
BY: William Staehlin
DATE: 01-26-2024
CALIFORNIA BUILDING CODES

REGISTERED PROFESSIONAL ENGINEER MARCIN WASAZNIK S 6612 STRUCTURAL STATE OF CALIFORNIA

ISAT
A Division of Tomarco Contractor Specialties
International Seismic Application Technology
14848 Northam Street, La Mirada, CA 90638
877-999-4728 (Toll Free) 714-523-0845 (Fax)
www.isatsb.com

Rev. 1
11/19/18
Page
C37-1-45
Inboard

RIGID BRACING REQUIREMENTS [7]

3-ROD TRAPEZED ELECTRICAL SYSTEMS (Conduit, Cable Tray, Bus Duct, Bus Way) — **MAXIMUM SEISMIC DESIGN FORCE = 1.00 G's**

Requires Use of ISAT Seismic Brackets. Use of Any Non-ISAT Bracket Voids Engineering. — *2013 California Building Code Compliant*

Maximum Trapeze Load (lbs/lf)	Max. Vertical Support Spacing (ft.)	Inboard [1, 8] Rod Total Vertical Load (lbs)	Min. [8] Vertical Support Rod Dia. (in.)	INBOARD LONGITUDINAL BRACING REQUIREMENTS: Max. [2] Brace Spacing (ft.)	Brace [3] Reaction P (lbs)	Min. Brace Assembly E - Pages	Min. Brace Anchorage [6]: Form Pour [4] Deck Page D1	Min. Brace Anchorage [6]: Metal [5] Deck Page D2
				5-Way Transverse, Longitudinal Brace Pattern (B22.4)				
11.0	10	126	3/8	40	374	R38AAEM406	N4	L4
25.0	10	287	1/2	40	850	R12AAEM506	N9	L9
35.0	10	402	1/2	40	1,190	R12AAEM506	N12	L12
				6-Way Transverse, Longitudinal Brace Pattern (B22.5)				
50.0	10	574	1/2	40	1,700	R12AAEM606	N17	L17
65.0	10	746	1/2	40	2,210	R12AAB2P09	N23	L23
75.0	10	861	1/2	38	2,423	R12AAB2P06	N25	L25
100.0	10	1,148	1/2	29	2,465	R12AAB2P06	N25	L25
125.0	10	1,434	1/2	23	2,444	R12AAB2P06	N25	L25
150.0	10	1,721	1/2	19	2,423	R12AAB2P06	N25	L25
175.0	10	2,008	1/2	16	2,380	R12AAB2P09	N24	L24
200.0	10	2,295	1/2	14	2,380	R12AAB2P09	N24	L24
225.0	10	2,582	5/8	12	2,295	R58AAB2P09	N23	L23

1. TVL = DL + Fv + ($0.2S_{DS}$/1.4 x Wp). All Terms Are Working Loads. Based On Eccentric Loading, 85% Of Total Load Allocated Per Inboard Rod.
2. Reductions In Actual Installed Brace Spacing Will Result In An Equal Percentage Reduction In Brace Reaction. As An Option When This Occurs ISAT May Substitute An Alternate Anchorage From Tables D1 or D2 Which Meets or Exceeds The Lowered Brace Reaction.
3. At Max. 60 Degree Brace Inclination.
4. Min. 3,000 psi NWC. Any "N Series" Connection May Be Utilized Having A Numeric Designation Equal To Or Higher Than That Shown.
5. Min. 3,000 psi NWC or LWC. Any "L Series" Connection May Be Utilized Having A Numeric Designation Equal To Or Higher Than That Shown.
6. As An Alternate, Brace Anchorage Connections To Structure May Be Employed Using Any Detail From Structural Connections Section "D" Series Details Where Assembly Design Value Meets Or Exceeds Brace Reaction.
7. For Trade Specific Bracing Installation Notes, Refer To Page 7.1.
8. Utilize Any "G" Series Vertical Support Connection Having A Design Value Equal To Or Greater Than The Corresponding "Rod Total Vertical Load". Center Rod Does Not Undergo Compression. Rod Stiffening of Center Rod Not Required.

REVIEWED FOR CODE COMPLIANCE
HCAI
OPM-0403
BY: William Staehlin
DATE: 01-26-2024
CALIFORNIA BUILDING CODE, 2022

REGISTERED PROFESSIONAL ENGINEER MARCIN WASAZNIK S-6612 STRUCTURAL STATE OF CALIFORNIA

ISAT
A Division of Tomarco Contractor Specialties
International Seismic Application Technology
14040 Northam Street, La Mirada, CA 90638
877-999-4728 (Toll Free) 714-523-0845 (Fax)
www.isatsb.com

Rev. 1
11/19/18
Page
C37-1-60
Inboard

RIGID BRACING REQUIREMENTS [7]

3-ROD TRAPEZED ELECTRICAL SYSTEMS (Conduit, Cable Tray, Bus Duct, Bus Way) — **MAXIMUM SEISMIC DESIGN FORCE = 0.25 G's**

Requires Use of ISAT Seismic Brackets. Use of Any Non-ISAT Bracket Voids Engineering. — *2013 California Building Code Compliant*

Maximum Trapeze Load (lbs/lf)	Max. Vertical Support Spacing (ft.)	Outboard [1] Rod Total Vertical Load (lbs)	Min. [8] Vertical Support Rod Dia. (in.)	OUTBOARD TRANSVERSE BRACING REQUIREMENTS					OUTBOARD LONGITUDINAL BRACING REQUIREMENTS				
				Max. [2] Brace Spacing (ft.)	Brace [3] Reaction P (lbs)	Min. Brace Assembly E - Pages	Min. Brace Anchorage [6] Form Pour [4] Deck Page D1	Min. Brace Anchorage [6] Metal [5] Deck Page D2	Max. [2] Brace Spacing (ft.)	Brace [3] Reaction P (lbs)	Min. Brace Assembly E - Pages	Min. Brace Anchorage [6] Form Pour [4] Deck Page D1	Min. Brace Anchorage [6] Metal [5] Deck Page D2
				1-Way Transverse Brace Pattern (B22.0, B22.2, B22.4)					5-Way Transverse, Longitudinal Brace Pattern (B22.4)				
11.0	10	108	3/8	40	127	R38AAEM306	N2	L2	80	64	R38AAEM306	N1	L1
25.0	10	246	1/2	40	289	R12AAEM306	N3	L3	80	144	R12AAEM306	N2	L2
35.0	10	344	1/2	40	404	R12AAEM406	N5	L5	80	202	R12AAEM306	N3	L3
50.0	10	491	1/2	40	577	R12AAEM406	N6	L6	80	289	R12AAEM306	N3	L3
65.0	10	639	1/2	40	751	R12AAEM509	N8	L8	80	375	R12AAEM406	N4	L4
75.0	10	737	1/2	40	866	R12AAEM506	N9	L9	80	433	R12AAEM406	N5	L5
100.0	10	983	1/2	40	1,155	R12AAEM506	N12	L12	80	577	R12AAEM406	N6	L6
125.0	10	1,229	1/2	40	1,443	R12AAEM506	N15	L15	80	722	R12AAEM509	N8	L8
				OUTBOARD TRANS., LONGITUDINAL BRACING REQUIREMENTS [9]									
				6-Way Transverse, Longitudinal Brace Pattern (B22.5)									
150.0	10	990	1/2	40	866	R12AAEM506	N9	L9					
175.0	10	1,155	1/2	40	1,010	R12AAEM506	N11	L11					
200.0	10	1,320	1/2	40	1,155	R12AAEM506	N12	L12					
225.0	10	1,486	1/2	40	1,299	R12AAEM506	N13	L13					

1. TVL = DL + Fv + ($0.2S_{DS}$/1.4 x Wp). All Terms Are Working Loads. Based On Eccentric Loading, 25% Of Total Load Allocated Per Outboard Rod.
2. Reductions In Actual Installed Brace Spacing Will Result In An Equal Percentage Reduction In Brace Reaction. As An Option When This Occurs ISAT May Substitute An Alternate Anchorage From Tables D1 or D2 Which Meets or Exceeds The Lowered Brace Reaction.
3. At Max. 30 Degree Brace Inclination.
4. Min. 3,000 psi NWC. Any "N Series" Connection May Be Utilized Having A Numeric Designation Equal To Or Higher Than That Shown.
5. Min. 3,000 psi NWC or LWC. Any "L Series" Connection May Be Utilized Having A Numeric Designation Equal To Or Higher Than That Shown.
6. As An Alternate, Brace Anchorage Connections To Structure May Be Employed Using Any Detail From Structural Connections Section "D" Series Details Where Assembly Design Value Meets Or Exceeds Brace Reaction.
7. For Trade Specific Bracing Installation Notes, Refer To Page 7.1.
8. Utilize Any "G" Series Vertical Support Connection Having A Design Value Equal To Or Greater Than The Corresponding "Rod Total Vertical Load".

REVIEWED FOR CODE COMPLIANCE
OPM-0403
By: William Staehlin
DATE: 01-26-2024
CALIFORNIA BUILDING CODE, 2019

REGISTERED PROFESSIONAL ENGINEER MARCIN WASAZNIK S 6612 STRUCTURAL STATE OF CALIFORNIA

ISAT
A Division of Tomarco Contractor Specialties
International Seismic Application Technology
14848 Northam Street, La Mirada, CA 90638
877-999-4728 (Toll Free) 714-523-0845 (Fax)
www.isatsb.com

Rev. 0
8/03/18
Page
C37 -0.25-30
Outboard

RIGID BRACING REQUIREMENTS [7]

3-ROD TRAPEZED ELECTRICAL SYSTEMS (Conduit, Cable Tray, Bus Duct, Bus Way) — **MAXIMUM SEISMIC DESIGN FORCE = 0.25 G's**

Requires Use of ISAT Seismic Brackets. Use of Any Non-ISAT Bracket Voids Engineering. — *2013 California Building Code Compliant*

Maximum Trapeze Load (lbs/lf)	Max. Vertical Support Spacing (ft.)	Outboard [1] Rod Total Vertical Load (lbs)	Min. [8] Vertical Support Rod Dia. (in.)	OUTBOARD TRANSVERSE BRACING REQUIREMENTS					OUTBOARD LONGITUDINAL BRACING REQUIREMENTS				
				Max. [2] Brace Spacing (ft.)	Brace [3] Reaction P (lbs)	Min. Brace Assembly E - Pages	Min. Brace Anchorage [6] Form Pour [4] Deck Page D1	Min. Brace Anchorage [6] Metal [5] Deck Page D2	Max. [2] Brace Spacing (ft.)	Brace [3] Reaction P (lbs)	Min. Brace Assembly E - Pages	Min. Brace Anchorage [6] Form Pour [4] Deck Page D1	Min. Brace Anchorage [6] Metal [5] Deck Page D2
				1-Way Transverse Brace Pattern (B22.0, B22.2, B22.4)					5-Way Transverse, Longitudinal Brace Pattern (B22.4)				
11.0	10	184	3/8	40	171	R38AAEM306	N2	L2	80	86	R38AAEM306	N1	L1
25.0	10	417	1/2	40	389	R12AAEM406	N4	L4	80	194	R12AAEM306	N2	L2
35.0	10	584	1/2	40	545	R12AAEM406	N6	L6	80	272	R12AAEM306	N3	L3
50.0	10	835	1/2	40	778	R12AAEM509	N8	L8	80	389	R12AAEM406	N4	L4
65.0	10	1,085	1/2	40	1,011	R12AAEM506	N11	L11	80	506	R12AAEM406	N6	L6
75.0	10	1,252	1/2	40	1,167	R12AAEM506	N12	L12	80	583	R12AAEM406	N6	L6
100.0	10	1,670	5/8	40	1,556	R58AAEM606	N16	L16	80	778	R58AAEM509	N8	L8
125.0	10	2,087	3/4	40	1,945	R34DGB2P09	N20	L20	80	972	R34CFB1P06	N10	L10
				OUTBOARD TRANS., LONGITUDINAL BRACING REQUIREMENTS [9]									
				6-Way Transverse, Longitudinal Brace Pattern (B22.5)									
150.0	10	1,506	1/2	40	1,167	R12AAEM506	N12	L12					
175.0	10	1,756	5/8	40	1,361	R58AAEM506	N14	L14					
200.0	10	2,007	5/8	40	1,556	R58AAEM606	N16	L16					
225.0	10	2,258	3/4	40	1,750	R34DGB2P09	N18	L18					

1. TVL = DL + Fv + ($0.2S_{DS}$/1.4 x Wp). All Terms Are Working Loads. Based On Eccentric Loading, 25% Of Total Load Allocated Per Outboard Rod.
2. Reductions In Actual Installed Brace Spacing Will Result In An Equal Percentage Reduction In Brace Reaction. As An Option When This Occurs ISAT May Substitute An Alternate Anchorage From Tables D1 or D2 Which Meets or Exceeds The Lowered Brace Reaction.
3. At Max. 50 Degree Brace Inclination.
4. Min. 3,000 psi NWC. Any "N Series" Connection May Be Utilized Having A Numeric Designation Equal To Or Higher Than That Shown.
5. Min. 3,000 psi NWC or LWC. Any "L Series" Connection May Be Utilized Having A Numeric Designation Equal To Or Higher Than That Shown.
6. As An Alternate, Brace Anchorage Connections To Structure May Be Employed Using Any Detail From Structural Connections Section "D" Series Details Where Assembly Design Value Meets Or Exceeds Brace Reaction.
7. For Trade Specific Bracing Installation Notes, Refer To Page 7.1.
8. Utilize Any "G" Series Vertical Support Connection Having A Design Value Equal To Or Greater Than The Corresponding "Rod Total Vertical Load".

REVIEWED FOR CODE COMPLIANCE
OPM-0403
BY: William Staehlin
DATE: 01-26-2024
CALIFORNIA BUILDING CODE, 2019

REGISTERED PROFESSIONAL ENGINEER MARCIN WASAZNIK S-6612 STRUCTURAL STATE OF CALIFORNIA

ISAT
A Division of Tomarco Contractor Specialties
International Seismic Application Technology
14848 Northam Street, La Mirada, CA 90638
877-999-4728 (Toll Free) 714-523-0845 (Fax)
www.isatsb.com

Rev. 0
8/03/18
Page
C37 -0.25-45
Outboard

RIGID BRACING REQUIREMENTS [7]

3-ROD TRAPEZED ELECTRICAL SYSTEMS (Conduit, Cable Tray, Bus Duct, Bus Way) — **MAXIMUM SEISMIC DESIGN FORCE = 0.25 G's**

Requires Use of ISAT Seismic Brackets. Use of Any Non-ISAT Bracket Voids Engineering. — *2013 California Building Code Compliant*

Maximum Trapeze Load (lbs/lf)	Max. Vertical Support Spacing (ft.)	Outboard [1] Rod Total Vertical Load (lbs)	Min. [8] Vertical Support Rod Dia. (in.)	OUTBOARD TRANSVERSE BRACING REQUIREMENTS					OUTBOARD LONGITUDINAL BRACING REQUIREMENTS				
				Max. [2] Brace Spacing (ft.)	Brace [3] Reaction P (lbs)	Min. Brace Assembly E - Pages	Min. Brace Anchorage [6] Form Pour [4] Deck Page D1	Min. Brace Anchorage [6] Metal [5] Deck Page D2	Max. [2] Brace Spacing (ft.)	Brace [3] Reaction P (lbs)	Min. Brace Assembly E - Pages	Min. Brace Anchorage [6] Form Pour [4] Deck Page D1	Min. Brace Anchorage [6] Metal [5] Deck Page D2
				1-Way Transverse Brace Pattern (B22.0, B22.2, B22.4)					5-Way Transverse, Longitudinal Brace Pattern (B22.4)				
11.0	10	250	3/8	40	220	R38AAEM306	N3	L3	80	110	R38AAEM306	N2	L2
25.0	10	568	1/2	40	500	R12AAEM406	N5	L5	80	250	R12AAEM306	N3	L3
35.0	10	796	1/2	40	700	R12AAEM509	N7	L7	80	350	R12AAEM406	N4	L4
50.0	10	1,137	1/2	40	1,000	R12AAEM506	N10	L10	80	500	R12AAEM406	N5	L5
65.0	10	1,478	5/8	40	1,300	R58AAEM506	N13	L13	80	650	R58AAEM406	N7	L7
				OUTBOARD TRANS., LONGITUDINAL BRACING REQUIREMENTS [9]									
				6-Way Transverse, Longitudinal Brace Pattern (B22.5)									
75.0	10	979	1/2	40	750	R12AAEM509	N8	L8					
100.0	10	1,306	1/2	40	1,000	R12AAEM506	N10	L10					
125.0	10	1,632	5/8	40	1,250	R58AAEM506	N13	L13					
150.0	10	1,922	5/8	39	1,463	R58AAEM606	N15	L15					
175.0	10	1,989	5/8	33	1,444	R58AAEM506	N15	L15					
200.0	10	2,079	5/8	29	1,450	R58AAEM506	N15	L15					
225.0	10	2,175	5/8	26	1,463	R58AAEM606	N15	L15					

1. TVL = DL + Fv + ($0.2S_{DS}$/1.4 x Wp). All Terms Are Working Loads. Based On Eccentric Loading, 25% Of Total Load Allocated Per Outboard Rod.
2. Reductions In Actual Installed Brace Spacing Will Result In An Equal Percentage Reduction In Brace Reaction. As An Option When This Occurs ISAT May Substitute An Alternate Anchorage From Tables D1 or D2 Which Meets or Exceeds The Lowered Brace Reaction.
3. At Max. 60 Degree Brace Inclination.
4. Min. 3,000 psi NWC. Any "N Series" Connection May Be Utilized Having A Numeric Designation Equal To Or Higher Than That Shown.
5. Min. 3,000 psi NWC or LWC. Any "L Series" Connection May Be Utilized Having A Numeric Designation Equal To Or Higher Than That Shown.
6. As An Alternate, Brace Anchorage Connections To Structure May Be Employed Using Any Detail From Structural Connections Section "D" Series Details Where Assembly Design Value Meets Or Exceeds Brace Reaction.
7. For Trade Specific Bracing Installation Notes, Refer To Page 7.1.
8. Utilize Any "G" Series Vertical Support Connection Having A Design Value Equal To Or Greater Than The Corresponding "Rod Total Vertical Load".

REVIEWED FOR CODE COMPLIANCE
OPM-0403
BY: William Staehlin
DATE: 01-26-2024
CALIFORNIA BUILDING CODE 2022

REGISTERED PROFESSIONAL ENGINEER MARCIN WASAZNIK S 6612 STRUCTURAL STATE OF CALIFORNIA

ISAT
A Division of Tomarco Contractor Specialties
International Seismic Application Technology
14848 Northam Street, La Mirada, CA 90638
877-999-4728 (Toll Free) 714-523-0845 (Fax)
www.isatsb.com

Rev. 0
8/03/18
Page
C37 -0.25-60
Outboard

RIGID BRACING REQUIREMENTS [7]

3-ROD TRAPEZED ELECTRICAL SYSTEMS (Conduit, Cable Tray, Bus Duct, Bus Way) — **MAXIMUM SEISMIC DESIGN FORCE = 0.50 G's**

Requires Use of ISAT Seismic Brackets. Use of Any Non-ISAT Bracket Voids Engineering. — *2013 California Building Code Compliant*

Maximum Trapeze Load (lbs/lf)	Max. Vertical Support Spacing (ft.)	Outboard [1] Rod Total Vertical Load (lbs)	Min. [8] Vertical Support Rod Dia. (in.)	OUTBOARD TRANSVERSE BRACING REQUIREMENTS					OUTBOARD LONGITUDINAL BRACING REQUIREMENTS				
				Max. [2] Brace Spacing (ft.)	Brace [3] Reaction P (lbs)	Min. Brace Assembly E - Pages	Min. Brace Anchorage [6] Form Pour [4] Deck Page D1	Min. Brace Anchorage [6] Metal [5] Deck Page D2	Max. [2] Brace Spacing (ft.)	Brace [3] Reaction P (lbs)	Min. Brace Assembly E - Pages	Min. Brace Anchorage [6] Form Pour [4] Deck Page D1	Min. Brace Anchorage [6] Metal [5] Deck Page D2
				1-Way Transverse Brace Pattern (B22.0, B22.2, B22.4)					5-Way Transverse, Longitudinal Brace Pattern (B22.4)				
11.0	10	179	3/8	40	254	R38AAEM306	N3	L3	80	127	R38AAEM306	N2	L2
25.0	10	407	1/2	40	577	R12AAEM406	N6	L6	80	289	R12AAEM306	N3	L3
35.0	10	570	1/2	40	808	R12AAEM506	N9	L9	80	404	R12AAEM406	N5	L5
50.0	10	814	1/2	40	1,155	R12AAEM506	N12	L12	80	577	R12AAEM406	N6	L6
				OUTBOARD TRANS., LONGITUDINAL BRACING REQUIREMENTS [9]									
				6-Way Transverse, Longitudinal Brace Pattern (B22.5)									
65.0	10	639	1/2	40	751	R12AAEM509	N8	L8					
75.0	10	737	1/2	40	866	R12AAEM506	N9	L9					
100.0	10	983	1/2	40	1,155	R12AAEM506	N12	L12					
125.0	10	1,229	1/2	40	1,443	R12AAEM506	N15	L15					
150.0	10	1,305	1/2	33	1,429	R12AAEM506	N15	L15					
175.0	10	1,381	1/2	28	1,415	R12AAEM506	N15	L15					
200.0	10	1,482	1/2	25	1,443	R12AAEM506	N15	L15					
225.0	10	1,558	1/2	22	1,429	R12AAEM506	N15	L15					

1. TVL = DL + Fv + ($0.2S_{DS}$/1.4 x Wp). All Terms Are Working Loads. Based On Eccentric Loading, 25% Of Total Load Allocated Per Outboard Rod.
2. Reductions In Actual Installed Brace Spacing Will Result In An Equal Percentage Reduction In Brace Reaction. As An Option When This Occurs ISAT May Substitute An Alternate Anchorage From Tables D1 or D2 Which Meets or Exceeds The Lowered Brace Reaction.
3. At Max. 30 Degree Brace Inclination.
4. Min. 3,000 psi NWC. Any "N Series" Connection May Be Utilized Having A Numeric Designation Equal To Or Higher Than That Shown.
5. Min. 3,000 psi NWC or LWC. Any "L Series" Connection May Be Utilized Having A Numeric Designation Equal To Or Higher Than That Shown.
6. As An Alternate, Brace Anchorage Connections To Structure May Be Employed Using Any Detail From Structural Connections Section "D" Series Details Where Assembly Design Value Meets Or Exceeds Brace Reaction.
7. For Trade Specific Bracing Installation Notes, Refer To Page 7.1.
8. Utilize Any "G" Series Vertical Support Connection Having A Design Value Equal To Or Greater Than The Corresponding "Rod Total Vertical Load".

REVIEWED FOR CODE COMPLIANCE
OPM-0403
BY: William Staehlin
DATE: 01-26-2024
CALIFORNIA BUILDING CODE 2022

REGISTERED PROFESSIONAL ENGINEER
MARCIN WASAZNIK
S 6612
STRUCTURAL
STATE OF CALIFORNIA

ISAT
A Division of Tomarco Contractor Specialties

International Seismic Application Technology
14848 Northam Street, La Mirada, CA 90638
877-999-4728 (Toll Free) 714-523-0845 (Fax)
www.isatsb.com

Rev. 0
8/03/18
Page
C37 -0.5-30
Outboard

RIGID BRACING REQUIREMENTS [7]

3-ROD TRAPEZED ELECTRICAL SYSTEMS (Conduit, Cable Tray, Bus Duct, Bus Way) — **MAXIMUM SEISMIC DESIGN FORCE = 0.50 G's**

Requires Use of ISAT Seismic Brackets. Use of Any Non-ISAT Bracket Voids Engineering. — *2013 California Building Code Compliant*

Maximum Trapeze Load (lbs/lf)	Max. Vertical Support Spacing (ft.)	Outboard [1] Rod Total Vertical Load (lbs)	Min. [8] Vertical Support Rod Dia. (in.)	OUTBOARD TRANSVERSE BRACING REQUIREMENTS: Max. [2] Brace Spacing (ft.)	Brace [3] Reaction P (lbs)	Min. Brace Assembly E - Pages	Min. Brace Anchorage [6]: Form Pour [4] Deck Page D1	Min. Brace Anchorage [6]: Metal [5] Deck Page D2	OUTBOARD LONGITUDINAL BRACING REQUIREMENTS: Max. [2] Brace Spacing (ft.)	Brace [3] Reaction P (lbs)	Min. Brace Assembly E - Pages	Min. Brace Anchorage [6]: Form Pour [4] Deck Page D1	Min. Brace Anchorage [6]: Metal [5] Deck Page D2
				1-Way Transverse Brace Pattern (B22.0, B22.2, B22.4)					5-Way Transverse, Longitudinal Brace Pattern (B22.4)				
11.0	10	330	3/8	40	342	R38AAEM406	N4	L4	80	171	R38AAEM306	N2	L2
25.0	10	751	1/2	40	778	R12AAEM509	N8	L8	80	389	R12AAEM406	N4	L4
35.0	10	1,051	1/2	40	1,089	R12AAEM506	N11	L11	80	545	R12AAEM406	N6	L6
50.0	10	1,501	5/8	40	1,556	R58AAEM606	N16	L16	80	778	R58AAEM509	N8	L8
65.0	10	1,952	3/4	40	2,022	R34DGB2P09	N21	L21	80	1,011	R34CFB1P06	N11	L11
				OUTBOARD TRANS., LONGITUDINAL BRACING REQUIREMENTS [9]									
				6-Way Transverse, Longitudinal Brace Pattern (B22.5)									
75.0	10	1,252	1/2	40	1,167	R12AAEM506	N12	L12					
100.0	10	1,670	5/8	40	1,556	R58AAEM606	N16	L16					
125.0	10	2,087	3/4	40	1,945	R34DGB2P09	N20	L20					
150.0	10	2,405	3/4	38	2,217	R34DGB2P09	N23	L23					
175.0	10	2,514	3/4	33	2,246	R34DGB2P09	N23	L23					
200.0	10	2,607	3/4	29	2,256	R34DGB2P09	N23	L23					
225.0	10	2,708	3/4	26	2,275	R34DGB2P09	N23	L23					

1. TVL = DL + Fv + ($0.2S_{DS}$/1.4 x Wp). All Terms Are Working Loads. Based On Eccentric Loading, 25% Of Total Load Allocated Per Outboard Rod.
2. Reductions In Actual Installed Brace Spacing Will Result In An Equal Percentage Reduction In Brace Reaction. As An Option When This Occurs ISAT May Substitute An Alternate Anchorage From Tables D1 or D2 Which Meets or Exceeds The Lowered Brace Reaction.
3. At Max. 50 Degree Brace Inclination.
4. Min. 3,000 psi NWC. Any "N Series" Connection May Be Utilized Having A Numeric Designation Equal To Or Higher Than That Shown.
5. Min. 3,000 psi NWC or LWC. Any "L Series" Connection May Be Utilized Having A Numeric Designation Equal To Or Higher Than That Shown.
6. As An Alternate, Brace Anchorage Connections To Structure May Be Employed Using Any Detail From Structural Connections Section "D" Series Details Where Assembly Design Value Meets Or Exceeds Brace Reaction.
7. For Trade Specific Bracing Installation Notes, Refer To Page 7.1.
8. Utilize Any "G" Series Vertical Support Connection Having A Design Value Equal To Or Greater Than The Corresponding "Rod Total Vertical Load".

REVIEWED FOR CODE COMPLIANCE
OPM-0403
BY: William Staehlin
DATE: 01-26-2024
CALIFORNIA BUILDING CODE, 2022

REGISTERED PROFESSIONAL ENGINEER
MARCIN WASAZNIK
S 6612
STRUCTURAL
STATE OF CALIFORNIA

ISAT
A Division of Tomarco Contractor Specialties
International Seismic Application Technology
14848 Northam Street, La Mirada, CA 90638
877-999-4728 (Toll Free) 714-523-0845 (Fax)
www.isatsb.com

Rev. 0
8/03/18
Page
C37 -0.5-45
Outboard

RIGID BRACING REQUIREMENTS [7]

3-ROD TRAPEZED ELECTRICAL SYSTEMS (Conduit, Cable Tray, Bus Duct, Bus Way) — **MAXIMUM SEISMIC DESIGN FORCE = 0.50 G's**

Requires Use of ISAT Seismic Brackets. Use of Any Non-ISAT Bracket Voids Engineering. — *2013 California Building Code Compliant*

Maximum Trapeze Load (lbs/lf)	Max. Vertical Support Spacing (ft.)	Outboard [1] Rod Total Vertical Load (lbs)	Min. [8] Vertical Support Rod Dia. (in.)	OUTBOARD TRANSVERSE BRACING REQUIREMENTS					OUTBOARD LONGITUDINAL BRACING REQUIREMENTS				
				Max. [2] Brace Spacing (ft.)	Brace [3] Reaction P (lbs)	Min. Brace Assembly E - Pages	Min. Brace Anchorage [6] Form Pour [4] Deck Page D1	Min. Brace Anchorage [6] Metal [5] Deck Page D2	Max. [2] Brace Spacing (ft.)	Brace [3] Reaction P (lbs)	Min. Brace Assembly E - Pages	Min. Brace Anchorage [6] Form Pour [4] Deck Page D1	Min. Brace Anchorage [6] Metal [5] Deck Page D2
				1-Way Transverse Brace Pattern (B22.0, B22.2, B22.4)					5-Way Transverse, Longitudinal Brace Pattern (B22.4)				
11.0	10	463	1/2	40	440	R12AAEM406	N5	L5	80	220	R12AAEM306	N3	L3
25.0	10	1,053	1/2	40	1,000	R12AAEM506	N10	L10	80	500	R12AAEM406	N5	L5
35.0	10	1,474	5/8	40	1,400	R58AAEM506	N14	L14	80	700	R58AAEM509	N7	L7
				OUTBOARD TRANS., LONGITUDINAL BRACING REQUIREMENTS [9]									
				6-Way Transverse, Longitudinal Brace Pattern (B22.5)									
50.0	10	1,137	1/2	40	1,000	R12AAEM506	N10	L10					
65.0	10	1,478	5/8	40	1,300	R58AAEM506	N13	L13					
75.0	10	1,633	5/8	38	1,425	R58AAEM506	N15	L15					
100.0	10	1,741	5/8	29	1,450	R58AAEM506	N15	L15					
125.0	10	1,814	5/8	23	1,438	R58AAEM506	N15	L15					
150.0	10	1,886	5/8	19	1,425	R58AAEM506	N15	L15					
175.0	10	1,946	5/8	16	1,400	R58AAEM506	N14	L14					
200.0	10	2,031	5/8	14	1,400	R58AAEM506	N14	L14					
225.0	10	2,175	5/8	13	1,463	R58AAEM606	N15	L15					

1. TVL = DL + Fv + ($0.2S_{DS}$/1.4 x Wp). All Terms Are Working Loads. Based On Eccentric Loading, 25% Of Total Load Allocated Per Outboard Rod.
2. Reductions In Actual Installed Brace Spacing Will Result In An Equal Percentage Reduction In Brace Reaction. As An Option When This Occurs ISAT May Substitute An Alternate Anchorage From Tables D1 or D2 Which Meets or Exceeds The Lowered Brace Reaction.
3. At Max. 60 Degree Brace Inclination.
4. Min. 3,000 psi NWC. Any "N Series" Connection May Be Utilized Having A Numeric Designation Equal To Or Higher Than That Shown.
5. Min. 3,000 psi NWC or LWC. Any "L Series" Connection May Be Utilized Having A Numeric Designation Equal To Or Higher Than That Shown.
6. As An Alternate, Brace Anchorage Connections To Structure May Be Employed Using Any Detail From Structural Connections Section "D" Series Details Where Assembly Design Value Meets Or Exceeds Brace Reaction.
7. For Trade Specific Bracing Installation Notes, Refer To Page 7.1.
8. Utilize Any "G" Series Vertical Support Connection Having A Design Value Equal To Or Greater Than The Corresponding "Rod Total Vertical Load".

REVIEWED FOR CODE COMPLIANCE
OPM-0403
BY: William Staehlin
DATE: 01-26-2024
CALIFORNIA BUILDING CODE 2019

REGISTERED PROFESSIONAL ENGINEER
MARCIN WASAZNIK
S 6612
STRUCTURAL
STATE OF CALIFORNIA

ISAT
A Division of Tomarco Contractor Specialties

International Seismic Application Technology
14848 Northam Street, La Mirada, CA 90638
877-999-4728 (Toll Free) 714-523-0845 (Fax)
www.isatsb.com

Rev. 0
8/03/18
Page
C37 -0.5-60
Outboard

RIGID BRACING REQUIREMENTS [7]

3-ROD TRAPEZED ELECTRICAL SYSTEMS (Conduit, Cable Tray, Bus Duct, Bus Way) — **MAXIMUM SEISMIC DESIGN FORCE = 0.75 G's**

Requires Use of ISAT Seismic Brackets. Use of Any Non-ISAT Bracket Voids Engineering. — *2013 California Building Code Compliant*

Maximum Trapeze Load (lbs/lf)	Max. Vertical Support Spacing (ft.)	Outboard [1] Rod Total Vertical Load (lbs)	Min. [8] Vertical Support Rod Dia. (in.)	OUTBOARD TRANSVERSE BRACING REQUIREMENTS					OUTBOARD LONGITUDINAL BRACING REQUIREMENTS				
				Max. [2] Brace Spacing (ft.)	Brace [3] Reaction P (lbs)	Min. Brace Assembly E - Pages	Min. Brace Anchorage [6] Form Pour [4] Deck Page D1	Min. Brace Anchorage [6] Metal [5] Deck Page D2	Max. [2] Brace Spacing (ft.)	Brace [3] Reaction P (lbs)	Min. Brace Assembly E - Pages	Min. Brace Anchorage [6] Form Pour [4] Deck Page D1	Min. Brace Anchorage [6] Metal [5] Deck Page D2
				1-Way Transverse Brace Pattern (B22.0, B22.2, B22.4)					5-Way Transverse, Longitudinal Brace Pattern (B22.4)				
11.0	10	250	3/8	40	381	R38AAEM406	N4	L4	80	191	R38AAEM306	N2	L2
25.0	10	568	1/2	40	866	R12AAEM506	N9	L9	80	433	R12AAEM406	N5	L5
35.0	10	796	1/2	40	1,212	R12AAEM506	N13	L13	80	606	R12AAEM406	N7	L7
				OUTBOARD TRANS., LONGITUDINAL BRACING REQUIREMENTS [9]									
				6-Way Transverse, Longitudinal Brace Pattern (B22.5)									
50.0	10	653	1/2	40	866	R12AAEM506	N9	L9					
65.0	10	849	1/2	40	1,126	R12AAEM506	N12	L12					
75.0	10	979	1/2	40	1,299	R12AAEM506	N13	L13					
100.0	10	1,136	1/2	33	1,429	R12AAEM506	N15	L15					
125.0	10	1,209	1/2	26	1,407	R12AAEM506	N15	L15					
150.0	10	1,305	1/2	22	1,429	R12AAEM506	N15	L15					
175.0	10	1,395	1/2	19	1,440	R12AAEM506	N15	L15					
200.0	10	1,450	1/2	16	1,386	R12AAEM506	N14	L14					
225.0	10	1,522	1/2	14	1,364	R12AAEM506	N14	L14					

1. TVL = DL + Fv + ($0.2S_{DS}$/1.4 x Wp). All Terms Are Working Loads. Based On Eccentric Loading, 25% Of Total Load Allocated Per Outboard Rod.
2. Reductions In Actual Installed Brace Spacing Will Result In An Equal Percentage Reduction In Brace Reaction. As An Option When This Occurs ISAT May Substitute An Alternate Anchorage From Tables D1 or D2 Which Meets or Exceeds The Lowered Brace Reaction.
3. At Max. 30 Degree Brace Inclination.
4. Min. 3,000 psi NWC. Any "N Series" Connection May Be Utilized Having A Numeric Designation Equal To Or Higher Than That Shown.
5. Min. 3,000 psi NWC or LWC. Any "L Series" Connection May Be Utilized Having A Numeric Designation Equal To Or Higher Than That Shown.
6. As An Alternate, Brace Anchorage Connections To Structure May Be Employed Using Any Detail From Structural Connections Section "D" Series Details Where Assembly Design Value Meets Or Exceeds Brace Reaction.
7. For Trade Specific Bracing Installation Notes, Refer To Page 7.1.
8. Utilize Any "G" Series Vertical Support Connection Having A Design Value Equal To Or Greater Than The Corresponding "Rod Total Vertical Load".

REVIEWED FOR CODE COMPLIANCE
OPM-0403
BY: William Staehlin
DATE: 01-26-2024
CALIFORNIA BUILDING CODE 2019

REGISTERED PROFESSIONAL ENGINEER
MARCIN WASAZNIK
S 6612
STRUCTURAL
STATE OF CALIFORNIA

ISAT
A Division of Tomarco Contractor Specialties

International Seismic Application Technology
14848 Northam Street, La Mirada, CA 90638
877-999-4728 (Toll Free) 714-523-0845 (Fax)
www.isatsb.com

Rev. 0
8/03/18
Page
C37 -0.75-30
Outboard

RIGID BRACING REQUIREMENTS [7]

3-ROD TRAPEZED ELECTRICAL SYSTEMS (Conduit, Cable Tray, Bus Duct, Bus Way) — **MAXIMUM SEISMIC DESIGN FORCE = 0.75 G's**

Requires Use of ISAT Seismic Brackets. Use of Any Non-ISAT Bracket Voids Engineering. — *2013 California Building Code Compliant*

Maximum Trapeze Load (lbs/lf)	Max. Vertical Support Spacing (ft.)	Outboard [1] Rod Total Vertical Load (lbs)	Min. [8] Vertical Support Rod Dia. (in.)	OUTBOARD TRANSVERSE BRACING REQUIREMENTS					OUTBOARD LONGITUDINAL BRACING REQUIREMENTS				
				Max. [2] Brace Spacing (ft.)	Brace [3] Reaction P (lbs)	Min. Brace Assembly E - Pages	Min. Brace Anchorage [6] Form Pour [4] Deck Page D1	Min. Brace Anchorage [6] Metal [5] Deck Page D2	Max. [2] Brace Spacing (ft.)	Brace [3] Reaction P (lbs)	Min. Brace Assembly E - Pages	Min. Brace Anchorage [6] Form Pour [4] Deck Page D1	Min. Brace Anchorage [6] Metal [5] Deck Page D2
				1-Way Transverse Brace Pattern (B22.0, B22.2, B22.4)					5-Way Transverse, Longitudinal Brace Pattern (B22.4)				
11.0	10	477	1/2	40	513	R12AAEM406	N6	L6	80	257	R12AAEM306	N3	L3
25.0	10	1,084	5/8	40	1,167	R58AAEM506	N12	L12	80	583	R58AAEM406	N6	L6
35.0	10	1,517	3/4	40	1,634	R34CFB2P12	N17	L17	80	817	R34CFB1P09	N9	L9
				OUTBOARD TRANS., LONGITUDINAL BRACING REQUIREMENTS [9]									
				6-Way Transverse, Longitudinal Brace Pattern (B22.5)									
50.0	10	1,168	5/8	40	1,167	R58AAEM506	N12	L12					
65.0	10	1,518	5/8	40	1,517	R58AAEM606	N16	L16					
75.0	10	1,752	3/4	40	1,750	R34DGB2P09	N18	L18					
100.0	10	2,236	3/4	38	2,217	R34DGB2P09	N23	L23					
125.0	10	2,296	3/4	30	2,188	R34DGB2P09	N22	L22					
150.0	10	2,380	3/4	25	2,188	R34DGB2P09	N22	L22					
175.0	10	2,514	3/4	22	2,246	R34DGB2P09	N23	L23					
200.0	10	2,574	3/4	19	2,217	R34DGB2P09	N23	L23					
225.0	10	2,671	3/4	17	2,231	R34DGB2P09	N23	L23					

1. TVL = DL + Fv + ($0.2S_{DS}$/1.4 x Wp). All Terms Are Working Loads. Based On Eccentric Loading, 25% Of Total Load Allocated Per Outboard Rod.
2. Reductions In Actual Installed Brace Spacing Will Result In An Equal Percentage Reduction In Brace Reaction. As An Option When This Occurs ISAT May Substitute An Alternate Anchorage From Tables D1 or D2 Which Meets or Exceeds The Lowered Brace Reaction.
3. At Max. 50 Degree Brace Inclination.
4. Min. 3,000 psi NWC. Any "N Series" Connection May Be Utilized Having A Numeric Designation Equal To Or Higher Than That Shown.
5. Min. 3,000 psi NWC or LWC. Any "L Series" Connection May Be Utilized Having A Numeric Designation Equal To Or Higher Than That Shown.
6. As An Alternate, Brace Anchorage Connections To Structure May Be Employed Using Any Detail From Structural Connections Section "D" Series Details Where Assembly Design Value Meets Or Exceeds Brace Reaction.
7. For Trade Specific Bracing Installation Notes, Refer To Page 7.1.
8. Utilize Any "G" Series Vertical Support Connection Having A Design Value Equal To Or Greater Than The Corresponding "Rod Total Vertical Load".

REVIEWED FOR CODE COMPLIANCE
OPM-0403
BY: William Staehlin
DATE: 01-26-2024
CALIFORNIA BUILDING CODE 2022

REGISTERED PROFESSIONAL ENGINEER
MARCIN WASAZNIK
S 6612
STRUCTURAL
STATE OF CALIFORNIA

ISAT
A Division of Tomarco Contractor Specialties

International Seismic Application Technology
14848 Northam Street, La Mirada, CA 90638
877-999-4728 (Toll Free) 714-523-0845 (Fax)
www.isatsb.com

Rev. 0
8/03/18
Page
C37 -0.75-45
Outboard

RIGID BRACING REQUIREMENTS [7]

3-ROD TRAPEZED ELECTRICAL SYSTEMS (Conduit, Cable Tray, Bus Duct, Bus Way) — **MAXIMUM SEISMIC DESIGN FORCE = 0.75 G's**

Requires Use of ISAT Seismic Brackets. Use of Any Non-ISAT Bracket Voids Engineering. — *2013 California Building Code Compliant*

Maximum Trapeze Load (lbs/lf)	Max. Vertical Support Spacing (ft.)	Outboard [1] Rod Total Vertical Load (lbs)	Min. [8] Vertical Support Rod Dia. (in.)	OUTBOARD TRANSVERSE BRACING REQUIREMENTS					OUTBOARD LONGITUDINAL BRACING REQUIREMENTS				
				Max. [2] Brace Spacing (ft.)	Brace [3] Reaction P (lbs)	Min. Brace Assembly E - Pages	Min. Brace Anchorage [6] Form Pour [4] Deck Page D1	Min. Brace Anchorage [6] Metal [5] Deck Page D2	Max. [2] Brace Spacing (ft.)	Brace [3] Reaction P (lbs)	Min. Brace Assembly E - Pages	Min. Brace Anchorage [6] Form Pour [4] Deck Page D1	Min. Brace Anchorage [6] Metal [5] Deck Page D2
				1-Way Transverse Brace Pattern (B22.0, B22.2, B22.4)					5-Way Transverse, Longitudinal Brace Pattern (B22.4)				
11.0	10	676	1/2	40	660	R12AAEM406	N7	L7	80	330	R12AAEM409	N4	L4
				OUTBOARD TRANS., LONGITUDINAL BRACING REQUIREMENTS [9]									
				6-Way Transverse, Longitudinal Brace Pattern (B22.5)									
25.0	10	811	1/2	40	750	R12AAEM509	N8	L8					
35.0	10	1,135	5/8	40	1,050	R58AAEM506	N11	L11					
50.0	10	1,549	5/8	38	1,425	R58AAEM506	N15	L15					
65.0	10	1,588	5/8	29	1,414	R58AAEM506	N15	L15					
75.0	10	1,615	5/8	25	1,406	R58AAEM506	N15	L15					
100.0	10	1,717	5/8	19	1,425	R58AAEM506	N15	L15					
125.0	10	1,783	5/8	15	1,406	R58AAEM506	N15	L15					
150.0	10	1,922	5/8	13	1,463	R58AAEM606	N15	L15					
175.0	10	1,989	5/8	11	1,444	R58AAEM506	N15	L15					

1. TVL = DL + Fv + ($0.2S_{DS}$/1.4 x Wp). All Terms Are Working Loads. Based On Eccentric Loading, 25% Of Total Load Allocated Per Outboard Rod.
2. Reductions In Actual Installed Brace Spacing Will Result In An Equal Percentage Reduction In Brace Reaction. As An Option When This Occurs ISAT May Substitute An Alternate Anchorage From Tables D1 or D2 Which Meets or Exceeds The Lowered Brace Reaction.
3. At Max. 60 Degree Brace Inclination.
4. Min. 3,000 psi NWC. Any "N Series" Connection May Be Utilized Having A Numeric Designation Equal To Or Higher Than That Shown.
5. Min. 3,000 psi NWC or LWC. Any "L Series" Connection May Be Utilized Having A Numeric Designation Equal To Or Higher Than That Shown.
6. As An Alternate, Brace Anchorage Connections To Structure May Be Employed Using Any Detail From Structural Connections Section "D" Series Details Where Assembly Design Value Meets Or Exceeds Brace Reaction.
7. For Trade Specific Bracing Installation Notes, Refer To Page 7.1.
8. Utilize Any "G" Series Vertical Support Connection Having A Design Value Equal To Or Greater Than The Corresponding "Rod Total Vertical Load".

REVIEWED FOR CODE COMPLIANCE
OPM-0403
BY: William Staehlin
DATE: 01-26-2024
CALIFORNIA BUILDING CODE, 2022

REGISTERED PROFESSIONAL ENGINEER
MARCIN WASAZNIK
S 6612
STRUCTURAL
STATE OF CALIFORNIA

ISAT
A Division of Tomarco Contractor Specialties

International Seismic Application Technology
14848 Northam Street, La Mirada, CA 90638
877-999-4728 (Toll Free) 714-523-0845 (Fax)
www.isatsb.com

Rev. 0
8/03/18
Page
C37 -0.75-60
Outboard

RIGID BRACING REQUIREMENTS [7]

3-ROD TRAPEZED ELECTRICAL SYSTEMS (Conduit, Cable Tray, Bus Duct, Bus Way) — **MAXIMUM SEISMIC DESIGN FORCE = 1.00 G's**

Requires Use of ISAT Seismic Brackets. Use of Any Non-ISAT Bracket Voids Engineering. — *2013 California Building Code Compliant*

Maximum Trapeze Load (lbs/lf)	Max. Vertical Support Spacing (ft.)	Outboard [1] Rod Total Vertical Load (lbs)	Min. [8] Vertical Support Rod Dia. (in.)	OUTBOARD TRANSVERSE BRACING REQUIREMENTS					OUTBOARD LONGITUDINAL BRACING REQUIREMENTS				
				Max. [2] Brace Spacing (ft.)	Brace [3] Reaction P (lbs)	Min. Brace Assembly E - Pages	Min. Brace Anchorage [6] Form Pour [4] Deck Page D1	Min. Brace Anchorage [6] Metal [5] Deck Page D2	Max. [2] Brace Spacing (ft.)	Brace [3] Reaction P (lbs)	Min. Brace Assembly E - Pages	Min. Brace Anchorage [6] Form Pour [4] Deck Page D1	Min. Brace Anchorage [6] Metal [5] Deck Page D2
				1-Way Transverse Brace Pattern (B22.0, B22.2, B22.4)					5-Way Transverse, Longitudinal Brace Pattern (B22.4)				
11.0	10	321	3/8	40	508	R38AAEM406	N6	L6	80	254	R38AAEM306	N3	L3
25.0	10	730	1/2	40	1,155	R12AAEM506	N12	L12	80	577	R12AAEM406	N6	L6
				OUTBOARD TRANS., LONGITUDINAL BRACING REQUIREMENTS [9]									
				6-Way Transverse, Longitudinal Brace Pattern (B22.5)									
35.0	10	570	1/2	40	808	R12AAEM506	N9	L9					
50.0	10	814	1/2	40	1,155	R12AAEM506	N12	L12					
65.0	10	1,017	1/2	38	1,426	R12AAEM506	N15	L15					
75.0	10	1,052	1/2	33	1,429	R12AAEM506	N15	L15					
100.0	10	1,144	1/2	25	1,443	R12AAEM506	N15	L15					
125.0	10	1,229	1/2	20	1,443	R12AAEM506	N15	L15					
150.0	10	1,281	1/2	16	1,386	R12AAEM506	N14	L14					
175.0	10	1,381	1/2	14	1,415	R12AAEM506	N15	L15					
200.0	10	1,450	1/2	12	1,386	R12AAEM506	N14	L14					
225.0	10	1,558	1/2	11	1,429	R12AAEM506	N15	L15					

1. TVL = DL + Fv + ($0.2S_{DS}$/1.4 x Wp). All Terms Are Working Loads. Based On Eccentric Loading, 25% Of Total Load Allocated Per Outboard Rod.
2. Reductions In Actual Installed Brace Spacing Will Result In An Equal Percentage Reduction In Brace Reaction. As An Option When This Occurs ISAT May Substitute An Alternate Anchorage From Tables D1 or D2 Which Meets or Exceeds The Lowered Brace Reaction.
3. At Max. 30 Degree Brace Inclination.
4. Min. 3,000 psi NWC. Any "N Series" Connection May Be Utilized Having A Numeric Designation Equal To Or Higher Than That Shown.
5. Min. 3,000 psi NWC or LWC. Any "L Series" Connection May Be Utilized Having A Numeric Designation Equal To Or Higher Than That Shown.
6. As An Alternate, Brace Anchorage Connections To Structure May Be Employed Using Any Detail From Structural Connections Section "D" Series Details Where Assembly Design Value Meets Or Exceeds Brace Reaction.
7. For Trade Specific Bracing Installation Notes, Refer To Page 7.1.
8. Utilize Any "G" Series Vertical Support Connection Having A Design Value Equal To Or Greater Than The Corresponding "Rod Total Vertical Load".

REVIEWED FOR CODE COMPLIANCE
OPM-0403
BY: William Staehlin
DATE: 01-26-2024
CALIFORNIA BUILDING CODE 2019

REGISTERED PROFESSIONAL ENGINEER MARCIN WASAZNIK S-6612 STRUCTURAL STATE OF CALIFORNIA

ISAT
A Division of Tomarco Contractor Specialties

International Seismic Application Technology
14848 Northam Street, La Mirada, CA 90638
877-999-4728 (Toll Free) 714-523-0845 (Fax)
www.isatsb.com

Rev. 0
8/03/18
Page
C37 -1-30
Outboard

RIGID BRACING REQUIREMENTS [7]

3-ROD TRAPEZED ELECTRICAL SYSTEMS (Conduit, Cable Tray, Bus Duct, Bus Way) — **MAXIMUM SEISMIC DESIGN FORCE = 1.00 G's**

Requires Use of ISAT Seismic Brackets. Use of Any Non-ISAT Bracket Voids Engineering. — *2013 California Building Code Compliant*

Maximum Trapeze Load (lbs/lf)	Max. Vertical Support Spacing (ft.)	Outboard [1] Rod Total Vertical Load (lbs)	Min. [8] Vertical Support Rod Dia. (in.)	OUTBOARD TRANSVERSE BRACING REQUIREMENTS					OUTBOARD LONGITUDINAL BRACING REQUIREMENTS				
				Max. [2] Brace Spacing (ft.)	Brace [3] Reaction P (lbs)	Min. Brace Assembly E - Pages	Min. Brace Anchorage [6] Form Pour [4] Deck Page D1	Min. Brace Anchorage [6] Metal [5] Deck Page D2	Max. [2] Brace Spacing (ft.)	Brace [3] Reaction P (lbs)	Min. Brace Assembly E - Pages	Min. Brace Anchorage [6] Form Pour [4] Deck Page D1	Min. Brace Anchorage [6] Metal [5] Deck Page D2
				1-Way Transverse Brace Pattern (B22.0, B22.2, B22.4)					5-Way Transverse, Longitudinal Brace Pattern (B22.4)				
11.0	10	623	1/2	40	685	R12AAEM509	N7	L7	80	342	R12AAEM406	N4	L4
25.0	10	1,417	5/8	40	1,556	R58AAEM606	N16	L16	80	778	R58AAEM509	N8	L8
35.0	10	1,984	3/4	40	2,178	R34DGB2P09	N22	L22	80	1,089	R34CFB1P06	N11	L11
				OUTBOARD TRANS., LONGITUDINAL BRACING REQUIREMENTS [9]									
				6-Way Transverse, Longitudinal Brace Pattern (B22.5)									
50.0	10	1,501	5/8	40	1,556	R58AAEM606	N16	L16					
65.0	10	1,952	3/4	40	2,022	R34DGB2P09	N21	L21					
75.0	10	2,152	3/4	38	2,217	R34DGB2P09	N23	L23					
100.0	10	2,203	3/4	28	2,178	R34DGB2P09	N22	L22					
125.0	10	2,337	3/4	23	2,236	R34DGB2P09	N23	L23					
150.0	10	2,405	3/4	19	2,217	R34DGB2P09	N23	L23					
175.0	10	2,456	3/4	16	2,178	R34DGB2P09	N22	L22					
200.0	10	2,540	3/4	14	2,178	R34DGB2P09	N22	L22					
225.0	10	2,708	3/4	13	2,275	R34DGB2P09	N23	L23					

1. TVL = DL + Fv + ($0.2S_{DS}$/1.4 x Wp). All Terms Are Working Loads. Based On Eccentric Loading, 25% Of Total Load Allocated Per Outboard Rod.
2. Reductions In Actual Installed Brace Spacing Will Result In An Equal Percentage Reduction In Brace Reaction. As An Option When This Occurs ISAT May Substitute An Alternate Anchorage From Tables D1 or D2 Which Meets or Exceeds The Lowered Brace Reaction.
3. At Max. 50 Degree Brace Inclination.
4. Min. 3,000 psi NWC. Any "N Series" Connection May Be Utilized Having A Numeric Designation Equal To Or Higher Than That Shown.
5. Min. 3,000 psi NWC or LWC. Any "L Series" Connection May Be Utilized Having A Numeric Designation Equal To Or Higher Than That Shown.
6. As An Alternate, Brace Anchorage Connections To Structure May Be Employed Using Any Detail From Structural Connections Section "D" Series Details Where Assembly Design Value Meets Or Exceeds Brace Reaction.
7. For Trade Specific Bracing Installation Notes, Refer To Page 7.1.
8. Utilize Any "G" Series Vertical Support Connection Having A Design Value Equal To Or Greater Than The Corresponding "Rod Total Vertical Load".

REVIEWED FOR CODE COMPLIANCE
OPM-0403
BY: William Staehlin
DATE: 01-26-2024
CALIFORNIA BUILDING CODE 2022

REGISTERED PROFESSIONAL ENGINEER MARCIN WASAZNIK S-6612 STRUCTURAL STATE OF CALIFORNIA

ISAT
A Division of Tomarco Contractor Specialties

International Seismic Application Technology
14848 Northam Street, La Mirada, CA 90638
877-999-4728 (Toll Free) 714-523-0845 (Fax)
www.isatsb.com

Rev. 0
8/03/18
Page
C37 -1-45
Outboard

RIGID BRACING REQUIREMENTS [7]

3-ROD TRAPEZED ELECTRICAL SYSTEMS (Conduit, Cable Tray, Bus Duct, Bus Way) — **MAXIMUM SEISMIC DESIGN FORCE = 1.00 G's**

Requires Use of ISAT Seismic Brackets. Use of Any Non-ISAT Bracket Voids Engineering. — *2013 California Building Code Compliant*

Maximum Trapeze Load (lbs/lf)	Max. Vertical Support Spacing (ft.)	Outboard [1] Rod Total Vertical Load (lbs)	Min. [8] Vertical Support Rod Dia. (in.)	OUTBOARD TRANSVERSE BRACING REQUIREMENTS					OUTBOARD LONGITUDINAL BRACING REQUIREMENTS				
				Max. [2] Brace Spacing (ft.)	Brace [3] Reaction P (lbs)	Min. Brace Assembly E - Pages	Min. Brace Anchorage [6] Form Pour [4] Deck Page D1	Min. Brace Anchorage [6] Metal [5] Deck Page D2	Max. [2] Brace Spacing (ft.)	Brace [3] Reaction P (lbs)	Min. Brace Assembly E - Pages	Min. Brace Anchorage [6] Form Pour [4] Deck Page D1	Min. Brace Anchorage [6] Metal [5] Deck Page D2
				1-Way Transverse Brace Pattern (B22.0, B22.2, B22.4)					5-Way Transverse, Longitudinal Brace Pattern (B22.4)				
11.0	10	889	1/2	40	880	R12AAEM506	N9	L9	80	440	R12AAEM406	N5	L5
				OUTBOARD TRANS., LONGITUDINAL BRACING REQUIREMENTS [9]									
				6-Way Transverse, Longitudinal Brace Pattern (B22.5)									
25.0	10	1,053	1/2	40	1,000	R12AAEM506	N10	L10					
35.0	10	1,474	5/8	40	1,400	R58AAEM506	N14	L14					
50.0	10	1,524	5/8	28	1,400	R58AAEM506	N14	L14					
65.0	10	1,604	5/8	22	1,430	R58AAEM506	N15	L15					
75.0	10	1,633	5/8	19	1,425	R58AAEM506	N15	L15					
100.0	10	1,693	5/8	14	1,400	R58AAEM506	N14	L14					
125.0	10	1,753	5/8	11	1,375	R58AAEM506	N14	L14					

1. TVL = DL + Fv + ($0.2S_{DS}$/1.4 x Wp). All Terms Are Working Loads. Based On Eccentric Loading, 25% Of Total Load Allocated Per Outboard Rod.
2. Reductions In Actual Installed Brace Spacing Will Result In An Equal Percentage Reduction In Brace Reaction. As An Option When This Occurs ISAT May Substitute An Alternate Anchorage From Tables D1 or D2 Which Meets or Exceeds The Lowered Brace Reaction.
3. At Max. 60 Degree Brace Inclination.
4. Min. 3,000 psi NWC. Any "N Series" Connection May Be Utilized Having A Numeric Designation Equal To Or Higher Than That Shown.
5. Min. 3,000 psi NWC or LWC. Any "L Series" Connection May Be Utilized Having A Numeric Designation Equal To Or Higher Than That Shown.
6. As An Alternate, Brace Anchorage Connections To Structure May Be Employed Using Any Detail From Structural Connections Section "D" Series Details Where Assembly Design Value Meets Or Exceeds Brace Reaction.
7. For Trade Specific Bracing Installation Notes, Refer To Page 7.1.
8. Utilize Any "G" Series Vertical Support Connection Having A Design Value Equal To Or Greater Than The Corresponding "Rod Total Vertical Load".

REVIEWED FOR CODE COMPLIANCE
OPM-0403
BY: William Staehlin
DATE: 01-26-2024
CALIFORNIA BUILDING CODE, 2022

REGISTERED PROFESSIONAL ENGINEER MARCIN WASAZNIK S-6612 STRUCTURAL STATE OF CALIFORNIA

ISAT
A Division of Tomarco Contractor Specialties
International Seismic Application Technology
14848 Northam Street, La Mirada, CA 90638
877-999-4728 (Toll Free) 714-523-0845 (Fax)
www.isatsb.com

Rev. 0
8/03/18
Page
C37 -1-60
Outboard

CABLE BRACING REQUIREMENTS [7]

3-ROD TRAPEZED ELECTRICAL SYSTEMS (Conduit, Cable Tray, Bus Duct, Bus Way) — **MAXIMUM SEISMIC DESIGN FORCE = 0.25 G's**

Requires Use of ISAT Seismic Brackets. Use of Any Non-ISAT Bracket Voids Engineering. — *2013 California Building Code Compliant*

Maximum Trapeze Load (lbs/lf)	Max. Vertical Support Spacing (ft.)	Inboard [1, 8] Rod Total Vertical Load (lbs)	Min. [8] Vertical Support Rod Dia. (in.)	INBOARD LONGITUDINAL BRACING REQUIREMENTS: Max. [2] Brace Spacing (ft.)	Brace [3] Reaction P (lbs)	Min. Brace Assembly E - Pages	Min. Brace Anchorage [6]: Form Pour [4] Deck Page D1	Min. Brace Anchorage [6]: Metal [5] Deck Page D2
				8-Way Transverse, Longitudinal Brace Pattern (B26.1)				
11.0	10	126	3/8	40	108	C38AA04WS	N2	L2
25.0	10	287	1/2	40	245	C12AA04WS	N3	L3
35.0	10	402	1/2	40	344	C12AA04WS	N4	L4
50.0	10	574	1/2	40	491	C12AA04WS	N5	L5
65.0	10	746	1/2	40	638	C12AA04WS	N7	L7
75.0	10	861	1/2	40	736	C12AA06WS	N8	L8
100.0	10	1,148	1/2	40	981	C12AA06WS	N10	L10
125.0	10	1,434	1/2	40	1,227	C12AA06WS	N13	L13
150.0	10	1,721	1/2	39	1,435	C12AA06WS	N15	L15
175.0	10	2,008	1/2	33	1,417	C12AA06WS	N15	L15
200.0	10	2,295	1/2	29	1,423	C12AA06WS	N15	L15
225.0	10	2,582	5/8	26	1,435	C58AA06WS	N15	L15

1. TVL = DL + Fv + ($0.2S_{DS}$/1.4 x Wp). All Terms Are Working Loads. Based On Eccentric Loading, 85% Of Total Load Allocated Per Inboard Rod.
2. Reductions In Actual Installed Brace Spacing Will Result In An Equal Percentage Reduction In Brace Reaction. As An Option When This Occurs ISAT May Substitute An Alternate Anchorage From Tables D1 or D2 Which Meets or Exceeds The Lowered Brace Reaction.
3. At Max. 30 Degree Brace Inclination.
4. Min. 3,000 psi NWC. Any "N Series" Connection May Be Utilized Having A Numeric Designation Equal To Or Higher Than That Shown.
5. Min. 3,000 psi NWC or LWC. Any "L Series" Connection May Be Utilized Having A Numeric Designation Equal To Or Higher Than That Shown.
6. As An Alternate, Brace Anchorage Connections To Structure May Be Employed Using Any Detail From Structural Connections Section "D" Series Details Where Assembly Design Value Meets Or Exceeds Brace Reaction.
7. For Trade Specific Bracing Installation Notes, Refer To Page 7.1.
8. Utilize Any "G" Series Vertical Support Connection Having A Design Value Equal To Or Greater Than The Corresponding "Rod Total Vertical Load".

REVIEWED FOR CODE COMPLIANCE
HCAI
OPM-0403
BY: William Staehlin
DATE: 01-26-2024
CALIFORNIA BUILDING CODES

REGISTERED PROFESSIONAL ENGINEER
MARCIN WASAZNIK
S 6612
STRUCTURAL
STATE OF CALIFORNIA

ISAT
A Division of Tomarco Contractor Specialties
International Seismic Application Technology
14848 Northam Street, La Mirada, CA 90638
877-999-4728 (Toll Free) 714-523-0845 (Fax)
www.isatsb.com

Rev. 1
11/19/18
Page
C38 -0.25-30
Inboard

2013 CBC OSHPD

CABLE BRACING REQUIREMENTS [7]

3-ROD TRAPEZED ELECTRICAL SYSTEMS (Conduit, Cable Tray, Bus Duct, Bus Way) — **MAXIMUM SEISMIC DESIGN FORCE = 0.25 G's**

Requires Use of ISAT Seismic Brackets. Use of Any Non-ISAT Bracket Voids Engineering. — *2013 California Building Code Compliant*

Maximum Trapeze Load (lbs/lf)	Max. Vertical Support Spacing (ft.)	Inboard [1, 8] Rod Total Vertical Load (lbs)	Min. [8] Vertical Support Rod Dia. (in.)	INBOARD LONGITUDINAL BRACING REQUIREMENTS: Max. [2] Brace Spacing (ft.)	Brace [3] Reaction P (lbs)	Min. Brace Assembly E - Pages	Min. Brace Anchorage [6]: Form Pour [4] Deck Page D1	Min. Brace Anchorage [6]: Metal [5] Deck Page D2
				8-Way Transverse, Longitudinal Brace Pattern (B26.1)				
11.0	10	126	3/8	40	145	C38AA04WS	N2	L2
25.0	10	287	1/2	40	331	C12AA04WS	N4	L4
35.0	10	402	1/2	40	463	C12AA04WS	N5	L5
50.0	10	574	1/2	40	661	C12AA04WS	N7	L7
65.0	10	746	1/2	40	860	C12AA06WS	N9	L9
75.0	10	861	1/2	40	992	C12AA06WS	N10	L10
100.0	10	1,148	1/2	40	1,322	C12AA06WS	N14	L14
125.0	10	1,434	5/8	40	1,653	C58DG06TS	N17	L17
150.0	10	1,721	5/8	36	1,785	C58DG06TS	N18	L18
175.0	10	2,008	5/8	30	1,736	C58DG06TS	N18	L18
200.0	10	2,295	5/8	26	1,719	C58DG06TS	N18	L18
225.0	10	2,582	5/8	24	1,785	C58DG06TS	N18	L18

1. TVL = DL + Fv + ($0.2S_{DS}$/1.4 x Wp). All Terms Are Working Loads. Based On Eccentric Loading, 85% Of Total Load Allocated Per Inboard Rod.
2. Reductions In Actual Installed Brace Spacing Will Result In An Equal Percentage Reduction In Brace Reaction. As An Option When This Occurs ISAT May Substitute An Alternate Anchorage From Tables D1 or D2 Which Meets or Exceeds The Lowered Brace Reaction.
3. At Max. 50 Degree Brace Inclination.
4. Min. 3,000 psi NWC. Any "N Series" Connection May Be Utilized Having A Numeric Designation Equal To Or Higher Than That Shown.
5. Min. 3,000 psi NWC or LWC. Any "L Series" Connection May Be Utilized Having A Numeric Designation Equal To Or Higher Than That Shown.
6. As An Alternate, Brace Anchorage Connections To Structure May Be Employed Using Any Detail From Structural Connections Section "D" Series Details Where Assembly Design Value Meets Or Exceeds Brace Reaction.
7. For Trade Specific Bracing Installation Notes, Refer To Page 7.1.
8. Utilize Any "G" Series Vertical Support Connection Having A Design Value Equal To Or Greater Than The Corresponding "Rod Total Vertical Load".

REVIEWED FOR CODE COMPLIANCE
HCAI
OPM-0403
BY: William Staehlin
DATE: 01-26-2024
CALIFORNIA BUILDING CODES

REGISTERED PROFESSIONAL ENGINEER MARCIN WASAZNIK S 6612 STRUCTURAL STATE OF CALIFORNIA

ISAT
A Division of Tomarco Contractor Specialties
International Seismic Application Technology
14848 Northam Street, La Mirada, CA 90638
877-999-4728 (Toll Free) 714-523-0845 (Fax)
www.isatsb.com

Rev. 1
11/19/18
Page
C38 -0.25-45
Inboard

CABLE BRACING REQUIREMENTS [7]

3-ROD TRAPEZED ELECTRICAL SYSTEMS (Conduit, Cable Tray, Bus Duct, Bus Way) — **MAXIMUM SEISMIC DESIGN FORCE = 0.25 G's**

Requires Use of ISAT Seismic Brackets. Use of Any Non-ISAT Bracket Voids Engineering. — *2013 California Building Code Compliant*

Maximum Trapeze Load (lbs/lf)	Max. Vertical Support Spacing (ft.)	Inboard [1, 8] Rod Total Vertical Load (lbs)	Min. [8] Vertical Support Rod Dia. (in.)	INBOARD LONGITUDINAL BRACING REQUIREMENTS				
				Max. [2] Brace Spacing Page D1	Brace [3] Reaction P Page D2	Min. Brace Assembly Page E3	Min. Brace Anchorage [6] Form Pour [4] Deck Page D1-03	Min. Brace Anchorage [6] Metal [5] Deck Page D2-03
				8-Way Transverse, Longitudinal Brace Pattern (B26.1)				
11.0	10	126	3/8	40	187	C38AA04WS	N2	L2
25.0	10	287	1/2	40	425	C12AA04WS	N5	L5
35.0	10	402	1/2	40	595	C12AA04WS	N6	L6
50.0	10	574	1/2	40	850	C12AA06WS	N9	L9
65.0	10	746	1/2	40	1,105	C12AA06WS	N12	L12
75.0	10	861	5/8	40	1,275	C58AA06WS	N13	L13
100.0	10	1,148	5/8	34	1,445	C58AA06WS	N15	L15
125.0	10	1,434	5/8	27	1,434	C58AA06WS	N15	L15
150.0	10	1,721	5/8	23	1,466	C58AA06WS	N15	L15
175.0	10	2,008	5/8	19	1,413	C58AA06WS	N15	L15
200.0	10	2,295	5/8	17	1,445	C58AA06WS	N15	L15
225.0	10	2,582	5/8	15	1,434	C58AA06WS	N15	L15

1. TVL = DL + Fv + ($0.2S_{DS}$/1.4 x Wp). All Terms Are Working Loads. Based On Eccentric Loading, 85% Of Total Load Allocated Per Inboard Rod.
2. Reductions In Actual Installed Brace Spacing Will Result In An Equal Percentage Reduction In Brace Reaction. As An Option When This Occurs ISAT May Substitute An Alternate Anchorage From Tables D1 or D2 Which Meets or Exceeds The Lowered Brace Reaction.
3. At Max. 60 Degree Brace Inclination.
4. Min. 3,000 psi NWC. Any "N Series" Connection May Be Utilized Having A Numeric Designation Equal To Or Higher Than That Shown.
5. Min. 3,000 psi NWC or LWC. Any "L Series" Connection May Be Utilized Having A Numeric Designation Equal To Or Higher Than That Shown.
6. As An Alternate, Brace Anchorage Connections To Structure May Be Employed Using Any Detail From Structural Connections Section "D" Series Details Where Assembly Design Value Meets Or Exceeds Brace Reaction.
7. For Trade Specific Bracing Installation Notes, Refer To Page 7.1.
8. Utilize Any "G" Series Vertical Support Connection Having A Design Value Equal To Or Greater Than The Corresponding "Rod Total Vertical Load".
9. Refer To C48.7A For Outboard Rod Bracing Requirements.

REVIEWED FOR CODE COMPLIANCE
HCAI
OPM-0403
BY: William Staehlin
DATE: 01-26-2024
CALIFORNIA BUILDING CODES

REGISTERED PROFESSIONAL ENGINEER MARCIN WASAZNIK S 6612 STRUCTURAL STATE OF CALIFORNIA

ISAT
A Division of Tomarco Contractor Specialties
International Seismic Application Technology
14848 Northam Street, La Mirada, CA 90638
877-999-4728 (Toll Free) 714-523-0845 (Fax)
www.isatsb.com

Rev. 1
11/19/18
Page
C38 -0.25-60
Inboard

CABLE BRACING REQUIREMENTS [7]

3-ROD TRAPEZED ELECTRICAL SYSTEMS (Conduit, Cable Tray, Bus Duct, Bus Way) — **MAXIMUM SEISMIC DESIGN FORCE = 0.50 G's**

Requires Use of ISAT Seismic Brackets. Use of Any Non-ISAT Bracket Voids Engineering. — *2013 California Building Code Compliant*

Maximum Trapeze Load (lbs/lf)	Max. Vertical Support Spacing (ft.)	Inboard [1, 8] Rod Total Vertical Load (lbs)	Min. [8] Vertical Support Rod Dia. (in.)	INBOARD LONGITUDINAL BRACING REQUIREMENTS: Max. [2] Brace Spacing (ft.)	Brace [3] Reaction P (lbs)	Min. Brace Assembly E - Pages	Min. Brace Anchorage [6]: Form Pour [4] Deck Page D1	Min. Brace Anchorage [6]: Metal [5] Deck Page D2
				8-Way Transverse, Longitudinal Brace Pattern (B26.1)				
11.0	10	126	3/8	40	216	C38AA04WS	N3	L3
25.0	10	287	1/2	40	491	C12AA04WS	N5	L5
35.0	10	402	1/2	40	687	C12AA06WS	N7	L7
50.0	10	574	1/2	40	981	C12AA06WS	N10	L10
65.0	10	746	1/2	40	1,276	C12AA06WS	N13	L13
75.0	10	861	1/2	38	1,399	C12AA06WS	N14	L14
100.0	10	1,148	1/2	28	1,374	C12AA06WS	N14	L14
125.0	10	1,434	1/2	22	1,350	C12AA06WS	N14	L14
150.0	10	1,721	1/2	18	1,325	C12AA06WS	N14	L14
175.0	10	2,008	1/2	16	1,374	C12AA06WS	N14	L14
200.0	10	2,295	1/2	14	1,374	C12AA06WS	N14	L14
225.0	10	2,582	5/8	12	1,325	C58AA06WS	N14	L14

1. TVL = DL + Fv + ($0.2S_{DS}$/1.4 x Wp). All Terms Are Working Loads. Based On Eccentric Loading, 85% Of Total Load Allocated Per Inboard Rod.
2. Reductions In Actual Installed Brace Spacing Will Result In An Equal Percentage Reduction In Brace Reaction. As An Option When This Occurs ISAT May Substitute An Alternate Anchorage From Tables D1 or D2 Which Meets or Exceeds The Lowered Brace Reaction.
3. At Max. 30 Degree Brace Inclination.
4. Min. 3,000 psi NWC. Any "N Series" Connection May Be Utilized Having A Numeric Designation Equal To Or Higher Than That Shown.
5. Min. 3,000 psi NWC or LWC. Any "L Series" Connection May Be Utilized Having A Numeric Designation Equal To Or Higher Than That Shown.
6. As An Alternate, Brace Anchorage Connections To Structure May Be Employed Using Any Detail From Structural Connections Section "D" Series Details Where Assembly Design Value Meets Or Exceeds Brace Reaction.
7. For Trade Specific Bracing Installation Notes, Refer To Page 7.1.
8. Utilize Any "G" Series Vertical Support Connection Having A Design Value Equal To Or Greater Than The Corresponding "Rod Total Vertical Load".

REVIEWED FOR CODE COMPLIANCE
HCAI
OPM-0403
BY: William Staehlin
DATE: 01-26-2024
CALIFORNIA BUILDING CODES

REGISTERED PROFESSIONAL ENGINEER
MARCIN WASAZNIK
S 6612
STRUCTURAL
STATE OF CALIFORNIA

ISAT
A Division of Tomarco Contractor Specialties
International Seismic Application Technology
14848 Northam Street, La Mirada, CA 90638
877-999-4728 (Toll Free) 714-523-0845 (Fax)
www.isatsb.com

Rev. 1
11/19/18
Page
C38 -0.5-30
Inboard

CABLE BRACING REQUIREMENTS [7]

3-ROD TRAPEZED ELECTRICAL SYSTEMS (Conduit, Cable Tray, Bus Duct, Bus Way) — **MAXIMUM SEISMIC DESIGN FORCE = 0.50 G's**

Requires Use of ISAT Seismic Brackets. Use of Any Non-ISAT Bracket Voids Engineering. — *2013 California Building Code Compliant*

Maximum Trapeze Load (lbs/lf)	Max. Vertical Support Spacing (ft.)	Inboard [1, 8] Rod Total Vertical Load (lbs)	Min. [8] Vertical Support Rod Dia. (in.)	INBOARD LONGITUDINAL BRACING REQUIREMENTS: Max. [2] Brace Spacing (ft.)	Brace [3] Reaction P (lbs)	Min. Brace Assembly E - Pages	Min. Brace Anchorage [6]: Form Pour [4] Deck Page D1	Min. Brace Anchorage [6]: Metal [5] Deck Page D2
				8-Way Transverse, Longitudinal Brace Pattern (B26.1)				
11.0	10	126	3/8	40	291	C38AA04WS	N3	L3
25.0	10	287	1/2	40	661	C12AA04WS	N7	L7
35.0	10	402	1/2	40	926	C12AA06WS	N10	L10
50.0	10	574	1/2	40	1,322	C12AA06WS	N14	L14
65.0	10	746	5/8	40	1,719	C58DG06TS	N18	L18
75.0	10	861	5/8	36	1,785	C58DG06TS	N18	L18
100.0	10	1,148	5/8	26	1,719	C58DG06TS	N18	L18
125.0	10	1,434	5/8	22	1,818	C58DG06TS	N19	L19
150.0	10	1,721	5/8	18	1,785	C58DG06TS	N18	L18
175.0	10	2,008	5/8	14	1,620	C58DG06TS	N17	L17
200.0	10	2,295	5/8	12	1,587	C58DG06TS	N16	L16
225.0	10	2,582	5/8	12	1,785	C58DG06TS	N18	L18

1. TVL = DL + Fv + ($0.2S_{DS}$/1.4 x Wp). All Terms Are Working Loads. Based On Eccentric Loading, 85% Of Total Load Allocated Per Inboard Rod.
2. Reductions In Actual Installed Brace Spacing Will Result In An Equal Percentage Reduction In Brace Reaction. As An Option When This Occurs ISAT May Substitute An Alternate Anchorage From Tables D1 or D2 Which Meets or Exceeds The Lowered Brace Reaction.
3. At Max. 50 Degree Brace Inclination.
4. Min. 3,000 psi NWC. Any "N Series" Connection May Be Utilized Having A Numeric Designation Equal To Or Higher Than That Shown.
5. Min. 3,000 psi NWC or LWC. Any "L Series" Connection May Be Utilized Having A Numeric Designation Equal To Or Higher Than That Shown.
6. As An Alternate, Brace Anchorage Connections To Structure May Be Employed Using Any Detail From Structural Connections Section "D" Series Details Where Assembly Design Value Meets Or Exceeds Brace Reaction.
7. For Trade Specific Bracing Installation Notes, Refer To Page 7.1.
8. Utilize Any "G" Series Vertical Support Connection Having A Design Value Equal To Or Greater Than The Corresponding "Rod Total Vertical Load".

REVIEWED FOR CODE COMPLIANCE
HCAI
OPM-0403
BY: William Staehlin
DATE: 01-26-2024
CALIFORNIA BUILDING CODES

REGISTERED PROFESSIONAL ENGINEER
MARCIN WASAZNIK
S 6612
STRUCTURAL
STATE OF CALIFORNIA

ISAT
A Division of Tomarco Contractor Specialties
International Seismic Application Technology
14848 Northam Street, La Mirada, CA 90638
877-999-4728 (Toll Free) 714-523-0845 (Fax)
www.isatsb.com

Rev. 1
11/19/18
Page
C38 -0.5-45
Inboard

CABLE BRACING REQUIREMENTS [7]

3-ROD TRAPEZED ELECTRICAL SYSTEMS (Conduit, Cable Tray, Bus Duct, Bus Way) — **MAXIMUM SEISMIC DESIGN FORCE = 0.50 G's**

Requires Use of ISAT Seismic Brackets. Use of Any Non-ISAT Bracket Voids Engineering. — *2013 California Building Code Compliant*

Maximum Trapeze Load (lbs/lf)	Max. Vertical Support Spacing (ft.)	Inboard [1, 8] Rod Total Vertical Load (lbs)	Min. [8] Vertical Support Rod Dia. (in.)	INBOARD LONGITUDINAL BRACING REQUIREMENTS				
				Max. [2] Brace Spacing Page D1	Brace [3] Reaction P Page D2	Min. Brace Assembly Page E3	Min. Brace Anchorage [6] Form Pour [4] Deck Page D1-03	Min. Brace Anchorage [6] Metal [5] Deck Page D2-03
				8-Way Transverse, Longitudinal Brace Pattern (B26.1)				
11.0	10	126	3/8	40	374	C38AA04WS	N4	L4
25.0	10	287	1/2	40	850	C12AA06WS	N9	L9
35.0	10	402	5/8	40	1,190	C58AA06WS	N12	L12
50.0	10	574	5/8	34	1,445	C58AA06WS	N15	L15
65.0	10	746	5/8	26	1,437	C58AA06WS	N15	L15
75.0	10	861	5/8	22	1,403	C58AA06WS	N15	L15
100.0	10	1,148	5/8	16	1,360	C58AA06WS	N14	L14
125.0	10	1,434	1/2	12	1,275	C12AA06WS	N13	L13
150.0	10	1,721	1/2	10	1,275	C12AA06WS	N13	L13

REVIEWED FOR CODE COMPLIANCE
HCAI
OPM-0403
BY: William Staehlin
DATE: 01/26/2024
CALIFORNIA BUILDING CODE, 2019

1. TVL = DL + Fv + ($0.2S_{DS}$/1.4 x Wp). All Terms Are Working Loads. Based On Eccentric Loading, 85% Of Total Load Allocated Per Inboard Rod.
2. Reductions In Actual Installed Brace Spacing Will Result In An Equal Percentage Reduction In Brace Reaction. As An Option When This Occurs ISAT May Substitute An Alternate Anchorage From Tables D1 or D2 Which Meets or Exceeds The Lowered Brace Reaction.
3. At Max. 60 Degree Brace Inclination.
4. Min. 3,000 psi NWC. Any "N Series" Connection May Be Utilized Having A Numeric Designation Equal To Or Higher Than That Shown.
5. Min. 3,000 psi NWC or LWC. Any "L Series" Connection May Be Utilized Having A Numeric Designation Equal To Or Higher Than That Shown.
6. As An Alternate, Brace Anchorage Connections To Structure May Be Employed Using Any Detail From Structural Connections Section "D" Series Details Where Assembly Design Value Meets Or Exceeds Brace Reaction.
7. For Trade Specific Bracing Installation Notes, Refer To Page 7.1.
8. Utilize Any "G" Series Vertical Support Connection Having A Design Value Equal To Or Greater Than The Corresponding "Rod Total Vertical Load".
9. Refer To C48.7A For Outboard Rod Bracing Requirements.

REGISTERED PROFESSIONAL ENGINEER MARCIN WASAZNIK S-6612 STRUCTURAL STATE OF CALIFORNIA

ISAT
A Division of Tomarco Contractor Specialties
International Seismic Application Technology
14848 Northam Street, La Mirada, CA 90638
877-999-4728 (Toll Free) 714-523-0845 (Fax)
www.isatsb.com

Rev. 1
11/19/18
Page
C38 -0.5-60
Inboard

CABLE BRACING REQUIREMENTS [7]

3-ROD TRAPEZED ELECTRICAL SYSTEMS (Conduit, Cable Tray, Bus Duct, Bus Way) — **MAXIMUM SEISMIC DESIGN FORCE = 0.75 G's**

Requires Use of ISAT Seismic Brackets. Use of Any Non-ISAT Bracket Voids Engineering. — *2013 California Building Code Compliant*

Maximum Trapeze Load (lbs/lf)	Max. Vertical Support Spacing (ft.)	Inboard [1, 8] Rod Total Vertical Load (lbs)	Min. [8] Vertical Support Rod Dia. (in.)	INBOARD LONGITUDINAL BRACING REQUIREMENTS				
				Max. [2] Brace Spacing (ft.)	Brace [3] Reaction P (lbs)	Min. Brace Assembly E - Pages	Min. Brace Anchorage [6] Form Pour [4] Deck Page D1	Min. Brace Anchorage [6] Metal [5] Deck Page D2
				8-Way Transverse, Longitudinal Brace Pattern (B26.1)				
11.0	10	126	3/8	40	324	C38AA04WS	N4	L4
25.0	10	287	1/2	40	736	C12AA06WS	N8	L8
35.0	10	402	1/2	40	1,031	C12AA06WS	N11	L11
50.0	10	574	1/2	38	1,399	C12AA06WS	N14	L14
65.0	10	746	1/2	30	1,435	C12AA06WS	N15	L15
75.0	10	861	1/2	26	1,435	C12AA06WS	N15	L15
100.0	10	1,148	1/2	18	1,325	C12AA06WS	N14	L14
125.0	10	1,434	1/2	14	1,288	C12AA06WS	N13	L13
150.0	10	1,721	1/2	12	1,325	C12AA06WS	N14	L14
175.0	10	2,008	1/2	10	1,288	C12AA06WS	N13	L13

REVIEWED FOR CODE COMPLIANCE
HCAI
OPM-0403
BY: William Staehlin
DATE: 01-26-24
CALIFORNIA BUILDING CODE, 2022

1. TVL = DL + Fv + ($0.2S_{DS}$/1.4 x Wp). All Terms Are Working Loads. Based On Eccentric Loading, 85% Of Total Load Allocated Per Inboard Rod.
2. Reductions In Actual Installed Brace Spacing Will Result In An Equal Percentage Reduction In Brace Reaction. As An Option When This Occurs ISAT May Substitute An Alternate Anchorage From Tables D1 or D2 Which Meets or Exceeds The Lowered Brace Reaction.
3. At Max. 30 Degree Brace Inclination.
4. Min. 3,000 psi NWC. Any "N Series" Connection May Be Utilized Having A Numeric Designation Equal To Or Higher Than That Shown.
5. Min. 3,000 psi NWC or LWC. Any "L Series" Connection May Be Utilized Having A Numeric Designation Equal To Or Higher Than That Shown.
6. As An Alternate, Brace Anchorage Connections To Structure May Be Employed Using Any Detail From Structural Connections Section "D" Series Details Where Assembly Design Value Meets Or Exceeds Brace Reaction.
7. For Trade Specific Bracing Installation Notes, Refer To Page 7.1.
8. Utilize Any "G" Series Vertical Support Connection Having A Design Value Equal To Or Greater Than The Corresponding "Rod Total Vertical Load".

REGISTERED PROFESSIONAL ENGINEER MARCIN WASAZNIK S-6612 STRUCTURAL STATE OF CALIFORNIA

ISAT
A Division of Tomarco Contractor Specialties
International Seismic Application Technology
14848 Northam Street, La Mirada, CA 90638
877-999-4728 (Toll Free) 714-523-0845 (Fax)
www.isatsb.com

Rev. 1
11/19/18
Page
C38 -0.75-30
Inboard

CABLE BRACING REQUIREMENTS [7]

3-ROD TRAPEZED ELECTRICAL SYSTEMS (Conduit, Cable Tray, Bus Duct, Bus Way) — **MAXIMUM SEISMIC DESIGN FORCE = 0.75 G's**

Requires Use of ISAT Seismic Brackets. Use of Any Non-ISAT Bracket Voids Engineering. — *2013 California Building Code Compliant*

Maximum Trapeze Load (lbs/lf)	Max. Vertical Support Spacing (ft.)	Inboard [1, 8] Rod Total Vertical Load (lbs)	Min. [8] Vertical Support Rod Dia. (in.)	INBOARD LONGITUDINAL BRACING REQUIREMENTS: Max. [2] Brace Spacing (ft.)	Brace [3] Reaction P (lbs)	Min. Brace Assembly E - Pages	Min. Brace Anchorage [6]: Form Pour [4] Deck Page D1	Min. Brace Anchorage [6]: Metal [5] Deck Page D2
				8-Way Transverse, Longitudinal Brace Pattern (B26.1)				
11.0	10	126	3/8	40	436	C38AA04WS	N5	L5
25.0	10	287	1/2	40	992	C12AA06WS	N10	L10
35.0	10	402	5/8	40	1,388	C58AA06WS	N14	L14
50.0	10	574	5/8	36	1,785	C58DG06TS	N18	L18
65.0	10	746	5/8	28	1,805	C58DG06TS	N19	L19
75.0	10	861	5/8	24	1,785	C58DG06TS	N18	L18
100.0	10	1,148	5/8	18	1,785	C58DG06TS	N18	L18
125.0	10	1,434	5/8	14	1,736	C58DG06TS	N18	L18
150.0	10	1,721	5/8	12	1,785	C58DG06TS	N18	L18
175.0	10	2,008	5/8	10	1,736	C58DG06TS	N18	L18

REVIEWED FOR CODE COMPLIANCE
HCAI
OPM-0403
BY: William Staehlin
DATE: 01-26-2024
CALIFORNIA BUILDING CODE, 2022

1. TVL = DL + Fv + ($0.2S_{DS}$/1.4 x Wp). All Terms Are Working Loads. Based On Eccentric Loading, 85% Of Total Load Allocated Per Inboard Rod.
2. Reductions In Actual Installed Brace Spacing Will Result In An Equal Percentage Reduction In Brace Reaction. As An Option When This Occurs ISAT May Substitute An Alternate Anchorage From Tables D1 or D2 Which Meets or Exceeds The Lowered Brace Reaction.
3. At Max. 50 Degree Brace Inclination.
4. Min. 3,000 psi NWC. Any "N Series" Connection May Be Utilized Having A Numeric Designation Equal To Or Higher Than That Shown.
5. Min. 3,000 psi NWC or LWC. Any "L Series" Connection May Be Utilized Having A Numeric Designation Equal To Or Higher Than That Shown.
6. As An Alternate, Brace Anchorage Connections To Structure May Be Employed Using Any Detail From Structural Connections Section "D" Series Details Where Assembly Design Value Meets Or Exceeds Brace Reaction.
7. For Trade Specific Bracing Installation Notes, Refer To Page 7.1.
8. Utilize Any "G" Series Vertical Support Connection Having A Design Value Equal To Or Greater Than The Corresponding "Rod Total Vertical Load".

REGISTERED PROFESSIONAL ENGINEER MARCIN WASAZNIK S-6612 STRUCTURAL STATE OF CALIFORNIA

ISAT
A Division of Tomarco Contractor Specialties
International Seismic Application Technology
14848 Northam Street, La Mirada, CA 90638
877-999-4728 (Toll Free) 714-523-0845 (Fax)
www.isatsb.com

Rev. 1
11/19/18
Page
C38 -0.75-45
Inboard

CABLE BRACING REQUIREMENTS [7]

3-ROD TRAPEZED ELECTRICAL SYSTEMS (Conduit, Cable Tray, Bus Duct, Bus Way) — **MAXIMUM SEISMIC DESIGN FORCE = 0.75 G's**

Requires Use of ISAT Seismic Brackets. Use of Any Non-ISAT Bracket Voids Engineering. — *2013 California Building Code Compliant*

Maximum Trapeze Load (lbs/lf)	Max. Vertical Support Spacing (ft.)	Inboard [1, 8] Rod Total Vertical Load (lbs)	Min. [8] Vertical Support Rod Dia. (in.)	INBOARD LONGITUDINAL BRACING REQUIREMENTS				
				Max. [2] Brace Spacing Page D1	Brace [3] Reaction P Page D2	Min. Brace Assembly Page E3	Min. Brace Anchorage [6] Form Pour [4] Deck Page D1-03	Min. Brace Anchorage [6] Metal [5] Deck Page D2-03
				8-Way Transverse, Longitudinal Brace Pattern (B26.1)				
11.0	10	126	1/2	40	561	C12AA04WS	N6	L6
25.0	10	287	5/8	46	1,466	C58AA06WS	N15	L15
35.0	10	402	5/8	32	1,428	C58AA06WS	N15	L15
50.0	10	574	5/8	22	1,403	C58AA06WS	N15	L15
65.0	10	746	5/8	16	1,326	C58AA06WS	N14	L14
75.0	10	861	5/8	14	1,339	C58AA06WS	N14	L14
100.0	10	1,148	5/8	10	1,275	C58AA06WS	N13	L13

1. TVL = DL + Fv + ($0.2S_{DS}$/1.4 x Wp). All Terms Are Working Loads. Based On Eccentric Loading, 85% Of Total Load Allocated Per Inboard Rod.
2. Reductions In Actual Installed Brace Spacing Will Result In An Equal Percentage Reduction In Brace Reaction. As An Option When This Occurs ISAT May Substitute An Alternate Anchorage From Tables D1 or D2 Which Meets or Exceeds The Lowered Brace Reaction.
3. At Max. 60 Degree Brace Inclination.
4. Min. 3,000 psi NWC. Any "N Series" Connection May Be Utilized Having A Numeric Designation Equal To Or Higher Than That Shown.
5. Min. 3,000 psi NWC or LWC. Any "L Series" Connection May Be Utilized Having A Numeric Designation Equal To Or Higher Than That Shown.
6. As An Alternate, Brace Anchorage Connections To Structure May Be Employed Using Any Detail From Structural Connections Section "D" Series Details Where Assembly Design Value Meets Or Exceeds Brace Reaction.
7. For Trade Specific Bracing Installation Notes, Refer To Page 7.1.
8. Utilize Any "G" Series Vertical Support Connection Having A Design Value Equal To Or Greater Than The Corresponding "Rod Total Vertical Load".
9. Refer To C48.7A For Outboard Rod Bracing Requirements.

REVIEWED FOR CODE COMPLIANCE
HCAI
OPM-0403
BY: William Staehlin
DATE: 01-26-2024
CALIFORNIA BUILDING CODE, 2022

REGISTERED PROFESSIONAL ENGINEER
MARCIN WASAZNIK
S 6612
STRUCTURAL
STATE OF CALIFORNIA

ISAT
A Division of Tomarco Contractor Specialties

International Seismic Application Technology
14848 Northam Street, La Mirada, CA 90638
877-999-4728 (Toll Free) 714-523-0845 (Fax)
www.isatsb.com

Rev. 1
11/19/18
Page
C38 -0.75-60
Inboard

CABLE BRACING REQUIREMENTS [7]

3-ROD TRAPEZED ELECTRICAL SYSTEMS (Conduit, Cable Tray, Bus Duct, Bus Way) — **MAXIMUM SEISMIC DESIGN FORCE = 1.00 G's**

Requires Use of ISAT Seismic Brackets. Use of Any Non-ISAT Bracket Voids Engineering. — *2013 California Building Code Compliant*

Maximum Trapeze Load (lbs/lf)	Max. Vertical Support Spacing (ft.)	Inboard [1, 8] Rod Total Vertical Load (lbs)	Min. [8] Vertical Support Rod Dia. (in.)	INBOARD LONGITUDINAL BRACING REQUIREMENTS				
				Max. [2] Brace Spacing (ft.)	Brace [3] Reaction P (lbs)	Min. Brace Assembly E - Pages	Min. Brace Anchorage [6] Form Pour [4] Deck Page D1	Min. Brace Anchorage [6] Metal [5] Deck Page D2
				8-Way Transverse, Longitudinal Brace Pattern (B26.1)				
11.0	10	126	3/8	40	432	C38AA04WS	N5	L5
25.0	10	287	1/2	40	981	C12AA06WS	N10	L10
35.0	10	402	1/2	40	1,374	C12AA06WS	N14	L14
50.0	10	574	1/2	28	1,374	C12AA06WS	N14	L14
65.0	10	746	1/2	22	1,404	C12AA06WS	N15	L15
75.0	10	861	1/2	18	1,325	C12AA06WS	N14	L14
100.0	10	1,148	1/2	14	1,374	C12AA06WS	N14	L14
125.0	10	1,434	1/2	10	1,227	C12AA06WS	N13	L13

1. TVL = DL + Fv + ($0.2S_{DS}$/1.4 x Wp). All Terms Are Working Loads. Based On Eccentric Loading, 85% Of Total Load Allocated Per Inboard Rod.
2. Reductions In Actual Installed Brace Spacing Will Result In An Equal Percentage Reduction In Brace Reaction. As An Option When This Occurs ISAT May Substitute An Alternate Anchorage From Tables D1 or D2 Which Meets or Exceeds The Lowered Brace Reaction.
3. At Max. 30 Degree Brace Inclination.
4. Min. 3,000 psi NWC. Any "N Series" Connection May Be Utilized Having A Numeric Designation Equal To Or Higher Than That Shown.
5. Min. 3,000 psi NWC or LWC. Any "L Series" Connection May Be Utilized Having A Numeric Designation Equal To Or Higher Than That Shown.
6. As An Alternate, Brace Anchorage Connections To Structure May Be Employed Using Any Detail From Structural Connections Section "D" Series Details Where Assembly Design Value Meets Or Exceeds Brace Reaction.
7. For Trade Specific Bracing Installation Notes, Refer To Page 7.1.
8. Utilize Any "G" Series Vertical Support Connection Having A Design Value Equal To Or Greater Than The Corresponding "Rod Total Vertical Load".

REVIEWED FOR CODE COMPLIANCE
HCAI
OPM-0403
BY: William Staehlin
DATE: 01-26-2024
CALIFORNIA BUILDING CODE, 2022

REGISTERED PROFESSIONAL ENGINEER MARCIN WASAZNIK S 6612 STRUCTURAL STATE OF CALIFORNIA

ISAT
A Division of Tomarco Contractor Specialties
International Seismic Application Technology
14848 Northam Street, La Mirada, CA 90638
877-999-4728 (Toll Free) 714-523-0845 (Fax)
www.isatsb.com

Rev. 1
11/19/18
Page
C38 -1-30
Inboard

CABLE BRACING REQUIREMENTS [7]

3-ROD TRAPEZED ELECTRICAL SYSTEMS (Conduit, Cable Tray, Bus Duct, Bus Way) — **MAXIMUM SEISMIC DESIGN FORCE = 1.00 G's**

Requires Use of ISAT Seismic Brackets. Use of Any Non-ISAT Bracket Voids Engineering. — *2013 California Building Code Compliant*

Maximum Trapeze Load (lbs/lf)	Max. Vertical Support Spacing (ft.)	Inboard [1, 8] Rod Total Vertical Load (lbs)	Min. [8] Vertical Support Rod Dia. (in.)	INBOARD LONGITUDINAL BRACING REQUIREMENTS				
				Max. [2] Brace Spacing (ft.)	Brace [3] Reaction P (lbs)	Min. Brace Assembly E - Pages	Min. Brace Anchorage [6] Form Pour [4] Deck Page D1	Min. Brace Anchorage [6] Metal [5] Deck Page D2
				8-Way Transverse, Longitudinal Brace Pattern (B26.1)				
11.0	10	126	1/2	40	582	C12AA04WS	N6	L6
25.0	10	287	5/8	40	1,322	C58AA06WS	N14	L14
35.0	10	402	5/8	38	1,759	C58DG06TS	N18	L18
50.0	10	574	5/8	26	1,719	C58DG06TS	N18	L18
65.0	10	746	5/8	20	1,719	C58DG06TS	N18	L18
75.0	10	861	5/8	18	1,785	C58DG06TS	N18	L18
100.0	10	1,148	5/8	12	1,587	C58DG06TS	N16	L16
125.0	10	1,434	5/8	10	1,653	C58DG06TS	N17	L17

1. TVL = DL + Fv + ($0.2S_{DS}$/1.4 x Wp). All Terms Are Working Loads. Based On Eccentric Loading, 85% Of Total Load Allocated Per Inboard Rod.
2. Reductions In Actual Installed Brace Spacing Will Result In An Equal Percentage Reduction In Brace Reaction. As An Option When This Occurs ISAT May Substitute An Alternate Anchorage From Tables D1 or D2 Which Meets or Exceeds The Lowered Brace Reaction.
3. At Max. 50 Degree Brace Inclination.
4. Min. 3,000 psi NWC. Any "N Series" Connection May Be Utilized Having A Numeric Designation Equal To Or Higher Than That Shown.
5. Min. 3,000 psi NWC or LWC. Any "L Series" Connection May Be Utilized Having A Numeric Designation Equal To Or Higher Than That Shown.
6. As An Alternate, Brace Anchorage Connections To Structure May Be Employed Using Any Detail From Structural Connections Section "D" Series Details Where Assembly Design Value Meets Or Exceeds Brace Reaction.
7. For Trade Specific Bracing Installation Notes, Refer To Page 7.1.
8. Utilize Any "G" Series Vertical Support Connection Having A Design Value Equal To Or Greater Than The Corresponding "Rod Total Vertical Load".

REVIEWED FOR CODE COMPLIANCE
HCAI
OPM-0403
BY: William Staehlin
DATE: 01-26-2024
CALIFORNIA BUILDING CODE, 2022

REGISTERED PROFESSIONAL ENGINEER MARCIN WASAZNIK S 6612 STRUCTURAL STATE OF CALIFORNIA

ISAT
A Division of Tomarco Contractor Specialties
International Seismic Application Technology
14848 Northam Street, La Mirada, CA 90638
877-999-4728 (Toll Free) 714-523-0845 (Fax)
www.isatsb.com

Rev. 1
11/19/18
Page
C38 -1-45
Inboard

CABLE BRACING REQUIREMENTS [7]

3-ROD TRAPEZED ELECTRICAL SYSTEMS (Conduit, Cable Tray, Bus Duct, Bus Way) — **MAXIMUM SEISMIC DESIGN FORCE = 1.00 G's**

Requires Use of ISAT Seismic Brackets. Use of Any Non-ISAT Bracket Voids Engineering. — *2013 California Building Code Compliant*

Maximum Trapeze Load (lbs/lf)	Max. Vertical Support Spacing (ft.)	Inboard [1, 8] Rod Total Vertical Load (lbs)	Min. [8] Vertical Support Rod Dia. (in.)	INBOARD LONGITUDINAL BRACING REQUIREMENTS: Max. [2] Brace Spacing Page D1	Brace [3] Reaction P Page D2	Min. Brace Assembly Page E3	Min. Brace Anchorage [6]: Form Pour [4] Deck Page D1-03	Min. Brace Anchorage [6]: Metal [5] Deck Page D2-03
				8-Way Transverse, Longitudinal Brace Pattern (B26.1)				
11.0	10	126	1/2	40	748	C12AA06WS	N8	L8
25.0	10	287	5/8	34	1,445	C58AA06WS	N15	L15
35.0	10	402	5/8	24	1,428	C58AA06WS	N15	L15
50.0	10	574	5/8	16	1,360	C58AA06WS	N14	L14
65.0	10	746	5/8	12	1,326	C58AA06WS	N14	L14
75.0	10	861	5/8	10	1,275	C58AA06WS	N13	L13

1. TVL = DL + Fv + ($0.2S_{DS}$/1.4 x Wp). All Terms Are Working Loads. Based On Eccentric Loading, 85% Of Total Load Allocated Per Inboard Rod.
2. Reductions In Actual Installed Brace Spacing Will Result In An Equal Percentage Reduction In Brace Reaction. As An Option When This Occurs ISAT May Substitute An Alternate Anchorage From Tables D1 or D2 Which Meets or Exceeds The Lowered Brace Reaction.
3. At Max. 60 Degree Brace Inclination.
4. Min. 3,000 psi NWC. Any "N Series" Connection May Be Utilized Having A Numeric Designation Equal To Or Higher Than That Shown.
5. Min. 3,000 psi NWC or LWC. Any "L Series" Connection May Be Utilized Having A Numeric Designation Equal To Or Higher Than That Shown.
6. As An Alternate, Brace Anchorage Connections To Structure May Be Employed Using Any Detail From Structural Connections Section "D" Series Details Where Assembly Design Value Meets Or Exceeds Brace Reaction.
7. For Trade Specific Bracing Installation Notes, Refer To Page 7.1.
8. Utilize Any "G" Series Vertical Support Connection Having A Design Value Equal To Or Greater Than The Corresponding "Rod Total Vertical Load".
9. Refer To C48.7A For Outboard Rod Bracing Requirements.

REVIEWED FOR CODE COMPLIANCE
OPM-0403
BY: William Staehlin
DATE: 01-26-2024
CALIFORNIA BUILDING CODE, 2022

REGISTERED PROFESSIONAL ENGINEER MARCIN WASAZNIK S-6612 STRUCTURAL STATE OF CALIFORNIA

ISAT
A Division of Tomarco Contractor Specialties
International Seismic Application Technology
14848 Northam Street, La Mirada, CA 90638
877-999-4728 (Toll Free) 714-523-0845 (Fax)
www.isatsb.com

Rev. 1
11/19/18
Page
C38 -1-60
Inboard

CABLE BRACING REQUIREMENTS [7]

3-ROD TRAPEZED ELECTRICAL SYSTEMS (Conduit, Cable Tray, Bus Duct, Bus Way) — **MAXIMUM SEISMIC DESIGN FORCE = 0.25 G's**

Requires Use of ISAT Seismic Brackets. Use of Any Non-ISAT Bracket Voids Engineering. — *2013 California Building Code Compliant*

Maximum Trapeze Load (lbs/lf)	Max. Vertical Support Spacing (ft.)	Outboard [1, 8] Rod Total Vertical Load (lbs)	Min. [8] Vertical Support Rod Dia. (in.)	OUTBOARD TRANSVERSE BRACING REQUIREMENTS					OUTBOARD LONGITUDINAL BRACING REQUIREMENTS				
				Max. [2] Brace Spacing (ft.)	Brace [3] Reaction P (lbs)	Min. Brace Assembly E - Pages	Min. Brace Anchorage [6] Form Pour [4] Deck Page D1	Min. Brace Anchorage [6] Metal [5] Deck Page D2	Max. [2] Brace Spacing (ft.)	Brace [3] Reaction P (lbs)	Min. Brace Assembly E - Pages	Min. Brace Anchorage [6] Form Pour [4] Deck Page D1	Min. Brace Anchorage [6] Metal [5] Deck Page D2
				2-Way Transverse Brace Pattern (B26.0)					8-Way Transverse, Longitudinal Brace Pattern (B26.1)				
11.0	10	37	3/8	40	127	C38AA04WS	N2	L2	80	64	C38AA04WS	N1	L1
25.0	10	84	1/2	40	289	C12AA04WS	N3	L3	80	144	C12AA04WS	N2	L2
35.0	10	118	1/2	40	404	C12AA04WS	N5	L5	80	202	C12AA04WS	N3	L3
50.0	10	169	1/2	40	577	C12AA04WS	N6	L6	80	289	C12AA04WS	N3	L3
65.0	10	219	1/2	40	751	C12AA06WS	N8	L8	80	375	C12AA04WS	N4	L4
75.0	10	253	1/2	40	866	C12AA06WS	N9	L9	80	433	C12AA04WS	N5	L5
100.0	10	338	1/2	40	1,155	C12AA06WS	N12	L12	80	577	C12AA04WS	N6	L6
125.0	10	422	1/2	40	1,443	C12AA06WS	N15	L15	80	722	C12AA06WS	N8	L8
				OUTBOARD TRANS., LONGITUDINAL BRACING REQUIREMENTS [9]									
				8-Way Transverse, Longitudinal Brace Pattern (B26.1)									
150.0	10	506	1/2	33	1,429	C12AA06WS	N15	L15					
175.0	10	591	1/2	28	1,415	C12AA06WS	N15	L15					
200.0	10	675	1/2	25	1,443	C12AA06WS	N15	L15					
225.0	10	759	1/2	22	1,429	C12AA06WS	N15	L15					

1. TVL = DL + Fv + ($0.2S_{DS}$/1.4 x Wp). All Terms Are Working Loads. Based On Eccentric Loading, 25% Of Total Load Allocated Per Outboard Rod.
2. Reductions In Actual Installed Brace Spacing Will Result In An Equal Percentage Reduction In Brace Reaction. As An Option When This Occurs ISAT May Substitute An Alternate Anchorage From Tables D1 or D2 Which Meets or Exceeds The Lowered Brace Reaction.
3. At Max. 30 Degree Brace Inclination.
4. Min. 3,000 psi NWC. Any "N Series" Connection May Be Utilized Having A Numeric Designation Equal To Or Higher Than That Shown.
5. Min. 3,000 psi NWC or LWC. Any "L Series" Connection May Be Utilized Having A Numeric Designation Equal To Or Higher Than That Shown.
6. As An Alternate, Brace Anchorage Connections To Structure May Be Employed Using Any Detail From Structural Connections Section "D" Series Details Where Assembly Design Value Meets Or Exceeds Brace Reaction.
7. For Trade Specific Bracing Installation Notes, Refer To Page 7.1.
8. Utilize Any "G" Series Vertical Support Connection Having A Design Value Equal To Or Greater Than The Corresponding "Rod Total Vertical Load".

REVIEWED FOR CODE COMPLIANCE
OPM-0403
By: William Staehlin
DATE: 01-26-2024
CALIFORNIA BUILDING CODE

REGISTERED PROFESSIONAL ENGINEER
MARCIN WASAZNIK
S 6612
STRUCTURAL
STATE OF CALIFORNIA

ISAT
A Division of Tomarco Contractor Specialties

International Seismic Application Technology
14848 Northam Street, La Mirada, CA 90638
877-999-4728 (Toll Free) 714-523-0845 (Fax)
www.isatsb.com

Rev. 0
8/03/18
Page
C38-0.25-30
Outboard

CABLE BRACING REQUIREMENTS [7]

3-ROD TRAPEZED ELECTRICAL SYSTEMS (Conduit, Cable Tray, Bus Duct, Bus Way) — **MAXIMUM SEISMIC DESIGN FORCE = 0.25 G's**

Requires Use of ISAT Seismic Brackets. Use of Any Non-ISAT Bracket Voids Engineering. — *2013 California Building Code Compliant*

Maximum Trapeze Load (lbs/lf)	Max. Vertical Support Spacing (ft.)	Outboard [1, 8] Rod Total Vertical Load (lbs)	Min. [8] Vertical Support Rod Dia. (in.)	OUTBOARD TRANSVERSE BRACING REQUIREMENTS					OUTBOARD LONGITUDINAL BRACING REQUIREMENTS				
				Max. [2] Brace Spacing (ft.)	Brace [3] Reaction P (lbs)	Min. Brace Assembly E - Pages	Min. Brace Anchorage [6] Form Pour [4] Deck Page D1	Min. Brace Anchorage [6] Metal [5] Deck Page D2	Max. [2] Brace Spacing (ft.)	Brace [3] Reaction P (lbs)	Min. Brace Assembly E - Pages	Min. Brace Anchorage [6] Form Pour [4] Deck Page D1	Min. Brace Anchorage [6] Metal [5] Deck Page D2
				2-Way Transverse Brace Pattern (B26.0)					8-Way Transverse, Longitudinal Brace Pattern (B26.1)				
11.0	10	37	3/8	40	171	C38AA04WS	N2	L2	80	86	C38AA04WS	N1	L1
25.0	10	84	1/2	40	389	C12AA04WS	N4	L4	80	194	C12AA04WS	N2	L2
35.0	10	118	1/2	40	545	C12AA04WS	N6	L6	80	272	C12AA04WS	N3	L3
50.0	10	169	1/2	40	778	C12AA06WS	N8	L8	80	389	C12AA04WS	N4	L4
65.0	10	219	1/2	40	1,011	C12AA06WS	N11	L11	80	506	C12AA04WS	N6	L6
75.0	10	253	1/2	40	1,167	C12AA06WS	N12	L12	80	583	C12AA04WS	N6	L6
100.0	10	338	5/8	40	1,556	C58DG06TS	N16	L16	80	778	C58AA06WS	N8	L8
				OUTBOARD TRANS., LONGITUDINAL BRACING REQUIREMENTS [9]									
				8-Way Transverse, Longitudinal Brace Pattern (B26.1)									
125.0	10	422	5/8	36	1,750	C58DG06TS	N18	L18					
150.0	10	506	5/8	30	1,750	C58DG06TS	N18	L18					
175.0	10	591	5/8	26	1,770	C58DG06TS	N18	L18					
200.0	10	675	5/8	23	1,789	C58DG06TS	N18	L18					
225.0	10	759	5/8	20	1,750	C58DG06TS	N18	L18					

1. TVL = DL + Fv + ($0.2S_{DS}$/1.4 x Wp). All Terms Are Working Loads. Based On Eccentric Loading, 25% Of Total Load Allocated Per Outboard Rod.
2. Reductions In Actual Installed Brace Spacing Will Result In An Equal Percentage Reduction In Brace Reaction. As An Option When This Occurs ISAT May Substitute An Alternate Anchorage From Tables D1 or D2 Which Meets or Exceeds The Lowered Brace Reaction.
3. At Max. 50 Degree Brace Inclination.
4. Min. 3,000 psi NWC. Any "N Series" Connection May Be Utilized Having A Numeric Designation Equal To Or Higher Than That Shown.
5. Min. 3,000 psi NWC or LWC. Any "L Series" Connection May Be Utilized Having A Numeric Designation Equal To Or Higher Than That Shown.
6. As An Alternate, Brace Anchorage Connections To Structure May Be Employed Using Any Detail From Structural Connections Section "D" Series Details Where Assembly Design Value Meets Or Exceeds Brace Reaction.
7. For Trade Specific Bracing Installation Notes, Refer To Page 7.1.
8. Utilize Any "G" Series Vertical Support Connection Having A Design Value Equal To Or Greater Than The Corresponding "Rod Total Vertical Load".

REVIEWED FOR CODE COMPLIANCE
OPM-0403
BY: William Staehlin
DATE: 01-26-2024
CALIFORNIA BUILDING CODE

REGISTERED PROFESSIONAL ENGINEER
MARCIN WASAZNIK
S 6612
STRUCTURAL
STATE OF CALIFORNIA

ISAT
A Division of Tomarco Contractor Specialties
International Seismic Application Technology
14848 Northam Street, La Mirada, CA 90638
877-999-4728 (Toll Free) 714-523-0845 (Fax)
www.isatsb.com

Rev. 0
8/03/18
Page
C38-0.25-45
Outboard

CABLE BRACING REQUIREMENTS [7]

3-ROD TRAPEZED ELECTRICAL SYSTEMS (Conduit, Cable Tray, Bus Duct, Bus Way) — **MAXIMUM SEISMIC DESIGN FORCE = 0.25 G's**

Requires Use of ISAT Seismic Brackets. Use of Any Non-ISAT Bracket Voids Engineering. — *2013 California Building Code Compliant*

Maximum Trapeze Load (lbs/lf)	Max. Vertical Support Spacing (ft.)	Outboard [1, 8] Rod Total Vertical Load (lbs)	Min. [8] Vertical Support Rod Dia. (in.)	OUTBOARD TRANSVERSE BRACING REQUIREMENTS					OUTBOARD LONGITUDINAL BRACING REQUIREMENTS [9]				
				Max. [2] Brace Spacing (ft.)	Brace [3] Reaction P (lbs)	Min. Brace Assembly E - Pages	Min. Brace Anchorage [6] Form Pour [4] Deck Page D1	Min. Brace Anchorage [6] Metal [5] Deck Page D2	Max. [2] Brace Spacing (ft.)	Brace [3] Reaction P (lbs)	Min. Brace Assembly E - Pages	Min. Brace Anchorage [6] Form Pour [4] Deck Page D1	Min. Brace Anchorage [6] Metal [5] Deck Page D2
				2-Way Transverse Brace Pattern (B26.0)					8-Way Transverse, Longitudinal Brace Pattern (B26.1)				
11.0	10	37	3/8	40	220	C38AA04WS	N3	L3	80	110	C38AA04WS	N2	L2
25.0	10	84	1/2	40	500	C12AA04WS	N5	L5	80	250	C12AA04WS	N3	L3
35.0	10	118	1/2	40	700	C12AA06WS	N7	L7	80	350	C12AA04WS	N4	L4
50.0	10	169	1/2	40	1,000	C12AA06WS	N10	L10	80	500	C12AA04WS	N5	L5
65.0	10	219	5/8	40	1,300	C58AA06WS	N13	L13	80	650	C58AA04WS	N7	L7
75.0	10	253	3/4	40	1,500	C34DG06TS	N15	L15	80	750	C34DG06WS	N8	L8
				OUTBOARD TRANS., LONGITUDINAL BRACING REQUIREMENTS [9]									
				8-Way Transverse, Longitudinal Brace Pattern (B26.1)									
100.0	10	338	5/8	29	1,450	C58AA06WS	N15	L15					
125.0	10	422	5/8	23	1,438	C58AA06WS	N15	L15					
150.0	10	506	5/8	19	1,425	C58AA06WS	N15	L15					
175.0	10	591	5/8	16	1,400	C58AA06WS	N14	L14					
200.0	10	675	5/8	14	1,400	C58AA06WS	N14	L14					
225.0	10	759	5/8	13	1,463	C58AA06WS	N15	L15					

1. TVL = DL + Fv + ($0.2S_{DS}$/1.4 x Wp). All Terms Are Working Loads. Based On Eccentric Loading, 25% Of Total Load Allocated Per Outboard Rod.
2. Reductions In Actual Installed Brace Spacing Will Result In An Equal Percentage Reduction In Brace Reaction. As An Option When This Occurs ISAT May Substitute An Alternate Anchorage From Tables D1 or D2 Which Meets or Exceeds The Lowered Brace Reaction.
3. At Max. 60 Degree Brace Inclination.
4. Min. 3,000 psi NWC. Any "N Series" Connection May Be Utilized Having A Numeric Designation Equal To Or Higher Than That Shown.
5. Min. 3,000 psi NWC or LWC. Any "L Series" Connection May Be Utilized Having A Numeric Designation Equal To Or Higher Than That Shown.
6. As An Alternate, Brace Anchorage Connections To Structure May Be Employed Using Any Detail From Structural Connections Section "D" Series Details Where Assembly Design Value Meets Or Exceeds Brace Reaction.
7. For Trade Specific Bracing Installation Notes, Refer To Page 7.1.
8. Utilize Any "G" Series Vertical Support Connection Having A Design Value Equal To Or Greater Than The Corresponding "Rod Total Vertical Load".
9. Refer To C48.7B For Inboard Rod Bracing Requirements.

REVIEWED FOR CODE COMPLIANCE OPM-0403 By William Staehlin DATE: 01-26-2024 CALIFORNIA BUILDING CODE

REGISTERED PROFESSIONAL ENGINEER MARCIN WASAZNIK S-6612 STRUCTURAL STATE OF CALIFORNIA

International Seismic Application Technology
14848 Northam Street, La Mirada, CA 90638
877-999-4728 (Toll Free) 714-523-0845 (Fax)
www.isatsb.com
A Division of Tomarco Contractor Specialties

Rev. 1
03/12/19

Page
C38-0.25-60
Outboard

CABLE BRACING REQUIREMENTS [7]

3-ROD TRAPEZED ELECTRICAL SYSTEMS (Conduit, Cable Tray, Bus Duct, Bus Way) — **MAXIMUM SEISMIC DESIGN FORCE = 0.50 G's**

Requires Use of ISAT Seismic Brackets. Use of Any Non-ISAT Bracket Voids Engineering. — *2013 California Building Code Compliant*

Maximum Trapeze Load (lbs/lf)	Max. Vertical Support Spacing (ft.)	Outboard [1, 8] Rod Total Vertical Load (lbs)	Min. [8] Vertical Support Rod Dia. (in.)	OUTBOARD TRANSVERSE BRACING REQUIREMENTS: Max. [2] Brace Spacing (ft.)	Brace [3] Reaction P (lbs)	Min. Brace Assembly E - Pages	Min. Brace Anchorage [6]: Form Pour [4] Deck Page D1	Min. Brace Anchorage [6]: Metal [5] Deck Page D2	OUTBOARD LONGITUDINAL BRACING REQUIREMENTS: Max. [2] Brace Spacing (ft.)	Brace [3] Reaction P (lbs)	Min. Brace Assembly E - Pages	Min. Brace Anchorage [6]: Form Pour [4] Deck Page D1	Min. Brace Anchorage [6]: Metal [5] Deck Page D2
				2-Way Transverse Brace Pattern (B26.0)					8-Way Transverse, Longitudinal Brace Pattern (B26.1)				
11.0	10	37	3/8	40	254	C38AA04WS	N3	L3	80	127	C38AA04WS	N2	L2
25.0	10	84	1/2	40	577	C12AA04WS	N6	L6	80	289	C12AA04WS	N3	L3
35.0	10	118	1/2	40	808	C12AA06WS	N9	L9	80	404	C12AA04WS	N5	L5
50.0	10	169	1/2	40	1,155	C12AA06WS	N12	L12	80	577	C12AA04WS	N6	L6
				OUTBOARD TRANS., LONGITUDINAL BRACING REQUIREMENTS [9]									
				8-Way Transverse, Longitudinal Brace Pattern (B26.1)									
65.0	10	219	1/2	38	1,426	C12AA06WS	N15	L15					
75.0	10	253	1/2	33	1,429	C12AA06WS	N15	L15					
100.0	10	338	1/2	25	1,443	C12AA06WS	N15	L15					
125.0	10	422	1/2	20	1,443	C12AA06WS	N15	L15					
150.0	10	506	1/2	16	1,386	C12AA06WS	N14	L14					
175.0	10	591	1/2	14	1,415	C12AA06WS	N15	L15					
200.0	10	675	1/2	12	1,386	C12AA06WS	N14	L14					
225.0	10	759	1/2	11	1,429	C12AA06WS	N15	L15					

1. TVL = DL + Fv + ($0.2S_{DS}$/1.4 x Wp). All Terms Are Working Loads. Based On Eccentric Loading, 25% Of Total Load Allocated Per Outboard Rod.
2. Reductions In Actual Installed Brace Spacing Will Result In An Equal Percentage Reduction In Brace Reaction. As An Option When This Occurs ISAT May Substitute An Alternate Anchorage From Tables D1 or D2 Which Meets or Exceeds The Lowered Brace Reaction.
3. At Max. 30 Degree Brace Inclination.
4. Min. 3,000 psi NWC. Any "N Series" Connection May Be Utilized Having A Numeric Designation Equal To Or Higher Than That Shown.
5. Min. 3,000 psi NWC or LWC. Any "L Series" Connection May Be Utilized Having A Numeric Designation Equal To Or Higher Than That Shown.
6. As An Alternate, Brace Anchorage Connections To Structure May Be Employed Using Any Detail From Structural Connections Section "D" Series Details Where Assembly Design Value Meets Or Exceeds Brace Reaction.
7. For Trade Specific Bracing Installation Notes, Refer To Page 7.1.
8. Utilize Any "G" Series Vertical Support Connection Having A Design Value Equal To Or Greater Than The Corresponding "Rod Total Vertical Load".

REVIEWED FOR CODE COMPLIANCE
OPM-0403
BY: William Staehlin
DATE: 01-26-2024
CALIFORNIA BUILDING CODE 2022

REGISTERED PROFESSIONAL ENGINEER MARCIN WASAZNIK S 6612 STRUCTURAL STATE OF CALIFORNIA

ISAT
A Division of Tomarco Contractor Specialties
International Seismic Application Technology
14848 Northam Street, La Mirada, CA 90638
877-999-4728 (Toll Free) 714-523-0845 (Fax)
www.isatsb.com

Rev. 0
8/03/18
Page
C38-0.5-30
Outboard

CABLE BRACING REQUIREMENTS [7]

3-ROD TRAPEZED ELECTRICAL SYSTEMS (Conduit, Cable Tray, Bus Duct, Bus Way) — **MAXIMUM SEISMIC DESIGN FORCE = 0.50 G's**

Requires Use of ISAT Seismic Brackets. Use of Any Non-ISAT Bracket Voids Engineering. — *2013 California Building Code Compliant*

Maximum Trapeze Load (lbs/lf)	Max. Vertical Support Spacing (ft.)	Outboard [1, 8] Rod Total Vertical Load (lbs)	Min. [8] Vertical Support Rod Dia. (in.)	OUTBOARD TRANSVERSE BRACING REQUIREMENTS					OUTBOARD LONGITUDINAL BRACING REQUIREMENTS				
				Max. [2] Brace Spacing (ft.)	Brace [3] Reaction P (lbs)	Min. Brace Assembly E - Pages	Min. Brace Anchorage [6] Form Pour [4] Deck Page D1	Min. Brace Anchorage [6] Metal [5] Deck Page D2	Max. [2] Brace Spacing (ft.)	Brace [3] Reaction P (lbs)	Min. Brace Assembly E - Pages	Min. Brace Anchorage [6] Form Pour [4] Deck Page D1	Min. Brace Anchorage [6] Metal [5] Deck Page D2
				2-Way Transverse Brace Pattern (B26.0)					8-Way Transverse, Longitudinal Brace Pattern (B26.1)				
11.0	10	37	3/8	40	342	C38AA04WS	N4	L4	80	171	C38AA04WS	N2	L2
25.0	10	84	1/2	40	778	C12AA06WS	N8	L8	80	389	C12AA04WS	N4	L4
35.0	10	118	1/2	40	1,089	C12AA06WS	N11	L11	80	545	C12AA04WS	N6	L6
50.0	10	169	5/8	40	1,556	C58DG06TS	N16	L16	80	778	C58AA06WS	N8	L8
				OUTBOARD TRANS., LONGITUDINAL BRACING REQUIREMENTS [9]									
				8-Way Transverse, Longitudinal Brace Pattern (B26.1)									
65.0	10	219	5/8	35	1,770	C58DG06TS	N18	L18					
75.0	10	253	5/8	30	1,750	C58DG06TS	N18	L18					
100.0	10	338	5/8	22	1,711	C58DG06TS	N18	L18					
125.0	10	422	5/8	18	1,750	C58DG06TS	N18	L18					
150.0	10	506	5/8	15	1,750	C58DG06TS	N18	L18					
175.0	10	591	5/8	13	1,770	C58DG06TS	N18	L18					
200.0	10	675	5/8	11	1,711	C58DG06TS	N18	L18					
225.0	10	759	5/8	10	1,750	C58DG06TS	N18	L18					

1. TVL = DL + Fv + ($0.2S_{DS}$/1.4 x Wp). All Terms Are Working Loads. Based On Eccentric Loading, 25% Of Total Load Allocated Per Outboard Rod.
2. Reductions In Actual Installed Brace Spacing Will Result In An Equal Percentage Reduction In Brace Reaction. As An Option When This Occurs ISAT May Substitute An Alternate Anchorage From Tables D1 or D2 Which Meets or Exceeds The Lowered Brace Reaction.
3. At Max. 50 Degree Brace Inclination.
4. Min. 3,000 psi NWC. Any "N Series" Connection May Be Utilized Having A Numeric Designation Equal To Or Higher Than That Shown.
5. Min. 3,000 psi NWC or LWC. Any "L Series" Connection May Be Utilized Having A Numeric Designation Equal To Or Higher Than That Shown.
6. As An Alternate, Brace Anchorage Connections To Structure May Be Employed Using Any Detail From Structural Connections Section "D" Series Details Where Assembly Design Value Meets Or Exceeds Brace Reaction.
7. For Trade Specific Bracing Installation Notes, Refer To Page 7.1.
8. Utilize Any "G" Series Vertical Support Connection Having A Design Value Equal To Or Greater Than The Corresponding "Rod Total Vertical Load".

REVIEWED FOR CODE COMPLIANCE
OPM-0403
By: William Staehlin
DATE: 01-26-2024
CALIFORNIA BUILDING CODE

REGISTERED PROFESSIONAL ENGINEER MARCIN WASAZNIK S-6612 STRUCTURAL STATE OF CALIFORNIA

ISAT
A Division of Tomarco Contractor Specialties
International Seismic Application Technology
14848 Northam Street, La Mirada, CA 90638
877-999-4728 (Toll Free) 714-523-0845 (Fax)
www.isatsb.com

Rev. 0
8/03/18
Page
C38-0.5-45
Outboard

CABLE BRACING REQUIREMENTS [7]

3-ROD TRAPEZED ELECTRICAL SYSTEMS (Conduit, Cable Tray, Bus Duct, Bus Way) — **MAXIMUM SEISMIC DESIGN FORCE = 0.50 G's**

Requires Use of ISAT Seismic Brackets. Use of Any Non-ISAT Bracket Voids Engineering. — *2013 California Building Code Compliant*

Maximum Trapeze Load (lbs/lf)	Max. Vertical Support Spacing (ft.)	Outboard [1, 8] Rod Total Vertical Load (lbs)	Min. [8] Vertical Support Rod Dia. (in.)	OUTBOARD TRANSVERSE BRACING REQUIREMENTS					OUTBOARD LONGITUDINAL BRACING REQUIREMENTS [9]				
				Max. [2] Brace Spacing (ft.)	Brace [3] Reaction P (lbs)	Min. Brace Assembly E - Pages	Min. Brace Anchorage [6] Form Pour [4] Deck Page D1	Min. Brace Anchorage [6] Metal [5] Deck Page D2	Max. [2] Brace Spacing (ft.)	Brace [3] Reaction P (lbs)	Min. Brace Assembly E - Pages	Min. Brace Anchorage [6] Form Pour [4] Deck Page D1	Min. Brace Anchorage [6] Metal [5] Deck Page D2
				2-Way Transverse Brace Pattern (B26.0)					8-Way Transverse, Longitudinal Brace Pattern (B26.1)				
11.0	10	37	1/2	40	440	C12AA04WS	N5	L5	80	220	C12AA04WS	N3	L3
25.0	10	84	1/2	40	1,000	C12AA06WS	N10	L10	80	500	C12AA04WS	N5	L5
35.0	10	118	5/8	40	1,400	C58AA06WS	N14	L14	80	700	C58AA06WS	N7	L7
				OUTBOARD TRANS., LONGITUDINAL BRACING REQUIREMENTS [9]									
				8-Way Transverse, Longitudinal Brace Pattern (B26.1)									
50.0	10	169	5/8	29	1,450	C58AA06WS	N15	L15					
65.0	10	219	5/8	22	1,430	C58AA06WS	N15	L15					
75.0	10	253	5/8	19	1,425	C58AA06WS	N15	L15					
100.0	10	338	5/8	14	1,400	C58AA06WS	N14	L14					
125.0	10	422	5/8	11	1,375	C58AA06WS	N14	L14					

1. TVL = DL + Fv + ($0.2S_{DS}$/1.4 x Wp). All Terms Are Working Loads. Based On Eccentric Loading, 25% Of Total Load Allocated Per Outboard Rod.
2. Reductions In Actual Installed Brace Spacing Will Result In An Equal Percentage Reduction In Brace Reaction. As An Option When This Occurs ISAT May Substitute An Alternate Anchorage From Tables D1 or D2 Which Meets or Exceeds The Lowered Brace Reaction.
3. At Max. 60 Degree Brace Inclination.
4. Min. 3,000 psi NWC. Any "N Series" Connection May Be Utilized Having A Numeric Designation Equal To Or Higher Than That Shown.
5. Min. 3,000 psi NWC or LWC. Any "L Series" Connection May Be Utilized Having A Numeric Designation Equal To Or Higher Than That Shown.
6. As An Alternate, Brace Anchorage Connections To Structure May Be Employed Using Any Detail From Structural Connections Section "D" Series Details Where Assembly Design Value Meets Or Exceeds Brace Reaction.
7. For Trade Specific Bracing Installation Notes, Refer To Page 7.1.
8. Utilize Any "G" Series Vertical Support Connection Having A Design Value Equal To Or Greater Than The Corresponding "Rod Total Vertical Load".
9. Refer To C48.7B For Inboard Rod Bracing Requirements.

REVIEWED FOR CODE COMPLIANCE
OPM 0403
BY: William Staehlin
DATE: 01-26-2024
CALIFORNIA BUILDING CODE, 2019

REGISTERED PROFESSIONAL ENGINEER MARCIN WASAZNIK S-6612 STRUCTURAL STATE OF CALIFORNIA

ISAT
A Division of Tomarco Contractor Specialties

International Seismic Application Technology
14848 Northam Street, La Mirada, CA 90638
877-999-4728 (Toll Free) 714-523-0845 (Fax)
www.isatsb.com

Rev. 0
8/03/18

Page
C38-0.5-60
Outboard

CABLE BRACING REQUIREMENTS [7]

3-ROD TRAPEZED ELECTRICAL SYSTEMS (Conduit, Cable Tray, Bus Duct, Bus Way) — **MAXIMUM SEISMIC DESIGN FORCE = 0.75 G's**

Requires Use of ISAT Seismic Brackets. Use of Any Non-ISAT Bracket Voids Engineering. — *2013 California Building Code Compliant*

Maximum Trapeze Load (lbs/lf)	Max. Vertical Support Spacing (ft.)	Outboard [1, 8] Rod Total Vertical Load (lbs)	Min. [8] Vertical Support Rod Dia. (in.)	OUTBOARD TRANSVERSE BRACING REQUIREMENTS					OUTBOARD LONGITUDINAL BRACING REQUIREMENTS				
				Max. [2] Brace Spacing (ft.)	Brace [3] Reaction P (lbs)	Min. Brace Assembly E - Pages	Min. Brace Anchorage [6] Form Pour [4] Deck Page D1	Min. Brace Anchorage [6] Metal [5] Deck Page D2	Max. [2] Brace Spacing (ft.)	Brace [3] Reaction P (lbs)	Min. Brace Assembly E - Pages	Min. Brace Anchorage [6] Form Pour [4] Deck Page D1	Min. Brace Anchorage [6] Metal [5] Deck Page D2
				2-Way Transverse Brace Pattern (B26.0)					8-Way Transverse, Longitudinal Brace Pattern (B26.1)				
11.0	10	37	3/8	40	381	C38AA04WS	N4	L4	80	191	C38AA04WS	N2	L2
25.0	10	84	1/2	40	866	C12AA06WS	N9	L9	80	433	C12AA04WS	N5	L5
35.0	10	118	1/2	40	1,212	C12AA06WS	N13	L13	80	606	C12AA04WS	N7	L7
				OUTBOARD TRANS., LONGITUDINAL BRACING REQUIREMENTS [9]									
				8-Way Transverse, Longitudinal Brace Pattern (B26.1)									
50.0	10	169	1/2	33	1,429	C12AA06WS	N15	L15					
65.0	10	219	1/2	25	1,407	C12AA06WS	N15	L15					
75.0	10	253	1/2	22	1,429	C12AA06WS	N15	L15					
100.0	10	338	1/2	16	1,386	C12AA06WS	N14	L14					
125.0	10	422	1/2	13	1,407	C12AA06WS	N15	L15					
150.0	10	506	1/2	11	1,429	C12AA06WS	N15	L15					

1. TVL = DL + Fv + ($0.2S_{DS}$/1.4 x Wp). All Terms Are Working Loads. Based On Eccentric Loading, 25% Of Total Load Allocated Per Outboard Rod.
2. Reductions In Actual Installed Brace Spacing Will Result In An Equal Percentage Reduction In Brace Reaction. As An Option When This Occurs ISAT May Substitute An Alternate Anchorage From Tables D1 or D2 Which Meets or Exceeds The Lowered Brace Reaction.
3. At Max. 30 Degree Brace Inclination.
4. Min. 3,000 psi NWC. Any "N Series" Connection May Be Utilized Having A Numeric Designation Equal To Or Higher Than That Shown.
5. Min. 3,000 psi NWC or LWC. Any "L Series" Connection May Be Utilized Having A Numeric Designation Equal To Or Higher Than That Shown.
6. As An Alternate, Brace Anchorage Connections To Structure May Be Employed Using Any Detail From Structural Connections Section "D" Series Details Where Assembly Design Value Meets Or Exceeds Brace Reaction.
7. For Trade Specific Bracing Installation Notes, Refer To Page 7.1.
8. Utilize Any "G" Series Vertical Support Connection Having A Design Value Equal To Or Greater Than The Corresponding "Rod Total Vertical Load".

REVIEWED FOR CODE COMPLIANCE
OPM-0403
BY: William Staehlin
DATE: 01-26-2024
CALIFORNIA BUILDING CODE, 2019

REGISTERED PROFESSIONAL ENGINEER
MARCIN WASAZNIK
S-6612
STRUCTURAL
STATE OF CALIFORNIA

ISAT
A Division of Tomarco Contractor Specialties

International Seismic Application Technology
14848 Northam Street, La Mirada, CA 90638
877-999-4728 (Toll Free) 714-523-0845 (Fax)
www.isatsb.com

Rev. 0

8/03/18

Page

C38-0.75-30

Outboard

CABLE BRACING REQUIREMENTS [7]

3-ROD TRAPEZED ELECTRICAL SYSTEMS (Conduit, Cable Tray, Bus Duct, Bus Way) — **MAXIMUM SEISMIC DESIGN FORCE = 0.75 G's**

Requires Use of ISAT Seismic Brackets. Use of Any Non-ISAT Bracket Voids Engineering. — *2013 California Building Code Compliant*

Maximum Trapeze Load (lbs/lf)	Max. Vertical Support Spacing (ft.)	Outboard [1, 8] Rod Total Vertical Load (lbs)	Min. [8] Vertical Support Rod Dia. (in.)	OUTBOARD TRANSVERSE BRACING REQUIREMENTS					OUTBOARD LONGITUDINAL BRACING REQUIREMENTS				
				Max. [2] Brace Spacing (ft.)	Brace [3] Reaction P (lbs)	Min. Brace Assembly E - Pages	Min. Brace Anchorage [6] Form Pour [4] Deck Page D1	Min. Brace Anchorage [6] Metal [5] Deck Page D2	Max. [2] Brace Spacing (ft.)	Brace [3] Reaction P (lbs)	Min. Brace Assembly E - Pages	Min. Brace Anchorage [6] Form Pour [4] Deck Page D1	Min. Brace Anchorage [6] Metal [5] Deck Page D2
				2-Way Transverse Brace Pattern (B26.0)					8-Way Transverse, Longitudinal Brace Pattern (B26.1)				
11.0	10	37	1/2	40	513	C12AA04WS	N6	L6	80	257	C12AA04WS	N3	L3
25.0	10	84	5/8	40	1,167	C58AA06WS	N12	L12	80	583	C58AA04WS	N6	L6
				OUTBOARD TRANS., LONGITUDINAL BRACING REQUIREMENTS [9]									
				8-Way Transverse, Longitudinal Brace Pattern (B26.1)									
35.0	10	118	5/8	40	1,634	C58DG06TS	N17	L17					
50.0	10	169	5/8	30	1,750	C58DG06TS	N18	L18					
65.0	10	219	5/8	23	1,744	C58DG06TS	N18	L18					
75.0	10	253	5/8	20	1,750	C58DG06TS	N18	L18					
100.0	10	338	5/8	15	1,750	C58DG06TS	N18	L18					
125.0	10	422	5/8	12	1,750	C58DG06TS	N18	L18					
150.0	10	506	5/8	10	1,750	C58DG06TS	N18	L18					

1. TVL = DL + Fv + ($0.2S_{DS}$/1.4 x Wp). All Terms Are Working Loads. Based On Eccentric Loading, 25% Of Total Load Allocated Per Outboard Rod.
2. Reductions In Actual Installed Brace Spacing Will Result In An Equal Percentage Reduction In Brace Reaction. As An Option When This Occurs ISAT May Substitute An Alternate Anchorage From Tables D1 or D2 Which Meets or Exceeds The Lowered Brace Reaction.
3. At Max. 50 Degree Brace Inclination.
4. Min. 3,000 psi NWC. Any "N Series" Connection May Be Utilized Having A Numeric Designation Equal To Or Higher Than That Shown.
5. Min. 3,000 psi NWC or LWC. Any "L Series" Connection May Be Utilized Having A Numeric Designation Equal To Or Higher Than That Shown.
6. As An Alternate, Brace Anchorage Connections To Structure May Be Employed Using Any Detail From Structural Connections Section "D" Series Details Where Assembly Design Value Meets Or Exceeds Brace Reaction.
7. For Trade Specific Bracing Installation Notes, Refer To Page 7.1.
8. Utilize Any "G" Series Vertical Support Connection Having A Design Value Equal To Or Greater Than The Corresponding "Rod Total Vertical Load".

REVIEWED FOR CODE COMPLIANCE
OPM-0403
BY: William Staehlin
DATE: 01-26-2024
CALIFORNIA BUILDING CODE, 2019

REGISTERED PROFESSIONAL ENGINEER
MARCIN WASAZNIK
S-6612
STRUCTURAL
STATE OF CALIFORNIA

ISAT
A Division of Tomarco Contractor Specialties

International Seismic Application Technology
14848 Northam Street, La Mirada, CA 90638
877-999-4728 (Toll Free) 714-523-0845 (Fax)
www.isatsb.com

Rev. 0
8/03/18

Page
C38-0.75-45
Outboard

CABLE BRACING REQUIREMENTS [7]

3-ROD TRAPEZED ELECTRICAL SYSTEMS (Conduit, Cable Tray, Bus Duct, Bus Way) — **MAXIMUM SEISMIC DESIGN FORCE = 0.75 G's**

Requires Use of ISAT Seismic Brackets. Use of Any Non-ISAT Bracket Voids Engineering. — *2013 California Building Code Compliant*

Maximum Trapeze Load (lbs/lf)	Max. Vertical Support Spacing (ft.)	Outboard [1, 8] Rod Total Vertical Load (lbs)	Min. [8] Vertical Support Rod Dia. (in.)	OUTBOARD TRANSVERSE BRACING REQUIREMENTS					OUTBOARD LONGITUDINAL BRACING REQUIREMENTS [9]				
				Max. [2] Brace Spacing (ft.)	Brace [3] Reaction P (lbs)	Min. Brace Assembly E - Pages	Min. Brace Anchorage [6] Form Pour [4] Deck Page D1	Min. Brace Anchorage [6] Metal [5] Deck Page D2	Max. [2] Brace Spacing (ft.)	Brace [3] Reaction P (lbs)	Min. Brace Assembly E - Pages	Min. Brace Anchorage [6] Form Pour [4] Deck Page D1	Min. Brace Anchorage [6] Metal [5] Deck Page D2
				2-Way Transverse Brace Pattern (B26.0)					8-Way Transverse, Longitudinal Brace Pattern (B26.1)				
11.0	10	37	1/2	40	660	C12AA04WS	N7	L7	80	330	C12AA04WS	N4	L4
25.0	10	84	3/4	40	1,500	C34DG06TS	N15	L15	80	750	C34DG06WS	N8	L8
				OUTBOARD TRANS., LONGITUDINAL BRACING REQUIREMENTS [9]									
				8-Way Transverse, Longitudinal Brace Pattern (B26.1)									
35.0	10	118	5/8	28	1,470	C58AA06WS	N15	L15					
50.0	10	169	5/8	19	1,425	C58AA06WS	N15	L15					
65.0	10	219	5/8	15	1,463	C58AA06WS	N15	L15					
75.0	10	253	5/8	13	1,463	C58AA06WS	N15	L15					

1. TVL = DL + Fv + ($0.2S_{DS}$/1.4 x Wp). All Terms Are Working Loads. Based On Eccentric Loading, 25% Of Total Load Allocated Per Outboard Rod.
2. Reductions In Actual Installed Brace Spacing Will Result In An Equal Percentage Reduction In Brace Reaction. As An Option When This Occurs ISAT May Substitute An Alternate Anchorage From Tables D1 or D2 Which Meets or Exceeds The Lowered Brace Reaction.
3. At Max. 60 Degree Brace Inclination.
4. Min. 3,000 psi NWC. Any "N Series" Connection May Be Utilized Having A Numeric Designation Equal To Or Higher Than That Shown.
5. Min. 3,000 psi NWC or LWC. Any "L Series" Connection May Be Utilized Having A Numeric Designation Equal To Or Higher Than That Shown.
6. As An Alternate, Brace Anchorage Connections To Structure May Be Employed Using Any Detail From Structural Connections Section "D" Series Details Where Assembly Design Value Meets Or Exceeds Brace Reaction.
7. For Trade Specific Bracing Installation Notes, Refer To Page 7.1.
8. Utilize Any "G" Series Vertical Support Connection Having A Design Value Equal To Or Greater Than The Corresponding "Rod Total Vertical Load".
9. Refer To C48.7B For Inboard Rod Bracing Requirements.

REVIEWED FOR CODE COMPLIANCE
OPM-0403
BY: William Staehlin
DATE: 01-26-2024
CALIFORNIA BUILDING CODE, 2022

REGISTERED PROFESSIONAL ENGINEER MARCIN WASAZNIK S-6612 STRUCTURAL STATE OF CALIFORNIA

ISAT
A Division of Tomarco Contractor Specialties
International Seismic Application Technology
14848 Northam Street, La Mirada, CA 90638
877-999-4728 (Toll Free) 714-523-0845 (Fax)
www.isatsb.com

Rev. 1
03/12/19
Page
C38-0.75-60
Outboard

CABLE BRACING REQUIREMENTS [7]

3-ROD TRAPEZED ELECTRICAL SYSTEMS (Conduit, Cable Tray, Bus Duct, Bus Way) — **MAXIMUM SEISMIC DESIGN FORCE = 1.00 G's**

Requires Use of ISAT Seismic Brackets. Use of Any Non-ISAT Bracket Voids Engineering. — *2013 California Building Code Compliant*

Maximum Trapeze Load (lbs/lf)	Max. Vertical Support Spacing (ft.)	Outboard [1, 8] Rod Total Vertical Load (lbs)	Min. [8] Vertical Support Rod Dia. (in.)	OUTBOARD TRANSVERSE BRACING REQUIREMENTS					OUTBOARD LONGITUDINAL BRACING REQUIREMENTS				
				Max. [2] Brace Spacing (ft.)	Brace [3] Reaction P (lbs)	Min. Brace Assembly E - Pages	Min. Brace Anchorage [6] Form Pour [4] Deck Page D1	Min. Brace Anchorage [6] Metal [5] Deck Page D2	Max. [2] Brace Spacing (ft.)	Brace [3] Reaction P (lbs)	Min. Brace Assembly E - Pages	Min. Brace Anchorage [6] Form Pour [4] Deck Page D1	Min. Brace Anchorage [6] Metal [5] Deck Page D2
				2-Way Transverse Brace Pattern (B26.0)					8-Way Transverse, Longitudinal Brace Pattern (B26.1)				
11.0	10	37	3/8	40	508	C38AA04WS	N6	L6	80	254	C38AA04WS	N3	L3
25.0	10	84	1/2	40	1,155	C12AA06WS	N12	L12	80	577	C12AA04WS	N6	L6
				OUTBOARD TRANS., LONGITUDINAL BRACING REQUIREMENTS [9]									
				8-Way Transverse, Longitudinal Brace Pattern (B26.1)									
35.0	10	118	1/2	35	1,415	C12AA06WS	N15	L15					
50.0	10	169	1/2	25	1,443	C12AA06WS	N15	L15					
65.0	10	219	1/2	19	1,426	C12AA06WS	N15	L15					
75.0	10	253	1/2	16	1,386	C12AA06WS	N14	L14					
100.0	10	338	1/2	12	1,386	C12AA06WS	N14	L14					
125.0	10	422	1/2	10	1,443	C12AA06WS	N15	L15					

1. TVL = DL + Fv + ($0.2S_{DS}$/1.4 x Wp). All Terms Are Working Loads. Based On Eccentric Loading, 25% Of Total Load Allocated Per Outboard Rod.
2. Reductions In Actual Installed Brace Spacing Will Result In An Equal Percentage Reduction In Brace Reaction. As An Option When This Occurs ISAT May Substitute An Alternate Anchorage From Tables D1 or D2 Which Meets or Exceeds The Lowered Brace Reaction.
3. At Max. 30 Degree Brace Inclination.
4. Min. 3,000 psi NWC. Any "N Series" Connection May Be Utilized Having A Numeric Designation Equal To Or Higher Than That Shown.
5. Min. 3,000 psi NWC or LWC. Any "L Series" Connection May Be Utilized Having A Numeric Designation Equal To Or Higher Than That Shown.
6. As An Alternate, Brace Anchorage Connections To Structure May Be Employed Using Any Detail From Structural Connections Section "D" Series Details Where Assembly Design Value Meets Or Exceeds Brace Reaction.
7. For Trade Specific Bracing Installation Notes, Refer To Page 7.1.
8. Utilize Any "G" Series Vertical Support Connection Having A Design Value Equal To Or Greater Than The Corresponding "Rod Total Vertical Load".

REVIEWED FOR CODE COMPLIANCE
OPM-0403
BY: William Staehlin
DATE: 01-26-2024
CALIFORNIA BUILDING CODE, 2022

REGISTERED PROFESSIONAL ENGINEER
MARCIN WASAZNIK
S-6612
STRUCTURAL
STATE OF CALIFORNIA

ISAT
A Division of Tomarco Contractor Specialties
International Seismic Application Technology
14848 Northam Street, La Mirada, CA 90638
877-999-4728 (Toll Free) 714-523-0845 (Fax)
www.isatsb.com

Rev. 0
8/03/18
Page
C38-1-30
Outboard

CABLE BRACING REQUIREMENTS [7]

3-ROD TRAPEZED ELECTRICAL SYSTEMS (Conduit, Cable Tray, Bus Duct, Bus Way) — **MAXIMUM SEISMIC DESIGN FORCE = 1.00 G's**

Requires Use of ISAT Seismic Brackets. Use of Any Non-ISAT Bracket Voids Engineering. — *2013 California Building Code Compliant*

Maximum Trapeze Load (lbs/lf)	Max. Vertical Support Spacing (ft.)	Outboard [1, 8] Rod Total Vertical Load (lbs)	Min. [8] Vertical Support Rod Dia. (in.)	OUTBOARD TRANSVERSE BRACING REQUIREMENTS					OUTBOARD LONGITUDINAL BRACING REQUIREMENTS				
				Max. [2] Brace Spacing (ft.)	Brace [3] Reaction P (lbs)	Min. Brace Assembly E - Pages	Min. Brace Anchorage [6] Form Pour [4] Deck Page D1	Min. Brace Anchorage [6] Metal [5] Deck Page D2	Max. [2] Brace Spacing (ft.)	Brace [3] Reaction P (lbs)	Min. Brace Assembly E - Pages	Min. Brace Anchorage [6] Form Pour [4] Deck Page D1	Min. Brace Anchorage [6] Metal [5] Deck Page D2
				2-Way Transverse Brace Pattern (B26.0)					8-Way Transverse, Longitudinal Brace Pattern (B26.1)				
11.0	10	37	1/2	40	685	C12AA06WS	N7	L7	80	342	C12AA04WS	N4	L4
25.0	10	84	5/8	40	1,556	C58DG06TS	N16	L16	80	778	C58AA06WS	N8	L8
				OUTBOARD TRANS., LONGITUDINAL BRACING REQUIREMENTS [9]									
				8-Way Transverse, Longitudinal Brace Pattern (B26.1)									
35.0	10	118	5/8	32	1,742	C58DG06TS	N18	L18					
50.0	10	169	5/8	22	1,711	C58DG06TS	N18	L18					
65.0	10	219	5/8	17	1,719	C58DG06TS	N18	L18					
75.0	10	253	5/8	15	1,750	C58DG06TS	N18	L18					
100.0	10	338	5/8	11	1,711	C58DG06TS	N18	L18					

1. TVL = DL + Fv + ($0.2S_{DS}$/1.4 x Wp). All Terms Are Working Loads. Based On Eccentric Loading, 25% Of Total Load Allocated Per Outboard Rod.
2. Reductions In Actual Installed Brace Spacing Will Result In An Equal Percentage Reduction In Brace Reaction. As An Option When This Occurs ISAT May Substitute An Alternate Anchorage From Tables D1 or D2 Which Meets or Exceeds The Lowered Brace Reaction.
3. At Max. 50 Degree Brace Inclination.
4. Min. 3,000 psi NWC. Any "N Series" Connection May Be Utilized Having A Numeric Designation Equal To Or Higher Than That Shown.
5. Min. 3,000 psi NWC or LWC. Any "L Series" Connection May Be Utilized Having A Numeric Designation Equal To Or Higher Than That Shown.
6. As An Alternate, Brace Anchorage Connections To Structure May Be Employed Using Any Detail From Structural Connections Section "D" Series Details Where Assembly Design Value Meets Or Exceeds Brace Reaction.
7. For Trade Specific Bracing Installation Notes, Refer To Page 7.1.
8. Utilize Any "G" Series Vertical Support Connection Having A Design Value Equal To Or Greater Than The Corresponding "Rod Total Vertical Load".

REVIEWED FOR CODE COMPLIANCE
ISAT
OPM-0403
BY: William Staehlin
DATE: 01-26-2024
CALIFORNIA BUILDING CODE, 2022

REGISTERED PROFESSIONAL ENGINEER
MARCIN WASAZNIK
S-6612
STRUCTURAL
STATE OF CALIFORNIA

ISAT
A Division of Tomarco Contractor Specialties
International Seismic Application Technology
14848 Northam Street, La Mirada, CA 90638
877-999-4728 (Toll Free) 714-523-0845 (Fax)
www.isatsb.com

Rev. 0
8/03/18
Page
C38-1-45
Outboard

CABLE BRACING REQUIREMENTS [7]

3-ROD TRAPEZED ELECTRICAL SYSTEMS (Conduit, Cable Tray, Bus Duct, Bus Way) — **MAXIMUM SEISMIC DESIGN FORCE = 1.00 G's**

Requires Use of ISAT Seismic Brackets. Use of Any Non-ISAT Bracket Voids Engineering. — *2013 California Building Code Compliant*

Maximum Trapeze Load (lbs/lf)	Max. Vertical Support Spacing (ft.)	Outboard [1, 8] Rod Total Vertical Load (lbs)	Min. [8] Vertical Support Rod Dia. (in.)	OUTBOARD TRANSVERSE BRACING REQUIREMENTS					OUTBOARD LONGITUDINAL BRACING REQUIREMENTS [9]				
				Max. [2] Brace Spacing (ft.)	Brace [3] Reaction P (lbs)	Min. Brace Assembly E - Pages	Min. Brace Anchorage [6] Form Pour [4] Deck Page D1	Min. Brace Anchorage [6] Metal [5] Deck Page D2	Max. [2] Brace Spacing (ft.)	Brace [3] Reaction P (lbs)	Min. Brace Assembly E - Pages	Min. Brace Anchorage [6] Form Pour [4] Deck Page D1	Min. Brace Anchorage [6] Metal [5] Deck Page D2
				2-Way Transverse Brace Pattern (B26.0)					8-Way Transverse, Longitudinal Brace Pattern (B26.1)				
11.0	10	37	1/2	40	880	C12AA06WS	N9	L9	80	440	C12AA04WS	N5	L5
				OUTBOARD TRANS., LONGITUDINAL BRACING REQUIREMENTS [9]									
				8-Way Transverse, Longitudinal Brace Pattern (B26.1)									
25.0	10	84	5/8	29	1,450	C58AA06WS	N15	L15					
35.0	10	118	5/8	21	1,470	C58AA06WS	N15	L15					
50.0	10	169	5/8	14	1,400	C58AA06WS	N14	L14					
65.0	10	219	5/8	11	1,430	C58AA06WS	N15	L15					

1. TVL = DL + Fv + ($0.2S_{DS}$/1.4 x Wp). All Terms Are Working Loads. Based On Eccentric Loading, 25% Of Total Load Allocated Per Outboard Rod.
2. Reductions In Actual Installed Brace Spacing Will Result In An Equal Percentage Reduction In Brace Reaction. As An Option When This Occurs ISAT May Substitute An Alternate Anchorage From Tables D1 or D2 Which Meets or Exceeds The Lowered Brace Reaction.
3. At Max. 60 Degree Brace Inclination.
4. Min. 3,000 psi NWC. Any "N Series" Connection May Be Utilized Having A Numeric Designation Equal To Or Higher Than That Shown.
5. Min. 3,000 psi NWC or LWC. Any "L Series" Connection May Be Utilized Having A Numeric Designation Equal To Or Higher Than That Shown.
6. As An Alternate, Brace Anchorage Connections To Structure May Be Employed Using Any Detail From Structural Connections Section "D" Series Details Where Assembly Design Value Meets Or Exceeds Brace Reaction.
7. For Trade Specific Bracing Installation Notes, Refer To Page 7.1.
8. Utilize Any "G" Series Vertical Support Connection Having A Design Value Equal To Or Greater Than The Corresponding "Rod Total Vertical Load".
9. Refer To C48.7B For Inboard Rod Bracing Requirements.

REVIEWED FOR CODE COMPLIANCE
OPM-0403
BY: William Staehlin
DATE: 01-26-2024
CALIFORNIA BUILDING CODE, 2022

REGISTERED PROFESSIONAL ENGINEER
MARCIN WASAZNIK
S 6612
STRUCTURAL
STATE OF CALIFORNIA

ISAT
A Division of Tomarco Contractor Specialties

International Seismic Application Technology
14848 Northam Street, La Mirada, CA 90638
877-999-4728 (Toll Free) 714-523-0845 (Fax)
www.isatsb.com

Rev. 0
8/03/18

Page
C38-1-60
Outboard

STEEL PIPE SCHEDULE STD (WATER FILLED WITH INSULATION)										
TRADE SIZE (in)	MAX GRAVITY SUPPORT SPACING (ft)	MAX WEIGHT (lbs/ft)	MAXIMUM ALLOWABLE TRANSVERSE BRACE SPACING (ft)							
			G FORCE (ASD)							
			0.25	0.50	0.75	1.00	1.25	1.50	1.75	2.00
1.25	10	3.58	36	30	25	21	19	17	16	15
1.5	10	4.24	39	33	27	23	21	19	18	17
2	10	5.89	43	37	30	26	24	22	20	19
2.5	11	8.84	48	41	35	30	27	24	23	21
3	12	11.86	53	45	38	33	29	27	25	23
4	14	19.49	58	48	39	34	30	27	25	24
5	16	26.89	65	52	42	37	33	30	28	26
6	17	35.72	71	56	45	39	35	32	30	28
8	19	55.24	80	62	51	44	39	36	33	31
10	22	80.95	89	67	54	47	42	38	36	33
12	23	105.5	96	69	56	49	44	40	37	35
14	25	121.9	96	68	56	48	43	39	36	34
16	27	150.2	95	67	55	47	42	39	36	33
18	28	181.2	93	66	54	47	42	38	35	33
20	30	214.6	89	63	52	45	40	36	34	32
24	32	290.4	82	58	47	41	36	33	31	29
26	32	332.4	79	56	45	39	35	32	30	28

REVIEWED FOR CODE COMPLIANCE
HCAi
OPM-0403
BY: William Staehlin
DATE: 01-26-2024

NOTES:

1. MAXIMUM BRACE SPACING IS BASED ON ASME B31E DESIGN BY ANALYSIS EQUATION. PIPE SIZE, MATERIALS, PRESSURES ETC. NOT USED TO DETERMINE THESE TABLES MAY USE ASME B31E DESIGN BY ANALYSIS TO DETERMINE THE MAXIUMUM SEISMIC BRACE SPACINGS ON A PROJECT BY PROJECT BASIS.
2. MAXIMUM GRAVITY SUPPORT SPACING IS BASED ON TABLE 316.2 OF THE 2013 CALIFORNIA MECHANICAL CODE (CMC 2013) & MSS SP-58 TABLE 4. PIPE WEIGHTS USED ARE BASED ON STANDARD SCHEDULE STEEL PIPES (40S) INCLUDING WATER AND INSULATION (REFER TO X-SERIES PAGES). PIPES WITH THICKER WALLS AND/OR FILLED WITH VAPOR OR GAS MAY USE SPACINGS AS TABULATED.
3. FOR LONGITUDINAL AND ALL-DIRECTIONAL BRACE SPACING, TRIPLE THE VALUES IN THE ABOVE TABLE. BRACE AND/OR CONNECTION CAPACITY MAY GOVERN MAXIMUM SPACING IN SOME CASES.
4. BRACE SPACINGS ARE BASED ON STEEL PIPE CONFORMING TO ASTM SPECIFICATION A53, TYPE E, GRADE B WITH MINIMUM Fy = 35 ksi AND S_A = 14.6 ksi AT MAXIMUM OPERATING PRESSURE AND TEMPERATURE OF 400psi AND 650°F, RESPECTIVELY. FOR ASTM A53, TYPE E, GRADE A WITH MINIMUM Fy = 30 ksi AND S_A = 11.7 ksi, REDUCE SPACINGS BY A FACTOR OF 1.20 UP TO 14" Ø PIPE, 1.33 UP TO 30" Ø PIPE. STEEL PIPES, INCLUDING STAINLESS, WITH Fy AND S_A VALUES MEETING OR EXCEEDING ABOVE STATES MINIMUMS PER ASME B31 APPENDIX A MAY USE TABULATED SPACINGS WITH APPROPRIATE REDUCTION FACTORS, WHERE APPLICABLE.
5. PIPE FITTINGS AS IDENTIFIED IN ASME B31 APPENDIX D MAY INCLUDE THE FOLLOWING: LONG OR SHORT RADIUS ELBOWS, WELDING TEES, BRANCH WELD-ON FITTINGS, WELDED-IN CONTOUR FITTINGS AND CONCENTRIC REDUCERS. FOR FABRICATED TEES REDUCE SPACING BY A FACTOR OF 1.33 UP TO 12" Ø PIPE. (FABRICATED TEES ARE ACCEPTABLE FOR 14" Ø TO 30" Ø PIPE).
6. ACCEPTABLE PIPE CONNECTIONS INCLUDE BUTT WELDS, FILLET WELDS, THREADED JOINTS OR FLANGES AND RIGID GROOVED COUPLINGS. RIGID GROOVED COUPLINGS LISTED FOR UL STANDARD 213 MAY USE LISTED MAXIMUM BRACE SPACINGS.

REGISTERED PROFESSIONAL ENGINEER
MARCIN WASAZNIK
S 6612
STRUCTURAL
STATE OF CALIFORNIA

ISAT
A Division of Tomarco Contractor Specialties

International Seismic Application Technology
14848 Northam Street, La Mirada, CA 90638
877-999-4728 (Toll Free) 714-523-0845 (fax)
www.isatsb.com

STEEL PIPE SCHEDULE 80 (WATER FILLED WITH INSULATION)										
TRADE SIZE (in)	MAX GRAVITY SUPPORT SPACING (ft)	MAX WEIGHT (lbs/ft)	MAXIMUM ALLOWABLE TRANSVERSE BRACE SPACING (ft)							
			G FORCE (ASD)							
			0.25	0.50	0.75	1.00	1.25	1.50	1.75	2.00
1.25	10	4.31	36	31	25	22	20	18	17	16
1.5	10	5.06	39	33	28	25	22	20	19	17
2	10	7.14	44	37	32	28	25	23	21	20
2.5	11	10.46	49	41	36	32	28	26	24	22
3	12	14.17	54	46	40	35	31	28	26	25
4	14	23.14	60	51	43	37	33	30	28	26
5	16	32.26	67	56	47	41	37	33	31	29
6	17	44.07	73	62	52	45	40	37	34	32
8	19	68.33	84	70	59	51	46	42	38	36
10	22	101.88	90	72	58	51	45	41	38	36

REVIEWED FOR CODE COMPLIANCE
HCAi
OPM-0403
BY: William Staehlin
DATE: 01/26/2024
IFC 2021 / IBC 2021 / CMC 2021 / UPC 2021

NOTES:

1. MAXIMUM BRACE SPACING IS BASED ON ASME B31E DESIGN BY ANALYSIS EQUATION. PIPE SIZE, MATERIALS, PRESSURES ETC. NOT USED TO DETERMINE THESE TABLES MAY USE ASME B31E DESIGN BY ANALYSIS TO DETERMINE THE MAXIUMUM SEISMIC BRACE SPACINGS ON A PROJECT BY PROJECT BASIS.
2. MAXIMUM GRAVITY SUPPORT SPACING IS BASED ON TABLE 316.2 OF THE 2013 CALIFORNIA MECHANICAL CODE (CMC 2013) & MSS SP-58 TABLE 4. PIPE WEIGHTS USED ARE BASED ON STANDARD SCHEDULE STEEL PIPES (40S) INCLUDING WATER AND INSULATION (REFER TO X-SERIES PAGES). PIPES WITH THICKER WALLS AND/OR FILLED WITH VAPOR OR GAS MAY USE SPACINGS AS TABULATED.
3. FOR LONGITUDINAL AND ALL-DIRECTIONAL BRACE SPACING, TRIPLE THE VALUES IN THE ABOVE TABLE. BRACE AND/OR CONNECTION CAPACITY MAY GOVERN MAXIMUM SPACING IN SOME CASES.
4. BRACE SPACINGS ARE BASED ON STEEL PIPE CONFORMING TO ASTM SPECIFICATION A53, TYPE E, GRADE B WITH MINIMUM Fy = 35 ksi AND S_A = 14.6 ksi AT MAXIMUM OPERATING PRESSURE AND TEMPERATURE OF 400psi AND 650°F, RESPECTIVELY. FOR ASTM A53, TYPE E, GRADE A WITH MINIMUM Fy = 30 ksi AND S_A = 11.7 ksi, REDUCE SPACINGS BY A FACTOR OF 1.20 UP TO 14" Ø PIPE, 1.33 UP TO 30" Ø PIPE. STEEL PIPES, INCLUDING STAINLESS, WITH Fy AND S_A VALUES MEETING OR EXCEEDING ABOVE STATES MINIMUMS PER ASME B31 APPENDIX A MAY USE TABULATED SPACINGS WITH APPROPRIATE REDUCTION FACTORS, WHERE APPLICABLE.
5. PIPE FITTINGS AS IDENTIFIED IN ASME B31 APPENDIX D MAY INCLUDE THE FOLLOWING: LONG OR SHORT RADIUS ELBOWS, WELDING TEES, BRANCH WELD-ON FITTINGS, WELDED-IN CONTOUR FITTINGS AND CONCENTRIC REDUCERS. FOR FABRICATED TEES REDUCE SPACING BY A FACTOR OF 1.33 UP TO 12" Ø PIPE. (FABRICATED TEES ARE ACCEPTABLE FOR 14" Ø TO 30" Ø PIPE).
6. ACCEPTABLE PIPE CONNECTIONS INCLUDE BUTT WELDS, FILLET WELDS, THREADED JOINTS OR FLANGES AND RIGID GROOVED COUPLINGS. RIGID GROOVED COUPLINGS LISTED FOR UL STANDARD 213 MAY USE LISTED MAXIMUM BRACE SPACINGS.

ELECTRICAL METAL TUBING (EMT)										
TRADE SIZE (in)	MAX GRAVITY SUPPORT SPACING (ft)	MAX WEIGHT (lbs/ft)	MAXIMUM ALLOWABLE TRANSVERSE BRACE SPACING (ft)							
			G FORCE (ASD)							
			0.25	0.50	0.75	1.00	1.25	1.50	1.75	2.00
1.5	10	3.36	33	27	23	21	20	19	18	17
2	10	4.78	36	30	26	24	22	21	20	19
2.5	10	6.28	42	36	32	30	28	26	25	24
3	10	9.60	44	37	34	31	29	28	26	25
3.5	10	11.94	48	40	36	34	32	31	29	28
4	10	13.07	51	43	39	36	34	33	31	30

NOTES:

1. MAXIMUM BRACE SPACING IS BASED ON ASCE 7-10 SECTION 13.6.11, NOTE b, 70 PERCENT OF THE MATERIAL MINIMUM SPECIFIED TENSILE STRENGTH FOR STEEL TUBING WITH THREADED CONNECTIONS.
2. EMT USES CONDUCTOR CONTENT WHEN DETERMINING WEIGHT (REFER TO X-SERIES PAGES).
3. FOR LONGITUDINAL AND ALL-DIRECTIONAL BRACE SPACING, MULTIPLY THE TABULATED VALUE BY 3. BRACE AND/OR CONNECTION CAPACITY MAY GOVERN MAXIMUM SPACING IN SOME CASES.
4. BRACE SPACNGS ARE BASED ON EMT STEEL TUBING CONSTRUCTED TO UL-797 OR ANSI C-80.1 WITH A MINIMUM YIELD STRENGTH OF 45,000 PSI.

REVIEWED FOR CODE COMPLIANCE
HCAi
OPM-0403
BY: William Staehlin
DATE: 01/26/2024
CALIFORNIA BUILDING CODE 2022

REGISTERED PROFESSIONAL ENGINEER
MARCIN WASAZNIK
S 6612
STRUCTURAL
STATE OF CALIFORNIA

ISAT
A Division of Tomarco Contractor Specialties

International Seismic Application Technology
14848 Northam Street, La Mirada, CA 90638
877-999-4728 (Toll Free) 714-523-0845 (fax)
www.isatsb.com

INTERMEDIATE METAL CONDUIT (IMC)										
TRADE SIZE (in)	MAX GRAVITY SUPPORT SPACING (ft)	MAX WEIGHT (lbs/ft)	MAXIMUM ALLOWABLE TRANSVERSE BRACE SPACING (ft)							
			G FORCE (ASD)							
			0.25	0.50	0.75	1.00	1.25	1.50	1.75	2.00
1.5	10	4.02	36	30	26	24	22	21	20	19
2	10	5.72	39	33	30	27	25	24	23	22
2.5	10	8.40	45	38	35	32	30	29	27	26
3	10	12.23	47	40	36	33	32	30	29	28
3.5	10	14.57	50	42	38	36	34	32	31	30
4	10	15.96	54	45	41	38	36	34	33	32

NOTES:

1. MAXIMUM BRACE SPACING IS BASED ON ASCE 7-10 SECTION 13.6.11, NOTE b, 70 PERCENT OF THE MATERIAL MINIMUM SPECIFIED TENSILE STRENGTH FOR STEEL TUBING WITH THREADED CONNECTIONS.
2. IMC USES CONDUCTOR CONTENT WHEN DETERMINING WEIGHT (REFER TO X-SERIES PAGES).
3. FOR LONGITUDINAL AND ALL-DIRECTIONAL BRACE SPACING, MULTIPLY THE TABULATED VALUES BY 3. BRACE AND/OR CONNECTION CAPACITY MAY GOVERN MAXIMUM SPACING IN SOME CASES.
4. BRACE SPACINGS ARE BASED ON IMC STEEL TUBING CONSTRUCTED TO UL-1242 OR ANSI C80.6 WITH A MINIMUM YIELD STRENGTH OF 55,000 PSI.

REVIEWED FOR CODE COMPLIANCE
OPM-0403
BY: William Staehlin
DATE: 01-26-2024
CALIFORNIA BUILDING CODE 2022

RIGID METAL CONDUIT (RMC)										
TRADE SIZE (in)	MAX GRAVITY SUPPORT SPACING (ft)	MAX WEIGHT (lbs/ft)	MAXIMUM ALLOWABLE TRANSVERSE BRACE SPACING (ft)							
			G FORCE (ASD)							
			0.25	0.50	0.75	1.00	1.25	1.50	1.75	2.00
1.5	10	4.83	37	32	28	25	24	22	21	20
2	10	6.8	42	35	32	29	27	26	24	23
2.5	10	9.71	47	39	36	33	31	30	28	27
3	10	14.24	50	42	38	36	34	32	31	30
3.5	10	17.25	54	45	41	38	36	35	33	32
4	10	19.438	58	49	44	41	39	37	36	35
5	10	30.95	63	53	48	44	42	40	38	36
6	10	57.7	62	52	47	44	41	38	35	33

NOTES:

1. MAXIMUM BRACE SPACING IS BASED ON ASCE 7-10 SECTION 13.6.11, NOTE b, 70 PERCENT OF THE MATERIAL MINIMUM SPECIFIED TENSILE STRENGTH FOR STEEL TUBING WITH THREADED CONNECTIONS.
2. RMC USES CONDUCTOR CONTENT WHEN DETERMINING WEIGHT (REFER TO X-SERIES PAGES).
3. FOR LONGITUDINAL AND ALL-DIRECTIONAL BRACING SPACING, MULTIPLY THE TABULATED VALUES BY 3. BRACE AND/OR CONNECTION CAPACITY MAY GOVERN MAXIMUM SPACING IN SOME CASES.
4. BRACE SPACINGS ARE BASED ON RMC STEEL TUBING CONSTRUCTED TO UL-6 OR ANSI C-80.1 WITH A MINIMUM YIELD STRENGTH OF 35,000 PSI.

TYPE L - COPPER TUBING (WATER-FILLED & INSULATION)										
TRADE SIZE (in)	MAX GRAVITY SUPPORT SPACING (ft)	MAX WEIGHT (lbs/ft)	MAXIMUM ALLOWABLE TRANSVERSE BRACE SPACING (ft)							
			G FORCE (ASD)							
			0.25	0.50	0.75	1.00	1.25	1.50	1.75	2.00
1.5	8	2.57	25	18	15	13	11	10	10	9
2	10	3.93	28	20	16	14	12	11	10	10
2.5	10	5.5	32	23	19	16	15	13	12	11
3	10	7.34	37	26	21	18	16	15	14	13
4	10	13.75	40	28	23	20	18	16	15	14
6	10	26.03	50	35	29	25	22	20	19	18
8	10	44.72	62	44	36	31	28	25	23	22
10	10	68.04	71	50	41	35	32	29	27	25

TYPE L - COPPER TUBING (GAS PIPING)										
TRADE SIZE (in)	MAX GRAVITY SUPPORT SPACING (ft)	MAX WEIGHT (lbs/ft)	MAXIMUM ALLOWABLE TRANSVERSE BRACE SPACING (ft)							
			G FORCE (ASD)							
			0.25	0.50	0.75	1.00	1.25	1.50	1.75	2.00
1.5	10	1.14	35	28	23	20	18	16	15	14
2	10	1.75	40	33	27	23	21	19	18	17
2.5	10	2.48	44	37	31	26	24	22	20	19
3	10	3.33	48	41	34	29	26	24	22	21
4	10	5.38	55	47	39	34	30	28	26	24
6	10	10.2	68	57	48	42	37	34	32	30
8	10	19.29	78	65	56	49	43	40	37	34
10	10	30.1	87	73	63	54	49	44	41	38

REVIEWED FOR CODE COMPLIANCE
OPM-0403
BY: William Staehlin
DATE: 01-26-2024
CALIFORNIA BUILDING CODE 2022

NOTES:

1. MAXIMUM BRACE SPACING IS BASED ON ASME B31E DESIGN BY ANALYSIS EQUATION. PIPE SIZE, MATERIALS, PRESSURES ETC. NOT USED TO DETERMINE THESE TABLES MAY USE ASME B31E DESIGN BY ANALYSIS TO DETERMINE THE MAXIMUM SEISMIC BRACE SPACINGS ON A PROJECT BY PROJECT BASIS.
2. MAXIMUM GRAVITY SUPPORT SPACING IS BASED ON MSS SP-58 TABLE 4.
3. FOR LONGITUDINAL AND ALL-DIRECTIONAL BRACE SPACING, TRIPLE THE VALUES IN THE ABOVE TABLE. BRACE AND/OR CONNECTION CAPACITY MAY GOVERN MAXIMUM SPACING IN SOME CASES.
4. BRACE SPACINGS ARE BASED ON PIPE CONFORMING TO ASTM SPECIFICATION B88 TYPE L DRAWN OR ANNEALED COPPER PIPE WITH SOLDERED JOINTS AND MAXIMUM OPERATING PRESSURE AND TEMPERATURE OF 100 PSI AND 250° F, RESPECTIVELY. TYPE L DRAWN COPPER PIPE WITH BRAZED JOINTS MAY USE THESE CHARTS IF THEY OCCUR WITHIN 12" OF A GRAVITY SUPPORT.

REGISTERED PROFESSIONAL ENGINEER
MARCIN WASAZNIK
S 6612
STRUCTURAL
STATE OF CALIFORNIA

ISAT
A Division of Tomarco Contractor Specialties

International Seismic Application Technology
14848 Northam Street, La Mirada, CA 90638
877-999-4728 (Toll Free) 714-523-0845 (fax)
www.isatsb.com

TYPE K - COPPER TUBING (WATER-FILLED & INSULATION)										
TRADE SIZE (in)	MAX GRAVITY SUPPORT SPACING (ft)	MAX WEIGHT (lbs/ft)	MAXIMUM ALLOWABLE TRANSVERSE BRACE SPACING (ft)							
			G FORCE (ASD)							
			0.25	0.50	0.75	1.00	1.25	1.50	1.75	2.00
1.5	8	2.76	27	19	16	13	12	11	10	10
2	10	4.21	30	21	17	15	13	12	11	11
2.5	10	5.88	34	24	20	17	15	14	13	12
3	10	8.03	39	27	22	19	17	16	15	14
4	10	14.75	43	30	25	21	19	17	16	15
6	10	29.28	56	40	32	28	25	23	21	20
8	10	50.54	66	48	39	34	31	28	26	24
10	10	77.07	74	55	45	39	35	32	29	27

NOTES:

1. MAXIMUM BRACE SPACING IS BASED ON ASME B31E DESIGN BY ANALYSIS EQUATION. PIPE SIZE, MATERIALS, PRESSURES ETC. NOT USED TO DETERMINE THESE TABLES MAY USE ASME B31E DESIGN BY ANALYSIS TO DETERMINE THE MAXIMUM SEISMIC BRACE SPACINGS ON A PROJECT BY PROJECT BASIS.
2. MAXIMUM GRAVITY SUPPORT SPACING IS BASED ON MSS SP-58 TABLE 4.
3. FOR LONGITUDINAL AND ALL-DIRECTIONAL BRACE SPACING, TRIPLE THE VALUES IN THE ABOVE TABLE. BRACE AND/OR CONNECTION CAPACITY MAY GOVERN MAXIMUM SPACING IN SOME CASES.
4. BRACE SPACINGS ARE BASED ON PIPE CONFORMING TO ASTM SPECIFICATION B88 TYPE K DRAWN OR ANNEALED COPPER PIPE WITH SOLDERED JOINTS AND MAXIMUM OPERATING PRESSURE AND TEMPERATURE OF 100 PSI AND 250° F, RESPECTIVELY. TYPE K DRAWN COPPER PIPE WITH BRAZED JOINTS MAY USE THESE CHARTS IF THEY OCCUR WITHIN 12" OF A GRAVITY SUPPORT.

REVIEWED FOR CODE COMPLIANCE
HCAi
OPM-0403
BY: William Staehlin
DATE: 01-26-2024
CALIFORNIA BUILDING CODE 2022

REGISTERED PROFESSIONAL ENGINEER
MARCIN WASAZNIK
S 6612
STRUCTURAL
STATE OF CALIFORNIA

ISAT
A Division of Tomarco Contractor Specialties

International Seismic Application Technology
14848 Northam Street, La Mirada, CA 90638
877-999-4728 (Toll Free) 714-523-0845 (fax)
www.isatsb.com

Rev. 0
11/13/18

Page
C65.1

NO HUB CAST IRON PIPING (ASTM A888 GRAY IRON - NO WATER)																		
TRADE SIZE (in)	MAX GRAVITY SUPPORT SPACING (ft)	MAX WEIGHT (lbs/ft)	MAXIMUM ALLOWABLE TRANSVERSE BRACE SPACING (ft)								MAXIMUM ALLOWABLE LONGITUDINAL BRACE SPACING (ft)							
			G FORCE (ASD)								G FORCE (ASD)							
			0.25	0.50	0.75	1.00	1.25	1.50	1.75	2.00	0.25	0.50	0.75	1.00	1.25	1.50	1.75	2.00
2	8	3.6	26	18	15	13	12	11	10	10	40	37	30	24	19	16	14	12
3	8	5.2	31	22	18	15	14	13	12	12	40	40	35	31	27	23	19	17
4	8	7.4	32	23	19	16	15	13	12	15	40	40	38	32	29	27	23	20
5	8	9.4	32	23	19	16	14	13	12	15	40	40	37	32	29	26	24	23
6	8	11	34	24	20	17	15	14	13	15	40	40	39	34	31	28	26	26
8	8	18	35	25	20	17	16	14	13	12	40	40	40	31	25	20	18	15
10	8	25.8	37	26	21	18	16	14	12	11	40	40	27	20	16	13	12	10
12	8	35.5	10	10	10	10	10	10	10	10	20	20	18	14	11	10	10	10

NOTES:
1. MAXIMUM BRACE SPACING IS BASED ON ASTM C1540, FM 1680 CLASS I, AND ASCE 7-10 SECTION 13.6.8, NOTE c, 10 PERCENT OF THE MATERIAL MINIMUM SPECIFIED TENSILE STRENGTH FOR CAST IRON.
2. MAXIMUM GRAVITY SPACING IS BASED ON SUPPORT OF STANDARD 10 FOOT MAXIMUM PIPE LENGTH SEGMENTS SUPPORTED WITHIN 12 INCHES IN EACH DIRECTION FROM JOINT CONNECTION. TRIBUTARY LENGTH FOR EACH SUPPORT SHALL NOT EXCEED 5 FEET OF PIPE. PIPE WEIGHTS CONSIDERED EMPTY (REFER TO X-SERIES PAGES).
3. BRACE SPACING SHALL BE 10 FEET MINIMUM AND 40 FEET MAXIMUM. BRACE AND/OR CONNECTION CAPACITY MAY GOVERN MAXIMUM SPACING IN SOME CASES.
4. BRACE SPACINGS ARE BASED ON CAST IRON PIPE CONSTRUCTED TO ASTM A 888 OR CISPI 301 STANDARDS WITH A MINIMUM TENSILE STRENGTH OF 21,000 PSI.
5. CAST IRON PIPE (NO-HUB PIPE) BRACE SPACINGS SHALL NOT EXCEED THE TABULATED SPACINGS. NO-HUB COUPLINGS SHALL BE MANUFACTURED IN ACCORDANCE WITH ASTM C1540, SHALL BE CERTIFIED IN ACCORDANCE WITH FM 1680 CLASS I, AND GRAVITY HANGERS SHALL BE SPACED PER REQUIREMENTS OF TABLE 313.1 OR THE 2013 CALIFORNIA PLUMBING CODE (CPC 2013) FOR NO-HUB CAST IRON PIPE.

NO HUB CAST IRON PIPING (ASTM A888 GRAY IRON - WATER FILLED)																		
TRADE SIZE (in)	MAX GRAVITY SUPPORT SPACING (ft)	MAX WEIGHT (lbs/ft)	MAXIMUM ALLOWABLE TRANSVERSE BRACE SPACING (ft)								MAXIMUM ALLOWABLE LONGITUDINAL BRACE SPACING (ft)							
			G FORCE (ASD)								G FORCE (ASD)							
			0.25	0.50	0.75	1.00	1.25	1.50	1.75	2.00	0.25	0.50	0.75	1.00	1.25	1.50	1.75	2.00
2	8	4.96	20	14	12	10	10	10	10	10	40	28	23	17	14	12	10	10
3	8	8.26	24	17	14	12	11	10	10	10	40	34	28	21	17	14	12	11
4	8	12.84	25	17	14	12	11	10	10	10	40	35	28	23	19	16	13	12
5	8	17.9	23	17	13	12	10	10	10	10	40	33	27	23	20	16	14	12
6	8	23.23	23	17	14	12	11	10	10	10	40	33	27	23	19	16	14	12
8	8	39.75	23	17	14	11	10	10	10	10	40	28	19	14	11	10	10	10
10	8	59.78	24	17	12	10	10	10	10	10	35	17	12	10	10	10	10	10
12	8	84.43	10	10	10	10	10	10	10	10	20	12	10	10	10	10	10	10

NOTES:
1. MAXIMUM BRACE SPACING IS BASED ON ASTM C1540, FM 1680 CLASS I, AND ASCE 7-10 SECTION 13.6.8, NOTE c, 10 PERCENT OF THE MATERIAL MINIMUM SPECIFIED TENSILE STRENGTH FOR CAST IRON.
2. MAXIMUM GRAVITY SPACING IS BASED ON SUPPORT OF STANDARD 10 FOOT MAXIMUM PIPE LENGTH SEGMENTS SUPPORTED WITHIN 12 INCHES IN EACH DIRECTION FROM JOINT CONNECTION. TRIBUTARY LENGTH FOR EACH SUPPORT SHALL NOT EXCEED 5 FEET OF PIPE FULL OF WATER. PIPE WEIGHTS CONSIDERED FULL OF WATER (REFER TO X-SERIES PAGES).
3. BRACE SPACING SHALL BE 10 FEET MINIMUM AND 40 FEET MAXIMUM. BRACE AND/OR CONNECTION CAPACITY MAY GOVERN MAXIMUM SPACING IN SOME CASES.
4. BRACE SPACINGS ARE BASED ON CAST IRON PIPE CONSTRUCTED TO ASTM A 888 OR CISPI 301 STANDARDS WITH A MINIMUM TENSILE STRENGTH OF 21,000 PSI.
5. CAST IRON PIPE (NO-HUB PIPE) BRACE SPACINGS SHALL NOT EXCEED THE TABULATED SPACINGS. NO-HUB COUPLINGS SHALL BE MANUFACTURED IN ACCORDANCE WITH ASTM C1540, SHALL BE CERTIFIED IN ACCORDANCE WITH FM 1680 CLASS I, AND GRAVITY HANGERS SHALL BE SPACED PER REQUIREMENTS OF TABLE 313.1 OR THE 2013 CALIFORNIA PLUMBING CODE (CPC 2013) FOR NO-HUB CAST IRON PIPE.

REVIEWED FOR CODE COMPLIANCE BY: William Staehlin DATE: 01-26-2024 OPM-0403 CALIFORNIA PLUMBING CODE - 2022

REGISTERED PROFESSIONAL ENGINEER MARCIN WASZCZYNIK S 6612 STATE OF CALIFORNIA STRUCTURAL

ISAT
A Division of Tomarco Contractor Specialties
International Seismic Application Technology
14848 Northam Street, La Mirada, CA 90638
877-999-4728 (Toll Free) 714-523-0845 (fax)
www.isatsb.com

INDEX - BRACE ARM ANCHORAGE DETAILS

PAGE	DESCRIPTION
	D1. CONNECTIONS TO CONCRETE FORM POUR
D1	SCHEDULE OF ANCHOR CONNECTIONS – NORMAL WEIGHT CONCRETE (NWC)
	A. POURED-IN-PLACE INSERTS (PIP)
	BLUE BANGER HANGER POURED-IN-PLACE (PIP) DECK INSERTS
D1.1B	SINGLE "PIP"; 3,000 THRU 6,000 PSI CONCRETE
D1.2B	DUAL "PIP", B1 STRUT; 3,000 THRU 6,000 PSI CONCRETE
	BABY BLUE BANGER HANGER POURED-IN-PLACE (PIP) DECK INSERTS
D1.1BB	SINGLE "PIP"; 3,000 THRU 6,000 PSI CONCRETE
D1.2BB	DUAL "PIP", B1 STRUT; 3,000 THRU 6,000 PSI CONCRETE
	PUSH ROD HANGER POURED-IN PLACE (PRPIP) DECK INSERTS
D1.1PR	SINGLE "PRPIP"; 3,000 THRU 6,000 PSI CONCRETE
D1.2PR	DUAL "PRPIP"; 3,000 THRU 6,000 PSI CONCRETE
	B. POST INSTALLED CONCRETE ANCHORS (NWC)
	HILTI KWIK BOLT TZ2 EXPANSION ANCHOR
	SINGLE ANCHOR CONNECTIONS
D1.1TZ23	3,000 PSI NWC
D1.1TZ24	4,000 PSI NWC
D1.1TZ25	5,000 PSI NWC
D1.1TZ26	6,000 PSI NWC
	DUAL ANCHOR CONNECTIONS
D1.2TZ23	3,000 PSI NWC
D1.2TZ24	4,000 PSI NWC
	FOUR BOLT ANCHOR CONNECTIONS
	- PLATE
D1.4TZ23	3,000 PSI NWC
D1.4TZ24	4,000 PSI NWC
D1.4.1TZ2	- H BRACKET
	HILTI KWIK HUS-EZ CONCRETE SCREW ANCHOR
	SINGLE ANCHOR CONNECTIONS
D1.1HUS3	3,000 PSI NWC
D1.1HUS4	4,000 PSI NWC
D1.1HUS5	5,000 PSI NWC
D1.1HUS6	6,000 PSI NWC
	DUAL ANCHOR, B1 STRUT CONNECTOR
D1.2HUS3	3,000 PSI NWC
D1.2HUS4	4,000 PSI NWC

REVIEWED FOR CODE COMPLIANCE
HCAI
OPM-0403
BY: William Staehlin
DATE: 01-26-2024
CALIFORNIA BUILDING CODE, 2022

REGISTERED PROFESSIONAL ENGINEER MARCIN WASAZNIK S 6612 STRUCTURAL STATE OF CALIFORNIA

ISAT
A Division of Tomarco Contractor Specialties

International Seismic Application Technology
14848 Northam Street, La Mirada, CA 90638
877-999-4728 (Toll Free) 714-523-0845 (fax)
www.isatsb.com

INDEX - BRACE ARM ANCHORAGE DETAILS (CONTINUED)

PAGE	DESCRIPTION
	CONNECTIONS TO CONCRETE FORM POUR (CONTINUED)
	POWERS POWER-STUD+ SD2 WEDGE EXPANSION ANCHOR
	SINGLE ANCHOR CONNECTIONS
D1.1SD23	3,000 PSI NWC
D1.1SD24	4,000 PSI NWC
D1.1SD25	5,000 PSI NWC
D1.1SD26	6,000 PSI NWC
	DUAL ANCHOR CONNECTIONS
D1.2SD23	3,000 PSI NWC
D1.2SD24	4,000 PSI NWC
	FOUR BOLT ANCHOR CONNECTIONS
	- PLATE
D1.4SD23	3,000 PSI NWC
D1.4SD24	4,000 PSI NWC
D1.4.1SD2	- H BRACKET
	DEWALT SCREW-BOLT+ CONCRETE SCREW ANCHOR
	SINGLE ANCHOR CONNECTIONS
D1.1DSB3	3,000 PSI NWC
D1.1DSB4	4,000 PSI NWC
D1.1DSB5	5,000 PSI NWC
D1.1DSB6	6,000 PSI NWC
	DUAL ANCHOR CONNECTIONS
D1.2DSB3	3,000 PSI NWC
D1.2DSB4	4,000 PSI NWC
	DEWALT SNAKE+ INTERNALLY THREADED SCREW ANCHOR
D1.1SN	SINGLE ANCHOR CONNECTION
D1.2SN	DUAL ANCHOR CONNECTION
	POWERS WEDGE-BOLT+ SCREW ANCHOR
	SINGLE ANCHOR CONNECTIONS
D1.1WB3	3,000 PSI NWC
D1.1WB4	4,000 PSI NWC
D1.1WB5	5,000 PSI NWC
D1.1WB6	6,000 PSI NWC
	DOUBLE ANCHOR CONNECTIONS
D1.2WB3	3,000 PSI NWC
D1.2WB4	4,000 PSI NWC
	C. CONNECTIONS TO CONCRETE STRUCTURAL MEMBERS
D1.6	BRACE CONNECTION TO VERTICAL SUPPORT ROD

REVIEWED FOR CODE COMPLIANCE
HCAI
OPM-0403
BY: William Staehlin
DATE: 01-26-2024
CALIFORNIA BUILDING CODE, 2022

REGISTERED PROFESSIONAL ENGINEER
MARCIN WASAZNIK
S 6612
STRUCTURAL
STATE OF CALIFORNIA

ISAT
A Division of Tomarco Contractor Specialties

International Seismic Application Technology
14848 Northam Street, La Mirada, CA 90638
877-999-4728 (Toll Free) 714-523-0845 (fax)
www.isatsb.com

INDEX - BRACE ARM ANCHORAGE DETAILS (CONTINUED)

PAGE	DESCRIPTION
	D2. CONNECTIONS TO METAL PAN DECKS, LIGHT/NORMAL WEIGHT CONCRETE (LWC/NWC)
D2	SCHEDULE OF ANCHOR CONNECTIONS – LIGHT WEIGHT CONCRETE (LWC)
	A. POURED-IN-PLACE (PIP) AND STEEL DECK INSERTS (SDI)
	BLUE BANGER HANGER STEEL DECK INSERT (SDI)
D2.1B	SINGLE "SDI"
D2.1.1B	SINGLE "SDI", FLUTE SPAN BRACKET (FSB)
D2.2B	DUAL SDI LOW FLUTE 3,000 PSI LWC/NWC
D2.3B	DUAL SDI HIGH FLUTE 3,000 PSI LWC/NWC, FLUTE SPAN BRACKET (FSB)
	HEADED BOLD (SDI-HB)
	SINGLE "SDI-HB" CONNECTIONS
D2.1HB3	3,000 PSI LWC / NWC
D2.1HB4	4,000 PSI LWC / NWC
D2.2HB	DUAL "SDI-HB" CONNECTION
	PUSH ROD HANGER STEEL DECK INSERT (PRSDI)
D2.1PR	SINGLE "PRSDI"; 3,000 THRU 4,000 PSI LWC/NWC
D2.2PR	DUAL "PRSDI"; 3,000 THRU 4,000 PSI LWC/NWC
	B. POST INSTALLED CONCRETE ANCHORS
	HILTI KWIK BOLT TZ2 EXPANSION ANCHOR
	SINGLE ANCHOR CONNECTIONS
D2.1TZ23	3,000 PSI LWC / NWC
D2.1TZ24	4,000 PSI LWC / NWC
D2.1TZ2B	3,000 & 4,000PSI LWC / NWC B DECK
	DUAL ANCHOR CONNECTIONS
D2.2TZ2	3,000 PSI LWC / NWC, STRUT CONNECTOR
D2.2TZ2B	3,000 PSI LWC / NWC, B DECK, STRUT CONNECTOR
D2.3TZ2	3,000 PSI LWC / NWC, HSS CONNECTOR
	FOUR BOLT ANCHOR CONNECTION DETAILS
D2.4TZ2	- PLATE
D2.4.1TZ2	- H BRACKET
	POWERS POWER-STUD+ SD2 WEDGE EXPANSION ANCHOR
	SINGLE ANCHOR CONNECTIONS
D2.1SD2B	3,000 PSI LWC 1.5" METAL DECK SLAB
D2.1SD2S	3,000 PSI LWC SHALLOW TOPPING SLAB
D2.1SD2S4	4,000 PSI LWC SHALLOW TOPPING SLAB
D2.1SD23	3,000 PSI LWC
D2.1SD24	4,000 PSI LWC
	DUAL ANCHOR CONNECTIONS
D2.2SD2	3,000 PSI LWC / NWC, STRUT CONNECTOR
D2.2SD2B	3,000 PSI LWC / NWC, B DECK, STRUT CONNECTOR
D2.2SD2S	3,000 PSI LWC / NWC SHALLOW TOPPING SLAB
D2.3SD2	3,000 PSI LWC / NWC, HSS CONNECTOR
	FOUR BOLT ANCHOR CONNECTION DETAILS
D2.4SD2	- PLATE
D2.4.1SD2	- H BRACKET

REVIEWED FOR CODE COMPLIANCE
HCAi
OPM-0403
BY: William Staehlin
DATE: 01-26-2024
CALIFORNIA BUILDING CODE, 2022

REGISTERED PROFESSIONAL ENGINEER
MARCIN WASAZNIK
S 6612
STRUCTURAL
STATE OF CALIFORNIA

ISAT
A Division of Tomarco Contractor Specialties

International Seismic Application Technology
14848 Northam Street, La Mirada, CA 90638
877-999-4728 (Toll Free) 714-523-0845 (fax)
www.isatsb.com

INDEX - BRACE ARM ANCHORAGE DETAILS (CONTINUED)

PAGE	DESCRIPTION
	CONNECTIONS TO METAL PAN DECKS, LIGHT/NORMAL WEIGHT CONCRETE (LWC/NWC) (CONTINUED)
	HILTI KWIK HUS-EZ CONCRETE SCREW ANCHOR
	SINGLE ANCHOR CONNECTIONS
D2.1HUS3	3,000 PSI
D2.1HUS4	4,000 PSI
	DUAL ANCHOR CONNECTIONS
D2.2HUS3	3,000 PSI
D2.2HUS4	4,000 PSI
	DEWALT SNAKE+ INTERNALLY THREADED SCREW ANCHOR
D2.1SN	SINGLE ANCHOR CONNECTION DETAILS
D2.2SN	DUAL ANCHOR CONNECTIONS – STRUT CONNECTOR
	DEWALT SCREW-BOLT+ CONCRETE SCREW ANCHOR
	SINGLE ANCHOR CONNECTIONS
D2.1DSB3	3,000 PSI LWC
D2.1DSB4	4,000 PSI LWC
	DUAL ANCHOR CONNECTIONS
D2.2DSB3	3,000 PSI LWC
D2.2DSB4	4,000 PSI LWC
	POWERS WEDGE-BOLT+ SCREW ANCHOR
	SINGLE ANCHOR CONNECTIONS
D2.1WB3	3,000 PSI NWC
D2.1WB4	4,000 PSI NWC
	DOUBLE ANCHOR CONNECTIONS
D2.2WB3	3,000 PSI NWC
D2.2WB4	4,000 PSI NWC
	C. ALTERNATE SEISMIC CONNECTIONS
D2.6	BRACE CONNECTION TO VERTICAL SUPPORT ROD
D2.7	3-BOLT BRACKET CONNECTOR
	D3. CONNECTIONS TO STEEL STRUCTURE
	SUPPLEMENTAL STEEL (BEAM TO BEAM) CONNECTIONS
D3.1	WIDE FLANGED BEAM SPANNING BETWEEN BEAMS
D3.2	3-1/4" X 1-5/8" B-B STRUT SPANNING BTWN. BEAMS – PARALLEL
D3.3	3-1/4" X 1-5/8" B-B STRUT SPANNING BTWN. BEAMS – PERP.
D3.3.1	3-1/4" X 1-5/8" B-B STRUT SPANNING BTWN. BEAMS – PERP.
D3.4	1-5/8" X 1-5/8" B-B STRUT SPANNING BTWN. BEAMS – PARALLEL
D3.5	1-5/8" X 1-5/8" B-B STRUT SPANNING BTWN. BEAMS – PERP.
D3.6	HSS SPANNING BETWEEN BEAMS
D3.7	HSS SUPPLEMENTAL STEEL
	D4. SINGLE BEAM CONNECTIONS
D4.1	WELDED SEISMIC ANCHORAGE TO WIDE FLANGED BEAM
D4.2	BOLTED SEISMIC CONNECTION TO WIDE FLANGED BEAM

REVIEWED FOR CODE COMPLIANCE
HCAi
OPM-0403
BY: William Staehlin
DATE: 01-26-2024
CALIFORNIA BUILDING CODE, 2022

REGISTERED PROFESSIONAL ENGINEER
MARCIN WASAZNIK
S 6612
STRUCTURAL
STATE OF CALIFORNIA

ISAT
A Division of Tomarco Contractor Specialties

International Seismic Application Technology
14848 Northam Street, La Mirada, CA 90638
877-999-4728 (Toll Free) 714-523-0845 (fax)
www.isatsb.com

D4.3.1	BC-4U BEAM CLAMP ASSEMBLY SEISMIC BRACE CONNECTION
D4.3.2	BC-5 BEAM CLAMP ASSEMBLY SEISMIC BRACE CONNECTION
D4.4.1	BC-4U BEAM CLAMP ASSEMBLY SEISMIC BRACE CONNECTION
D4.4.2	BC-5 BEAM CLAMP ASSEMBLY SEISMIC BRACE CONNECTION
D4.5.1	BC-4U BEAM CLAMP SEISMIC ANCHORAGE – CANTILEVERED
D4.5.2	BC-5 BEAM CLAMP SEISMIC ANCHORAGE – CANTILEVERED
D4.6.1	BC-4U BEAM CLAMP CONNECTION WITH STRUT – OFF CENTER
D4.6.2	BC-5 BEAM CLAMP CONNECTION WITH STRUT – OFF CENTER
D4.7	PHD Fig. 045 BEAM CLAMP ASSEMBLY SEISMIC BRACE CONNECTION

INDEX – BRACE ARM ANCHORAGE DETAILS (CONTINUED)

PAGE	*DESCRIPTION*
	D5. OPEN WEB STEEL TRUSS AND BAR JOIST
D5.1	PERPENDICULAR THRU BOLT TOP CHORD, OPEN WEB STEEL TRUSS
D5.2	PARALLEL THRU BOLT, OPEN WEB STEEL TRUSS
D5.3	PERPENDICULAR ADAPTER, TOP CHORD, OPEN WEB STEEL TRUSS
D5.4	PARALLEL ADAPTER TO OPEN WEB STEEL TRUSS
D5.5	STRUT CONNECTION TO STEEL BAR JOIST
D5.6	STRUCTURAL ANGLE AT STEEL BAR JOIST
D5.7	HSS SPANNING STEEL BAR JOIST
D5.8	CONNECTION TO METAL ROOF DECK
	D6. CONNECTIONS TO WOOD STRUCTURE
D6.1	INSTALLATION REQUIREMENTS - WOOD CONNECTIONS
	A. CONNECTIONS TO STRUCTURAL LUMBER
D6.2	THRU BOLT CONNECTIONS TO STRUCTURAL LUMBER
D6.3	LAG SCREW CONNECTIONS TO STRUCTURAL LUMBER
D6.4	LAG SCREW CONNECTION TO WOOD TRUSS
	D7. CONNECTIONS TO WOOD TJI'S
D7.1	THRU BOLT CONNECTIONS TO TJI - PERPENDICULAR
D7.2	THRU BOLT CONNECTIONS TO TJI - PARALLEL
D7.3	THRU BOLT CONNECTIONS TO TJI - BRACE BETWEEN JOISTS
D7.4	SPANNING OPEN WEB WOOD JOISTS
	D8. WALL CONNECTIONS
	A. POURED IN PLACE AND CMU
D8.1	CONNECTION TO POUR IN PLACE WALL – BLUE BANGER INSERT
D8.2	SINGLE ANCHOR CONNECTION TO GROUT FILLED 8" CMU
D8.3	SNGLE ANCHOR CONNECTION TO GROUT FILLED 12" CMU
D8.4	DUAL ANCHOR CONNECTION TO GROUT FILLED 8" CMU
D8.5	DUAL ANCHOR CONNECTION TO GROUT FILLED 12" CMU

REVIEWED FOR CODE COMPLIANCE
HCAi
OPM-0403
BY: William Staehlin
DATE: 01-26-2024
CALIFORNIA BUILDING CODE, 2022

B. METAL STUD GYPSUM BOARD WALLS

D8.6	TRANSVERSE BRACE CONNECTION
D8.6.1	TRANSVERSE BRACE CONNECTION
D8.7	SPLAYED BRACE CONNECTION
D8.7.1	DUAL STUD SPLAYED BRACE CONNECTION

C. WALL MOUNT BRACKET

D8.8	CASE 1
D8.9	CASE 1A
D8.10	CASE 2
D8.11	CASE 2A
D8.12	CASE 3
D8.13	CASE 3A

REVIEWED FOR CODE COMPLIANCE
HCAi
OPM-0403
BY: William Staehlin
DATE: 01-26-2024
CALIFORNIA BUILDING CODE, 2022

Schedule of Anchor Connections
For Seismic Brace Arm Attachments
Normal Weight Concrete
Form Pour Slab with Minimum Concrete Strength of 3,000 psi

Anchor Type: Powers	ISAT Anchor Designation	Maximum Load (P)[1] (lbs)
4SD21218P	N25	2,500
	N24	2,400
	N23	2,300
	N22	2,200
	N21	2,100
	N20	2,000
2SD25819S	N19	1,900
	N18	1,800
	N17	1,700
	N16	1,600
1SD25824	N15	1,500
	N14	1,400
	N13	1,300
	N12	1,200
	N11	1,100
1SD25819	N10	1,000
	N9	900
	N8	800
	N7	700
	N6	600
1SD21215	N5	500
1SD23812	N4	400
	N3	300
	N2	200
	N1	100

INSTRUCTIONS

A. THE "C" SERIES BRACING TABLES CALL-OUT THE REQUIRED "MIN. BRACE ANCHORAGE" FOR A GIVEN UTILITY AND "MAXIMUM SEISMIC DESIGN FORCE".

B. FROM ANY OF THE D SERIES PAGES, SELECT AN ANCHORAGE WITH A DESIGNATOR EQUAL TO OR HIGHER THAN THAT DISPLAYED UNDER THE HEADING "MIN. BRACE ANCHORAGE" WITHIN THE C SERIES BRACING TABLES.

C. UTILIZE ANCHORS FROM ONLY ONE MANUFACTURER. DO NOT MIX.

D. SELECT ANCHORAGES APPROPRIATE FOR THE MINIMUM SLAB THICKNESS AND MINIMUM CONCRETE STRENGTH.

REVIEWED FOR CODE COMPLIANCE
HCAI
OPM-0403
BY: William Staehlin
DATE: 01-26-2024
CALIFORNIA BUILDING CODE, 2022

1. SUITABLE FOR SEISMIC AXIAL BRACE ARM LOADS UP TO 60 DEGREES BRACE INCLINATION.

FORM POUR SLAB
SEISMIC RESTRAINT ANCHORAGE CONNECTIONS

REGISTERED PROFESSIONAL ENGINEER
MARCIN WASAZNIK
S 6612
STRUCTURAL
STATE OF CALIFORNIA

ISAT
A Division of Tomarco Contractor Specialties

International Seismic Application Technology
14848 Northam Street, La Mirada, CA 90638
877-999-4728 (Toll Free) 714-523-0845 (fax)
www.isatsb.com

Rev. 4
05/04/18

Page
D1

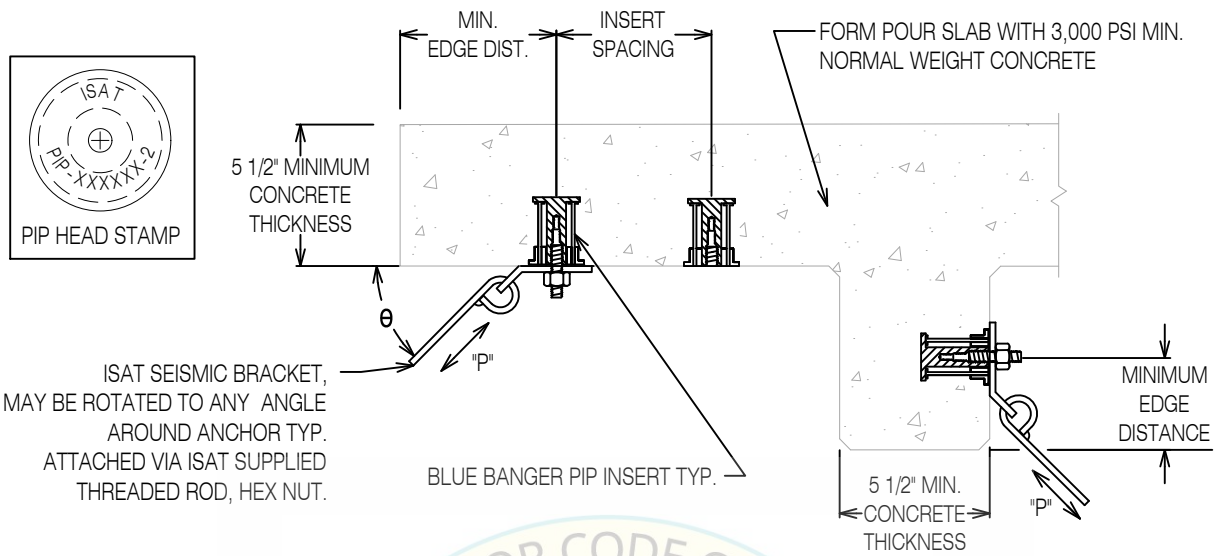

REVIEWED FOR CODE COMPLIANCE
HCAi
BY: William Staehlin
DATE: 01/26/2024
CALIFORNIA BUILDING CODE 2022

Blue Banger Hanger Poured-In-Place (PIP) Insert
Seismically Qualified for Anchorage In Cracked Concrete
Seismic Design Categories D, E and F
ICC Report No. ESR-3599 (November, 2017), Table 1

Brace Anchorage Designation	Deck Insert Part No.	All Thread Rod Dia. (ATR) Inch	Minimum Concrete Strength psi	Maximum Brace Reaction (Fp) [1]						Nominal Insert Height Inch	Minimum Edge Distance Inch
				6" Min. [2] Lbs		5" Min. [2] Lbs		4" Min. [2] Lbs			
				30°≤ θ ≤ 36°	36°< θ ≤ 60°	30°≤ θ ≤ 36°	36°< θ ≤ 60°	30°≤ θ ≤ 36°	36°< θ ≤ 60°		
N6B3	PIP143812-2	1/2	3,000	763	729	720	689	653	624	2	6
N6.1B3	PIP381258-2	5/8		812	776	752	719	683	652		
N7B4	PIP143812-2	1/2	4,000	881	842	832	795	754	720		
N7.1B4	PIP381258-2	5/8		937	896	868	830	788	753		
N8B5	PIP143812-2	1/2	5,000	985	941	930	889	843	805		
N8.1B5	PIP381258-2	5/8		1,048	1,001	971	1,001	881	842		
N8B6	PIP143812-2	1/2	6,000	1,079	1,031	1,019	974	923	882		
N9B6	PIP381258-2	5/8		1,148	1,097	1,063	1,016	965	923		

1. LOAD VALUES SHOWN ARE ALLOWABLE STRESS DESIGN (ASD). CAPACITIES DERIVED IN CONFORMANCE WITH ASCE 7-10, PIN 62 & ACI 318-11, Appendix D. Ωo=2.0
2. MINIMUM INSERT SPACING

SINGLE BLUE BANGER HANGER "PIP" INSERT SEISMIC BRACE CONNECTION

REGISTERED PROFESSIONAL ENGINEER MARCIN WASAZNIK S 6612 STRUCTURAL STATE OF CALIFORNIA

ISAT
A Division of Tomarco Contractor Specialties

International Seismic Application Technology
14848 Northam Street, La Mirada, CA 90638
877-999-4728 (Toll Free) 714-523-0845 (fax)
www.isatsb.com

Rev. 7
06/18/18

Page
D1.1B

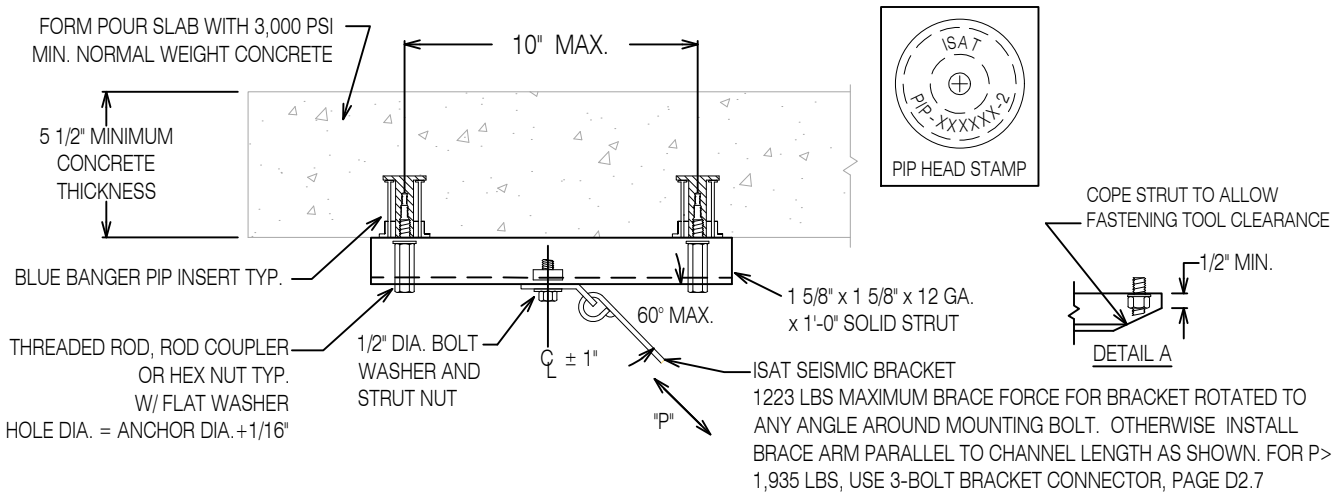

Blue Banger Hanger Poured-In-Place (PIP) Insert
Seismically Qualified for Anchorage In Cracked Concrete
Seismic Design Categories D, E and F
ICC Report No. ESR-3599 (November, 2017), Table 1

Brace [3] Anchorage Designation	Deck Insert Part No.	All Thread Rod Dia. (ATR) Inch	Minimum Concrete Strength psi	Maximum Brace Reaction (P) At Minimum Insert Spacing			Nominal Insert Height Inch	Full Capacity Edge Distance Inch
				6" Min. [4] Lbs	5" Min. [4] Lbs	4" Min. [4] Lbs		
N10B3	PIP143812-2	1/2	3,000 Bracket Rotated	1,223	1,155	1,047	2	10
N10.1B3	PIP381258-2	5/8 [2]		1,302	1,207	1,095		
N10.2B3	PIP143812-2	1/2	3,000 [5]	1,273	1,202	1,089		
N11B3	PIP381258-2	5/8 [2]		1,354	1,256	1,139		
N12B4	PIP143812-2	1/2	4,000 [5]	1,471	1,389	1,257		
N13B4	PIP381258-2	5/8 [2]		1,564	1,450	1,316		
N14B5	PIP143812-2	1/2	5,000 [5]	1,644	1,552	1,406		
N14.1B5	PIP381258-2	5/8 [2]		1,748	1,620	1,471		
N15B6	PIP143812-2	1/2	6,000 [5]	1,800	1,701	1,540		
N16B6	PIP381258-2	5/8 [2]		1,916	1,776	1,611		

1. LOAD VALUES SHOWN ARE ALLOWABLE STRESS DESIGN (ASD). CAPACITIES DERIVED IN CONFORMANCE WITH ASCE 7-10, PIN 62 & ACI 318-11, Appendix D. Ωo=2.0
2. USE DETAIL"A".
3. ANCHORAGE DESIGNATION BASED ON MINIMUM 6" SPACING.
4. TO THE NEAREST SOLITARY INSERT OR NEAREST PAIR OF DUAL INSERTS.
5. IN-LINE CAPACITIES SHOWN. USE 1223 LBS MAXIMUM FOR BRACKET ROTATED TO ANY ANGLE ABOUT MOUNTING BOLT.

DUAL BLUE BANGER HANGER "PIP" INSERT SEISMIC BRACE CONNECTION IN FORM POUR SLAB

REGISTERED PROFESSIONAL ENGINEER MARCIN WASAZNIK S 6612 STRUCTURAL STATE OF CALIFORNIA

ISAT
A Division of Tomarco Contractor Specialties
International Seismic Application Technology
14848 Northam Street, La Mirada, CA 90638
877-999-4728 (Toll Free) 714-523-0845 (fax)
www.isatsb.com

Rev. 8
10/05/18

Page
D1.2B

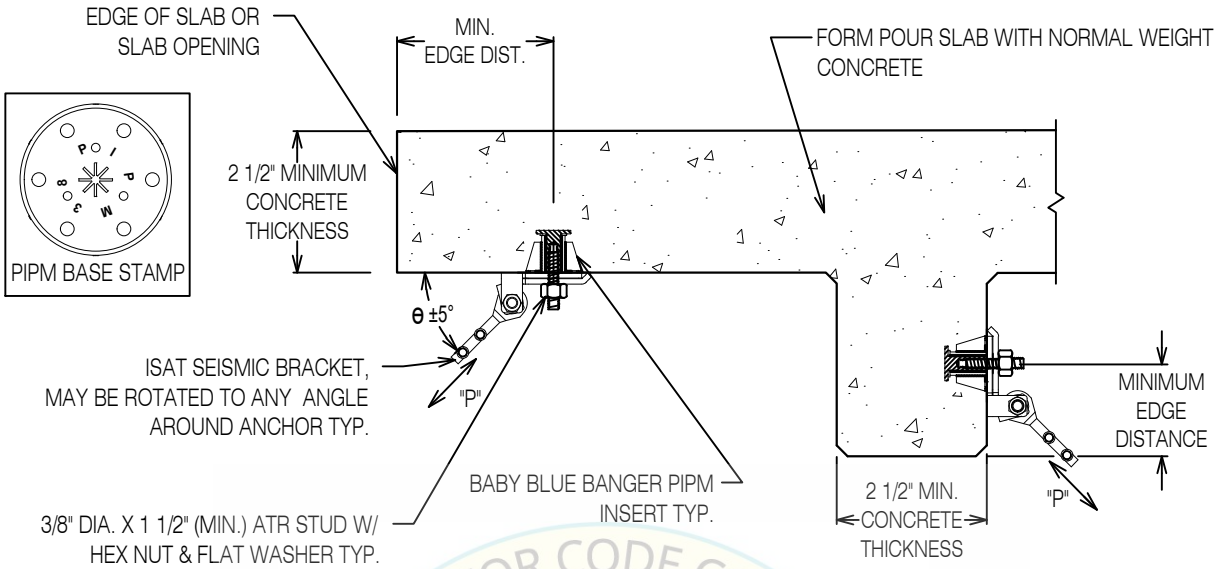

REVIEWED FOR CODE COMPLIANCE
HCAi
OPM-0403
BY: William Staehlin
DATE: 01-26-2024
CALIFORNIA BUILDING CODE 2022

ISAT Baby Blue Banger Hanger Poured-In-Place (PIP) Insert
Seismically Qualified For Anchorage In Cracked Concrete
Seismic Design Categories D, E and F
ICC Report No. ESR-3599 (Dated November 2022), Table 2

Brace Anchorage Designation	Deck Insert Part No.	All Thread Rod Dia. (ATR) Inch	Minimum Concrete Strength psi	Maximum Brace reaction (Fp)[1]						Nominal Insert Height Inch	Minimum Edge Distance Inch
				4" min[2] Lbs		3" min[2] Lbs		2" min[2] Lbs			
				30°≤ θ ≤36°	36°≤ θ ≤60°	30°≤ θ ≤36°	36°≤ θ ≤60°	30°≤ θ ≤36°	36°≤ θ ≤60°		
N3B3	PIPM38	3/8	3000	411	396	365	353	324	310	1.4	3
N3B4	PIPM38	3/8	4000	474	458	421	407	374	358		
N4B5	PIPM38	3/8	5000	527	509	471	455	419	400		
N4B6	PIPM38	3/8	6000	549	537	516	499	459	438		

1. LOAD VALUES SHOWN ARE ALLOWABLE STRESS DESIGN (ASD). CAPACITIES DERIVED IN CONFORMANCE WITH ASCE 7-16 AND ACI 318. Ω_O=2.0.
2. MINIMUM INSERT SPACING.
3. EFFECTIVE DEPTH = 1.27".

SINGLE BABY BLUE BANGER HANGER PIPM38 INSERT SEISMIC BRACE CONNECTION

REGISTERED PROFESSIONAL ENGINEER
MARCIN WASAZNIK
S-6612
STRUCTURAL
STATE OF CALIFORNIA

ISAT
A Division of Tomarco Contractor Specialties
International Seismic Application Technology
14848 Northam Street, La Mirada, CA 90638
877-999-4728 (Toll Free) 714-523-0845 (fax)
www.isatsb.com

Rev. 2
11/20/23
Page
D1.1BB

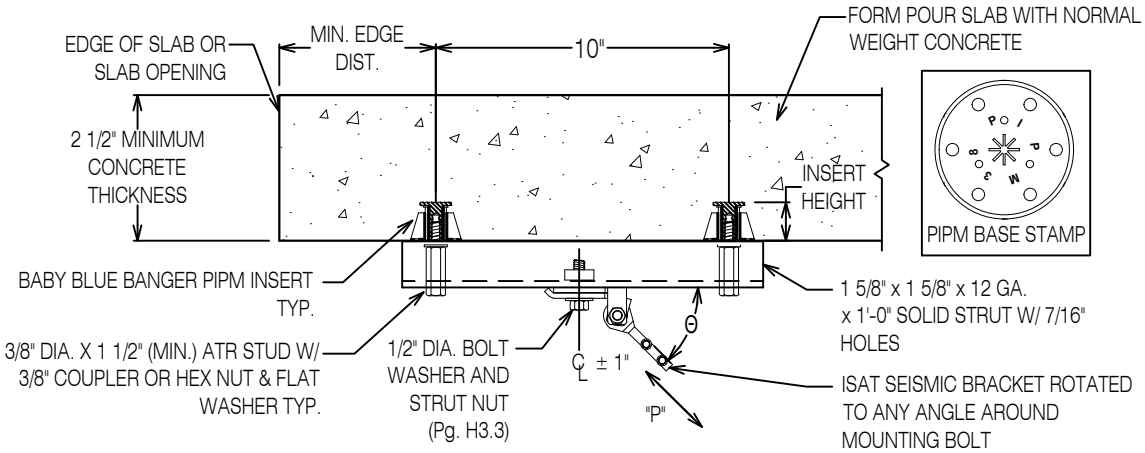

ISAT Baby Blue Banger Hanger Poured-In-Place (PIP) Insert
Seismically Qualified for Anchorage In Cracked Concrete
Seismic Design Categories D, E and F
ICC Report No. ESR-3599 (November 2022), Table 2

Brace [3] Anchorage Designation	Deck Insert Part No.	All Thread Rod Dia. (ATR) Inch	Minimum Concrete Strength psi	Maximum Brace Reaction (P) At Minimum Insert Spacing			Nominal Insert Height Inch	Full Capacity Edge Distance Inch
				4" Min. [4] Lbs	3" Min. [4] Lbs	2" Min. [4] Lbs		
N5BB3	PIPM38	3/8	3,000	665	590	520	1.4	3
N6BB4	PIPM38	3/8	4,000	767	682	600		
N6BB5	PIPM38	3/8	5,000	853	762	672		
N7BB6	PIPM38	3/8	6,000	895	835	735		

1. LOAD VALUES SHOWN ARE ALLOWABLE STRESS DESIGN (ASD). CAPACITIES DERIVED IN CONFORMANCE WITH ASCE 7-16 & ACI 318. Ωo=2.0
2. USE DETAIL "A".
3. ANCHORAGE DESIGNATION BASED ON MINIMUM 6" SPACING.
4. TO THE NEAREST SOLITARY INSERT OR NEAREST PAIR OF DUAL INSERTS.
5. EFFECTICE DEPTH = 1.27"

REVIEWED FOR CODE COMPLIANCE
OPM-0403
BY: William Staehlin
DATE: 01-26-2024
CALIFORNIA BUILDING CODE 2022

DUAL BABY BLUE BANGER HANGER PIPM38 INSERT SEISMIC BRACE CONNECTION IN FORM POUR SLAB

REGISTERED PROFESSIONAL ENGINEER
MARCIN WASAZNIK
S-6612
STRUCTURAL
STATE OF CALIFORNIA

ISAT
A Division of Tomarco Contractor Specialties

International Seismic Application Technology
14848 Northam Street, La Mirada, CA 90638
877-999-4728 (Toll Free) 714-523-0845 (fax)
www.isatsb.com

Rev. 2
11/21/23

Page
D1.2BB

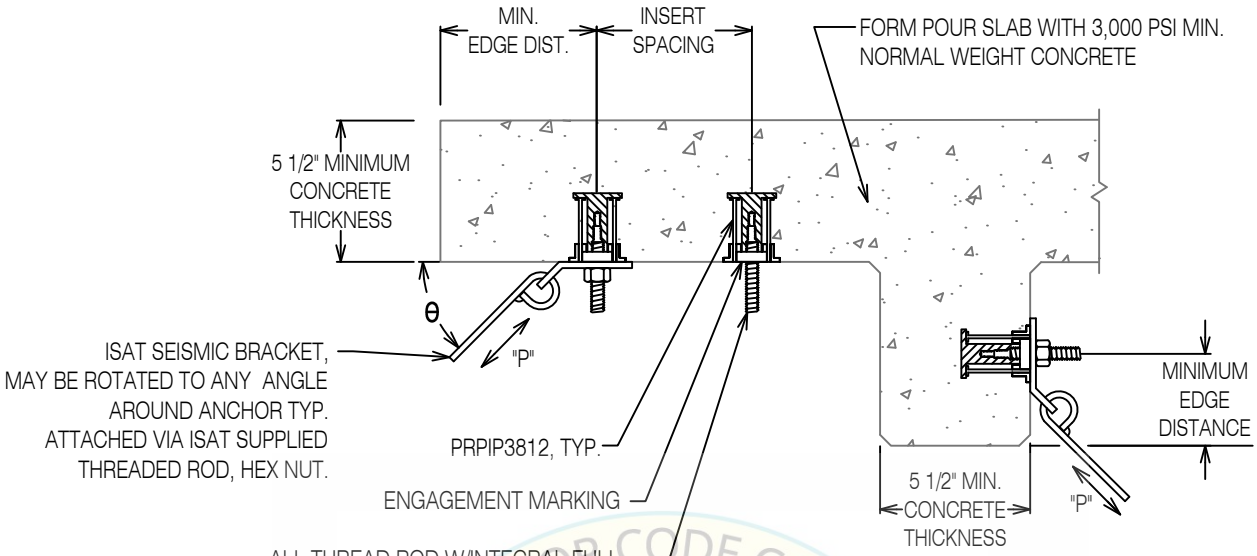

ALL THREAD ROD W/INTEGRAL FULL INSERTION VISUAL INDICATOR. INSERT ATR INTO THREADS OF STEEL BARREL UNTIL ATR BOTTOMS OUT.

PR HEAD STAMP

HCAi
OPM-0403
BY: William Staehlin
DATE: 01-26-2024
REVIEWED FOR CODE COMPLIANCE
CALIFORNIA BUILDING CODE 2022

Push Rod Poured-In-Place (PRPIP) Insert
Seismically Qualified for Anchorage In Cracked Concrete
Seismic Design Categories D, E and F
ICC Report No. ESR-3599 (November 2017), Table 2A

Brace Anchorage Designation	Deck Insert & All Thread Part No.	All Thread Rod Dia. (ATR) Inch [3]	Minimum Concrete Strength psi	Maximum Brace Reaction (P) [1] 6" Min. [2] Lbs		5" Min. [2] Lbs		4" Min. [2] Lbs		Nominal Insert Height Inch	Minimum Edge Distance Inch
				30°≤ θ ≤ 36°	36°< θ ≤ 60°	30°≤ θ ≤ 36°	36°< θ ≤ 60°	30°≤ θ ≤ 36°	36°< θ ≤ 60°		
N6PR3	PRPIP3812 & PRPIPR124	1/2	3,000	812	776	752	719	683	652	2	6
N7PR4			4,000	889	861	857	822	788	753		
N8PR5			5,000	935	917	903	879	863	830		
N8PR6			6,000	972	961	941	925	901	876		

1. LOAD VALUES SHOWN ARE ALLOWABLE STRESS DESIGN (ASD). CAPACITIES DERIVED IN CONFORMANCE WITH ASCE 7-10, PIN 62 & ACI 318-11, Appendix D. Ωo=2.0
2. MINIMUM INSERT SPACING
3. ISAT SUPPLIED ALL THREAD ROD REQUIRED WITH INTEGRAL "FULL INSERTION VISUAL INDICATOR".

SINGLE PUSH ROD POURED-IN-PLACE (PRPIP) INSERT SEISMIC BRACE CONNECTION

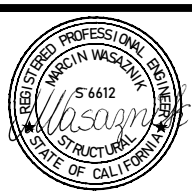

ISAT
A Division of Tomarco Contractor Specialties
International Seismic Application Technology
14848 Northam Street, La Mirada, CA 90638
877-999-4728 (Toll Free) 714-523-0845 (fax)
www.isatsb.com

Rev. 7
06/18/18

Page
D1.1PR

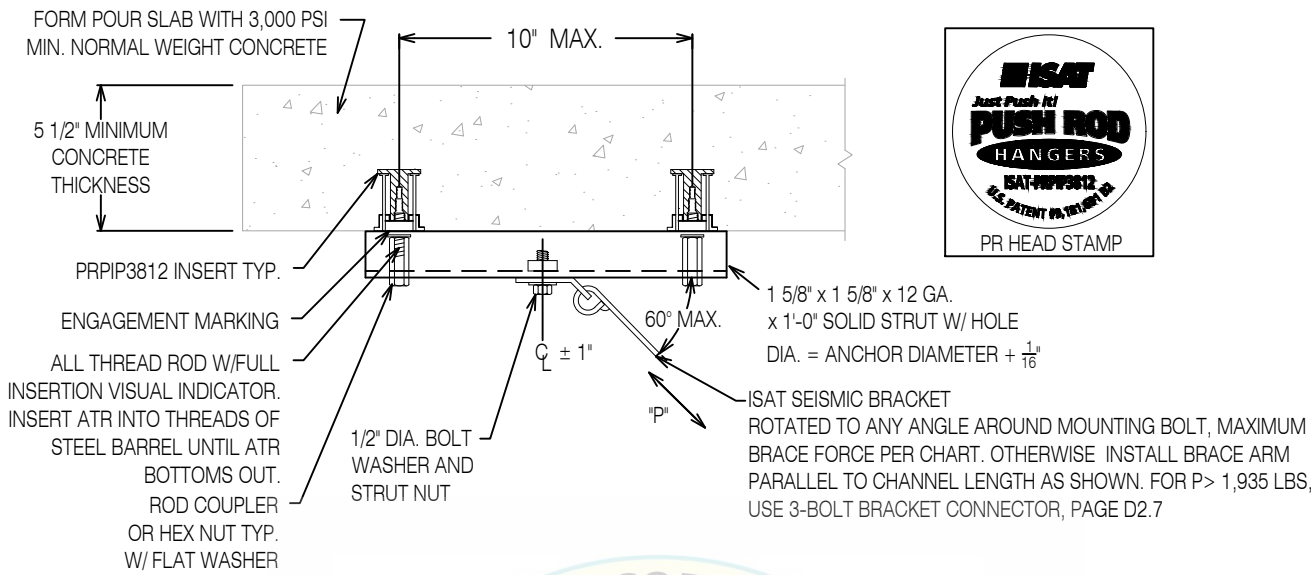

Push Rod Poured-In-Place (PRPIP) Insert
Seismically Qualified for Anchorage In Cracked Concrete
Seismic Design Categories D, E and F
ICC Report No. ESR-3599 (November 2017), Table 2A

Brace [2] Anchorage Designation	Deck Insert & All Thread Part No.	All Thread Rod Dia. (ATR) Inch	Minimum Concrete Strength psi	Maximum Brace Reaction (P) At Minimum Insert Spacing			Nominal Insert Height Inch	Full Capacity Edge Distance Inch
				6" Min. [3] Lbs	5" Min. [3] Lbs	4" Min. [3] Lbs		
N10PR3	PRPIP3812 & 2PRPIPR124	1/2	3,000 [6]	1,302	1,207	1,095	2	10
N11PR3			3,000 [4]	1,354	1,256	1,139		
N13PR4			4,000 [4]	1,500	1,438	1,316		
N14PR5			5,000 [4]	1,592	1,530	1,450		
N15PR6			6,000 [4]	1,667	1,604	1,524		

1. LOAD VALUES SHOWN ARE ALLOWABLE STRESS DESIGN (ASD). CAPACITIES DERIVED IN CONFORMANCE WITH ASCE 7-10, PIN 62 & ACI 318-11, Appendix D. Ωo=2.0
2. ANCHORAGE DESIGNATION BASED ON MINIMUM 6" SPACING.
3. TO THE NEAREST SOLITARY INSERT OR NEAREST PAIR OF DUAL INSERTS.
4. IN-LINE CAPACITIES SHOWN.
5. ISAT SUPPLIED ALL THREAD ROD REQUIRED WITH INTEGRAL "FULL INSERTION VISUAL INDICATOR".
6. BRACKET ROTATED.

DUAL PUSH ROD POURED-IN-PLACE (PRPIP) INSERT CONNECTION IN FORM POUR SLAB

REGISTERED PROFESSIONAL ENGINEER MARCIN WASAZNIK S 6612 STRUCTURAL STATE OF CALIFORNIA

ISAT
A Division of Tomarco Contractor Specialties

International Seismic Application Technology
14848 Northam Street, La Mirada, CA 90638
877-999-4728 (Toll Free) 714-523-0845 (fax)
www.isatsb.com

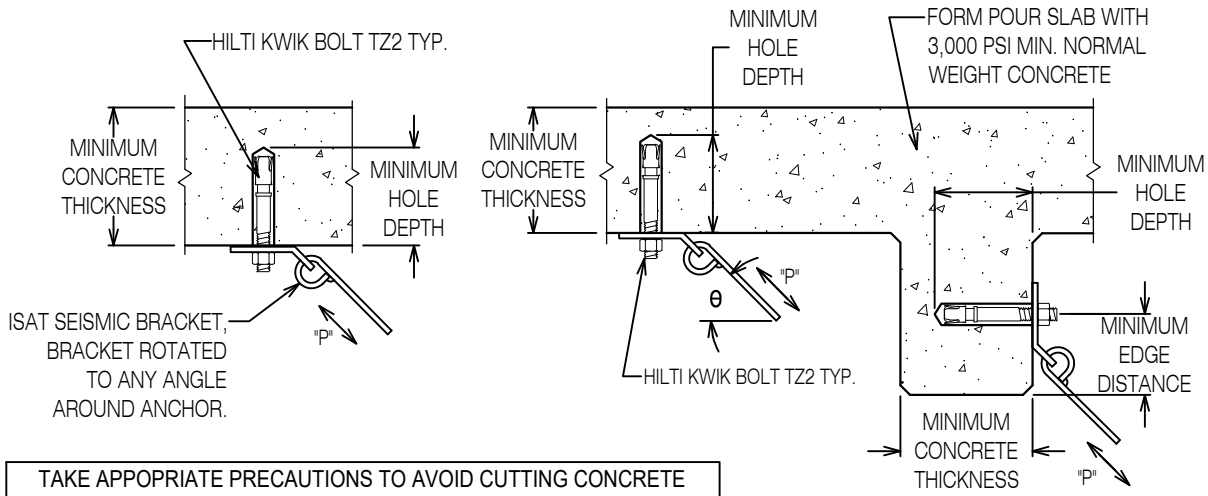

TAKE APPOPRIATE PRECAUTIONS TO AVOID CUTTING CONCRETE REINFORCING AND TENDONS WHEN INSTALLING RETROFIT ANCHORS.

Hilti Kwik Bolt TZ2 (Carbon Steel) Concrete Expansion Anchor, Minimum 3000 psi NWC
Seismically Qualified For Anchorage In Cracked Concrete
Seismic Design Categories D, E, and F
ICC Report No. ESR-4266 (Dated May 2023), Table 1, 3, 4, 6

Brace Anchorage Designation	Anchor Diameter Inch	Brace Angle 30°≤ θ ≤ 36° Maximum Brace Load Pmax[4] Lbs.	Brace Angle 36°< θ ≤ 60° Maximum Brace Load Pmax[4] Lbs.	Minimum Hole Depth Inch	Minimum Effective Embed.[1] Inch	Minimum Concrete Thickness Inch	Installation Torque Ft-Lbs.	Edge[3] Distance for Pmax Inch	Min.[2] Anchor Spacing Inch	Min. Edge Dist. Inch	Max Brace Load (P) at Min. Edge Distance[4] Lbs.
1TZ23815	3/8	668	642	2 3/4	2	4	30	4 1/2	6	2 1/2	346
1TZ21215	1/2	698	663	2 3/4	2	4	50	4 1/2	6	2 3/4	415
1TZ21222	1/2	1,198	1,128	4 1/4	3 1/4	5 1/2	50	6	9 3/4	2 1/4	372
1TZ25819	5/8	1,141	1,079	3 3/4	2 3/4	5	40	6	8 1/4	4 1/2	925
1TZ25824	5/8	1,791	1,628	4 3/4	4	6	40	8 3/4	12	2 3/4	542

1. MINIMUM EFFECTIVE EMBEDMENT IS AFTER THE ANCHOR HAS BEEN SET.
2. ANCHOR SPACING IS THE CENTER-TO-CENTER DISTANCE BETWEEN TWO ANCHORS.
3. AT CONCRETE CORNERS USE THE TABULATED VALUE FOR "EDGE DISTANCE FOR PMAX" FOR ONE EDGE WHERE THE "MIN. EDGE DISTANCE" IS USED FOR THE PERPENDICULAR CONCRETE FACE.
4. LOAD VALUES SHOWN ARE ALLOWABLE STRESS DESIGN (ASD). CAPACITIES DERIVED IN CONFORMANCE WITH ASCE 7-16 AND ACI 318. Ω_o=2.0
5. MAX BRACE LOAD "P" MAY BE LIMITED BY CAPACITY OF BRACE ATTACHMENT.

REVIEWED FOR CODE COMPLIANCE
OPM-0403
BY: William Staehlin
DATE: 01-26-2024
CALIFORNIA BUILDING CODE, 2022

SINGLE ANCHOR HILTI KWIK BOLT TZ2 FOR SEISMIC BRACE CONNECTION IN FORM POUR SLAB

REGISTERED PROFESSIONAL ENGINEER MARCIN WASAZNIK S-6612 STRUCTURAL STATE OF CALIFORNIA

ISAT
A Division of Tomarco Contractor Specialties
International Seismic Application Technology
14848 Northam Street, La Mirada, CA 90638
877-999-4728 (Toll Free) 714-523-0845 (fax)
www.isatsb.com

Rev. 2
11/21/23
Page
D1.1TZ23

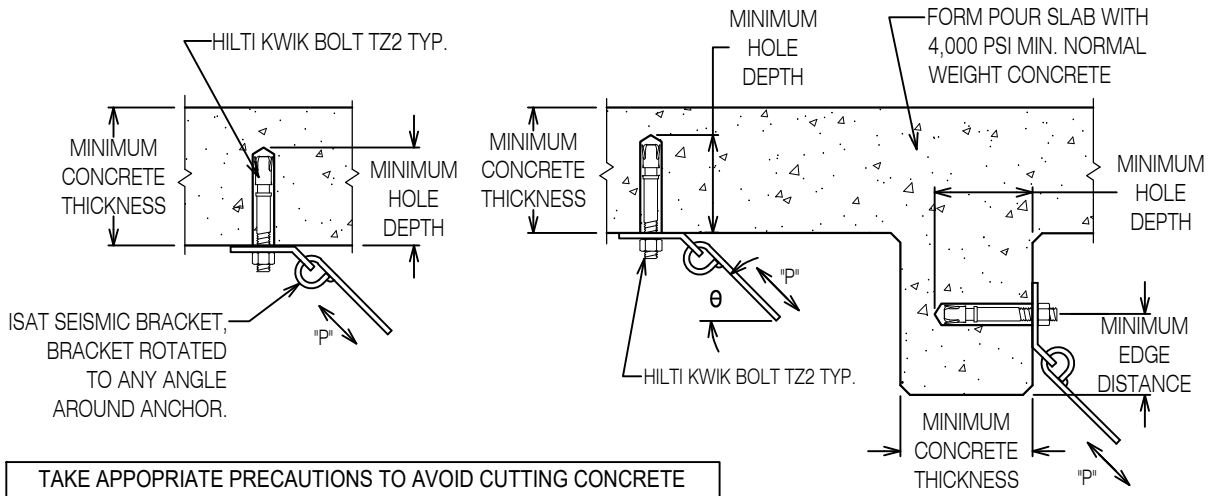

TAKE APPOPRIATE PRECAUTIONS TO AVOID CUTTING CONCRETE REINFORCING AND TENDONS WHEN INSTALLING RETROFIT ANCHORS.

Hilti Kwik Bolt TZ2 (Carbon Steel) Concrete Expansion Anchor, Minimum 4000 psi NWC
Seismically Qualified For Anchorage In Cracked Concrete
Seismic Design Categories D, E, and F
ICC Report No. ESR-4266 (Dated May 2023), Table 1, 3, 4, 6

Brace Anchorage Designation	Anchor Diameter Inch	Brace Angle 30°≤ θ ≤ 36° Maximum Brace Load Pmax[4] Lbs.	Brace Angle 36°< θ ≤ 60° Maximum Brace Load Pmax[4] Lbs.	Minimum Hole Depth Inch	Minimum Effective Embed.[1] Inch	Minimum Concrete Thickness Inch	Installation Torque Ft-Lbs.	Edge[3] Distance for Pmax Inch	Min.[2] Anchor Spacing Inch	Min. Edge Dist. Inch	Max Brace Load (P) at Min. Edge Distance[4] Lbs.
1TZ23815	3/8	728	709	2 3/4	2	4	30	4 1/2	6	2 1/2	400
1TZ21215	1/2	806	765	2 3/4	2	4	50	4 1/2	6	2 3/4	479
1TZ21222	1/2	1,381	1,302	4 1/4	3 1/4	5 1/2	50	6	9 3/4	2 1/4	429
1TZ25819	5/8	1,318	1,245	3 3/4	2 3/4	5	40	6	8 1/4	4 1/2	1068
1TZ25824	5/8	1,966	1,825	4 3/4	4	6	40	8 3/4	12	2 3/4	626

1. MINIMUM EFFECTIVE EMBEDMENT IS AFTER THE ANCHOR HAS BEEN SET.
2. ANCHOR SPACING IS THE CENTER-TO-CENTER DISTANCE BETWEEN TWO ANCHORS.
3. AT CONCRETE CORNERS USE THE TABULATED VALUE FOR "EDGE DISTANCE FOR PMAX" FOR ONE EDGE WHERE THE "MIN. EDGE DISTANCE" IS USED FOR THE PERPENDICULAR CONCRETE FACE.
4. LOAD VALUES SHOWN ARE ALLOWABLE STRESS DESIGN (ASD). CAPACITIES DERIVED IN CONFORMANCE WITH ASCE 7-16 AND ACI 318. Ω_o=2.0
5. MAX BRACE LOAD "P" MAY BE LIMITED BY CAPACITY OF BRACE ATTACHMENT.

REVIEWED FOR CODE COMPLIANCE
OPM-0403
BY: William Staehlin
DATE: 01-26-2024
CALIFORNIA BUILDING CODE, 2022

SINGLE ANCHOR HILTI KWIK BOLT TZ2 FOR SEISMIC BRACE CONNECTION IN FORM POUR SLAB

REGISTERED PROFESSIONAL ENGINEER MARCIN WASAZNIK S-6612 STRUCTURAL STATE OF CALIFORNIA

ISAT
A Division of Tomarco Contractor Specialties
International Seismic Application Technology
14848 Northam Street, La Mirada, CA 90638
877-999-4728 (Toll Free) 714-523-0845 (fax)
www.isatsb.com

Rev. 2
11/21/23

Page
D1.1TZ24

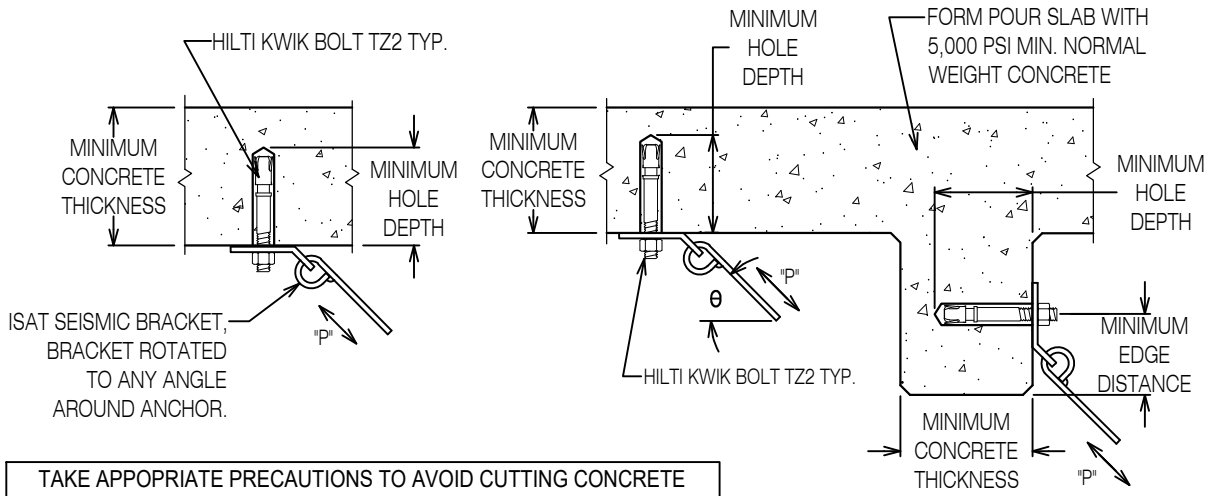

TAKE APPOPRIATE PRECAUTIONS TO AVOID CUTTING CONCRETE REINFORCING AND TENDONS WHEN INSTALLING RETROFIT ANCHORS.

Hilti Kwik Bolt TZ2 (Carbon Steel) Concrete Expansion Anchor, Minimum 5000 psi NWC
Seismically Qualified For Anchorage In Cracked Concrete
Seismic Design Categories D, E, and F
ICC Report No. ESR-4266 (Dated May 2023), Table 1, 3, 4, 6

Brace Anchorage Designation	Anchor Diameter Inch	Brace Angle 30°≤ θ ≤ 36° Maximum Brace Load Pmax[4] Lbs.	Brace Angle 36°< θ ≤ 60° Maximum Brace Load Pmax[4] Lbs.	Minimum Hole Depth Inch	Minimum Effective Embed.[1] Inch	Minimum Concrete Thickness Inch	Installation Torque Ft-Lbs.	Edge[3] Distance for Pmax Inch	Min.[2] Anchor Spacing Inch	Min. Edge Dist. Inch	Max Brace Load (P) at Min. Edge Distance[4] Lbs.
1TZ23815	3/8	764	753	2 3/4	2	4	30	4 1/2	6	2 1/2	447
1TZ21215	1/2	901	856	2 3/4	2	4	50	4 1/2	6	2 3/4	536
1TZ21222	1/2	1,460	1,400	4 1/4	3 1/4	5 1/2	50	6	9 3/4	2 1/4	480
1TZ25819	5/8	1,473	1,392	3 3/4	2 3/4	5	40	6	8 1/4	4 1/2	1195
1TZ25824	5/8	2,084	1,972	4 3/4	4	6	40	8 3/4	12	2 3/4	700

1. MINIMUM EFFECTIVE EMBEDMENT IS AFTER THE ANCHOR HAS BEEN SET.
2. ANCHOR SPACING IS THE CENTER-TO-CENTER DISTANCE BETWEEN TWO ANCHORS.
3. AT CONCRETE CORNERS USE THE TABULATED VALUE FOR "EDGE DISTANCE FOR PMAX" FOR ONE EDGE WHERE THE "MIN. EDGE DISTANCE" IS USED FOR THE PERPENDICULAR CONCRETE FACE.
4. LOAD VALUES SHOWN ARE ALLOWABLE STRESS DESIGN (ASD). CAPACITIES DERIVED IN CONFORMANCE WITH ASCE 7-16 AND ACI 318. Ω_o=2.0
5. MAX BRACE LOAD "P" MAY BE LIMITED BY CAPACITY OF BRACE ATTACHMENT.

REVIEWED FOR CODE COMPLIANCE BY: OPM-0403 William Staehlin DATE: 01-26-2024 CALIFORNIA BUILDING CODE, 2022

SINGLE ANCHOR HILTI KWIK BOLT TZ2 FOR SEISMIC BRACE CONNECTION IN FORM POUR SLAB

REGISTERED PROFESSIONAL ENGINEER MARCIN WASAZNIK S-6612 STRUCTURAL STATE OF CALIFORNIA

ISAT
A Division of Tomarco Contractor Specialties

International Seismic Application Technology
14848 Northam Street, La Mirada, CA 90638
877-999-4728 (Toll Free) 714-523-0845 (fax)
www.isatsb.com

Rev. 2
11/21/23

Page
D1.1TZ25

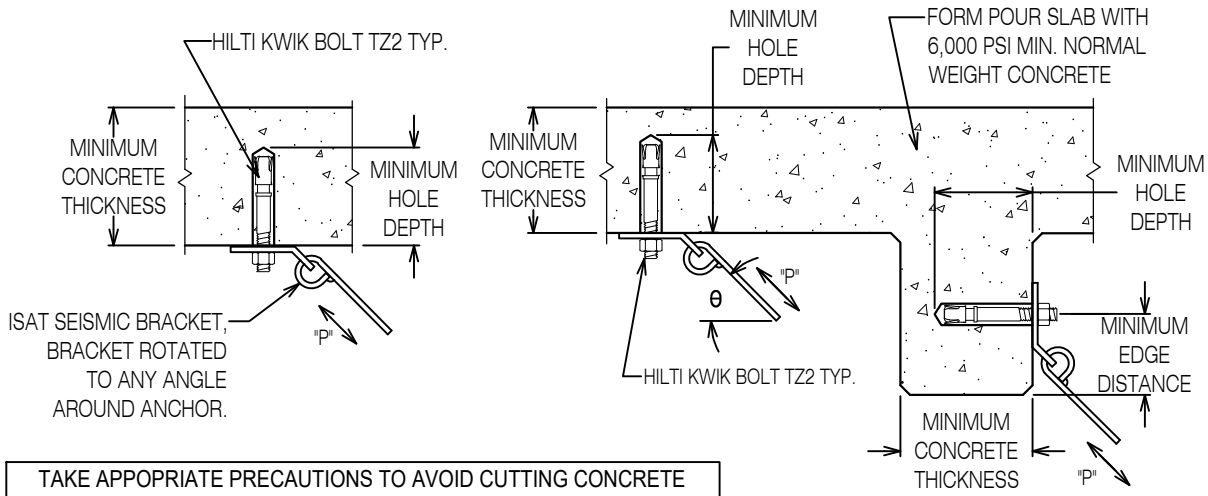

TAKE APPOPRIATE PRECAUTIONS TO AVOID CUTTING CONCRETE REINFORCING AND TENDONS WHEN INSTALLING RETROFIT ANCHORS.

Hilti Kwik Bolt TZ2 (Carbon Steel) Concrete Expansion Anchor, Minimum 6000 psi NWC
Seismically Qualified For Anchorage In Cracked Concrete
Seismic Design Categories D, E, and F
ICC Report No. ESR-4266 (Dated May 2023), Table 1, 3, 4, 6

Brace Anchorage Designation	Anchor Diameter Inch	Brace Angle 30°≤ θ ≤ 36° Maximum Brace Load Pmax[4] Lbs.	Brace Angle 36°< θ ≤ 60° Maximum Brace Load Pmax[4] Lbs.	Minimum Hole Depth Inch	Minimum Effective Embed.[1] Inch	Minimum Concrete Thickness Inch	Installation Torque Ft-Lbs.	Edge[3] Distance for Pmax Inch	Min.[2] Anchor Spacing Inch	Min. Edge Dist. Inch	Max Brace Load (P) at Min. Edge Distance[4] Lbs.
1TZ23815	3/8	794	788	2 3/4	2	4	30	4 1/2	6	2 1/2	490
1TZ21215	1/2	987	937	2 3/4	2	4	50	4 1/2	6	2 3/4	587
1TZ21222	1/2	1,525	1,480	4 1/4	3 1/4	5 1/2	50	6	9 3/4	2 1/4	526
1TZ25819	5/8	1,614	1,525	3 3/4	2 3/4	5	40	6	8 1/4	4 1/2	1309
1TZ25824	5/8	2,181	2,092	4 3/4	4	6	40	8 3/4	12	2 3/4	766

1. MINIMUM EFFECTIVE EMBEDMENT IS AFTER THE ANCHOR HAS BEEN SET.
2. ANCHOR SPACING IS THE CENTER-TO-CENTER DISTANCE BETWEEN TWO ANCHORS.
3. AT CONCRETE CORNERS USE THE TABULATED VALUE FOR "EDGE DISTANCE FOR PMAX" FOR ONE EDGE WHERE THE "MIN. EDGE DISTANCE" IS USED FOR THE PERPENDICULAR CONCRETE FACE.
4. LOAD VALUES SHOWN ARE ALLOWABLE STRESS DESIGN (ASD). CAPACITIES DERIVED IN CONFORMANCE WITH ASCE 7-16 AND ACI 318. Ω_o=2.0
5. MAX BRACE LOAD "P" MAY BE LIMITED BY CAPACITY OF BRACE ATTACHMENT.

REVIEWED FOR CODE COMPLIANCE
OPM-0403
BY: William Staehlin
DATE: 01-26-2024
CALIFORNIA BUILDING CODE, 2022

SINGLE ANCHOR HILTI KWIK BOLT TZ2 FOR SEISMIC BRACE CONNECTION IN FORM POUR SLAB

REGISTERED PROFESSIONAL ENGINEER MARCIN WASAZNIK S-6612 STRUCTURAL STATE OF CALIFORNIA

ISAT
A Division of Tomarco Contractor Specialties
International Seismic Application Technology
14848 Northam Street, La Mirada, CA 90638
877-999-4728 (Toll Free) 714-523-0845 (fax)
www.isatsb.com

Rev. 2
11/21/23

Page
D1.1TZ26

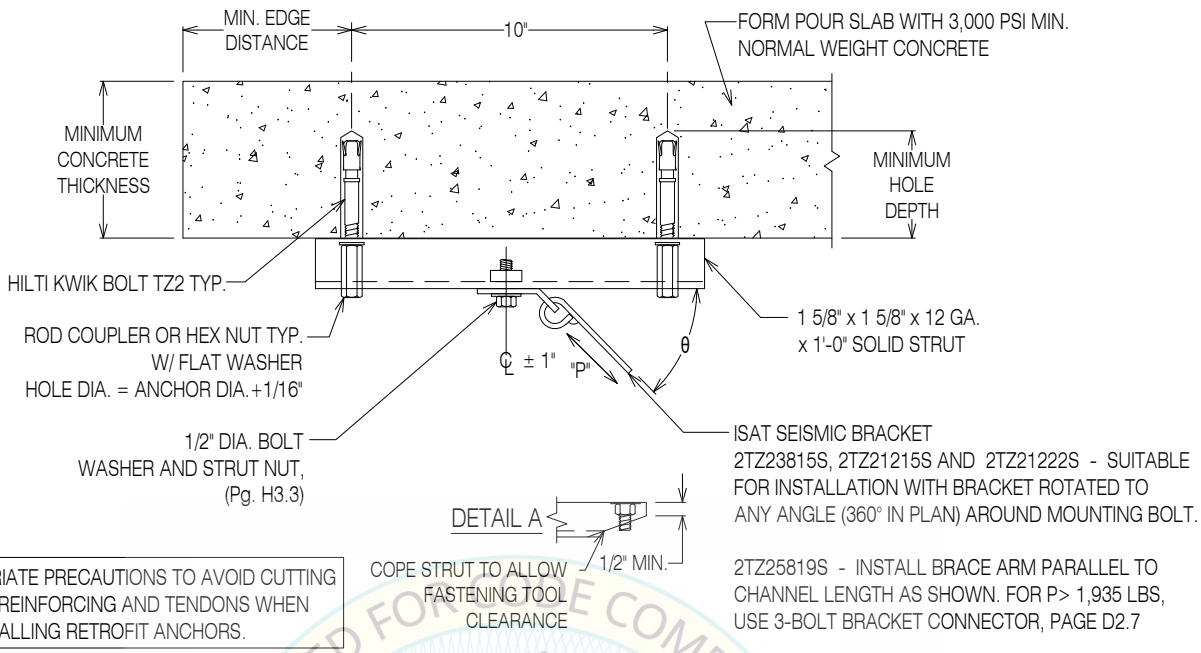

TAKE APPROPRIATE PRECAUTIONS TO AVOID CUTTING CONCRETE REINFORCING AND TENDONS WHEN INSTALLING RETROFIT ANCHORS.

REVIEWED FOR CODE COMPLIANCE
HCAi
OPM-0403
Dr. William Staehlin
DATE: 01-26-2024
CALIFORNIA BUILDING CODE, 2022

Hilti Kwik Bolt TZ2 (Carbon Steel) Concrete Expansion Anchor, Minimum 3000 NWC
Seismically Qualified For Anchorage In Cracked Concrete
Seismic Design Categories D, E and F
ICC Report No. ESR-4266 (Dated May 2023), Table 4

Brace Anchorage Designation	Anchor Diameter Inch	Brace Angle 30° ≤ θ ≤ 36° Maximum Brace Load (P) Lbs.	Brace Angle 36° < θ ≤ 60° Maximum Brace Load (P) Lbs.	Minimum Hole Depth Inch	Minimum Effective Embed. [1] Inch	Minimum Concrete Thickness Inch	Installation Torque Ft-Lbs.	Minimum Edge Distance Inch
2TZ23815S	3/8	1,113	1,078	2 3/4	2	4	30	4 1/2
2TZ21215S	1/2	1,163	1,110	2 3/4	2	4	50	4 1/2
2TZ21222S	1/2	1,315	1,315	4 1/4	3 1/4	5 1/2	50	6
2TZ25819S	5/8[4]	1,936	1,895	3 3/4	2 3/4	5	40	6

1. MINIMUM EFFECTIVE DEPTH IS AFTER THE ANCHOR HAS BEEN SET.
2. MINIMUM SPACING TO AN ADJACENT ANCHOR IS TWO TIMES THE TABULATED EDGE DISTANCE.
3. LOAD VALUES SHOWN ARE ALLOWABLE STRESS DESIGN (ASD). CAPACITIES DERIVED IN CONFORMANCE WITH ASCE 7-16 AND ACI 318. Ω_o=2.0
4. USE DETAIL A.

DUAL ANCHOR HILTI KWIK BOLT TZ2 WITH STRUT SEISMIC BRACE CONNECTION IN FORM POUR SLAB

REGISTERED PROFESSIONAL ENGINEER MARCIN WASAZNIK S 6612 STRUCTURAL STATE OF CALIFORNIA

ISAT
A Division of Tomarco Contractor Specialties
International Seismic Application Technology
14848 Northam Street, La Mirada, CA 90638
877-999-4728 (Toll Free) 714-523-0845 (fax)
www.isatsb.com

Rev. 2
11/21/23
Page
D1.2TZ23

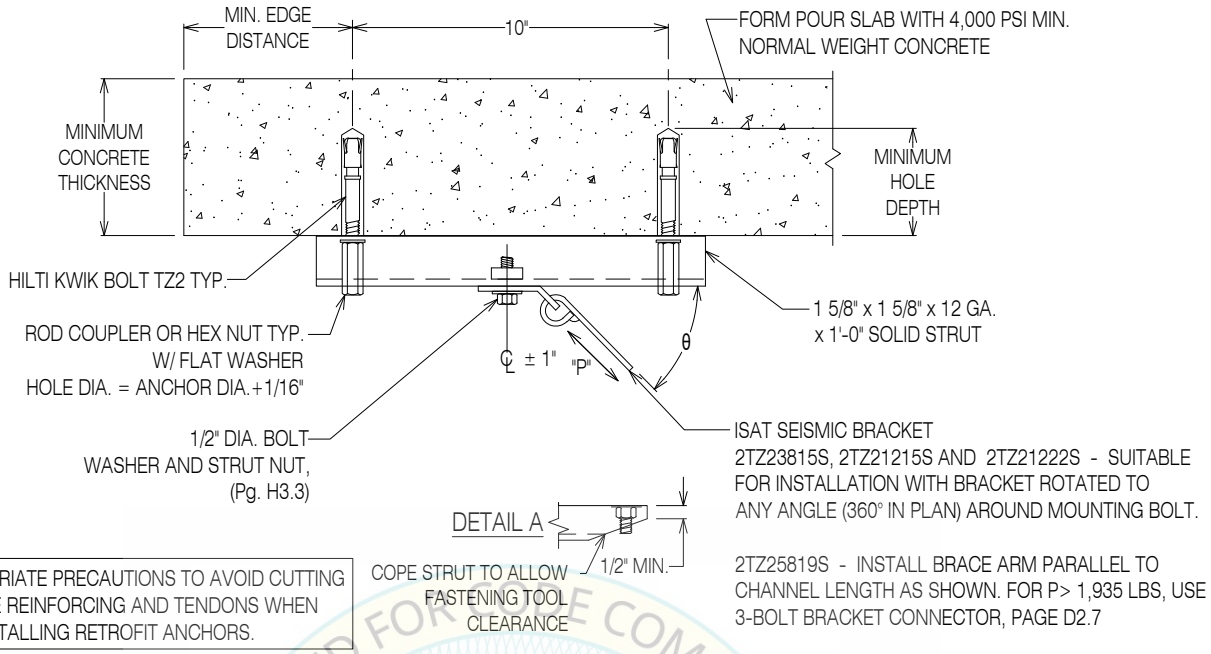

TAKE APPROPRIATE PRECAUTIONS TO AVOID CUTTING CONCRETE REINFORCING AND TENDONS WHEN INSTALLING RETROFIT ANCHORS.

Hilti Kwik Bolt TZ2 (Carbon Steel) Concrete Expansion Anchor, Minimum 4000 psi NWC
Seismically Qualified For Anchorage In Cracked Concrete
Seismic Design Categories D, E and F
ICC Report No. ESR-4266 (Dated May 2023), Table 4

Brace Anchorage Designation	Anchor Diameter Inch	Brace Angle $30° \leq \theta \leq 36°$ Maximum Brace Load (P) Lbs.	Brace Angle $36° < \theta \leq 60°$ Maximum Brace Load (P) Lbs.	Minimum Hole Depth Inch	Minimum Effective Embed. [1] Inch	Minimum Concrete Thickness Inch	Installation Torque Ft-Lbs.	Minimum Edge Distance Inch
2TZ23815S	3/8	1,213	1,185	2 3/4	2	4	30	4 1/2
2TZ21215S	1/2	1,315	1,281	2 3/4	2	4	50	4 1/2
2TZ21222S	1/2	1,315	1,315	4 1/4	3 1/4	5 1/2	50	6
2TZ25819S	5/8[4]	1,936	1,936	3 3/4	2 3/4	5	40	6

1. MINIMUM EFFECTIVE DEPTH IS AFTER THE ANCHOR HAS BEEN SET.
2. MINIMUM SPACING TO AN ADJACENT ANCHOR IS TWO TIMES THE TABULATED EDGE DISTANCE.
3. LOAD VALUES SHOWN ARE ALLOWABLE STRESS DESIGN (ASD). CAPACITIES DERIVED IN CONFORMANCE WITH ASCE 7-16 AND ACI 318. Ω_o=2.0
4. USE DETAIL A.

REVIEWED FOR CODE COMPLIANCE
OPM-0403
BY: William Staehlin
DATE: 01-26-2024
CALIFORNIA BUILDING CODE 2022

DUAL ANCHOR HILTI KWIK BOLT TZ2 WITH STRUT SEISMIC BRACE CONNECTION IN FORM POUR SLAB

REGISTERED PROFESSIONAL ENGINEER MARCIN WASAZNIK S 6612 STRUCTURAL STATE OF CALIFORNIA

ISAT
A Division of Tomarco Contractor Specialties

International Seismic Application Technology
14848 Northam Street, La Mirada, CA 90638
877-999-4728 (Toll Free) 714-523-0845 (fax)
www.isatsb.com

Rev. 2
11/21/23
Page
D1.2TZ24

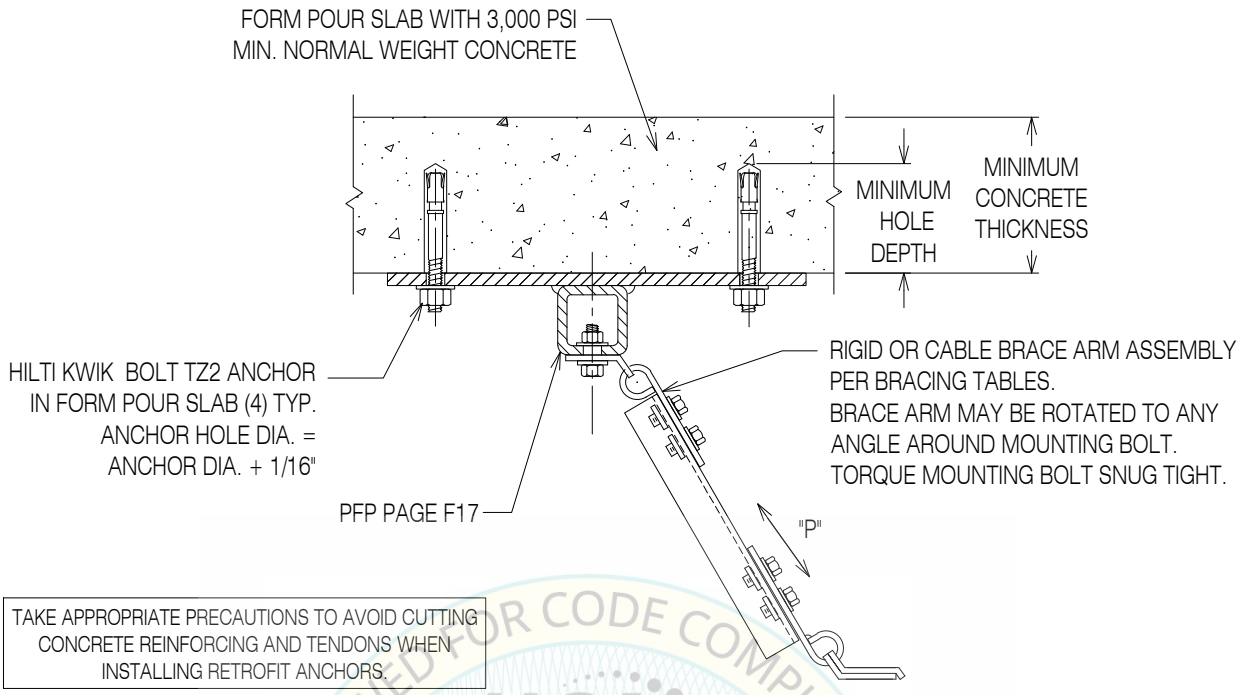

TAKE APPROPRIATE PRECAUTIONS TO AVOID CUTTING CONCRETE REINFORCING AND TENDONS WHEN INSTALLING RETROFIT ANCHORS.

REVIEWED FOR CODE COMPLIANCE
HCAi
OPM-0403
BY: William Staehlin
DATE: 01/26/2024
CALIFORNIA BUILDING CODE, 2022

Hilti Kwik Bolt TZ2 (Carbon Steel) Concrete Expansion Anchor, Minimum 3000 psi NWC
Seismically Qualified For Anchorage In Cracked Concrete
Seismic Design Categories D, E, and F
ICC Report No. ESR-4266 (Dated May 2023), Table 4

Brace Anchorage Designation	Anchor Diameter Inch	Maximum Brace Load (P) Lbs.	Minimum Hole Depth Inch	Minimum Effective Embed.[1] Inch	Minimum Concrete Thickness Inch	Installation Torque Ft-Lbs.	Minimum Edge Distance Inch	Plate Number Page F17	Mounting Bolt Diameter Inch	Mounting Bolt Torque Ft-Lbs.
4TZ23815P	3/8	1,813	2 3/4	2	4	30	4 1/2	D134	1/2	50
4TZ21222P	1/2	3,128	4 1/4	3 1/4	5 1/2	50	6	D145	5/8	65
4TZ25824P	5/8	4,238	4 3/4	4	6	40	8 3/4	D155	5/8	

1. MINIMUM EFFECTIVE DEPTH IS AFTER THE ANCHOR HAS BEEN SET.
2. LOAD VALUES SHOWN ARE ALLOWABLE STRESS DESIGN (ASD). CAPACITIES DERIVED IN CONFORMANCE WITH ASCE 7-16 AND ACI 318. Ω_o=2.0
3. MAX BRACE LOAD "P" MAY BE LIMITED BY CAPACITY OF BRACE ATTACHMENT OR BRACE MEMBER.

4-ANCHOR HILTI KWIK BOLT TZ2
PLATE IN FORM POUR SLAB (PFP)

REGISTERED PROFESSIONAL ENGINEER
MARCIN WASAZNIK
S-6612
STRUCTURAL
STATE OF CALIFORNIA

ISAT
A Division of Tomarco Contractor Specialties
International Seismic Application Technology
14848 Northam Street, La Mirada, CA 90638
877-999-4728 (Toll Free) 714-523-0845 (fax)
www.isatsb.com

Rev. 2
11/21/23
Page
D1.4TZ23

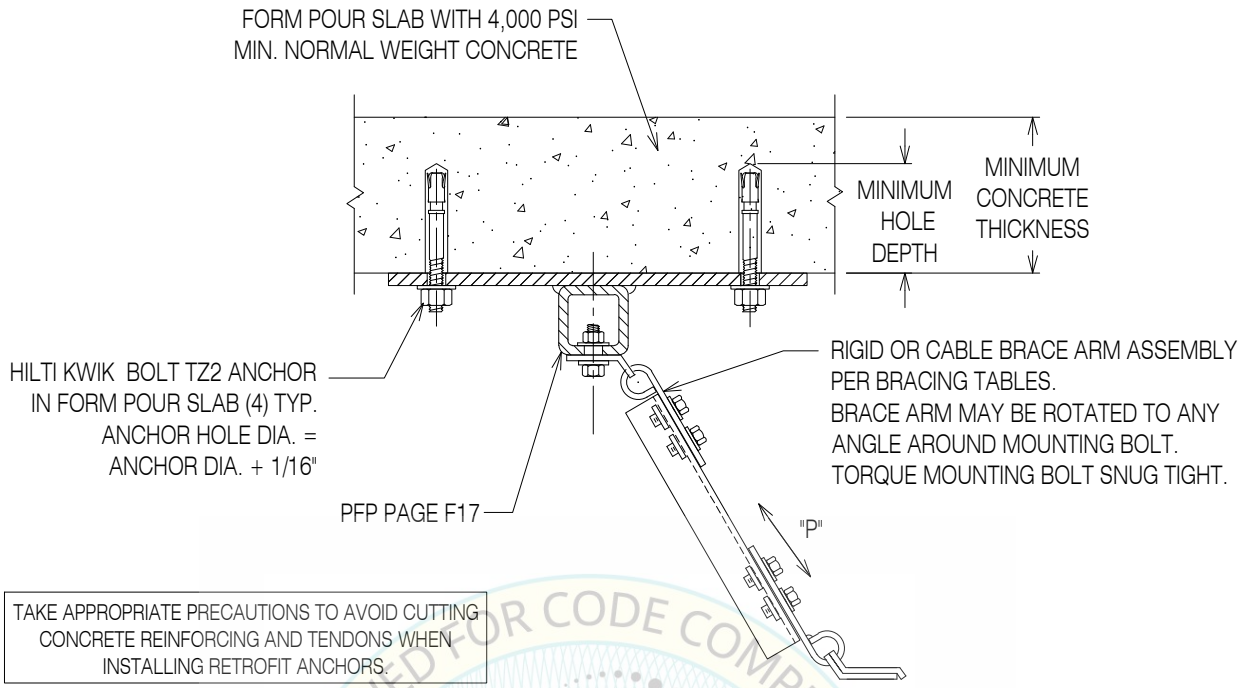

TAKE APPROPRIATE PRECAUTIONS TO AVOID CUTTING CONCRETE REINFORCING AND TENDONS WHEN INSTALLING RETROFIT ANCHORS.

REVIEWED FOR CODE COMPLIANCE
HCAi
OPM-0403
DATE: 01-26-2024
CALIFORNIA BUILDING CODE 2022

Hilti Kwik Bolt TZ2 (Carbon Steel) Concrete Expansion Anchor, Minimum 4000 psi NWC
Seismically Qualified For Anchorage In Cracked Concrete
Seismic Design Categories D, E, and F
ICC Report No. ESR-4266 (Dated May 2023), Table 4

Brace Anchorage Designation	Anchor Diameter Inch	Maximum Brace Load (P) Lbs.	Minimum Hole Depth Inch	Minimum Effective Embed.[1] Inch	Minimum Concrete Thickness Inch	Installation Torque Ft-Lbs.	Minimum Edge Distance Inch	Plate Number Page F17	Mounting Bolt Diameter Inch	Mounting Bolt Torque Ft-Lbs.
4TZ23815P	3/8	2,022	2 3/4	2	4	30	4 1/2	D134	1/2	50
4TZ21222P	1/2	3,608	4 1/4	3 1/4	5 1/2	50	6	D145	5/8	65
4TZ25824P	5/8	4,238	4 3/4	4	6	40	8 3/4	D155	5/8	

1. MINIMUM EFFECTIVE DEPTH IS AFTER THE ANCHOR HAS BEEN SET.
2. LOAD VALUES SHOWN ARE ALLOWABLE STRESS DESIGN (ASD). CAPACITIES DERIVED IN CONFORMANCE WITH ASCE 7-16 AND ACI 318. Ω_o=2.0
3. MAX BRACE LOAD "P" MAY BE LIMITED BY CAPACITY OF BRACE ATTACHMENT OR BRACE MEMBER.

4-ANCHOR HILTI KWIK BOLT TZ2 PLATE IN FORM POUR SLAB (PFP)

REGISTERED PROFESSIONAL ENGINEER MARCIN WASAZNIK S-6612 STRUCTURAL STATE OF CALIFORNIA

ISAT
A Division of Tomarco Contractor Specialties
International Seismic Application Technology
14848 Northam Street, La Mirada, CA 90638
877-999-4728 (Toll Free) 714-523-0845 (fax)
www.isatsb.com

Rev. 2
11/21/23
Page
D1.4TZ24

TAKE APPROPRIATE PRECAUTIONS TO AVOID CUTTING CONCRETE REINFORCING AND TENDONS WHEN INSTALLING RETROFIT ANCHORS.

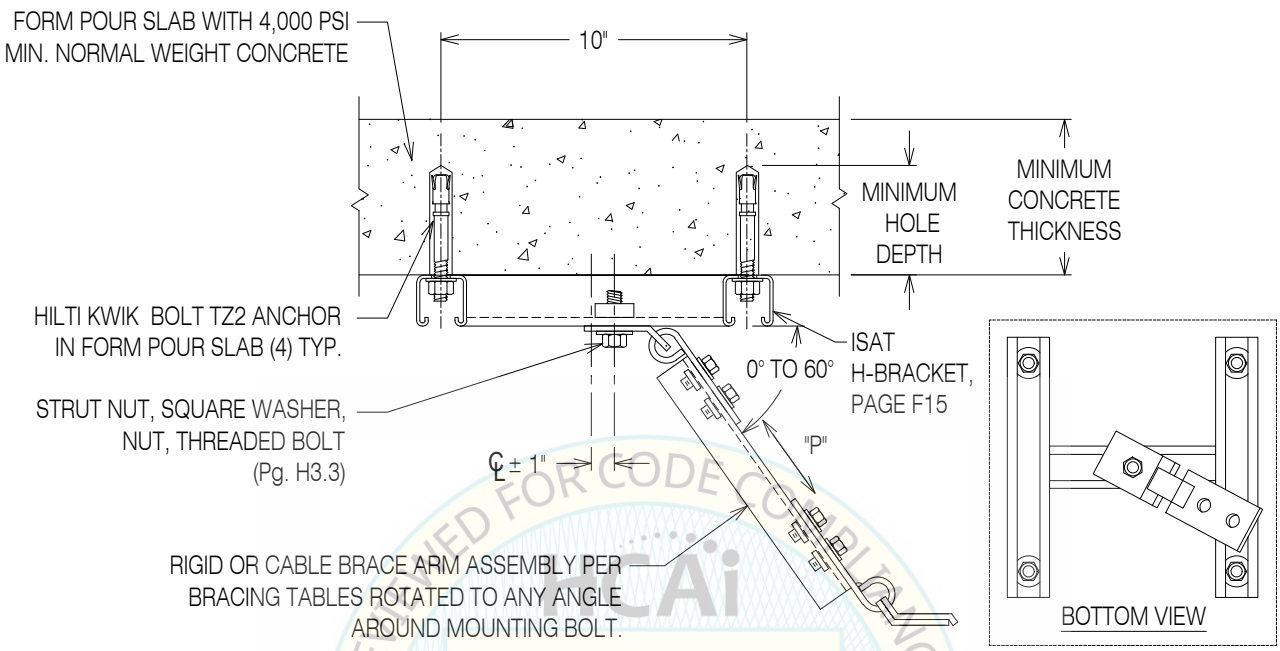

REVIEWED FOR CODE COMPLIANCE
OPM-0403
BY: William Staehlin
DATE: 01/26/2024
CALIFORNIA BUILDING CODE, 2022

Hilti Kwik Bolt TZ2 (Carbon Steel) Concrete Expansion Anchor, Minimum 4000 psi NWC
Seismically Qualified For Anchorage In Cracked Concrete
Seismic Design Categories D, E, and F
ICC Report No. ESR-4266 (Dated May 2023), Table 4

Brace Anchorage Designation	Anchor Diameter Inch	Maximum Brace Load (P) Lbs.	Minimum Hole Depth Inch	Minimum Effective Embed. [1] Inch	Minimum Concrete Thickness Inch	Installation Torque Ft-Lbs.	Minimum Edge Distance Inch	Mounting Bolt Diameter Inch
4TZ21222F	1/2	1,675	4	3 1/4	6	50	7 1/2	1/2

1. MINIMUM EFFECTIVE EMBEDMENT IS AFTER THE ANCHOR HAS BEEN SET.
2. LOAD VALUES SHOWN ARE ALLOWABLE STRESS DESIGN (ASD). CAPACITIES DERIVED IN CONFORMANCE WITH ASCE 7-16 AND ACI 318. Ωo=2.0
3. MAX BRACE LOAD "P" MAY BE LIMITED BY CAPACITY OF BRACE ATTACHMENT.

4-ANCHOR HILTI KWIK BOLT TZ2
H-BRACKET ATTACHMENT TO FORM POUR SLAB

REGISTERED PROFESSIONAL ENGINEER MARCIN WASAZNIK S-6612 STRUCTURAL STATE OF CALIFORNIA

ISAT
A Division of Tomarco Contractor Specialties
International Seismic Application Technology
14848 Northam Street, La Mirada, CA 90638
877-999-4728 (Toll Free) 714-523-0845 (fax)
www.isatsb.com

Rev. 2
11/21/23
Page
D1.4.1TZ2

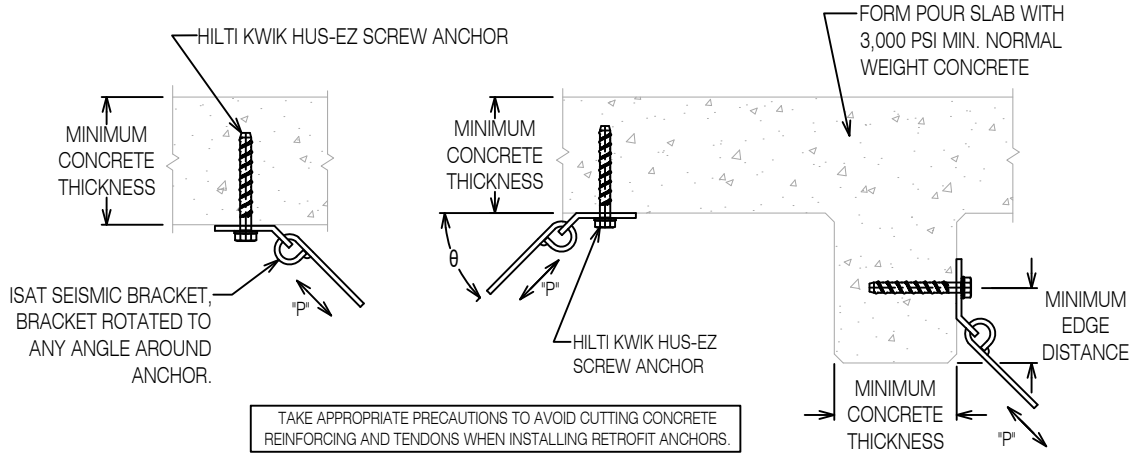

Seismically Qualified For Anchorage In Cracked Concrete
Seismic Design Categories D, E and F
Hilti Kwik HUS-EZ Screw Anchor, Minimum 3000 psi NWC
ICC Report No. ESR-3027 (Dated December 2017), Table 2, 3 and 4

Brace Anchorage Designation	Anchor Diameter Inch	Brace Angle 30°≤ θ ≤ 36° Maximum Brace Load Pmax[4] Lbs.	Brace Angle 36°< θ ≤ 60° Maximum Brace Load Pmax[4] Lbs.	Minimum Hole Depth Inch	Minimum Effective Embed.[1] Inch	Minimum Concrete Thickness Inch	Maximum Impact Wrench Torque Ft-Lbs.	Minimum Anchor Spacing [2] Inch	Edge Distance[3] Inch
1HUS147	1/4	168	141	2	1.18	3 1/4	114	6.75	2.67
1HUS388	3/8	199	178	1 7/8	1.11	3 1/4	114	6.75	2.67
1HUS1210	1/2	316	312	2 5/8	1.52	4 1/2	137	6.75	2.75
1HUS1218	1/2	1,015	995	4 5/8	3.22	6 3/4	450	9.66	5.25
1HUS5814	5/8	601	596	3 5/8	2.39	5	450	7.17	3.63
1HUS5822	5/8	1,352	1,323	5 3/8	3.88	7	450	11.64	5.82

1. MINIMUM EFFECTIVE EMBEDMENT IS AFTER THE ANCHOR HAS BEEN SET.
2. ANCHOR SPACING IS THE CENTER-TO-CENTER DISTANCE BETWEEN TWO ANCHORS.
3. AT CONCRETE CORNERS USE THE TABULATED VALUE FOR "EDGE DISTANCE FOR PMAX" FOR ONE EDGE WHERE THE "MIN. EDGE DISTANCE" IS USED FOR THE PERPENDICULAR CONCRETE FACE.
4. LOAD VALUES SHOWN ARE ALLOWABLE STRESS DESIGN (ASD). CAPACITIES DERIVED IN CONFORMANCE WITH ASCE 7-10, PIN 62 & ACI 318-11, Appendix D. Ωo=2.0

SINGLE HILTI KWIK HUS-EZ SCREW ANCHOR FOR SEISMIC BRACE CONNECTION IN FORM POUR SLAB

REGISTERED PROFESSIONAL ENGINEER MARCIN WASAZNIK S 6612 STRUCTURAL STATE OF CALIFORNIA

ISAT
A Division of Tomarco Contractor Specialties
International Seismic Application Technology
14848 Northam Street, La Mirada, CA 90638
877-999-4728 (Toll Free) 714-523-0845 (fax)
www.isatsb.com

Rev. 7
06/15/18

Page
D1.1HUS3

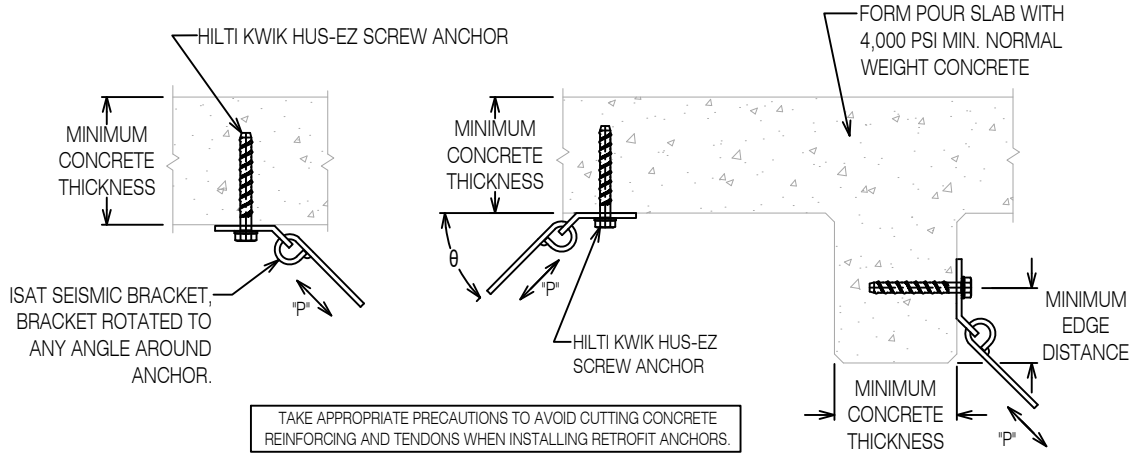

TAKE APPROPRIATE PRECAUTIONS TO AVOID CUTTING CONCRETE REINFORCING AND TENDONS WHEN INSTALLING RETROFIT ANCHORS.

Seismically Qualified For Anchorage In Cracked Concrete
Seismic Design Categories D, E and F
Hilti Kwik HUS-EZ Screw Anchor, Minimum 4000 psi NWC
ICC Report No. ESR-3027 (Dated December 2017), Table 2, 3 and 4

Brace Anchorage Designation	Anchor Diameter Inch	Brace Angle 30°≤ θ ≤ 36° Maximum Brace Load Pmax[4] Lbs.	Brace Angle 36°< θ ≤ 60° Maximum Brace Load Pmax[4] Lbs.	Minimum Hole Depth Inch	Minimum Effective Embed.[1] Inch	Minimum Concrete Thickness Inch	Maximum Impact Wrench Torque Ft-Lbs.	Minimum Anchor Spacing [2] Inch	Edge Distance[3] Inch
1HUS147	1/4	187	160	2	1.18	3 1/4	114	6.75	2.67
1HUS388	3/8	230	205	1 7/8	1.11	3 1/4	114	6.75	2.67
1HUS1210	1/2	365	360	2 5/8	1.52	4 1/2	137	6.75	2.75
1HUS1218	1/2	1,172	1,149	4 5/8	3.22	6 3/4	450	9.66	5.25
1HUS5814	5/8	694	688	3 5/8	2.39	5	450	7.17	3.63
1HUS5822	5/8	1,482	1,463	5 3/8	3.88	7	450	11.64	5.82

1. MINIMUM EFFECTIVE EMBEDMENT IS AFTER THE ANCHOR HAS BEEN SET.
2. ANCHOR SPACING IS THE CENTER-TO-CENTER DISTANCE BETWEEN TWO ANCHORS.
3. AT CONCRETE CORNERS USE THE TABULATED VALUE FOR "EDGE DISTANCE FOR PMAX" FOR ONE EDGE WHERE THE "MIN. EDGE DISTANCE" IS USED FOR THE PERPENDICULAR CONCRETE FACE.
4. LOAD VALUES SHOWN ARE ALLOWABLE STRESS DESIGN (ASD). CAPACITIES DERIVED IN CONFORMANCE WITH ASCE 7-10, PIN 62 & ACI 318-11, Appendix D. Ωo=2.0

ICC-ES FOR CODE COMPLIANCE
OPM-0403
Reviewed by William Staehlin
DATE: 01-26-2024
ICC-ES PROGRAM MANAGER, 2022

SINGLE HILTI KWIK HUS-EZ SCREW ANCHOR FOR SEISMIC BRACE CONNECTION IN FORM POUR SLAB

REGISTERED PROFESSIONAL ENGINEER MARCIN WASAZNIK S 6612 STRUCTURAL STATE OF CALIFORNIA

ISAT
A Division of Tomarco Contractor Specialties

International Seismic Application Technology
14848 Northam Street, La Mirada, CA 90638
877-999-4728 (Toll Free) 714-523-0845 (fax)
www.isatsb.com

Rev. 7
06/15/18

Page
D1.1HUS4

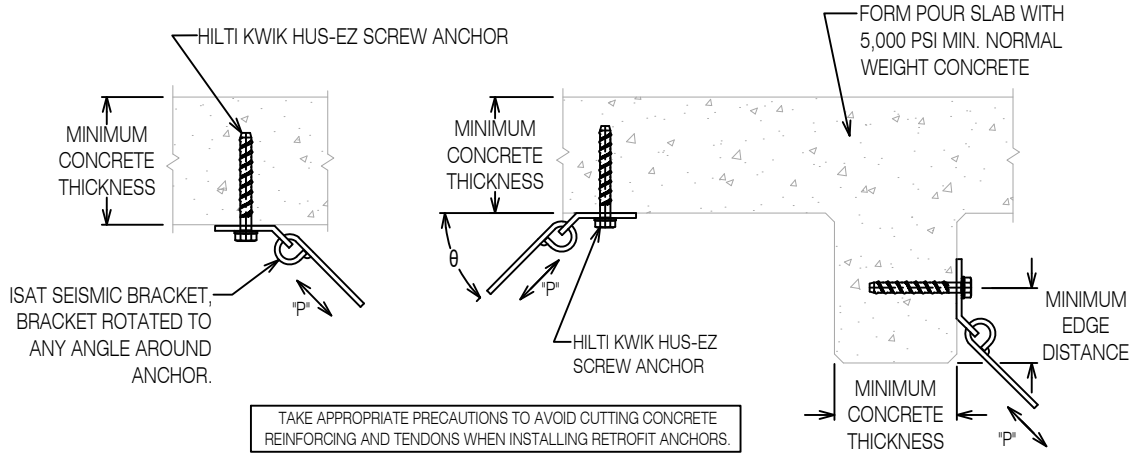

Seismically Qualified For Anchorage In Cracked Concrete
Seismic Design Categories D, E and F
Hilti Kwik HUS-EZ Screw Anchor, Minimum 5000 psi NWC
ICC Report No. ESR-3027 (Dated December 2017), Table 2, 3 and 4

Brace Anchorage Designation	Anchor Diameter Inch	Brace Angle 30°≤ θ ≤ 36° Maximum Brace Load Pmax[4] Lbs.	Brace Angle 36°< θ ≤ 60° Maximum Brace Load Pmax[4] Lbs.	Minimum Hole Depth Inch	Minimum Effective Embed.[1] Inch	Minimum Concrete Thickness Inch	Maximum Impact Wrench Torque Ft-Lbs.	Minimum Anchor Spacing [2] Inch	Edge Distance[3] Inch
1HUS147	1/4	201	175	2	1.18	3 1/4	114	6.75	2.67
1HUS388	3/8	257	230	1 7/8	1.11	3 1/4	114	6.75	2.67
1HUS1210	1/2	408	403	2 5/8	1.52	4 1/2	137	6.75	2.75
1HUS1218	1/2	1,234	1,221	4 5/8	3.22	6 3/4	450	9.66	5.25
1HUS5814	5/8	776	769	3 5/8	2.39	5	450	7.17	3.63
1HUS5822	5/8	1,552	1,543	5 3/8	3.88	7	450	11.64	5.82

1. MINIMUM EFFECTIVE EMBEDMENT IS AFTER THE ANCHOR HAS BEEN SET.
2. ANCHOR SPACING IS THE CENTER-TO-CENTER DISTANCE BETWEEN TWO ANCHORS.
3. AT CONCRETE CORNERS USE THE TABULATED VALUE FOR "EDGE DISTANCE FOR PMAX" FOR ONE EDGE WHERE THE "MIN. EDGE DISTANCE" IS USED FOR THE PERPENDICULAR CONCRETE FACE.
4. LOAD VALUES SHOWN ARE ALLOWABLE STRESS DESIGN (ASD). CAPACITIES DERIVED IN CONFORMANCE WITH ASCE 7-10, PIN 62 & ACI 318-11, Appendix D. Ωo=2.0

SINGLE HILTI KWIK HUS-EZ SCREW ANCHOR FOR SEISMIC BRACE CONNECTION IN FORM POUR SLAB

REGISTERED PROFESSIONAL ENGINEER MARCIN WASAZNIK S 6612 STRUCTURAL STATE OF CALIFORNIA

ISAT
A Division of Tomarco Contractor Specialties

International Seismic Application Technology
14848 Northam Street, La Mirada, CA 90638
877-999-4728 (Toll Free) 714-523-0845 (fax)
www.isatsb.com

Rev. 7
06/15/18

Page
D1.1HUS5

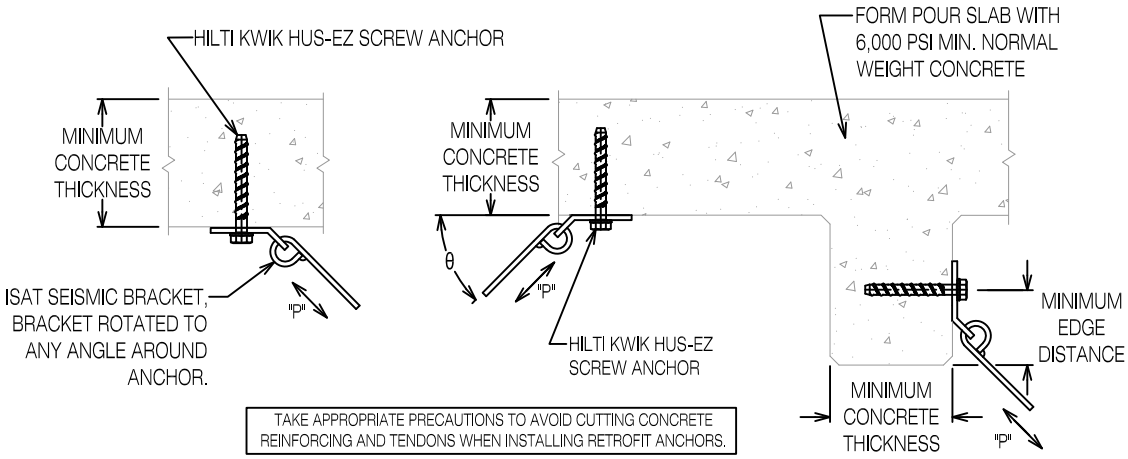

Seismically Qualified For Anchorage In Cracked Concrete
Seismic Design Categories D, E and F
Hilti Kwik HUS-EZ Screw Anchor, Minimum 6000 psi NWC
ICC Report No. ESR-3027 (Dated December 2017), Table 2, 3 and 4

Brace Anchorage Designation	Anchor Diameter Inch	Brace Angle		Minimum Hole Depth Inch	Minimum Effective Embed. [1] Inch	Minimum Concrete Thickness Inch	Maximum Impact Wrench Torque Ft-Lbs.	Minimum Anchor Spacing [2] Inch	Edge Distance [3] Inch
		30°≤ θ ≤ 36° Maximum Brace Load Pmax [4] Lbs.	36°< θ ≤ 60° Maximum Brace Load Pmax [4] Lbs.						
1HUS147	1/4	212	188	2	1.18	3 1/4	114	6.75	2.67
1HUS388	3/8	282	251	1 7/8	1.11	3 1/4	114	6.75	2.67
1HUS1210	1/2	447	441	2 5/8	1.52	4 1/2	137	6.75	2.75
1HUS1218	1/2	1,280	1,274	4 5/8	3.22	6 3/4	450	9.66	5.25
1HUS5814	5/8	850	843	3 5/8	2.39	5	450	7.17	3.63
1HUS5822	5/8	1,607	1,604	5 3/8	3.88	7	450	11.64	5.82

1. MINIMUM EFFECTIVE EMBEDMENT IS AFTER THE ANCHOR HAS BEEN SET.
2. ANCHOR SPACING IS THE CENTER-TO-CENTER DISTANCE BETWEEN TWO ANCHORS.
3. AT CONCRETE CORNERS USE THE TABULATED VALUE FOR "EDGE DISTANCE FOR PMAX" FOR ONE EDGE WHERE THE "MIN. EDGE DISTANCE" IS USED FOR THE PERPENDICULAR CONCRETE FACE.
4. LOAD VALUES SHOWN ARE ALLOWABLE STRESS DESIGN (ASD). CAPACITIES DERIVED IN CONFORMANCE WITH ASCE 7-10, PIN 62 & ACI 318-11, Appendix D. Ω_o=2.0

SINGLE HILTI KWIK HUS-EZ SCREW ANCHOR FOR SEISMIC BRACE CONNECTION IN FORM POUR SLAB

REGISTERED PROFESSIONAL ENGINEER MARCIN WASAZNIK S 6612 STRUCTURAL STATE OF CALIFORNIA

ISAT
A Division of Tomarco Contractor Specialties
International Seismic Application Technology
14848 Northam Street, La Mirada, CA 90638
877-999-4728 (Toll Free) 714-523-0845 (fax)
www.isatsb.com

Rev. 8
11/02/18

Page
D1.1HUS6

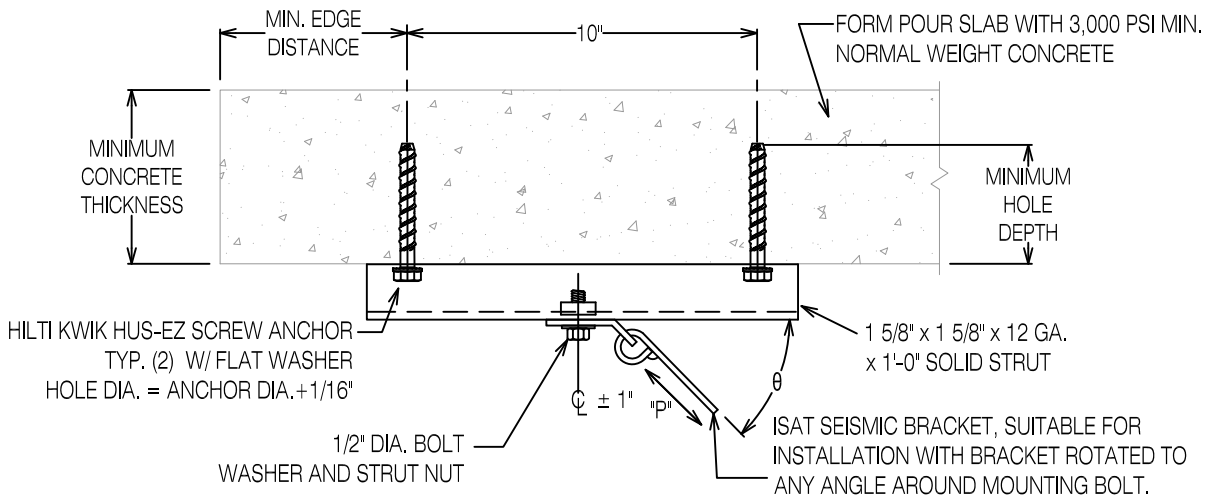

TAKE APPROPRIATE PRECAUTIONS TO AVOID CUTTING CONCRETE REINFORCING AND TENDONS WHEN INSTALLING RETROFIT ANCHORS.

REVIEWED FOR CODE COMPLIANCE
HCAi
OPM-0403
DATE: 01-26-2024
CALIFORNIA BUILDING CODE

Seismically Qualified For Anchorage In Cracked Concrete
Seismic Design Categories D, E and F
Hilti Kwik HUS-EZ Screw Anchor, Minimum 3000 psi NWC
ICC Report No. ESR-3027 (Dated December 2017), Table 2, 3 and 4

Brace Anchorage Designation	Anchor Diameter Inch	Brace Angle 30° ≤ θ ≤ 36° Maximum Brace Load (P) Lbs.	Brace Angle 36° < θ ≤ 60° Maximum Brace Load (P) Lbs.	Minimum Hole Depth Inch	Minimum Effective Embed. [1] Inch	Minimum Concrete Thickness Inch	Maximum Impact Wrench Torque Ft-Lbs.	Min. [2] Anchor Spacing Inch	Minimum Edge Distance Inch
2HUS147S	1/4	280	235	2	1.18	3 1/4	114	6.75	2.67
2HUS388S	3/8	332	296	1 7/8	1.11	3 1/4	114	6.75	2.67
2HUS1210S	1/2	527	520	2 5/8	1.52	4 1/2	137	6.75	2.75
2HUS1218S	1/2	1,315	1,315	4 5/8	3.22	6 3/4	450	9.66	5.25
2HUS5822S	5/8	1,936	1,936	5 3/8	3.88	7	450	11.64	5.82

1. MINIMUM EFFECTIVE EMBEDMENT IS AFTER THE ANCHOR HAS BEEN SET.
2. ANCHOR SPACING IS THE CENTER-TO-CENTER DISTANCE BETWEEN ADJACENT ANCHORS.
3. LOAD VALUES SHOWN ARE ALLOWABLE STRESS DESIGN (ASD). CAPACITIES DERIVED IN CONFORMANCE WITH ASCE 7-10, PIN 62 & ACI 318-11, Appendix D. Ω_o=2.0

DUAL ANCHOR HILTI KWIK HUS-EZ SCREW ANCHOR SEISMIC BRACE CONNECTION IN FORM POUR SLAB

REGISTERED PROFESSIONAL ENGINEER MARCIN WASAZNIK S 6612 STRUCTURAL STATE OF CALIFORNIA

ISAT
A Division of Tomarco Contractor Specialties
International Seismic Application Technology
14848 Northam Street, La Mirada, CA 90638
877-999-4728 (Toll Free) 714-523-0845 (fax)
www.isatsb.com

Rev. 8
11/02/18
Page
D1.2HUS3

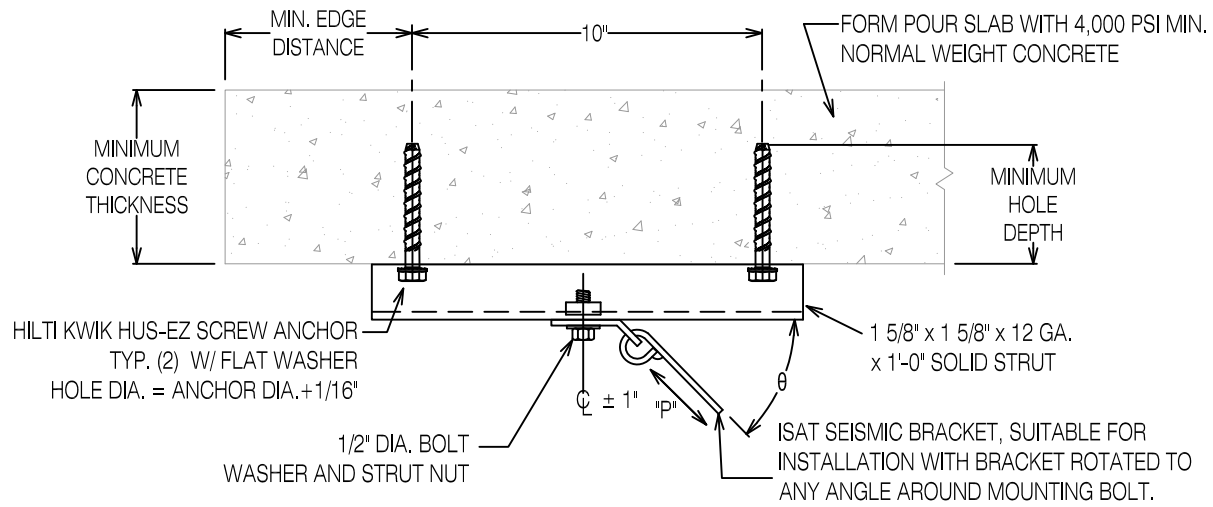

TAKE APPROPRIATE PRECAUTIONS TO AVOID CUTTING CONCRETE REINFORCING AND TENDONS WHEN INSTALLING RETROFIT ANCHORS.

REVIEWED FOR CODE COMPLIANCE
HCAi
OPM-0403
DATE 01-26-2024
CALIFORNIA BUILDING CODE 2022

Seismically Qualified For Anchorage In Cracked Concrete
Seismic Design Categories D, E and F
Hilti Kwik HUS-EZ Screw Anchor, Minimum 4000 psi NWC
ICC Report No. ESR-3027 (Dated December 2017), Table 2, 3 and 4

Brace Anchorage Designation	Anchor Diameter Inch	Brace Angle		Minimum Hole Depth Inch	Minimum Effective Embed. [1] Inch	Minimum Concrete Thickness Inch	Maximum Impact Wrench Torque Ft-Lbs.	Min. [2] Anchor Spacing Inch	Minimum Edge Distance Inch
		30° ≤ θ ≤ 36° Maximum Brace Load (P) Lbs.	36° < θ ≤ 60° Maximum Brace Load (P) Lbs.						
2HUS147S	1/4	312	266	2	1.18	3 1/4	114	6.75	2.67
2HUS388S	3/8	384	342	1 7/8	1.11	3 1/4	114	6.75	2.67
2HUS1210S	1/2	609	600	2 5/8	1.52	4 1/2	137	6.75	2.75
2HUS1218S	1/2	1,315	1,315	4 5/8	3.22	6 3/4	450	9.66	5.25
2HUS5822S	5/8	1,936	1,936	5 3/8	3.88	7	450	11.64	5.82

1. MINIMUM EFFECTIVE EMBEDMENT IS AFTER THE ANCHOR HAS BEEN SET.
2. ANCHOR SPACING IS THE CENTER-TO-CENTER DISTANCE BETWEEN ADJACENT ANCHORS.
3. LOAD VALUES SHOWN ARE ALLOWABLE STRESS DESIGN (ASD). CAPACITIES DERIVED IN CONFORMANCE WITH ASCE 7-10, PIN 62 & ACI 318-11, Appendix D. Ω_o=2.0

DUAL ANCHOR HILTI KWIK HUS-EZ SCREW ANCHOR SEISMIC BRACE CONNECTION IN FORM POUR SLAB

REGISTERED PROFESSIONAL ENGINEER MARCIN WASAZNIK S 6612 STRUCTURAL STATE OF CALIFORNIA

ISAT
A Division of Tomarco Contractor Specialties
International Seismic Application Technology
14848 Northam Street, La Mirada, CA 90638
877-999-4728 (Toll Free) 714-523-0845 (fax)
www.isatsb.com

Rev. 8
11/02/18
Page
D1.2HUS4

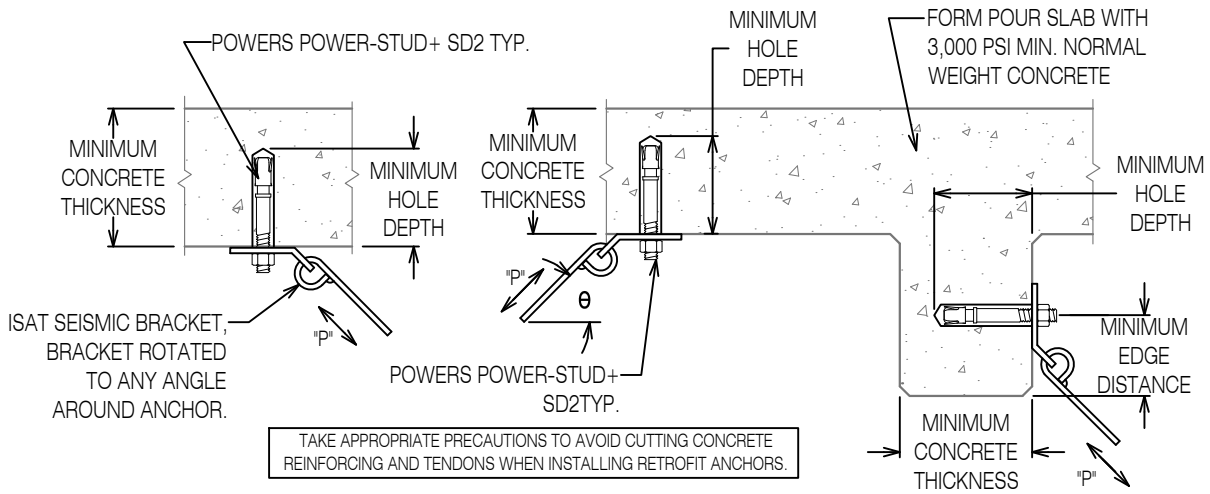

TAKE APPROPRIATE PRECAUTIONS TO AVOID CUTTING CONCRETE REINFORCING AND TENDONS WHEN INSTALLING RETROFIT ANCHORS.

REVIEWED FOR CODE COMPLIANCE
HCAi
DATE: 01-26-2024
INTERNATIONAL CODES

Seismically Qualified For Anchorage In Cracked Concrete
Seismic Design Categories D, E and F
Powers Power-Stud+ SD2 Concrete Expansion Anchor, Minimum 3000 psi NWC
ICC Report No. ESR-2502 (Dated May 2017), Table 1, Table 3 and Table 4

Brace Anchorage Designation	Anchor Diameter Inch	Brace Angle 30°≤ θ ≤ 36° Maximum Brace Load Pmax[4] Lbs.	Brace Angle 36°< θ ≤ 60° Maximum Brace Load Pmax[4] Lbs.	Minimum Hole Depth Inch	Minimum Effective Embed.[1] Inch	Minimum Concrete Thickness Inch	Installation Torque Ft-Lbs.	Edge[3] Distance for Pmax Inch	Min.[2] Anchor Spacing Inch	Min. Edge Dist. Inch	Brace Load (P) at Min. Edge Distance[4] Lbs.
1SD23812	3/8	499	472	2 5/8	2	4	20	4 1/2	6	2 1/2	324
1SD21215	1/2	574	542	2 3/4	2	4 1/2	40	4 1/2	6	4	544
1SD21218	1/2	1,008	963	4	3 1/4	5 3/4	40	6	9 3/4	4	732
1SD25819	5/8	1,184	1,120	4 1/4	3 1/4	5 3/4	60	6	9 3/4	4 1/4	876
1SD25824	5/8	1,551	1,517	5 1/4	4 1/4	6 1/2	60	8 3/4	12 3/4	4 1/4	975

1. MINIMUM EFFECTIVE EMBEDMENT IS AFTER THE ANCHOR HAS BEEN SET.
2. ANCHOR SPACING IS THE CENTER-TO-CENTER DISTANCE BETWEEN TWO ANCHORS.
3. AT CONCRETE CORNERS USE THE TABULATED VALUE FOR "EDGE DISTANCE FOR PMAX" FOR ONE EDGE WHERE THE "MIN. EDGE DISTANCE" IS USED FOR THE PERPENDICULAR CONCRETE FACE.
4. LOAD VALUES SHOWN ARE ALLOWABLE STRESS DESIGN (ASD). CAPACITIES DERIVED IN CONFORMANCE WITH ASCE 7-10, PIN 62 & ACI 318-11, Appendix D. Ωo=2.0

SINGLE ANCHOR POWERS POWER-STUD+ SD2 FOR SEISMIC BRACE CONNECTION IN FORM POUR SLAB

ISAT
A Division of Tomarco Contractor Specialties
International Seismic Application Technology
14848 Northam Street, La Mirada, CA 90638
877-999-4728 (Toll Free) 714-523-0845 (fax)
www.isatsb.com

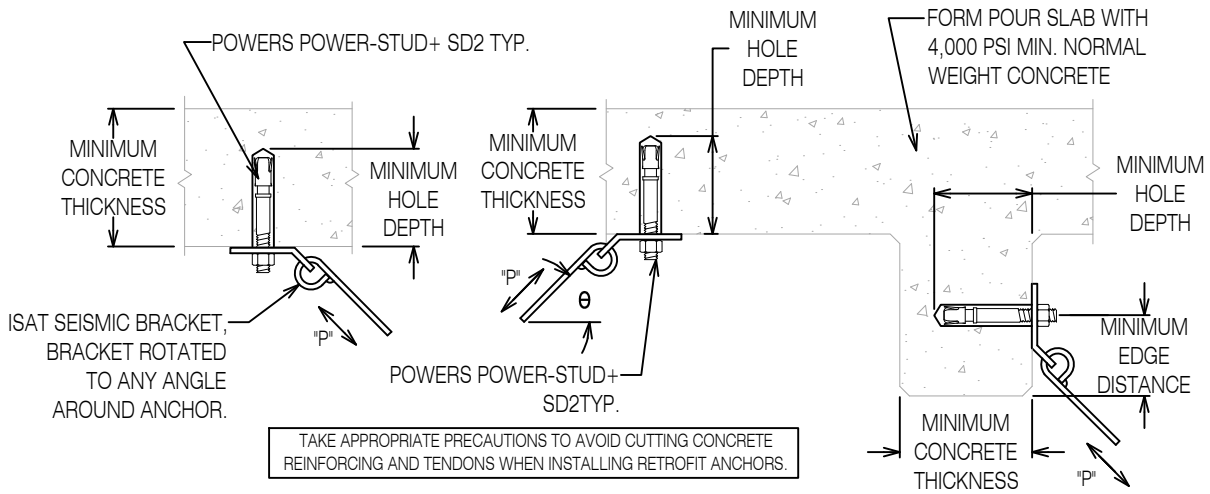

TAKE APPROPRIATE PRECAUTIONS TO AVOID CUTTING CONCRETE REINFORCING AND TENDONS WHEN INSTALLING RETROFIT ANCHORS.

REVIEWED FOR CODE COMPLIANCE BY: William Staehlin DATE: 01-26-2024 CALIFORNIA BUILDING CODE

Seismically Qualified For Anchorage In Cracked Concrete
Seismic Design Categories D, E and F
Powers Power-Stud+ SD2 Concrete Expansion Anchor, Minimum 4000 psi NWC
ICC Report No. ESR-2502 (Dated May 2017), Table 1, Table 3 and Table 4

Brace Anchorage Designation	Anchor Diameter Inch	Brace Angle 30°≤ θ ≤ 36° Maximum Brace Load Pmax[4] Lbs.	Brace Angle 36°< θ ≤ 60° Maximum Brace Load Pmax[4] Lbs.	Minimum Hole Depth Inch	Minimum Effective Embed.[1] Inch	Minimum Concrete Thickness Inch	Installation Torque Ft-Lbs.	Edge[3] Distance for Pmax Inch	Min.[2] Anchor Spacing Inch	Min. Edge Dist. Inch	Brace Load (P) at Min. Edge Distance[4] Lbs.
1SD23812	3/8	524	503	2 5/8	2	4	20	4 1/2	6	2 1/2	375
1SD21215	1/2	662	626	2 3/4	2	4 1/2	40	4 1/2	6	4	628
1SD21218	1/2	1,080	1,051	4	3 1/4	5 3/4	40	6	9 3/4	4	845
1SD25819	5/8	1,367	1,293	4 1/4	3 1/4	5 3/4	60	6	9 3/4	4 1/4	1012
1SD25824	5/8	1,649	1,634	5 1/4	4 1/4	6 1/2	60	8 3/4	12 3/4	4 1/4	1125

1. MINIMUM EFFECTIVE EMBEDMENT IS AFTER THE ANCHOR HAS BEEN SET.
2. ANCHOR SPACING IS THE CENTER-TO-CENTER DISTANCE BETWEEN TWO ANCHORS.
3. AT CONCRETE CORNERS USE THE TABULATED VALUE FOR "EDGE DISTANCE FOR PMAX" FOR ONE EDGE WHERE THE "MIN. EDGE DISTANCE" IS USED FOR THE PERPENDICULAR CONCRETE FACE.
4. LOAD VALUES SHOWN ARE ALLOWABLE STRESS DESIGN (ASD). CAPACITIES DERIVED IN CONFORMANCE WITH ASCE 7-10, PIN 62 & ACI 318-11, Appendix D. Ωo=2.0

SINGLE ANCHOR POWERS POWER-STUD+ SD2 FOR SEISMIC BRACE CONNECTION IN FORM POUR SLAB

REGISTERED PROFESSIONAL ENGINEER MARCIN WASAZNIK S 6612 STRUCTURAL STATE OF CALIFORNIA

ISAT
A Division of Tomarco Contractor Specialties

International Seismic Application Technology
14848 Northam Street, La Mirada, CA 90638
877-999-4728 (Toll Free) 714-523-0845 (fax)
www.isatsb.com

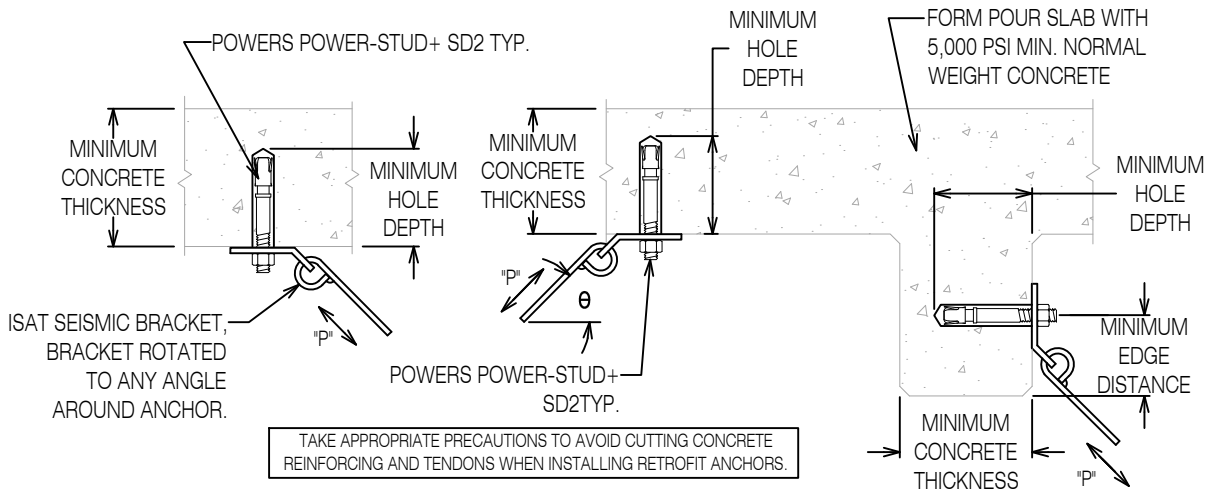

TAKE APPROPRIATE PRECAUTIONS TO AVOID CUTTING CONCRETE REINFORCING AND TENDONS WHEN INSTALLING RETROFIT ANCHORS.

REVIEWED FOR CODE COMPLIANCE BY William Staehlin DATE: 01-26-2024 CALIFORNIA BUILDING CODE 2022

Seismically Qualified For Anchorage In Cracked Concrete
Seismic Design Categories D, E and F
Powers Power-Stud+ SD2 Concrete Expansion Anchor, Minimum 5000 psi NWC
ICC Report No. ESR-2502 (Dated May 2017), Table 1, Table 3 and Table 4

Brace Anchorage Designation	Anchor Diameter Inch	Brace Angle 30° ≤ θ ≤ 36° Maximum Brace Load Pmax[4] Lbs.	Brace Angle 36° < θ ≤ 60° Maximum Brace Load Pmax[4] Lbs.	Minimum Hole Depth Inch	Minimum Effective Embed.[1] Inch	Minimum Concrete Thickness Inch	Installation Torque Ft-Lbs.	Edge[3] Distance for Pmax Inch	Min.[2] Anchor Spacing Inch	Min. Edge Dist. Inch	Brace Load (P) at Min. Edge Distance[4] Lbs.
1SD23812	3/8	543	526	2 5/8	2	4	20	4 1/2	6	2 1/2	419
1SD21215	1/2	740	700	2 3/4	2	4 1/2	40	4 1/2	6	4	702
1SD21218	1/2	1,134	1,117	4	3 1/4	5 3/4	40	6	9 3/4	4	944
1SD25819	5/8	1,449	1,392	4 1/4	3 1/4	5 3/4	60	6	9 3/4	4 1/4	1131
1SD25824	5/8	1,724	1,718	5 1/4	4 1/4	6 1/2	60	8 3/4	12 3/4	4 1/4	1258

1. MINIMUM EFFECTIVE EMBEDMENT IS AFTER THE ANCHOR HAS BEEN SET.
2. ANCHOR SPACING IS THE CENTER-TO-CENTER DISTANCE BETWEEN TWO ANCHORS.
3. AT CONCRETE CORNERS USE THE TABULATED VALUE FOR "EDGE DISTANCE FOR PMAX" FOR ONE EDGE WHERE THE "MIN. EDGE DISTANCE" IS USED FOR THE PERPENDICULAR CONCRETE FACE.
4. LOAD VALUES SHOWN ARE ALLOWABLE STRESS DESIGN (ASD). CAPACITIES DERIVED IN CONFORMANCE WITH ASCE 7-10, PIN 62 & ACI 318-11, Appendix D. Ωo=2.0

SINGLE ANCHOR POWERS POWER-STUD+ SD2 FOR SEISMIC BRACE CONNECTION IN FORM POUR SLAB

REGISTERED PROFESSIONAL ENGINEER MARCIN WASAZNIK S 6612 STRUCTURAL STATE OF CALIFORNIA

ISAT
A Division of Tomarco Contractor Specialties
International Seismic Application Technology
14848 Northam Street, La Mirada, CA 90638
877-999-4728 (Toll Free) 714-523-0845 (fax)
www.isatsb.com

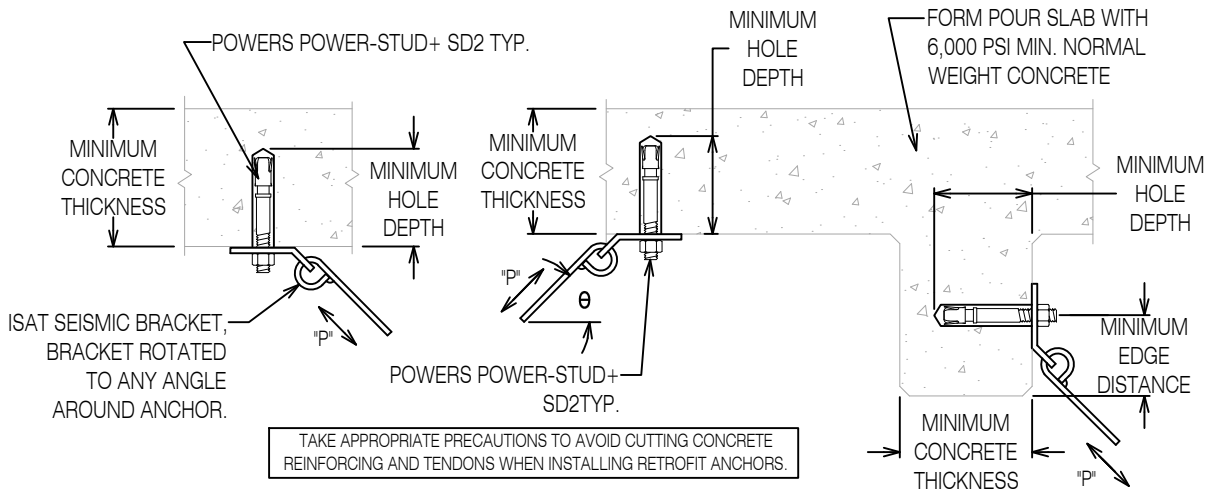

Seismically Qualified For Anchorage In Cracked Concrete
Seismic Design Categories D, E and F
Powers Power-Stud+ SD2 Concrete Expansion Anchor, Minimum 6000 psi NWC
ICC Report No. ESR-2502 (Dated May 2017), Table 1, Table 3 and Table 4

Brace Anchorage Designation	Anchor Diameter Inch	Brace Angle 30°≤ θ ≤ 36° Maximum Brace Load Pmax[4] Lbs.	Brace Angle 36°< θ ≤ 60° Maximum Brace Load Pmax[4] Lbs.	Minimum Hole Depth Inch	Minimum Effective Embed.[1] Inch	Minimum Concrete Thickness Inch	Installation Torque Ft-Lbs.	Edge[3] Distance for Pmax Inch	Min.[2] Anchor Spacing Inch	Min. Edge Dist. Inch	Brace Load (P) at Min. Edge Distance[4] Lbs.
1SD23812	3/8	558	545	2 5/8	2	4	20	4 1/2	6	2 1/2	459
1SD21215	1/2	811	767	2 3/4	2	4 1/2	40	4 1/2	6	4	769
1SD21218	1/2	1,179	1,169	4	3 1/4	5 3/4	40	6	9 3/4	4	1035
1SD25819	5/8	1,512	1,470	4 1/4	3 1/4	5 3/4	60	6	9 3/4	4 1/4	1239
1SD25824	5/8	1,784	1,782	5 1/4	4 1/4	6 1/2	60	8 3/4	12 3/4	4 1/4	1378

1. MINIMUM EFFECTIVE EMBEDMENT IS AFTER THE ANCHOR HAS BEEN SET.
2. ANCHOR SPACING IS THE CENTER-TO-CENTER DISTANCE BETWEEN TWO ANCHORS.
3. AT CONCRETE CORNERS USE THE TABULATED VALUE FOR "EDGE DISTANCE FOR PMAX" FOR ONE EDGE WHERE THE "MIN. EDGE DISTANCE" IS USED FOR THE PERPENDICULAR CONCRETE FACE.
4. LOAD VALUES SHOWN ARE ALLOWABLE STRESS DESIGN (ASD). CAPACITIES DERIVED IN CONFORMANCE WITH ASCE 7-10, PIN 62 & ACI 318-11, Appendix D. Ωo=2.0

SINGLE ANCHOR POWERS POWER-STUD+ SD2 FOR SEISMIC BRACE CONNECTION IN FORM POUR SLAB

REVIEWED FOR CODE COMPLIANCE
HCAi
DATE: 01-26-2024
CALIFORNIA BUILDING CODE, 2022

REGISTERED PROFESSIONAL ENGINEER
MARCIN WASAZNIK
S 6612
STRUCTURAL
STATE OF CALIFORNIA

ISAT
A Division of Tomarco Contractor Specialties

International Seismic Application Technology
14848 Northam Street, La Mirada, CA 90638
877-999-4728 (Toll Free) 714-523-0845 (fax)
www.isatsb.com

Rev. 7
06/15/18

Page
D1.1SD26

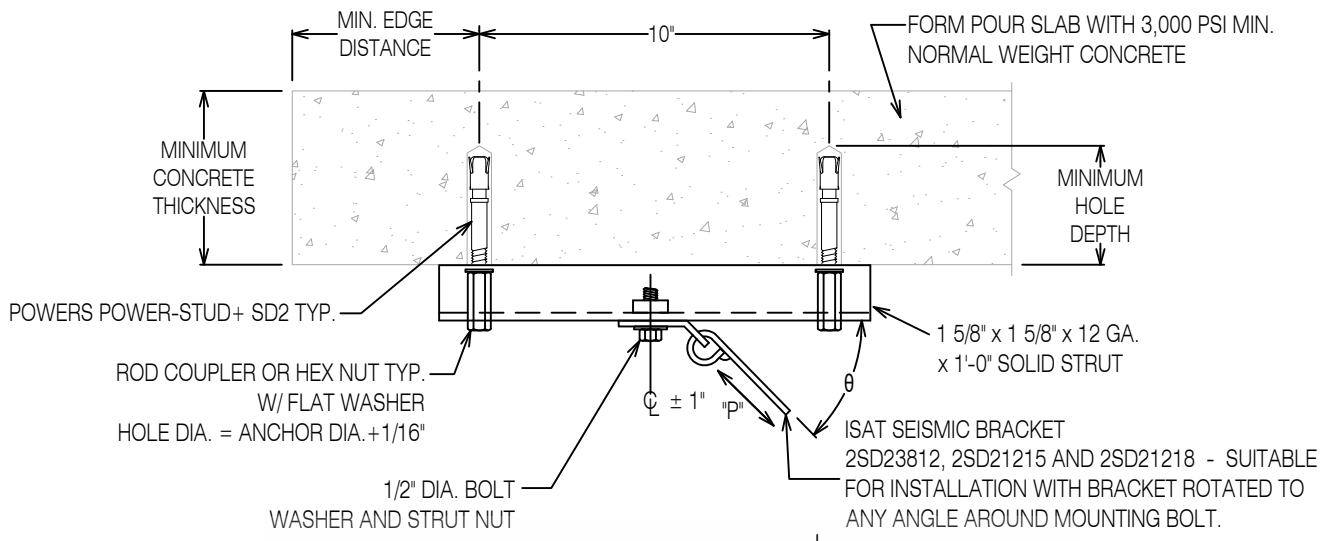

TAKE APPROPRIATE PRECAUTIONS TO AVOID CUTTING CONCRETE REINFORCING AND TENDONS WHEN INSTALLING RETROFIT ANCHORS.

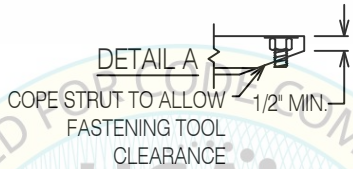

2SD25819 - INSTALL BRACE ARM PARALLEL TO CHANNEL LENGTH AS SHOWN. FOR P> 1,935 LBS, USE 3-BOLT BRACKET CONNECTOR, PAGE D2.7

REVIEWED FOR CODE COMPLIANCE
HCAi
OPM-0403
DATE 01-26-2024
FLORIDA BUILDING CODE 2

Seismically Qualified For Anchorage In Cracked Concrete
Seismic Design Categories D, E and F
Powers Power-Stud+ SD2 Concrete Expansion Anchor, Minimum 3000 psi NWC
ICC Report No. ESR-2502 (Dated May 2017), Table 1, Table 3 and Table 4

Brace Anchorage Designation	Anchor Diameter Inch	Brace Angle 30° ≤ θ ≤ 36° Maximum Brace Load (P) Lbs.	Brace Angle 36° < θ ≤ 60° Maximum Brace Load (P) Lbs.	Minimum Hole Depth Inch	Minimum Effective Embed. [1] Inch	Minimum Concrete Thickness Inch	Installation Torque Ft-Lbs.	Minimum Edge Distance Inch
2SD23812S	3/8	832	790	2 5/8	2	4	20	4 1/2
2SD21215S	1/2	956	906	2 3/4	2	4 1/2	40	4 1/2
2SD21218S	1/2	1,315	1,315	4	3 1/4	5 3/4	40	6
2SD25819S	5/8 [4]	1,936	1,936	4 1/4	3 1/4	5 3/4	60	6

1. MINIMUM EFFECTIVE DEPTH IS AFTER THE ANCHOR HAS BEEN SET.
2. MINIMUM SPACING TO AN ADJACENT ANCHOR IS TWO TIMES THE TABULATED EDGE DISTANCE.
3. LOAD VALUES SHOWN ARE ALLOWABLE STRESS DESIGN (ASD). CAPACITIES DERIVED IN CONFORMANCE WITH ASCE 7-10, PIN 62 & ACI 318-11, Appendix D. Ωo=2.0
4. USE DETAIL A.

DUAL ANCHOR POWERS POWER-STUD+ SD2 WITH STRUT SEISMIC BRACE CONNECTION IN FORM POUR SLAB

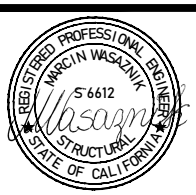

ISAT
A Division of Tomarco Contractor Specialties
International Seismic Application Technology
14848 Northam Street, La Mirada, CA 90638
877-999-4728 (Toll Free) 714-523-0845 (fax)
www.isatsb.com

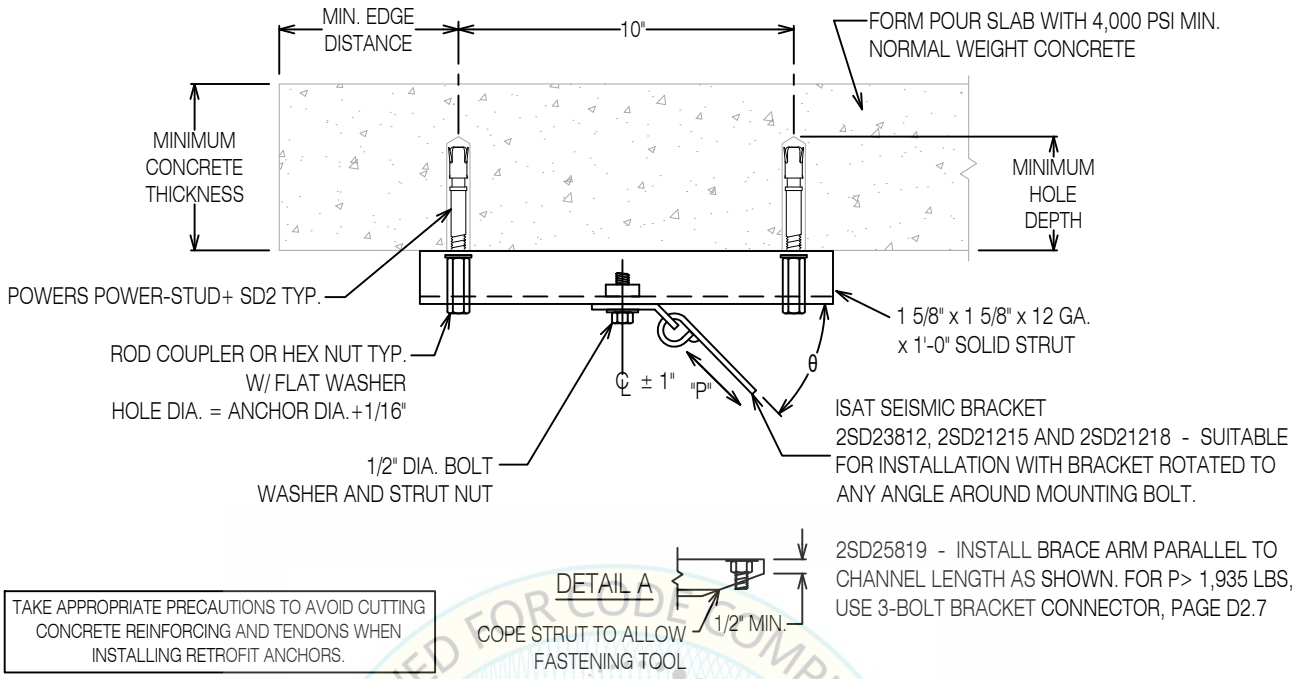

TAKE APPROPRIATE PRECAUTIONS TO AVOID CUTTING CONCRETE REINFORCING AND TENDONS WHEN INSTALLING RETROFIT ANCHORS.

REVIEWED FOR CODE COMPLIANCE
HCAi
OPM-0403
DATE: 01-26-2024
CALIFORNIA BUILDING CODE, 2022

Seismically Qualified For Anchorage In Cracked Concrete
Seismic Design Categories D, E and F
Powers Power-Stud+ SD2 Concrete Expansion Anchor, Minimum 4000 psi NWC
ICC Report No. ESR-2502 (Dated May 2017), Table 1, Table 3 and Table 4

Brace Anchorage Designation	Anchor Diameter Inch	Brace Angle 30° ≤ θ ≤ 36° Maximum Brace Load (P) Lbs.	Brace Angle 36° < θ ≤ 60° Maximum Brace Load (P) Lbs.	Minimum Hole Depth Inch	Minimum Effective Embed. [1] Inch	Minimum Concrete Thickness Inch	Installation Torque Ft-Lbs.	Minimum Edge Distance Inch
2SD23812S	3/8	873	844	2 5/8	2	4	20	4 1/2
2SD21215S	1/2	1,104	1,047	2 3/4	2	4 1/2	40	4 1/2
2SD21218S	1/2	1,315	1,315	4	3 1/4	5 3/4	40	6
2SD25819S	5/8 [4]	1,936	1,936	4 1/4	3 1/4	5 3/4	60	6

1. MINIMUM EFFECTIVE DEPTH IS AFTER THE ANCHOR HAS BEEN SET.
2. MINIMUM SPACING TO AN ADJACENT ANCHOR IS TWO TIMES THE TABULATED EDGE DISTANCE.
3. LOAD VALUES SHOWN ARE ALLOWABLE STRESS DESIGN (ASD). CAPACITIES DERIVED IN CONFORMANCE WITH ASCE 7-10, PIN 62 & ACI 318-11, Appendix D. Ωo=2.0
4. USE DETAIL A.

DUAL ANCHOR POWERS POWER-STUD+ SD2 WITH STRUT SEISMIC BRACE CONNECTION IN FORM POUR SLAB

REGISTERED PROFESSIONAL ENGINEER MARCIN WASAZNIK S 6612 STRUCTURAL STATE OF CALIFORNIA

ISAT
A Division of Tomarco Contractor Specialties
International Seismic Application Technology
14848 Northam Street, La Mirada, CA 90638
877-999-4728 (Toll Free) 714-523-0845 (fax)
www.isatsb.com

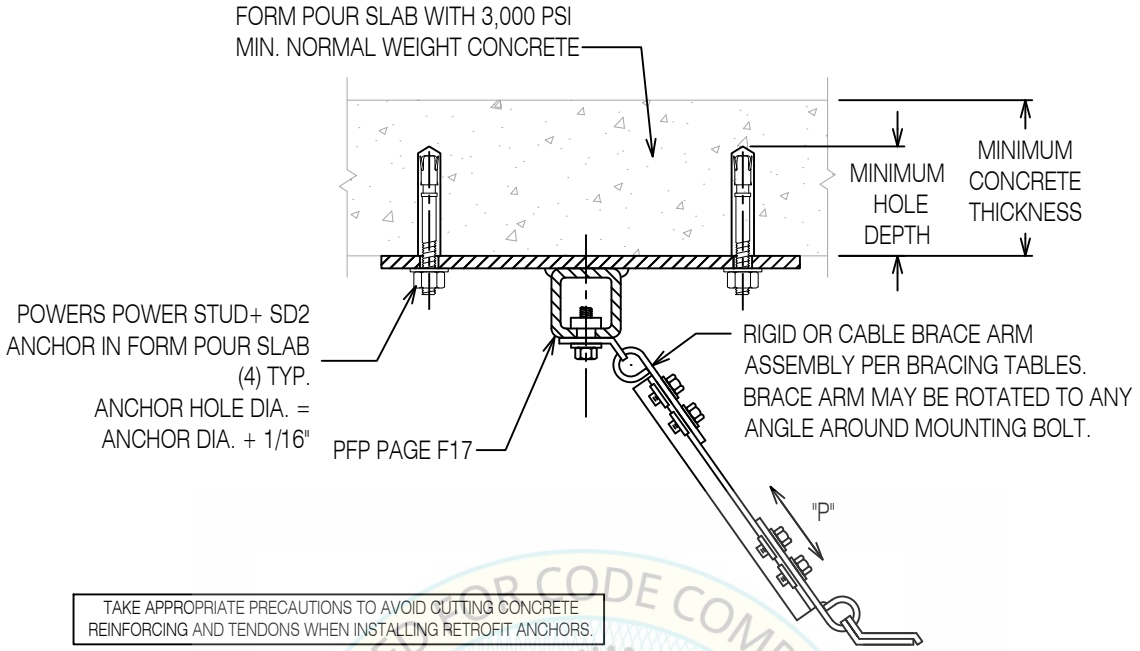

TAKE APPROPRIATE PRECAUTIONS TO AVOID CUTTING CONCRETE REINFORCING AND TENDONS WHEN INSTALLING RETROFIT ANCHORS.

REVIEWED FOR CODE COMPLIANCE BY HCAi OPM-0403 DATE: 01-26-2024 OPM-0403 REVIEWED CODE

Seismically Qualified For Anchorage In Cracked Concrete
Seismic Design Categories D, E and F
Powers Power-Stud+ SD2 Concrete Expansion Anchor, Minimum 3000 psi NWC
ICC Report No. ESR-2502 (Dated May 2017), Table 1, Table 3 and Table 4

Brace Anchorage Designation	Anchor Diameter Inch	Maximum Brace Load (P) Lbs.	Minimum Hole Depth Inch	Minimum Effective Embed. [1] Inch	Minimum Concrete Thickness Inch	Installation Torque Ft-Lbs.	Minimum Edge Distance Inch	Plate Number Page F17	Mounting Bolt Diameter Inch
4SD23812P	3/8	1,325	2 5/8	2	4	20	4 1/2	D134	1/2
4SD21218P	1/2	2,681	4	3 1/4	5 3/4	40	6	D145	5/8
4SD25824P	5/8	4,238	5 1/4	4 1/4	6 1/2	60	8 3/4	D155	5/8

1. MINIMUM EFFECTIVE EMBEDMENT IS AFTER THE ANCHOR HAS BEEN SET.
2. LOAD VALUES SHOWN ARE ALLOWABLE STRESS DESIGN (ASD). CAPACITIES DERIVED IN CONFORMANCE WITH ASCE 7-10, PIN 62 & ACI 318-11, Appendix D. Ωo=2.0

4-ANCHOR POWERS POWER-STUD +SD2
PLATE IN FORM POUR SLAB (PFP)

REGISTERED PROFESSIONAL ENGINEER MARCIN WASAZNIK S 6612 STRUCTURAL STATE OF CALIFORNIA

ISAT
A Division of Tomarco Contractor Specialties
International Seismic Application Technology
14848 Northam Street, La Mirada, CA 90638
877-999-4728 (Toll Free) 714-523-0845 (fax)
www.isatsb.com

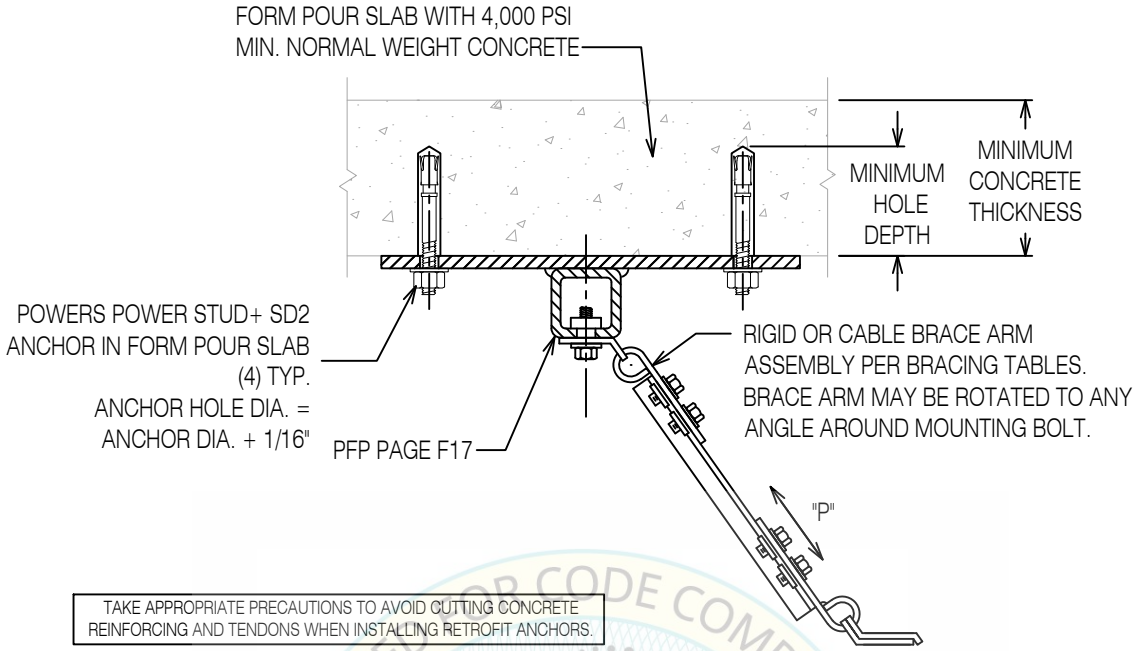

TAKE APPROPRIATE PRECAUTIONS TO AVOID CUTTING CONCRETE REINFORCING AND TENDONS WHEN INSTALLING RETROFIT ANCHORS.

REVIEWED FOR CODE COMPLIANCE
HCAi
OPM-0403
BY: William Staehlin
DATE: 01/26/2024
CALIFORNIA BUILDING CODE, 2022

Seismically Qualified For Anchorage In Cracked Concrete
Seismic Design Categories D, E and F
Powers Power-Stud+ SD2 Concrete Expansion Anchor, Minimum 4000 psi NWC
ICC Report No. ESR-2502 (Dated May 2017), Table 1, Table 3 and Table 4

Brace Anchorage Designation	Anchor Diameter Inch	Maximum Brace Load (P) Lbs.	Minimum Hole Depth Inch	Minimum Effective Embed.[1] Inch	Minimum Concrete Thickness Inch	Installation Torque Ft-Lbs.	Minimum Edge Distance Inch	Plate Number Page F17	Mounting Bolt Diameter Inch
4SD23812P	3/8	1,418	2 5/8	2	4	20	4 1/2	D134	1/2
4SD21218P	1/2	2,961	4	3 1/4	5 3/4	40	6	D145	5/8
4SD25824P	5/8	4,238	5 1/4	4 1/4	6 1/2	60	8 3/4	D155	5/8

1. MINIMUM EFFECTIVE EMBEDMENT IS AFTER THE ANCHOR HAS BEEN SET.
2. LOAD VALUES SHOWN ARE ALLOWABLE STRESS DESIGN (ASD). CAPACITIES DERIVED IN CONFORMANCE WITH ASCE 7-10, PIN 62 & ACI 318-11, Appendix D. Ωo=2.0

4-ANCHOR POWERS POWER-STUD +SD2
PLATE IN FORM POUR SLAB (PFP)

REGISTERED PROFESSIONAL ENGINEER
MARCIN WASAZNIK
S 6612
STRUCTURAL
STATE OF CALIFORNIA

ISAT
A Division of Tomarco Contractor Specialties
International Seismic Application Technology
14848 Northam Street, La Mirada, CA 90638
877-999-4728 (Toll Free) 714-523-0845 (fax)
www.isatsb.com

Rev. 7
06/15/18

Page
D1.4SD24

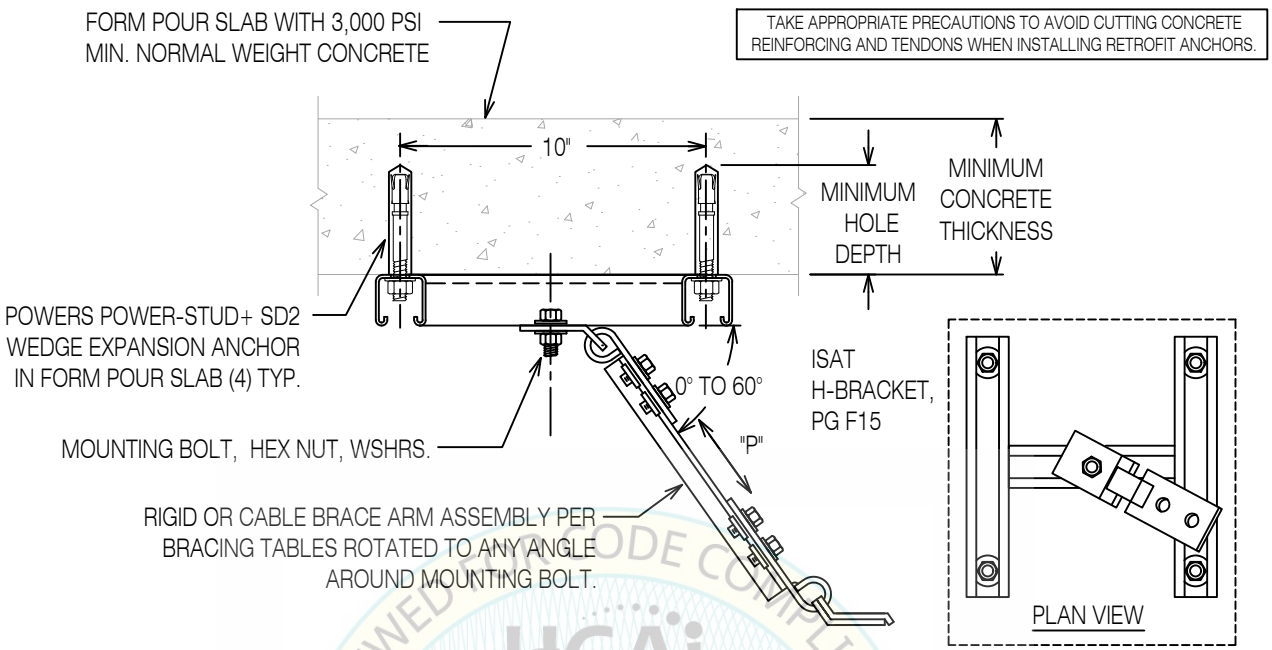

HCAi
OPM-0403
BY: William Staehlin
REVIEWED FOR CODE COMPLIANCE
CALIFORNIA BUILDING CODE

Seismically Qualified For Anchorage In Cracked Concrete
Seismic Design Categories D, E and F
Powers Power-Stud+ SD2 Concrete Expansion Anchor, Minimum 3000 psi NWC
ICC Report No. ESR-2502 (Dated May 2017), Table 1, Table 3 and Table 4

Brace Anchorage Designation	Anchor Diameter Inch	Maximum Brace Load (P) Lbs.	Minimum Hole Depth Inch	Minimum Effective Embed. [1] Inch	Minimum Concrete Thickness Inch	Installation Torque Ft-Lbs.	Minimum Edge Distance Inch	Mounting Bolt Diameter Inch
4SD21218F	1/2	1,846	4	3 1/4	6	40	7 1/2	5/8

1. MINIMUM EFFECTIVE EMBEDMENT IS AFTER THE ANCHOR HAS BEEN SET.
2. LOAD VALUES SHOWN ARE ALLOWABLE STRESS DESIGN (ASD). CAPACITIES DERIVED IN CONFORMANCE WITH ASCE 7-10, PIN 62 & ACI 318-11, Appendix D. Ωo=2.0

4-ANCHOR POWERS POWER-STUD+ SD 2 H-BRACKET ATTACHMENT TO FORM POUR SLAB

REGISTERED PROFESSIONAL ENGINEER MARCIN WASAZNIK S 6612 STRUCTURAL STATE OF CALIFORNIA

ISAT
A Division of Tomarco Contractor Specialties
International Seismic Application Technology
14848 Northam Street, La Mirada, CA 90638
877-999-4728 (Toll Free) 714-523-0845 (fax)
www.isatsb.com

Rev. 7
06/15/18
Page
D1.4.1SD2

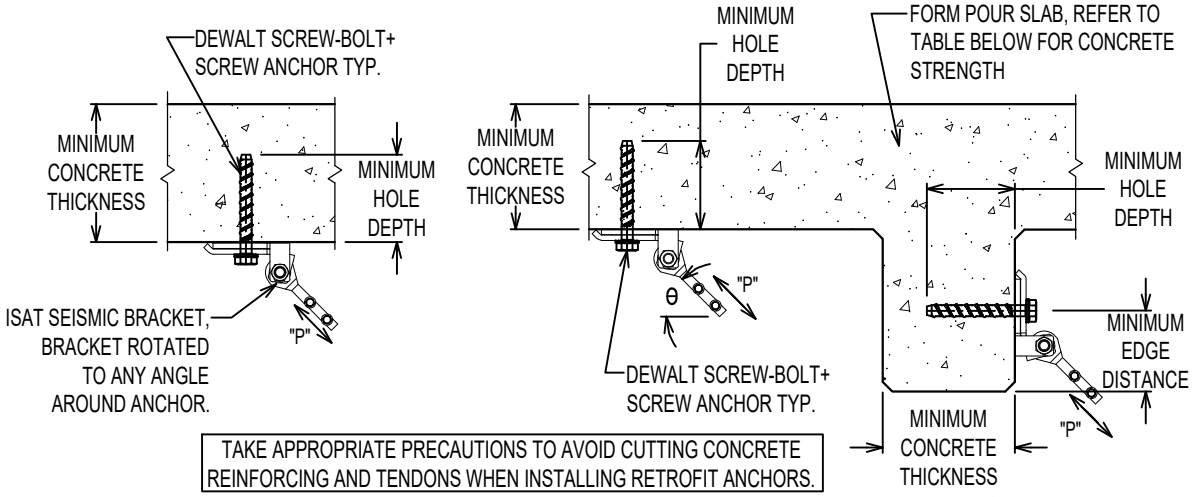

TAKE APPROPRIATE PRECAUTIONS TO AVOID CUTTING CONCRETE REINFORCING AND TENDONS WHEN INSTALLING RETROFIT ANCHORS.

Dewalt Screw-Bolt+ Anchor, Minimum 3000 psi NWC
Seismically Qualified For Anchorage In Cracked Concrete
Seismic Design Categories C, D, E and F
ICC Report No. ESR-3889 (Dated November 2022), Table 1A, 2, 3A, 3B

Brace Anchorage Designation	Anchor Diameter (in)	Brace Angle		Minimum Hole Depth (in)	Minimum Effective Embed.[1] (in)	Minimum Concrete Thickness (in)	Maximum Impact Wrench Torque (ft-lbs)	Minimum Anchor Spacing[2] (in)	Edge Distance[3] (in)
		30°≤ θ ≤ 36° Maximum Brace Load Pmax[4] (lbs)	36°< θ ≤ 60° Maximum Brace Load Pmax[4] (lbs)						
1DSB1411	1/4	235	230	2 7/8	1.94	4	150	6.75	3.00
1DSB3810	3/8	223	208	2 3/8	1.33	3 1/2	300	6.75	3.00
1DSB3816	3/8	334	338	3 5/8	2.39	5	300	7.17	3.00
1DSB1220	1/2	842	839	4 5/8	3.23	6 3/4	300	9.69	5.25
1DSB5816	5/8	423	408	3 5/8	2.24	5	700	6.75	3.75
1DSB5824	5/8	867	796	5 3/8	3.73	7	700	11.19	6.00

REVIEWED FOR CODE COMPLIANCE
OPM-0403
BY: William Staehlin
DATE: 01-26-2024
CALIFORNIA BUILDING CODE 2022

1. MINIMUM EFFECTIVE EMBEDMENT IS AFTER THE ANCHOR HAS BEEN SET.
2. ANCHOR SPACING IS THE CENTER-TO-CENTER DISTANCE BETWEEN TWO ANCHORS.
3. AT CONCRETE CORNERS USE THE TABULATED VALUE FOR "EDGE DISTANCE FOR PMAX" FOR ONE EDGE WHERE THE "MIN. EDGE DISTANCE" IS USED FOR THE PERPENDICULAR CONCRETE FACE.
4. LOAD VALUES SHOWN ARE ALLOWABLE STRESS DESIGN (ASD). CAPACITIES DERIVED IN CONFORMANCE WITH ASCE 7-16, ACI 318. Ω_o=2.0

SINGLE ANCHOR DEWALT SCREW-BOLT+ SCREW ANCHOR FOR SEISMIC BRACE CONNECTION IN FORM POUR SLAB

REGISTERED PROFESSIONAL ENGINEER MARCIN WASAZNIK S-6612 STRUCTURAL STATE OF CALIFORNIA

ISAT
A Division of Tomarco Contractor Specialties
International Seismic Application Technology
14848 Northam Street, La Mirada, CA 90638
877-999-4728 (Toll Free) 714-523-0845 (fax)
www.isatsb.com

Rev. 2
11/20/23
Page
D1.1DSB3

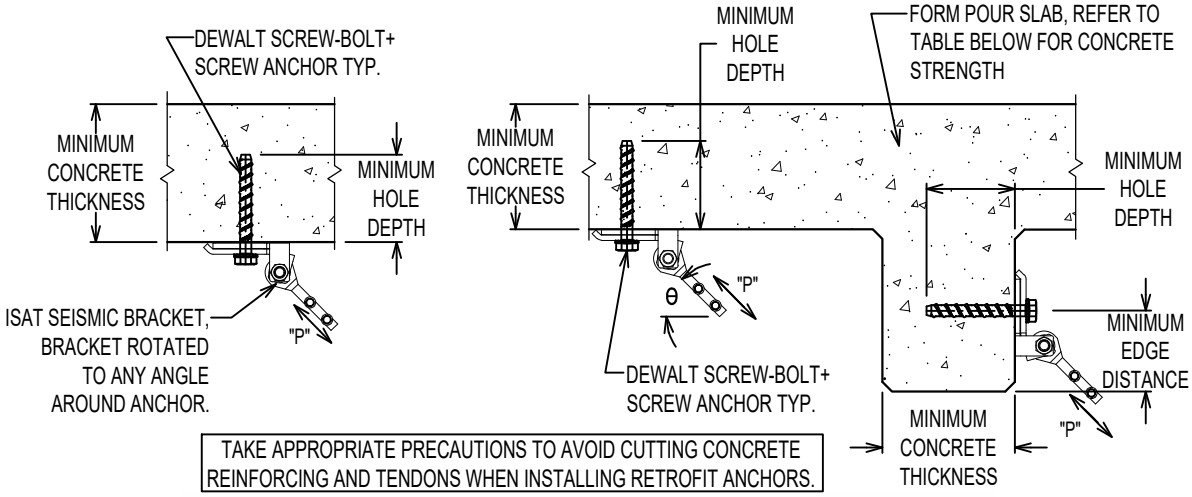

TAKE APPROPRIATE PRECAUTIONS TO AVOID CUTTING CONCRETE REINFORCING AND TENDONS WHEN INSTALLING RETROFIT ANCHORS.

Dewalt Screw-Bolt+ Screw Anchor, Minimum 4000 psi NWC
Seismically Qualified For Anchorage In Cracked Concrete
Seismic Design Categories D, E and F
ICC Report No. ESR-3889 (Dated November 2022), Table 1A, 2, 3A, 3B

Brace Anchorage Designation	Anchor Diameter (in)	Brace Angle 30°≤ θ ≤ 36° Maximum Brace Load Pmax[4] (lbs)	Brace Angle 36°< θ ≤ 60° Maximum Brace Load Pmax[4] (lbs)	Minimum Hole Depth (in)	Minimum Effective Embed.[1] (in)	Minimum Concrete Thickness (in)	Maximum Impact Wrench Torque (ft-lbs)	Minimum Anchor Spacing[2] (in)	Edge Distance[3] (in)
1DSB1411	1/4	265	257	2 7/8	1.94	4	150	6.75	3.00
1DSB3810	3/8	258	240	2 3/8	1.33	3 1/2	300	6.75	3.00
1DSB3816	3/8	386	390	3 5/8	2.39	5	300	7.17	3.00
1DSB1220	1/2	972	969	4 5/8	3.23	6 3/4	300	9.69	5.25
1DSB5816	5/8	489	472	3 5/8	2.24	5	700	6.75	3.75
1DSB5824	5/8	1,001	919	5 3/8	3.73	7	700	11.19	6.00

1. MINIMUM EFFECTIVE EMBEDMENT IS AFTER THE ANCHOR HAS BEEN SET.
2. ANCHOR SPACING IS THE CENTER-TO-CENTER DISTANCE BETWEEN TWO ANCHORS.
3. AT CONCRETE CORNERS USE THE TABULATED VALUE FOR "EDGE DISTANCE FOR PMAX" FOR ONE EDGE WHERE THE "MIN. EDGE DISTANCE" IS USED FOR THE PERPENDICULAR CONCRETE FACE.
4. LOAD VALUES SHOWN ARE ALLOWABLE STRESS DESIGN (ASD). CAPACITIES DERIVED IN CONFORMANCE WITH ASCE 7-16 & ACI 318. Ωo=2.0

REVIEWED FOR CODE COMPLIANCE
OPM-0403
By William Staehlin
DATE: 01-26-2024
CALIFORNIA BUILDING CODE 2022

SINGLE ANCHOR DEWALT SCREW-BOLT+ SCREW ANCHOR FOR SEISMIC BRACE CONNECTION IN FORM POUR SLAB

REGISTERED PROFESSIONAL ENGINEER MARCIN WASAZNIK S-6612 STRUCTURAL STATE OF CALIFORNIA

ISAT
A Division of Tomarco Contractor Specialties

International Seismic Application Technology
14848 Northam Street, La Mirada, CA 90638
877-999-4728 (Toll Free) 714-523-0845 (fax)
www.isatsb.com

Rev. 2
11/20/23

Page
D1.1DSB4

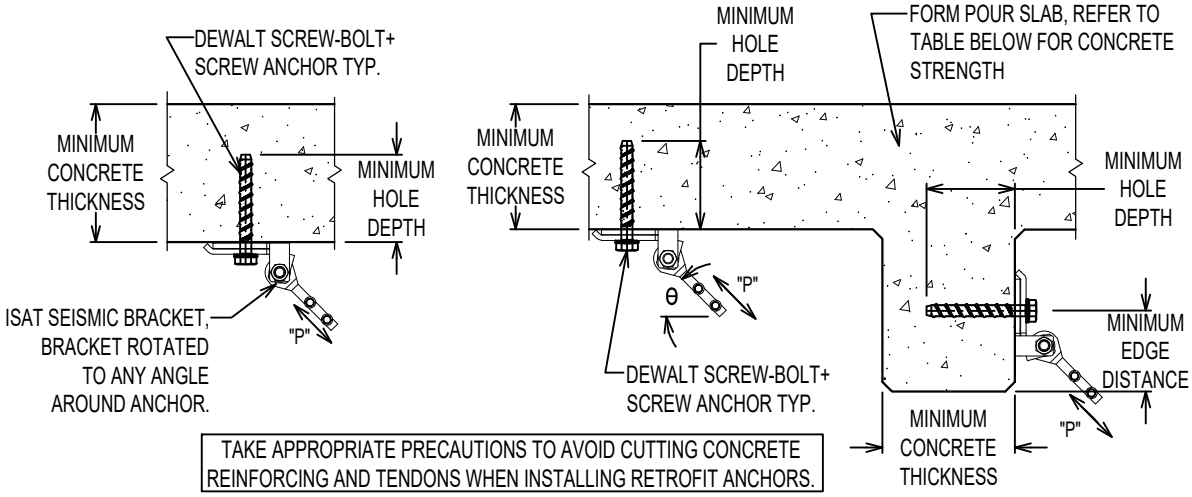

TAKE APPROPRIATE PRECAUTIONS TO AVOID CUTTING CONCRETE REINFORCING AND TENDONS WHEN INSTALLING RETROFIT ANCHORS.

Dewalt Screw-Bolt+ Screw Anchor, Minimum 5000 psi NWC
Seismically Qualified For Anchorage In Cracked Concrete
Seismic Design Categories D, E and F
ICC Report No. ESR-3889 (Dated November 2022), Table 1A, 2, 3A, 3B

Brace Anchorage Designation	Anchor Diameter (in)	Brace Angle 30°≤ θ ≤ 36° Maximum Brace Load Pmax[4] (lbs)	Brace Angle 36°< θ ≤ 60° Maximum Brace Load Pmax[4] (lbs)	Minimum Hole Depth (in)	Minimum Effective Embed.[1] (in)	Minimum Concrete Thickness (in)	Maximum Impact Wrench Torque (ft-lbs)	Minimum Anchor Spacing[2] (in)	Edge Distance[3] (in)
1DSB1411	1/4	290	280	2 7/8	1.94	4	150	6.75	3.00
1DSB3810	3/8	288	269	2 3/8	1.33	3 1/2	300	6.75	3.00
1DSB3816	3/8	432	436	3 5/8	2.39	5	300	7.17	3.00
1DSB1220	1/2	1,087	1,084	4 5/8	3.23	6 3/4	300	9.69	5.25
1DSB5816	5/8	546	527	3 5/8	2.24	5	700	6.75	3.75
1DSB5824	5/8	1,119	1,028	5 3/8	3.73	7	700	11.19	6.00

1. MINIMUM EFFECTIVE EMBEDMENT IS AFTER THE ANCHOR HAS BEEN SET.
2. ANCHOR SPACING IS THE CENTER-TO-CENTER DISTANCE BETWEEN TWO ANCHORS.
3. AT CONCRETE CORNERS USE THE TABULATED VALUE FOR "EDGE DISTANCE FOR PMAX" FOR ONE EDGE WHERE THE "MIN. EDGE DISTANCE" IS USED FOR THE PERPENDICULAR CONCRETE FACE.
4. LOAD VALUES SHOWN ARE ALLOWABLE STRESS DESIGN (ASD). CAPACITIES DERIVED IN CONFORMANCE WITH ASCE 7-16 & ACI 318. Ωo=2.0

REVIEWED FOR CODE COMPLIANCE
OPM-0403
BY: William Staehlin
DATE: 01-26-2024
CALIFORNIA BUILDING CODE 2022

SINGLE ANCHOR DEWALT SCREW-BOLT+ SCREW ANCHOR FOR SEISMIC BRACE CONNECTION IN FORM POUR SLAB

REGISTERED PROFESSIONAL ENGINEER
MARCIN WASAZNIK
S 6612
STRUCTURAL
STATE OF CALIFORNIA

ISAT
A Division of Tomarco Contractor Specialties

International Seismic Application Technology
14848 Northam Street, La Mirada, CA 90638
877-999-4728 (Toll Free) 714-523-0845 (fax)
www.isatsb.com

Rev. 2
11/20/23

Page
D1.1DSB5

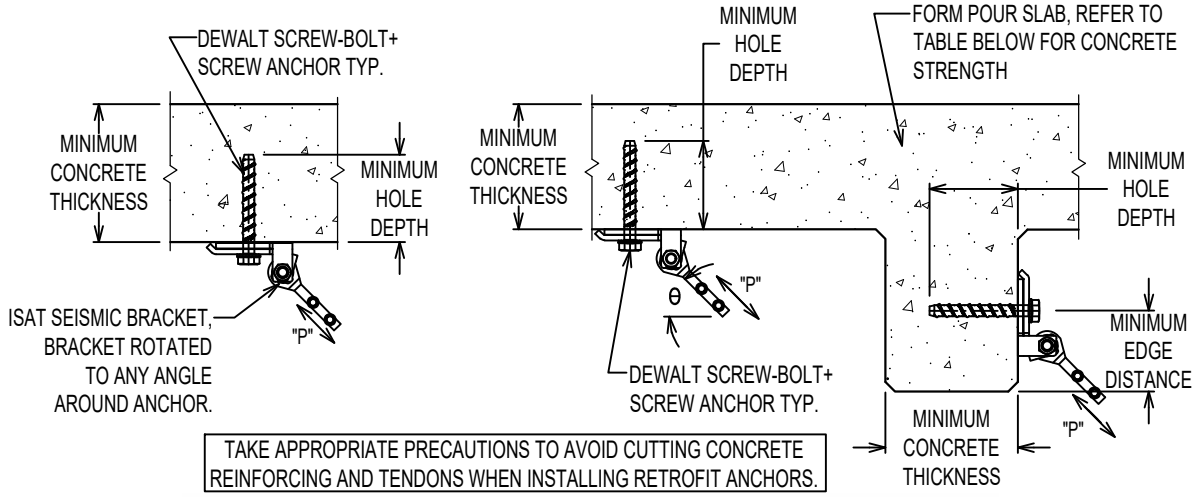

TAKE APPROPRIATE PRECAUTIONS TO AVOID CUTTING CONCRETE REINFORCING AND TENDONS WHEN INSTALLING RETROFIT ANCHORS.

Dewalt Screw-Bolt+ Screw Anchor, Minimum 6000 psi NWC
Seismically Qualified For Anchorage In Cracked Concrete
Seismic Design Categories D, E and F
ICC Report No. ESR-3889 (Dated November 2022), Table 1A, 2, 3A, 3B

Brace Anchorage Designation	Anchor Diameter (in)	Brace Angle		Minimum Hole Depth (in)	Minimum Effective Embed.[1] (in)	Minimum Concrete Thickness (in)	Maximum Impact Wrench Torque (ft-lbs)	Minimum Anchor Spacing[2] (in)	Edge Distance[3] (in)
		30°≤ θ ≤ 36° Maximum Brace Load Pmax[4] (lbs)	36°< θ ≤ 60° Maximum Brace Load Pmax[4] (lbs)						
1DSB1411	1/4	312	300	2 7/8	1.94	4	150	6.75	3.00
1DSB3810	3/8	316	294	2 3/8	1.33	3 1/2	300	6.75	3.00
1DSB3816	3/8	473	477	3 5/8	2.39	5	300	7.17	3.00
1DSB1220	1/2	1,191	1,187	4 5/8	3.23	6 3/4	300	9.69	5.25
1DSB5816	5/8	598	578	3 5/8	2.24	5	700	6.75	3.75
1DSB5824	5/8	1,226	1,126	5 3/8	3.73	7	700	11.19	6.00

1. MINIMUM EFFECTIVE EMBEDMENT IS AFTER THE ANCHOR HAS BEEN SET.
2. ANCHOR SPACING IS THE CENTER-TO-CENTER DISTANCE BETWEEN TWO ANCHORS.
3. AT CONCRETE CORNERS USE THE TABULATED VALUE FOR "EDGE DISTANCE FOR PMAX" FOR ONE EDGE WHERE THE "MIN. EDGE DISTANCE" IS USED FOR THE PERPENDICULAR CONCRETE FACE.
4. LOAD VALUES SHOWN ARE ALLOWABLE STRESS DESIGN (ASD). CAPACITIES DERIVED IN CONFORMANCE WITH ASCE 7-16 & ACI 318. Ωo=2.0

REVIEWED FOR CODE COMPLIANCE BY ICC
OPM-0403
BY: William Staehlin
DATE: 01-26-2024
CALIFORNIA BUILDING CODE 2022

SINGLE ANCHOR DEWALT SCREW-BOLT+ SCREW ANCHOR FOR SEISMIC BRACE CONNECTION IN FORM POUR SLAB

REGISTERED PROFESSIONAL ENGINEER MARCIN WASAZNIK S-6612 STRUCTURAL STATE OF CALIFORNIA

ISAT
A Division of Tomarco Contractor Specialties
International Seismic Application Technology
14848 Northam Street, La Mirada, CA 90638
877-999-4728 (Toll Free) 714-523-0845 (fax)
www.isatsb.com

Rev. 2
11/20/23
Page
D1.1DSB6

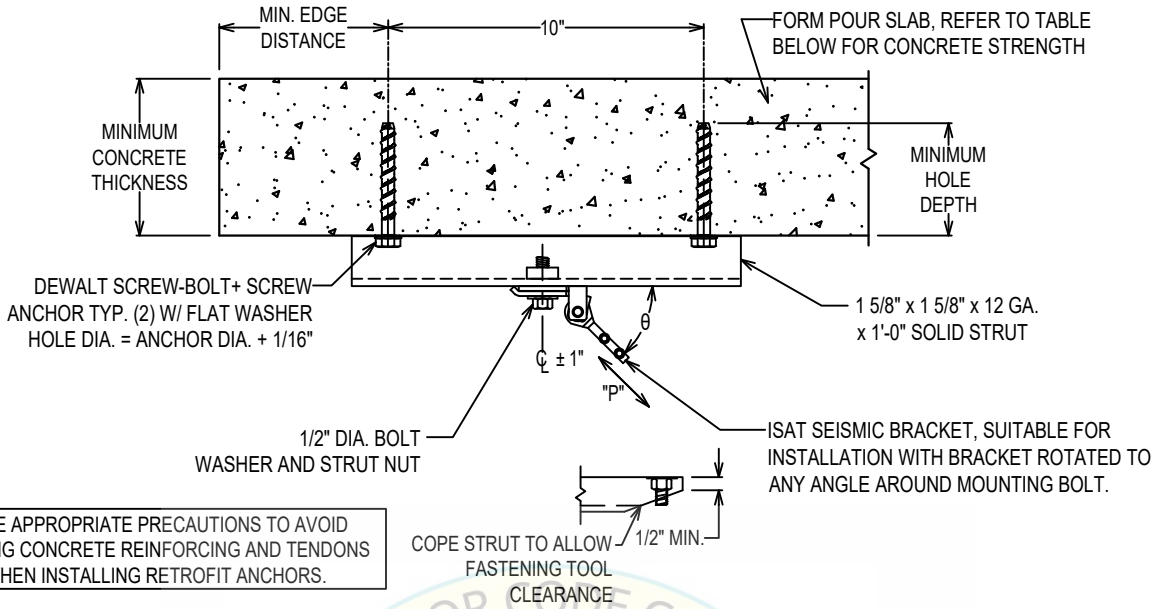

TAKE APPROPRIATE PRECAUTIONS TO AVOID CUTTING CONCRETE REINFORCING AND TENDONS WHEN INSTALLING RETROFIT ANCHORS.

DETAIL A

REVIEWED FOR CODE COMPLIANCE
HCAi
OPM-0403
BY: William Staehlin
DATE: 01-26-2024
CALIFORNIA BUILDING CODE 2022

Dewalt Screw-Bolt+ Screw Anchor, Minimum 3000 psi NWC
Seismically Qualified For Anchorage In Cracked Concrete
Seismic Design Categories C, D, E and F
ICC Report No. ESR-3889 (Dated November 2022), Table 1A, 2, 3A, 3B

Brace Anchorage Designation	Anchor Diameter (in)	Brace Angle 30°≤ θ ≤ 36° Maximum Brace Load Pmax[3] (lbs)	Brace Angle 36°< θ ≤ 60° Maximum Brace Load Pmax[3] (lbs)	Minimum Hole Depth (in)	Minimum Effective Embed.[1] (in)	Minimum Concrete Thickness (in)	Maximum Impact Wrench Torque (ft-lbs)	Minimum Anchor Spacing[2] (in)	Minimum Edge Distance (in)
2DSB1411S	1/4	392	384	2 7/8	1.94	4	150	6.75	3.00
2DSB3810S	3/8	372	347	2 3/8	1.33	3 1/2	300	6.75	3.00
2DSB3816S	3/8	557	561	3 5/8	2.39	5	300	7.17	3.00
2DSB1220S	1/2	1,177	1,177	4 5/8	3.23	6 3/4	300	9.69	5.25
2DSB5824S	5/8	1,452	1,386	5 3/8	3.73	7	700	11.19	6.00

1. MINIMUM EFFECTIVE EMBEDMENT IS AFTER THE ANCHOR HAS BEEN SET.
2. ANCHOR SPACING IS THE CENTER-TO-CENTER DISTANCE BETWEEN ADJACENT ANCHORS.
3. LOAD VALUES SHOWN ARE ALLOWABLE STRESS DESIGN (ASD). CAPACITIES DERIVED IN CONFORMANCE WITH ASCE 7-16 & ACI 318. Ωo=2.0

DUAL ANCHOR DEWALT SCREW-BOLT+ SCREW ANCHOR WITH STRUT SEISMIC BRACE CONNECTION IN FORM POUR SLAB

REGISTERED PROFESSIONAL ENGINEER MARCIN WASAZNIK S-6612 STRUCTURAL STATE OF CALIFORNIA

ISAT
A Division of Tomarco Contractor Specialties
International Seismic Application Technology
14848 Northam Street, La Mirada, CA 90638
877-999-4728 (Toll Free) 714-523-0845 (fax)
www.isatsb.com

Rev. 2
11/21/23
Page
D1.2DSB3

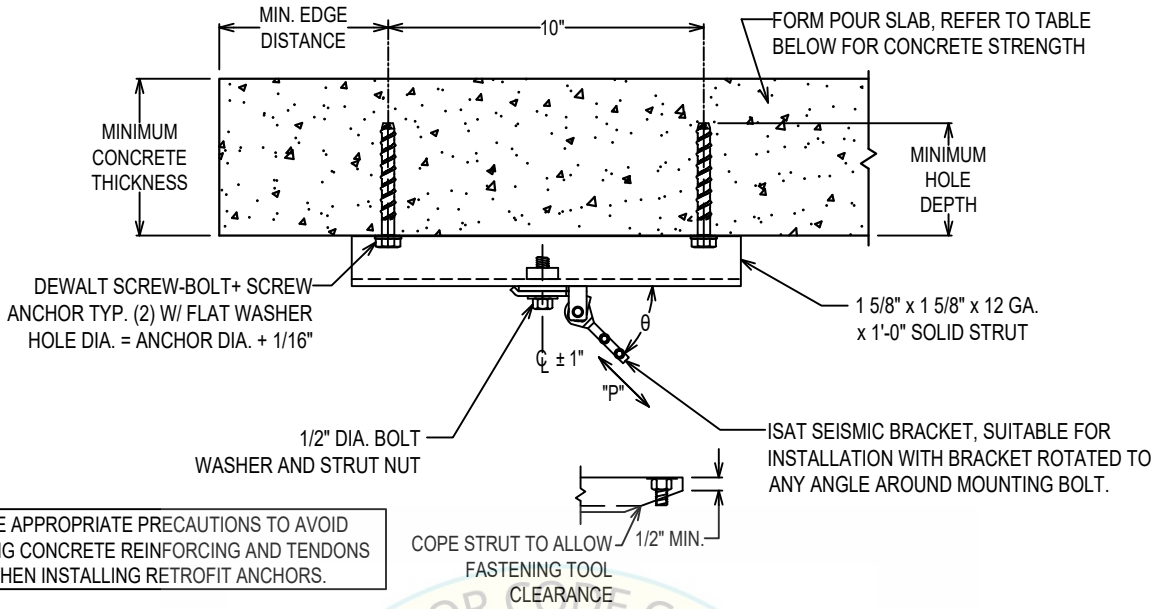

TAKE APPROPRIATE PRECAUTIONS TO AVOID CUTTING CONCRETE REINFORCING AND TENDONS WHEN INSTALLING RETROFIT ANCHORS.

DETAIL A

REVIEWED FOR CODE COMPLIANCE
HCAi
BY: William Staehlin
DATE: 01-26-2024
CALIFORNIA BUILDING CODE 2022

Dewalt Screw-Bolt+ Screw Anchor, Minimum 4000 psi NWC
Seismically Qualified For Anchorage In Cracked Concrete
Seismic Design Categories C, D, E and F
ICC Report No. ESR-3889 (Dated November 2022), Table 1A, 2, 3A, 3B

Brace Anchorage Designation	Anchor Diameter (in)	Brace Angle 30°≤ θ ≤ 36° Maximum Brace Load Pmax[3] (lbs)	Brace Angle 36°< θ ≤ 60° Maximum Brace Load Pmax[3] (lbs)	Minimum Hole Depth (in)	Minimum Effective Embed.[1] (in)	Minimum Concrete Thickness (in)	Maximum Impact Wrench Torque (ft-lbs)	Minimum Anchor Spacing[2] (in)	Minimum Edge Distance (in)
2DSB1411S	1/4	441	430	2 7/8	1.94	4	150	6.75	3.00
2DSB3810S	3/8	430	401	2 3/8	1.33	3 1/2	300	6.75	3.00
2DSB3816S	3/8	643	648	3 5/8	2.39	5	300	7.17	3.00
2DSB1220S	1/2	1,315	1,315	4 5/8	3.23	6 3/4	300	9.69	5.25
2DSB5824S	5/8	1,803	1,600	5 3/8	3.73	7	700	11.19	6.00

1. MINIMUM EFFECTIVE EMBEDMENT IS AFTER THE ANCHOR HAS BEEN SET.
2. ANCHOR SPACING IS THE CENTER-TO-CENTER DISTANCE BETWEEN ADJACENT ANCHORS.
3. LOAD VALUES SHOWN ARE ALLOWABLE STRESS DESIGN (ASD). CAPACITIES DERIVED IN CONFORMANCE WITH ASCE 7-16 & ACI 318. Ωo=2.0

DUAL ANCHOR DEWALT SCREW-BOLT+ SCREW ANCHOR WITH STRUT SEISMIC BRACE CONNECTION IN FORM POUR SLAB

REGISTERED PROFESSIONAL ENGINEER MARCIN WASAZNIK S-6612 STRUCTURAL STATE OF CALIFORNIA

ISAT
A Division of Tomarco Contractor Specialties
International Seismic Application Technology
14848 Northam Street, La Mirada, CA 90638
877-999-4728 (Toll Free) 714-523-0845 (fax)
www.isatsb.com

Rev. 2
11/21/23
Page
D1.2DSB4

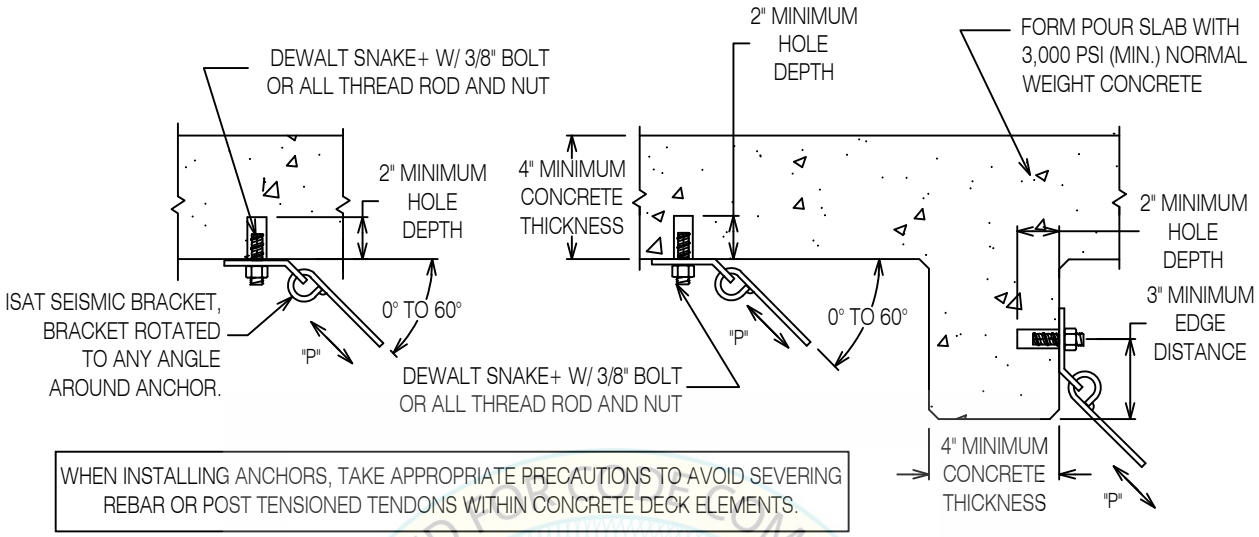

WHEN INSTALLING ANCHORS, TAKE APPROPRIATE PRECAUTIONS TO AVOID SEVERING REBAR OR POST TENSIONED TENDONS WITHIN CONCRETE DECK ELEMENTS.

HCAi
REVIEWED FOR CODE COMPLIANCE
BY: William Staehlin
DATE: 01-26-2024
CALIFORNIA BUILDING CODE 2022

SINGLE ANCHOR CONNECTION DETAILS
Normal Weight Concrete
Form Pour Slab with Minimum Concrete Strength of 3,000 psi
Seismically Qualified for Anchorage In Cracked Concrete
Dewalt Snake+ Anchor
ICC Report No. ESR-2272 (Dated December, 2022), Table 2 and 3.

Brace Anchorage Designation	Anchor Quantity	Anchor Diameter Inch	Maximum Brace Load (P) Lbs.	Minimum Hole Depth [1] Inch	Minimum Effective Embedment [2] Inch	Minimum Anchor Spacing Inch	Critical Edge Distance Inch	Screwdriver Installation Max. Torque Ft-Lbs.	Rod or Bolt Installation Max. Torque Ft-Lbs.
1PSN38	1	3/8	186	2	1 1/8	6 3/4	3	345	8

1. MINIMUM HOLE DEPTH IS TO BE VERIFIED BY THE INSPECTOR.
2. MINIMUM EFFECTIVE EMBEDMENT IS AFTER THE ANCHOR HAS BEEN SET.
3. LOAD VALUES SHOWN ARE ALLOWABLE STRESS DESIGN (ASD). CAPACITIES DERIVED IN CONFORMANCE WITH ASCE 7-16 & ACI 318. Ω_o=2.0

SINGLE ANCHOR DEWALT SNAKE+ FOR SEISMIC BRACE CONNECTION IN FORM POUR SLAB

REGISTERED PROFESSIONAL ENGINEER MARCIN WASAZNIK S-6612 STRUCTURAL STATE OF CALIFORNIA

ISAT
A Division of Tomarco Contractor Specialties

International Seismic Application Technology
14848 Northam Street, La Mirada, CA 90638
877-999-4728 (Toll Free) 714-523-0845 (fax)
www.isatsb.com

Rev. 10
11/21/23

Page
D1.1SN

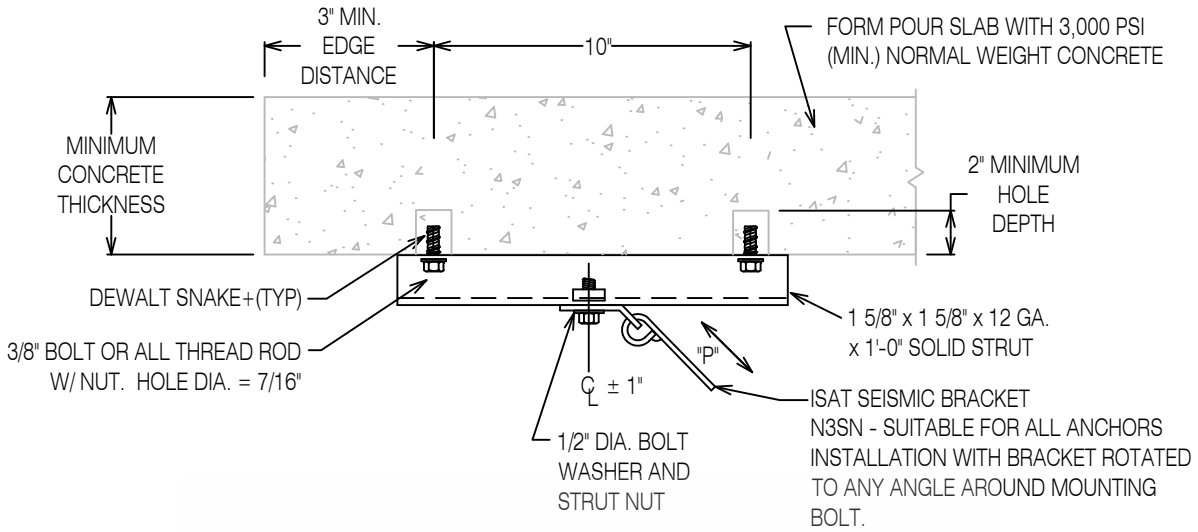

WHEN INSTALLING ANCHORS, TAKE APPROPRIATE PRECAUTIONS TO AVOID SEVERING REBAR OR POST TENSIONED TENDONS WITHIN CONCRETE DECK ELEMENTS.

HCAi
REVIEWED FOR CODE COMPLIANCE
DATE: 01-26-2024
CALIFORNIA BUILDING CODE 2022

DUAL ANCHOR CONNECTION DETAILS

Normal Weight Concrete

Form Pour Slab with Minimum Concrete Strength of 3,000 psi

Seismically Qualified for Anchorage In Cracked Concrete

Dewalt Snake+ Anchor

ICC Report No. ESR-2272 (Dated December, 2022), Table 2 and 3.

Brace Anchorage Designation	Anchor Quantity	Anchor Diameter Inch	Maximum Brace Load (P) Lbs.	Minimum Hole Depth [1] Inch	Minimum Effective Embedment [2] Inch	Minimum Anchor Spacing Inch	Critical Edge Distance Inch	Screwdriver Installation Max. Torque Ft-Lbs.	Rod or Bolt Installation Max. Torque Ft-Lbs.
2PSN38S	2	3/8	310	2	1 1/8	6 3/4	3	345	8

1. MINIMUM HOLE DEPTH IS TO BE VERIFIED BY THE INSPECTOR.
2. MINIMUM EFFECTIVE EMBEDMENT IS AFTER THE ANCHOR HAS BEEN SET.
3. LOAD VALUES SHOWN ARE ALLOWABLE STRESS DESIGN (ASD). CAPACITIES DERIVED IN CONFORMANCE WITH ASCE 7-16 AND ACI 318. Ω_O=2.0.

DUAL ANCHOR POWERS SNAKE+ WITH STRUT SEISMIC BRACE CONNECTION IN FORM POUR SLAB

REGISTERED PROFESSIONAL ENGINEER
MARCIN WASAZNIK
S-6612
STRUCTURAL
STATE OF CALIFORNIA
01/26/2024

ISAT
A Division of Tomarco Contractor Specialties
International Seismic Application Technology
14848 Northam Street, La Mirada, CA 90638
877-999-4728 (Toll Free) 714-523-0845 (fax)
www.isatsb.com

Rev. 10
11/21/23

Page
D1.2SN

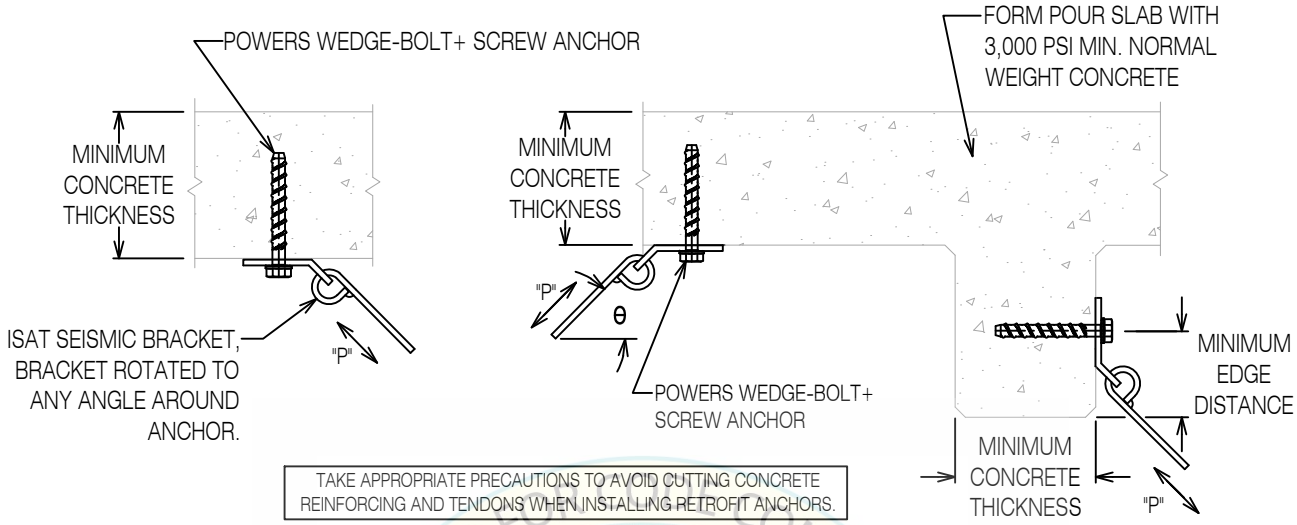

TAKE APPROPRIATE PRECAUTIONS TO AVOID CUTTING CONCRETE REINFORCING AND TENDONS WHEN INSTALLING RETROFIT ANCHORS.

HCAi
OPM-0403
REVIEWED FOR CODE COMPLIANCE
CALIFORNIA BUILDING CODE 2019

Seismically Qualified For Anchorage In Cracked Concrete
Seismic Design Categories D, E and F
Powers Wedge-Bolt+ Screw Anchor, Minimum 3000 psi NWC
ICC Report No. ESR-2526 (Dated June 2017), Table 1, 2 and 3

Brace Anchorage Designation	Anchor Diameter Inch	Brace Angle 30°≤ θ ≤ 36° Maximum Brace Load Pmax[4] Lbs.	Brace Angle 36°< θ ≤ 60° Maximum Brace Load Pmax[4] Lbs.	Minimum Hole Depth Inch	Minimum Effective Embed.[1] Inch	Minimum Concrete Thickness Inch	Maximum Impact Wrench Torque Ft-Lbs.	Minimum Anchor Spacing[2] Inch	Edge Distance[3] Inch
1WB3810	3/8	275	254	2 1/4	1.43	3 1/2	245	6.75	2.67
1WB1212	1/2	296	287	2 3/4	1.65	4	300	6.75	2.75
1WB1216	1/2	701	622	4	2.50	6	300	7.50	5.25
1WB5816	5/8	554	543	4	2.15	6	350	6.75	3.63
1WB5820	5/8	1,078	999	5	3.10	7	350	9.30	5.82

1. MINIMUM EFFECTIVE EMBEDMENT IS AFTER THE ANCHOR HAS BEEN SET.
2. ANCHOR SPACING IS THE CENTER-TO-CENTER DISTANCE BETWEEN TWO ANCHORS.
3. AT CONCRETE CORNERS USE THE TABULATED VALUE FOR "EDGE DISTANCE FOR PMAX" FOR ONE EDGE WHERE THE "MIN. EDGE DISTANCE" IS USED FOR THE PERPENDICULAR CONCRETE FACE.
4. LOAD VALUES SHOWN ARE ALLOWABLE STRESS DESIGN (ASD). CAPACITIES DERIVED IN CONFORMANCE WITH ASCE 7-10, PIN 62 & ACI 318-11, Appendix D. Ωo=2.0

SINGLE POWERS WEDGE-BOLT+ SCREW ANCHOR FOR SEISMIC BRACE CONNECTION IN FORM POUR SLAB

REGISTERED PROFESSIONAL ENGINEER MARCIN WASAZNIK S 6612 STRUCTURAL STATE OF CALIFORNIA

ISAT
A Division of Tomarco Contractor Specialties
International Seismic Application Technology
14848 Northam Street, La Mirada, CA 90638
877-999-4728 (Toll Free) 714-523-0845 (fax)
www.isatsb.com

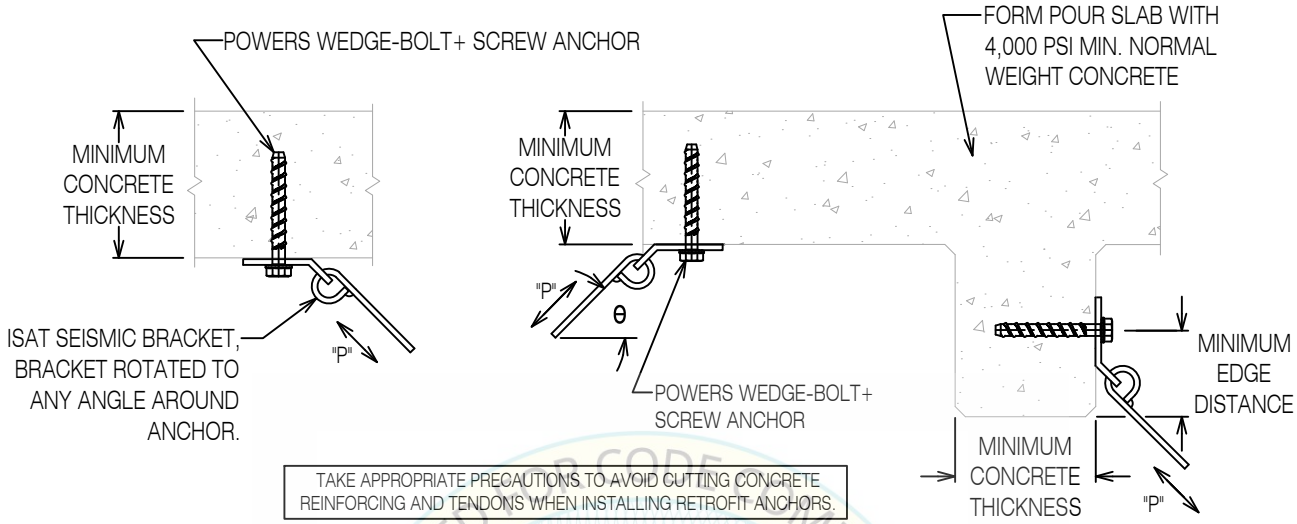

Seismically Qualified For Anchorage In Cracked Concrete
Seismic Design Categories D, E and F
Powers Wedge-Bolt+ Screw Anchor, Minimum 4000 psi NWC
ICC Report No. ESR-2526 (Dated June 2017), Table 1, 2 and 3

Brace Anchorage Designation	Anchor Diameter Inch	Brace Angle 30°≤ θ ≤ 36° Maximum Brace Load Pmax[4] Lbs.	Brace Angle 36°< θ ≤ 60° Maximum Brace Load Pmax[4] Lbs.	Minimum Hole Depth Inch	Minimum Effective Embed.[1] Inch	Minimum Concrete Thickness Inch	Maximum Impact Wrench Torque Ft-Lbs.	Minimum Anchor Spacing[2] Inch	Edge Distance[3] Inch
1WB3810	3/8	317	293	2 1/4	1.43	3 1/2	245	6.75	2.67
1WB1212	1/2	342	331	2 3/4	1.65	4	300	6.75	2.75
1WB1216	1/2	809	718	4	2.50	6	300	7.50	5.25
1WB5816	5/8	640	626	4	2.15	6	350	6.75	3.63
1WB5820	5/8	1,244	1,154	5	3.10	7	350	9.30	5.82

1. MINIMUM EFFECTIVE EMBEDMENT IS AFTER THE ANCHOR HAS BEEN SET.
2. ANCHOR SPACING IS THE CENTER-TO-CENTER DISTANCE BETWEEN TWO ANCHORS.
3. AT CONCRETE CORNERS USE THE TABULATED VALUE FOR "EDGE DISTANCE FOR PMAX" FOR ONE EDGE WHERE THE "MIN. EDGE DISTANCE" IS USED FOR THE PERPENDICULAR CONCRETE FACE.
4. LOAD VALUES SHOWN ARE ALLOWABLE STRESS DESIGN (ASD). CAPACITIES DERIVED IN CONFORMANCE WITH ASCE 7-10, PIN 62 & ACI 318-11, Appendix D. Ωo=2.0

SINGLE POWERS WEDGE-BOLT+ SCREW ANCHOR FOR SEISMIC BRACE CONNECTION IN FORM POUR SLAB

REGISTERED PROFESSIONAL ENGINEER MARCIN WASAZNIK S 6612 STRUCTURAL STATE OF CALIFORNIA

ISAT
A Division of Tomarco Contractor Specialties

International Seismic Application Technology
14848 Northam Street, La Mirada, CA 90638
877-999-4728 (Toll Free) 714-523-0845 (fax)
www.isatsb.com

Rev. 7
06/21/18

Page
D1.1WB4

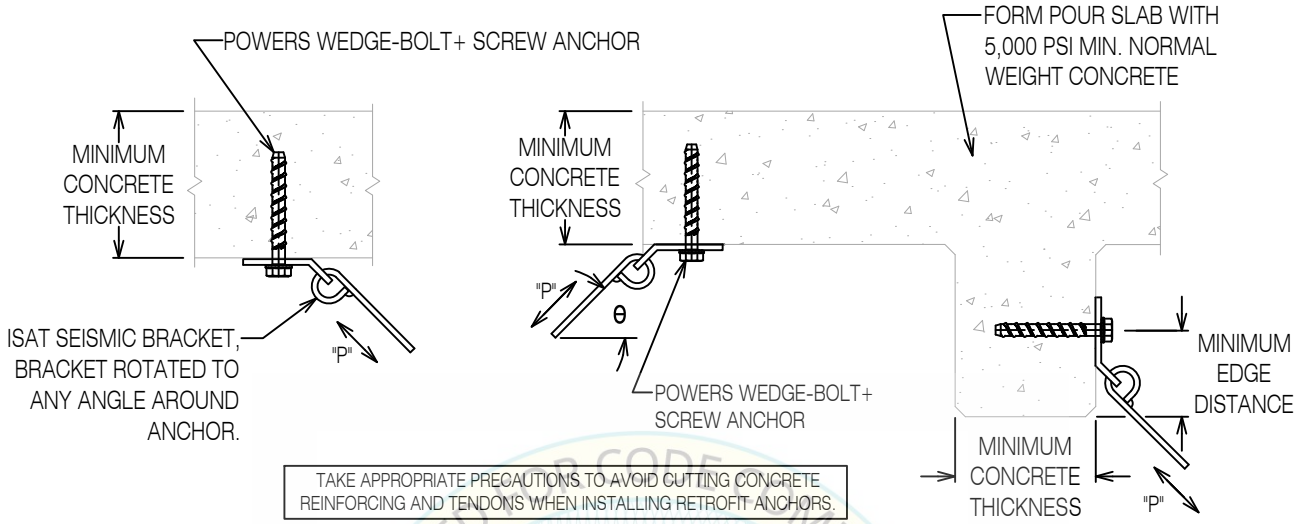

TAKE APPROPRIATE PRECAUTIONS TO AVOID CUTTING CONCRETE REINFORCING AND TENDONS WHEN INSTALLING RETROFIT ANCHORS.

HCAi
REVIEWED FOR CODE COMPLIANCE
OPM-0403 William Staehlin
DATE: 2024
CITY OF LA BUILDING CODE

Seismically Qualified For Anchorage In Cracked Concrete
Seismic Design Categories D, E and F
Powers Wedge-Bolt+ Screw Anchor, Minimum 5000 psi NWC
ICC Report No. ESR-2526 (Dated June 2017), Table 1, 2 and 3

Brace Anchorage Designation	Anchor Diameter Inch	Brace Angle 30°≤ θ ≤ 36° Maximum Brace Load Pmax[4] Lbs.	Brace Angle 36°< θ ≤ 60° Maximum Brace Load Pmax[4] Lbs.	Minimum Hole Depth Inch	Minimum Effective Embed.[1] Inch	Minimum Concrete Thickness Inch	Maximum Impact Wrench Torque Ft-Lbs.	Minimum Anchor Spacing[2] Inch	Edge Distance[3] Inch
1WB3810	3/8	355	328	2 1/4	1.43	3 1/2	245	6.75	2.67
1WB1212	1/2	383	370	2 3/4	1.65	4	300	6.75	2.75
1WB1216	1/2	905	803	4	2.50	6	300	7.50	5.25
1WB5816	5/8	715	700	4	2.15	6	350	6.75	3.63
1WB5820	5/8	1,391	1,290	5	3.10	7	350	9.30	5.82

1. MINIMUM EFFECTIVE EMBEDMENT IS AFTER THE ANCHOR HAS BEEN SET.
2. ANCHOR SPACING IS THE CENTER-TO-CENTER DISTANCE BETWEEN TWO ANCHORS.
3. AT CONCRETE CORNERS USE THE TABULATED VALUE FOR "EDGE DISTANCE FOR PMAX" FOR ONE EDGE WHERE THE "MIN. EDGE DISTANCE" IS USED FOR THE PERPENDICULAR CONCRETE FACE.
4. LOAD VALUES SHOWN ARE ALLOWABLE STRESS DESIGN (ASD). CAPACITIES DERIVED IN CONFORMANCE WITH ASCE 7-10, PIN 62 & ACI 318-11, Appendix D. Ωo=2.0

SINGLE POWERS WEDGE-BOLT+ SCREW ANCHOR FOR SEISMIC BRACE CONNECTION IN FORM POUR SLAB

REGISTERED PROFESSIONAL ENGINEER MARCIN WASAZNIK S 6612 STRUCTURAL STATE OF CALIFORNIA

ISAT
A Division of Tomarco Contractor Specialties
International Seismic Application Technology
14848 Northam Street, La Mirada, CA 90638
877-999-4728 (Toll Free) 714-523-0845 (fax)
www.isatsb.com

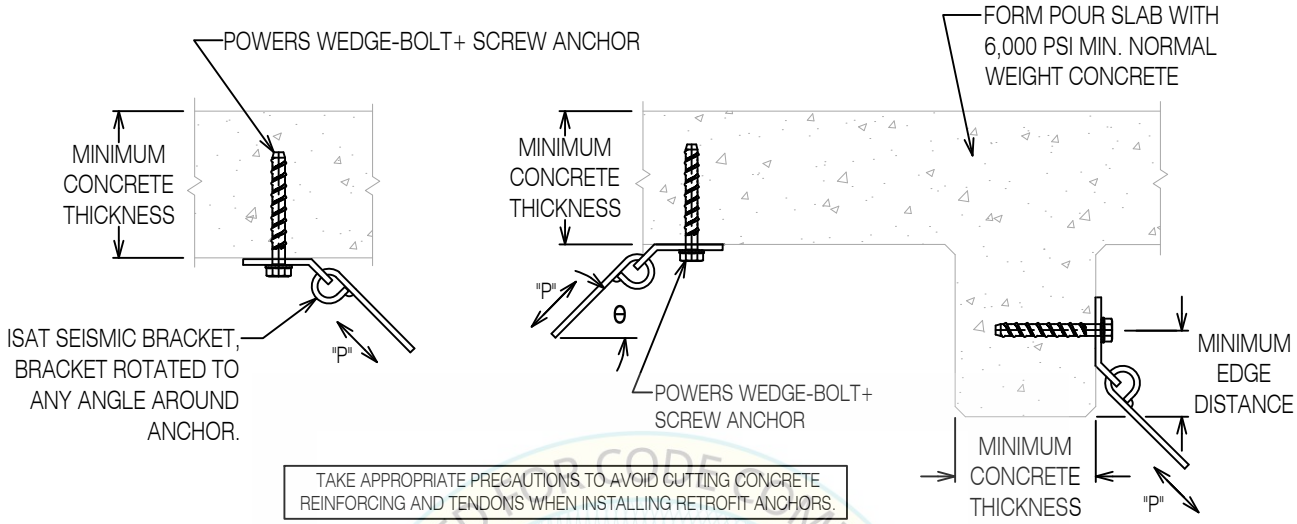

Seismically Qualified For Anchorage In Cracked Concrete
Seismic Design Categories D, E and F
Powers Wedge-Bolt+ Screw Anchor, Minimum 6000 psi NWC
ICC Report No. ESR-2526 (Dated June 2017), Table 1, 2 and 3

Brace Anchorage Designation	Anchor Diameter Inch	Brace Angle 30°≤ θ ≤ 36° Maximum Brace Load Pmax[4] Lbs.	Brace Angle 36°< θ ≤ 60° Maximum Brace Load Pmax[4] Lbs.	Minimum Hole Depth Inch	Minimum Effective Embed.[1] Inch	Minimum Concrete Thickness Inch	Maximum Impact Wrench Torque Ft-Lbs.	Minimum Anchor Spacing[2] Inch	Edge Distance[3] Inch
1WB3810	3/8	389	359	2 1/4	1.43	3 1/2	245	6.75	2.67
1WB1212	1/2	419	405	2 3/4	1.65	4	300	6.75	2.75
1WB1216	1/2	991	879	4	2.50	6	300	7.50	5.25
1WB5816	5/8	784	767	4	2.15	6	350	6.75	3.63
1WB5820	5/8	1,524	1,413	5	3.10	7	350	9.30	5.82

1. MINIMUM EFFECTIVE EMBEDMENT IS AFTER THE ANCHOR HAS BEEN SET.
2. ANCHOR SPACING IS THE CENTER-TO-CENTER DISTANCE BETWEEN TWO ANCHORS.
3. AT CONCRETE CORNERS USE THE TABULATED VALUE FOR "EDGE DISTANCE FOR PMAX" FOR ONE EDGE WHERE THE "MIN. EDGE DISTANCE" IS USED FOR THE PERPENDICULAR CONCRETE FACE.
4. LOAD VALUES SHOWN ARE ALLOWABLE STRESS DESIGN (ASD). CAPACITIES DERIVED IN CONFORMANCE WITH ASCE 7-10, PIN 62 & ACI 318-11, Appendix D. Ωo=2.0

SINGLE POWERS WEDGE-BOLT+ SCREW ANCHOR FOR SEISMIC BRACE CONNECTION IN FORM POUR SLAB

REGISTERED PROFESSIONAL ENGINEER MARCIN WASAZNIK S 6612 STRUCTURAL STATE OF CALIFORNIA

ISAT
A Division of Tomarco Contractor Specialties

International Seismic Application Technology
14848 Northam Street, La Mirada, CA 90638
877-999-4728 (Toll Free) 714-523-0845 (fax)
www.isatsb.com

Rev. 7
07/10/18

Page
D1.1WB6

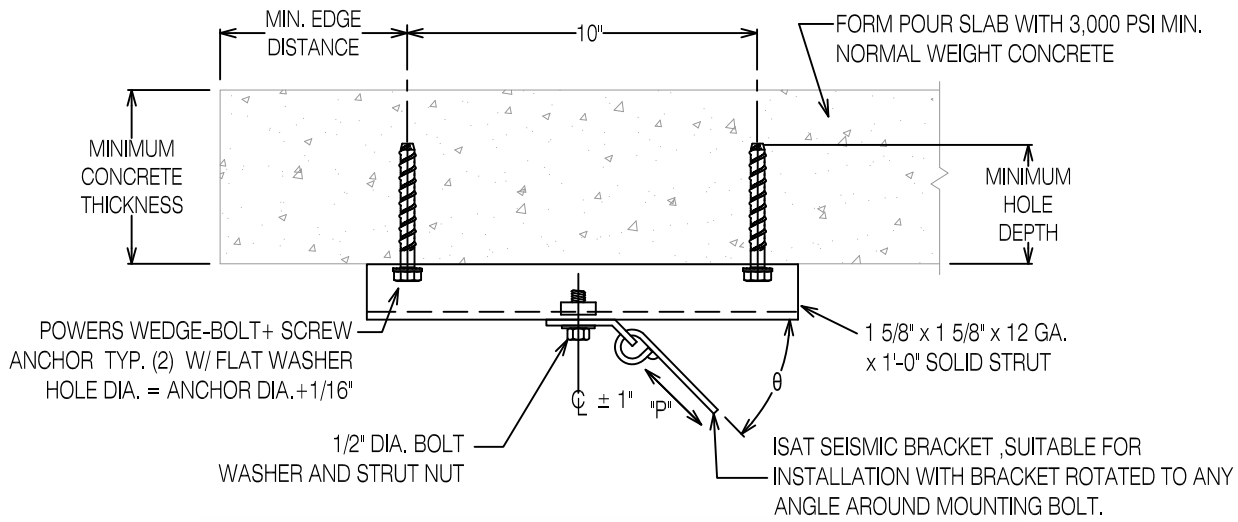

TAKE APPROPRIATE PRECAUTIONS TO AVOID CUTTING CONCRETE REINFORCING AND TENDONS WHEN INSTALLING RETROFIT ANCHORS.

REVIEWED FOR CODE COMPLIANCE
HCAi
OPM-0403
01-26-2024
CALIFORNIA BUILDING CODE

Seismically Qualified For Anchorage In Cracked Concrete
Seismic Design Categories D, E and F
Powers Wedge-Bolt+ Screw Anchor, Minimum 3000 psi NWC
ICC Report No. ESR-2526 (Dated June 2018), Table 1, 2 and 3

Brace Anchorage Designation	Anchor Diameter Inch	Brace Angle: 30° ≤ θ ≤ 36° Maximum Brace Load (P) Lbs.	Brace Angle: 36° < θ ≤ 60° Maximum Brace Load (P) Lbs.	Minimum Hole Depth Inch	Minimum Effective Embed. [1] Inch	Minimum Concrete Thickness Inch	Maximum Impact Wrench Torque Ft-Lbs.	Min. [2] Anchor Spacing Inch	Minimum Edge Distance Inch
2WB3810S	3/8	458	423	2 1/4	1.43	3 1/2	245	6.75	2.67
2WB1212S	1/2	494	480	2 3/4	1.65	4	300	6.75	2.75
2WB1216S	1/2	1,168	1,036	4	2.50	6	300	7.50	5.25
2WB5820S	5/8	1,936	1,743	5	3.10	7	350	9.30	5.82

1. MINIMUM EFFECTIVE EMBEDMENT IS AFTER THE ANCHOR HAS BEEN SET.
2. ANCHOR SPACING IS THE CENTER-TO-CENTER DISTANCE BETWEEN ADJACENT ANCHORS.
3. LOAD VALUES SHOWN ARE ALLOWABLE STRESS DESIGN (ASD). CAPACITIES DERIVED IN CONFORMANCE WITH ASCE 7-10, PIN 62 & ACI 318-11, Appendix D. Ω_o=2.0

DUAL ANCHOR POWERS WEDGE-BOLT+ SCREW ANCHOR SEISMIC BRACE CONNECTION IN FORM POUR SLAB

REGISTERED PROFESSIONAL ENGINEER MARCIN WASAZNIK S 6612 STRUCTURAL STATE OF CALIFORNIA

ISAT
A Division of Tomarco Contractor Specialties
International Seismic Application Technology
14848 Northam Street, La Mirada, CA 90638
877-999-4728 (Toll Free) 714-523-0845 (fax)
www.isatsb.com

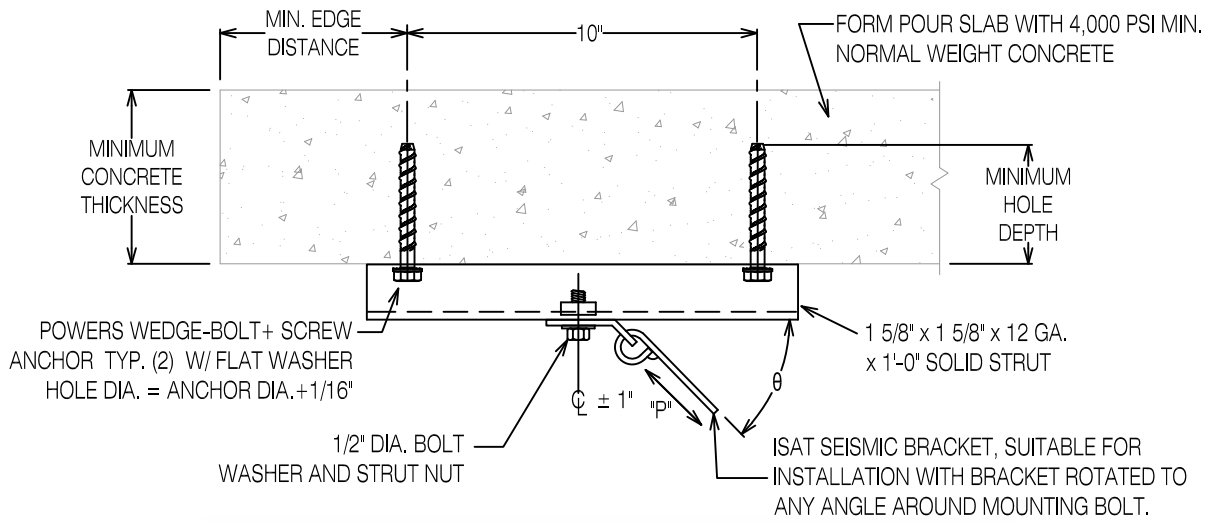

TAKE APPROPRIATE PRECAUTIONS TO AVOID CUTTING CONCRETE REINFORCING AND TENDONS WHEN INSTALLING RETROFIT ANCHORS.

REVIEWED FOR CODE COMPLIANCE
HCAi
William Staehlin
DATE: 01-26-2024
UNIFORM BUILDING CODE 2020

Seismically Qualified For Anchorage In Cracked Concrete
Seismic Design Categories D, E and F
Powers Wedge-Bolt+ Screw Anchor, Minimum 4000 psi NWC
ICC Report No. ESR-2526 (Dated June 2018), Table 1, 2 and 3

Brace Anchorage Designation	Anchor Diameter Inch	Brace Angle 30° ≤ θ ≤ 36° Maximum Brace Load (P) Lbs.	Brace Angle 36° < θ ≤ 60° Maximum Brace Load (P) Lbs.	Minimum Hole Depth Inch	Minimum Effective Embed.[1] Inch	Minimum Concrete Thickness Inch	Maximum Impact Wrench Torque Ft-Lbs.	Min.[2] Anchor Spacing Inch	Minimum Edge Distance Inch
2WB3810S	3/8	529	489	2 1/4	1.43	3 1/2	245	6.75	2.67
2WB1212S	1/2	570	554	2 3/4	1.65	4	300	6.75	2.75
2WB1216S	1/2	1,315	1,196	4	2.50	6	300	7.50	5.25
2WB5820S	5/8	1,936	1,936	5	3.10	7	350	9.30	5.82

1. MINIMUM EFFECTIVE EMBEDMENT IS AFTER THE ANCHOR HAS BEEN SET.
2. ANCHOR SPACING IS THE CENTER-TO-CENTER DISTANCE BETWEEN ADJACENT ANCHORS.
3. LOAD VALUES SHOWN ARE ALLOWABLE STRESS DESIGN (ASD). CAPACITIES DERIVED IN CONFORMANCE WITH ASCE 7-10, PIN 62 & ACI 318-11, Appendix D. Ω_o=2.0

DUAL ANCHOR POWERS WEDGE-BOLT+ SCREW ANCHOR SEISMIC BRACE CONNECTION IN FORM POUR SLAB

REGISTERED PROFESSIONAL ENGINEER MARCIN WASAZNIK S 6612 STRUCTURAL STATE OF CALIFORNIA

ISAT
A Division of Tomarco Contractor Specialties
International Seismic Application Technology
14848 Northam Street, La Mirada, CA 90638
877-999-4728 (Toll Free) 714-523-0845 (fax)
www.isatsb.com

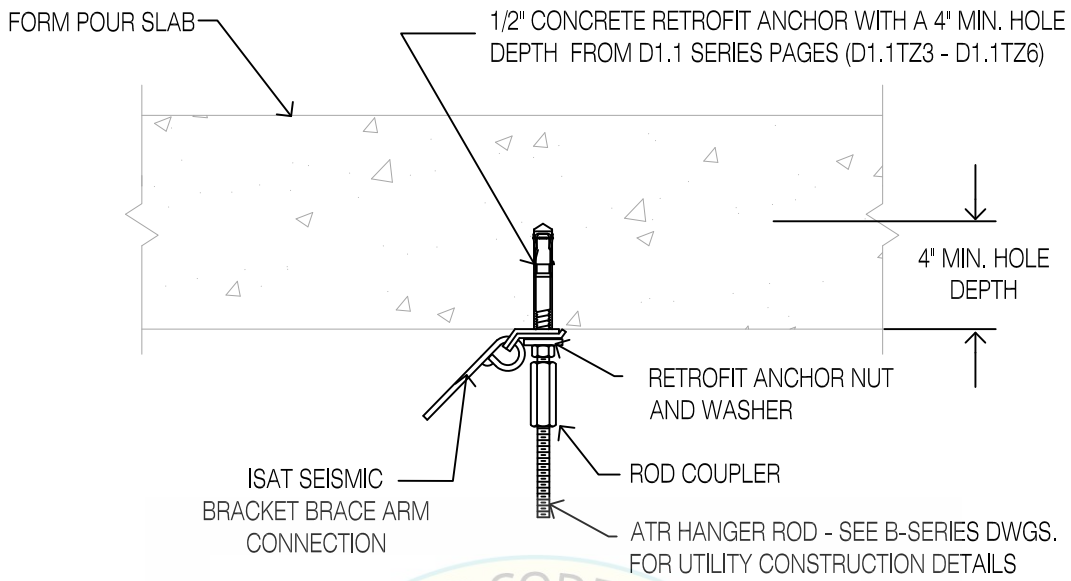

Max. Seismic Design Acceleration G [1]	Max. Utility Trapeze Load Lbs./Ft.	Max. Vertical Support Spacing Ft.	Transverse Brace Spacing Ft	Longitudinal Brace Spacing Ft
0.2	50	10	40	60
0.40	40	10	40	60
0.60	30	10	40	60
0.60	50	10	20	30
0.80	20	10	40	60
0.80	40	10	20	30
1.00	20	10	40	60

Maximum Equipment Weight - Lbs. [3]				
G = 0.20	G = 0.40	G = 0.60	G = 0.80	G = 1.00
1100	900	800	700	600

1. SEISMIC G-FORCE AT WORKING LOADS.
2. DESIGN IS BASED ON 2013 CBC AND INCLUDES PROVISIONS FOR VERTICAL SEISMIC ACCELERATIONS AND A FORCE INCREASE FOR ANCHORAGE INTO CONCRETE FROM ASCE 7 SECTION 13.4.2.
3. EQUIPMENT SUSPENDED BY ONLY TWO RODS IS LIMITED TO 100 POUNDS FOR ALL DESIGN ACCELERATIONS.

REVIEWED FOR CODE COMPLIANCE
HCAi
OPM-0403
BY: William Staehlin
DATE: 01-26-2024
CALIFORNIA BUILDING CODE, 2022

BRACE CONNECTION TO VERTICAL SUPPORT ROD

REGISTERED PROFESSIONAL ENGINEER MARCIN WASAZNIK S 6612 STRUCTURAL STATE OF CALIFORNIA

ISAT
A Division of Tomarco Contractor Specialties

International Seismic Application Technology
14848 Northam Street, La Mirada, CA 90638
877-999-4728 (Toll Free) 714-523-0845 (fax)
www.isatsb.com

Rev. 7
02/23/18

Page
D1.6

Schedule of Anchor Connections
For Seismic Brace Arm Attachments
Light Weight Concrete
Metal Deck Slab with Minimum Concrete Strength of 3,000 psi

Anchor Type: Powers	ISAT Anchor Designation	Maximum Load (P)[1] (lbs)
4SD25824P	L28	2,880
	L25	2,500
	L24	2,400
	L23	2,300
	L22	2,200
	L21	2,100
	L20	2,000
	L19	1,900
4SD21218F	L18	1,800
	L17	1,700
	L16	1,600
2SD25824S	L15	1,500
	L14	1,400
	L13	1,300
	L12	1,200
	L11	1,100
1SD25824	L10	1,000
	L9	900
	L8	800
	L7	700
1SD21218	L6	600
	L5	500
	L4	400
1SD23812	L3	300
	L2	200
	L1	100

1. SUITABLE FOR SEISMIC AXIAL BRACE ARM LOADS UP TO 60 DEGREES BRACE INCLINATION.

INSTRUCTIONS

A. THE "C" SERIES BRACING TABLES CALL-OUT THE REQUIRED "MIN. BRACE ANCHORAGE" FOR A GIVEN UTILITY AND "MAXIMUM SEISMIC DESIGN FORCE".

B. FROM ANY OF THE D SERIES PAGES, SELECT AN ANCHORAGE WITH A DESIGNATOR EQUAL TO OR HIGHER THAN THAT DISPLAYED UNDER THE HEADING "MIN. BRACE ANCHORAGE" WITHIN THE C SERIES BRACING TABLES.

C. UTILIZE ANCHORS FROM ONLY ONE MANUFACTURER. DO NOT MIX.

D. SELECT ANCHORAGES APPROPRIATE FOR THE MINIMUM SLAB THICKNESS AND MINIMUM CONCRETE STRENGTH.

REVIEWED FOR CODE COMPLIANCE
HCAI
OPM-0403
BY: William Staehlin
DATE: 01-26-2024
CALIFORNIA BUILDING CODE, 2022

CONCRETE ON METAL DECK
SEISMIC RESTRAINT ANCHORAGE CONNECTIONS

REGISTERED PROFESSIONAL ENGINEER
MARCIN WASAZNIK
S 6612
STRUCTURAL
STATE OF CALIFORNIA

ISAT
A Division of Tomarco Contractor Specialties

International Seismic Application Technology
14848 Northam Street, La Mirada, CA 90638
877-999-4728 (Toll Free) 714-523-0845 (fax)
www.isatsb.com

Rev. 3
05/04/18

Page
D2

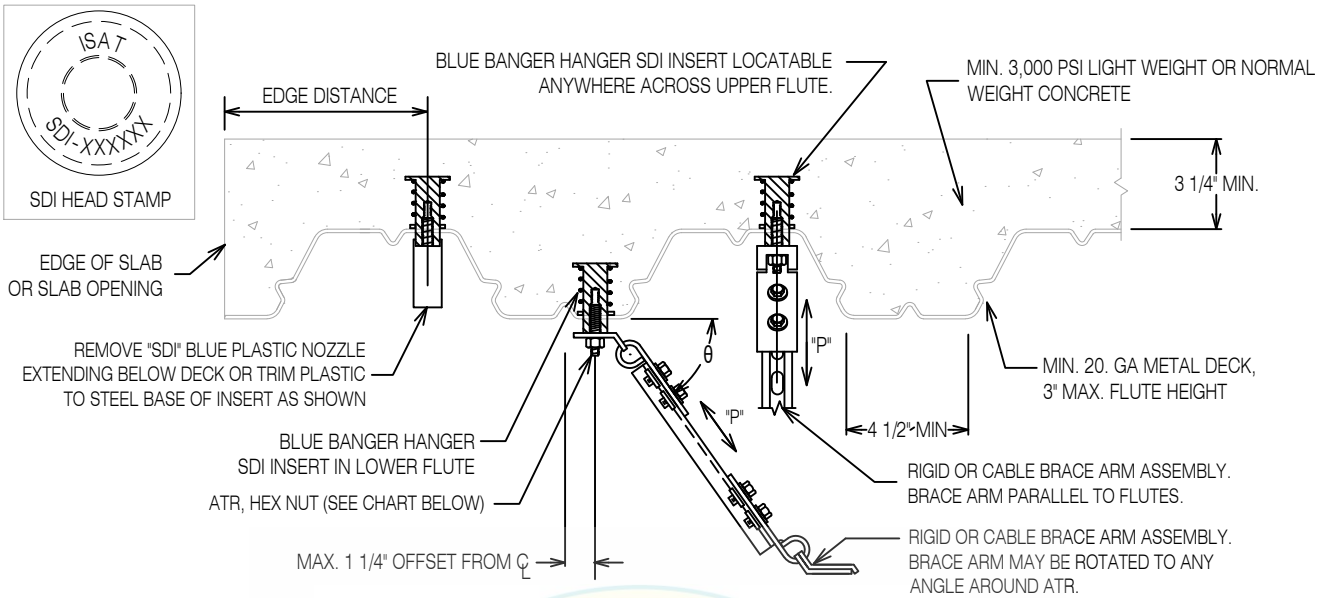

REVIEWED FOR CODE COMPLIANCE
HCAi
BY: WILLIAM STAEHLIN
DATE: 01/26/2024
CALIFORNIA BUILDING CODE, 2022

Blue Banger Hanger Steel Deck Insert (SDI)
Seismically Qualified for Anchorage In Cracked Concrete
Seismic Design Categories D, E and F
ICC Report No. ESR-3599 (November, 2017), Table [2]

Brace Anchorage Designation	Deck Insert Part No.	All Thread Rod Dia. (ATR) Inch	Flute Installat'n Location	Maximum Brace Reaction (P) At Minimum Concrete Strength				Nominal Insert Height Inch	Minimum Edge Distance Inch	Min.[3] Spacing Inch
				3,000 psi LWC Lbs		4,000 psi LWC Lbs				
				30°≤ θ ≤ 36°	36°< θ ≤ 60°	30°≤ θ ≤ 36°	36°< θ ≤ 60°			
L4BL3	SDI143812	1/2 [4]	Lower	512	463	-	-	2	6	6
L7BU3			Upper	744	729					
L5BL4	SDI143812	1/2 [4]	Lower	-	-	554	515			
L7BU4			Upper			791	785			
L4.1BL3	SDI381258	5/8	Lower	473	442	-	-			
L4BU3			Upper	466	470					
L4BL4	SDI381258	5/8	Lower	-	-	509	487			
L4BU4			Upper			481	488			

1. LOAD VALUES SHOWN ARE ALLOWABLE STRESS DESIGN (ASD). CAPACITIES DERIVED IN CONFORMANCE WITH ASCE 7-10, PIN 62 & ACI 318-11, Appendix D. Ωo=2.0
2. LIGHT WEIGHT CONCRETE OR NORMAL WEIGHT CONCRETE.
3. SPACING MEASURED ALONG LENGTH OF FLUTE. EDGE DISTANCE PERPENDICULAR TO DIRECTION SHOWN (END DISTANCE) SHALL BE 6 INCHES.
4. f_{uta} MAX = 60 KSI

SINGLE BLUE BANGER HANGER "SDI" DECK INSERT SEISMIC BRACE CONNECTION

REGISTERED PROFESSIONAL ENGINEER MARCIN WASAZNIK S 6612 STRUCTURAL STATE OF CALIFORNIA

ISAT
A Division of Tomarco Contractor Specialties
International Seismic Application Technology
14848 Northam Street, La Mirada, CA 90638
877-999-4728 (Toll Free) 714-523-0845 (fax)
www.isatsb.com

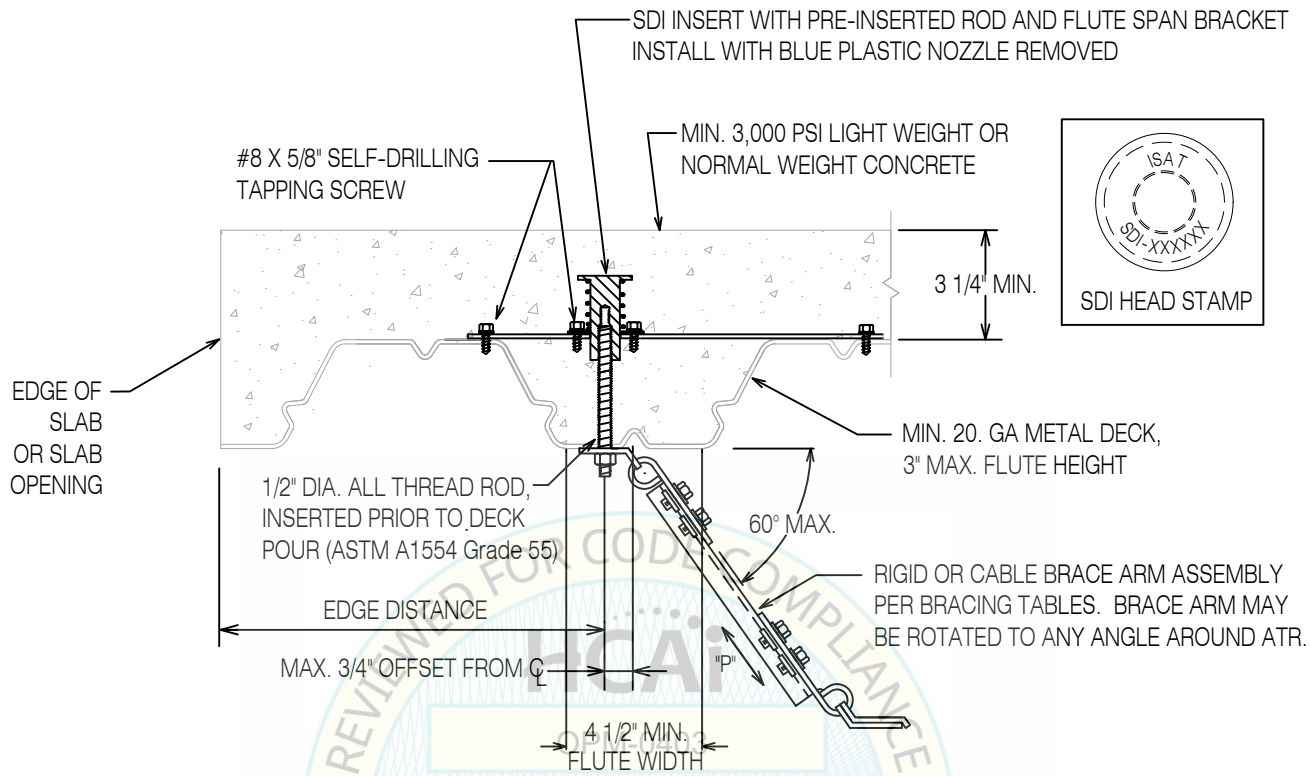

Blue Banger Hanger Steel Deck Insert (SDI)
Seismically Qualified for Anchorage In Cracked Concrete
Seismic Design Categories D, E and F
ICC Report No. ESR-3599 (November, 2017), Table 2

Brace Anchorage Designation	Deck Insert Part No.	All Thread Rod Diameter (ATR) Inch	Maximum Brace Load (P) Lbs	Full Capacity Insert Spacing Inch	Brace Load (P) At 10" Spacing Lbs	Brace Load (P) At 9" Spacing Lbs	Brace Load (P) At 5" Spacing Lbs	Minimum Edge Distance Inch	Minimum Concrete Strength
L17B3	SDI143812 OR SDI381258	1/2 [4]	1,741	16	1,508	1,437	1,222	6	3000

1. LOAD VALUES SHOWN ARE ALLOWABLE STRESS DESIGN (ASD). CAPACITIES DERIVED IN CONFORMANCE WITH ASCE 7-10, PIN 62 & ACI 318-11, Appendix D. Ωo=2.0
2. LIGHT WEIGHT CONCRETE OR NORMAL WEIGHT CONCRETE.
3. SPACING MEASURED PARALLEL TO FLUTE MAIN AXIS.
4. f_{uta}MAX = 60 KSI

SINGLE BLUE BANGER HANGER "SDI" INSERT MOUNTED IN HIGH FLUTE WITH FLUTE SPAN BRACKET (FSB) SEISMIC BRACE CONNECTION

REGISTERED PROFESSIONAL ENGINEER
MARCIN WASAZNIK
S 6612
STRUCTURAL
STATE OF CALIFORNIA

ISAT
A Division of Tomarco Contractor Specialties

International Seismic Application Technology
14848 Northam Street, La Mirada, CA 90638
877-999-4728 (Toll Free) 714-523-0845 (fax)
www.isatsb.com

Rev. 7
06/18/18

Page
D2.1.1B

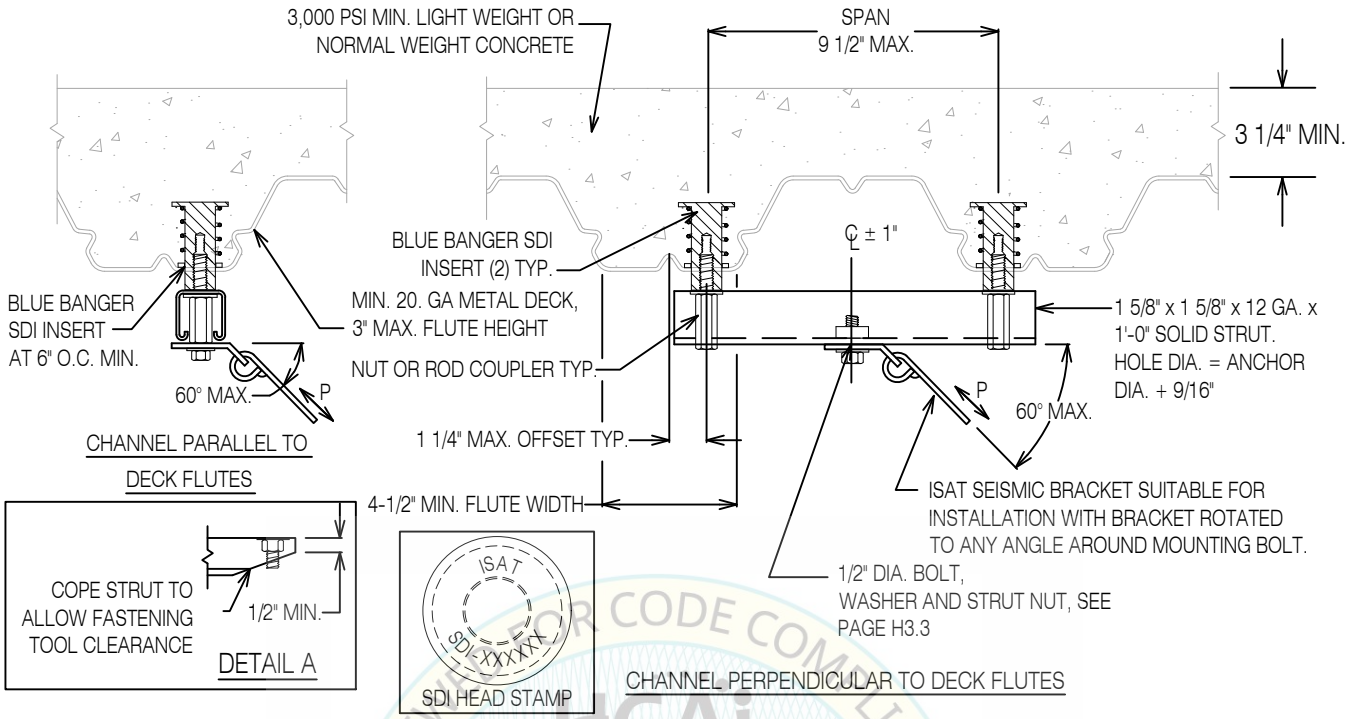

Blue Banger Hanger Steel Deck Insert (SDI)
Seismically Qualified for Anchorage In Cracked Concrete
Seismic Design Categories D, E and F
ICC Report No. ESR-3599 (November, 2017), Table [2]

Brace Anchorage Designation	Deck Insert Part No.	All Thread Rod Dia. (ATR) Inch	Max. Brace Reaction (P) At Min. Concrete Strength 3,000 psi LWC Lbs	4,000 psi LWC Lbs	Nominal Insert Height Inch	Minimum Edge Distance Inch	Minimum Spacing Inch
L7B3	SDI143812	1/2 [4]	768	-	2	6	6
L7.1B3	SDI381258	5/8 [2]	735	-			
L8B4	SDI143812	1/2 [4]	-	856			
L8.1B4	SDI381258	5/8 [2]	-	815			

1. LOAD VALUES SHOWN ARE ALLOWABLE STRESS DESIGN (ASD). CAPACITIES DERIVED IN CONFORMANCE WITH ASCE 7-10, PIN 62 & ACI 318-11, Appendix D. Ωo=2.0
2. USE DETAIL A
3. LIGHT WEIGHT CONCRETE OR NORMAL WEIGHT CONCRETE.
4. f_{uta} MAX = 60 KSI

DUAL BLUE BANGER HANGER SDI INSERT IN LOW FLUTE SEISMIC BRACE CONNECTION IN METAL DECK SLAB

REGISTERED PROFESSIONAL ENGINEER MARCIN WASAZNIK S 6612 STRUCTURAL STATE OF CALIFORNIA

ISAT
A Division of Tomarco Contractor Specialties

International Seismic Application Technology
14848 Northam Street, La Mirada, CA 90638
877-999-4728 (Toll Free) 714-523-0845 (fax)
www.isatsb.com

Rev. 7
06/18/18

Page
D2.2B

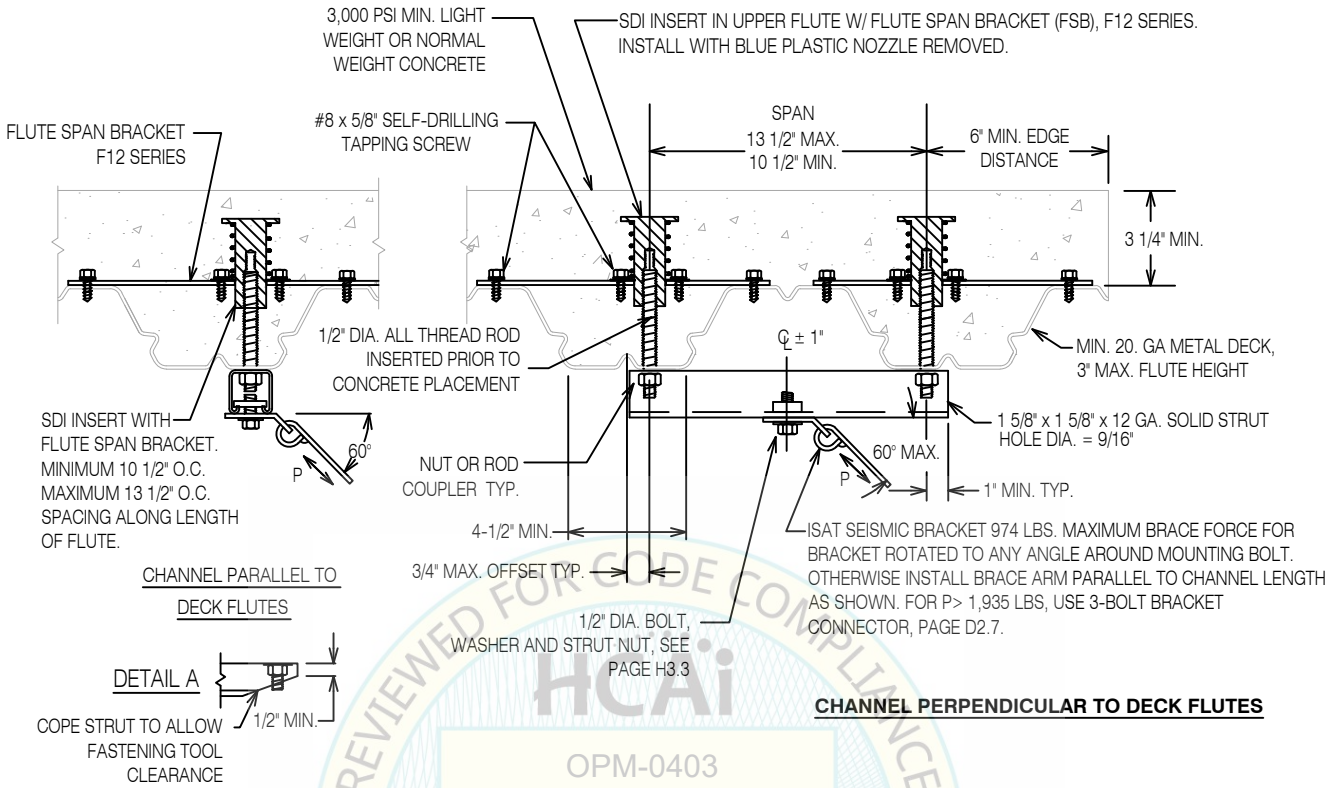

REVIEWED FOR CODE COMPLIANCE
HCAi
OPM-0403
BY: William Staehlin
01/26/2024
CALIFORNIA BUILDING CODE 2022

Blue Banger Hanger Steel Deck Insert (SDI)
Seismically Qualified for Anchorage In Cracked Concrete
Seismic Design Categories D, E and F
ICC Report No. ESR-3599 (November, 2017), Table [2]

Brace Anchorage Designation	Deck Insert Part No.	Span Inch	Maximum Brace Load (P) Lbs	Bracket Orientation	Minimum Insert Spacing [1] Inch	Minimum Concrete Strength
L9B3	SDI143812 or SDI381258	13 1/2	974	Rotated, 1-Bolt	5	3000
L12B3		10 1/2	1,252	Rotated, 1-Bolt	5	3000
L15B3		13 1/2	1,582	In-Line, 3-Bolt	5	3000
L19B3		10 1/2	1,992	In-Line, 3-Bolt	5	3000

1. LOAD VALUES SHOWN ARE ALLOWABLE STRESS DESIGN (ASD). CAPACITIES DERIVED IN CONFORMANCE WITH ASCE 7-10, PIN 62 & ACI 318-11, Appendix D. Ω_o=2.0
2. USE DETAIL A FOR 5/8" Ø ATR.
3. LIGHT WEIGHT CONCRETE OR NORMAL WEIGHT CONCRETE.
4. ALL THREAD ROD ASTM A1554, GRADE 55.

DUAL BLUE BANGER HANGER SDI INSERTS MOUNTED IN HIGH FLUTE WITH FLUTE SPAN BRACKET (FSB) SEISMIC BRACE CONNECTION

REGISTERED PROFESSIONAL ENGINEER MARCIN WASAZNIK S 6612 STRUCTURAL STATE OF CALIFORNIA

ISAT
A Division of Tomarco Contractor Specialties

International Seismic Application Technology
14848 Northam Street, La Mirada, CA 90638
877-999-4728 (Toll Free) 714-523-0845 (fax)
www.isatsb.com

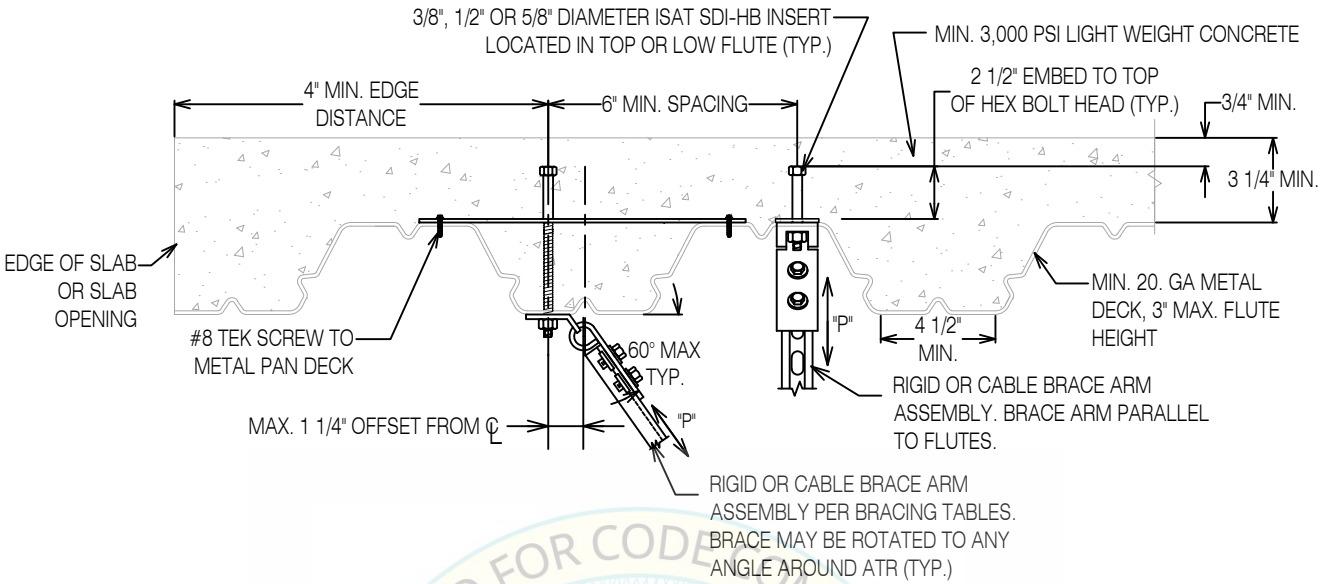

REVIEWED FOR CODE COMPLIANCE
HCAi
OPM-0403
BY: William Staehlin
DATE: 01-26-2024
CALIFORNIA BUILDING CODE

Seismically Qualified For Anchorage In Cracked Concrete
Seismic Design Categories D, E and F
ISAT SDI-HB, Minimum 3000 psi LWC

Brace Anchorage Designation	Anchor Diameter Inch	Max. Brace Load Lbs.	Min. Anchor Embed. Inch
1HBF3826	3/8	679	2 1/2
1HBF1226	1/2	813	2 1/2
1HBF5826	5/8	863	2 1/2

1. ALLOWABLE LOADS ARE FOR ANCHORS INSTALLED IN 3000 PSI LIGHTWEIGHT CONCRETE.
2. CALIFORNIA BUILDING CODE STATES: "ALL BOLTS SHALL BE ACCURATELY AND SECURELY SET PRIOR TO PLACEMENT OF CONCRETE. " FASTENER OR JAMB NUT MAY BE USED. TYPICAL FOR ALL APPLICATIONS.
3. MOUNTING HOLES ARE STANDARD. IF THE PLATE IS NOT MECHANICALLY SECURED TO THE DECK RIBS, A JAMB NUT IS REQUIRED TO PREVENT THE ANCHOR BOLT FROM LAYING OVER WHEN CONCRETE IS POURED.
4. STRUCTURAL ENGINEER OF RECORD SHALL VERIFY ADEQUACY OF THE BUILDING STRUCTURE FOR ACTUAL IMPOSED LOADS AS PROVIDED IN THE COMBINED TRADES POINT LOAD DRAWINGS.
5. MINIMUM SPACING BETWEEN INSERTS SHALL BE THE GREATER OF 3 TIMES THE EMBEDMENT DEPTH, OR 6" PARALLEL TO THE FLUTES.
6. LOAD VALUES SHOWN ARE ALLOWABLE STRESS DESIGN (ASD). CAPACITIES DERIVED IN CONFORMANCE WITH ASCE 7-10, PIN 62 & ACI 318-11, Appendix D. Ωo=2.0

SINGLE ISAT SDI-HB INSERT SEISMIC BRACE CONNECTION

REGISTERED PROFESSIONAL ENGINEER MARCIN WASAZNIK S 6612 STRUCTURAL STATE OF CALIFORNIA

ISAT
A Division of Tomarco Contractor Specialties
International Seismic Application Technology
14848 Northam Street, La Mirada, CA 90638
877-999-4728 (Toll Free) 714-523-0845 (fax)
www.isatsb.com

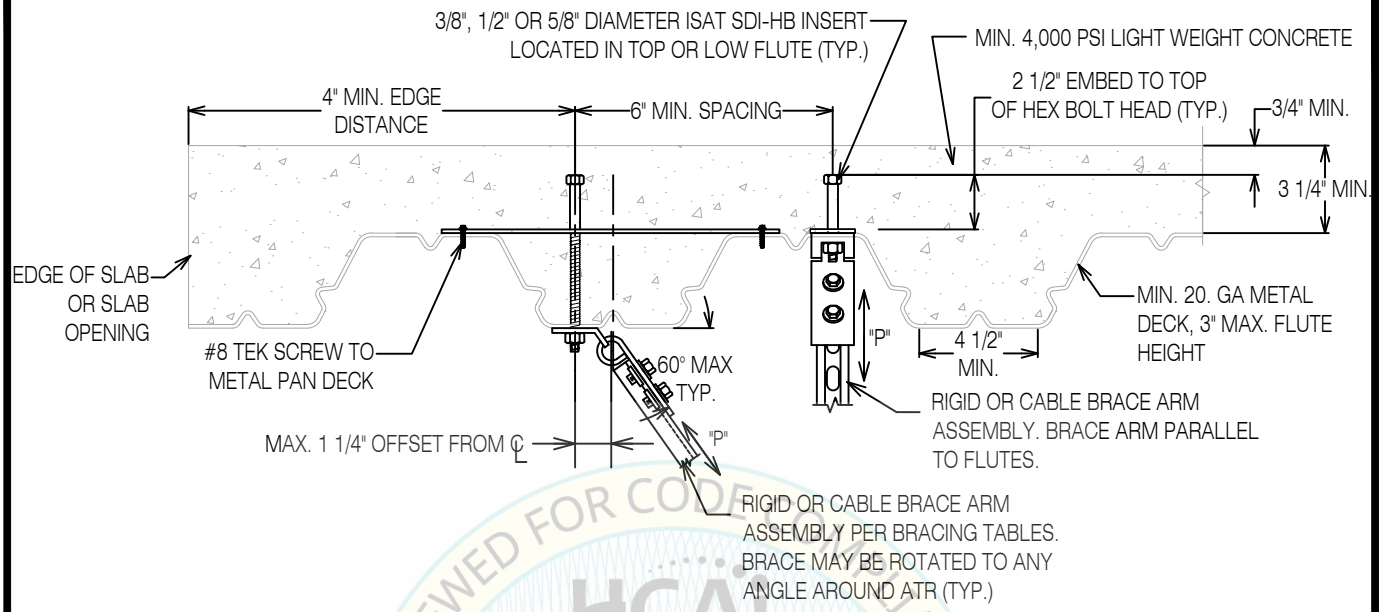

REVIEWED FOR CODE COMPLIANCE
HCAI
OPM-0403
BY: William Staehlin
DATE: 01-26-2024
CALIFORNIA BUILDING CODE

Seismically Qualified For Anchorage In Cracked Concrete
Seismic Design Categories D, E and F
ISAT SDI-HB, Minimum 4000 psi LWC

Brace Anchorage Designation	Anchor Diameter Inch	Max. Brace Load Lbs.	Min. Anchor Embed. Inch
1HBF3826	3/8	724	2 1/2
1HBF1226	1/2	905	2 1/2
1HBF5826	5/8	971	2 1/2

1. ALLOWABLE LOADS ARE FOR ANCHORS INSTALLED IN 3000 PSI LIGHTWEIGHT CONCRETE.
2. CALIFORNIA BUILDING CODE STATES: "ALL BOLTS SHALL BE ACCURATELY AND SECURELY SET PRIOR TO PLACEMENT OF CONCRETE. " FASTENER OR JAMB NUT MAY BE USED. TYPICAL FOR ALL APPLICATIONS.
3. MOUNTING HOLES ARE STANDARD. IF THE PLATE IS NOT MECHANICALLY SECURED TO THE DECK RIBS, A JAMB NUT IS REQUIRED TO PREVENT THE ANCHOR BOLT FROM LAYING OVER WHEN CONCRETE IS POURED.
4. STRUCTURAL ENGINEER OF RECORD SHALL VERIFY ADEQUACY OF THE BUILDING STRUCTURE FOR ACTUAL IMPOSED LOADS AS PROVIDED IN THE COMBINED TRADES POINT LOAD DRAWINGS.
5. MINIMUM SPACING BETWEEN INSERTS SHALL BE THE GREATER OF 3 TIMES THE EMBEDMENT DEPTH, OR 6" PARALLEL TO THE FLUTES.
6. LOAD VALUES SHOWN ARE ALLOWABLE STRESS DESIGN (ASD). CAPACITIES DERIVED IN CONFORMANCE WITH ASCE 7-10, PIN 62 & ACI 318-11, Appendix D. Ωo=2.0

SINGLE ISAT SDI-HB INSERT SEISMIC BRACE CONNECTION

REGISTERED PROFESSIONAL ENGINEER MARCIN WASAZNIK S 6612 STRUCTURAL STATE OF CALIFORNIA

ISAT
A Division of Tomarco Contractor Specialties
International Seismic Application Technology
14848 Northam Street, La Mirada, CA 90638
877-999-4728 (Toll Free) 714-523-0845 (fax)
www.isatsb.com

Rev. 3
06/18/18
Page
D2.1HB4

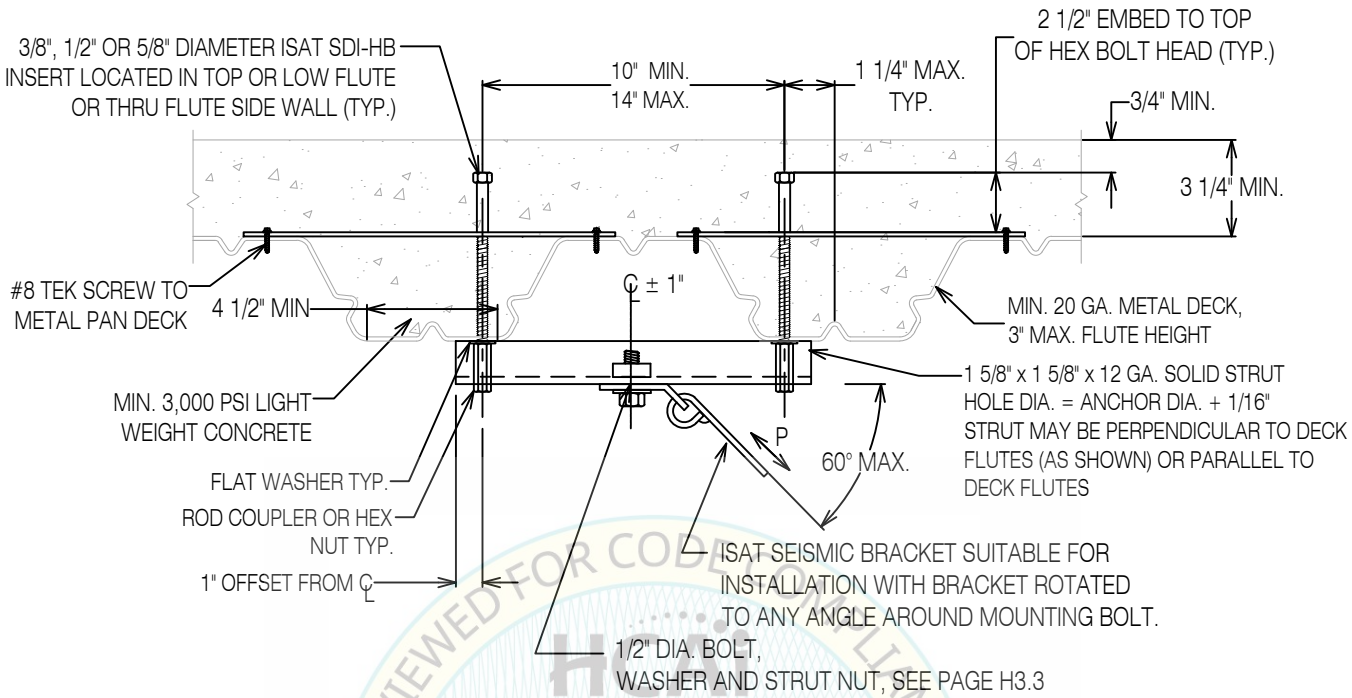

Seismically Qualified For Anchorage In Cracked Concrete
Seismic Design Categories D, E and F
ISAT SDI-HB, Minimum 3000 psi LWC

Brace Anchorage Designation	Anchor Diameter Inch	Max. Brace Load Lbs.	Min. Anchor Embed. Inch
1HBF3826S	3/8	1,213	2 1/2
1HBF1226S	1/2	1,270	2 1/2
1HBF5826S	5/8	1,270	2 1/2

1. ALLOWABLE LOADS ARE FOR ANCHORS INSTALLED IN 3000 PSI LIGHTWEIGHT CONCRETE.
2. CALIFORNIA BUILDING CODE STATES: "ALL BOLTS SHALL BE ACCURATELY AND SECURELY SET PRIOR TO PLACEMENT OF CONCRETE. " FASTENER OR JAMB NUT MAY BE USED. TYPICAL FOR ALL APPLICATIONS.
3. MOUNTING HOLES ARE STANDARD. IF THE PLATE IS NOT MECHANICALLY SECURED TO THE DECK RIBS, A JAMB NUT IS REQUIRED TO PREVENT THE ANCHOR BOLT FROM LAYING OVER WHEN CONCRETE IS POURED.
4. STRUCTURAL ENGINEER OF RECORD SHALL VERIFY ADEQUACY OF THE BUILDING STRUCTURE FOR ACTUAL IMPOSED LOADS AS PROVIDED IN THE COMBINED TRADES POINT LOAD DRAWINGS.
5. MINIMUM SPACING BETWEEN INSERTS SHALL BE THE GREATER OF 3 TIMES THE EMBEDMENT DEPTH, OR 6" PARALLEL TO THE FLUTES.
6. LOAD VALUES SHOWN ARE ALLOWABLE STRESS DESIGN (ASD). CAPACITIES DERIVED IN CONFORMANCE WITH ASCE 7-10, PIN 62 & ACI 318-11, Appendix D. Ωo=2.0

DUAL ISAT SDI-HB INSERT SEISMIC BRACE CONNECTION

REGISTERED PROFESSIONAL ENGINEER MARCIN WASAZNIK S 6612 STRUCTURAL STATE OF CALIFORNIA

ISAT
A Division of Tomarco Contractor Specialties
International Seismic Application Technology
14848 Northam Street, La Mirada, CA 90638
877-999-4728 (Toll Free) 714-523-0845 (fax)
www.isatsb.com

Rev. 7
06/18/18

Page
D2.2HB

REVIEWED FOR CODE COMPLIANCE
OPM-0403
BY: William Staehlin
DATE: 01-26-2024

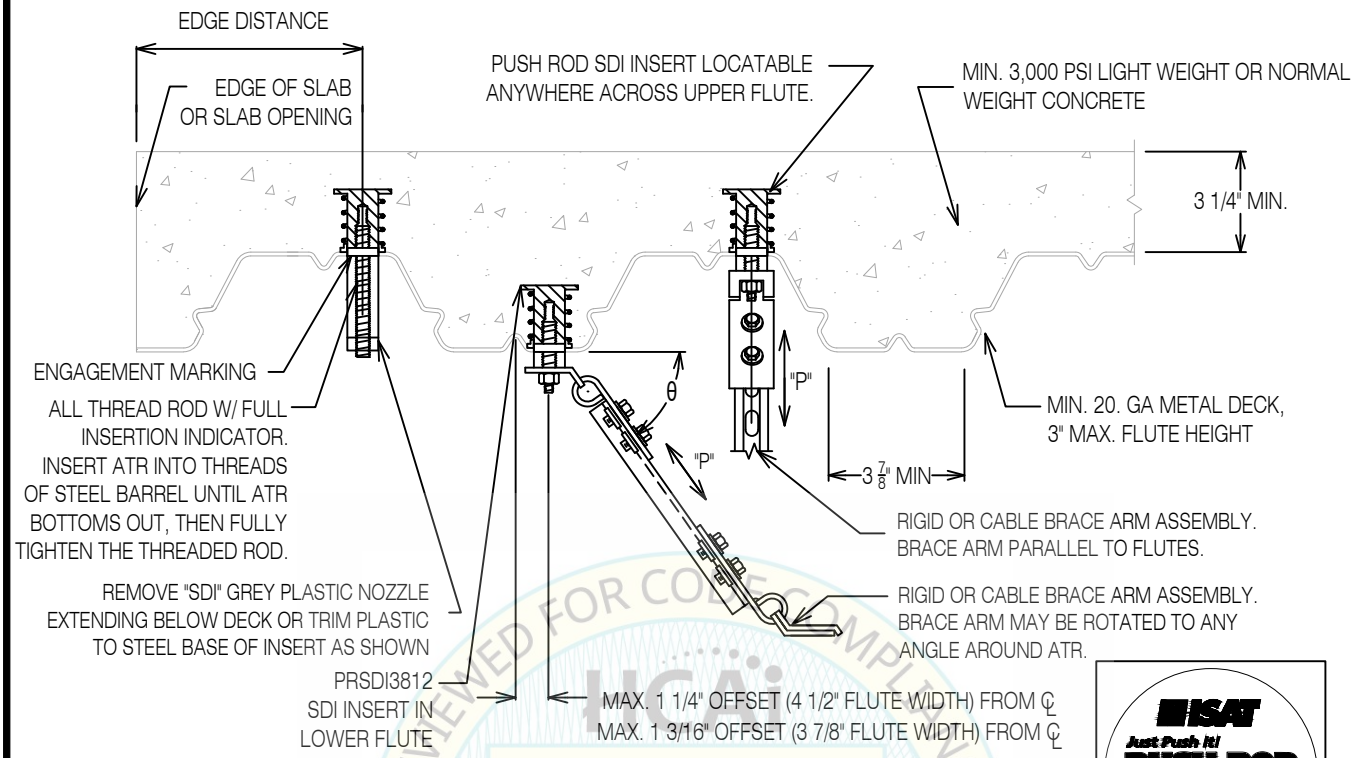

PR HEAD STAMP

REVIEWED FOR CODE COMPLIANCE
HCA
OPM-0403
BY: William Staehlin
DATE: 01-26-2024
CALIFORNIA BUILDING CODE, 2022

Push Rod Steel Deck (PRSDI) Insert
Seismically Qualified for Anchorage In Cracked Concrete
Seismic Design Categories D, E and F
ICC Report No. ESR-3599 (November 2017), Table 3A

Brace Anchorage Designation	Deck Insert & All Thread Part No.	All Thread Rod Dia. (ATR) Inch [4]	Flute Install. Location	Maximum Brace Reaction (P) At Minimum Concrete Strength				Nominal Insert Height Inch	Minimum Edge Distance Inch	Minimum[3] Spacing Inch
				3,000 psi LWC Lbs		4,000 psi LWC Lbs				
				30°≤ θ ≤ 36°	36°< θ ≤ 60°	30°≤ θ ≤ 36°	36°< θ ≤ 60°			
L4PRL3	PRSDI3812 & PRSDIR124	1/2	Lower	430	402	-	-	2	6	6
L7PRU3			Upper	837	797					
L4PRL4		1/2	Lower	-	-	463	443			
L8PRU4			Upper			897	871			

1. LOAD VALUES SHOWN ARE ALLOWABLE STRESS DESIGN (ASD). CAPACITIES DERIVED IN CONFORMANCE WITH ASCE 7-10, PIN 62 & ACI 318-11, Appendix D. Ωo=2.0
2. LIGHT WEIGHT CONCRETE OR NORMAL WEIGHT CONCRETE.
3. SPACING MEASURED ALONG LENGTH OF FLUTE. EDGE DISTANCE PERPENDICULAR TO DIRECTION SHOWN (END DISTANCE) SHALL BE 6 INCHES.
4. ISAT SUPPLIED ALL THREAD ROD REQUIRED WITH INTEGRAL "FULL INSERTION VISUAL INDICATOR".

PUSH ROD STEEL DECK (PRSDI) INSERT
SEISMIC BRACE CONNECTION

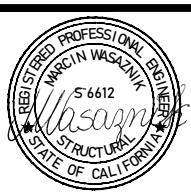

ISAT
A Division of Tomarco Contractor Specialties
International Seismic Application Technology
14848 Northam Street, La Mirada, CA 90638
877-999-4728 (Toll Free) 714-523-0845 (fax)
www.isatsb.com

Rev. 7
06/18/18
Page
D2.1PR

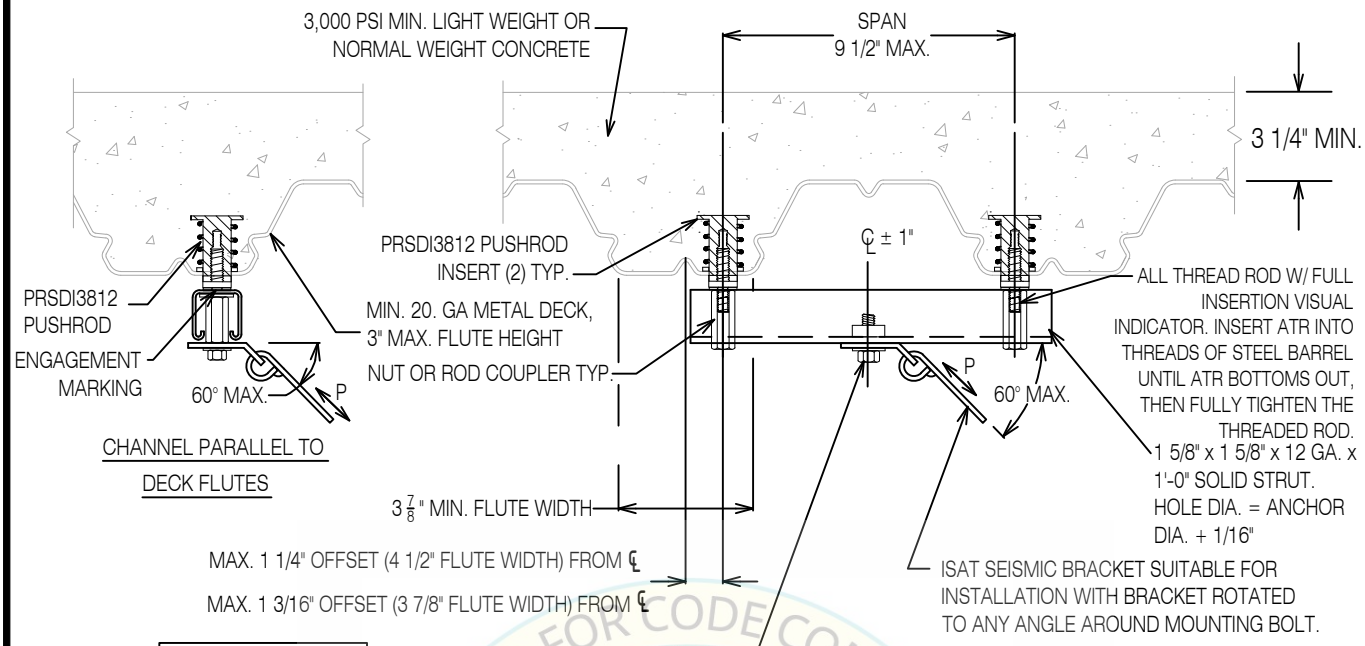

PR HEAD STAMP

REVIEWED FOR CODE COMPLIANCE
HCAi
OPM-0403
By: William Staehlin
DATE: 01/26/2024
CALIFORNIA BUILDING CODE 2019

Push Rod Steel Deck (PRSDI) Insert
Seismically Qualified for Anchorage In Cracked Concrete
Seismic Design Categories D, E and F
ICC Report No. ESR-3599 (November 2017), Table 3A

Brace Anchorage Designation	Deck Insert & All Thread Part No.	All Thread Rod Dia. (ATR) Inch [3]	Max. Brace Reaction (P) At Concrete Strength		Nominal Insert Height Inch	Minimum Edge Distance Inch	Minimum [4] Spacing Inch
			3ksi LWC Lbs	4ksi LWC Lbs			
L6PR3	PRSDI3812 & 2PRSDIR124	1/2	666	-	2	6	6
L7PR4			-	737			

1. LOAD VALUES SHOWN ARE ALLOWABLE STRESS DESIGN (ASD). CAPACITIES DERIVED IN CONFORMANCE WITH ASCE 7-10, PIN 62 & ACI 318-11, Appendix D. Ωo=2.0
2. LIGHT WEIGHT CONCRETE OR NORMAL WEIGHT CONCRETE.
3. ISAT SUPPLIED ALL THREAD ROD REQUIRED WITH INTEGRAL "FULL INSERTION VISUAL INDICATOR".
4. SPACING MEASURED ALONG LENGTH OF FLUTE. EDGE DISTANCE PERPENDICULAR TO DIRECTION SHOWN (END DISTANCE) SHALL BE 6 INCHES.

DUAL PUSH ROD STEEL DECK (PRSDI)INSERT CONNECTION IN METAL DECK SLAB

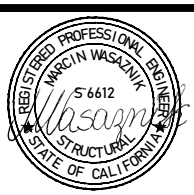

ISAT
A Division of Tomarco Contractor Specialties
International Seismic Application Technology
14848 Northam Street, La Mirada, CA 90638
877-999-4728 (Toll Free) 714-523-0845 (fax)
www.isatsb.com

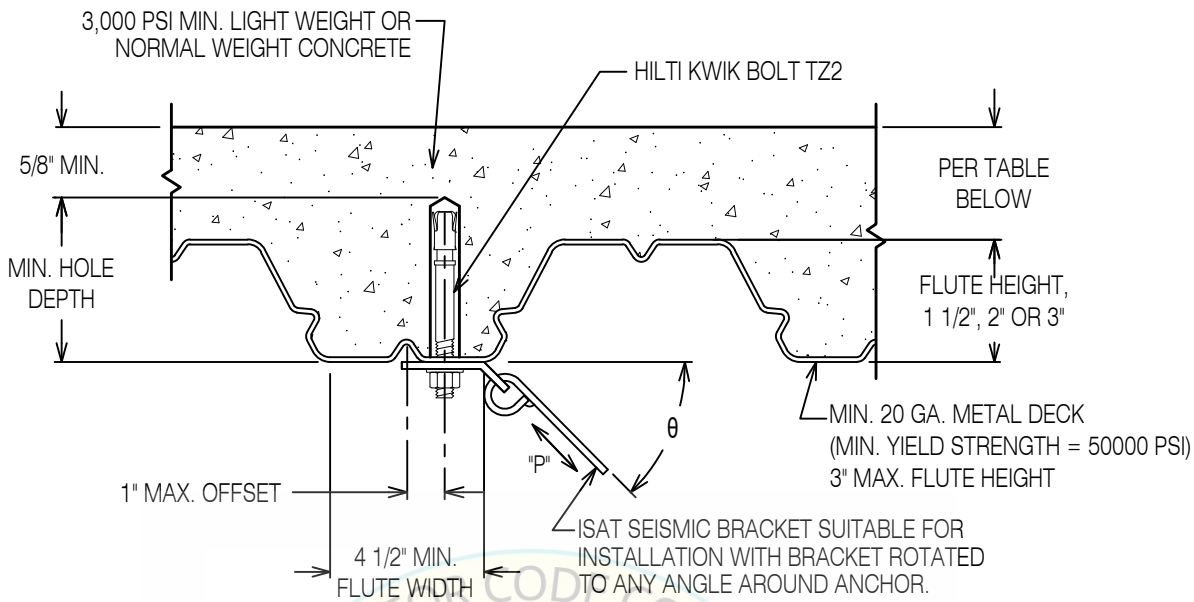

Hilti Kwik Bolt TZ2 (Carbon Steel) Concrete Expansion Anchor, Minimum 3000 psi LWC
Seismically Qualified For Anchorage In Cracked Concrete
Seismic Design Categories D, E and F
ICC Report No. ESR-4266 (Dated May 2023), Table 8 and Fig. 5A

Brace Anchorage Designation	Anchor Diameter Inch	Brace Angle 30° ≤ θ ≤ 36° Maximum Brace Load (P)[4] Lbs.	Brace Angle 36° < θ ≤ 60° Maximum Brace Load (P)[4] Lbs.	Minimum Hole Depth Inch	Minimum Effective Embed.[1] Inch	Installation Torque Ft-Lbs.	Edge Distance Inch	Minimum Anchor Spacing[2] Inch	Min. Concrete Thickness Above Top Flute (Inch)[3] Metal Deck Flute Height 1 1/2"	2"	3"
1TZ23815	3/8	462	447	2 3/4	2	30	4 1/2	6 3/4	2 1/2	2 1/2	2 1/2
1TZ21215	1/2	461	437	2 3/4	2	50	4 1/2	6 3/4	2 1/2	2 1/2	2 1/2
1TZ21222	1/2	794	725	4 1/4	3 1/4	50	6	9 3/4	3 3/8	2 7/8	2 1/2
1TZ25824	5/8	1,079	972	4 3/4	4	40	8 3/4	12	3 7/8	3 3/8	2 1/2

1. MINIMUM EFFECTIVE EMBEDMENT IS AFTER THE ANCHOR HAS BEEN SET.
2. SPACING MEASURED ALONG THE FLUTE.
3. BASED ON INSTALLATION IN LOW FLUTE.
4. LOAD VALUES SHOWN ARE ALLOWABLE STRESS DESIGN (ASD). CAPACITIES DERIVED IN CONFORMANCE WITH ASCE 7-16 AND ACI 318. Ω_o=2.0
5. MAX BRACE LOAD "P" MAY BE LIMITED BY CAPACITY OF BRACE ATTACHMENT.

REVIEWED FOR CODE COMPLIANCE
HCAi
OPM-0403
BY: William Staehlin
DATE: 01-26-2024
CALIFORNIA BUILDING CODE, 2022

SINGLE ANCHOR HILTI KWIK BOLT TZ2
SEISMIC BRACE CONNECTION IN METAL DECK SLAB

REGISTERED PROFESSIONAL ENGINEER
MARCIN WASAZNIK
S 6612
STRUCTURAL
STATE OF CALIFORNIA

ISAT
A Division of Tomarco Contractor Specialties
International Seismic Application Technology
14848 Northam Street, La Mirada, CA 90638
877-999-4728 (Toll Free) 714-523-0845 (fax)
www.isatsb.com

Rev. 2
11/21/23
Page
D2.1TZ23

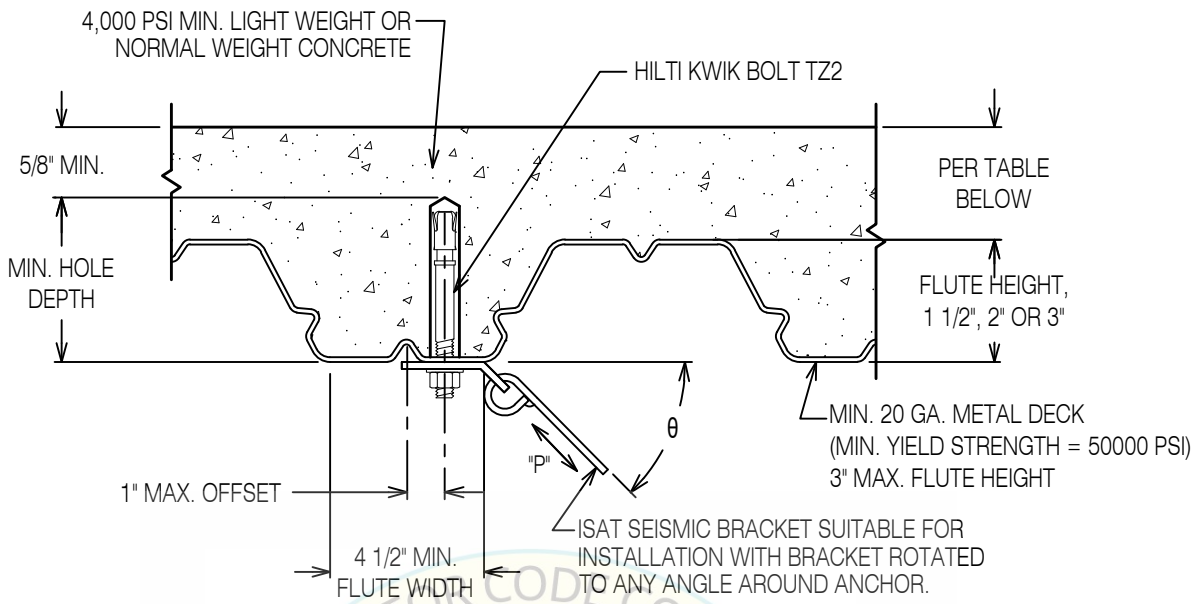

Hilti Kwik Bolt TZ2 (Carbon Steel) Concrete Expansion Anchor, Minimum 4000 psi LWC
Seismically Qualified For Anchorage In Cracked Concrete
Seismic Design Categories D, E and F
ICC Report No. ESR-4266 (Dated May 2023), Table 8 and Fig. 5A

Brace Anchorage Designation	Anchor Diameter Inch	Brace Angle 30°≤ θ ≤ 36° Maximum Brace Load (P)[4] Lbs.	Brace Angle 36°< θ ≤ 60° Maximum Brace Load (P)[4] Lbs.	Minimum Hole Depth Inch	Minimum Effective Embed.[1] Inch	Installation Torque Ft-Lbs.	Edge Distance Inch	Minimum Anchor Spacing[2] Inch	Min. Concrete Thickness Above Top Flute (Inch)[3] Metal Deck Flute Height 1 1/2"	2"	3"
1TZ23815	3/8	491	482	2 3/4	2	30	4 1/2	6 3/4	2 1/2	2 1/2	2 1/2
1TZ21215	1/2	495	478	2 3/4	2	50	4 1/2	6 3/4	2 1/2	2 1/2	2 1/2
1TZ21222	1/2	846	789	4 1/4	3 1/4	50	6	9 3/4	3 3/8	2 7/8	2 1/2
1TZ25824	5/8	1,169	1,082	4 3/4	4	40	8 3/4	12	3 7/8	3 3/8	2 1/2

1. MINIMUM EFFECTIVE EMBEDMENT IS AFTER THE ANCHOR HAS BEEN SET.
2. SPACING MEASURED ALONG THE FLUTE.
3. BASED ON INSTALLATION IN LOW FLUTE.
4. LOAD VALUES SHOWN ARE ALLOWABLE STRESS DESIGN (ASD). CAPACITIES DERIVED IN CONFORMANCE WITH ASCE 7-16 AND ACI 318. Ω_o=2.0
5. MAX BRACE LOAD "P" MAY BE LIMITED BY CAPACITY OF BRACE ATTACHMENT.

REVIEWED FOR CODE COMPLIANCE
HCAI
OPM-0403
By: William Staehlin
DATE: 01-26-2024
CALIFORNIA BUILDING CODE 2023

SINGLE ANCHOR HILTI KWIK BOLT TZ2
SEISMIC BRACE CONNECTION IN METAL DECK SLAB

REGISTERED PROFESSIONAL ENGINEER
MARCIN WASAZNIK
S 6612
STRUCTURAL
STATE OF CALIFORNIA

ISAT
A Division of Tomarco Contractor Specialties

International Seismic Application Technology
14848 Northam Street, La Mirada, CA 90638
877-999-4728 (Toll Free) 714-523-0845 (fax)
www.isatsb.com

Rev. 2
11/21/23

Page
D2.1TZ24

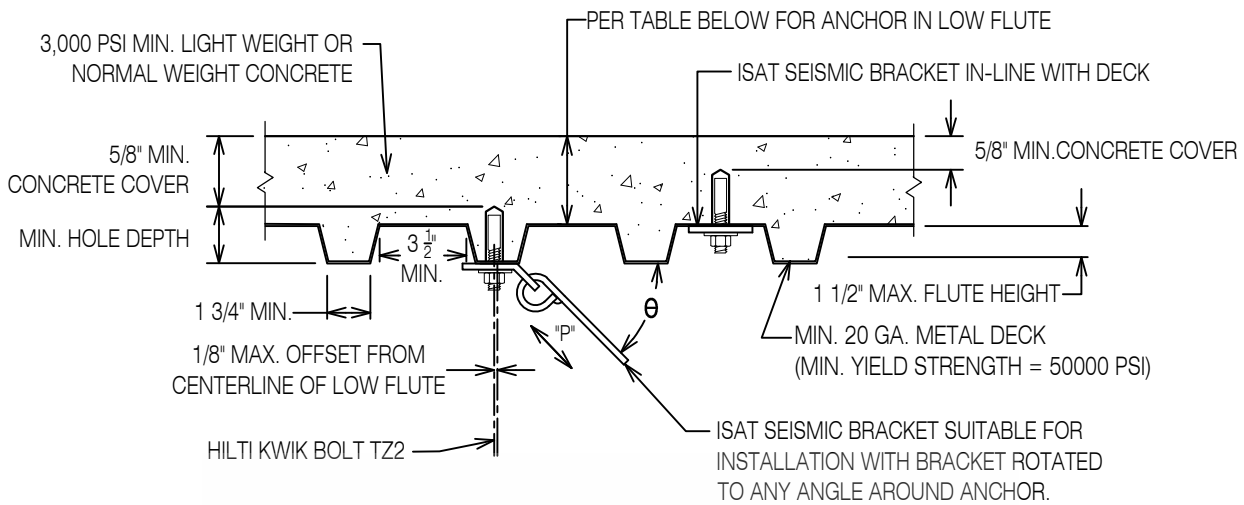

Hilti Kwik Bolt TZ2 (Carbon Steel) Concrete Expansion Anchor, Minimum 3000 psi LWC
Seismically Qualified For an Anchorage In Cracked Concrete
Seismic Design Categories D, E and F
ICC Report No. ESR-4266 (Dated May 2023) Table 8 and Fig. 5C

Brace Anchorage Designation	Anchor Diameter Inch	Brace Angle 30°≤ θ ≤ 36° Maximum Brace Load (P)[4] Lbs.	Brace Angle 36°< θ ≤ 60° Maximum Brace Load (P)[4] Lbs.	Minimum Hole Depth Inch	Minimum Effective Embed. [1] Inch	Installation Torque Ft-Lbs.	Edge Distance Inch	Minimum Anchor Spacing [2] Inch	Minimum Concrete Thickness[3] Metal Deck Flute Height 1 1/2"
Minimum Concrete Strength = 3,000 psi									
1TZ23815	3/8	484	450	2 3/4	2	30	4 1/2	6	2 1/4
1TZ21215	1/2	426	357	2 3/4	2	50	4 1/2	6	2 1/4
1TZ21222	1/2	516	443	4 1/4	3 1/4	50	6	9 3/4	3 3/8
1TZ25819	5/8	516	443	3 3/4	2 3/4	40	6	8 1/4	3 1/4
Minimum Concrete Strength = 4,000 psi									
1TZ23815	3/8	521	497	2 3/4	2	30	4 1/2	6	2 1/4
1TZ21215	1/2	469	401	2 3/4	2	50	4 1/2	6	2 1/4
1TZ21222	1/2	564	496	4 1/4	3 1/4	50	6	9 3/4	3 3/8
1TZ25819	5/8	564	496	3 3/4	2 3/4	40	6	8 1/4	3 1/4

1. MINIMUM EFFECTIVE EMBEDMENT IS AFTER THE ANCHOR HAS BEEN SET.
2. SPACING MEASURED ALONG THE FLUTE.
3. MINIMUM CONCRETE THICKNESS ABOVE TOP FLUTE BASED ON INSTALLATION IN LOWER FLUTE.
4. LOAD VALUES SHOWN ARE ALLOWABLE STRESS DESIGN (ASD). CAPACITIES DERIVED IN CONFORMANCE WITH ASCE 7-16 AND ACI 318. Ω_o=2.0

SINGLE ANCHOR HILTI KWIK BOLT TZ2 FOR SEISMIC BRACE CONNECTION IN 1.5" METAL DECK SLAB

REGISTERED PROFESSIONAL ENGINEER MARCIN WASAZNIK S-6612 STRUCTURAL STATE OF CALIFORNIA

ISAT
A Division of Tomarco Contractor Specialties
International Seismic Application Technology
14848 Northam Street, La Mirada, CA 90638
877-999-4728 (Toll Free) 714-523-0845 (fax)
www.isatsb.com

Rev. 2
11/21/23
Page
D2.1TZ2B

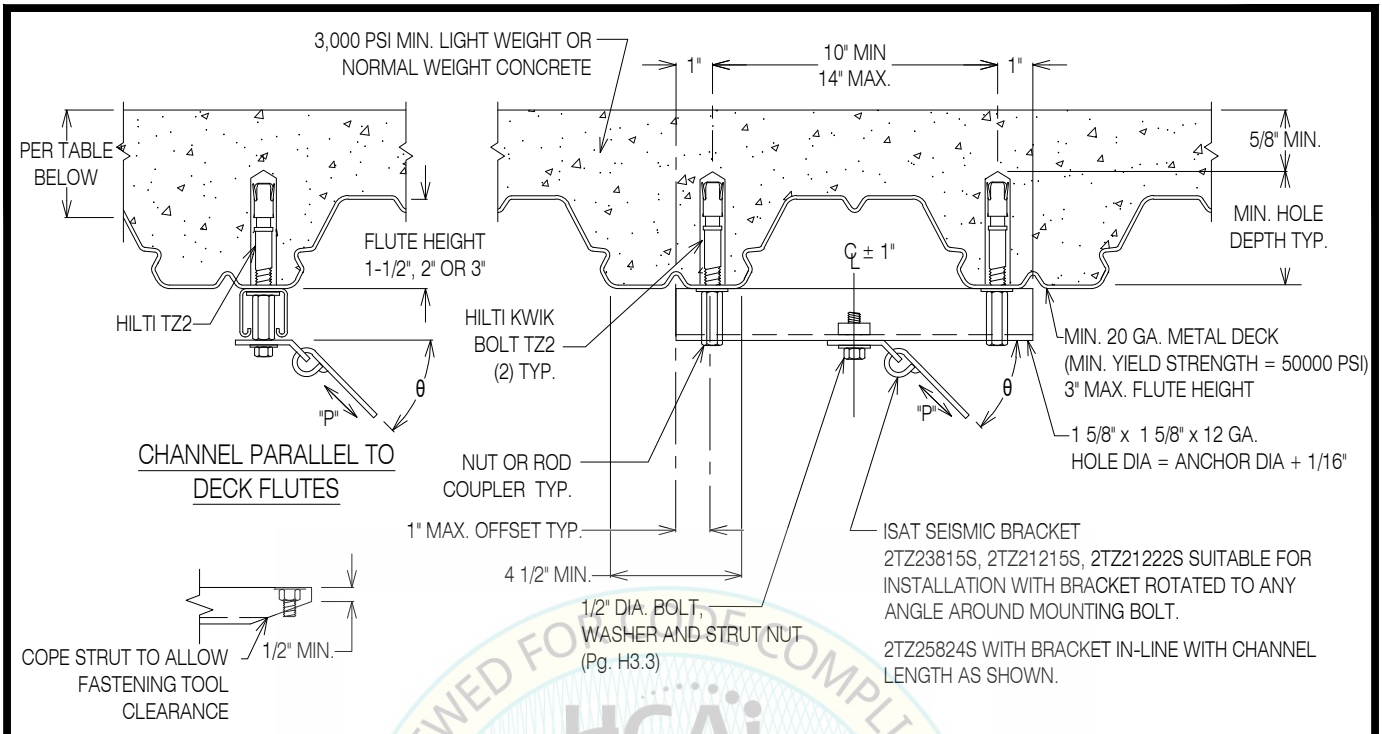

REVIEWED FOR CODE COMPLIANCE
HCAi
OPM-0403
BY: William Staehlin
DATE: 01-26-2024
CALIFORNIA BUILDING CODE 2022

Hilti Kwik Bolt TZ2 (Carbon Steel) Concrete Expansion Anchor, Minimum 3000 psi LWC
Seismically Qualified For Anchorage In Cracked Concrete
Seismic Design Categories D, E and F
ICC Report No. ESR-4266 (Dated May 2023), Table 8 and Fig. 5A

Brace Anchorage Designation	Anchor Diameter Inch	Brace Angle 30°≤ θ ≤ 36° Maximum Brace Load (P) Lbs.	Brace Angle 36°< θ ≤ 60° Maximum Brace Load (P) Lbs.	Minimum Hole Depth Inch	Minimum Effective Embed. [1] Inch	Installation Torque Ft-Lbs.	Edge Distance Inch	Minimum Anchor Spacing Inch	Min. Concrete Thickness Above Top Flute (Inch) [4] Metal Deck Flute Height 1 1/2"	2"	3"
2TZ23815S	3/8	770	748	2 3/4	2	30	4 1/2	6 3/4	2 1/2	2 1/2	2 1/2
2TZ21215S	1/2	768	731	2 3/4	2	50	4 1/2	6 3/4	2 1/2	2 1/2	2 1/2
2TZ21222S	1/2	939	939	4 1/4	3 1/4	50	6	9 3/4	3 3/8	2 7/8	2 1/2
2TZ25824S	5/8[2]	1,529	1,529	4 3/4	4	40	8 3/4	12	3 7/8	3 3/8	2 1/2

1. MINIMUM EFFECTIVE EMBEDMENT IS AFTER THE ANCHOR HAS BEEN SET.
2. USE DETAIL A.
3. LOAD VALUES SHOWN ARE ALLOWABLE STRESS DESIGN (ASD). CAPACITIES DERIVED IN CONFORMANCE WITH ASCE 7-16 AND ACI 318. Ω_o=2.0
4. BASED ON INSTALLATION IN LOWER FLUTE.
5. MAX BRACE LOAD "P" MAY BE LIMITED BY CAPACITY OF BRACE ATTACHMENT, STRUT NUT CONNECTION, OR BRACE MEMBER.

DUAL ANCHOR HILTI KWIK BOLT TZ2 WITH STRUT SEISMIC BRACE CONNECTION IN METAL DECK SLAB

REGISTERED PROFESSIONAL ENGINEER MARCIN WASAZNIK S-6612 STRUCTURAL STATE OF CALIFORNIA

ISAT
A Division of Tomarco Contractor Specialties
International Seismic Application Technology
14848 Northam Street, La Mirada, CA 90638
877-999-4728 (Toll Free) 714-523-0845 (fax)
www.isatsb.com

Rev. 2
11/21/23

Page
D2.2TZ2

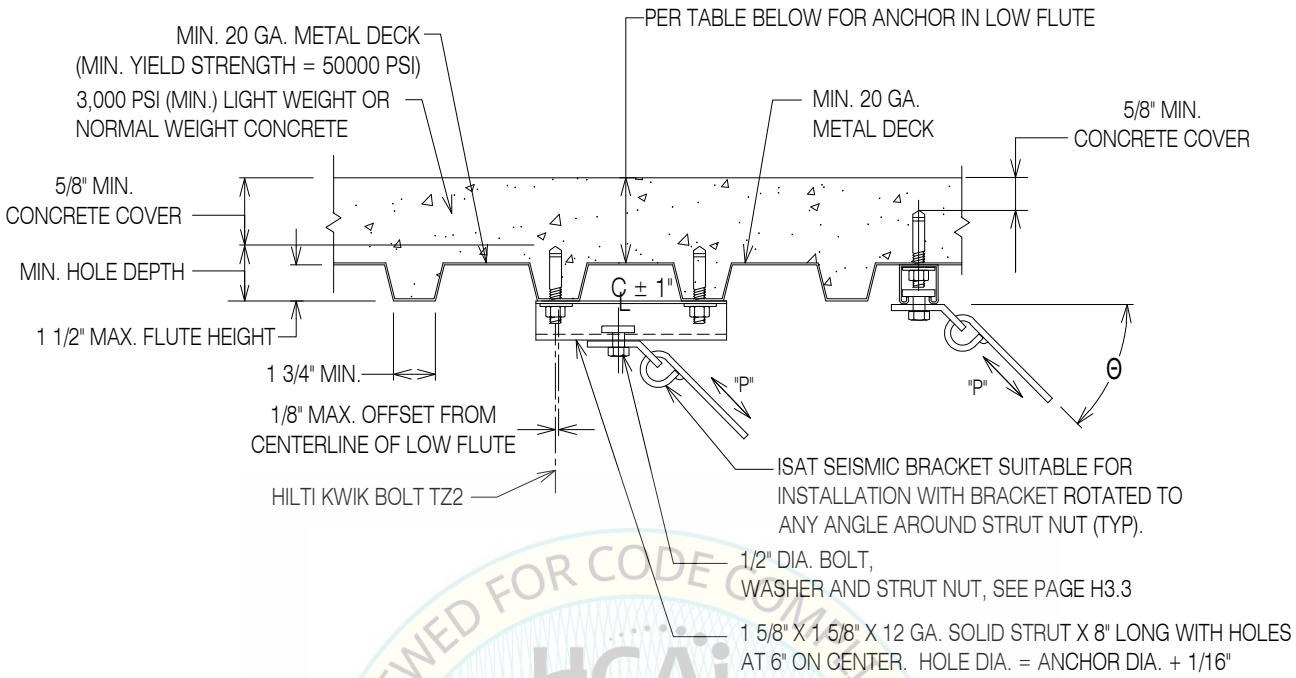

REVIEWED FOR CODE COMPLIANCE
HCAi
OPM-0403
BY: William Staehlin
DATE: 01-26-2024
CALIFORNIA BUILDING CODE 2022

Hilti Kwik Bolt TZ2 (Carbon Steel) Concrete Expansion Anchor, Minimum 3000 psi LWC
Seismically Qualified For Anchorage In Cracked Concrete
Seismic Design Categories D, E and F
ICC Report No. ESR-4266 (Dated May 2023) Table 8 and Fig. 5C

Brace Anchorage Designation	Anchor Quantity	Anchor Diameter Inch	Maximum Brace Load (P) Lbs.	Minimum Hole Depth [1] Inch	Minimum Effective Embed. [2] Inch	Installation Torque Ft-Lbs.	Edge Distance Inch	Minimum Anchor Spacing Inch
Minimum Concrete Strength = 3000 psi (36°< θ ≤ 60°)								
2TZ23815S	2	3/8	676	2 3/4	2	30	4 1/2	6
2TZ21215S	2	1/2	535	2 3/4	2	50	4 1/2	6
Minimum Concrete Strength = 4000 psi (36°< θ ≤ 60°)								
2TZ23815S	2	3/8	749	2 3/4	2	30	4 1/2	6
2TZ21215S	2	1/2	602	2 3/4	2	50	4 1/2	6

1. MINIMUM HOLE DEPTH IS TO BE VERIFIED BY THE INSPECTOR.
2. MINIMUM EFFECTIVE EMBEDMENT IS AFTER THE ANCHOR HAS BEEN SET.
3. REFER TO PAGE D2.1TZB FOR MINIMUM CONCRETE THICKNESS ABOVE TOP FLUTE.
4. LOAD VALUES SHOWN ARE ALLOWABLE STRESS DESIGN (ASD). CAPACITIES DERIVED IN CONFORMANCE WITH ASCE 7-16 AND ACI 318. Ωo=2.0
5. MAX BRACE LOAD "P" MAT BE LIMITED BY CAPACITY OF BRACE ATTACHMENT, STRUT NUT CONNECTION, OR BRACE MEMBER.

DUAL ANCHOR HILTI KWIK BOLT TZ2
FOR SEISMIC BRACE CONNECTION IN 1.5" METAL DECK SLAB

REGISTERED PROFESSIONAL ENGINEER
MARCIN WASAZNIK
S 6612
STRUCTURAL
STATE OF CALIFORNIA

ISAT
A Division of Tomarco Contractor Specialties
International Seismic Application Technology
14848 Northam Street, La Mirada, CA 90638
877-999-4728 (Toll Free) 714-523-0845 (fax)
www.isatsb.com

Rev. 2
11/21/23
Page
D2.2TZ2B

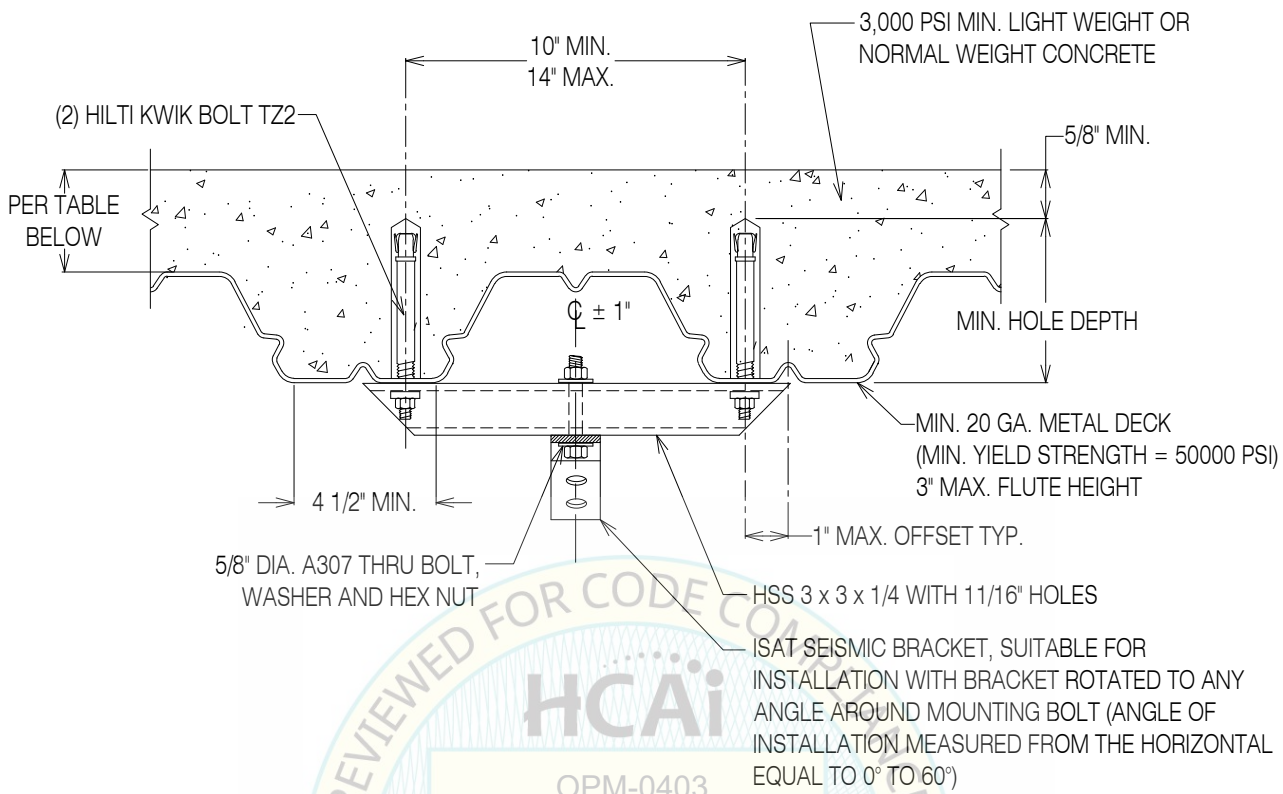

REVIEWED FOR CODE COMPLIANCE
HCAi
OPM-0403
BY: William Staehlin
DATE: 01/26/2024
CALIFORNIA BUILDING CODE, 2022

Hilti Kwik Bolt TZ2 (Carbon Steel) Concrete Expansion Anchor, Minimum 3000 psi LWC
Seismically Qualified For Anchorage in Cracked Concrete
Seismic Design Categories D, E and F
ICC Report No. ESR-4266 (Dated May 2023), Table 8 and Fig. 5A

Brace Anchorage Designation	Anchor Diameter Inch	Maximum Brace Load (P) Lbs.	Minimum Hole Depth Inch	Minimum Effective Embed. [1] Inch	Installation Torque Ft-Lbs.	Edge Distance Inch	Minimum Anchor Spacing Inch	Min. Concrete Thickness Above Top Flute (Inch) [3] Metal Deck Flute Height		
								1 1/2"	2"	3"
2TZ25824H	5/8	1548	4 3/4	4	40	8 3/4	10	3 7/8	3 3/8	2 1/2

1. MINIMUM EFFECTIVE EMBEDMENT IS AFTER THE ANCHOR HAS BEEN SET.
2. LOAD VALUES SHOWN ARE ALLOWABLE STRESS DESIGN (ASD). CAPACITIES DERIVED IN CONFORMANCE WITH ASCE 7-16 AND ACI 318. Ωo=2.0
3. BASED ON INSTALLATION IN LOWER FLUTE.
4. MAX BRACE LOAD "P" MAY BE LIMITED BY CAPACITY OF BRACE ATTACHMENT, STRUT NUT CONNECTION, OR BRACE MEMBER.

DUAL ANCHOR HILTI TZ2 WITH TUBE SEISMIC BRACE CONNECTION

REGISTERED PROFESSIONAL ENGINEER
MARCIN WASAZNIK
S-6612
STRUCTURAL
STATE OF CALIFORNIA

ISAT
A Division of Tomarco Contractor Specialties
International Seismic Application Technology
14848 Northam Street, La Mirada, CA 90638
877-999-4728 (Toll Free) 714-523-0845 (fax)
www.isatsb.com

Rev. 2
11/21/23
Page
D2.3TZ2

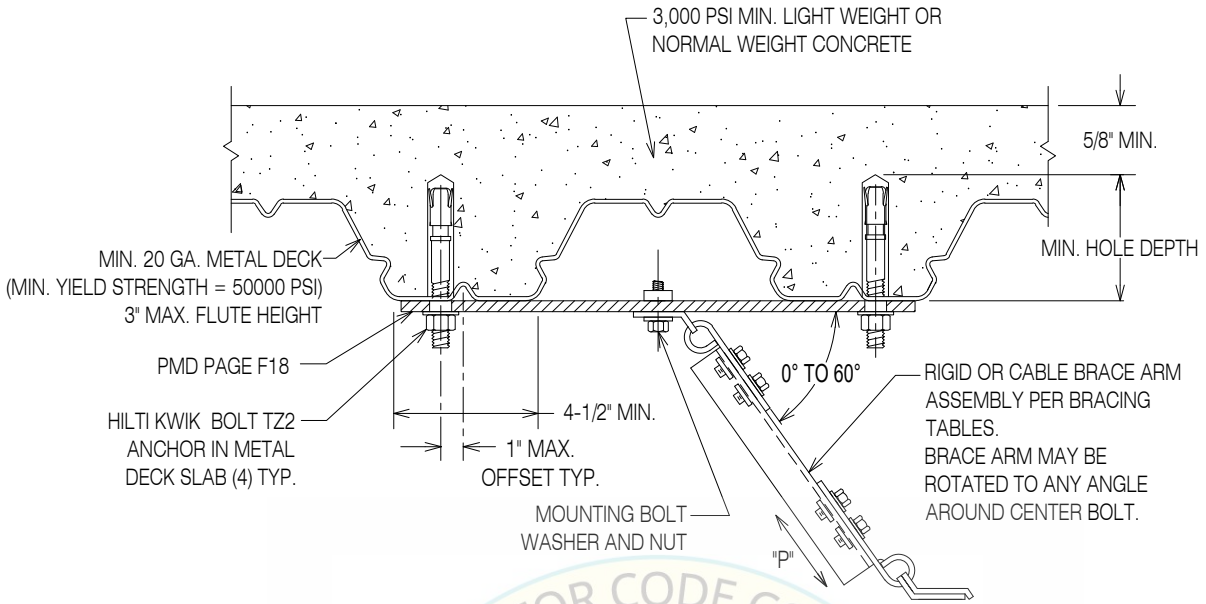

Hilti Kwik Bolt TZ2 (Carbon Steel) Concrete Expansion Anchor, Minimum 3000 psi LWC
Seismically Qualified For Anchorage In Cracked Concrete
Seismic Design Categories D, E and F
ICC Report No. ESR-4266 (Dated May 2023), Table 8 and Fig. 5A

Brace Anchorage Designation	Anchor Diameter Inch	Maximum Brace Load (P) Lbs.	Minimum Hole Depth Inch	Minimum Effective Embed. [1] Inch	Installation Torque Ft-Lbs.	Edge Distance Inch	Plate Number Page F18	Mounting Bolt Diameter Inch
4TZ23815P	3/8	1,695	2 3/4	2	30	4 1/2	D243	1/2
4TZ21222P	1/2	2,811	4 1/4	3 1/4	50	6	D245	5/8
4TZ25824	5/8	3,790	4 3/4	4	40	8 3/4	D255	5/8

1. MINIMUM EFFECTIVE EMBEDMENT IS AFTER THE ANCHOR HAS BEEN SET.
2. LOAD VALUES SHOWN ARE ALLOWABLE STRESS DESIGN (ASD). CAPACITIES DERIVED IN CONFORMANCE WITH ASCE 7-16 AND ACI 318. Ωo=2.0
3. REFER TO PAGE D2.1TZ23 FOR MINIMUM CONCRETE THICKNESS ABOVE TOP FLUTE.
4. MAX BRACE LOAD "P" MAY BE LIMITED BY CAPACITY OF BRACE ATTACHMENT, STRUT NUT CONNECTION, OR BRACE MEMBER.

REVIEWED FOR CODE COMPLIANCE
OPM-0403
BY: William Staehlin
DATE: 01-26-2024
CALIFORNIA BUILDING CODE 2022

4-ANCHOR HILTI KWIK BOLT TZ2
PLATE IN METAL DECK SLAB (PMD)

REGISTERED PROFESSIONAL ENGINEER
MARCIN WASAZNIK
S-6612
STRUCTURAL
STATE OF CALIFORNIA

ISAT
A Division of Tomarco Contractor Specialties

International Seismic Application Technology
14848 Northam Street, La Mirada, CA 90638
877-999-4728 (Toll Free) 714-523-0845 (fax)
www.isatsb.com

Rev. 2
11/21/23

Page
D2.4TZ2

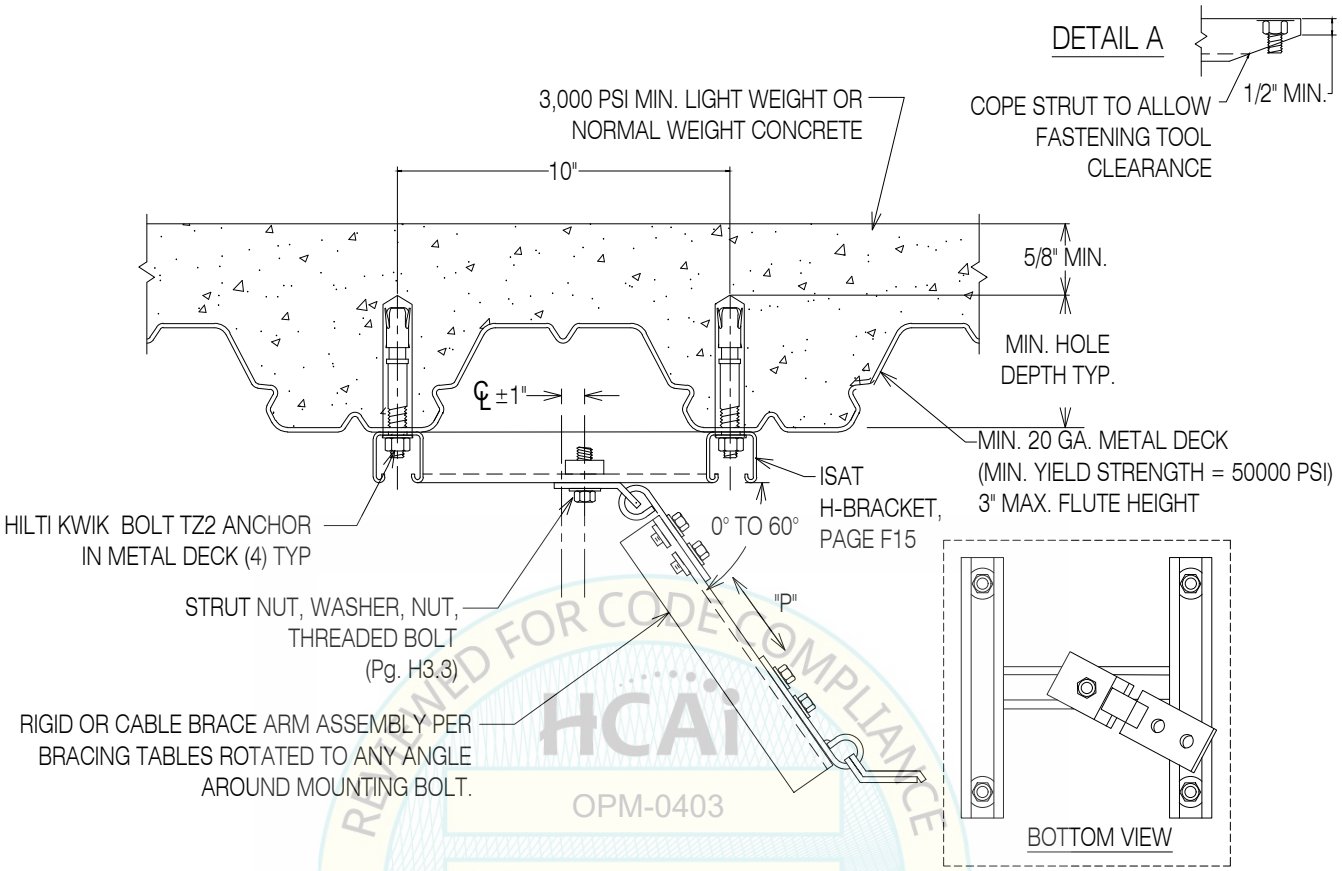

REVIEWED FOR CODE COMPLIANCE
HCAi
OPM-0403
BY: William Staehlin
DATE: 01/26/2024
CALIFORNIA BUILDING CODE, 2022

Hilti Kwik Bolt TZ2 (Carbon Steel) Concrete Expansion Anchor, Minimum 3000 psi LWC
Seismically Qualified For Anchorage In Cracked Concrete
Seismic Design Categories D, E and F
ICC Report No. ESR-4266 (Dated May 2023), Table 8 and Fig. 5A

Brace Anchorage Designation	Anchor Diameter Inch	Maximum Brace Load (P) Lbs.	Minimum Hole Depth Inch	Minimum Effective Embed. [1] Inch	Installation Torque Ft-Lbs.	Minimum Edge Distance Inch	H-Bracket Number Pg. F15	Mounting Bolt Diameter Inch
4TZ23815F	3/8	1,569	2 3/4	2	30	4 1/2	H13.1	1/2
4TZ21215F	1/2	1,569	2 3/4	2	50	4 1/2	H13.2	
4TZ21222F	1/2	1,569	4 1/4	3 1/4	50	6	H13.2	
4TZ25824F	5/8	1,569	4 3/4	4	40	8 3/4	H13.3	

1. MINIMUM EFFECTIVE EMBEDMENT IS AFTER THE ANCHOR HAS BEEN SET.
2. LOAD VALUES SHOWN ARE ALLOWABLE STRESS DESIGN (ASD). CAPACITIES DERIVED IN CONFORMANCE WITH ASCE 7-16 AND ACI 318. Ωo=2.0
3. REFER TO PAGE D2.1TZ23 FOR MINIMUM CONCRETE THICKNESS ABOVE TOP FLUTE.

4-ANCHOR HILTI KWIK BOLT TZ2
H-BRACKET ATTACHMENT TO METAL DECK

REGISTERED PROFESSIONAL ENGINEER MARCIN WASAZNIK S-6612 STRUCTURAL STATE OF CALIFORNIA

ISAT
A Division of Tomarco Contractor Specialties
International Seismic Application Technology
14848 Northam Street, La Mirada, CA 90638
877-999-4728 (Toll Free) 714-523-0845 (fax)
www.isatsb.com

Rev. 2
11/21/23
Page
D2.4.1TZ2

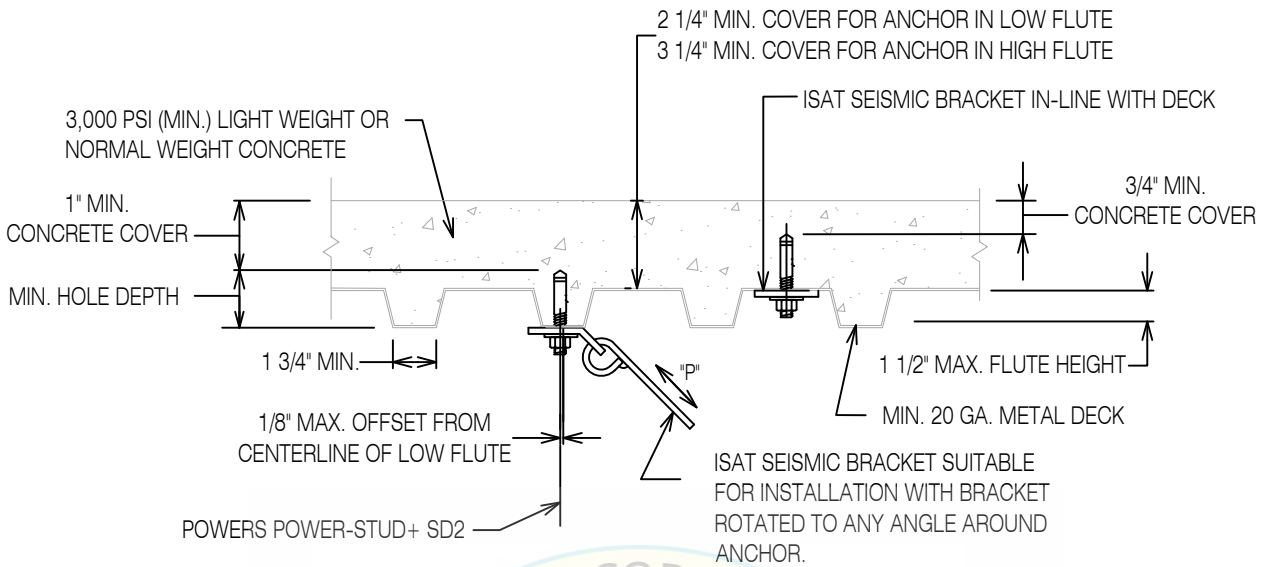

REVIEWED FOR CODE COMPLIANCE
HCAi
OPM-0403
BY William Staehlin
DATE: 01-26-2024
CALIFORNIA BUILDING CODE, 2022

Seismically Qualified For Anchorage In Cracked Concrete
Seismic Design Categories D, E and F
Powers Power-Stud+ SD2 Concrete Expansion Anchor, Minimum 3000 psi LWC
ICC Report No. ESR-2502 (Dated May 2017), Table 1, Table 5 and Fig. 5C.

Brace Anchorage Designation	Anchor Diameter Inch	Brace Angle 30°≤ θ ≤ 36° Maximum Brace Load (P)[4] Lbs.	Brace Angle 36°< θ ≤ 60° Maximum Brace Load (P)[4] Lbs.	Minimum Hole Depth Inch	Minimum Effective Embed.[1] Inch	Installation Torque Ft-Lbs.	Edge Distance Inch	Minimum Anchor Spacing[2] Inch	Minimum Concrete Thickness[5] Metal Deck Flute Height 1 1/2"
Minimum Concrete Strength = 3,000 psi									
1SD23812	3/8	304	275	2 5/8	2	20	4 1/2	6	2 1/4
1SD21215	1/2	404	342	2 3/4	2	40	4 1/2	6	2 1/4
Minimum Concrete Strength = 4,000 psi									
1SD23812	3/8	321	296	2 5/8	2	20	4 1/2	6	2 1/4
1SD21215	1/2	443	384	2 3/4	2	40	4 1/2	6	2 1/4

1. MINIMUM EFFECTIVE EMBEDMENT IS AFTER THE ANCHOR HAS BEEN SET.
2. SPACING MEASURED ALONG THE FLUTE.
3. LOWER FLUTE INSTALLATION ONLY.
4. LOAD VALUES SHOWN ARE ALLOWABLE STRESS DESIGN (ASD). CAPACITIES DERIVED IN CONFORMANCE WITH ASCE 7-10, PIN 62 & ACI 318-11, Appendix D. Ωo=2.0
5. BASED ON INSTALLATION IN LOWER FLUTE.

SINGLE ANCHOR POWERS POWER-STUD+ SD2 FOR SEISMIC BRACE CONNECTION IN 1.5" METAL DECK SLAB

REGISTERED PROFESSIONAL ENGINEER MARCIN WASAZNIK S 6612 STRUCTURAL STATE OF CALIFORNIA

ISAT
A Division of Tomarco Contractor Specialties

International Seismic Application Technology
14848 Northam Street, La Mirada, CA 90638
877-999-4728 (Toll Free) 714-523-0845 (fax)
www.isatsb.com

Rev. 7
06/15/18
Page
D2.1SD2B

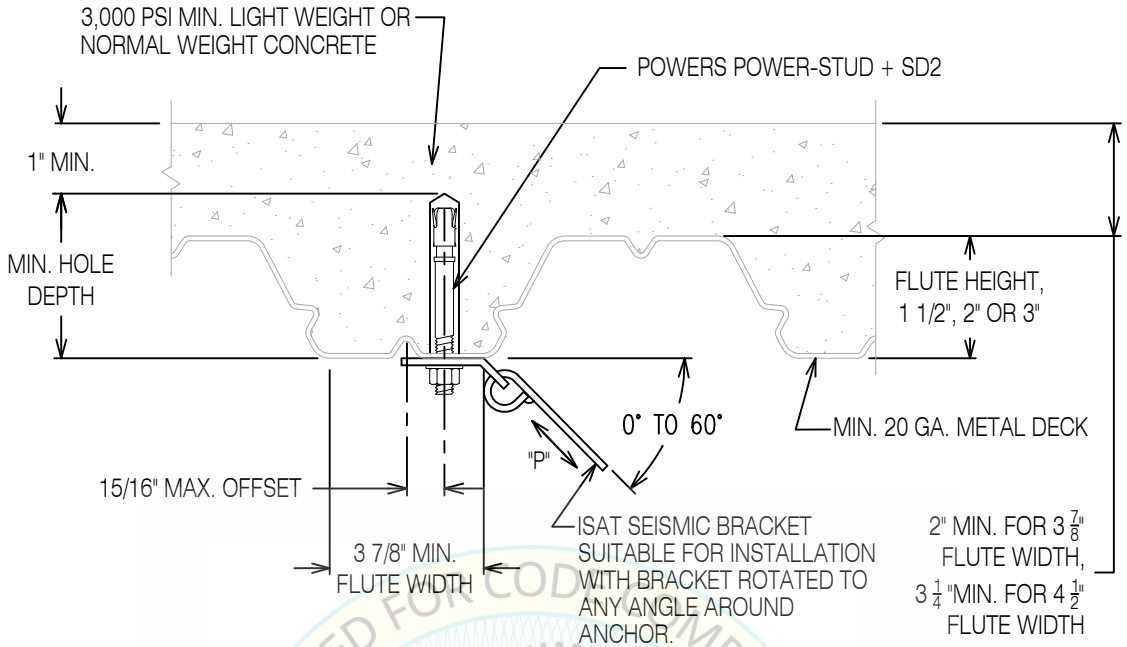

REVIEWED FOR CODE COMPLIANCE
HCAi
OPM-0403
DATE: 01-26-2024
CALIFORNIA BUILDING CODES

Seismically Qualified For Anchorage In Cracked Concrete
Seismic Design Categories D, E and F
Powers Power-Stud+ SD2 Concrete Expansion Anchor, Minimum 3000 psi LWC
ICC Report No. ESR-2502 (Dated May 2018), Table 1, Table 5 and Fig. 5B.

Brace Anchorage Designation	Anchor Diameter Inch	Brace Angle: 30°≤ θ ≤ 36° Maximum Brace Load (P)[4] Lbs.	Brace Angle: 36°< θ ≤ 60° Maximum Brace Load (P)[4] Lbs.	Minimum Hole Depth Inch	Minimum Effective Embed.[1] Inch	Installation Torque Ft-Lbs.	Edge Distance Inch	Minimum Anchor Spacing [2] Inch	Min. Concrete Thickness Above Top Flute (Inch)[3] Metal Deck Flute Height: 1 1/2"	2"	3"
1SD23812	3/8	330	306	2 5/8	2	20	4 1/2	6 3/4	2 1/8	2	2
1SD21215	1/2	399	343	2 3/4	2	40	4 1/2	6 3/4	2 1/4	2	2
1SD21218	1/2	718	613	4	3 1/4	40	6	9 3/4	-	-	2

1. MINIMUM EFFECTIVE EMBEDMENT IS AFTER THE ANCHOR HAS BEEN SET.
2. SPACING MEASURED ALONG THE FLUTE.
3. BASED ON INSTALLATION IN LOW FLUTE.
4. LOAD VALUES SHOWN ARE ALLOWABLE STRESS DESIGN (ASD). CAPACITIES DERIVED IN CONFORMANCE WITH ASCE 7-10, PIN 62 & ACI 318-11, Appendix D. Ωo=2.0

SINGLE ANCHOR POWERS POWER-STUD+ SD2 SEISMIC BRACE CONNECTION IN METAL DECK SLAB (SHALLOW TOPPING SLAB)

REGISTERED PROFESSIONAL ENGINEER MARCIN WASAZNIK S 6612 STRUCTURAL STATE OF CALIFORNIA

ISAT
A Division of Tomarco Contractor Specialties
International Seismic Application Technology
14848 Northam Street, La Mirada, CA 90638
877-999-4728 (Toll Free) 714-523-0845 (fax)
www.isatsb.com

Rev. 2
12/12/19
Page
D2.1SD2S

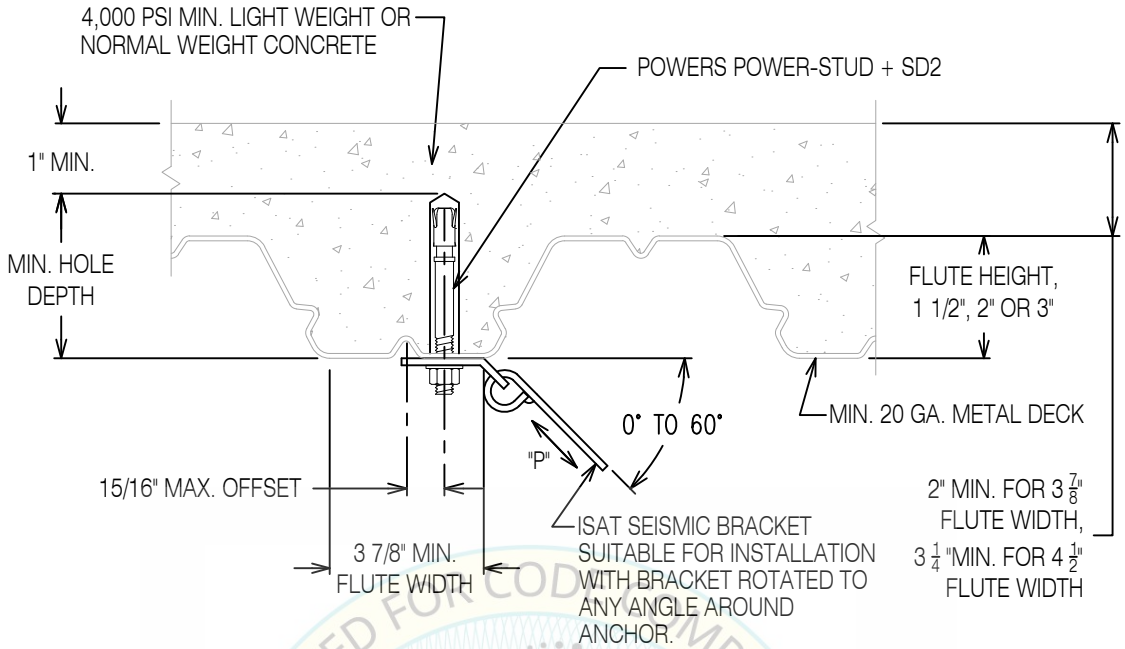

REVIEWED FOR CODE COMPLIANCE
HCAi
OPM-0403
DATE: 01-26-2024
CALIFORNIA BUILDING CODE

Seismically Qualified For Anchorage In Cracked Concrete
Seismic Design Categories D, E and F
Powers Power-Stud+ SD2 Concrete Expansion Anchor, Minimum 4000 psi LWC
ICC Report No. ESR-2502 (Dated May 2018), Table 1, Table 5 and Fig. 5B.

Brace Anchorage Designation	Anchor Diameter Inch	Brace Angle: 30°≤ θ ≤ 36° Maximum Brace Load (P)[4] Lbs.	Brace Angle: 36°< θ ≤ 60° Maximum Brace Load (P)[4] Lbs.	Minimum Hole Depth Inch	Minimum Effective Embed.[1] Inch	Installation Torque Ft-Lbs.	Edge Distance Inch	Minimum Anchor Spacing [2] Inch	Min. Concrete Thickness Above Top Flute (Inch)[3] Metal Deck Flute Height: 1 1/2"	2"	3"
1SD23812	3/8	347	327	2 5/8	2	20	4 1/2	6 3/4	2 1/8	2	2
1SD21215	1/2	437	384	2 3/4	2	40	4 1/2	6 3/4	2 1/4	2	2
1SD21218	1/2	786	688	4	3 1/4	40	6	9 3/4	-	-	2

1. MINIMUM EFFECTIVE EMBEDMENT IS AFTER THE ANCHOR HAS BEEN SET.
2. SPACING MEASURED ALONG THE FLUTE.
3. BASED ON INSTALLATION IN LOW FLUTE.
4. LOAD VALUES SHOWN ARE ALLOWABLE STRESS DESIGN (ASD). CAPACITIES DERIVED IN CONFORMANCE WITH ASCE 7-10, PIN 62 & ACI 318-11, Appendix D. Ωo=2.0

SINGLE ANCHOR POWERS POWER-STUD+ SD2 SEISMIC BRACE CONNECTION IN METAL DECK SLAB (SHALLOW TOPPING SLAB)

REGISTERED PROFESSIONAL ENGINEER
MARCIN WASAZNIK
S 6612
STRUCTURAL
STATE OF CALIFORNIA

ISAT
A Division of Tomarco Contractor Specialties

International Seismic Application Technology
14848 Northam Street, La Mirada, CA 90638
877-999-4728 (Toll Free) 714-523-0845 (fax)
www.isatsb.com

Rev. 2
12/12/19

Page
D2.1SD2S4

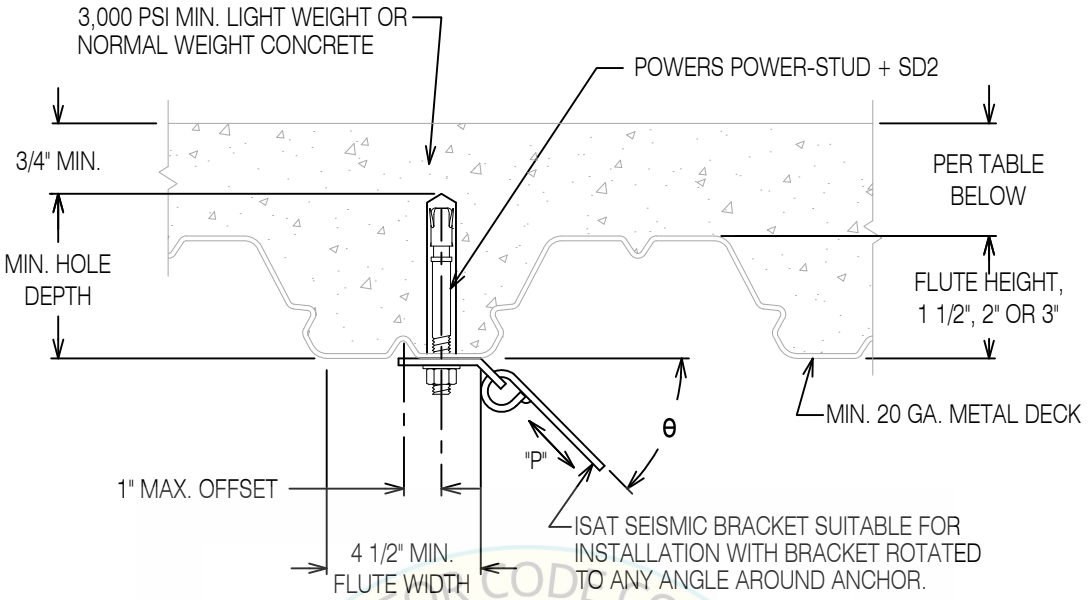

REVIEWED FOR CODE COMPLIANCE
HCAi
OPM-0403
DATE 01-26-2024
CALIFORNIA BUILDING CODE

Seismically Qualified For Anchorage In Cracked Concrete
Seismic Design Categories D, E and F
Powers Power-Stud+ SD2 Concrete Expansion Anchor, Minimum 3000 psi LWC
ICC Report No. ESR-2502 (Dated May 2017), Table 1, Table 5 and Fig. 5A.

Brace Anchorage Designation	Anchor Diameter Inch	Brace Angle 30°≤ θ ≤ 36° Maximum Brace Load (P)[4] Lbs.	Brace Angle 36°< θ ≤ 60° Maximum Brace Load (P)[4] Lbs.	Minimum Hole Depth Inch	Minimum Effective Embed.[1] Inch	Installation Torque Ft-Lbs.	Edge Distance Inch	Minimum Anchor Spacing[2] Inch	Min. Concrete Thickness Above Top Flute (Inch)[3] Metal Deck Flute Height 1 1/2"	2"	3"
1SD23812	3/8	330	306	2 5/8	2	20	4 1/2	6 3/4	3 1/4	3 1/4	3 1/4
1SD21215	1/2	447	364	2 3/4	2	40	4 1/2	6 3/4	3 1/4	3 1/4	3 1/4
1SD21218	1/2	724	615	4	3 1/4	40	6	9 3/4	3 1/4	3 1/4	3 1/4
1SD25824	5/8	1,006	982	5 1/4	4 1/4	60	8 3/4	12 3/4	4 1/2	4	3 1/4

1. MINIMUM EFFECTIVE EMBEDMENT IS AFTER THE ANCHOR HAS BEEN SET.
2. SPACING MEASURED ALONG THE FLUTE.
3. BASED ON INSTALLATION IN LOW FLUTE.
4. LOAD VALUES SHOWN ARE ALLOWABLE STRESS DESIGN (ASD). CAPACITIES DERIVED IN CONFORMANCE WITH ASCE 7-10, PIN 62 & ACI 318-11, Appendix D. Ωo=2.0

SINGLE ANCHOR POWERS POWER-STUD+ SD2 SEISMIC BRACE CONNECTION IN METAL DECK SLAB

REGISTERED PROFESSIONAL ENGINEER MARCIN WASAZNIK S 6612 STRUCTURAL STATE OF CALIFORNIA

ISAT
A Division of Tomarco Contractor Specialties
International Seismic Application Technology
14848 Northam Street, La Mirada, CA 90638
877-999-4728 (Toll Free) 714-523-0845 (fax)
www.isatsb.com

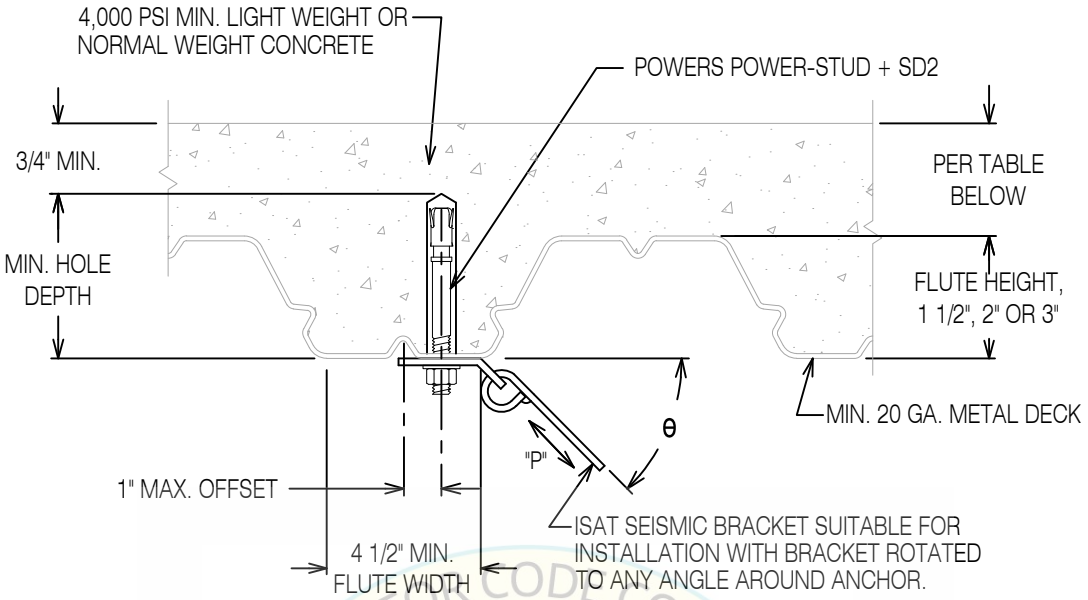

REVIEWED FOR CODE COMPLIANCE
HCAi
OPM-0403
DATE 01-26-2024
CALIFORNIA BUILDING CODE

Seismically Qualified For Anchorage In Cracked Concrete
Seismic Design Categories D, E and F
Powers Power-Stud+ SD2 Concrete Expansion Anchor, Minimum 4000 psi LWC
ICC Report No. ESR-2502 (Dated May 2017), Table 1, Table 5 and Fig. 5A.

Brace Anchorage Designation	Anchor Diameter Inch	Brace Angle 30°≤ θ ≤ 36° Maximum Brace Load (P)[4] Lbs.	Brace Angle 36°< θ ≤ 60° Maximum Brace Load (P)[4] Lbs.	Minimum Hole Depth Inch	Minimum Effective Embed.[1] Inch	Installation Torque Ft-Lbs.	Edge Distance Inch	Minimum Anchor Spacing [2] Inch	Min. Concrete Thickness Above Top Flute (Inch)[3] Metal Deck Flute Height 1 1/2"	2"	3"
1SD23812	3/8	347	327	2 5/8	2	20	4 1/2	6 3/4	3 1/4	3 1/4	3 1/4
1SD21215	1/2	495	411	2 3/4	2	40	4 1/2	6 3/4	3 1/4	3 1/4	3 1/4
1SD21218	1/2	793	691	4	3 1/4	40	6	9 3/4	3 1/4	3 1/4	3 1/4
1SD25824	5/8	1,071	1,059	5 1/4	4 1/4	60	8 3/4	12 3/4	4 1/2	4	3 1/4

1. MINIMUM EFFECTIVE EMBEDMENT IS AFTER THE ANCHOR HAS BEEN SET.
2. SPACING MEASURED ALONG THE FLUTE.
3. BASED ON INSTALLATION IN LOW FLUTE.
4. LOAD VALUES SHOWN ARE ALLOWABLE STRESS DESIGN (ASD). CAPACITIES DERIVED IN CONFORMANCE WITH ASCE 7-10, PIN 62 & ACI 318-11, Appendix D. Ωo=2.0

SINGLE ANCHOR POWERS POWER-STUD+ SD2 SEISMIC BRACE CONNECTION IN METAL DECK SLAB

REGISTERED PROFESSIONAL ENGINEER MARCIN WASAZNIK S 6612 STRUCTURAL STATE OF CALIFORNIA

ISAT
A Division of Tomarco Contractor Specialties
International Seismic Application Technology
14848 Northam Street, La Mirada, CA 90638
877-999-4728 (Toll Free) 714-523-0845 (fax)
www.isatsb.com

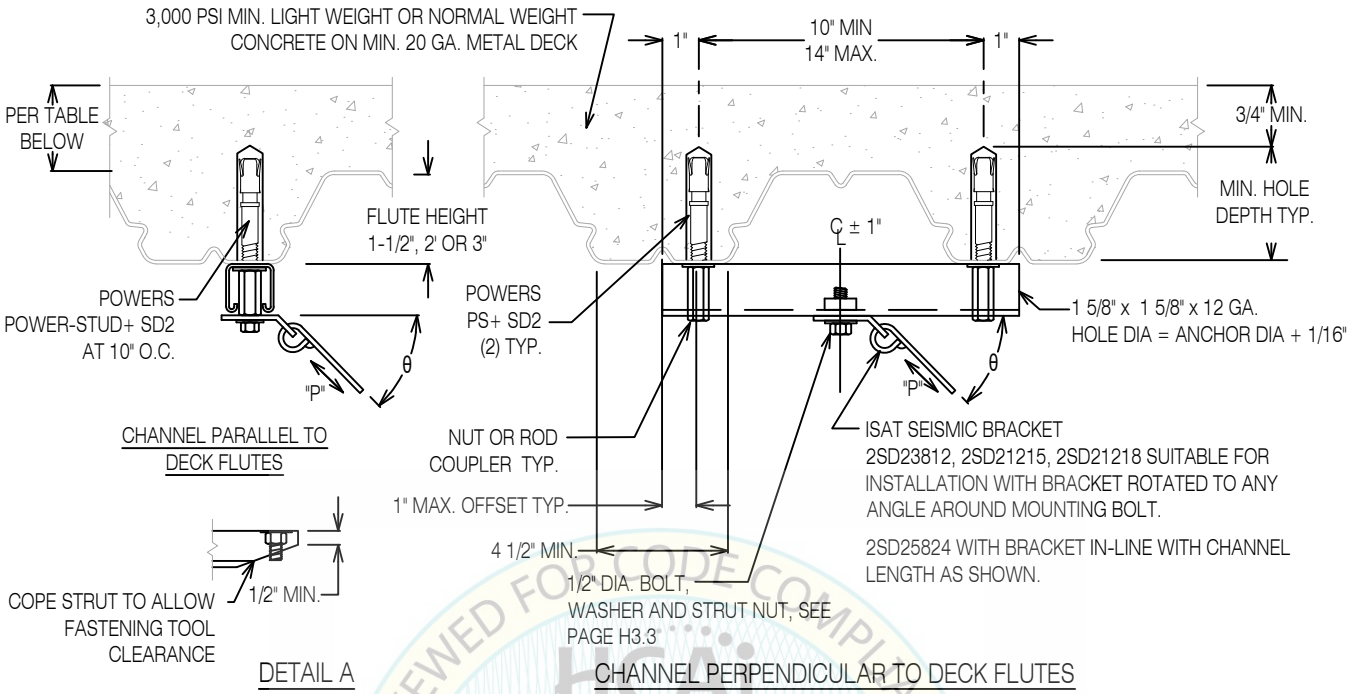

Seismically Qualified For Anchorage In Cracked Concrete
Seismic Design Categories D, E and F
Powers Power-Stud+ SD2 Concrete Expansion Anchor, Minimum 3000 psi LWC
ICC Report No. ESR-2502 (Dated May 2017), Table 1, Table 5 and Fig. 5A.

Brace Anchorage Designation	Anchor Diameter Inch	Brace Angle 30°≤ θ ≤ 36° Maximum Brace Load (P) Lbs.	Brace Angle 36°< θ ≤ 60° Maximum Brace Load (P) Lbs.	Minimum Hole Depth Inch	Minimum Effective Embed. [1] Inch	Installation Torque Ft-Lbs.	Edge Distance Inch	Minimum Anchor Spacing Inch	Min. Concrete Thickness Above Top Flute (Inch) [4] Metal Deck Flute Height 1 1/2"	2"	3"
2SD23812S	3/8	549	511	2 5/8	2	20	4 1/2	6 3/4	3 1/4	3 1/4	3 1/4
2SD21215S	1/2	746	606	2 3/4	2	40	4 1/2	6 3/4	3 1/4	3 1/4	3 1/4
2SD21218S	1/2	939	939	4	3 1/4	40	6	9 3/4	3 1/4	3 1/4	3 1/4
2SD25824S	5/8 [2]	1,529	1,529	5 1/4	4 1/4	60	8 3/4	12 3/4	4 1/2	4	3 1/4

1. MINIMUM EFFECTIVE EMBEDMENT IS AFTER THE ANCHOR HAS BEEN SET.
2. USE DETAIL A.
3. LOAD VALUES SHOWN ARE ALLOWABLE STRESS DESIGN (ASD). CAPACITIES DERIVED IN CONFORMANCE WITH ASCE 7-10, PIN 62 & ACI 318-11, Appendix D. Ωo=2.0
4. BASED ON INSTALLATION IN LOWER FLUTE.

DUAL ANCHOR POWERS POWER-STUD+ SD2 WITH STRUT SEISMIC BRACE CONNECTION IN METAL DECK SLAB

REGISTERED PROFESSIONAL ENGINEER MARCIN WASAZNIK S 6612 STRUCTURAL STATE OF CALIFORNIA

ISAT
A Division of Tomarco Contractor Specialties

International Seismic Application Technology
14848 Northam Street, La Mirada, CA 90638
877-999-4728 (Toll Free) 714-523-0845 (fax)
www.isatsb.com

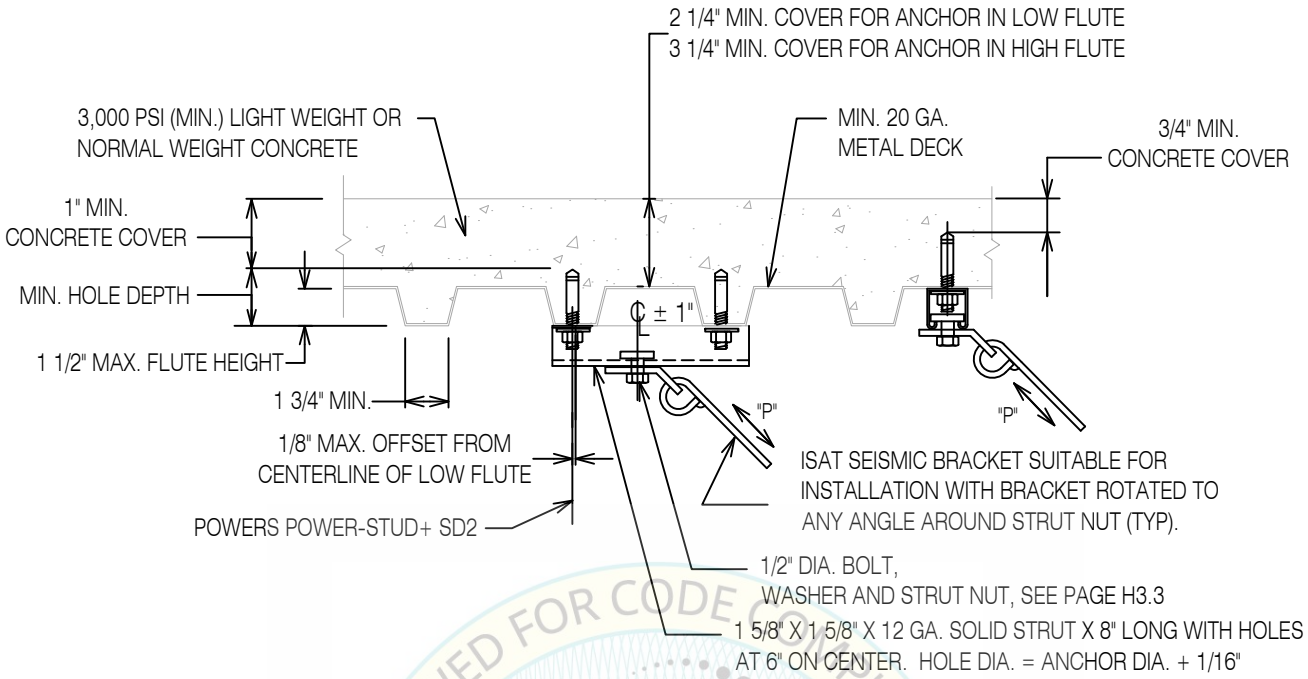

REVIEWED FOR CODE COMPLIANCE
HCAi
DATE: 01-26-2024
CALIFORNIA BUILDING CODE 2022

Seismically Qualified For Anchorage In Cracked Concrete
Seismic Design Categories D, E and F
Powers Power-Stud+ SD2 Concrete Expansion Anchor, Minimum 3000 psi LWC
ICC Report No. ESR-2502 (Dated May 2017), Table 1, Table 5 and Fig. 5C.

Brace Anchorage Designation	Anchor Quantity	Anchor Diameter Inch	Maximum Brace Load (P) Lbs.	Minimum Hole Depth [1] Inch	Minimum Effective Embed. [2] Inch	Installation Torque Ft-Lbs.	Edge Distance Inch	Minimum Anchor Spacing Inch
Minimum Concrete Strength = 3000 psi								
2SD22112S	2	3/8	413	2 5/8	2	20	4 1/2	6
2SD22115S	2	1/2	513	2 3/4	2	40	4 1/2	6
Minimum Concrete Strength = 4000 psi								
2SD22112S	2	3/8	443	2 5/8	2	20	4 1/2	6
2SD22115S	2	1/2	576	2 3/4	2	40	4 1/2	6

1. MINIMUM HOLE DEPTH IS TO BE VERIFIED BY THE INSPECTOR.
2. MINIMUM EFFECTIVE EMBEDMENT IS AFTER THE ANCHOR HAS BEEN SET.
3. REFER TO PAGE D2.1SD2B FOR MINIMUM CONCRETE THICKNESS ABOVE TOP FLUTE.
4. LOAD VALUES SHOWN ARE ALLOWABLE STRESS DESIGN (ASD). CAPACITIES DERIVED IN CONFORMANCE WITH ASCE 7-10, PIN 62 & ACI 318-11, Appendix D. Ωo=2.0

DUAL ANCHOR POWERS POWER-STUD+ SD2 FOR SEISMIC BRACE CONNECTION IN 1.5" METAL DECK SLAB

REGISTERED PROFESSIONAL ENGINEER MARCIN WASAZNIK S 6612 STRUCTURAL STATE OF CALIFORNIA

ISAT
A Division of Tomarco Contractor Specialties
International Seismic Application Technology
14848 Northam Street, La Mirada, CA 90638
877-999-4728 (Toll Free) 714-523-0845 (fax)
www.isatsb.com

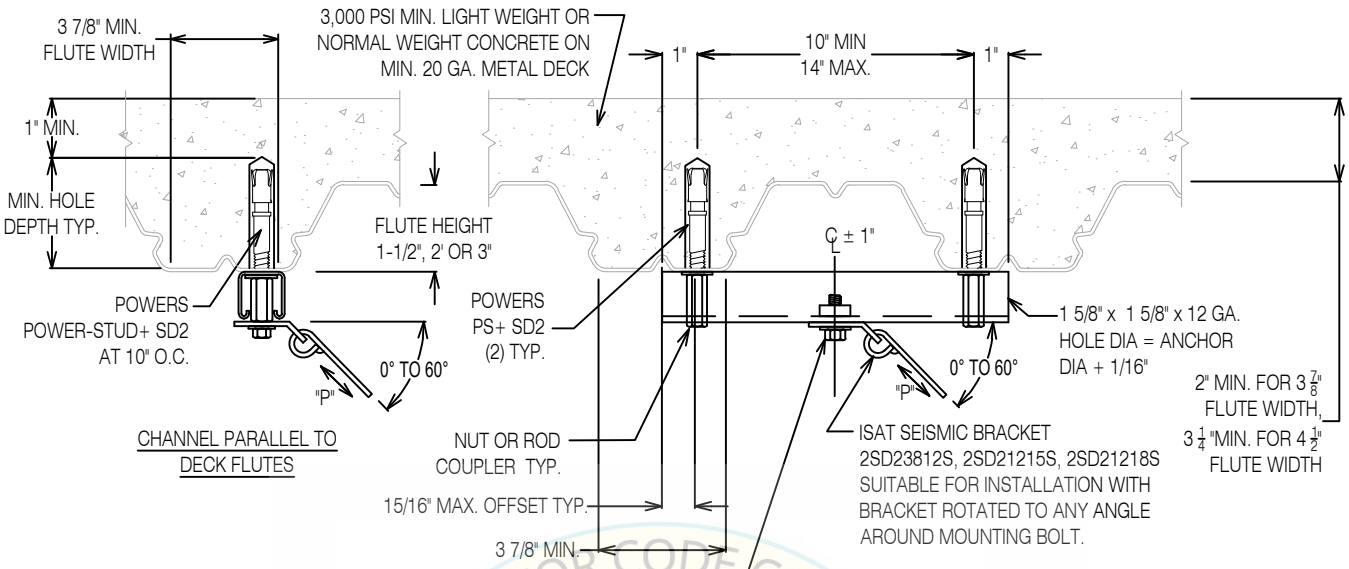

CHANNEL PERPENDICULAR TO DECK FLUTES

REVIEWED FOR CODE COMPLIANCE
HCAi
OPM-0403
DATE: 01-26-2024
CALIFORNIA BUILDING CODE 2019

Seismically Qualified For Anchorage In Cracked Concrete
Seismic Design Categories D, E and F
Powers Power-Stud+ SD2 Concrete Expansion Anchor, Minimum 3000 psi LWC
ICC Report No. ESR-2502 (Dated May 2018), Table 1, Table 5 and Fig. 5B.

Brace Anchorage Designation	Anchor Diameter Inch	Brace Angle 30°≤ θ ≤ 36° Maximum Brace Load (P) Lbs.	Brace Angle 36°< θ ≤ 60° Maximum Brace Load (P) Lbs.	Minimum Hole Depth Inch	Minimum Effective Embed. [1] Inch	Installation Torque Ft-Lbs.	Edge Distance Inch	Minimum Anchor Spacing Inch	Min. Concrete Thickness Above Top Flute (Inch) [4] Metal Deck Flute Height 1 1/2"	2"	3"
2SD23812S	3/8	549	511	2 5/8	2	20	4 1/2	6 3/4	2 1/8	2	2
2SD21215S	1/2	665	571	2 3/4	2	40	4 1/2	6 3/4	2 1/4	2	2
2SD21218S	1/2	939	939	4	3 1/4	40	6	9 3/4	-	-	2

1. MINIMUM EFFECTIVE EMBEDMENT IS AFTER THE ANCHOR HAS BEEN SET.
2. LOAD VALUES SHOWN ARE ALLOWABLE STRESS DESIGN (ASD). CAPACITIES DERIVED IN CONFORMANCE WITH ASCE 7-10, PIN 62 & ACI 318-11, Appendix D. Ωo=2.0
3. BASED ON INSTALLATION IN LOWER FLUTE.

DUAL ANCHOR POWERS POWER-STUD+ SD2 WITH STRUT SEISMIC BRACE CONNECTION IN METAL DECK SLAB (SHALLOW TOPPING SLAB)

REGISTERED PROFESSIONAL ENGINEER
MARCIN WASAZNIK
S 6612
STRUCTURAL
STATE OF CALIFORNIA

ISAT
A Division of Tomarco Contractor Specialties
International Seismic Application Technology
14848 Northam Street, La Mirada, CA 90638
877-999-4728 (Toll Free) 714-523-0845 (fax)
www.isatsb.com

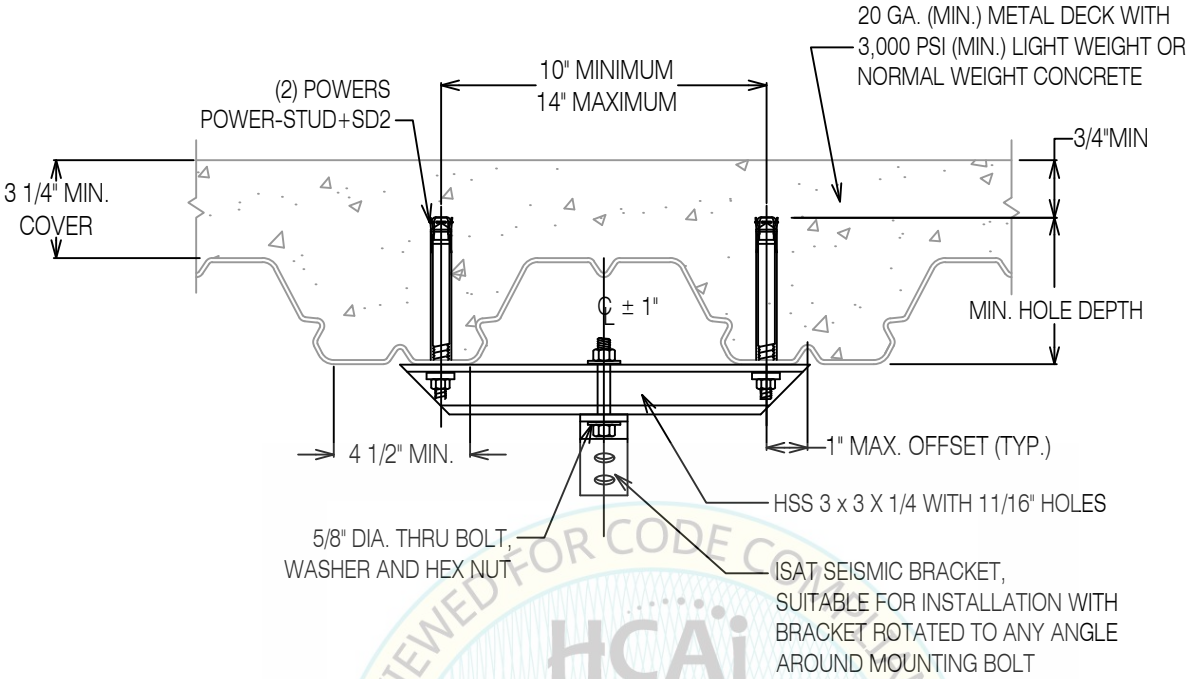

REVIEWED FOR CODE COMPLIANCE
HCAi
OPM-0403
By William Staehlin
DATE 01-26-2024
CALIFORNIA BUILDING CODE, 2017

Seismically Qualified For Anchorage In Cracked Concrete
Seismic Design Categories D, E and F
Powers Power-Stud+ SD2 Concrete Expansion Anchor, Minimum 3000 psi LWC
ICC Report No. ESR-2502 (Dated May 2017), Table 1, Table 5 and Fig. 5A.

Brace Anchorage Designation	Anchor Diameter Inch	Maximum Brace Load (P) Lbs.	Minimum Hole Depth Inch	Minimum Effective Embed. [1] Inch	Installation Torque Ft-Lbs.	Edge Distance Inch	Minimum Anchor Spacing Inch	Min. Concrete Thickness Above Top Flute (Inch) [3] Metal Deck Flute Height		
								1 1/2"	2"	3"
2SD25824H	5/8	1569	5 1/4	4 1/4	60	8 3/4	12 3/4	4 1/2	4	3 1/4

1. MINIMUM EFFECTIVE EMBEDMENT IS AFTER THE ANCHOR HAS BEEN SET.
2. LOAD VALUES SHOWN ARE ALLOWABLE STRESS DESIGN (ASD). CAPACITIES DERIVED IN CONFORMANCE WITH ASCE 7-10, PIN 62 & ACI 318-11, Appendix D. Ωo=2.0
3. BASED ON INSTALLATION IN LOWER FLUTE.

DUAL ANCHOR POWERS POWER-STUD+ SD2 WITH TUBE SEISMIC BRACE CONNECTION IN METAL DECK SLAB

REGISTERED PROFESSIONAL ENGINEER
MARCIN WASAZNIK
S 6612
STRUCTURAL
STATE OF CALIFORNIA

ISAT
A Division of Tomarco Contractor Specialties

International Seismic Application Technology
14848 Northam Street, La Mirada, CA 90638
877-999-4728 (Toll Free) 714-523-0845 (fax)
www.isatsb.com

Rev. 7
06/15/18
Page
D2.3SD2

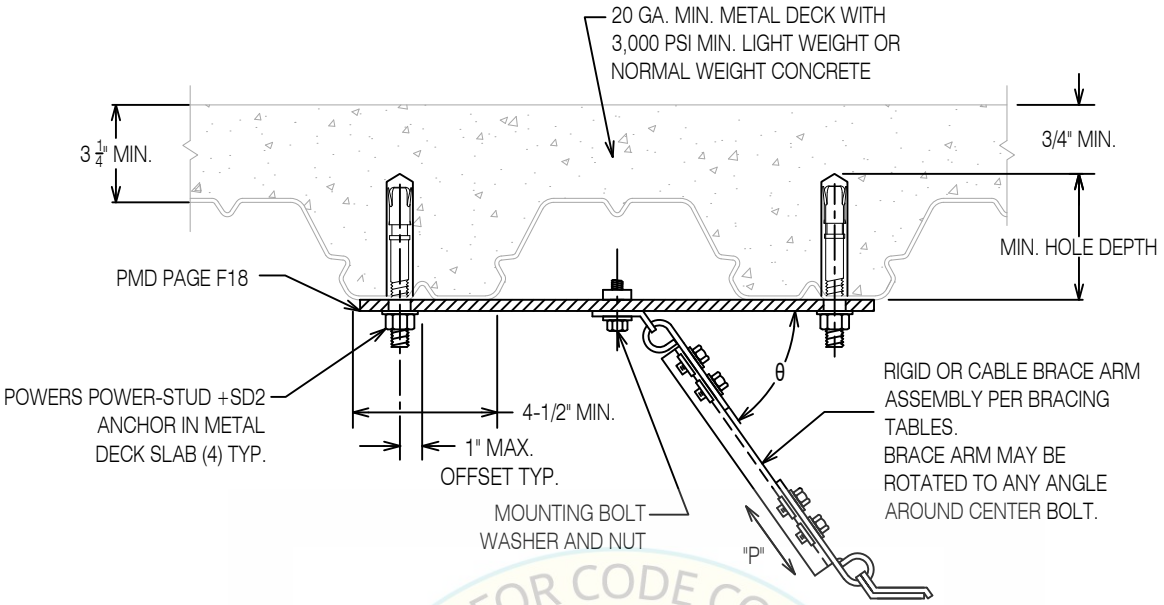

REVIEWED FOR CODE COMPLIANCE
HCAi
DATE 01/26/2024
CALIFORNIA BUILDING CODE 2022

Seismically Qualified For Anchorage In Cracked Concrete
Seismic Design Categories D, E and F
Powers Power-Stud+ SD2 Concrete Expansion Anchor, Minimum 3000 psi LWC
ICC Report No. ESR-2502 (Dated May 2017), Table 1, Table 5 and Fig. 5A.

Brace Anchorage Designation	Anchor Diameter Inch	Maximum Brace Load (P) Lbs.	Minimum Hole Depth Inch	Minimum Effective Embed.[1] Inch	Installation Torque Ft-Lbs.	Edge Distance Inch	Plate Number Page F18	Mounting Bolt Diameter Inch
4SD23812P	3/8	1,177	2 5/8	2	20	4 1/2	D243	1/2
4SD21218P	1/2	2,465	4	3 1/4	40	6	D245	1/2
4SD25824P	5/8	3,719	5 1/4	4 1/4	60	8 3/4	D255	5/8

1. MINIMUM EFFECTIVE EMBEDMENT IS AFTER THE ANCHOR HAS BEEN SET.
2. LOAD VALUES SHOWN ARE ALLOWABLE STRESS DESIGN (ASD). CAPACITIES DERIVED IN CONFORMANCE WITH ASCE 7-10, PIN 62 & ACI 318-11, Appendix D. Ωo=2.0
3. REFER TO PAGE D2.1SD2 FOR MINIMUM CONCRETE THICKNESS ABOVE TOP FLUTE.

4-ANCHOR POWERS POWER-STUD +SD2 PLATE IN METAL DECK SLAB (PMD)

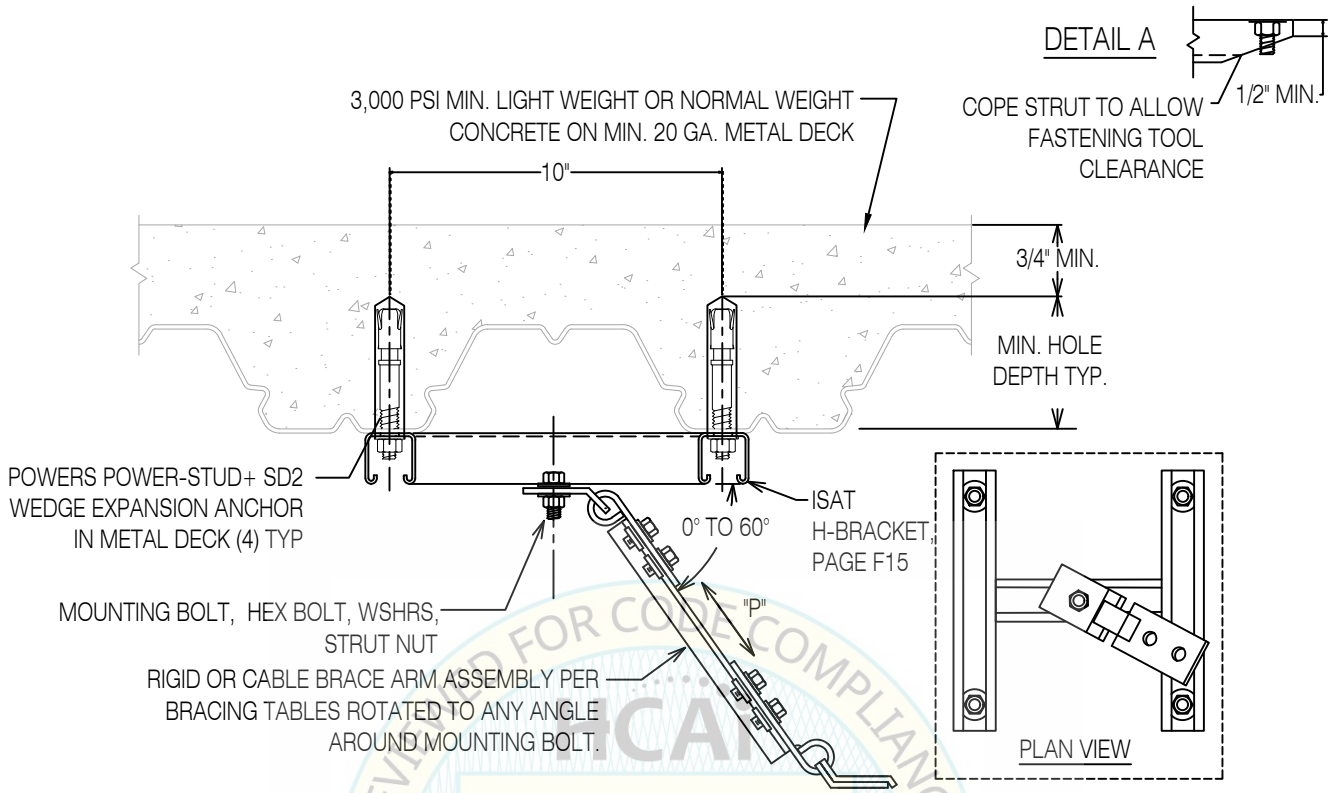

REVIEWED FOR CODE COMPLIANCE
OPM-0403
By: William Staehlin
CALIFORNIA BUILDING CODE 2019

Seismically Qualified For Anchorage In Cracked Concrete
Seismic Design Categories D, E and F
Powers Power-Stud+ SD2 Concrete Expansion Anchor, Minimum 3000 psi LWC
ICC Report No. ESR-2502 (Dated May 2017), Table 1, Table 5 and Fig. 5A.

Brace Anchorage Designation	Anchor Diameter Inch	Maximum Brace Load (P) Lbs.	Minimum Hole Depth Inch	Minimum Effective Embed. [1] Inch	Installation Torque Ft-Lbs.	Minimum Edge Distance Inch	H-Bracket Number Pg. F15	Mounting Bolt Diameter Inch
4SD23812F	3/8	1,226	2 5/8	2	20	4 1/2	H13.1	1/2
4SD21215F	1/2	1,455	2 3/4	2	40	4 1/2	H13.2	5/8
4SD21218F	1/2	1,846	4	3 1/4	40	6	H13.2	5/8
4SD25824F	5/8	1,846	5 1/4	4 1/4	60	8 3/4	H13.3	5/8

1. MINIMUM EFFECTIVE EMBEDMENT IS AFTER THE ANCHOR HAS BEEN SET.
2. LOAD VALUES SHOWN ARE ALLOWABLE STRESS DESIGN (ASD). CAPACITIES DERIVED IN CONFORMANCE WITH ASCE 7-10, PIN 62 & ACI 318-11, Appendix D. Ωo=2.0
3. REFER TO PAGE D2.1SD2 FOR MINIMUM CONCRETE THICKNESS ABOVE TOP FLUTE.

4-ANCHOR POWERS POWER-STUD+ SD2 H-BRACKET ATTACHMENT TO FORM POUR SLAB

REGISTERED PROFESSIONAL ENGINEER MARCIN WASAZNIK S 6612 STRUCTURAL STATE OF CALIFORNIA

ISAT
A Division of Tomarco Contractor Specialties

International Seismic Application Technology
14848 Northam Street, La Mirada, CA 90638
877-999-4728 (Toll Free) 714-523-0845 (fax)
www.isatsb.com

Rev. 7
06/15/18

Page
D2.4.1SD2

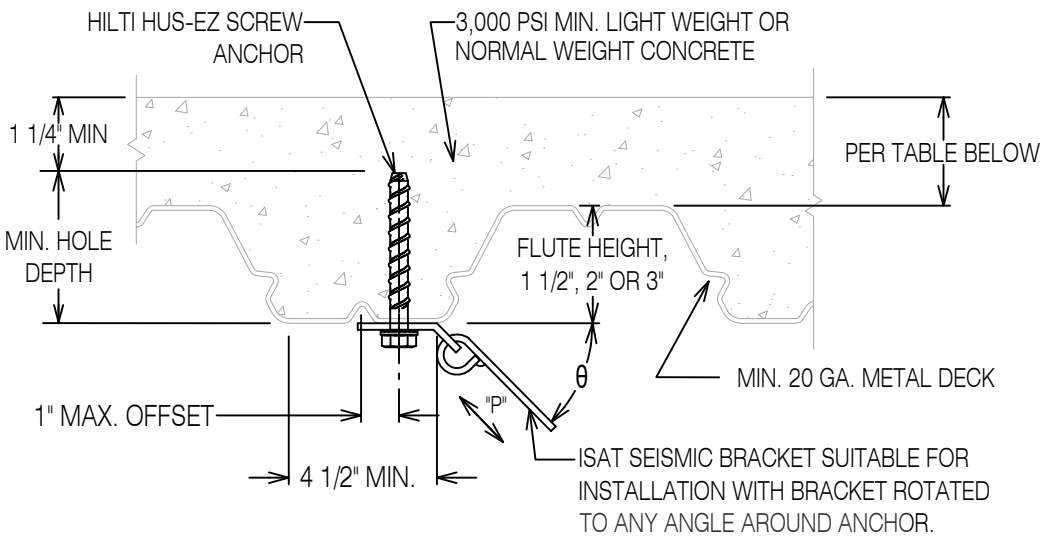

Seismically Qualified For Anchorage In Cracked Concrete
Seismic Design Categories D, E and F
Hilti Kwik HUS-EZ Screw Anchor, Minimum 3000 psi LWC
ICC Report No. ESR-3027 (Dated December 2017), Table 5

Brace Anchorage Designation	Anchor Diameter Inch	Brace Angle 30° ≤ θ ≤ 36° Maximum Brace Load (P)[4] Lbs.	Brace Angle 36° < θ ≤ 60° Maximum Brace Load (P)[4] Lbs.	Minimum Hole Depth Inch	Minimum Effective Embed.[1] Inch	Maximum Impact Wrench Torque Ft-Lbs.	Minimum Anchor Spacing [2] Inch	Edge Distance Inch	Min. Concrete Thickness Above Top Flute (Inch)[3] Metal Deck Flute Height 1 1/2"	2"	3"
1HUS147	1/4	155	138	2	1.18	114	6.75	4 1/2	2 1/2	2 1/2	2 1/2
1HUS388	3/8	180	169	1 7/8	1.11	114	6.75	4 1/2	3 1/4	3 1/4	3 1/4
1HUS1210	1/2	186	173	2 5/8	1.52	137	6.75	4 1/2	3 1/4	3 1/4	3 1/4
1HUS1218	1/2	550	549	4 5/8	3.22	450	9.66	6	4 3/8	3 7/8	3 1/4
1HUS5822	5/8	733	740	5 3/8	3.88	450	11.64	8 3/4	5 1/8	4 5/8	3 5/8

1. MINIMUM EFFECTIVE EMBEDMENT IS AFTER THE ANCHOR HAS BEEN SET.
2. SPACING MEASURED ALONG THE FLUTE.
3. BASED ON INSTALLATION IN LOW FLUTE.
4. LOAD VALUES SHOWN ARE ALLOWABLE STRESS DESIGN (ASD). CAPACITIES DERIVED IN CONFORMANCE WITH ASCE 7-10, PIN 62 & ACI 318-11, Appendix D. Ωo=2.0

REVIEWED FOR CODE COMPLIANCE
OPM-0403
BY: William Staehlin
DATE: 01-26-2024
CALIFORNIA BUILDING CODE, 2022

SINGLE HILTI KWIK HUS-EZ SCREW ANCHOR FOR SEISMIC BRACE CONNECTION IN METAL DECK SLAB

REGISTERED PROFESSIONAL ENGINEER MARCIN WASAZNIK S 6612 STRUCTURAL STATE OF CALIFORNIA

ISAT
A Division of Tomarco Contractor Specialties

International Seismic Application Technology
14848 Northam Street, La Mirada, CA 90638
877-999-4728 (Toll Free) 714-523-0845 (fax)
www.isatsb.com

Rev. 7
06/15/18

Page
D2.1HUS3

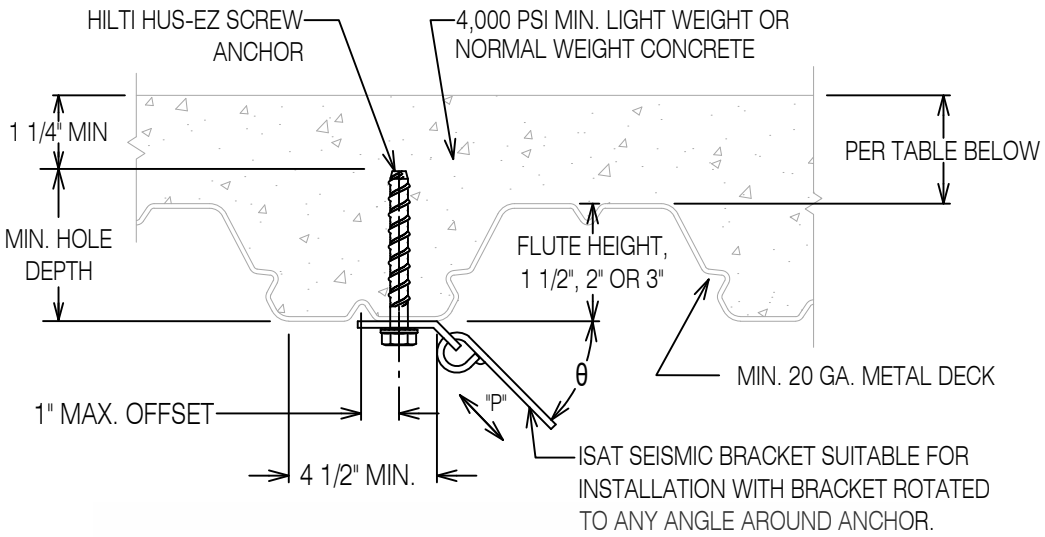

Seismically Qualified For Anchorage In Cracked Concrete
Seismic Design Categories D, E and F
Hilti Kwik HUS-EZ Screw Anchor, Minimum 4000 psi LWC
ICC Report No. ESR-3027 (Dated December 2017), Table 5

Brace Anchorage Designation	Anchor Diameter Inch	Brace Angle 30° ≤ θ ≤ 36° Maximum Brace Load (P)[4] Lbs.	Brace Angle 36° < θ ≤ 60° Maximum Brace Load (P)[4] Lbs.	Minimum Hole Depth Inch	Minimum Effective Embed.[1] Inch	Maximum Impact Wrench Torque Ft-Lbs.	Minimum Anchor Spacing [2] Inch	Edge Distance Inch	Min. Concrete Thickness Above Top Flute (Inch)[3] Metal Deck Flute Height 1 1/2"	2"	3"
1HUS147	1/4	168	154	2	1.18	114	6.75	4 1/2	2 1/2	2 1/2	2 1/2
1HUS388	3/8	193	185	1 7/8	1.11	114	6.75	4 1/2	3 1/4	3 1/4	3 1/4
1HUS1210	1/2	201	191	2 5/8	1.52	137	6.75	4 1/2	3 1/4	3 1/4	3 1/4
1HUS1218	1/2	580	580	4 5/8	3.22	450	9.66	6	4 3/8	3 7/8	3 1/4
1HUS5822	5/8	758	771	5 3/8	3.88	450	11.64	8 3/4	5 1/8	4 5/8	3 5/8

1. MINIMUM EFFECTIVE EMBEDMENT IS AFTER THE ANCHOR HAS BEEN SET.
2. SPACING MEASURED ALONG THE FLUTE.
3. BASED ON INSTALLATION IN LOW FLUTE.
4. LOAD VALUES SHOWN ARE ALLOWABLE STRESS DESIGN (ASD). CAPACITIES DERIVED IN CONFORMANCE WITH ASCE 7-10, PIN 62 & ACI 318-11, Appendix D. Ωo=2.0

REVIEWED FOR CODE COMPLIANCE
OPM-0403
BY: William Staehlin
DATE: 01-26-2024
FLORIDA BUILDING CODE, 2023

SINGLE HILTI KWIK HUS-EZ SCREW ANCHOR FOR SEISMIC BRACE CONNECTION IN METAL DECK SLAB

REGISTERED PROFESSIONAL ENGINEER MARCIN WASAZNIK S 6612 STRUCTURAL STATE OF CALIFORNIA

ISAT
A Division of Tomarco Contractor Specialties

International Seismic Application Technology
14848 Northam Street, La Mirada, CA 90638
877-999-4728 (Toll Free) 714-523-0845 (fax)
www.isatsb.com

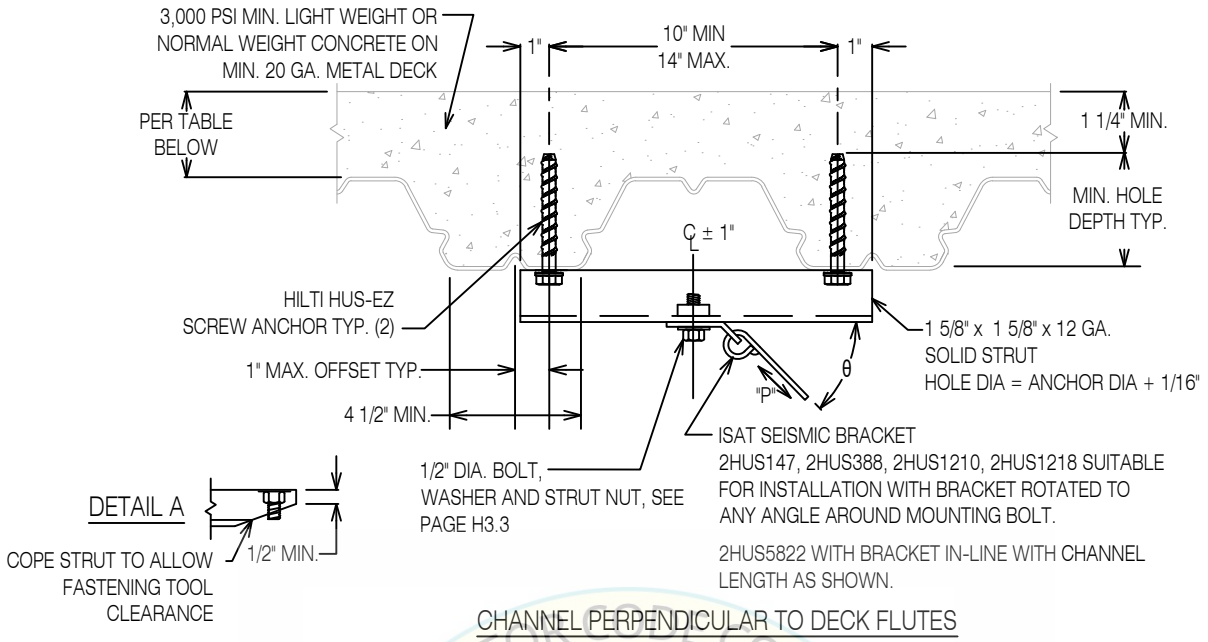

CHANNEL PERPENDICULAR TO DECK FLUTES

REVIEWED FOR CODE COMPLIANCE
HCAi
BY: William Staehlin
DATE: 01-26-2024
CALIFORNIA BUILDING CODE, 2022

Seismically Qualified For Anchorage In Cracked Concrete
Seismic Design Categories D, E and F
Hilti Kwik HUS-EZ Screw Anchor, Minimum 3000 psi LWC
ICC Report No. ESR-3027 (Dated December 2017), Table 5

Brace Anchorage Designation	Anchor Diameter Inch	Brace Angle 30° ≤ θ ≤ 36° Maximum Brace Load (P) Lbs.	Brace Angle 36° < θ ≤ 60° Maximum Brace Load (P) Lbs.	Minimum Hole Depth Inch	Minimum Effective Embed.[1] Inch	Maximum Impact Wrench Torque Ft-Lbs.	Minimum Anchor Spacing Inch	Edge Distance Inch	Min. Concrete Thickness Above Top Flute (Inch)[3] Metal Deck Flute Height 1 1/2"	2"	3"
2HUS147S	1/4	258	231	2	1.18	114	6.75	4 1/2	2 1/2	2 1/2	2 1/2
2HUS388S	3/8	299	282	1 7/8	1.11	114	6.75	4 1/2	3 1/4	3 1/4	3 1/4
2HUS1210S	1/2	311	289	2 5/8	1.52	137	6.75	4 1/2	3 1/4	3 1/4	3 1/4
2HUS1218S	1/2	917	917	4 5/8	3.22	450	9.66	6	4 3/8	3 7/8	3 1/4
2HUS5822S	5/8[4]	1,355	1,355	5 3/8	3.88	450	11.64	8 3/4	5 1/8	4 5/8	3 5/8

1. MINIMUM EFFECTIVE EMBEDMENT IS AFTER THE ANCHOR HAS BEEN SET.
2. LOAD VALUES SHOWN ARE ALLOWABLE STRESS DESIGN (ASD). CAPACITIES DERIVED IN CONFORMANCE WITH ASCE 7-10, PIN 62 & ACI 318-11, Appendix D. Ωo=2.0
3. BASED ON INSTALLATION IN LOWER FLUTE.
4. USE DETAIL A.

DUAL ANCHOR HILTI KWIK HUS-EZ SCREW ANCHOR WITH STRUT SEISMIC BRACE CONNECTION IN METAL DECK SLAB

REGISTERED PROFESSIONAL ENGINEER MARCIN WASAZNIK S 6612 STRUCTURAL STATE OF CALIFORNIA

ISAT
A Division of Tomarco Contractor Specialties
International Seismic Application Technology
14848 Northam Street, La Mirada, CA 90638
877-999-4728 (Toll Free) 714-523-0845 (fax)
www.isatsb.com

Rev. 7
06/15/18

Page
D2.2HUS3

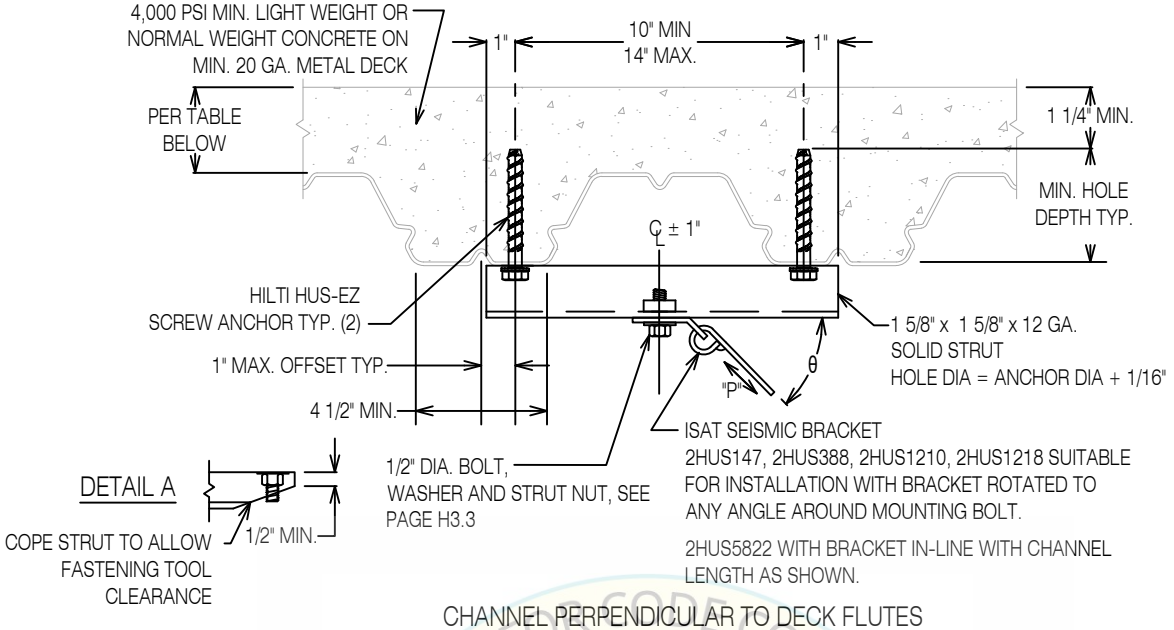

CHANNEL PERPENDICULAR TO DECK FLUTES

Seismically Qualified For Anchorage In Cracked Concrete
Seismic Design Categories D, E and F
Hilti Kwik HUS-EZ Screw Anchor, Minimum 4000 psi LWC
ICC Report No. ESR-3027 (Dated December 2017), Table 5

Brace Anchorage Designation	Anchor Diameter Inch	Brace Angle 30° ≤ θ ≤ 36° Maximum Brace Load (P) Lbs.	Brace Angle 36° < θ ≤ 60° Maximum Brace Load (P) Lbs.	Minimum Hole Depth Inch	Minimum Effective Embed.[1] Inch	Maximum Impact Wrench Torque Ft-Lbs.	Minimum Anchor Spacing Inch	Edge Distance Inch	Min. Concrete Thickness Above Top Flute (Inch)[3] Metal Deck Flute Height 1 1/2"	2"	3"
2HUS147S	1/4	280	257	2	1.18	114	6.75	4 1/2	2 1/2	2 1/2	2 1/2
2HUS388S	3/8	322	311	1 7/8	1.11	114	6.75	4 1/2	3 1/4	3 1/4	3 1/4
2HUS1210S	1/2	334	321	2 5/8	1.52	137	6.75	4 1/2	3 1/4	3 1/4	3 1/4
2HUS1218S	1/2	939	939	4 5/8	3.22	450	9.66	6	4 3/8	3 7/8	3 1/4
2HUS5822S	5/8[4]	1,420	1,422	5 3/8	3.88	450	11.64	8 3/4	5 1/8	4 5/8	3 5/8

1. MINIMUM EFFECTIVE EMBEDMENT IS AFTER THE ANCHOR HAS BEEN SET.
2. LOAD VALUES SHOWN ARE ALLOWABLE STRESS DESIGN (ASD). CAPACITIES DERIVED IN CONFORMANCE WITH ASCE 7-10, PIN 62 & ACI 318-11, Appendix D. Ωo=2.0
3. BASED ON INSTALLATION IN LOWER FLUTE.
4. USE DETAIL A.

DUAL ANCHOR HILTI KWIK HUS-EZ SCREW ANCHOR WITH STRUT SEISMIC BRACE CONNECTION IN METAL DECK SLAB

REGISTERED PROFESSIONAL ENGINEER MARCIN WASAZNIK S 6612 STRUCTURAL STATE OF CALIFORNIA

ISAT
A Division of Tomarco Contractor Specialties

International Seismic Application Technology
14848 Northam Street, La Mirada, CA 90638
877-999-4728 (Toll Free) 714-523-0845 (fax)
www.isatsb.com

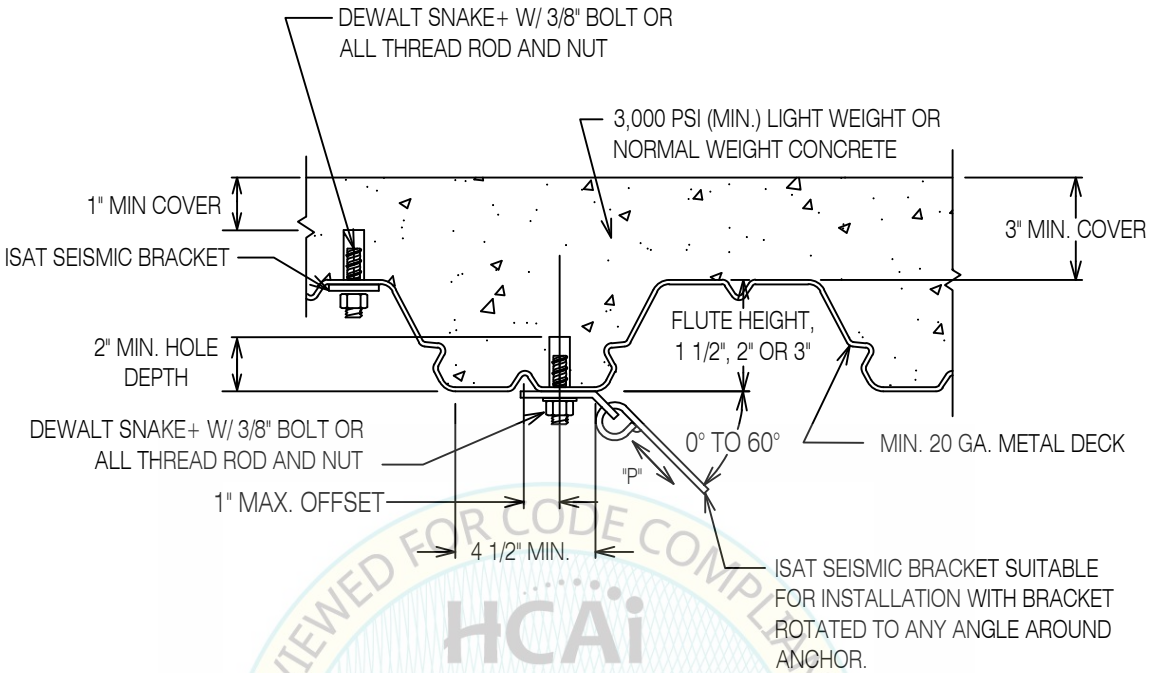

REVIEWED FOR CODE COMPLIANCE
HCAi
OPM-0403
BY: WILLIAM STAEHLIN
DATE: 01-26-2024
CALIFORNIA BUILDING CODE

SINGLE ANCHOR CONNECTION DETAILS
Metal Deck With Minimum 3,000 psi Light Weight or Normal Weight Concrete
Seismically Qualified for Anchorage In Cracked Concrete
Dewalt Snake+ Anchor
ICC Report No. ESR-2272 (Dated December, 2022), Table 2 and 3.

Brace Anchorage Designation	Anchor Quantity	Anchor Diameter Inch	Maximum Brace Load (P) Lbs.	Minimum Hole Depth [1] Inch	Minimum Effective Embedment [2] Inch	Minimum Anchor Spacing Inch	Critical Edge Distance Inch	Screwdriver Installation Max. Torque Ft-Lbs.	Rod or Bolt Installation Max. Torque Ft-Lbs.	Min. Concrete Thickness Above Top Flute (Inch) Metal Deck Flute Height		
										1 1/2"	2"	3"
1PSN38	1	3/8	186	2	1 1/8	6 3/4	3	345	8	3	3	3

1. MINIMUM HOLE DEPTH IS TO BE VERIFIED BY THE INSPECTOR.
2. MINIMUM EFFECTIVE EMBEDMENT IS AFTER THE ANCHOR HAS BEEN SET.
3. LOAD VALUES SHOWN ARE ALLOWABLE STRESS DESIGN (ASD). CAPACITIES DERIVED IN CONFORMANCE WITH ASCE 7-16 AND ACI 318. Ωo=2.0

SINGLE ANCHOR DEWALT SNAKE+ FOR SEISMIC BRACE CONNECTION IN METAL DECK SLAB

REGISTERED PROFESSIONAL ENGINEER
MARCIN WASAZNIK
S-6612
STRUCTURAL
STATE OF CALIFORNIA
01/26/2024

ISAT
A Division of Tomarco Contractor Specialties
International Seismic Application Technology
14848 Northam Street, La Mirada, CA 90638
877-999-4728 (Toll Free) 714-523-0845 (fax)
www.isatsb.com

Rev. 10
11/21/23
Page
D2.1SN

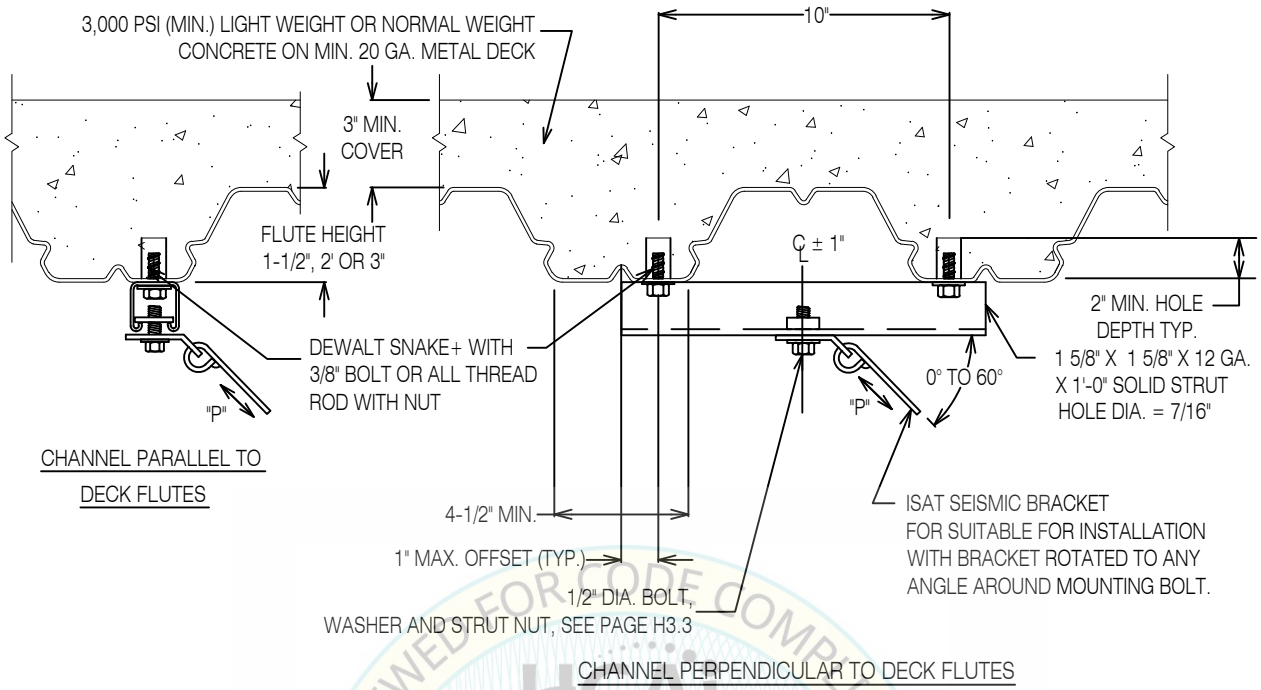

REVIEWED FOR CODE COMPLIANCE
HCAI
OPM-0403
BY: William Staehlin
DATE: 01-26-2024
CALIFORNIA BUILDING CODE

DUAL ANCHOR CONNECTION DETAILS

Metal Deck With Minimum 3,000 psi Light Weight or Normal Weight Concrete

Seismically Qualified for Anchorage In Cracked Concrete

Dewalt Snake+ Anchor

ICC Report No. ESR-2272 (Dated December, 2022), Table 2 and 3.

Brace Anchorage Designation	Anchor Quantity	Anchor Diameter Inch	Maximum Brace Load (P) Lbs.	Minimum Hole Depth [1] Inch	Minimum Effective Embedment [2] Inch	Minimum Anchor Spacing Inch	Critical Edge Distance Inch	Screwdriver Installation Max. Torque Ft-Lbs.	Rod or Bolt Installation Max. Torque Ft-Lbs.	Min. Concrete Thickness Above Top Flute (Inch) Metal Deck Flute Height		
										1 1/2"	2"	3"
2PSN38S	2	3/8	310	2	1 1/8	6 3/4	3	345	8	3	3	3

1. MINIMUM HOLE DEPTH IS TO BE VERIFIED BY THE INSPECTOR.
2. MINIMUM EFFECTIVE EMBEDMENT IS AFTER THE ANCHOR HAS BEEN SET.
3. LOAD VALUES SHOWN ARE ALLOWABLE STRESS DESIGN (ASD). CAPACITIES DERIVED IN CONFORMANCE WITH ASCE 7-16 & ACI 318. Ωo=2.0

DUAL ANCHOR DEWALT SNAKE+WITH STRUT SEISMIC BRACE CONNECTION IN METAL DECK SLAB

REGISTERED PROFESSIONAL ENGINEER MARCIN WASAZNIK S-6612 STRUCTURAL STATE OF CALIFORNIA

ISAT
A Division of Tomarco Contractor Specialties
International Seismic Application Technology
14848 Northam Street, La Mirada, CA 90638
877-999-4728 (Toll Free) 714-523-0845 (fax)
www.isatsb.com

Rev. 10
11/21/23

Page
D2.2SN

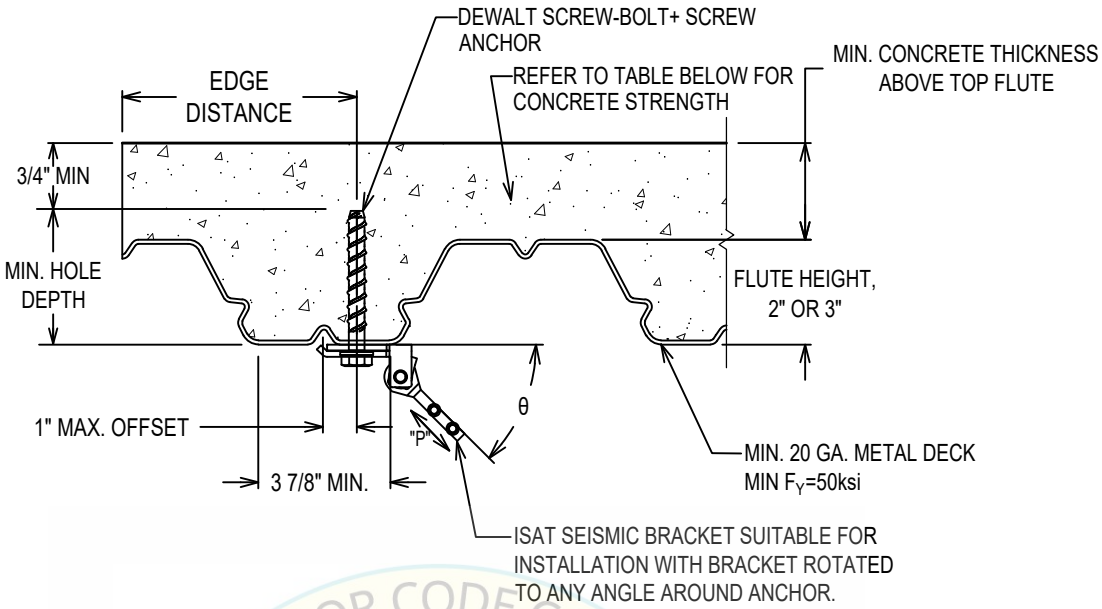

Dewalt Screw-Bolt+ Anchor, Minimum 3000 psi LWC
Seismically Qualified For Anchorage In Cracked Concrete
Seismic Design Categories C, D, E, and F
ICC Report No. ESR-3889 (Dated November 2022), Table 1A, 2, 5, and Fig. 5A

Brace Anchorage Designation	Anchor Diameter (in)	Brace Angle 30°≤ θ ≤ 36° Maximum Brace Load Pmax[4] (lbs)	Brace Angle 36°< θ ≤ 60° Maximum Brace Load Pmax[4] (lbs)	Minimum Hole Depth (in)	Minimum Effective Embed.[1] (in)	Maximum Impact Wrench Torque (ft-lbs)	Minimum Anchor Spacing[2] (in)	Edge Distance (in)	Min. Concrete Thickness Above Top Flute (in)[3] Metal Deck Flute Height 2"	Min. Concrete Thickness Above Top Flute (in)[3] Metal Deck Flute Height 3"
1DSB1411	1/4	311	264	2 7/8	1.94	150	6.75	4 1/2	2 1/2	2 1/2
1DSB3810	3/8	314	284	2 3/8	1.33	300	6.75	4 1/2	2 1/2	2 1/2
1DSB3816	3/8	476	456	3 5/8	2.39	300	7.17	4 1/2	2 1/2	2 1/2
1DSB1220	1/2	910	849	4 5/8	3.23	300	9.69	6	3 3/8	2 1/2
1DSB5824	5/8	1,050	1,000	5 3/8	3.73	700	11.19	8 3/4	4 1/8	3 1/8

1. MINIMUM EFFECTIVE EMBEDMENT IS AFTER THE ANCHOR HAS BEEN SET.
2. SPACING MEASURED ALONG THE FLUTE.
3. BASED ON INSTALLATION IN LOW FLUTE.
4. LOAD VALUES SHOWN ARE ALLOWABLE STRESS DESIGN (ASD). CAPACITIES DERIVED IN CONFORMANCE WITH ASCE 7-16, ACI 318. Ωo=2.0

REVIEWED FOR CODE COMPLIANCE
HCAI
OPM-0403
By William Staehlin
DATE: 01-26-2024
CALIFORNIA BUILDING CODE, 2022

SINGLE DEWALT SCREW-BOLT+ SCREW ANCHOR FOR SEISMIC BRACE CONNECTION IN METAL DECK SLAB

REGISTERED PROFESSIONAL ENGINEER MARCIN WASAZNIK S 6612 STRUCTURAL STATE OF CALIFORNIA

ISAT
A Division of Tomarco Contractor Specialties
International Seismic Application Technology
14848 Northam Street, La Mirada, CA 90638
877-999-4728 (Toll Free) 714-523-0845 (fax)
www.isatsb.com

Rev. 2
11/21/23
Page
D2.1DSB3

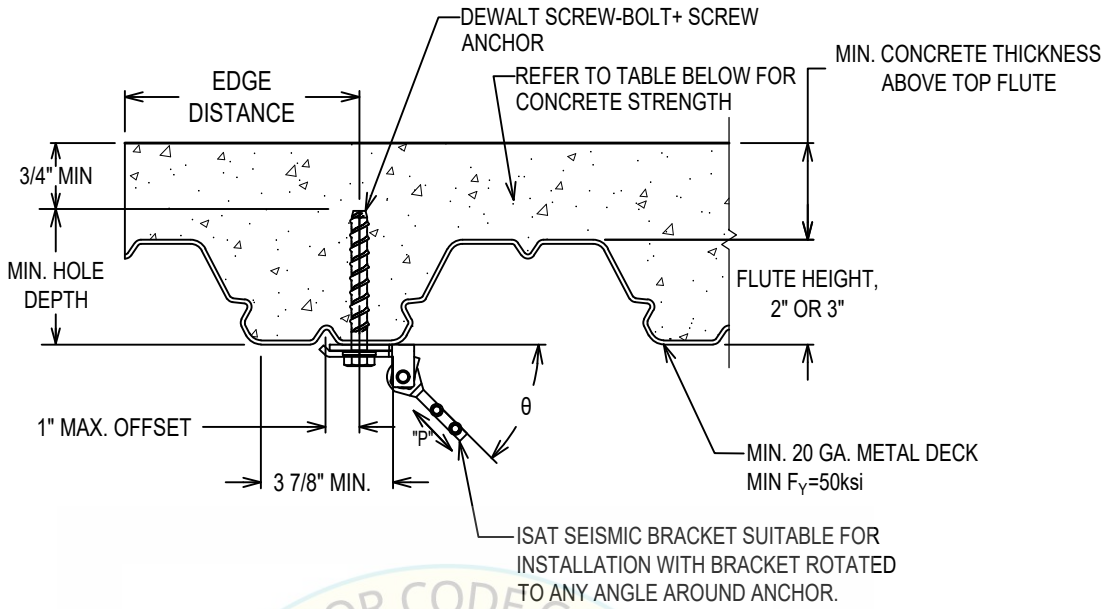

Dewalt Screw-Bolt+ Anchor, Minimum 4000 psi LWC
Seismically Qualified For Anchorage In Cracked Concrete
Seismic Design Categories D, E, and F
ICC Report No. ESR-3889 (Dated November 2022), Table 1A, 2, 5, and Fig. 5A

Brace Anchorage Designation	Anchor Diameter (in)	Brace Angle: 30°≤ θ ≤ 36° Maximum Brace Load Pmax[4] (lbs)	Brace Angle: 36°< θ ≤ 60° Maximum Brace Load Pmax[4] (lbs)	Minimum Hole Depth (in)	Minimum Effective Embed.[1] (in)	Maximum Impact Wrench Torque (ft-lbs)	Minimum Anchor Spacing[2] (in)	Edge Distance (in)	Min. Concrete Thickness Above Top Flute (in)[3] Metal Deck Flute Height 2"	Min. Concrete Thickness Above Top Flute (in)[3] Metal Deck Flute Height 3"
1DSB1411	1/4	328	283	2 7/8	1.94	150	6.75	4 1/2	2 1/2	2 1/2
1DSB3810	3/8	340	316	2 3/8	1.33	300	6.75	4 1/2	2 1/2	2 1/2
1DSB3816	3/8	510	497	3 5/8	2.39	300	7.17	4 1/2	2 1/2	2 1/2
1DSB1220	1/2	979	935	4 5/8	3.23	300	9.69	6	3 3/8	2 1/2
1DSB5824	5/8	1,125	1,093	5 3/8	3.73	700	11.19	8 3/4	4 1/8	3 1/8

1. MINIMUM EFFECTIVE EMBEDMENT IS AFTER THE ANCHOR HAS BEEN SET.
2. SPACING MEASURED ALONG THE FLUTE.
3. BASED ON INSTALLATION IN LOW FLUTE.
4. LOAD VALUES SHOWN ARE ALLOWABLE STRESS DESIGN (ASD). CAPACITIES DERIVED IN CONFORMANCE WITH ASCE 7-16, ACI 318. Ωo=2.0

REVIEWED FOR CODE COMPLIANCE
OPM-0403
BY: William Staehlin
DATE: 01-26-2024
CALIFORNIA BUILDING CODE

SINGLE DEWALT SCREW-BOLT+ SCREW ANCHOR FOR SEISMIC BRACE CONNECTION IN METAL DECK SLAB

REGISTERED PROFESSIONAL ENGINEER MARCIN WASAZNIK S-6612 STRUCTURAL STATE OF CALIFORNIA

ISAT
A Division of Tomarco Contractor Specialties

International Seismic Application Technology
14848 Northam Street, La Mirada, CA 90638
877-999-4728 (Toll Free) 714-523-0845 (fax)
www.isatsb.com

Rev. 2
11/21/23
Page
D2.1DSB4

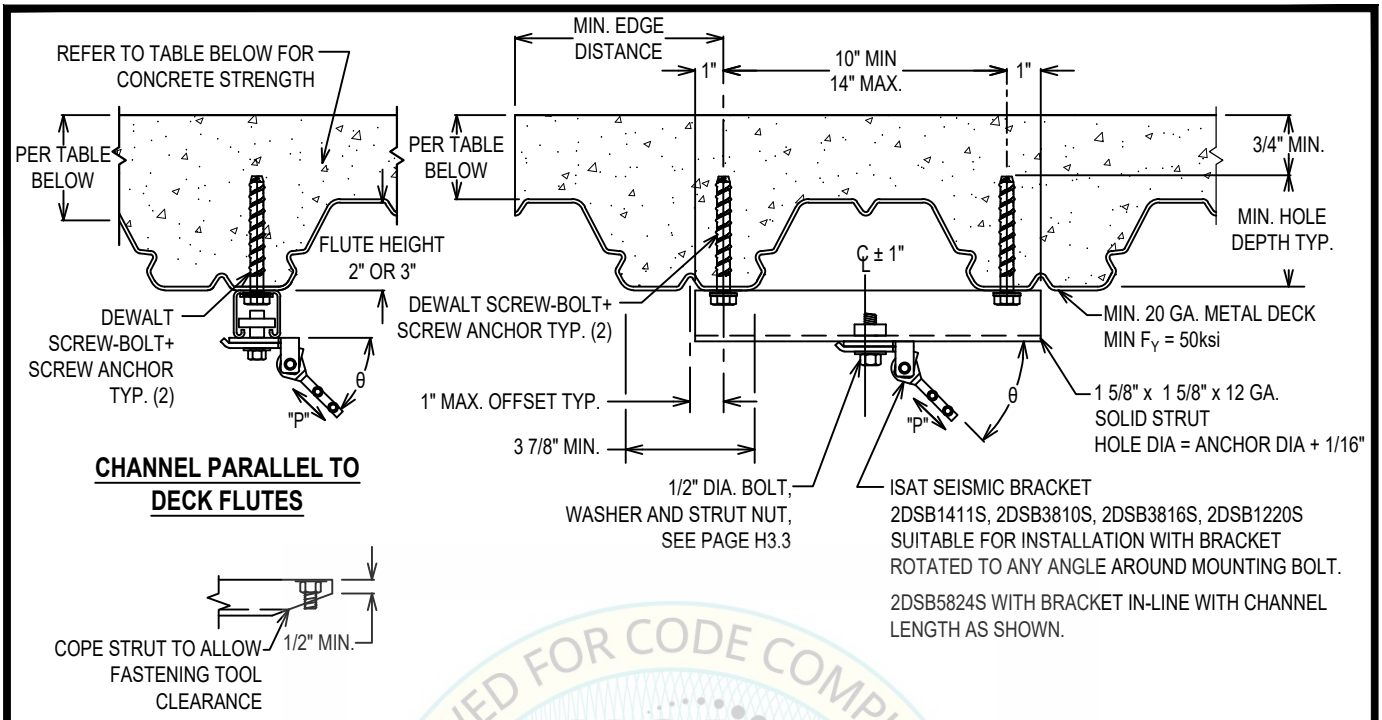

CHANNEL PARALLEL TO DECK FLUTES

DETAIL A

CHANNEL PERPENDICULAR TO DECK FLUTES

REVIEWED FOR CODE COMPLIANCE
HCAi
OPM-0403
BY: William Staehlin
DATE: 01-26-2024
CALIFORNIA BUILDING CODE 2022

Dewalt Screw-Bolt+ Screw Anchor, Minimum 3000 psi LWC
Seismically Qualified For Anchorage In Cracked Concrete
Seismic Design Categories D, E, and F
ICC Report No. ESR-3889 (Dated November 2022), Table 1A, 2, 5, and Fig. 5A

Brace Anchorage Designation	Anchor Diameter (in)	Brace Angle 30°≤ θ ≤ 36° Maximum Brace Load Pmax[4] (lbs)	Brace Angle 36°< θ ≤ 60° Maximum Brace Load Pmax[4] (lbs)	Minimum Hole Depth (in)	Minimum Effective Embed.[1] (in)	Maximum Impact Wrench Torque (ft-lbs)	Minimum Anchor Spacing (in)	Edge Distance (in)	Minimum Concrete Thickness Above Top Flute (in)[3] Metal Deck Flute Height 2"	3"
2DSB1411S	1/4	518	440	2 7/8	1.94	150	6.75	4 1/2	2 1/2	2 1/2
2DSB3810S	3/8	524	473	2 3/8	1.33	300	6.75	4 1/2	2 1/2	2 1/2
2DSB3816S	3/8	794	767	3 5/8	2.39	300	7.17	4 1/2	2 1/2	2 1/2
2DSB1220S	1/2	939	939	4 5/8	3.23	300	9.69	6	3 3/8	2 1/2
2DSB5824S	5/8[2]	1,529	1,529	5 3/8	3.73	700	11.19	8 3/4	4 1/8	3 1/8

1. MINIMUM EFFECTIVE EMBEDMENT IS AFTER THE ANCHOR HAS BEEN SET.
2. USE DETAIL A.
3. BASED ON INSTALLATION IN LOWER FLUTE.
4. LOAD VALUES SHOWN ARE ALLOWABLE STRESS DESIGN (ASD). CAPACITIES DERIVED IN CONFORMANCE WITH ASCE 7-16 AND ACI 318. Ωo=2.0

DUAL ANCHOR DEWALT SCREW-BOLT+ SCREW ANCHOR WITH STRUT SEISMIC BRACE CONNECTION IN METAL DECK SLAB

REGISTERED PROFESSIONAL ENGINEER MARCIN WASAZNIK S-6612 STRUCTURAL STATE OF CALIFORNIA

ISAT
A Division of Tomarco Contractor Specialties
International Seismic Application Technology
14848 Northam Street, La Mirada, CA 90638
877-999-4728 (Toll Free) 714-523-0845 (fax)
www.isatsb.com

Rev. 2
11/21/23
Page
D2.2DSB3

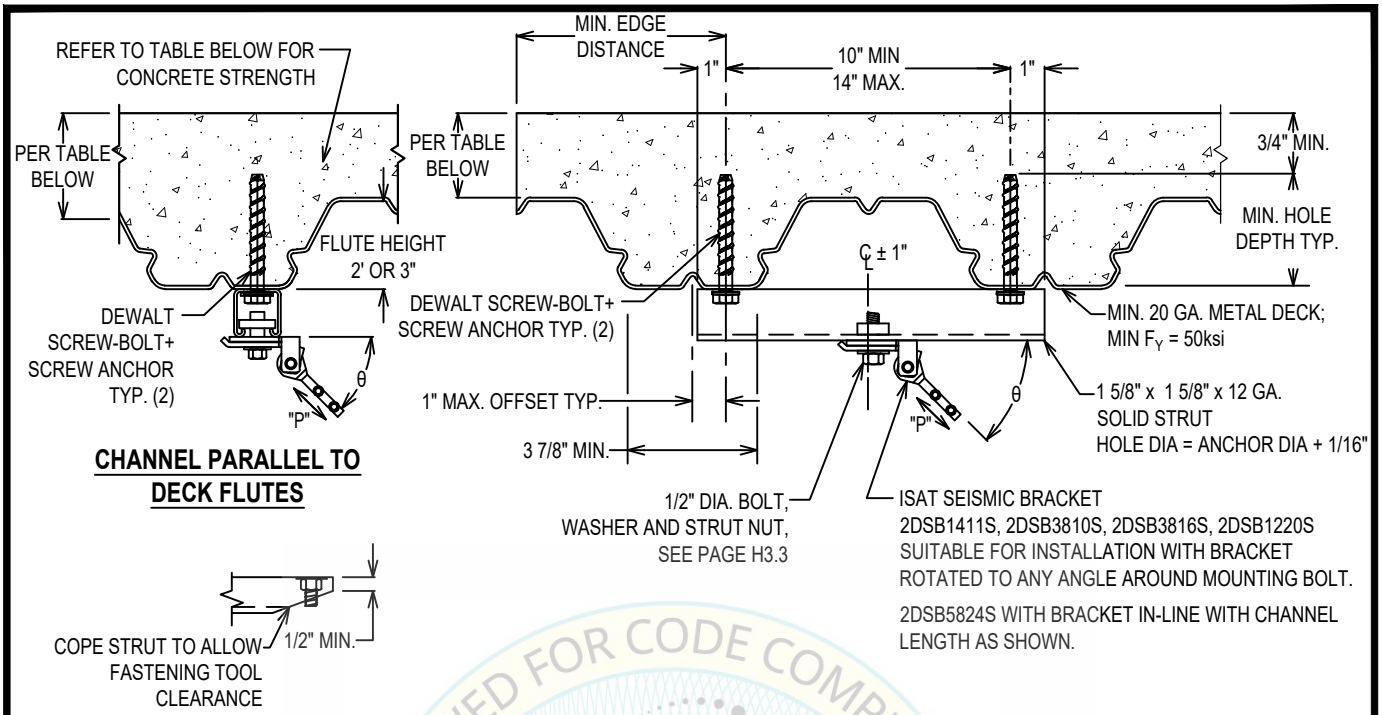

Dewalt Screw-Bolt+ Screw Anchor, Minimum 4000 psi LWC
Seismically Qualified For Anchorage In Cracked Concrete
Seismic Design Categories D, E, and F
ICC Report No. ESR-3889 (Dated November 2022), Table 1A, 2, 5 and Fig. 5A

Brace Anchorage Designation	Anchor Diameter (in)	Brace Angle 30° ≤ θ ≤ 36° Maximum Brace Load Pmax[4] (lbs)	Brace Angle 36° < θ ≤ 60° Maximum Brace Load Pmax[4] (lbs)	Minimum Hole Depth (in)	Minimum Effective Embed.[1] (in)	Maximum Impact Wrench Torque (ft-lbs)	Minimum Anchor Spacing (in)	Edge Distance (in)	Minimum Concrete Thickness Above Top Flute (in)[3] Metal Deck Flute Height 2"	3"
2DSB1411S	1/4	547	472	2 7/8	1.94	150	6.75	4 1/2	2 1/2	2 1/2
2DSB3810S	3/8	567	527	2 3/8	1.33	300	6.75	4 1/2	2 1/2	2 1/2
2DSB3816S	3/8	849	831	3 5/8	2.39	300	7.17	4 1/2	2 1/2	2 1/2
2DSB1220S	1/2	939	939	4 5/8	3.23	300	9.69	6	3 3/8	2 1/2
2DSB5824S	5/8[2]	1,529	1,529	5 3/8	3.73	700	11.19	8 3/4	4 1/8	3 1/8

1. MINIMUM EFFECTIVE EMBEDMENT IS AFTER THE ANCHOR HAS BEEN SET.
2. USE DETAIL A.
3. BASED ON INSTALLATION IN LOWER FLUTE.
4. LOAD VALUES SHOWN ARE ALLOWABLE STRESS DESIGN (ASD). CAPACITIES DERIVED IN CONFORMANCE WITH ASCE 7-16 AND ACI 318.

DUAL ANCHOR DEWALT SCREW-BOLT+ SCREW ANCHOR WITH STRUT SEISMIC BRACE CONNECTION IN METAL DECK SLAB

REGISTERED PROFESSIONAL ENGINEER MARCIN WASAZNIK S 6612 STRUCTURAL STATE OF CALIFORNIA

ISAT
A Division of Tomarco Contractor Specialties

International Seismic Application Technology
14848 Northam Street, La Mirada, CA 90638
877-999-4728 (Toll Free) 714-523-0845 (fax)
www.isatsb.com

Rev. 2
11/21/23
Page
D2.2DSB4

REVIEWED FOR CODE COMPLIANCE HCAi OPM-0403 BY: William Staehlin DATE: 01-26-2024 CALIFORNIA BUILDING CODE, 2022

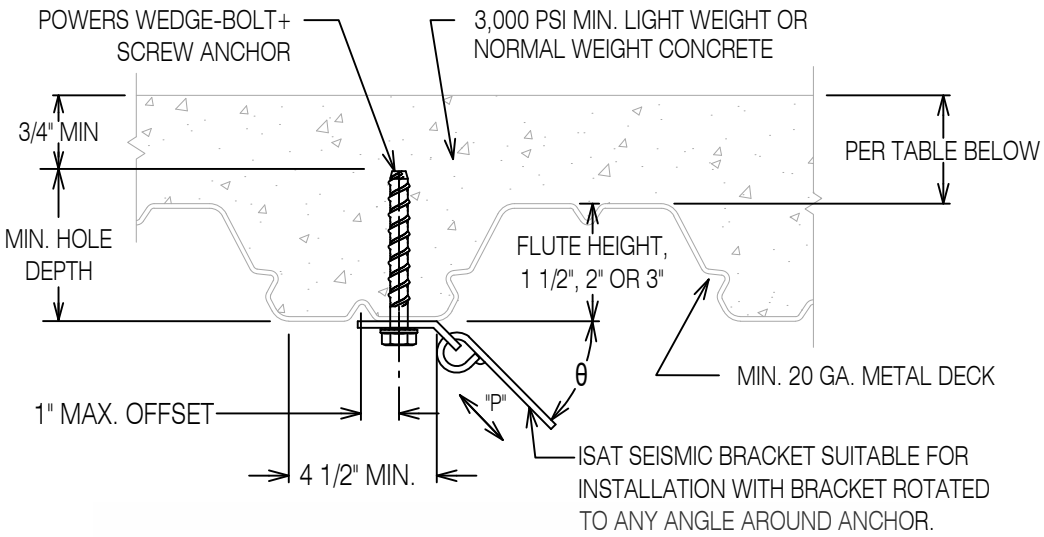

Seismically Qualified For Anchorage In Cracked Concrete
Seismic Design Categories D, E and F
Powers Wedge-Bolt+ Screw Anchor, Minimum 3000 psi LWC
ICC Report No. ESR-2526 (Dated June 2017), Table 1, 2 and 3, and Fig. 5

Brace Anchorage Designation	Anchor Diameter Inch	Brace Angle 30°≤ θ ≤ 36° Maximum Brace Load (P)[4] Lbs.	Brace Angle 36°< θ ≤ 60° Maximum Brace Load (P)[4] Lbs.	Minimum Hole Depth Inch	Minimum Effective Embed.[1] Inch	Maximum Impact Wrench Torque Ft-Lbs.	Minimum Anchor Spacing[2] Inch	Edge Distance Inch	Min. Concrete Thickness Above Top Flute (Inch)[3] Metal Deck Flute Height 1 1/2"	2"	3"
1WB3810	3/8	279	272	2 1/4	1.43	245	6.75	4 1/2	3 1/4	3 1/4	3 1/4
1WB1212	1/2	472	408	2 3/4	1.65	300	6.75	4 1/2	3 1/4	3 1/4	3 1/4
1WB1216	1/2	472	408	4	2.50	300	7.50	6	3 1/4	3 1/4	3 1/4
1WB5820	5/8	620	572	5	3.10	350	9.30	8 3/4	4 1/4	3 3/4	3 1/4

1. MINIMUM EFFECTIVE EMBEDMENT IS AFTER THE ANCHOR HAS BEEN SET.
2. SPACING MEASURED ALONG THE FLUTE.
3. BASED ON INSTALLATION IN LOW FLUTE.
4. LOAD VALUES SHOWN ARE ALLOWABLE STRESS DESIGN (ASD). CAPACITIES DERIVED IN CONFORMANCE WITH ASCE 7-10, PIN 62 & ACI 318-11, Appendix D. Ωo=2.0

REVIEWED FOR CODE COMPLIANCE
OPM-0403
BY: William Staehlin
DATE: 01-26-2024
CALIFORNIA BUILDING CODE, 2022

SINGLE POWERS WEDGE-BOLT+ SCREW ANCHOR FOR SEISMIC BRACE CONNECTION IN METAL DECK SLAB

REGISTERED PROFESSIONAL ENGINEER
MARCIN WASAZNIK
S 6612
STRUCTURAL
STATE OF CALIFORNIA

ISAT
A Division of Tomarco Contractor Specialties

International Seismic Application Technology
14848 Northam Street, La Mirada, CA 90638
877-999-4728 (Toll Free) 714-523-0845 (fax)
www.isatsb.com

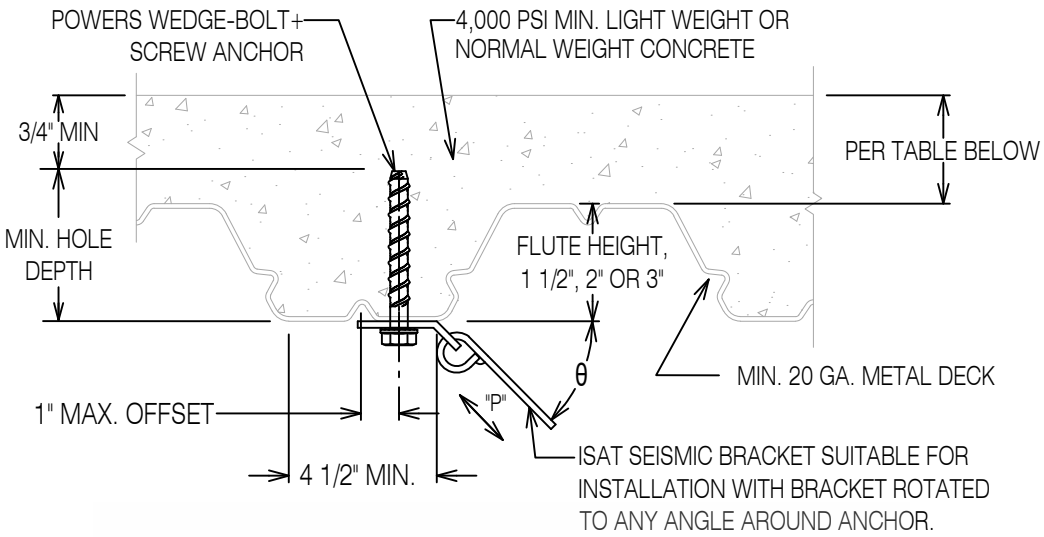

Seismically Qualified For Anchorage In Cracked Concrete
Seismic Design Categories D, E and F
Powers Wedge-Bolt+ Screw Anchor, Minimum 4000 psi LWC
ICC Report No. ESR-2526 (Dated June 2017), Table 1, 2 and 3, and Fig. 5

Brace Anchorage Designation	Anchor Diameter Inch	Brace Angle 30°≤ θ ≤ 36° Maximum Brace Load (P)4 Lbs.	Brace Angle 36°< θ ≤ 60° Maximum Brace Load (P)4 Lbs.	Minimum Hole Depth Inch	Minimum Effective Embed.1 Inch	Maximum Impact Wrench Torque Ft-Lbs.	Minimum Anchor Spacing 2 Inch	Edge Distance Inch	Min. Concrete Thickness Above Top Flute (Inch)3 Metal Deck Flute Height 1 1/2"	2"	3"
1WB3810	3/8	298	294	2 1/4	1.43	245	6.75	4 1/2	3 1/4	3 1/4	3 1/4
1WB1212	1/2	515	457	2 3/4	1.65	300	6.75	4 1/2	3 1/4	3 1/4	3 1/4
1WB1216	1/2	515	457	4	2.50	300	7.50	6	3 1/4	3 1/4	3 1/4
1WB5820	5/8	669	633	5	3.10	350	9.30	8 3/4	4 1/4	3 3/4	3 1/4

1. MINIMUM EFFECTIVE EMBEDMENT IS AFTER THE ANCHOR HAS BEEN SET.
2. SPACING MEASURED ALONG THE FLUTE.
3. BASED ON INSTALLATION IN LOW FLUTE.
4. LOAD VALUES SHOWN ARE ALLOWABLE STRESS DESIGN (ASD). CAPACITIES DERIVED IN CONFORMANCE WITH ASCE 7-10, PIN 62 & ACI 318-11, Appendix D. Ωo=2.0

REVIEWED FOR CODE COMPLIANCE
OPM-0403
BY: William Staehlin
DATE: 01-26-2024
CALIFORNIA BUILDING CODE, 2022

SINGLE POWERS WEDGE-BOLT+ SCREW ANCHOR FOR SEISMIC BRACE CONNECTION IN METAL DECK SLAB

REGISTERED PROFESSIONAL ENGINEER
MARCIN WASAZNIK
S 6612
STRUCTURAL
STATE OF CALIFORNIA

ISAT
A Division of Tomarco Contractor Specialties

International Seismic Application Technology
14848 Northam Street, La Mirada, CA 90638
877-999-4728 (Toll Free) 714-523-0845 (fax)
www.isatsb.com

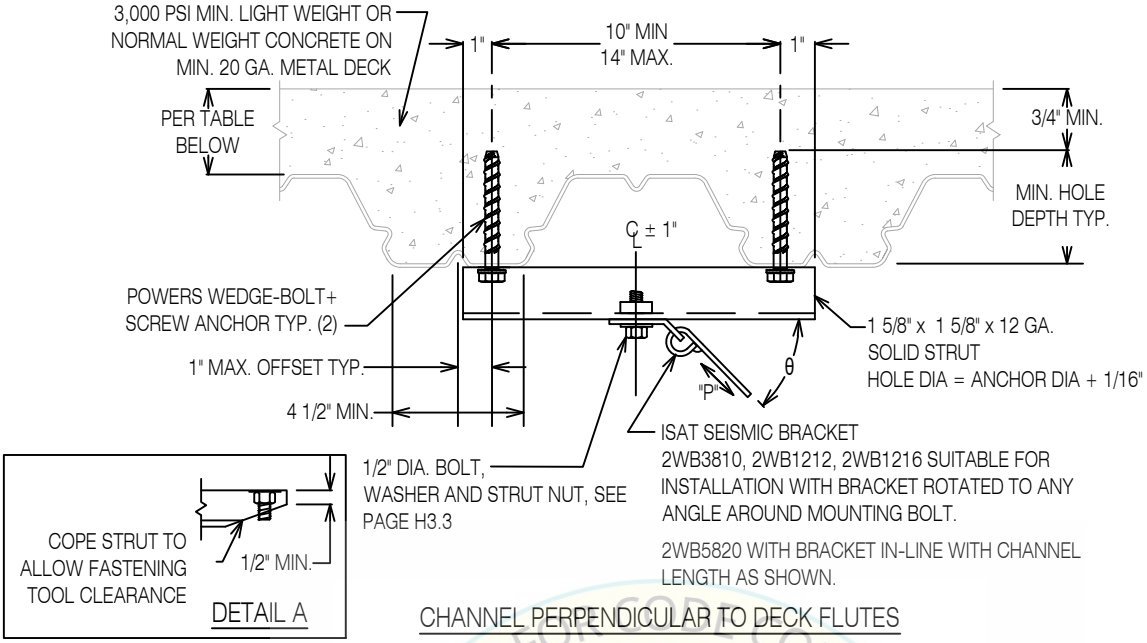

CHANNEL PERPENDICULAR TO DECK FLUTES

Seismically Qualified For Anchorage In Cracked Concrete
Seismic Design Categories D, E and F
Powers Wedge-Bolt+ Screw Anchor, Minimum 3000 psi LWC
ICC Report No. ESR-2526 (Dated June 2017), Table 1, 2 and 3, and Fig. 5

Brace Anchorage Designation	Anchor Diameter Inch	Brace Angle 30° ≤ θ ≤ 36° Maximum Brace Load (P) Lbs.	Brace Angle 36° < θ ≤ 60° Maximum Brace Load (P) Lbs.	Minimum Hole Depth Inch	Minimum Effective Embed.[1] Inch	Maximum Impact Wrench Torque Ft-Lbs.	Minimum Anchor Spacing Inch	Edge Distance Inch	Min. Concrete Thickness Above Top Flute (Inch)[3] Metal Deck Flute Height 1 1/2"	2"	3"
2WB3810S	3/8	465	454	2 1/4	1.43	245	6.75	4 1/2	3 1/4	3 1/4	3 1/4
2WB1212S	1/2	787	680	2 3/4	1.65	300	6.75	4 1/2	3 1/4	3 1/4	3 1/4
2WB1216S	1/2	787	680	4	2.50	300	7.50	6	3 1/4	3 1/4	3 1/4
2WB5820S	5/8[4]	1,062	931	5	3.10	350	9.30	8 3/4	4 1/4	3 3/4	3 1/4

1. MINIMUM EFFECTIVE EMBEDMENT IS AFTER THE ANCHOR HAS BEEN SET.
2. LOAD VALUES SHOWN ARE ALLOWABLE STRESS DESIGN (ASD). CAPACITIES DERIVED IN CONFORMANCE WITH ASCE 7-10, PIN 62 & ACI 318-11, Appendix D. Ωo=2.0
3. BASED ON INSTALLATION IN LOWER FLUTE.
4. USE DETAIL A.

DUAL ANCHOR POWERS WEDGE-BOLT+ SCREW ANCHOR WITH STRUT SEISMIC BRACE CONNECTION IN METAL DECK SLAB

REGISTERED PROFESSIONAL ENGINEER MARCIN WASAZNIK S 6612 STRUCTURAL STATE OF CALIFORNIA

ISAT
A Division of Tomarco Contractor Specialties

International Seismic Application Technology
14848 Northam Street, La Mirada, CA 90638
877-999-4728 (Toll Free) 714-523-0845 (fax)
www.isatsb.com

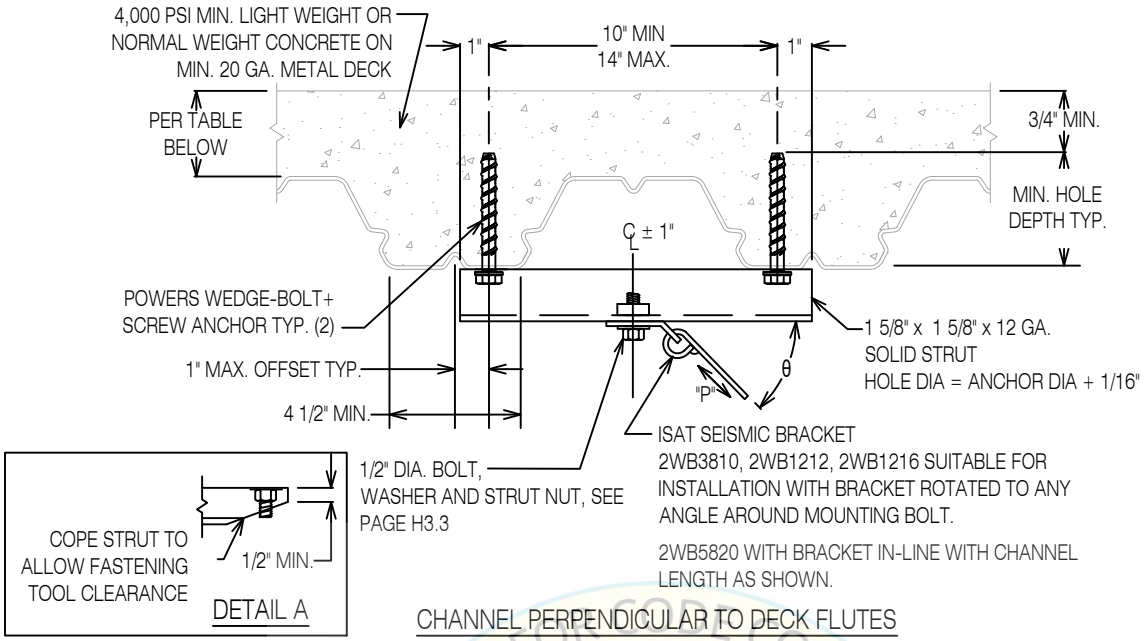

CHANNEL PERPENDICULAR TO DECK FLUTES

REVIEWED FOR CODE COMPLIANCE BY: William Staehlin DATE: 01-26-2024 CALIFORNIA BUILDING CODE, 2022

Seismically Qualified For Anchorage In Cracked Concrete
Seismic Design Categories D, E and F
Powers Wedge-Bolt+ Screw Anchor, Minimum 4000 psi LWC
ICC Report No. ESR-2526 (Dated June 2017), Table 1, 2 and 3, and Fig. 5

Brace Anchorage Designation	Anchor Diameter Inch	Brace Angle 30° ≤ θ ≤ 36° Maximum Brace Load (P) Lbs.	Brace Angle 36° < θ ≤ 60° Maximum Brace Load (P) Lbs.	Minimum Hole Depth Inch	Minimum Effective Embed.[1] Inch	Maximum Impact Wrench Torque Ft-Lbs.	Minimum Anchor Spacing Inch	Edge Distance Inch	Min. Concrete Thickness Above Top Flute (Inch)[3] Metal Deck Flute Height 1 1/2"	2"	3"
2WB3810S	3/8	496	489	2 1/4	1.43	245	6.75	4 1/2	3 1/4	3 1/4	3 1/4
2WB1212S	1/2	859	762	2 3/4	1.65	300	6.75	4 1/2	3 1/4	3 1/4	3 1/4
2WB1216S	1/2	859	762	4	2.50	300	7.50	6	3 1/4	3 1/4	3 1/4
2WB5820S	5/8 [4]	1,156	1,041	5	3.10	350	9.30	8 3/4	4 1/4	3 3/4	3 1/4

1. MINIMUM EFFECTIVE EMBEDMENT IS AFTER THE ANCHOR HAS BEEN SET.
2. LOAD VALUES SHOWN ARE ALLOWABLE STRESS DESIGN (ASD). CAPACITIES DERIVED IN CONFORMANCE WITH ASCE 7-10, PIN 62 & ACI 318-11, Appendix D. Ωo=2.0
3. BASED ON INSTALLATION IN LOWER FLUTE.
4. USE DETAIL A.

DUAL ANCHOR POWERS WEDGE-BOLT+ SCREW ANCHOR WITH STRUT SEISMIC BRACE CONNECTION IN METAL DECK SLAB

REGISTERED PROFESSIONAL ENGINEER MARCIN WASAZNIK S 6612 STRUCTURAL STATE OF CALIFORNIA

ISAT
A Division of Tomarco Contractor Specialties

International Seismic Application Technology
14848 Northam Street, La Mirada, CA 90638
877-999-4728 (Toll Free) 714-523-0845 (fax)
www.isatsb.com

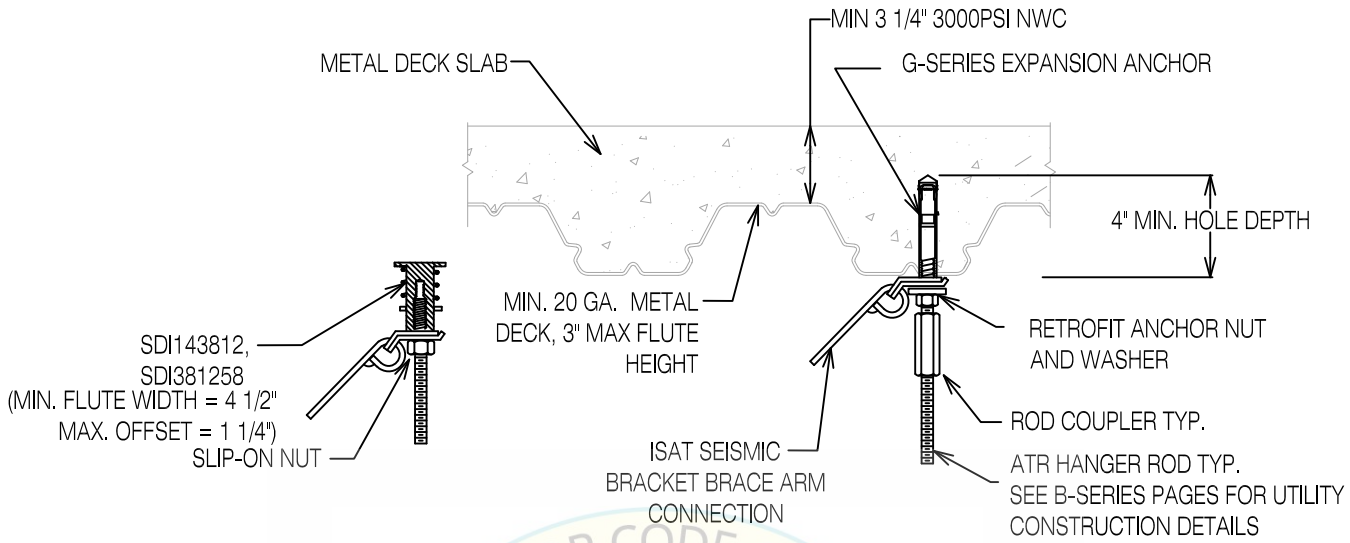

Max. Seismic Design Acceleration G [1]	Max. Utility Trapeze Load Lbs./Ft.	Max. Vertical Support Spacing Ft.	Transverse Brace Spacing Ft	Longitudinal Brace Spacing Ft
0.20	40	10	40	60
0.40	20	10	40	60
0.60	20	10	40	60
0.60	30	10	20	30
0.80	20	10	20	30
1.00	20	10	20	30

Maximum Equipment Weight - Lbs. [3]				
G = 0.20	G = 0.40	G = 0.60	G = 0.80	G = 1.00
750	600	500	400	350

1. SEISMIC G-FORCE AT WORKING LOADS.
2. DESIGN IS BASED ON 2013 CBC & REFERENCED STANDARDS AND INCLUDES PROVISIONS FOR VERTICAL SEISMIC ACCELERATIONS AND A FORCE INCREASE FOR ANCHORAGE INTO CONCRETE FROM ASCE 7 SECTION 13.4.2.
3. EQUIPMENT SUSPENDED BY ONLY TWO RODS IS LIMITED TO 100 POUNDS FOR ALL DESIGN ACCELERATIONS.

REVIEWED FOR CODE COMPLIANCE
HCAi
OPM-0403
By: William Staehlin
DATE: 01-26-2024
CALIFORNIA BUILDING CODE, 2022

TRAPEZE LONGITUDINAL BRACE CONNECTION TO VERTICAL SUPPORT ROD

REGISTERED PROFESSIONAL ENGINEER MARCIN WASAZNIK S 6612 STRUCTURAL STATE OF CALIFORNIA

ISAT
A Division of Tomarco Contractor Specialties

International Seismic Application Technology
14848 Northam Street, La Mirada, CA 90638
877-999-4728 (Toll Free) 714-523-0845 (fax)
www.isatsb.com

Rev. 7
01/24/18

Page
D2.6

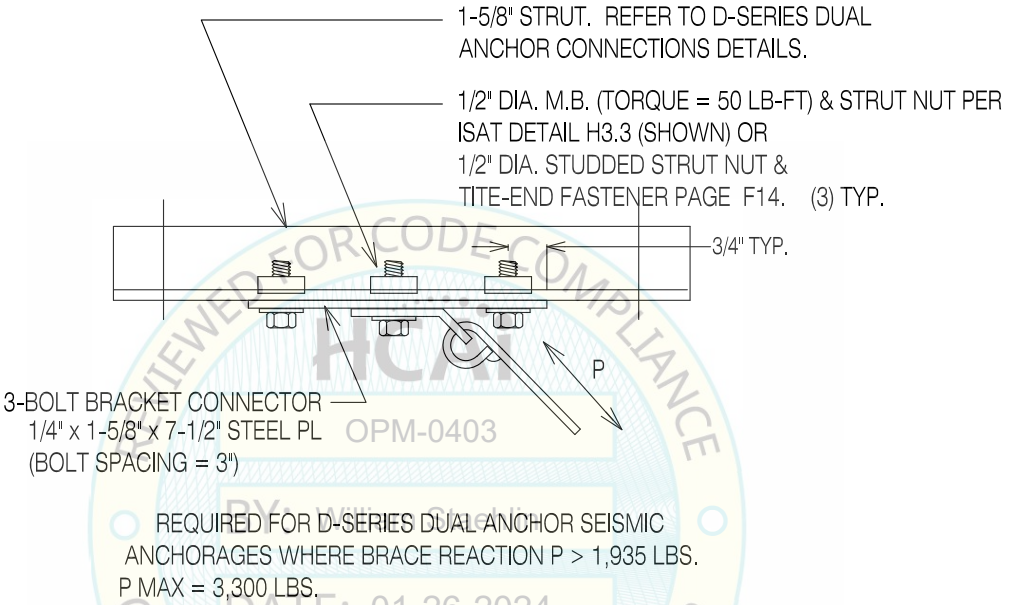

REQUIRED FOR D-SERIES DUAL ANCHOR SEISMIC ANCHORAGES WHERE BRACE REACTION P > 1,935 LBS.
P MAX = 3,300 LBS.

REVIEWED FOR CODE COMPLIANCE
HCAI
OPM-0403
BY: William Staehlin
DATE: 01-26-2024
CALIFORNIA BUILDING CODE, 2022

3-BOLT BRACKET CONNECTOR

REGISTERED PROFESSIONAL ENGINEER
MARCIN WASAZNIK
S 6612
STRUCTURAL
STATE OF CALIFORNIA

ISAT
A Division of Tomarco Contractor Specialties

International Seismic Application Technology
14848 Northam Street, La Mirada, CA 90638
877-999-4728 (Toll Free) 714-523-0845 (fax)
www.isatsb.com

Rev. 7
01/24/18

Page
D2.7

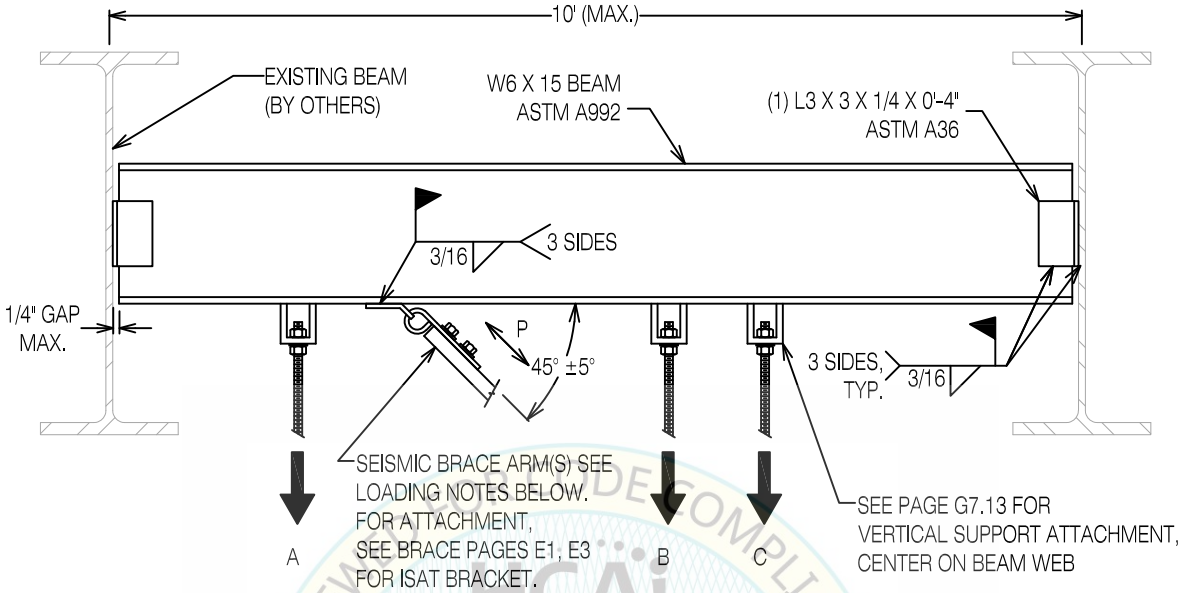

HCAi
OPM-0403
BY: William Staehlin
REVIEWED FOR CODE COMPLIANCE
CALIFORNIA BUILDING CODE 2019

STRUCTURAL ENGINEER OF RECORD TO VERIFY ADEQUACY OF FLOOR/ROOF BEAMS AND DIAPHRAM FOR THE ACTUAL LOADING COMBINATIONS.

NO ATTACHMENTS IN PROTECTED ZONES AS DEFINED IN AISC 341

MAXIMUM LOADING EXAMPLES (VERTICAL SUPPORTS AND SEISMIC BRACE ARMS):

1). MAXIMUM (COMBINED, A+B+C) VERTICAL SUPPORT LOADING = 5,000 LBS, MAXIMUM (COMBINED) SEISMIC BRACE LOAD = 6,000 LBS PARALLEL TO W6 LENGTH (AS SHOWN).

2). MAXIMUM (COMBINED, A+B+C) VERTICAL SUPPORT LOADING = 500 LBS, MAXIMUM (COMBINED) SEISMIC BRACE LOAD = 2,000 LBS AT ANY ANGLE.

WIDE FLANGED BEAM SUPPLEMENTAL STEEL AS SEISMIC ANCHORAGE

REGISTERED PROFESSIONAL ENGINEER
MARCIN WASAZNIK
S 6612
STRUCTURAL
STATE OF CALIFORNIA

ISAT
A Division of Tomarco Contractor Specialties

International Seismic Application Technology
14848 Northam Street, La Mirada, CA 90638
877-999-4728 (Toll Free) 714-523-0845 (fax)
www.isatsb.com

Rev. 7
02/14/18

Page
D3.1

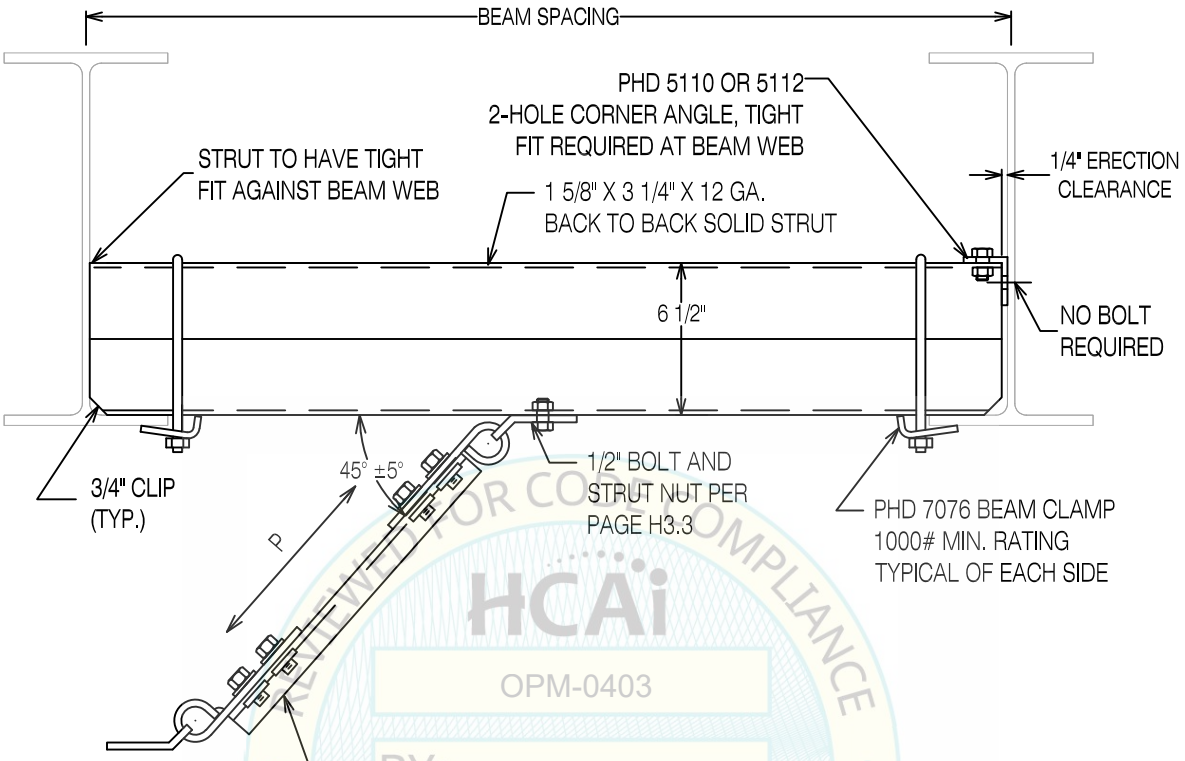

ISAT RIGID OR CABLE BRACE ARM ASSEMBLY
(PER PAGE E1 OR E3 AS APPLICABLE).
INSTALL IN LINE WITH CHANNEL AS SHOWN

REVIEWED FOR CODE COMPLIANCE
HCAi
OPM-0403
BY: William Staehlin
DATE: 01-26-2024
CALIFORNIA BUILDING CODE, 2022

SEISMIC BRACE SUPPORT & ATTACHMENT LOADING NOTES:

1. FOR 10'-0" BEAM SPACING, PMAX = 650#
2. FOR 8'-0" BEAM SPACING , PMAX = 850#
3. FOR 6'-0" BEAM SPACING , PMAX = 1700#

NO ATTACHMENTS IN PROTECTED
ZONE AS DEFINED IN AISC 341

1 5/8" X 3 1/4" BACK TO BACK STRUT IN-LINE BRACE ARM CONNECTION DETAIL

REGISTERED PROFESSIONAL ENGINEER
MARCIN WASAZNIK
S 6612
STRUCTURAL
STATE OF CALIFORNIA

ISAT
A Division of Tomarco Contractor Specialties

International Seismic Application Technology
14848 Northam Street, La Mirada, CA 90638
877-999-4728 (Toll Free) 714-523-0845 (fax)
www.isatsb.com

Rev. 7
02/14/18

Page
D3.2

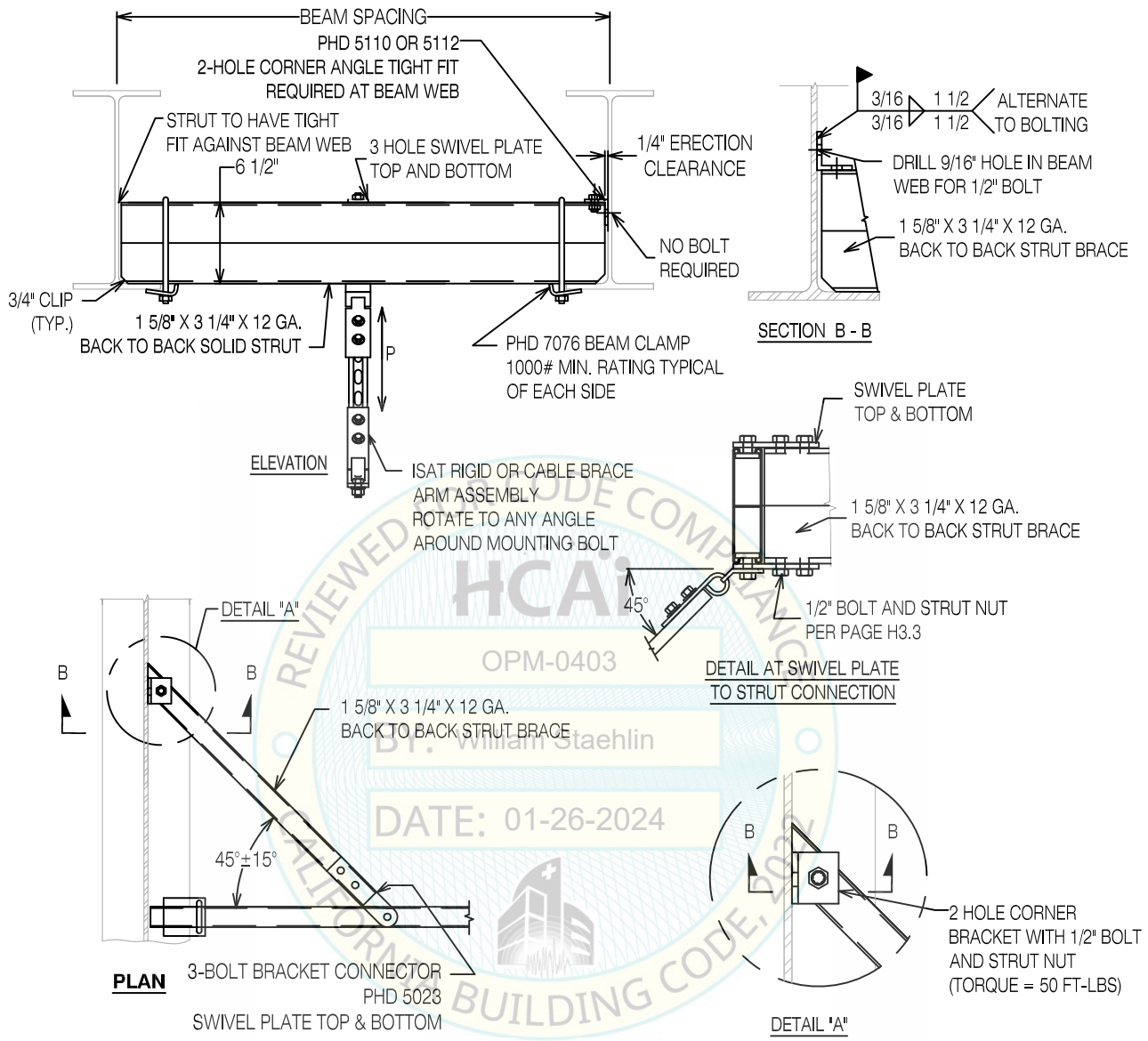

REVIEWED FOR CODE COMPLIANCE
HCAi
OPM-0403
BY: William Staehlin
DATE: 01-26-2024
CALIFORNIA BUILDING CODE, 2022

SEISMIC BRACE SUPPORT & ATTACHMENT LOADING NOTES:

1. FOR 10'-0" MAX. BEAM SPACING, PMAX = 1000# AT ANY ANGLE

NO ATTACHMENTS IN PROTECTED ZONE AS DEFINED IN AISC 341

1 5/8" X 3 1/4" BACK TO BACK STRUT WITH STRUT BRACE SEISMIC BRACE AT ANY ANGLE

REGISTERED PROFESSIONAL ENGINEER
MARCIN WASAZNIK
S 6612
STRUCTURAL
STATE OF CALIFORNIA

ISAT
A Division of Tomarco Contractor Specialties
International Seismic Application Technology
14848 Northam Street, La Mirada, CA 90638
877-999-4728 (Toll Free) 714-523-0845 (fax)
www.isatsb.com

Rev. 7
02/14/18

Page
D3.3

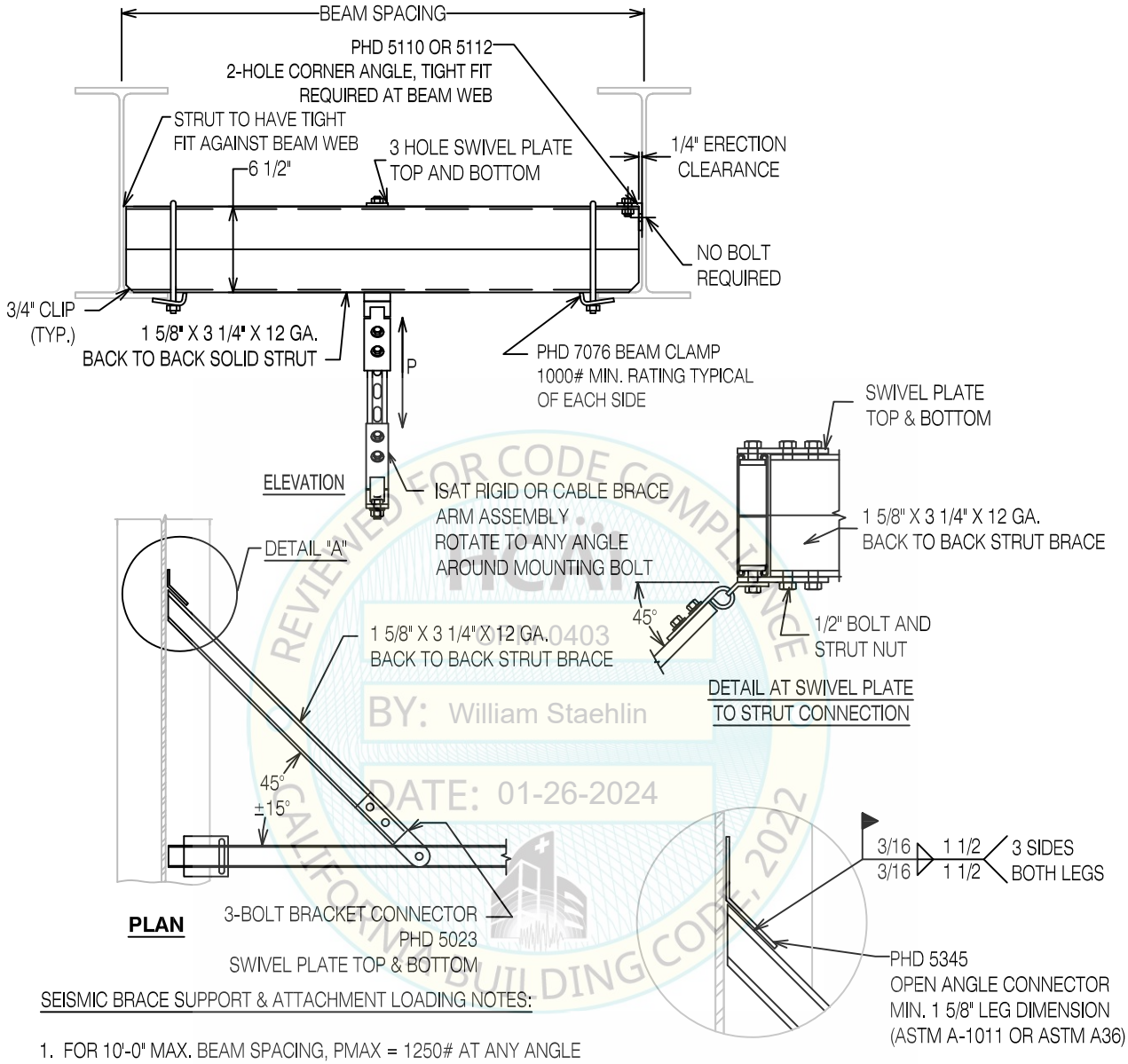

REVIEWED FOR CODE COMPLIANCE
OPM-0403
BY: William Staehlin
DATE: 01-26-2024
CALIFORNIA BUILDING CODE, 2022

SEISMIC BRACE SUPPORT & ATTACHMENT LOADING NOTES:

1. FOR 10'-0" MAX. BEAM SPACING, PMAX = 1250# AT ANY ANGLE
2. FOR 8'-0" MAX. BEAM SPACING, PMAX = 1800# AT ANY ANGLE
3. FOR 6'-0" MAX. BEAM SPACING, PMAX = 2500# AT ANY ANGLE

NO ATTACHMENTS IN PROTECTED ZONE AS DEFINED IN AISC 341

1 5/8" X 3 1/4" BACK TO BACK STRUT WITH STRUT BRACE SEISMIC BRACE AT ANY ANGLE- WELDED CONNECTION TO BEAM

REGISTERED PROFESSIONAL ENGINEER
MARCIN WASAZNIK
S 6612
STRUCTURAL
STATE OF CALIFORNIA

ISAT
A Division of Tomarco Contractor Specialties
International Seismic Application Technology
14848 Northam Street, La Mirada, CA 90638
877-999-4728 (Toll Free) 714-523-0845 (fax)
www.isatsb.com

Rev. 7
02/22/18

Page
D3.3.1

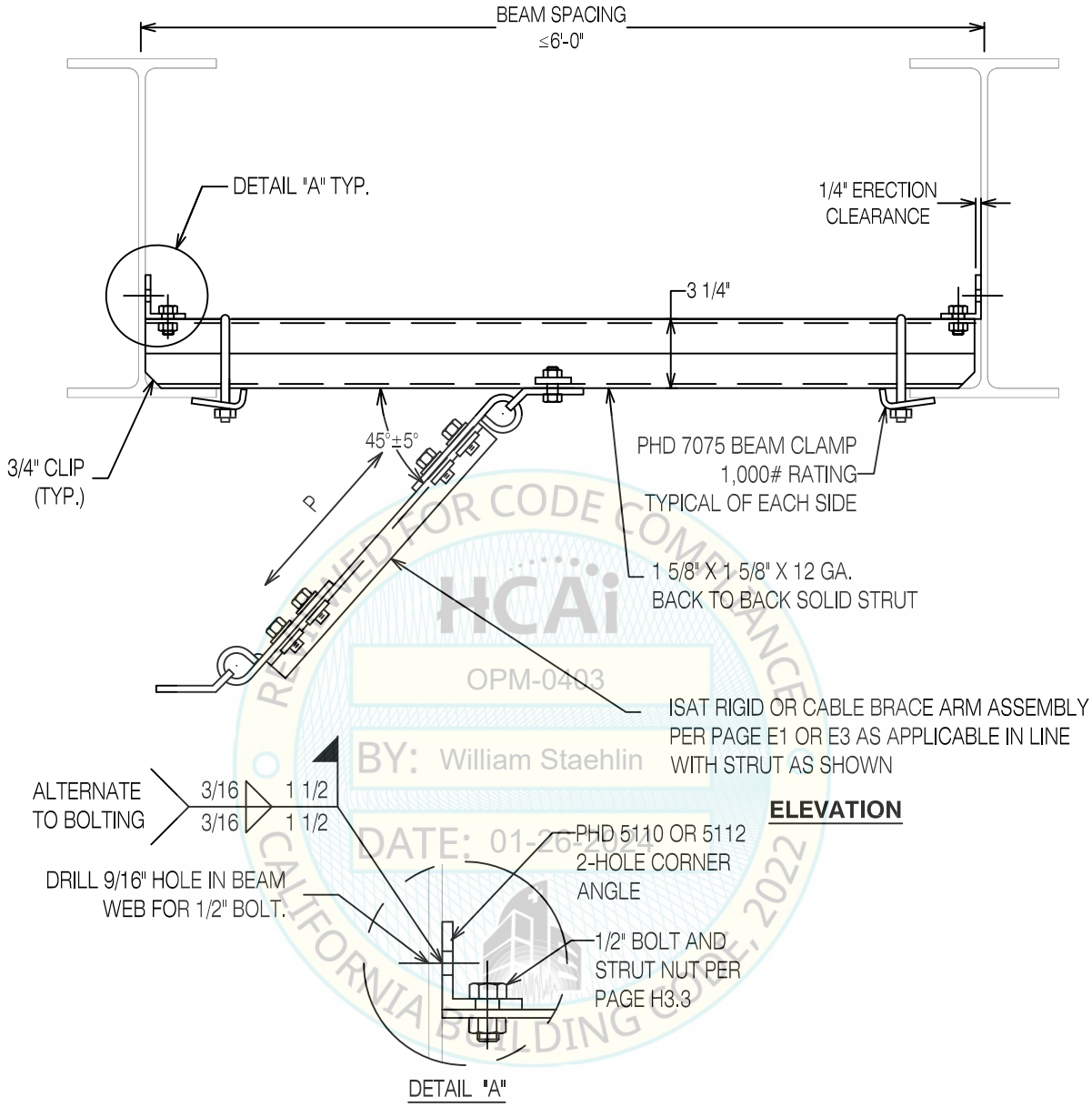

REVIEWED FOR CODE COMPLIANCE
HCAi
OPM-0403
BY: William Staehlin
DATE: 01-26-2024
CALIFORNIA BUILDING CODE, 2022

SEISMIC BRACE SUPPORT & ATTACHMENT LOADING NOTES:

1. FOR 6'-0" BEAM SPACING , PMAX = 500#

NO ATTACHMENTS IN PROTECTED ZONE AS DEFINED IN AISC 341

1 5/8" X 1 5/8" BACK TO BACK STRUT IN-LINE BRACE ARM CONNECTION DETAIL

REGISTERED PROFESSIONAL ENGINEER
MARCIN WASAZNIK
S 6612
STRUCTURAL
STATE OF CALIFORNIA

ISAT
A Division of Tomarco Contractor Specialties

International Seismic Application Technology
14848 Northam Street, La Mirada, CA 90638
877-999-4728 (Toll Free) 714-523-0845 (fax)
www.isatsb.com

Rev. 7
02/14/18

Page
D3.4

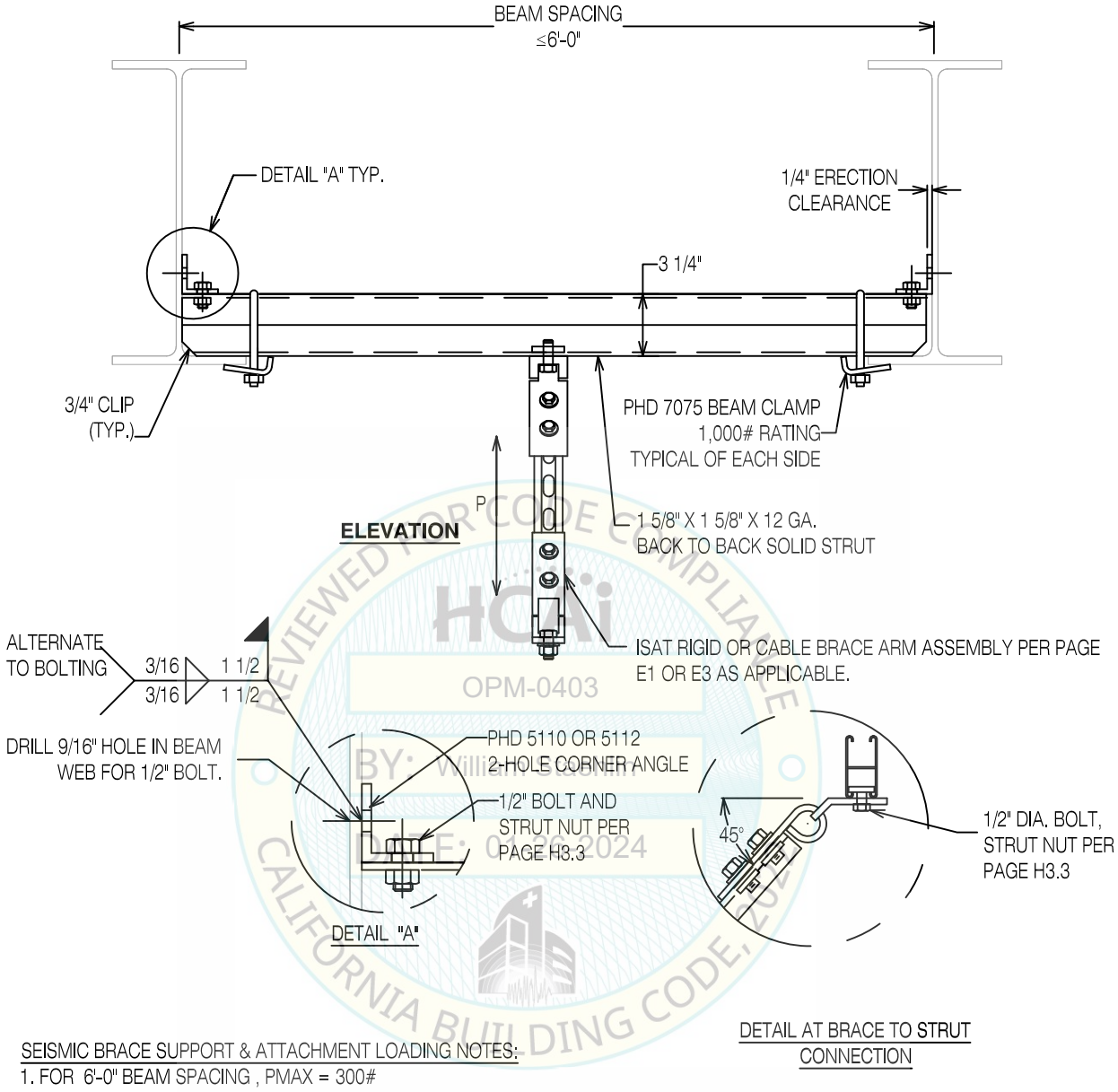

REVIEWED FOR CODE COMPLIANCE
HCAi
OPM-0403
BY: William Staehlin
DATE: 01/26/2024
CALIFORNIA BUILDING CODE, 2022

SEISMIC BRACE SUPPORT & ATTACHMENT LOADING NOTES:

1. FOR 6'-0" BEAM SPACING , PMAX = 300#

NO ATTACHMENTS IN PROTECTED ZONE AS DEFINED IN AISC 341

1 5/8" X 1 5/8" BACK TO BACK STRUT WITH BRACE ARM

REGISTERED PROFESSIONAL ENGINEER
MARCIN WASAZNIK
S 6612
STRUCTURAL
STATE OF CALIFORNIA

ISAT
A Division of Tomarco Contractor Specialties
International Seismic Application Technology
14848 Northam Street, La Mirada, CA 90638
877-999-4728 (Toll Free) 714-523-0845 (fax)
www.isatsb.com

Rev. 7
02/14/18

Page
D3.5

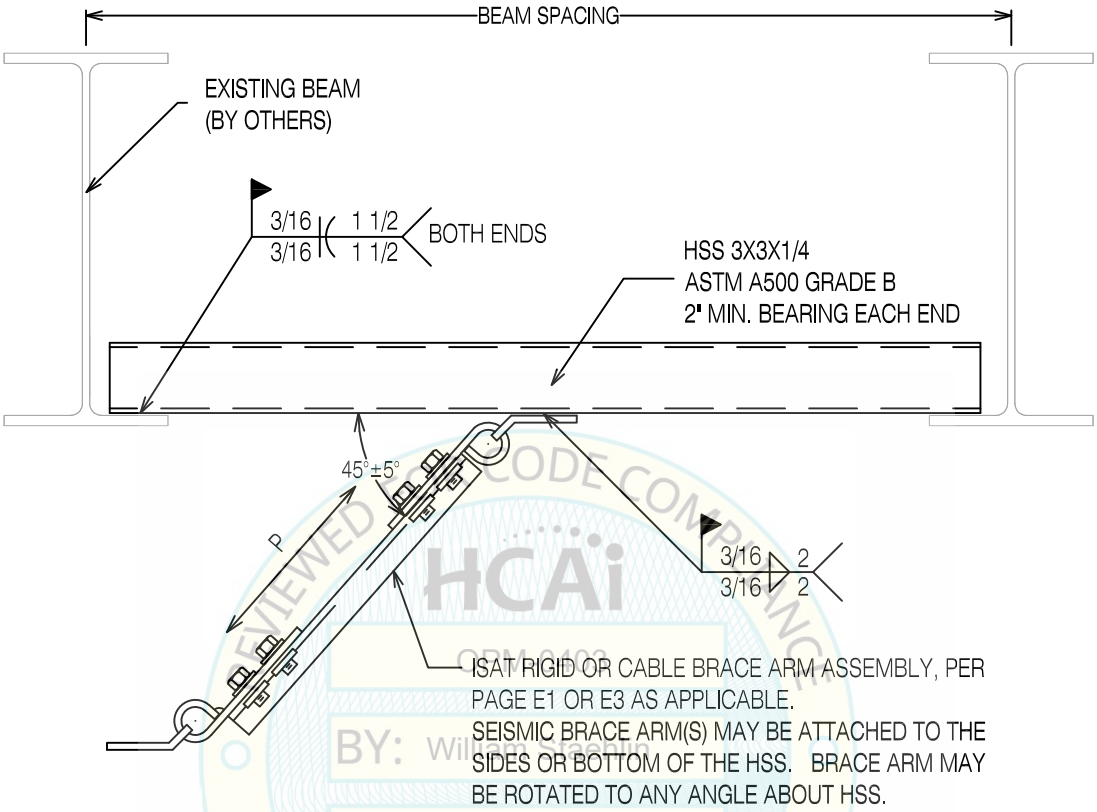

REVIEWED FOR CODE COMPLIANCE
HCAi
OPM-0403
BY: William Staehlin
DATE: 01-26-2024
CALIFORNIA

SEISMIC BRACE SUPPORT & ATTACHMENT LOADING NOTES:

1. FOR 12'-6" BEAM SPACING, PMAX = 1250#
2. FOR 10'-0" BEAM SPACING, PMAX = 1500#
3. FOR 8'-0" BEAM SPACING , PMAX = 1800#
4. FOR 6'-0" BEAM SPACING , PMAX = 2400#

STRUCTURAL ENGINEER OF RECORD IS TO VERIFY THE ADEQUACY OF THE EXISTING BEAMS AND DIAPHRAGM.

NO ATTACHMENTS IN PROTECTED ZONES AS DEFINED IN AISC 341

HSS 3X3 SUPPLEMENTAL STEEL SEISMIC BRACE ARM CONNECTION DETAIL

REGISTERED PROFESSIONAL ENGINEER
MARCIN WASAZNIK
S 6612
STRUCTURAL
STATE OF CALIFORNIA

ISAT
A Division of Tomarco Contractor Specialties
International Seismic Application Technology
14848 Northam Street, La Mirada, CA 90638
877-999-4728 (Toll Free) 714-523-0845 (fax)
www.isatsb.com

Rev. 7
02/14/18

Page
D3.6

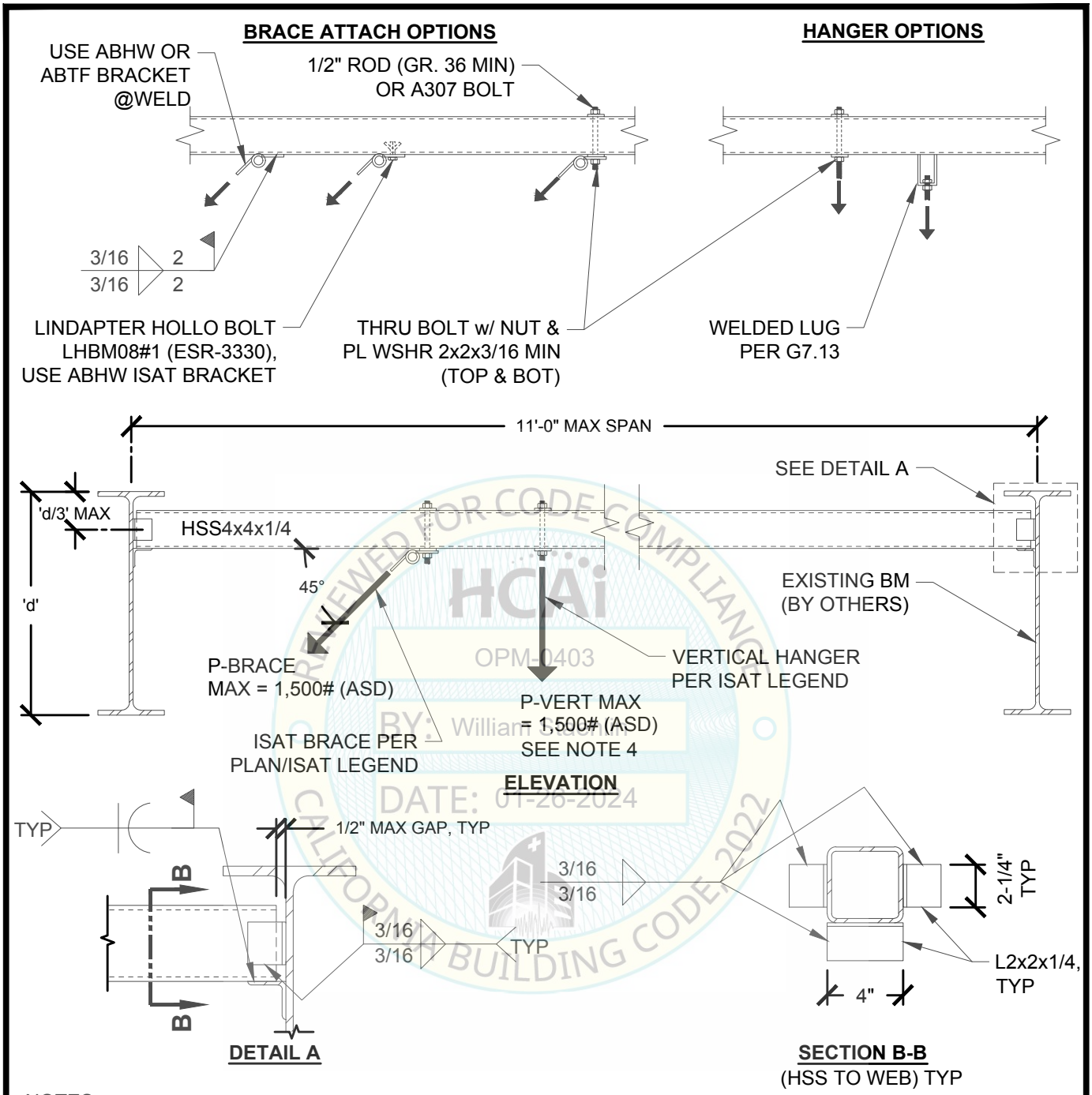

REVIEWED FOR CODE COMPLIANCE
HCAi
OPM-0403
BY: William Staehlin
DATE: 01-26-2024
CALIFORNIA BUILDING CODE 2022

NOTES:

1. NO ATTACHMENT IN PROTECTED ZONES AS DEFINED IN AISC 341.
2. HANGERS AND BRACES MAY BE INSTALLED ANYWHERE ALONG THE HSS MEMBER, ON THE FACE OF THE HSS AND AT ANY ANGLE IN PLAN TO HSS. MULTIPLE HANGERS AND BRACES MAY BE INSTALLED AS LONG AS THE SUM OF LOADS IS < MAX SPECIFIED.
3. P-BRACE MAX AND P-GRAV MAX MAY OCCUR SIMULTANEOUSLY, BE COMBINED.
4. IF THERE ARE VERTICAL LOADS ONLY - P-VERT = 2,500 # MAX (ASD).
5. ANGLES TO BE GR.36 MIN AND HSS TO BE A500 GR.B OR GR.C.

Approval From Engineer of Record Required Prior To Installation

HSS SUPPLEMENTAL STEEL

REGISTERED PROFESSIONAL ENGINEER MARCIN WASAZNIK S 6612 STRUCTURAL STATE OF CALIFORNIA

ISAT
A Division of Tomarco Contractor Specialties
International Seismic Application Technology
14848 Northam Street, La Mirada, CA 90638
877-999-4728 (Toll Free) 714-523-0845 (fax)
www.isatsb.com

Rev. 0
12/13/23

Page
D3.7

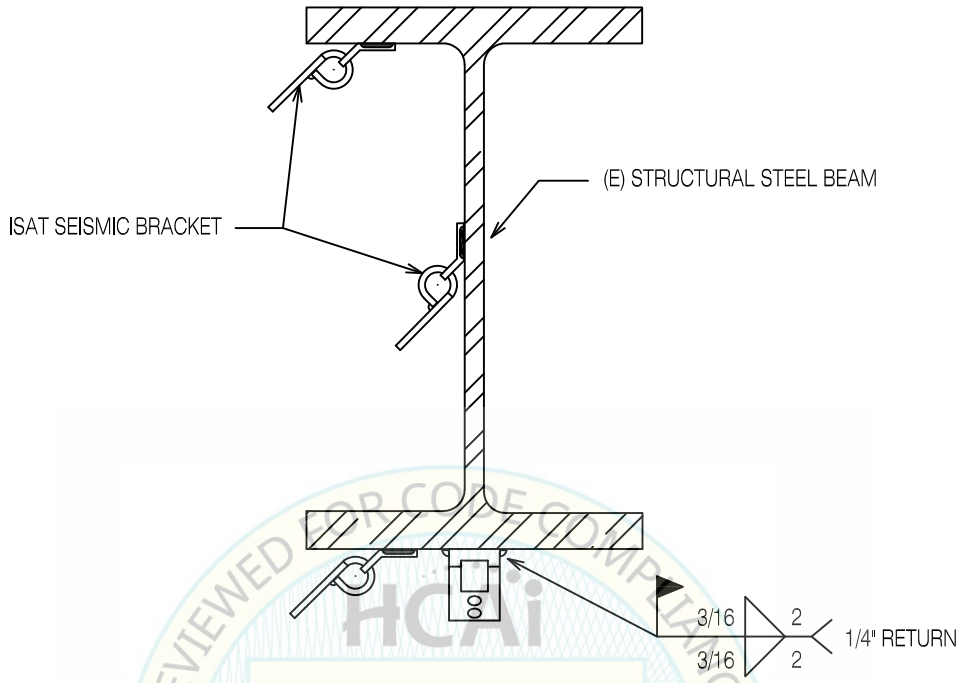

SUBMIT SEISMIC BRACE LOADS AND OBTAIN APPROVAL FROM ENGINEER OF RECORD BEFORE WELDING TO STRUCTURAL STEEL

ISAT BRACKET	MAX ALLOWABLE BRACE LOAD @ 45 DEGREE BRACE ANGLE Lbs
ABHW12	2,200
ABHWS12	2,030
ABHWX12	3,750

REVIEWED FOR CODE COMPLIANCE
HCAi
OPM-0403
DATE: 01-26-2024
CALIFORNIA BUILDING CODE, 2022

WELDED BRACKET CONNECTION
STRUCTURAL STEEL BEAM OR CHANNEL

REGISTERED PROFESSIONAL ENGINEER
MARCIN WASAZNIK
S 6612
STRUCTURAL
STATE OF CALIFORNIA

ISAT
A Division of Tomarco Contractor Specialties
International Seismic Application Technology
14848 Northam Street, La Mirada, CA 90638
877-999-4728 (Toll Free) 714-523-0845 (fax)
www.isatsb.com

Rev. 7
09/21/18

Page
D4.1

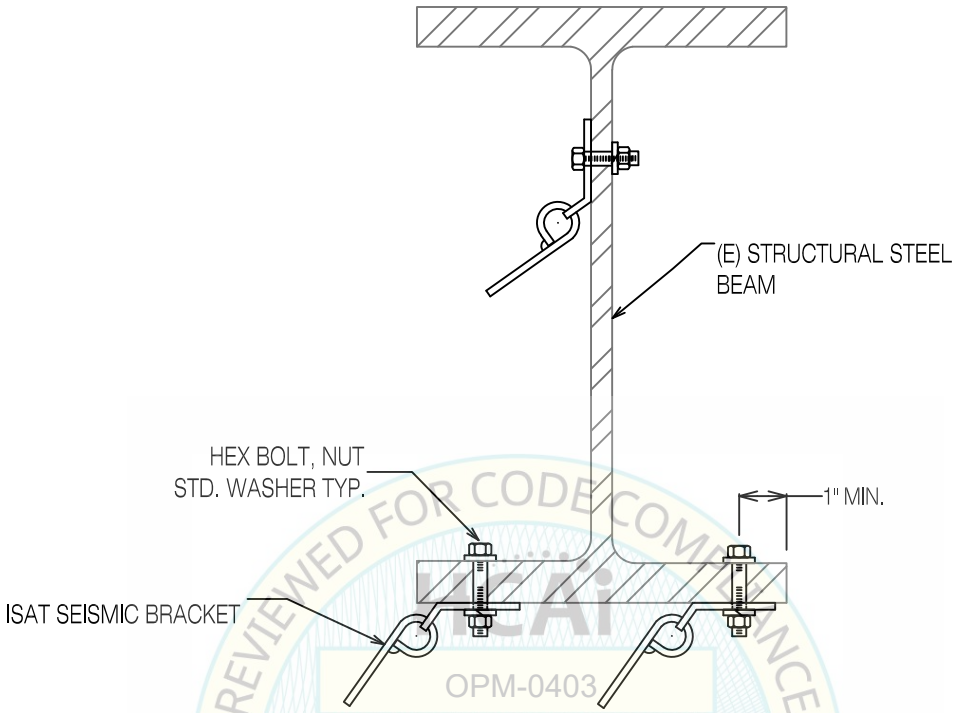

SUBMIT SEISMIC REACTION LOADS AND OBTAIN APPROVAL FROM ENGINEER OF RECORD BEFORE BOLTING TO STRUCTURAL STEEL

NO ATTACHMENTS IN PROTECTED ZONES AS DEFINED IN AISC 341

ISAT BRACKET	MAX. ALLOWABLE BRACE LOAD @ 45 DEGREE BRACE ANGLE		HOLE DIA. Inch
	Lbs	Inch	
ABHW12	2,200	MIN 1/2 DIA. BOLT	9/16
ABHWS12	2,030	MIN 1/2 DIA. BOLT	9/16
ABHWX12	2,900	MIN 1/2 DIA. BOLT	9/16
RCTF12	2,045	MIN 1/2 DIA. BOLT	9/16

REVIEWED FOR CODE COMPLIANCE
HCAi
OPM-0403
BY: William Staehlin
DATE: 01/26/2024
CALIFORNIA BUILDING CODE, 2022

BOLTED BRACKET CONNECTION
STRUCTURAL STEEL BEAM OR CHANNEL

REGISTERED PROFESSIONAL ENGINEER MARCIN WASAZNIK S 6612 STRUCTURAL STATE OF CALIFORNIA

ISAT
A Division of Tomarco Contractor Specialties

International Seismic Application Technology
14848 Northam Street, La Mirada, CA 90638
877-999-4728 (Toll Free) 714-523-0845 (fax)
www.isatsb.com

Rev. 7
09/21/18

Page
D4.2

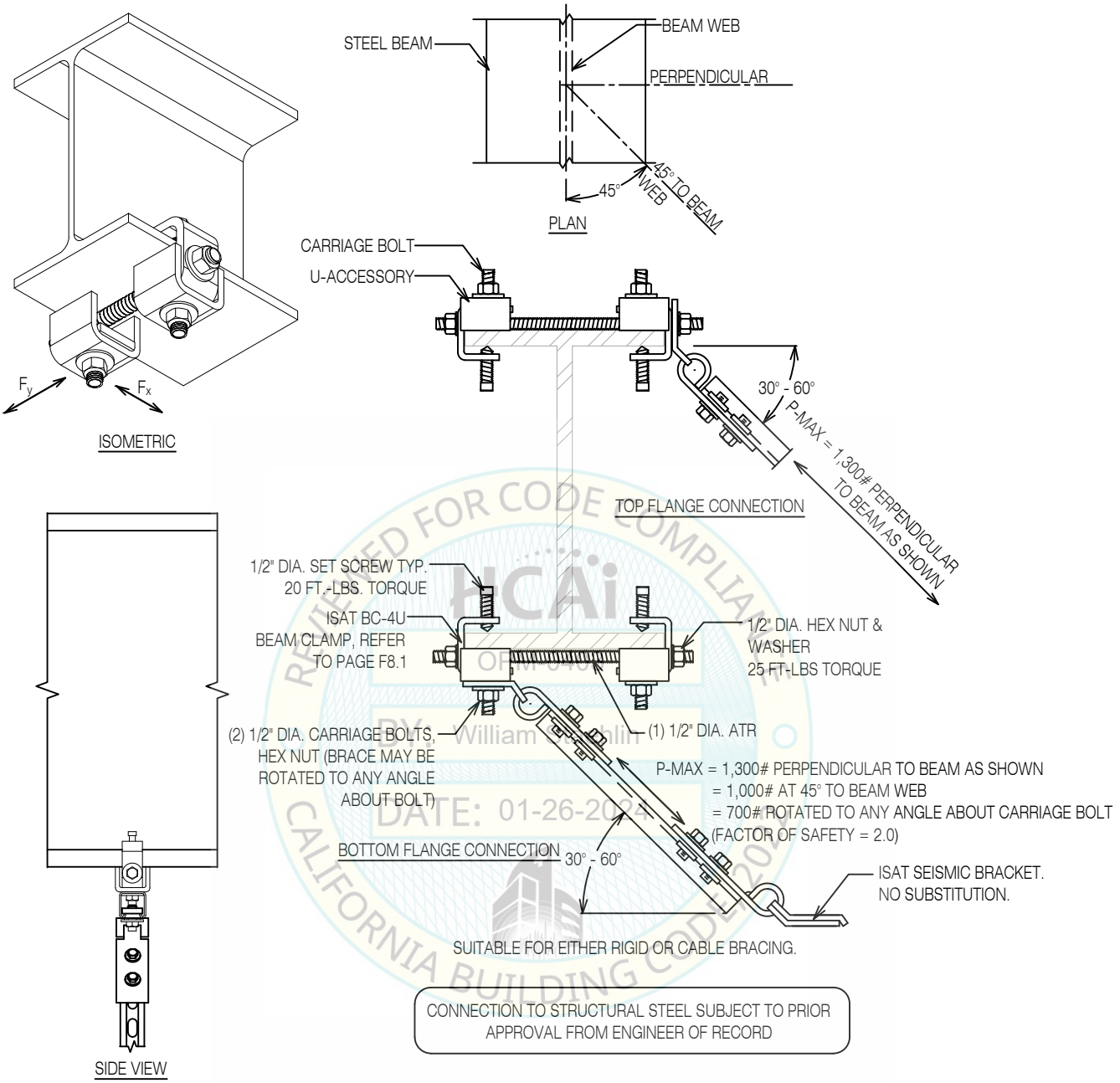

REVIEWED FOR CODE COMPLIANCE
HCAi
OPM-0403
BY: William Staehlin
DATE: 01-26-2024
CALIFORNIA BUILDING CODE

ISAT Part Number	Max. Beam Flange Thickness (in)
BC-4U ASSEMBLY	1 1/8

BC-4U BEAM CLAMP ASSEMBLY SEISMIC BRACE CONNECTION

REGISTERED PROFESSIONAL ENGINEER MARCIN WASAZNIK S 6612 STRUCTURAL STATE OF CALIFORNIA

ISAT
A Division of Tomarco Contractor Specialties
International Seismic Application Technology
14848 Northam Street, La Mirada, CA 90638
877-999-4728 (Toll Free) 714-523-0845 (fax)
www.isatsb.com

Rev. 1
09/23/19

Page
D4.3.1

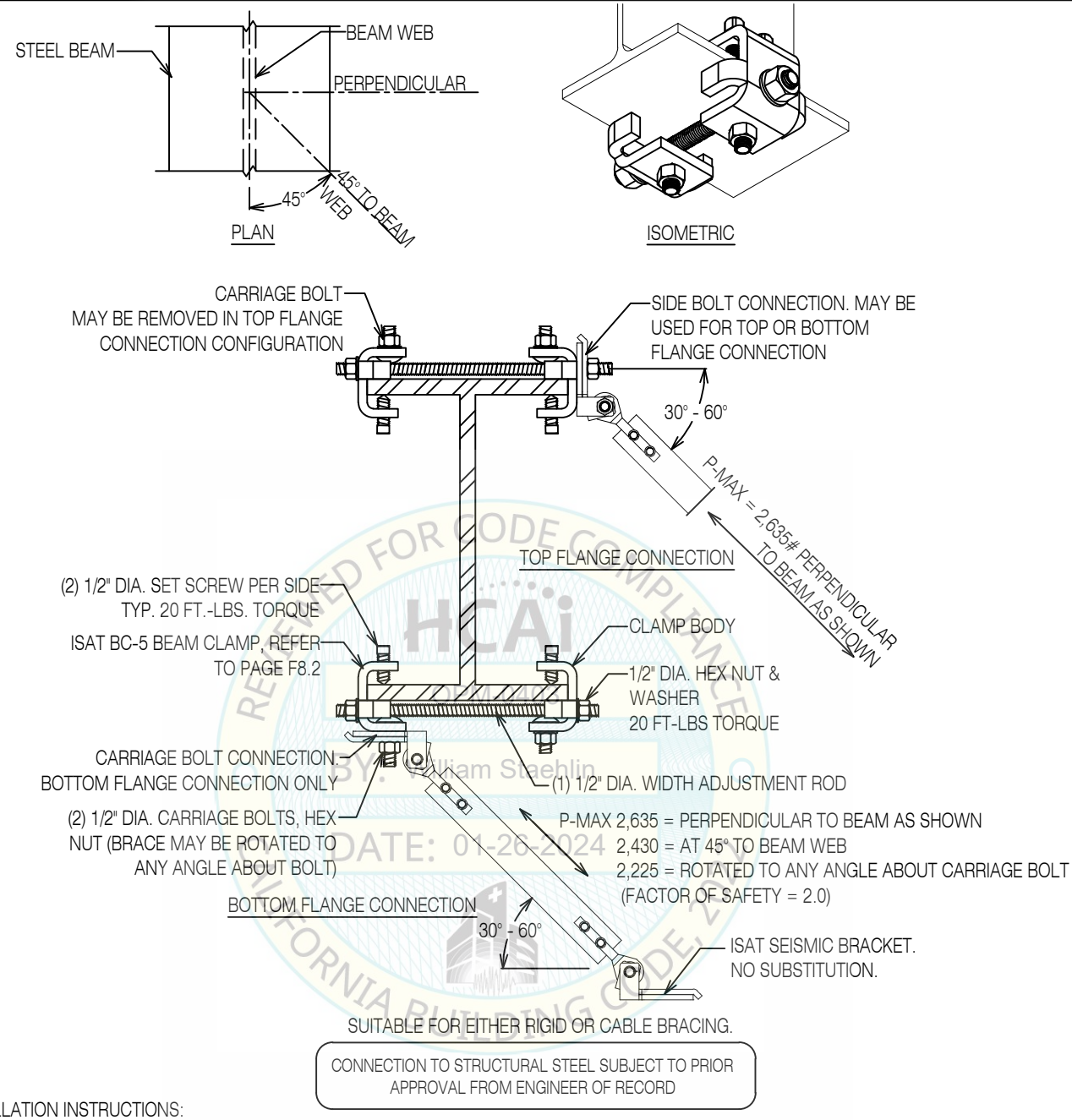

REVIEWED FOR CODE COMPLIANCE
HCAi
BY: William Staehlin
DATE: 01-26-2024
CALIFORNIA BUILDING CODE

INSTALLATION INSTRUCTIONS:

1. FOR "SIDE BOLT" CONNECTIONS, ATTACH SEISMIC BRACKET TO THE "WIDTH ADJUSTMENT ROD" AS SHOWN ABOVE. FOR BOTTOM FLANGE CONNECTIONS BEGIN ON STEP 2.
2. LOOSELY FIT THE BC-5 ASSEMBLY OVER THE STEEL BEAM AS SHOWN IN THE IMAGE ABOVE.
3. HAND TIGHTEN THE NUTS ON THE "WIDTH ADJUSTMENT ROD" AND SET SCREWS ON THE "CLAMP BODY" SO THAT THE "CLAMP BODY" ON EACH SIDE IS SITTING FLAT AGAINST THE SIDE OF THE BEAM FLANGE.
4. STARTING WITH EITHER OF THE "CLAMP BODIES", TORQUE THE FIRST SET SCREW TO 20 FT-LBS, THEN TORQUE THE SECOND SET SCREW TO 20 FT-LBS. NOTE, TORQUE EACH SET SCREW ONLY ONCE.
5. REPEAT STEP 4 ON THE OTHER "CLAMP BODY".
6. TORQUE THE NUTS ON THE "WIDTH ADJUSTMENT ROD" TO 20 FT-LBS.
7. WHEN BRACE ANGLE IS 0-30° MULTIPLY P-MAX VALUES BY 0.86.

BC-5 BEAM CLAMP ASSEMBLY SEISMIC BRACE CONNECTION

REGISTERED PROFESSIONAL ENGINEER
MARCIN WASAZNIK
S 6612
STRUCTURAL
STATE OF CALIFORNIA

ISAT
A Division of Tomarco Contractor Specialties
International Seismic Application Technology
14848 Northam Street, La Mirada, CA 90638
877-999-4728 (Toll Free) 714-523-0845 (fax)
www.isatsb.com

DATE:
10/04/23
PAGE:
D4.3.2

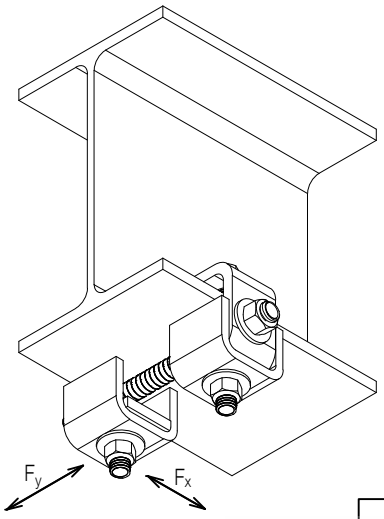

ISOMETRIC

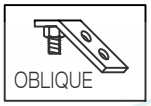

OBLIQUE

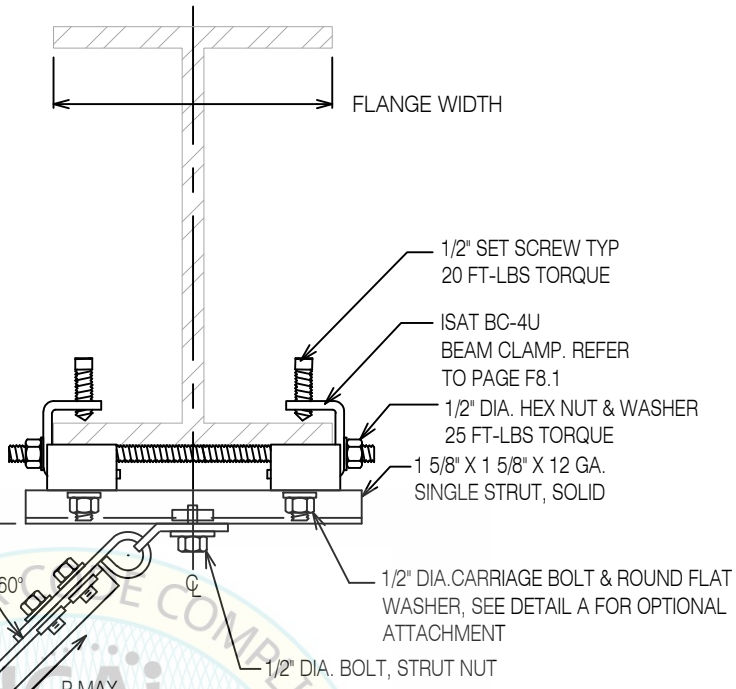

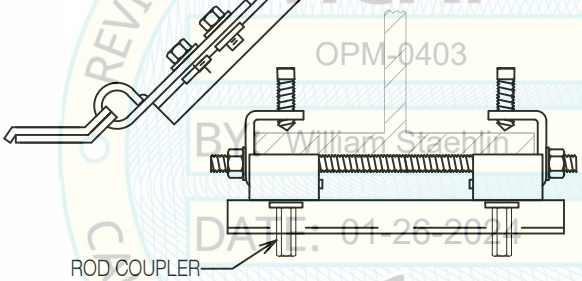

DETAIL A - OPTIONAL ATTACHMENT
ROD COUPLER

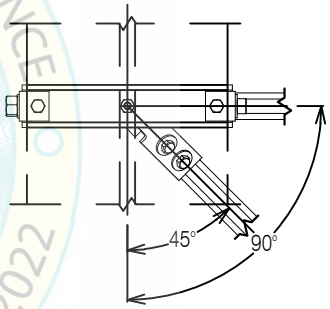

PLAN

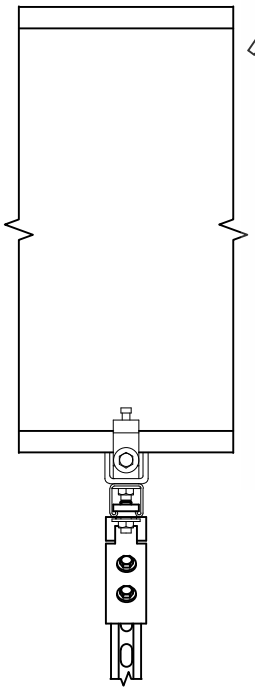

SIDE VIEW

MAXIMUM ALLOWABLE BRACE LOAD "P MAX" AT 30° - 60° BRACE ANGLE			
Maximum Beam Flange Width (in)	P MAX.		
	Parallel To Beam C. L. (lbs)	90 Deg. Angle To Beam (lbs)	45 Deg. Angle Oblique To Beam (lbs)
8	1,380	1,300	995
10	1,380	1,300	995
12	1,250	1,300	995
14	1,060	1,300	995

NOTE: FACTOR OF SAFETY = 2.0

CONNECTION TO STRUCTURAL STEEL SUBJECT TO PRIOR APPROVAL FROM ENGINEER OF RECORD

REVIEWED FOR CODE COMPLIANCE
HCAi
OPM-0403
BY: William Staehlin
DATE: 01-26-2024
CALIFORNIA BUILDING CODE, 2022

BC-4U BEAM CLAMP ASSEMBLY SEISMIC BRACE CONNECTION

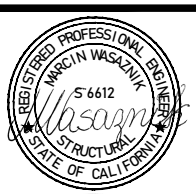

ISAT
A Division of Tomarco Contractor Specialties
International Seismic Application Technology
14848 Northam Street, La Mirada, CA 90638
877-999-4728 (Toll Free) 714-523-0845 (fax)
www.isatsb.com

Rev. 1
10/03/19

Page
D4.4.1

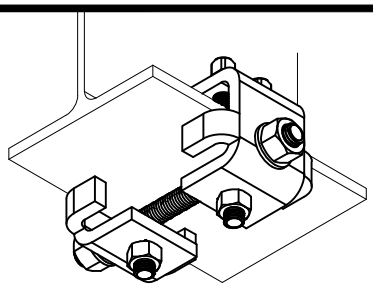

BC-5 ASSEMBLY
ISOMETRIC VIEW

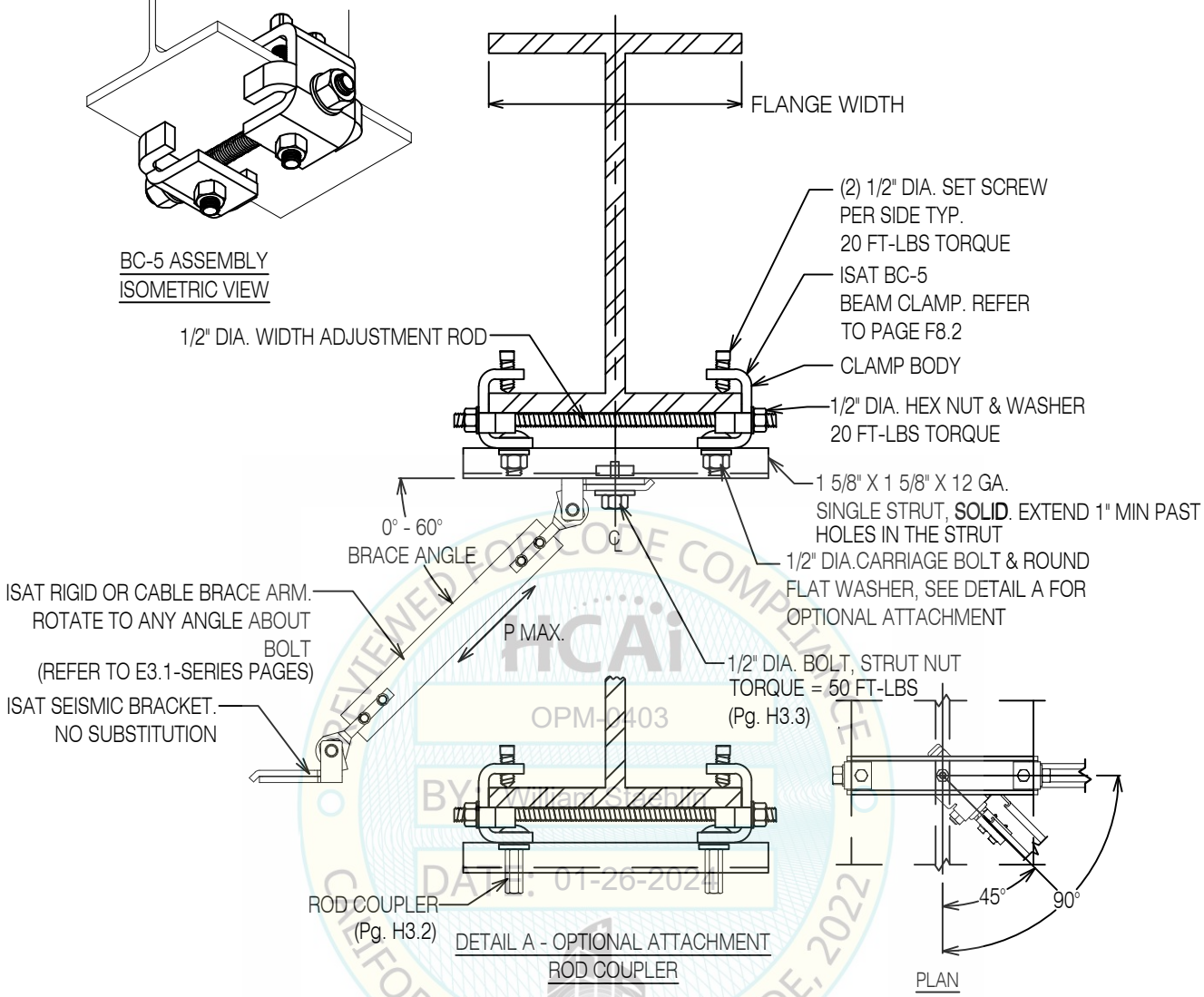

DETAIL A - OPTIONAL ATTACHMENT
ROD COUPLER

PLAN

MAXIMUM ALLOWABLE BRACE LOAD "P MAX" AT 0° - 60° BRACE ANGLE			
MAXIMUM BEAM FLANGE WIDTH (in.)	P MAX.		
	PARALLEL TO BEAM C.L. (lbs)	90 DEG. ANGLE TO BEAM (lbs)	45 DEG. ANGLE OBLIQUE TO BEAM (lbs)
8	1,415	1,850	1,275
10	1,415	1,850	1,275
12	1,400	1,850	1,275
14	1,200	1,700	1,275

NOTE: FACTOR OF SAFETY = 2.0

CONNECTION TO STRUCTURAL STEEL SUBJECT TO PRIOR APPROVAL FROM ENGINEER OF RECORD

INSTALLATION INSTRUCTIONS:

1. LOOSELY FIT THE BC-5 ASSEMBLY OVER THE STEEL BEAM AS SHOWN IN THE IMAGE ABOVE.
2. HAND TIGHTEN THE NUTS ON THE "WIDTH ADJUSTMENT ROD" AND SET SCREWS ON THE "CLAMP BODY" SO THAT THE "CLAMP BODY" ON EACH SIDE IS SITTING FLAT AGAINST THE SIDE OF THE BEAM FLANGE.
3. STARTING WITH EITHER OF THE "CLAMP BODIES", TORQUE THE FIRST SET SCREW TO 20 FT-LBS, THEN TORQUE THE SECOND SET SCREW TO 20 FT-LBS. NOTE, TORQUE EACH SET SCREW ONLY ONCE.
4. REPEAT STEP 3 ON THE OTHER "CLAMP BODY".
5. TORQUE THE NUTS ON THE "WIDTH ADJUSTMENT ROD" TO 20 FT-LBS.
6. ATTACH THE STRUT MEMBER TO THE CARRIAGE BOLTS.

BC-5 BEAM CLAMP WITH BRACKET CENTERED IN 1 5/8" x 1 5/8" STRUT SEISMIC BRACE CONNECTION

REGISTERED PROFESSIONAL ENGINEER
MARCIN WASAZNIK
S-6612
STRUCTURAL
STATE OF CALIFORNIA

ISAT
A Division of Tomarco Contractor Specialties

International Seismic Application Technology
14848 Northam Street, La Mirada, CA 90638
877-999-4728 (Toll Free) 714-523-0845 (fax)
www.isatsb.com

DATE:
10/04/23
PAGE:
D4.4.2

REVIEWED FOR CODE COMPLIANCE BY HCAi
OPM-0403
BY: William Staehlin
DATE: 01-26-2024
CALIFORNIA BUILDING CODE, 2022

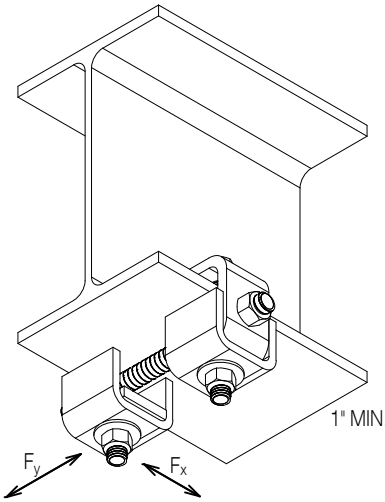

ISOMETRIC

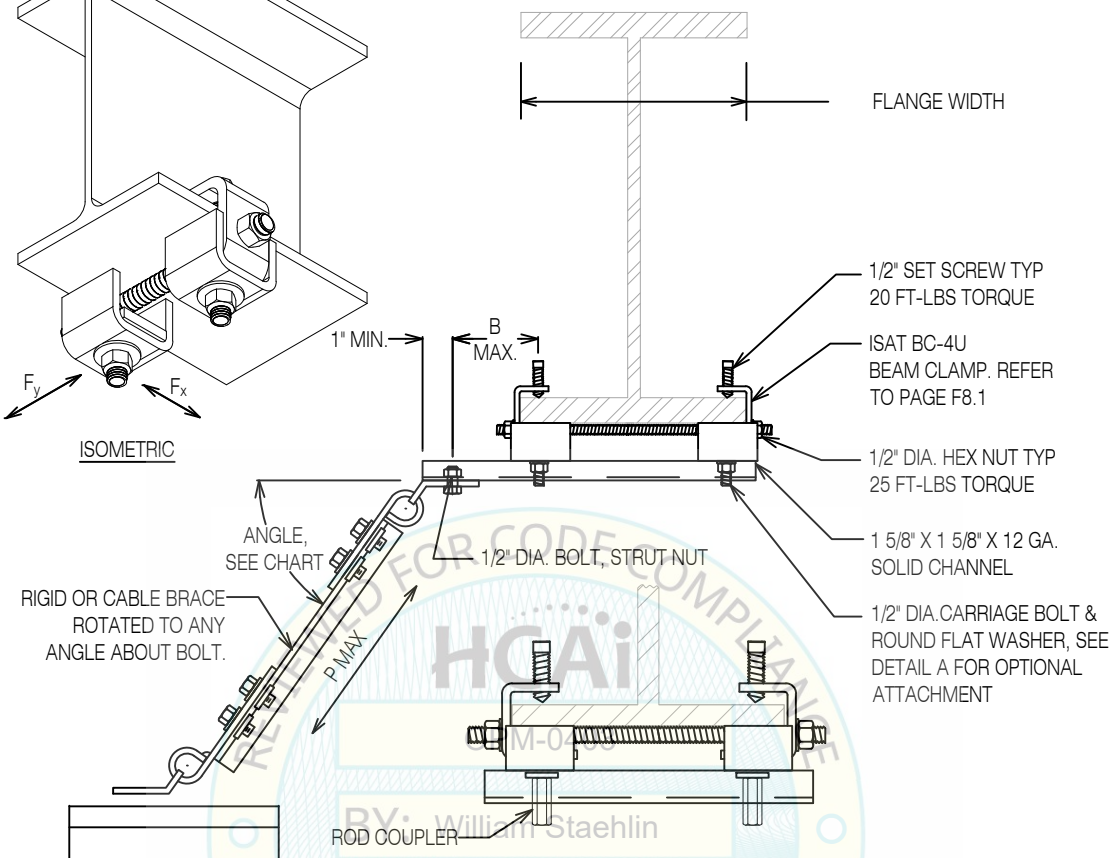

DETAIL A - OPTIONAL ATTACHMENT
ROD COUPLER

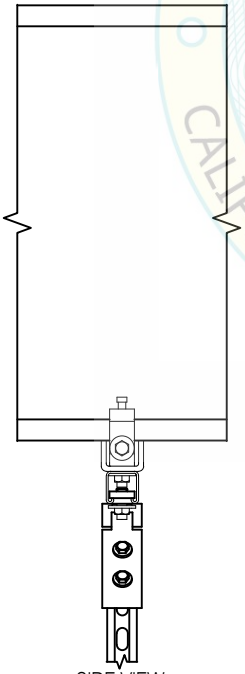

SIDE VIEW

MAXIMUM ALLOWABLE BRACE LOAD "P MAX" AT CANTILEVER WITH BRACE ANGLE FROM HORIZONTAL			
B (in)	FLANGE WIDTH (in)	P MAX (lbs)	
		30° - 45°	46° - 60°
6	≥ 8	500	400
6	< 8[1]	290	295
10	≥ 8	300	300
10	< 8[1]	200	200

NOTE:
1. 5" MIN. FLANGE WIDTH.
2. FACTOR OF SAFETY = 2.0

CONNECTION TO STRUCTURAL STEEL SUBJECT TO PRIOR APPROVAL FROM ENGINEER OF RECORD

REVIEWED FOR CODE COMPLIANCE
HCAi
OPM-0403
BY: William Staehlin
DATE: 01-26-2024
CALIFORNIA BUILDING CODE V2

BC-4U BEAM CLAMP WITH CANTILEVERED 1 5/8" X 1 5/8" STRUT SEISMIC BRACE CONNECTION

REGISTERED PROFESSIONAL ENGINEER
MARCIN WASAZNIK
S 6612
STRUCTURAL
STATE OF CALIFORNIA

ISAT
A Division of Tomarco Contractor Specialties

International Seismic Application Technology
14848 Northam Street, La Mirada, CA 90638
877-999-4728 (Toll Free) 714-523-0845 (fax)
www.isatsb.com

Rev. 1
10/29/19

Page
D4.5.1

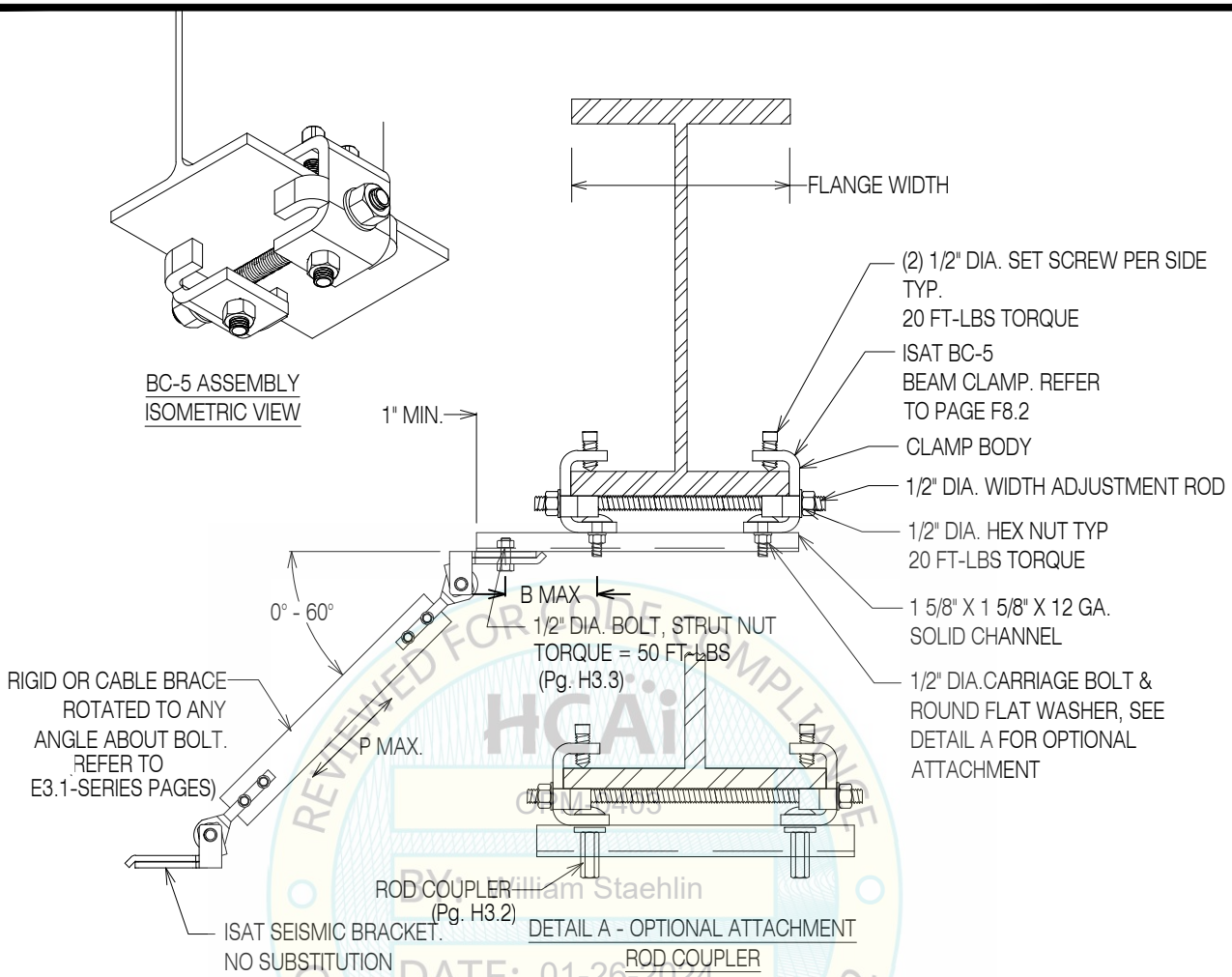

HCAi
OPM-0403
REVIEWED FOR CODE COMPLIANCE
BY: William Staehlin
DATE: 01-26-2024
CALIFORNIA BUILDING CODE 2022

MAXIMUM ALLOWABLE BRACE LOAD "P MAX" AT CANTILEVER WITH BRACE ANGLE FROM HORIZONTAL			
B (in.)	FLANGE WIDTH (in.)	P MAX. (lbs.)	
		30° - 60°	0° - 30°
6	≥ 8	500	600
6	< 8[1]	500	600
10	≥ 8	300	350
10	< 8[1]	300	350

NOTE:
1. 5" MIN. FLANGE WIDTH.
2. FACTOR OF SAFETY = 2.0

CONNECTION TO STRUCTURAL STEEL SUBJECT TO PRIOR APPROVAL FROM ENGINEER OF RECORD

INSTALLATION INSTRUCTIONS:
1. LOOSELY FIT THE BC-5 ASSEMBLY OVER THE STEEL BEAM AS SHOWN IN THE IMAGE ABOVE.
2. HAND TIGHTEN THE NUTS ON THE "WIDTH ADJUSTMENT ROD" AND SET SCREWS ON THE "CLAMP BODY" SO THAT THE "CLAMP BODY" ON EACH SIDE IS SITTING FLAT AGAINST THE SIDE OF THE BEAM FLANGE.
3. STARTING WITH EITHER OF THE "CLAMP BODIES", TORQUE THE FIRST SET SCREW TO 20 FT-LBS, THEN TORQUE THE SECOND SET SCREW TO 20 FT-LBS. NOTE, TORQUE EACH SET SCREW ONLY ONCE.
4. REPEAT STEP 3 ON THE OTHER "CLAMP BODY".
5. TORQUE THE NUTS ON THE "WIDTH ADJUSTMENT ROD" TO 20 FT-LBS.
6. ATTACH THE STRUT MEMBER TO THE CARRIAGE BOLTS.

BC-5 BEAM CLAMP WITH CANTILEVERED 1 5/8" X 1 5/8" STRUT SEISMIC BRACE CONNECTION

REGISTERED PROFESSIONAL ENGINEER
MARCIN WASAZNIK
S-6612
STRUCTURAL
STATE OF CALIFORNIA

ISAT
A Division of Tomarco Contractor Specialties

International Seismic Application Technology
14848 Northam Street, La Mirada, CA 90638
877-999-4728 (Toll Free) 714-523-0845 (fax)
www.isatsb.com

DATE: 10/05/23

PAGE: D4.5.2

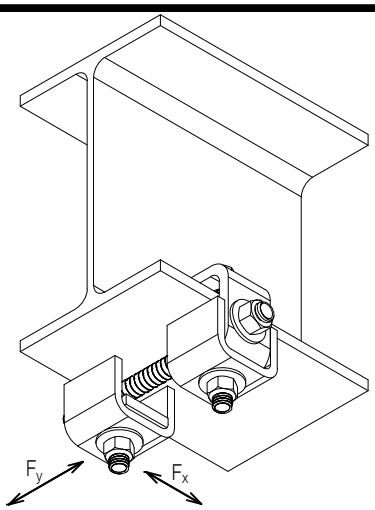

ISOMETRIC

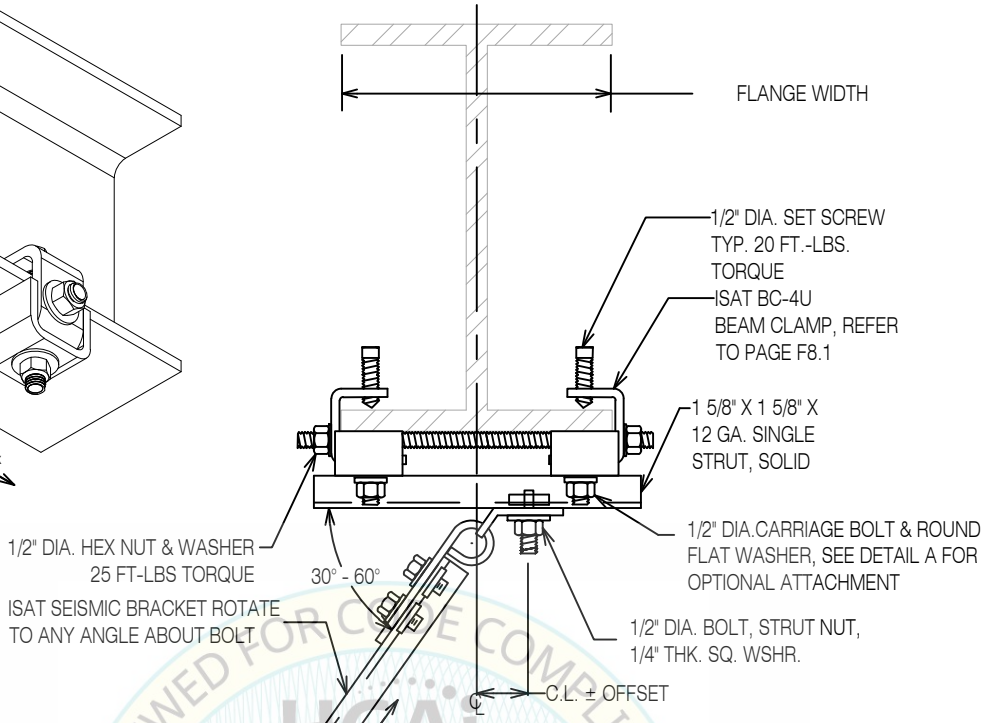

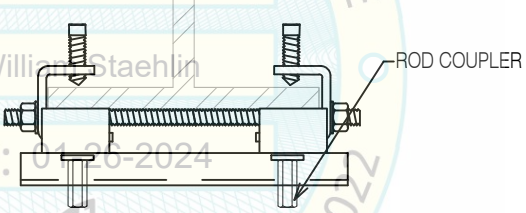

DETAIL A - OPTIONAL ATTACHMENT
ROD COUPLER

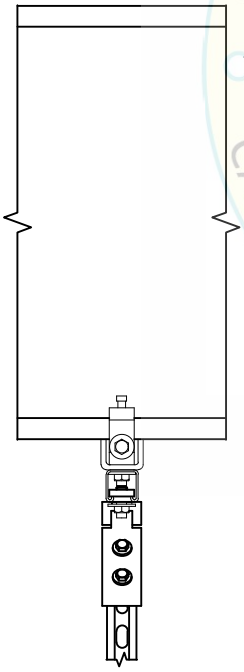

SIDE VIEW

MAXIMUM ALLOWABLE BRACE LOAD "P MAX" AT 30° - 60° DEGREE BRACE ANGLE					
Beam Flange Width (in)	CL +/- 0" (lbs)	CL +/- 1" (lbs)	CL +/- 2" (lbs)	CL +/- 3" (lbs)	CL +/- 4" (lbs)
14	1,000	850	750	675	600
12	1,000	850	700	625	550
10	1,000	800	675	595	-
8	1,000	750	600	-	-

NOTE: FACTOR OF SAFETY = 2.0

CONNECTION TO STRUCTURAL STEEL SUBJECT TO PRIOR APPROVAL FROM ENGINEER OF RECORD

BC-4U BEAM CLAMP ASSEMBLY SEISMIC BRACE CONNECTION

REGISTERED PROFESSIONAL ENGINEER MARCIN WASAZNIK S 6612 STRUCTURAL STATE OF CALIFORNIA

ISAT
A Division of Tomarco Contractor Specialties

International Seismic Application Technology
14848 Northam Street, La Mirada, CA 90638
877-999-4728 (Toll Free) 714-523-0845 (fax)
www.isatsb.com

Rev. 1
10/03/19

Page
D4.6.1

REVIEWED FOR CODE COMPLIANCE
HCAI
OPM-0403
BY: William Staehlin
DATE: 01-26-2024
CALIFORNIA BUILDING CODE 2022

BC-5 ASSEMBLY
ISOMETRIC VIEW

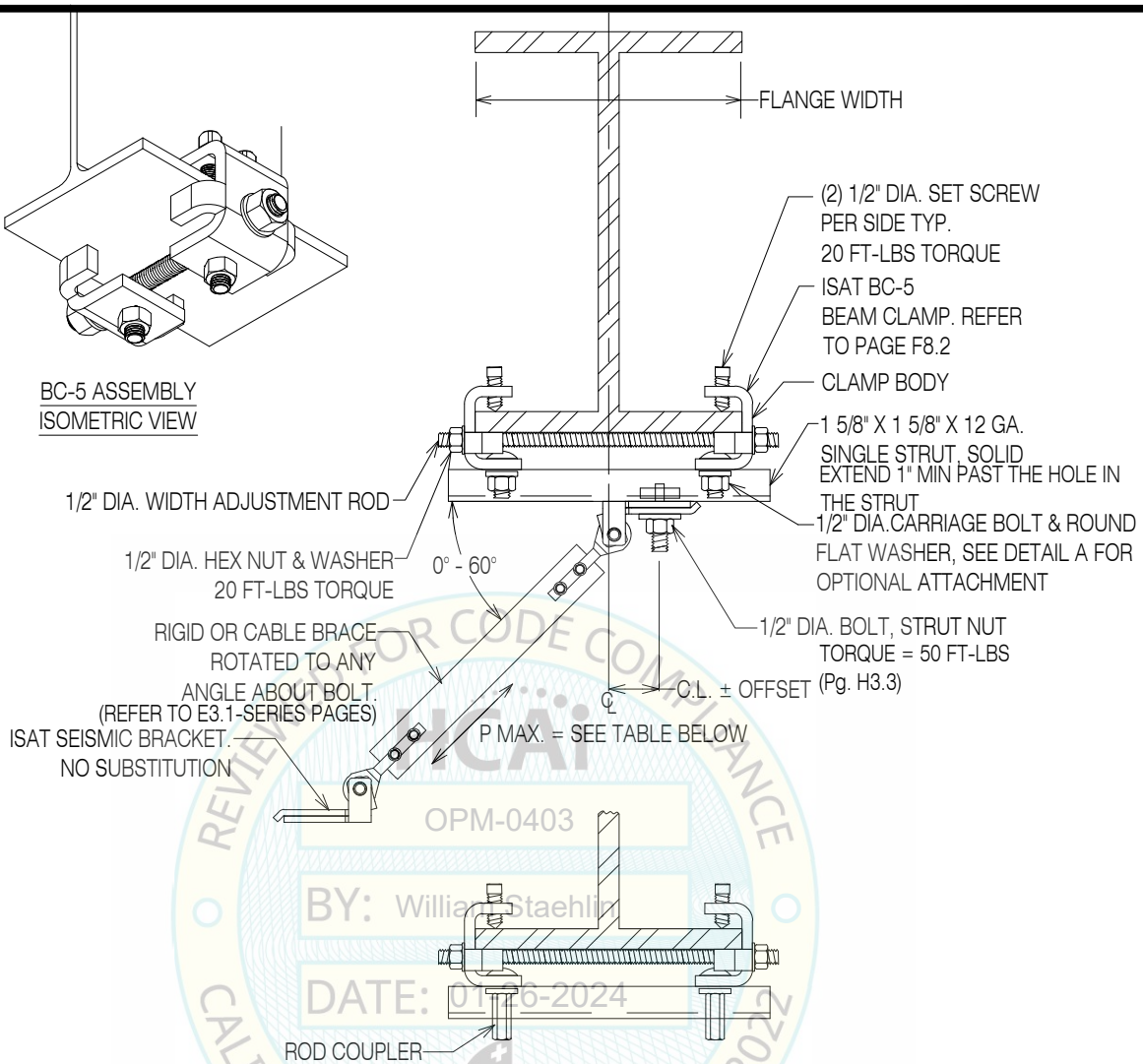

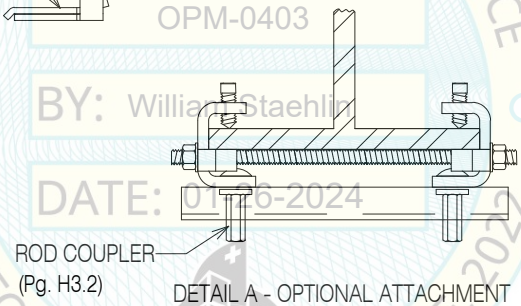

DETAIL A - OPTIONAL ATTACHMENT
ROD COUPLER

REVIEWED FOR CODE COMPLIANCE
HCAi
OPM-0403
BY: William Staehlin
DATE: 01-26-2024
CALIFORNIA BUILDING CODE 2022

MAXIMUM ALLOWABLE BRACE LOAD "P MAX" AT 0° - 60° BRACE ANGLE					
BEAM FLANGE WIDTH (in.)	CL +/- 0" (lbs.)	CL +/- 1" (lbs.)	CL +/- 2" (lbs.)	CL +/- 3" (lbs.)	CL +/- 4" (lbs.)
14	1,000	1,000	1,100	1,275	1,275
12	1,200	1,200	1,275	1,275	1,275
10	1,275	1,275	1,275	1,275	-
8	1,275	1,275	1,275	-	-

NOTE: FACTOR OF SAFETY = 2.0

CONNECTION TO STRUCTURAL STEEL SUBJECT TO PRIOR APPROVAL FROM ENGINEER OF RECORD

INSTALLATION INSTRUCTIONS:

1. LOOSELY FIT THE BC-5 ASSEMBLY OVER THE STEEL BEAM AS SHOWN IN THE IMAGE ABOVE.
2. HAND TIGHTEN THE NUTS ON THE "WIDTH ADJUSTMENT ROD" AND SET SCREWS ON THE "CLAMP BODY" SO THAT THE "CLAMP BODY" ON EACH SIDE IS SITTING FLAT AGAINST THE SIDE OF THE BEAM FLANGE.
3. STARTING WITH EITHER OF THE "CLAMP BODIES", TORQUE THE FIRST SET SCREW TO 20 FT-LBS, THEN TORQUE THE SECOND SET SCREW TO 20 FT-LBS. NOTE, TORQUE EACH SET SCREW ONLY ONCE.
4. REPEAT STEP 3 ON THE OTHER "CLAMP BODY".
5. TORQUE THE NUTS ON THE "WIDTH ADJUSTMENT ROD" TO 20 FT-LBS.
6. ATTACH THE STRUT MEMBER TO THE CARRIAGE BOLTS.

BC-5 BEAM CLAMP WITH BRACKET ON 1 5/8" X 1 5/8" STRUT SEISMIC BRACE CONNECTION

REGISTERED PROFESSIONAL ENGINEER MARCIN WASAZNIK S-6612 STRUCTURAL STATE OF CALIFORNIA

ISAT
A Division of Tomarco Contractor Specialties
International Seismic Application Technology
14848 Northam Street, La Mirada, CA 90638
877-999-4728 (Toll Free) 714-523-0845 (fax)
www.isatsb.com

DATE: 10/05/23
PAGE: D4.6.2

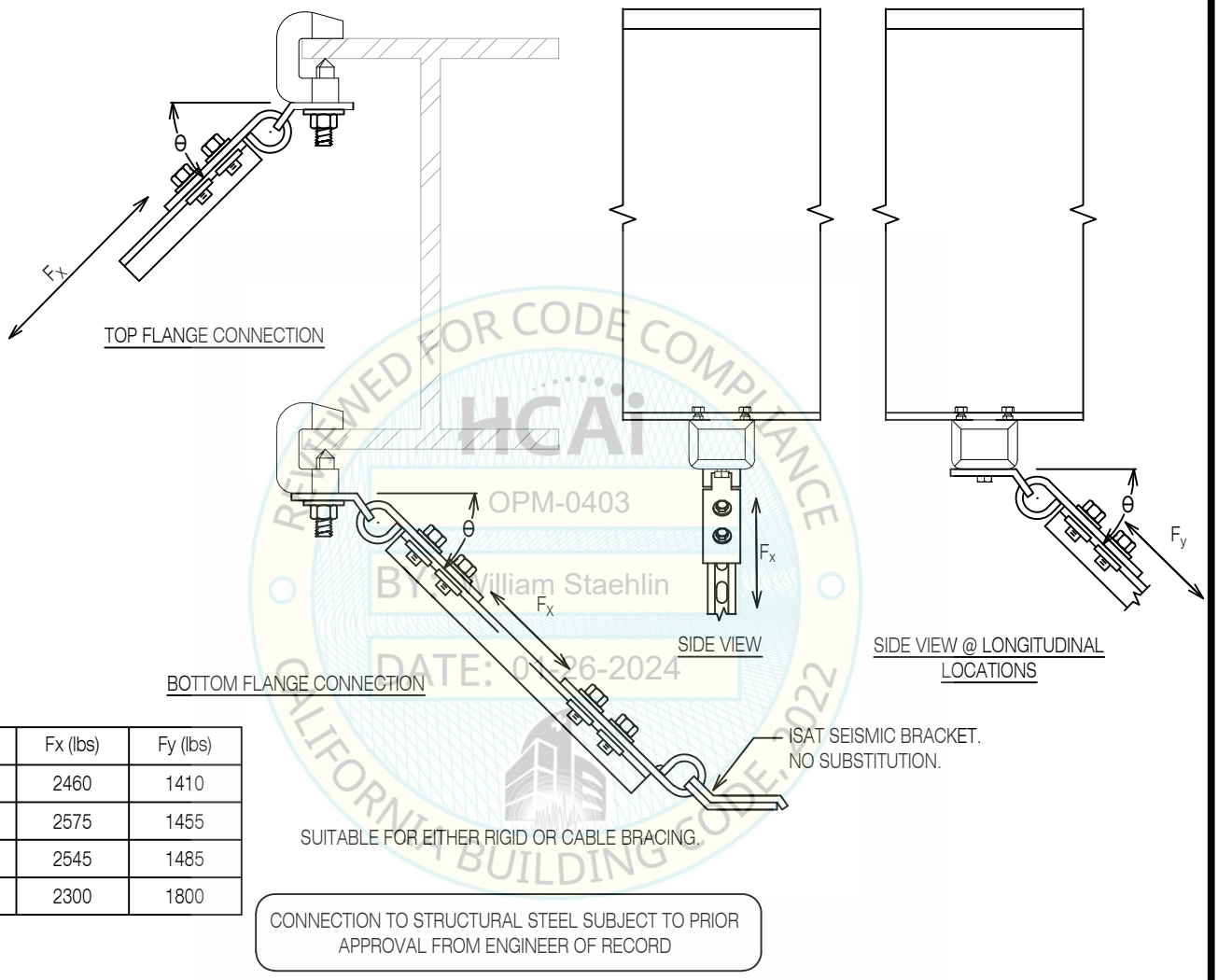

θ	Fx (lbs)	Fy (lbs)
0	2460	1410
30	2575	1455
45	2545	1485
60	2300	1800

CONNECTION TO STRUCTURAL STEEL SUBJECT TO PRIOR APPROVAL FROM ENGINEER OF RECORD

REVIEWED FOR CODE COMPLIANCE
HCAi
OPM-0403
BY: William Staehlin
DATE: 01-26-2024
CALIFORNIA BUILDING CODE 2022

PHD Fig. 045 BEAM CLAMP ASSEMBLY SEISMIC BRACE CONNECTION

REGISTERED PROFESSIONAL ENGINEER
MARCIN WASAZNIK
S 6612
STRUCTURAL
STATE OF CALIFORNIA

ISAT
A Division of Tomarco Contractor Specialties
International Seismic Application Technology
14848 Northam Street, La Mirada, CA 90638
877-999-4728 (Toll Free) 714-523-0845 (fax)
www.isatsb.com

Rev. 1
11/14/18

Page
D4.7

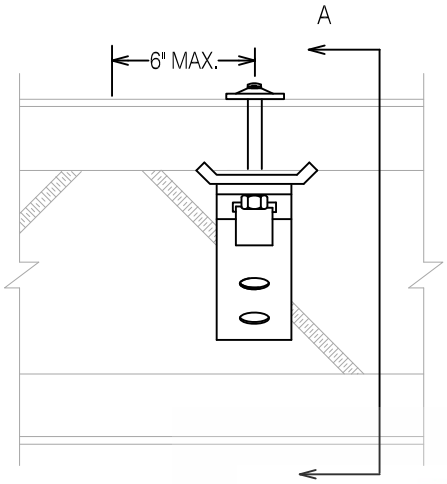

SIDE VIEW

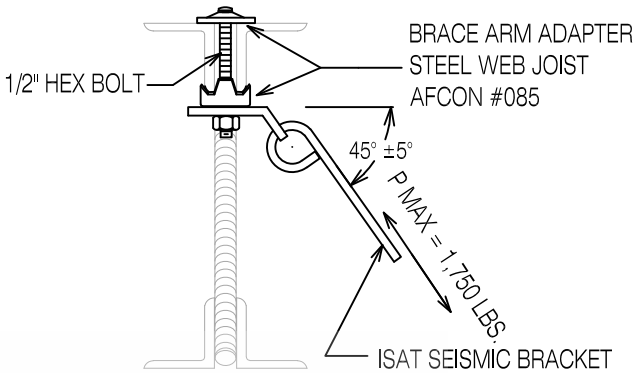

SECTION A-A

REVIEWED FOR CODE COMPLIANCE
HCAi
OPM-0403
BY: William Staehlin
DATE:
CALIFORNIA BUILDING CODE, 2022

CONNECTION TO STRUCTURAL STEEL SUBJECT TO PRIOR APPROVAL FROM ENGINEER OF RECORD.

JOIST BRIDGING, CHORD BENDING AND TRANSFER OF LOADS INTO THE STRUCTURAL DIAPHRAGM ARE TO BE DESIGNED BY THE ENGINEER OF RECORD.

PERPENDICULAR SEISMIC BRACE CONNECTION TO TOP CHORD OF OPEN WEB STEEL JOIST

ISAT
A Division of Tomarco Contractor Specialties

International Seismic Application Technology
14848 Northam Street, La Mirada, CA 90638
877-999-4728 (Toll Free) 714-523-0845 (fax)
www.isatsb.com

Rev. 7
02/22/18

Page
D5.1

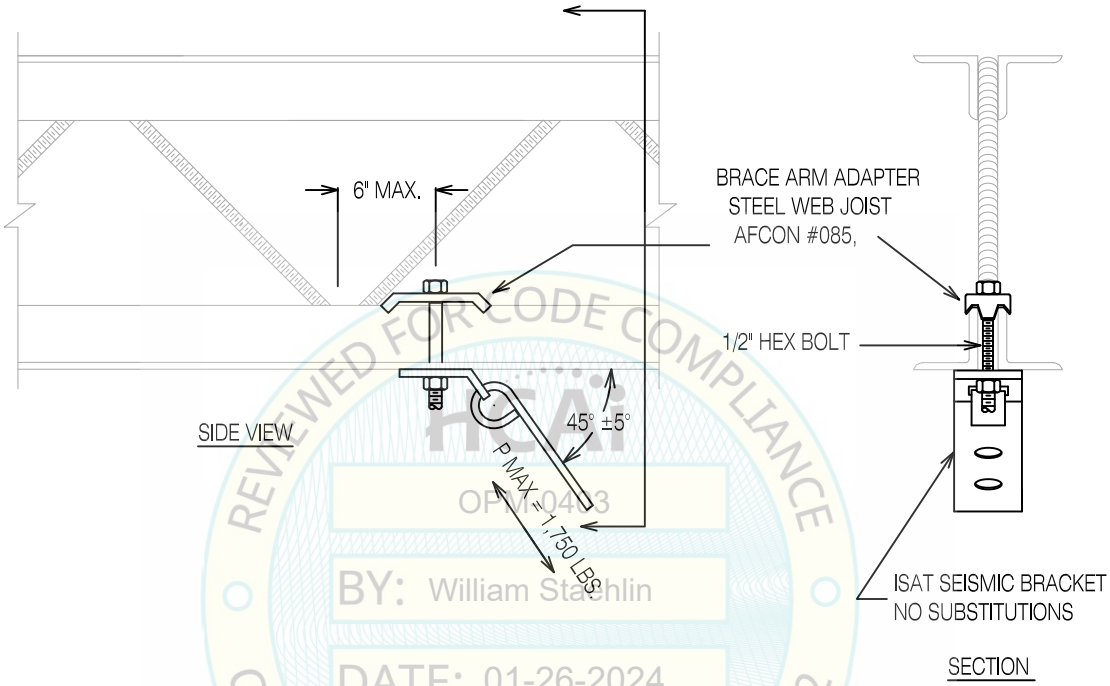

REVIEWED FOR CODE COMPLIANCE
OPM-0403
BY: William Staehlin
DATE: 01-26-2024
CALIFORNIA BUILDING CODE 2022

CONNECTION TO STRUCTURAL STEEL SUBJECT TO PRIOR APPROVAL FROM ENGINEER OF RECORD.

JOIST BRIDGING, CHORD BENDING AND TRANSFER OF LOADS INTO THE STRUCTURAL DIAPHRAGM ARE TO BE DESIGNED BY THE ENGINEER OF RECORD.

IN-LINE SEISMIC BRACE CONNECTION TO BOTTOM OF CHORDS OF OPEN WEB STEEL JOIST

REGISTERED PROFESSIONAL ENGINEER
MARCIN WASAZNIK
S 6612
STRUCTURAL
STATE OF CALIFORNIA

ISAT
A Division of Tomarco Contractor Specialties
International Seismic Application Technology
14848 Northam Street, La Mirada, CA 90638
877-999-4728 (Toll Free) 714-523-0845 (fax)
www.isatsb.com

Rev. 7
02/22/18

Page
D5.2

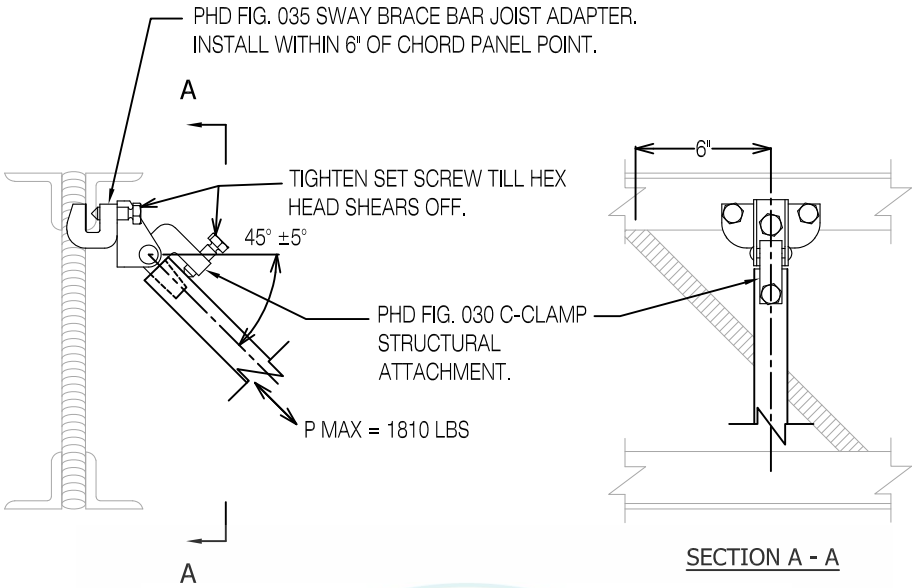

SECTION A - A

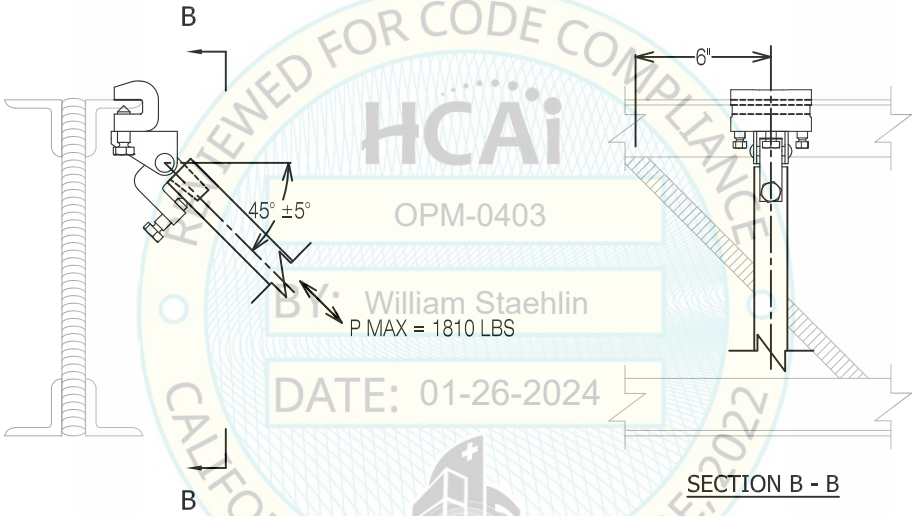

SECTION B - B

ALTERNATE ATTACHMENT TO HORIZONTAL FLANGE

REVIEWED FOR CODE COMPLIANCE
HCAi
OPM-0403
BY: William Staehlin
DATE: 01-26-2024
CALIFORNIA BUILDING CODE 2022

NOTES:

1. FM APPROVED WHEN USED WITH 1 TO 2 INCH SCH. 40, GB/T3091, EN10255H OR JISG3454 BRACE PIPE.
2. FM APPROVED WITH BRACE ELEMENT OF STRUCTURAL STEEL 1/4" TO 3/8" INCH THICK.
3. FM APPROVED WITH BRACE ELEMENT OF PHD 1001 OR 1201 SERIES STRUT.

CONNECTION TO STRUCTURAL STEEL SUBJECT TO PRIOR APPROVAL FROM ENGINEER OF RECORD.

JOIST BRIDGING, CHORD BENDING AND TRANSFER OF LOADS INTO THE STRUCTURAL DIAPHRAGM ARE TO BE DESIGNED BY THE ENGINEER OF RECORD.

PERPENDICULAR SEISMIC BRACE CONNECTION TO TOP CHORD OF OPEN WEB STEEL JOIST

REGISTERED PROFESSIONAL ENGINEER
MARCIN WASAZNIK
S 6612
STRUCTURAL
STATE OF CALIFORNIA

ISAT
A Division of Tomarco Contractor Specialties
International Seismic Application Technology
14848 Northam Street, La Mirada, CA 90638
877-999-4728 (Toll Free) 714-523-0845 (fax)
www.isatsb.com

Rev. 7
02/19/18

Page
D5.3

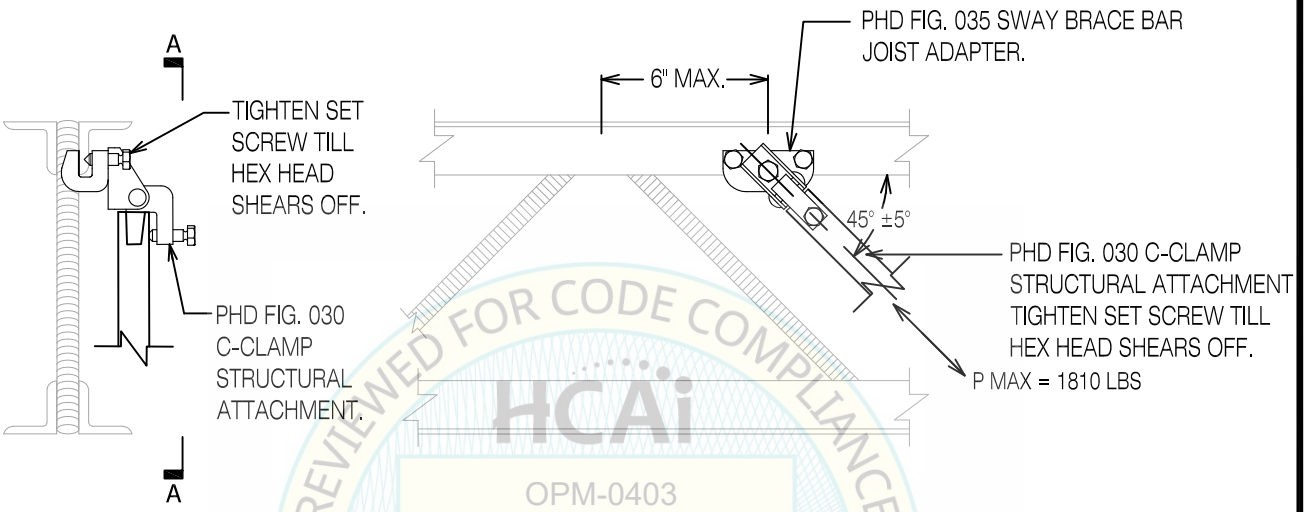

REVIEWED FOR CODE COMPLIANCE
HCAi
OPM-0403
BY: William Staehlin
DATE: 01-26-2024
CALIFORNIA BUILDING CODE

NOTES:

1. FM APPROVED WHEN USED WITH 1 TO 2 INCH SCH. 40, GB/T3091, EN10255H OR JISG3454 BRACE PIPE.
2. FM APPROVED WITH BRACE ELEMENT OF STRUCTURAL STEEL 1/4" TO 3/8" INCH THICK.
3. FM APPROVED WITH BRACE ELEMENT OF PHD 1001 OR 1201 SERIES STRUT.

CONNECTION TO STRUCTURAL STEEL SUBJECT TO PRIOR APPROVAL FROM ENGINEER OF RECORD.

JOIST BRIDGING, CHORD BENDING AND TRANSFER OF LOADS INTO THE STRUCTURAL DIAPHRAGM ARE TO BE DESIGNED BY THE ENGINEER OF RECORD.

IN-LINE SEISMIC BRACE CONNECTION TO SINGLE TOP CHORD OF OPEN WEB STEEL JOIST

REGISTERED PROFESSIONAL ENGINEER
MARCIN WASAZNIK
S 6612
STRUCTURAL
STATE OF CALIFORNIA

ISAT
A Division of Tomarco Contractor Specialties

International Seismic Application Technology
14848 Northam Street, La Mirada, CA 90638
877-999-4728 (Toll Free) 714-523-0845 (fax)
www.isatsb.com

Rev. 7
02/19/18

Page
D5.4

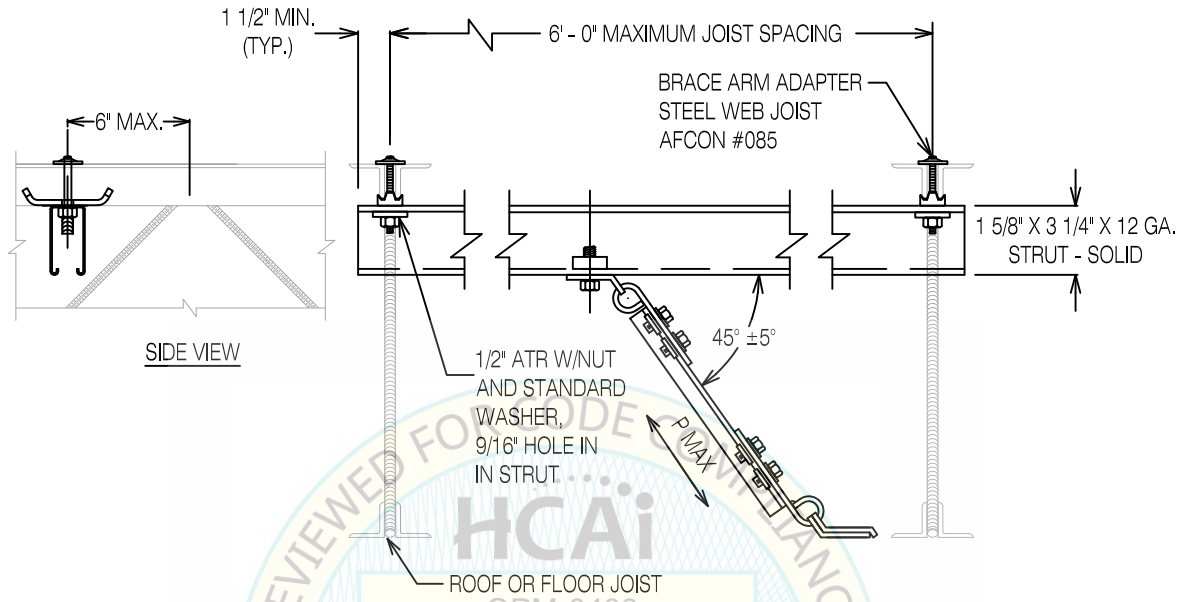

HCAi
OPM-0403
BY: William Staehlin
DATE: 01/26/2024

CONNECTION TO STRUCTURAL STEEL SUBJECT TO PRIOR APPROVAL FROM ENGINEER OF RECORD.

JOIST BRIDGING, CHORD BENDING AND TRANSFER OF LOADS INTO THE STRUCTURAL DIAPHRAGM ARE TO BE DESIGNED BY THE ENGINEER OF RECORD.

SEISMIC BRACE ANCHOR LOAD (P)
P MAX = 300 LBS PARALLEL TO STRUT AS SHOWN
P MAX = 150 LBS ROTATE TO ANY ANGLE AROUNG BOLT

STRUT CONNECTION TO STEEL BAR JOIST SEISMIC BRACE CONNECTION

REGISTERED PROFESSIONAL ENGINEER
MARCIN WASAZNIK
S 6612
STRUCTURAL
STATE OF CALIFORNIA

ISAT
A Division of Tomarco Contractor Specialties

International Seismic Application Technology
14848 Northam Street, La Mirada, CA 90638
877-999-4728 (Toll Free) 714-523-0845 (fax)
www.isatsb.com

Rev. 7
02/22/18

Page
D5.5

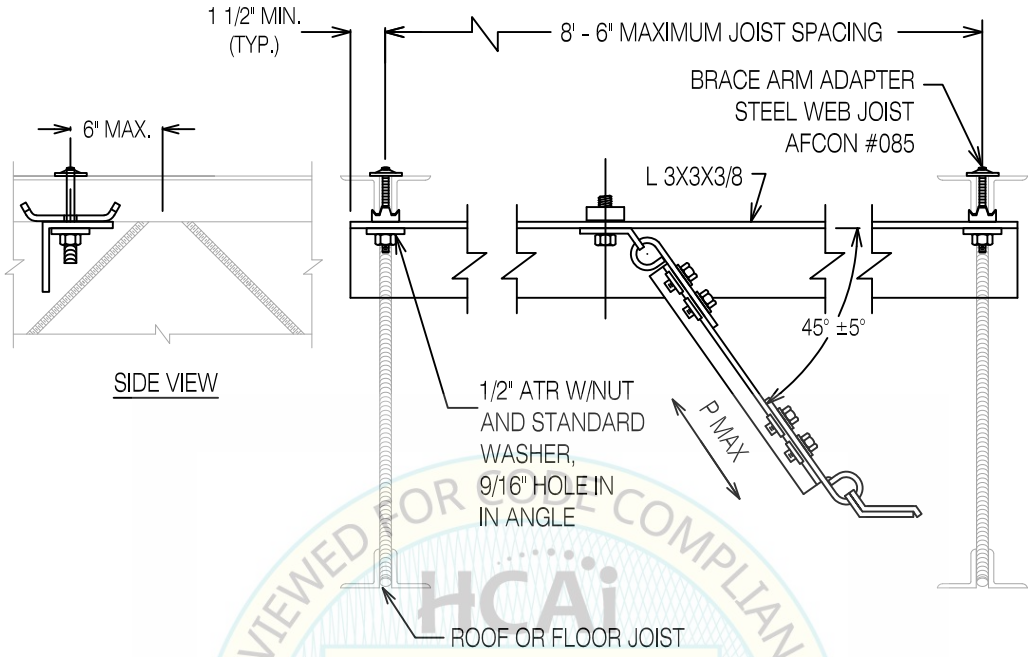

REVIEWED FOR CODE COMPLIANCE
HCAi
OPM-0403
BY
DATE
CALIFORNIA BUILDING CODE 2022

CONNECTION TO STRUCTURAL STEEL SUBJECT TO PRIOR APPROVAL FROM ENGINEER OF RECORD.

JOIST BRIDGING, CHORD BENDING AND TRANSFER OF LOADS INTO THE STRUCTURAL DIAPHRAGM ARE TO BE DESIGNED BY THE ENGINEER OF RECORD.

SEISMIC BRACE ANCHOR LOAD (P)

P MAX = 1,000 LBS PARALLEL TO STRUT AS SHOWN

P MAX = 500 LBS ROTATE TO ANY ANGLE AROUNG BOLT

STRUCTURAL ANGLE AT STEEL BAR JOIST SEISMIC BRACE CONNECTION

REGISTERED PROFESSIONAL ENGINEER
MARCIN WASAZNIK
S 6612
STRUCTURAL
STATE OF CALIFORNIA

ISAT
A Division of Tomarco Contractor Specialties

International Seismic Application Technology
14848 Northam Street, La Mirada, CA 90638
877-999-4728 (Toll Free) 714-523-0845 (fax)
www.isatsb.com

Rev. 7
02/22/18

Page
D5.6

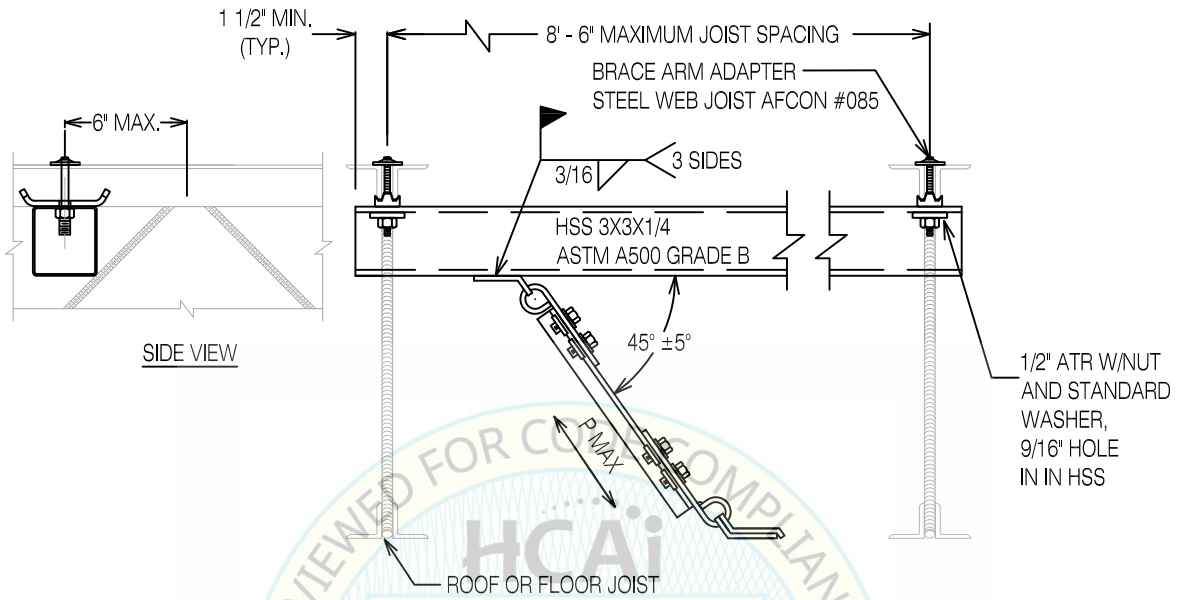

REVIEWED FOR CODE COMPLIANCE
HCAi
OPM-0403
Reviewer: Staehlin
Date: 01/26/2024
CALIFORNIA BUILDING CODE 2022

CONNECTION TO STRUCTURAL STEEL SUBJECT TO PRIOR APPROVAL FROM ENGINEER OF RECORD.

JOIST BRIDGING, CHORD BENDING AND TRANSFER OF LOADS INTO THE STRUCTURAL DIAPHRAGM ARE TO BE DESIGNED BY THE ENGINEER OF RECORD.

SEISMIC BRACE ANCHOR LOAD P MAX = 1500 LBS
BRACE MAY BE ROTATED TO ANY ANGLE

HSS 3X3X1/4 CONNECTION TO STEEL BAR JOIST SEISMIC BRACE CONNECTION

REGISTERED PROFESSIONAL ENGINEER
MARCIN WASAZNIK
S 6612
STRUCTURAL
STATE OF CALIFORNIA

ISAT
A Division of Tomarco Contractor Specialties
International Seismic Application Technology
14848 Northam Street, La Mirada, CA 90638
877-999-4728 (Toll Free) 714-523-0845 (fax)
www.isatsb.com

Rev. 7
02/19/18

Page
D5.7

STRUCTURAL ENGINEER OF RECORD TO CHECK DECK DEFLECTION AND VERIFY CAPACITY OF DECK AND STRUCTURE TO ACCOMMODATE THE LOADS SHOWN

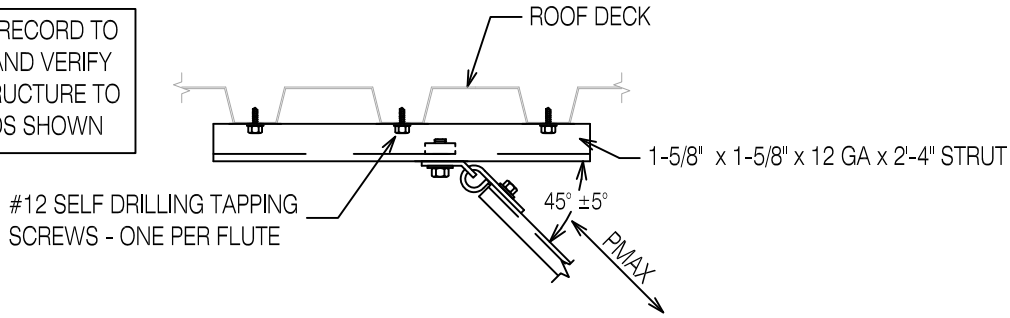

P MAX FOR STRUT SCREWED DIRECTLY TO THE ROOF DECK (LBS.)			
Fy (ksi)	DECK THICKNESS	BRACE IN-LINE WITH STRUT (AS SHOWN)	BRACE PERPENDICULAR TO STRUT (OR AT ANY ANGLE)
33	33 MIL (20 GAGE)	200	95
33	43 MIL (18 GAGE)	250	125
50	54 MIL (16 GAGE)	350	160

DETAIL 1 - SINGLE STRUT SCREWED DIRECTLY TO ROOF DECK

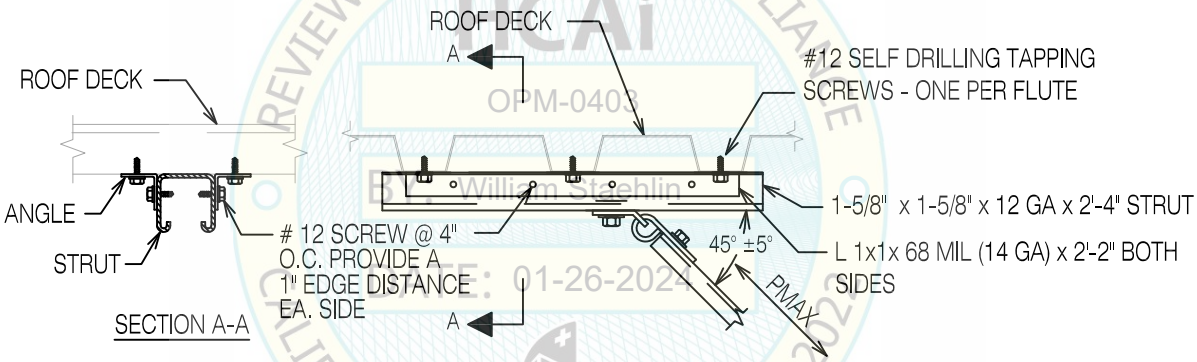

P MAX FOR ANGLES SCREWED DIRECTLY TO THE ROOF DECK (LBS.)			
Fy (ksi)	DECK THICKNESS	BRACE IN-LINE WITH STRUT (AS SHOWN)	BRACE PERPENDICULAR TO STRUT (OR AT ANY ANGLE)
33	33 MIL (20 GAGE)	400	190
33	43 MIL (18 GAGE)	500	250
50	54 MIL (16 GAGE)	700	320

DETAIL 2 - SINGLE STRUT WITH ANGLES ON BOTH SIDES

ROOF DECK CONNECTION DETAILS AT SEISMIC BRACE LOCATIONS

REVIEWED FOR CODE COMPLIANCE
HCAi
OPM-0403
By: William Staehlin
DATE: 01-26-2024
CALIFORNIA BUILDING CODE, 2022

REGISTERED PROFESSIONAL ENGINEER MARCIN WASAZNIK S 6612 STRUCTURAL STATE OF CALIFORNIA

ISAT
A Division of Tomarco Contractor Specialties

International Seismic Application Technology
14848 Northam Street, La Mirada, CA 90638
877-999-4728 (Toll Free) 714-523-0845 (fax)
www.isatsb.com

Rev. 7
02/22/18

Page
D5.8

INSTALLATION REQUIREMENTS
CONNECTIONS TO WOOD FRAMING

GENERAL

1. THE STRUCTURAL ENGINEER OF RECORD (SEOR) SHALL CONFIRM THE SUITABILITY OF THE STRUCTURE TO ACCOMMODATE THE LOADS SHOWN.
2. THE BLOCKING AND CONNECTION TO THE STRUCTURAL DIAPHRAGM REQUIRED TO TRANSFER THE LOADS SHOWN INTO THE STRUCTURAL SYSTEM ARE TO BE DESIGNED BY THE STRUCTURAL ENGINEER OF RECORD.
3. WOOD SPECIFIC GRAVITY SHALL BE 0.50 MINIMUM.

LAG SCREWS

1. LAG SCREWS SHALL CONFORM TO DIMENSIONAL REQUIREMENTS OF ANSI/ASME STANDARD B18.2.1 - 2010. SAE J429 GRADE 1 OR A307 GRADE A.
2. LEAD HOLES FOR LAG SCREWS SHALL BE BORED AS FOLLOWS:
   A. THE CLEARANCE HOLE FOR THE SHANK SHALL HAVE THE SAME DIAMETER AS THE SHANK AND THE SAME DEPTH OF PENETRATION AS THE LENGTH FO UNTHREADED SHANK.
   B. THE LEAD HOLE FOR THE THREADED PORTION SHALL HAVE A DIAMETER EQUAL TO 40 % TO 70% OF THE SHANK DIAMETER AND A LENGTH OF AT LEAST THE LENGTH OF THE THREADED PORTION.
3. THE THREADED PORTION OF THE LAG BOLT SHALL BE INSERTED IN ITS LEAD HOLE BY TURNING WITH A WRENCH, NOT BY DRIVING WITH A HAMMER IN COMPLIANCE WITH PROVISIONS OF THE 2005 N.D.S., SECTION 11.1.3.4.
4. SOAP OR OTHER LUBRICANT SHALL BE USED ON THE LAG SCREW OR IN THE LEAD HOLES TO FACILITATE INSERTION AND PREVENT DAMAGE TO THE LAG SCREW

THROUGH BOLT CONNECTIONS

1. BOLTS SHALL CONFORM TO DIMENSIONAL REQUIREMENTS OF ANSI/ASME STANDARD B18.2.1.
2. HOLES SHALL BE A MINIMUM OF 1/32" TO A MAXIMUM OF 1/16" LARGER THAN THE BOLT DIAMETER.
3. DESIGN VALUES APPLY TO CONNECTIONS WHICH HAVE BEEN TIGHTENED.
4. PLATE WASHERS ARE REQUIRED FOR ALL BOLTED CONNECTIONS.

MINIMUM SIZES FOR SQUARE PLATE
WASHER UNDER ALL BOLT HEADS AND/OR NUTS
NUTS IN CONTACT WITH WOOD MEMBERS

BOLT SIZE	PLATE WASHER SIZE
1/2" DIAMETER	3/16" THK X 2" X 2"
5/8" DIAMETER	1/4" THK X 2 1/2" X 2 1/2"
3/4" DIAMETER	5/16" THK X 2 3/4" X 2 3/4"

REVIEWED FOR CODE COMPLIANCE
HCAi
OPM-0403
BY: William Staehlin
DATE: 01-26-2024
CALIFORNIA BUILDING CODE, 2022

INSTALLATION REQUIREMENTS - WOOD CONNECTIONS

REGISTERED PROFESSIONAL ENGINEER
MARCIN WASAZNIK
S 6612
STRUCTURAL
STATE OF CALIFORNIA

ISAT
A Division of Tomarco Contractor Specialties

International Seismic Application Technology
14848 Northam Street, La Mirada, CA 90638
877-999-4728 (Toll Free) 714-523-0845 (fax)
www.isatsb.com

Rev. 7
02/23/18
Page
D6.1

01/26/2024 OPM-0403: Reviewed for Code Compliance by William Staehlin Page 894 of 1157

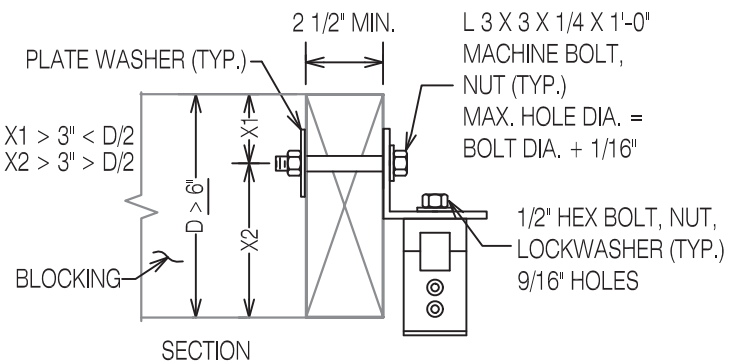

SECTION

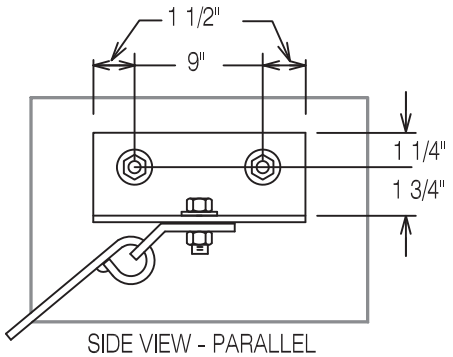

SIDE VIEW - PARALLEL

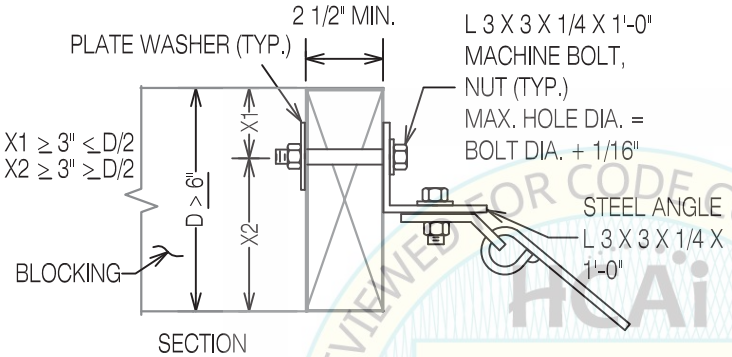

SECTION

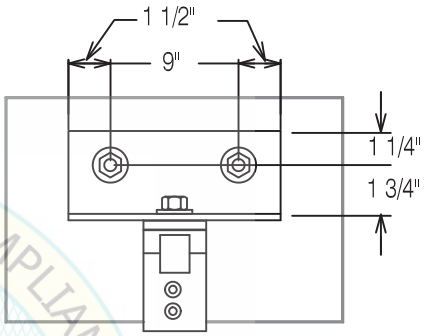

SIDE VIEW - PERPENDICULAR

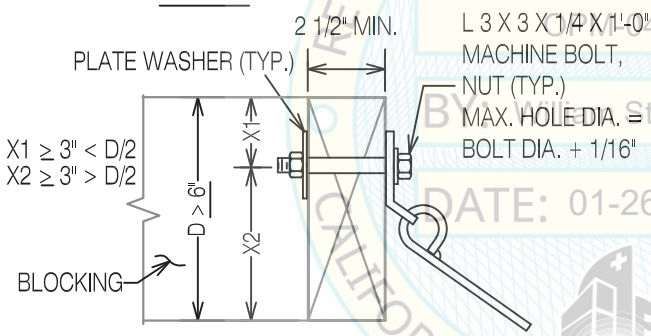

SECTION

SINGLE BOLT

WOOD SPECIES SPECIFIC GRAVITY G = 0.50 MIN.
PLATE WASHER REQ'D UNDER BOLT HEAD OR NUT BEARING ON WOOD. REFER TO INSTALLATION REQUIREMENTS PAGE D6.1.

NOTE: ENGINEER OF RECORD TO CONFIRM SUITABILITY OF STRUCTURE TO ACCOMMODATE THE LOADS SHOWN BELOW.

DESIGN AND DETAILING OF BLOCKING REQUIRED FOR STRUCTURAL STABILITY AND TIES TO HORIZONTAL DIAPHRAGM ARE TO BE BY THE STRUCTURAL ENGINEER OF RECORD (TYP OF ALL CONFIGURATIONS).

MAX. ALLOWABLE BRACE LOAD
AT 45 DEGREE BRACE ANGLE
BASED ON ALLOWABLE BOLT VALUES
SEISMIC LOAD DURATION FACTOR = 1.6

BOLT DIAMETER	PARALLEL		PERPENDICULAR	
	1 BOLT	2 BOLT	1 BOLT	2 BOLT
Inch	Lbs.	Lbs.	Lbs.	Lbs.
1/2"	825	1,125	720	1,560
5/8"	1,025	1,400	920	1,840
3/4"	1,225	1,650	1,075	2,150

REVIEWED FOR CODE COMPLIANCE
HCAi
OPM-0403
BY: William Staehlin
DATE: 01-26-2024
CALIFORNIA BUILDING CODE 2022

THRU BOLT CONNECTIONS TO STRUCTURAL LUMBER

REGISTERED PROFESSIONAL ENGINEER
MARCIN WASAZNIK
S 6612
STRUCTURAL
STATE OF CALIFORNIA

ISAT
A Division of Tomarco Contractor Specialties

International Seismic Application Technology
14848 Northam Street, La Mirada, CA 90638
877-999-4728 (Toll Free) 714-523-0845 (fax)
www.isatsb.com

Rev. 7
03/17/17

Page
D6.2

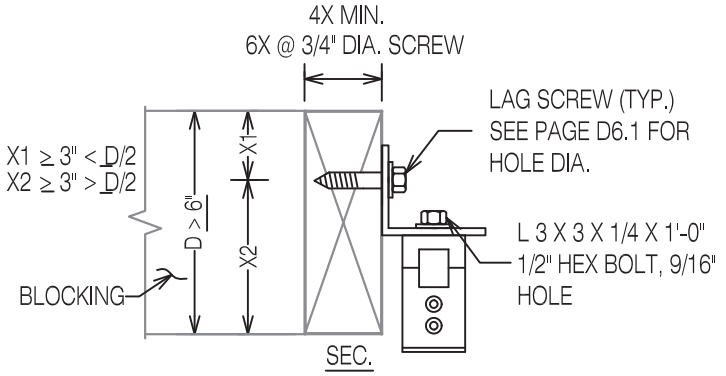

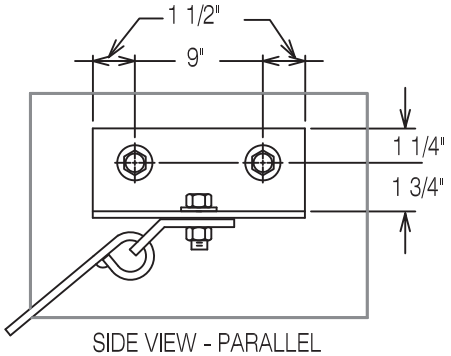

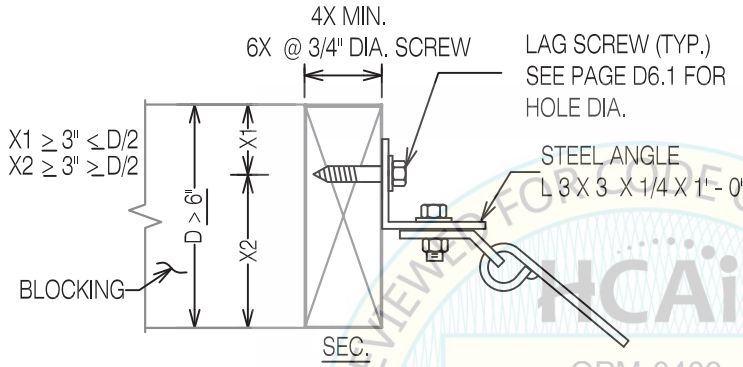

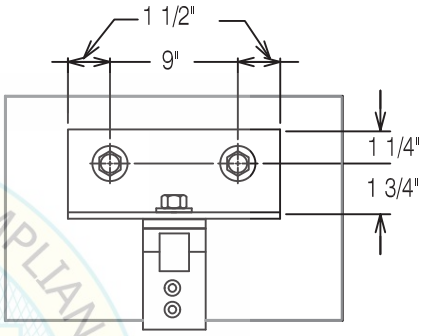

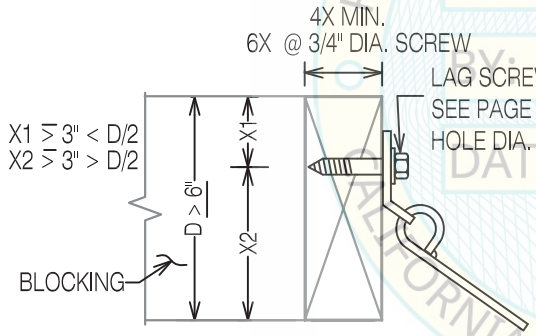

REFER TO INSTALLATION REQUIREMENTS, PAGE D6.1.
WOOD SPECIES SPECIFIC GRAVITY = 0.50 MIN.

NOTE: ENGINEER OF RECORD TO CONFIRM SUITABILITY OF STRUCTURE TO ACCOMMODATE THE LOADS SHOWN BELOW.

DESIGN AND DETAILING OF BLOCKING REQUIRED FOR STRUCTURAL STABILITY AND TIES TO HORIZONTAL DIAPHRAGM ARE TO BE BY THE STRUCTURAL ENGINEER OF RECORD (TYPICAL OF ALL CONFIGURATIONS).

MAX. ALLOWABLE BRACE LOAD
AT 45 DEGREE BRACE ANGLE
BASED ON ALLOWABLE LAG SCREW VALUES (NDS 2012)
SEISMIC DURATION FACTOR = 1.6

BOLT DIAMETER	PARALLEL 1 SCREW	PARALLEL 2 SCREWS	PERPENDICULAR 1 SCREW	PERPENDICULAR 2 SCREWS
1/2" X 3 1/2"	550 Lbs.	650 Lbs.	600 Lbs.	1,200 Lbs.
5/8" X 3 1/2"	600 Lbs.	700 Lbs.	625 Lbs.	1,250 Lbs.
3/4" X 5 1/2"	1,100 Lbs.	1,500 Lbs.	1,200 Lbs.	2,400 Lbs.

HCAi
OPM-0403
REVIEWED FOR CODE COMPLIANCE
BY: William Staehlin
DATE: 01.26.2024
CALIFORNIA BUILDING CODE

LAG SCREW CONNECTIONS TO STRUCTURAL LUMBER

REGISTERED PROFESSIONAL ENGINEER
MARCIN WASAZNIK
S 6612
STRUCTURAL
STATE OF CALIFORNIA

ISAT
A Division of Tomarco Contractor Specialties

International Seismic Application Technology
14848 Northam Street, La Mirada, CA 90638
877-999-4728 (Toll Free) 714-523-0845 (fax)
www.isatsb.com

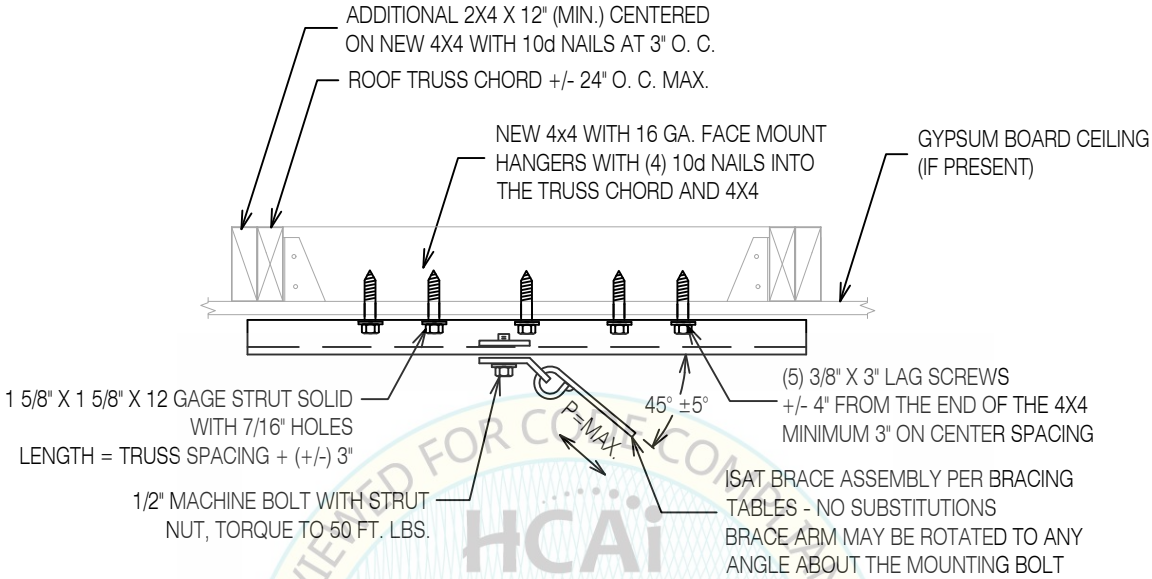

REVIEWED FOR CODE COMPLIANCE
HCAi
OPM-0403
By: William Staehlin
DATE: 01/26/2024
CALIFORNIA BUILDING CODE, 2022

P MAX. = 600 LBS. FOR RIGID BRACING
P MAX. = 810 LBS. FOR CABLE BRACING

DESIGN AND DETAILING OF BLOCKING REQUIRED FOR STRUCTURAL STABILITY AND TIES TO HORIZONTAL DIAPHRAGM ARE TO BE BY THE STRUCTURAL ENGINEER OF RECORD.

REFER TO INSTALLATION REQUIREMENTS, PAGE D6.1.
WOOD SPECIES SPECIFIC GRAVITY = 0.50

ENGINEER OF RECORD TO CONFIRM SUITABILITY OF STRUCTURE TO ACCOMMODATE THE LOADS SHOWN.

WOOD TRUSS DETAILS FOR SEISMIC BRACE CONNECTIONS

REGISTERED PROFESSIONAL ENGINEER MARCIN WASAZNIK S 6612 STRUCTURAL STATE OF CALIFORNIA

ISAT
A Division of Tomarco Contractor Specialties
International Seismic Application Technology
14848 Northam Street, La Mirada, CA 90638
877-999-4728 (Toll Free) 714-523-0845 (fax)
www.isatsb.com

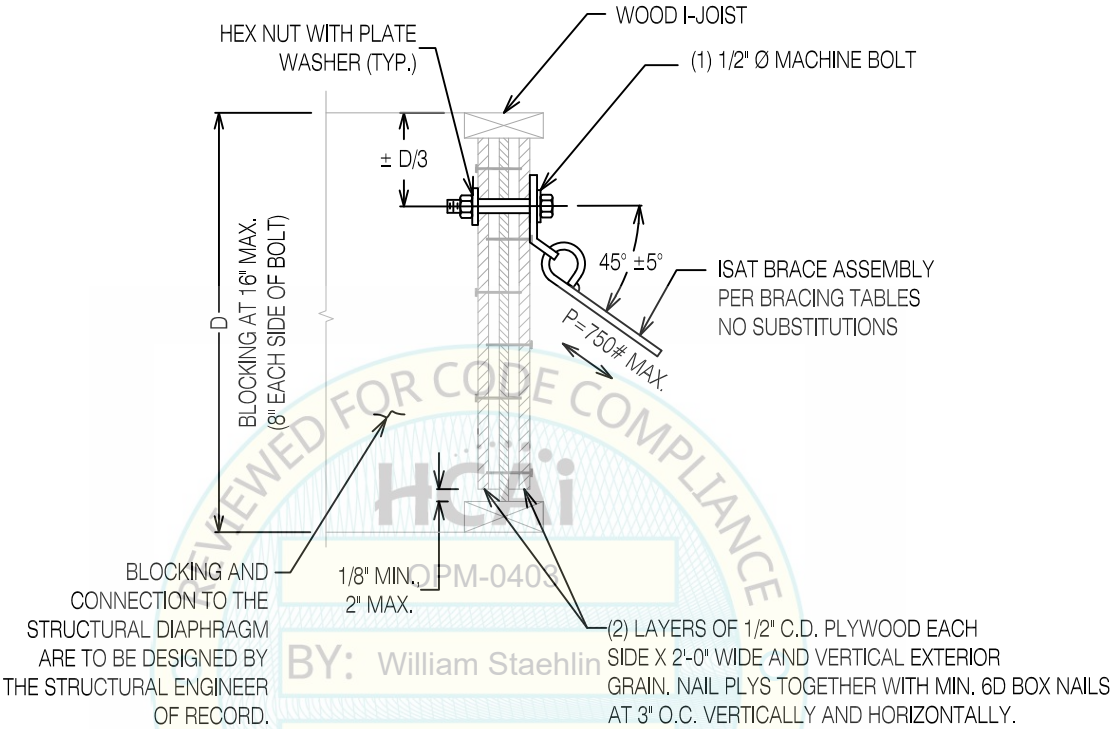

REVIEWED FOR CODE COMPLIANCE
HCAi
OPM-0403
BY: William Staehlin
DATE: 01-26-2024
CALIFORNIA BUILDING CODE 2022

STRUCTURAL ENGINEER OF RECORD TO CONFIRM SUITABILITY OF STRUCTURE TO ACCOMMODATE THE LOADS SHOWN .

WOOD JOIST WITH BRACE ARM PERPENDICULAR TO JOIST

REGISTERED PROFESSIONAL ENGINEER MARCIN WASAZNIK S 6612 STRUCTURAL STATE OF CALIFORNIA

ISAT
A Division of Tomarco Contractor Specialties
International Seismic Application Technology
14848 Northam Street, La Mirada, CA 90638
877-999-4728 (Toll Free) 714-523-0845 (fax)
www.isatsb.com

Rev. 7
02/22/18

Page
D7.1

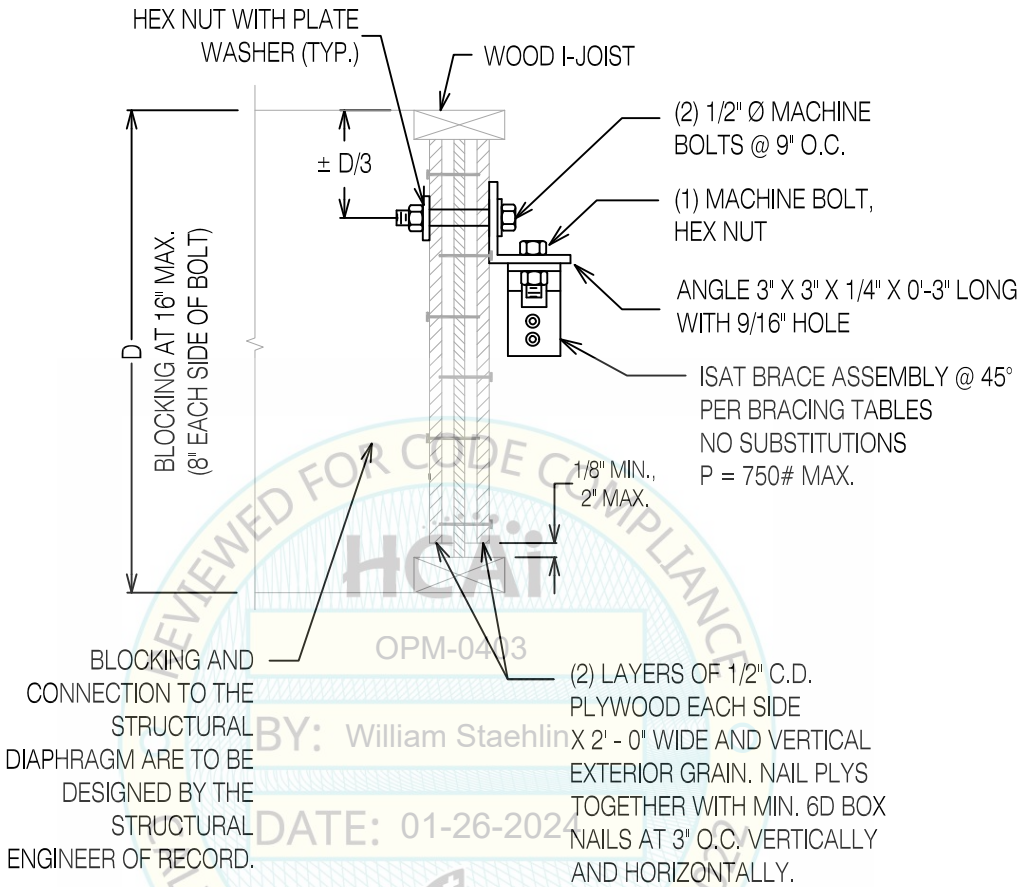

REVIEWED FOR CODE COMPLIANCE
OPM-0403
BY: William Staehlin
DATE: 01-26-2024
CALIFORNIA BUILDING CODE, 2019

STRUCTURAL ENGINEER OF RECORD TO CONFIRM SUITABILITY OF STRUCTURE TO ACCOMMODATE THE LOADS SHOWN .

WOOD JOIST WITH BRACE ARM PARALLEL TO JOIST

REGISTERED PROFESSIONAL ENGINEER MARCIN WASAZNIK S 6612 STRUCTURAL STATE OF CALIFORNIA

ISAT
A Division of Tomarco Contractor Specialties

International Seismic Application Technology
14848 Northam Street, La Mirada, CA 90638
877-999-4728 (Toll Free) 714-523-0845 (fax)
www.isatsb.com

Rev. 7
02/22/18

Page
D7.2

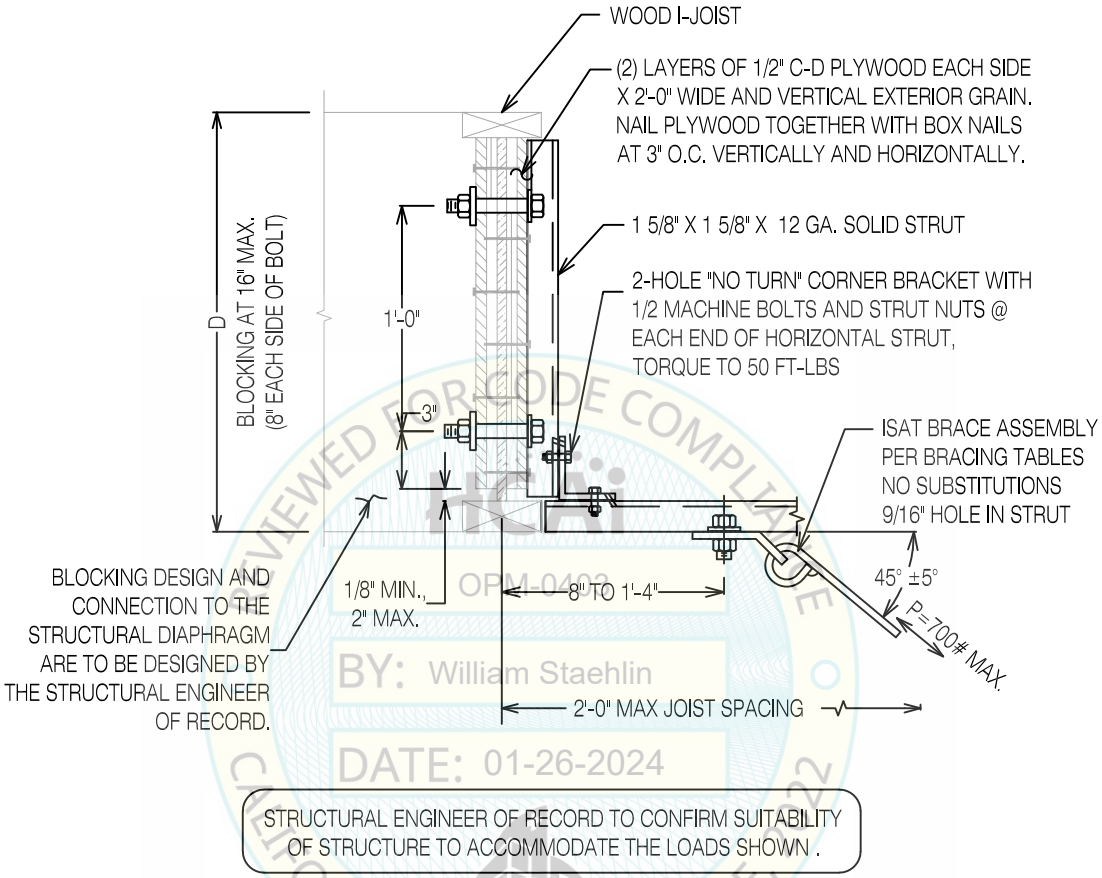

REVIEWED FOR CODE COMPLIANCE
ISAT
OPM-0403
BY: William Staehlin
DATE: 01-26-2024
CALIFORNIA BUILDING CODE 2022

STRUCTURAL ENGINEER OF RECORD TO CONFIRM SUITABILITY OF STRUCTURE TO ACCOMMODATE THE LOADS SHOWN .

WOOD JOIST WITH BRACE ARM CONNECTION TO STRUT

REGISTERED PROFESSIONAL ENGINEER MARCIN WASAZNIK S 6612 STRUCTURAL STATE OF CALIFORNIA

ISAT
A Division of Tomarco Contractor Specialties

International Seismic Application Technology
14848 Northam Street, La Mirada, CA 90638
877-999-4728 (Toll Free) 714-523-0845 (fax)
www.isatsb.com

Rev. 7
02/22/18

Page
D7.3

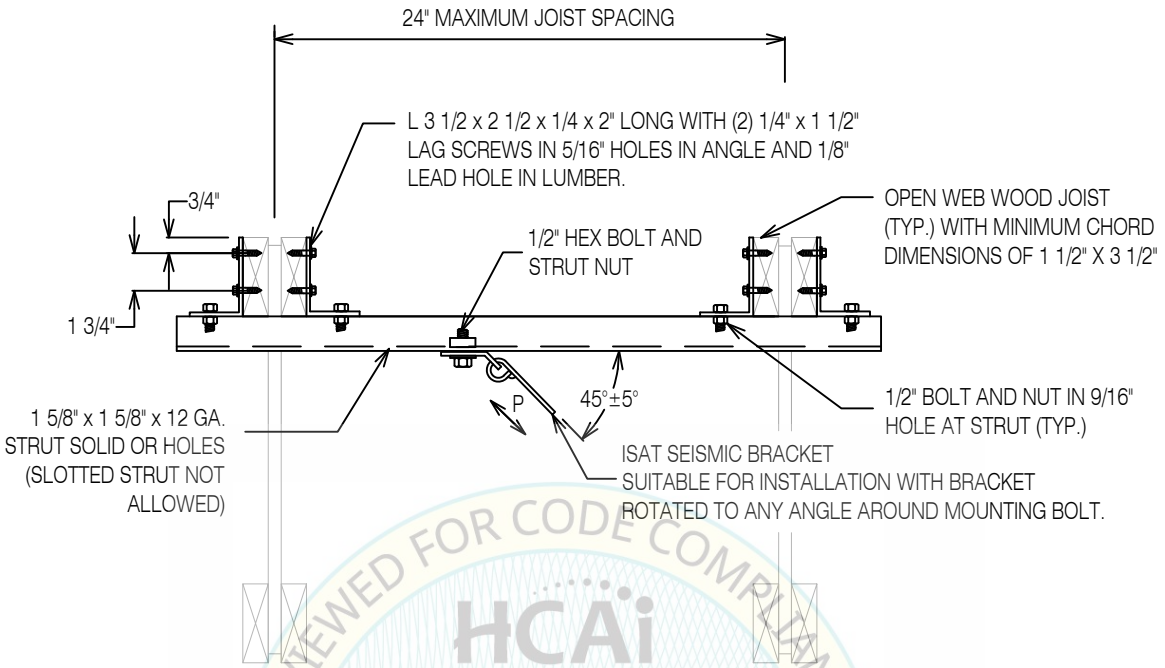

STRUT	SPACING - INCH	P MAX. - LBS. [1]	BRACE LOCATION
SOLID	24	500	ANY LOCATION
HOLES	24	450	ANY LOCATION
SOLID	16	800	MIN. 6" FROM JOIST
HOLES	16	700	MIN. 6" FROM JOIST
SOLID	16	500	ANY LOCATION
HOLES	16	450	ANY LOCATION

1. ALLOWABLE P MAX. BRACE LOAD IS TO BE REDUCED BY 50 PERCENT WHEN ONE ANGLE AND ONE SET OF LAG SCREWS ARE USED AT EACH JOIST.

STRUCTURAL ENGINEER OF RECORD TO CONFIRM SUITABILITY OF STRUCTURE TO ACCOMMODATE THE LOADS SHOWN.

REVIEWED FOR CODE COMPLIANCE
HCAi
OPM-0403
BY: William Staehlin
DATE: 01-26-2024
CALIFORNIA FEDERAL CODE, 2019

SPANNING OPEN WEB WOOD JOISTS
SEISMIC BRACE CONNECTION

REGISTERED PROFESSIONAL ENGINEER MARCIN WASAZNIK S 6612 STRUCTURAL STATE OF CALIFORNIA

ISAT
A Division of Tomarco Contractor Specialties

International Seismic Application Technology
14848 Northam Street, La Mirada, CA 90638
877-999-4728 (Toll Free) 714-523-0845 (fax)
www.isatsb.com

Rev. 7
07/16/18

Page
D7.4

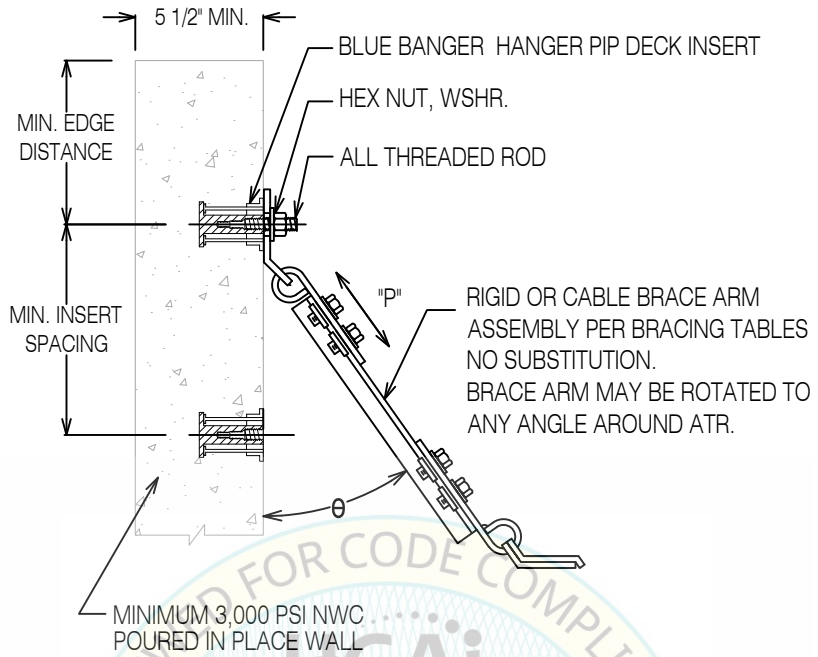

REVIEWED FOR CODE COMPLIANCE
HCAi
OPM-0403
BY: William Staehlin
DATE: 01-26-2024
CALIFORNIA BUILDING CODE 2022

Blue Banger Hanger Poured-In-Place (PIP) Insert
Seismically Qualified for Anchorage In Cracked Concrete
Seismic Design Categories D, E and F
ICC Report No. ESR-3599 (November, 2017), Table 1

Brace Anchorage Designation	Deck Insert Part No.	All Thread Rod Dia. (ATR) Inch	Minimum Concrete Strength psi	Maximum Brace Reaction (Fp) [1]						Nominal Insert Height Inch	Minimum Edge Distance Inch
				6" Min. [2] Lbs		5" Min. [2] Lbs		4" Min. [2] Lbs			
				0°≤ θ ≤ 45°	45°< θ ≤ 90°	0°≤ θ ≤ 45°	45°< θ ≤ 90°	0°≤ θ ≤ 45°	45°< θ ≤ 90°		
N6B3	PIP143812-2	1/2	3,000	736	729	695	689	630	624	2	6
N6.1B3	PIP381258-2	5/8		783	776	726	719	659	652		
N7B4	PIP143812-2	1/2	4,000	850	842	803	795	727	720		
N7.1B4	PIP381258-2	5/8		905	896	838	830	761	753		
N8B5	PIP143812-2	1/2	5,000	951	941	898	889	813	805		
N8.1B5	PIP381258-2	5/8		1,011	1,001	937	1,001	851	842		
N8B6	PIP143812-2	1/2	6,000	1,044	1,031	986	974	893	882		
N9B6	PIP381258-2	5/8		1,111	1,097	1,029	1,016	934	923		

1. LOAD VALUES SHOWN ARE ALLOWABLE STRESS DESIGN (ASD). CAPACITIES DERIVED IN CONFORMANCE WITH ASCE 7-10, PIN 62 & ACI 318-11, Appendix D. Ωo=2.0
2. MINIMUM INSERT SPACING

CONCRETE WALL - PIP SEISMIC CONNECTION

REGISTERED PROFESSIONAL ENGINEER MARCIN WASAZNIK S 6612 STRUCTURAL STATE OF CALIFORNIA

ISAT
A Division of Tomarco Contractor Specialties
International Seismic Application Technology
14848 Northam Street, La Mirada, CA 90638
877-999-4728 (Toll Free) 714-523-0845 (fax)
www.isatsb.com

Rev. 7
07/03/18
Page
D8.1

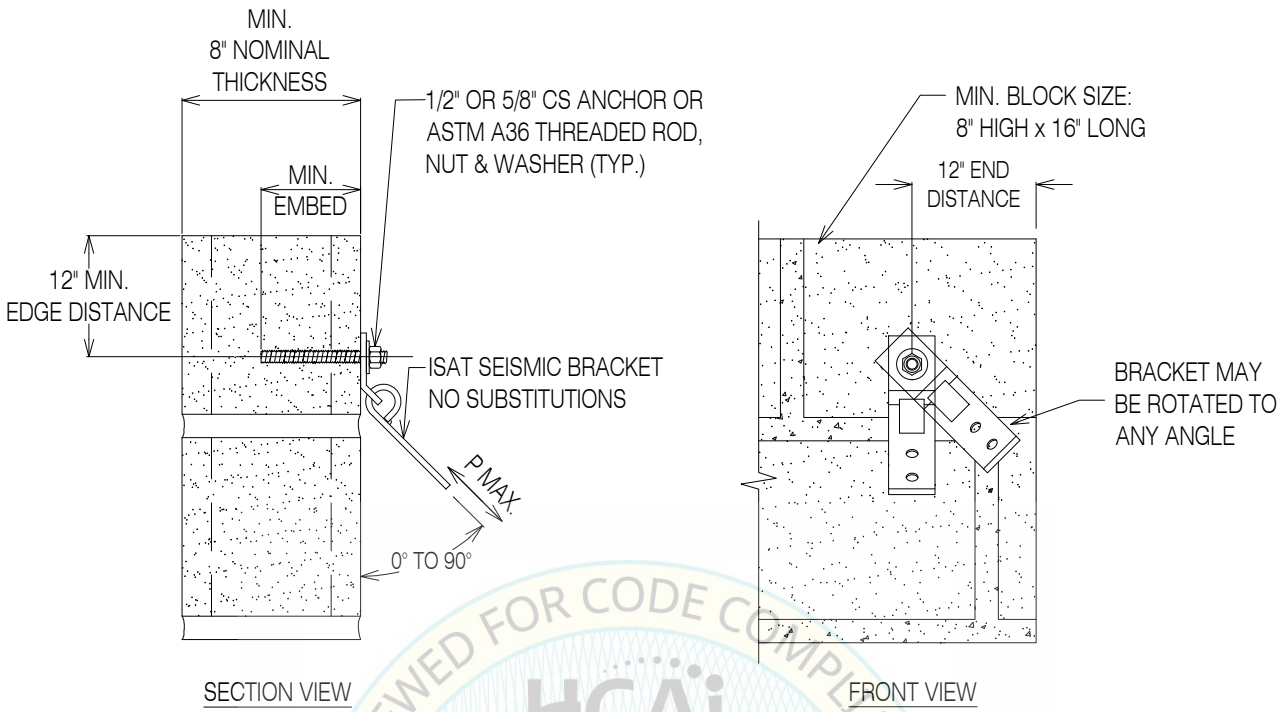

Anchor Type	ESR Report No.	Anchor Dia. Inch	h_{ef} Min. Embed[9] Inch	Installation Torque Ft-Lbs.	Clearance From Centers of Web, Edge of Head Joint, or Bed Joint Inch	P Max. Tension/Shear Lbs.	Pull Test Loads Lbs.
HILTI HIT HY 270 ADHESIVE[9]	4143	1/2	4 1/2	N/A	No restrictions except one anchor per cell	645	1350
		5/8	5 5/8	N/A		425	1420
HILTI KB-TZ2 CS	4561	1/2	3 1/4	25	1 3/8	270	540
		5/8	2 3/4	30		345	695
DEWALT SCREW-BOLT+	4042	1/2	2 1/2	N/A	1 1/4	295	585
		5/8	3 1/4	N/A		400	845

1. ANCHORS ARE LIMITED TO ONE PER CELL.; f'm (@ 28 DAYS) ≥ 1500 psi; TYPE I, GRADE N, LIGHT WEIGHT, MEDIUM WEIGHT OR NORMAL WEIGHT CMU CONFORMING TO ASTM C90. CLOSED END UNITS FOR DEWALT SCREW-BOLT +
2. MINIMUM ANCHOR SPACING = 8".
3. ANCHORS ARE TO BE INSTALLED AT ANY LOCATION ON THE MASONRY FACE SHELL.
4. P MAX. = LOAD VALUES FOR ANGLES 0° TO 90°
5. TO SATISFY CONDITIONS OF USE PER EACH OF ICC-ESR, SEOR SHALL SUBMIT CALCULATIONS TO DEMONSTRATE THE FOLLOWING:
   a. THE MASONRY WALL IS NOT CRACKED AS DEFINED IN ICC-ES AC-01 §2.3 AND
   b. THE MASONRY WALL WILL NOT CRACK UNDER THE DESIGN EARTHQUAKE LOADS UNDER ALL SERVICE LOAD LOAD CONDITIONS: i.e. WALL REMAINS ELASTIC
6. CONDITION OF USE REQUIREMENTS IN ACCORDANCE WITH ESR REPORT, SECTION 5.0
7. REFER TO PAGE 2.6 FOR PULL TEST REQUIREMENTS.
8. LOAD VALUES SHOWN ARE ALLOWABLE STRESS DESIGN (ASD). CAPACITIES DERIVED IN CONFORMANCE WITH ASCE 7-16 & ACI 318, Ω_o = 2.5
9. EMBEDMENT DEPTH IS MEASURED FROM THE OUTSIDE FACE OF THE CONCRETE MASONRY UNIT.

SINGLE ANCHOR IN UNCRACKED, FULLY GROUTED 8" MIN. CMU WALL SEISMIC BRACE CONNECTION

REVIEWED FOR CODE COMPLIANCE
HCAi
OPM-0403
BY William Staehlin
DATE 01-26-2024
CALIFORNIA BUILDING CODE 2022

REGISTERED PROFESSIONAL ENGINEER
MARCIN WASAZNIK
S 6612
STRUCTURAL
STATE OF CALIFORNIA

ISAT
A Division of Tomarco Contractor Specialties

International Seismic Application Technology
14848 Northam Street, La Mirada, CA 90638
877-999-4728 (Toll Free) 714-523-0845 (fax)
www.isatsb.com

Rev. 9
09/07/2023

Page
D8.2

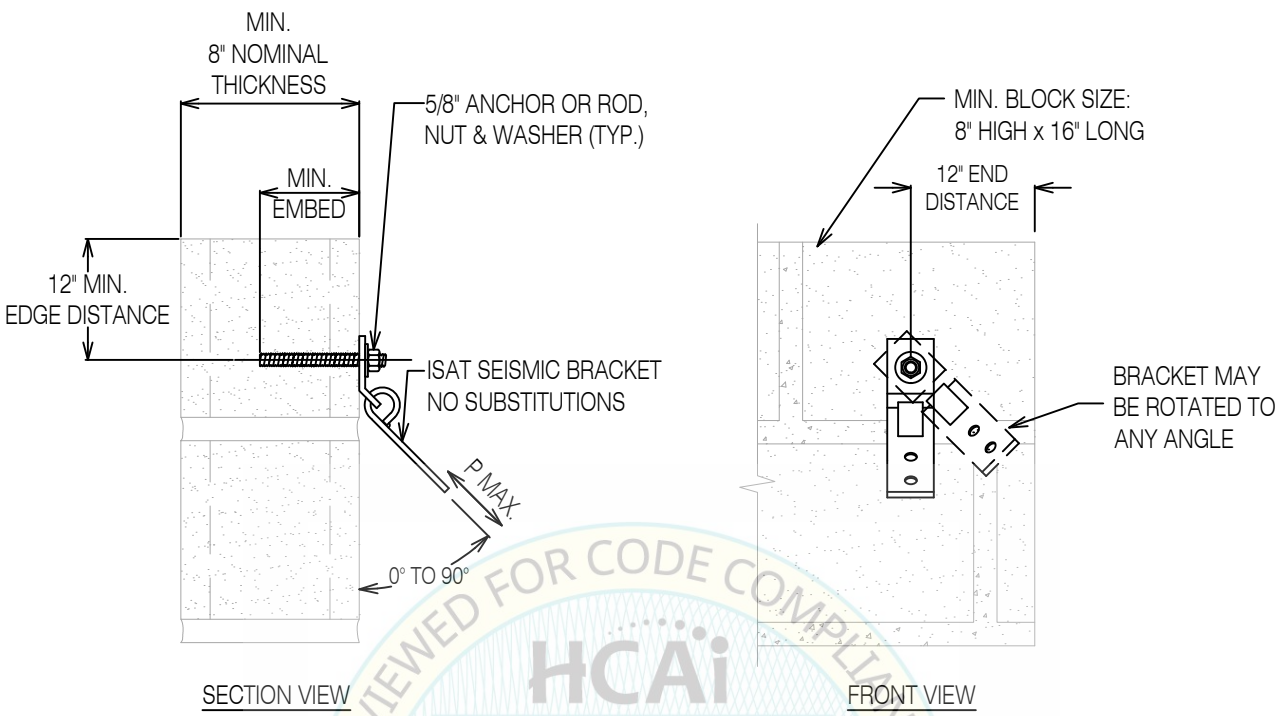

REVIEWED FOR CODE COMPLIANCE
HCAi
OPM-0403
BY: William Staehlin
DATE: 01-26-2024
CALIFORNIA BUILDING CODE 2022

Anchor Type	ESR Report No.	Anchor Dia. Inch	Min. Embed Inch	Installation Torque Ft-Lbs.	Combined Tension/Shear Lbs.
HILTI HIT HY 70 ADHESIVE	2682	5/8	5 5/8	-	430
HILTI KWIK BOLT 3 EXPANSION	1385	5/8	4	65	496
POWERS WEDGE-BOLT SCREW	1678	5/8	5	-	510

1. ANCHORS ARE LIMITED TO ONE PER CELL; f'm (@ 28 DAYS) ≥ 1500 psi; TYPE I, GRADE N, LIGHT WEIGHT, MEDIUM WEIGHT OR NORMAL WEIGHT CMU CONFORMING TO ASTM C90.
2. MINIMUM ANCHOR SPACING = 8".
3. ANCHORS ARE TO BE INSTALLED AT ANY LOCATION ON THE MASONRY FACE SHELL. ANCHORS MAY NOT BE LOCATED WITHIN 1 1/2" OF THE CENTERS OF THE WEB, HEAD JOINT, OR BED JOINT.
4. P MAX. = LOAD VALUES FOR ANGLES 0° TO 90°.
5. TO SATISFY CONDITIONS OF USE PER EACH OF ICC-ES ESR, SEOR SHALL SUBMIT CALCULATIONS TO DEMONSTRATE THE FOLLOWING:
   a. THE MASONRY WALL IS NOT CRACKED AS DEFINED IN ICC-ES AC-01 §2.3 AND
   b. THE MASONRY WALL WILL NOT CRACK UNDER THE DESIGN EARTHQUAKE LOADS UNDER ALL SERVICE LOAD LOAD CONDITIONS: i.e WALL REMAINS ELASTIC
6. CONDITION OF USE REQUIREMENTS IN ACCORDANCE WITH ESR REPORT, SECTION 5.0

SINGLE ANCHOR IN UNCRACKED, FULLY GROUTED 12" CMU WALL SEISMIC BRACE CONNECTION

REGISTERED PROFESSIONAL ENGINEER
MARCIN WASAZNIK
S 6612
STRUCTURAL
STATE OF CALIFORNIA

ISAT
A Division of Tomarco Contractor Specialties
International Seismic Application Technology
14848 Northam Street, La Mirada, CA 90638
877-999-4728 (Toll Free) 714-523-0845 (fax)
www.isatsb.com

Rev. 7
06/22/18

Page
D8.3

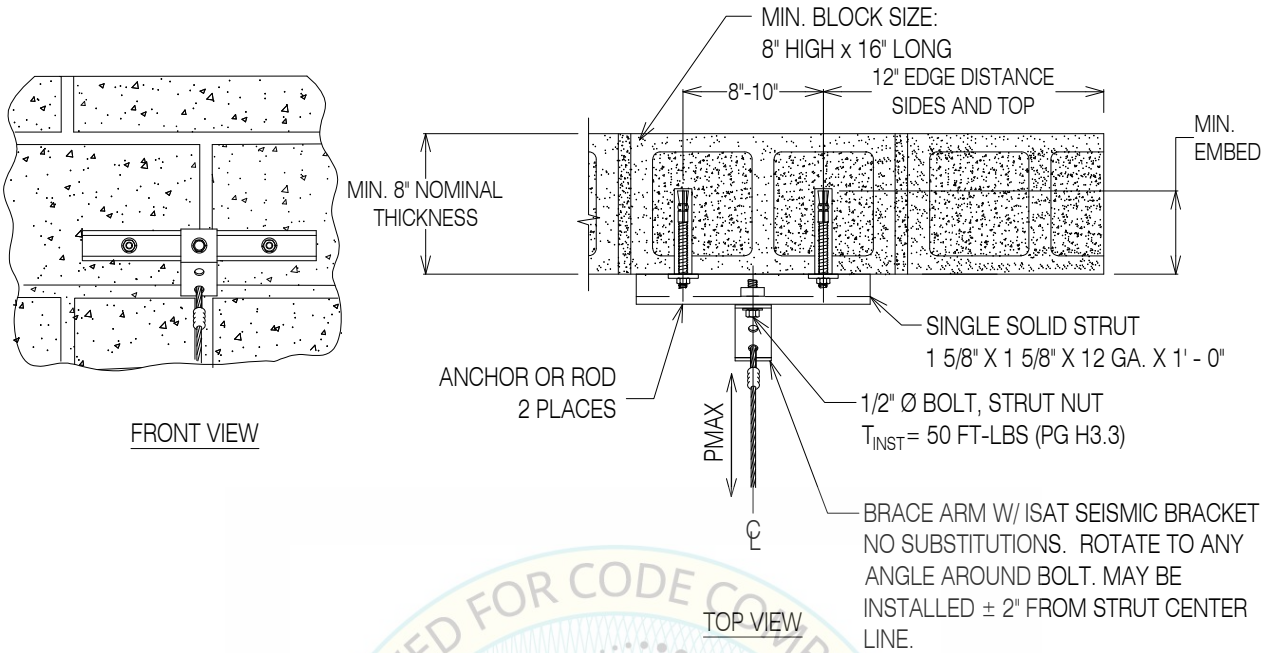

Anchor Type	ESR Report No.	Anchor Dia. Inch	h_{ef} Min. Embed[9] Inch	Installation Torque Ft-Lbs.	Clearance From Centers of Web, Head Joint, or Bed Joint Inch	P Max. Tension/Shear Lbs.	Pull Test Loads Lbs.
HILTI HIT HY 270 ADHESIVE[9]	4143	1/2	4 1/2	N/A	No restrictions except one anchor per cell	850	1350
		5/8	5 5/8	N/A		730	1420
HILTI KB-TZ2 CS	4561	1/2	3 1/4	25	1 3/8	390	540
		5/8	2 3/4	30		525	695
DEWALT SCREW-BOLT+	4042	1/2	2 1/2	N/A	1 1/4	470	585
		5/8	3 1/4	N/A		685	845

1. ANCHORS ARE LIMITED TO ONE PER CELL.; f'm (@ 28 DAYS) ≥ 1500 psi; TYPE I, GRADE N, LIGHT WEIGHT, MEDIUM WEIGHT OR NORMAL WEIGHT CMU CONFORMING TO ASTM C90. CLOSED END UNITS FOR DEWALT SCREW-BOLT +
2. MINIMUM ANCHOR SPACING = 8".
3. ANCHORS ARE TO BE INSTALLED AT ANY LOCATION ON THE MASONRY FACE SHELL.
4. P MAX. = LOAD VALUES FOR ANGLES 0° TO 90°
5. TO SATISFY CONDITIONS OF USE PER EACH OF ICC-ESR, SEOR SHALL SUBMIT CALCULATIONS TO DEMONSTRATE THE FOLLOWING:
   a. THE MASONRY WALL IS NOT CRACKED AS DEFINED IN ICC-ES AC-01 §2.3 AND
   b. THE MASONRY WALL WILL NOT CRACK UNDER THE DESIGN EARTHQUAKE LOADS UNDER ALL SERVICE LOAD LOAD CONDITIONS: i.e. WALL REMAINS ELASTIC
6. CONDITION OF USE REQUIREMENTS IN ACCORDANCE WITH ESR REPORT, SECTION 5.0
7. REFER TO PAGE 2.6 FOR PULL TEST REQUIREMENTS.
8. LOAD VALUES SHOWN ARE ALLOWABLE STRESS DESIGN (ASD). CAPACITIES DERIVED IN CONFORMANCE WITH ASCE 7-16 & ACI 318, Ω_o = 2.5
9. EMBEDMENT DEPTH IS MEASURED FROM THE OUTSIDE FACE OF THE CONCRETE MASONRY UNIT.

DUAL ANCHOR IN UNCRACKED, FULLY GROUTED 8" MIN. CMU WALL SEISMIC BRACE CONNECTION

REVIEWED FOR CODE COMPLIANCE
HCAi
OPM-0403
BY William Staehlin
DATE: 1-26-2024
CALIFORNIA BUILDING CODE, 2022

REGISTERED PROFESSIONAL ENGINEER
MARCIN WASAZNIK
S 6612
STRUCTURAL
STATE OF CALIFORNIA

ISAT
A Division of Tomarco Contractor Specialties

International Seismic Application Technology
14848 Northam Street, La Mirada, CA 90638
877-999-4728 (Toll Free) 714-523-0845 (fax)
www.isatsb.com

Rev. 9
09/07/2023

Page
D8.4

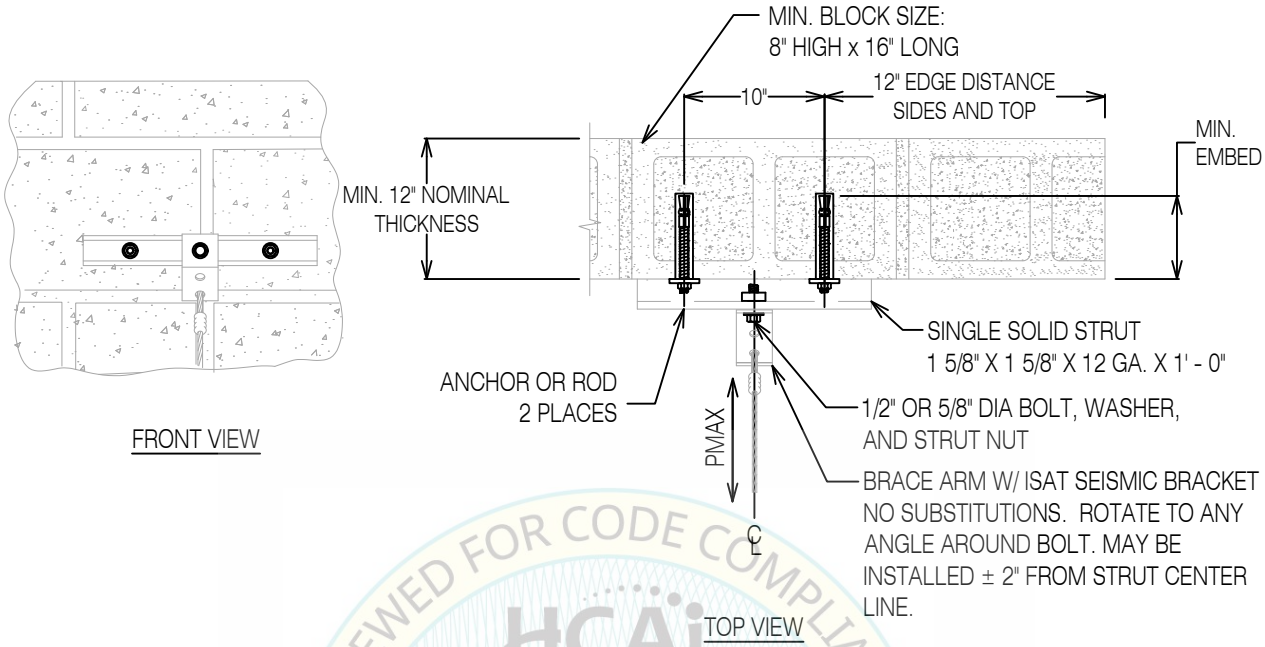

Anchor Type	ESR Report No.	Anchor Dia. Inch	Min. Embed Inch	Installation Torque Ft-Lbs.	P Max. Tension/Shear Lbs.
HILTI HIT HY 70 ADHESIVE	2682	5/8	5 5/8	-	610
HILTI KWIK BOLT 3 EXPANSION	1385	1/2	3 1/2	25	620
		5/8	4	65	850
POWERS WEDGE-BOLT SCREW	1678	1/2	4	-	610
		5/8	5	-	730

1. ANCHORS ARE LIMITED TO ONE PER CELL; f'm (@ 28 DAYS) ≥ 1500 psi; TYPE I, GRADE N, LIGHT WEIGHT, MEDIUM WEIGHT OR NORMAL WEIGHT CMU CONFORMING TO ASTM C90.
2. MINIMUM ANCHOR SPACING = 8".
3. ANCHORS ARE TO BE INSTALLED AT ANY LOCATION ON THE MASONRY FACE SHELL. ANCHORS MAY NOT BE LOCATED WITHIN 1 1/2" OF THE CENTERS OF THE WEB, HEAD JOINT, OR BED JOINT.
4. P MAX. = LOAD VALUES FOR ANGLES 0° TO 90°.
5. TO SATISFY CONDITIONS OF USE PER EACH OF ICC-ES ESR, SEOR SHALL SUBMIT CALCULATIONS TO DEMONSTRATE THE FOLLOWING:
   a. THE MASONRY WALL IS NOT CRACKED AS DEFINED IN ICC-ES AC-01 §2.3 AND
   b. THE MASONRY WALL WILL NOT CRACK UNDER THE DESIGN EARTHQUAKE LOADS UNDER ALL SERVICE LOAD LOAD CONDITIONS: i.e WALL REMAINS ELASTIC
6. CONDITION OF USE REQUIREMENTS IN ACCORDANCE WITH ESR REPORT, SECTION 5.0

DUAL ANCHOR IN UNCRACKED, FULLY GROUTED 12" CMU WALL SEISMIC BRACE CONNECTION

REGISTERED PROFESSIONAL ENGINEER MARCIN WASAZNIK S 6612 STRUCTURAL STATE OF CALIFORNIA

ISAT
A Division of Tomarco Contractor Specialties

International Seismic Application Technology
14848 Northam Street, La Mirada, CA 90638
877-999-4728 (Toll Free) 714-523-0845 (fax)
www.isatsb.com

Rev. 7
06/22/18

Page
D8.5

REVIEWED FOR CODE COMPLIANCE
HCAi
OPM-0403
BY: William Staehlin
DATE: 01-26-2024
CALIFORNIA BUILDING CODE 2022

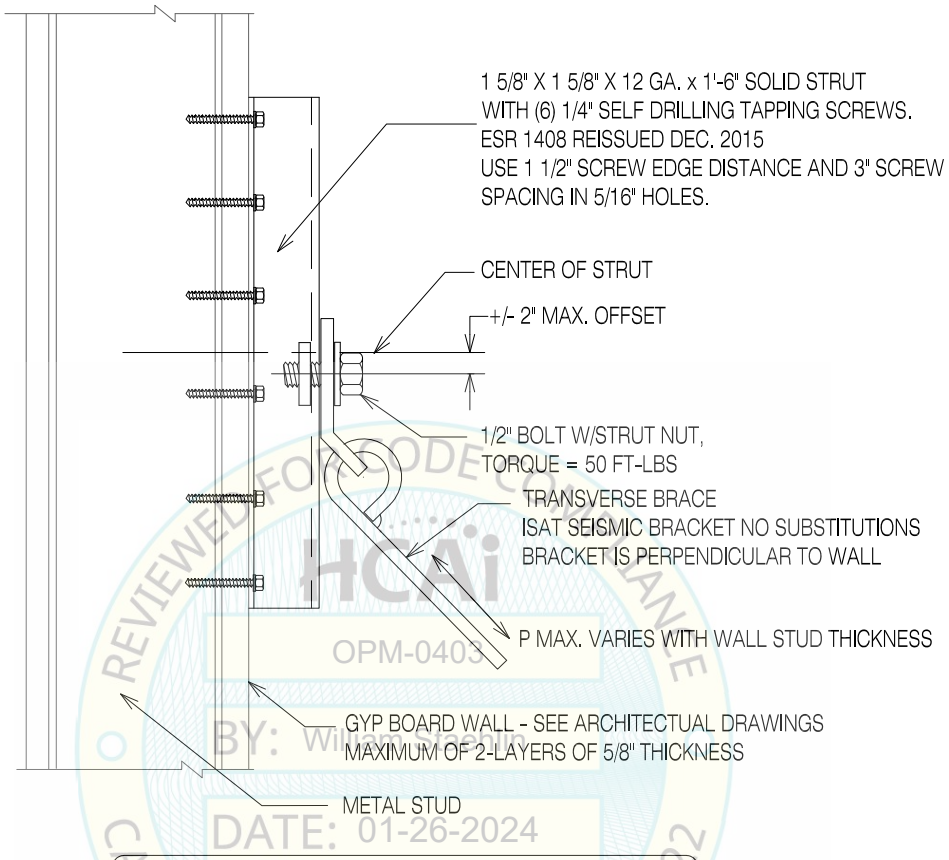

REVIEWED FOR CODE COMPLIANCE
HCAi
OPM-0403
BY: William Staehlin
DATE: 01-26-2024
CALIFORNIA BUILDING CODE 2022

PRIOR APPROVAL FROM ENGINEER OF RECORD REQUIRED
PRIOR TO INSTALLING SEISMIC BRACE CONNECTION.

WALL STUD THICKNESS	P MAX. - LBS.
33 MIL STRUCT (20 GA.)	250
43 MIL (18 GA.)	350
54 MIL (16 GA.)	400

NOTES:

1. SEOR SHALL DESIGN WALL STUDS & BACKING
2. SEOR TO PROVIDE SUPPORTING STRUCTURE TO SUPPORT FORCES SHOWN IN ADDITION TO ALL OTHER LOADS

METAL WALL STUD
TRANSVERSE SEISMIC BRACE CONNECTION

REGISTERED PROFESSIONAL ENGINEER
MARCIN WASAZNIK
S 6612
STRUCTURAL
STATE OF CALIFORNIA

ISAT
A Division of Tomarco Contractor Specialties
International Seismic Application Technology
14848 Northam Street, La Mirada, CA 90638
877-999-4728 (Toll Free) 714-523-0845 (fax)
www.isatsb.com

Rev. 8
3/16/2018

Page
D8.6

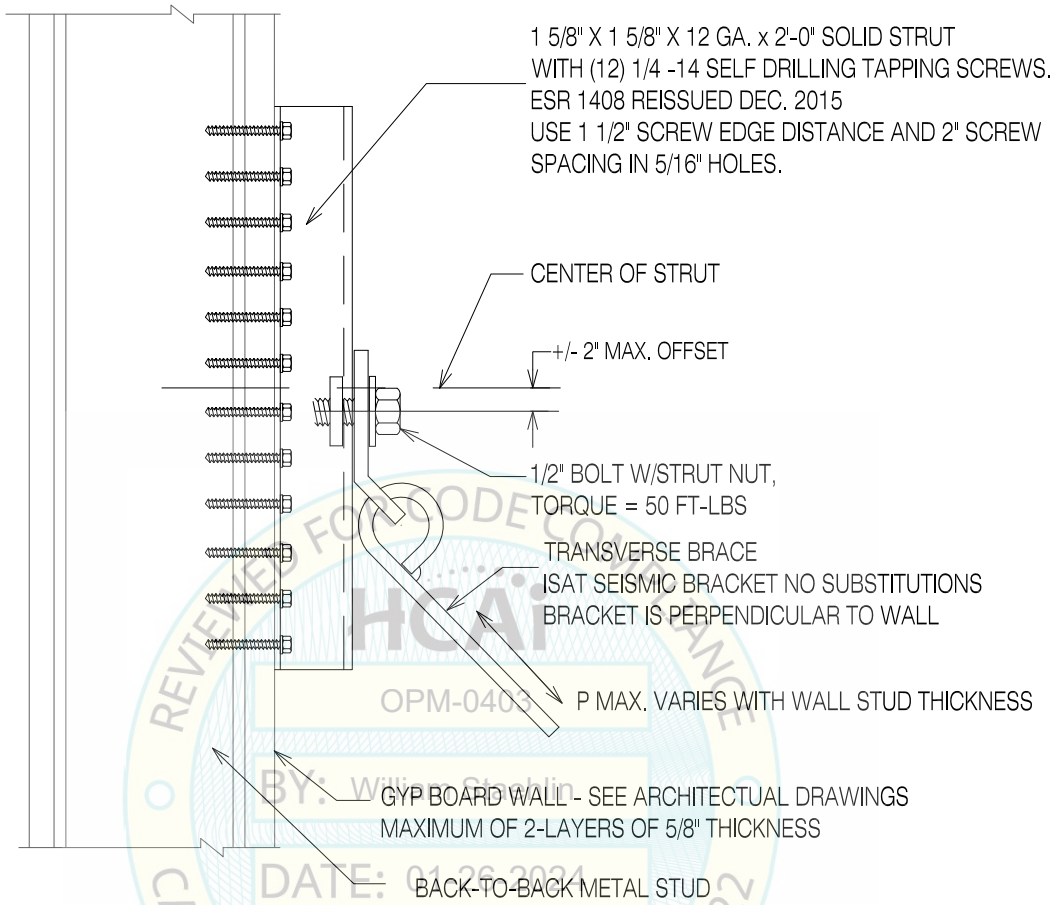

REVIEWED FOR CODE COMPLIANCE
HCAI
OPM-0403
BY: William Staehlin
DATE: 01-26-2024
CALIFORNIA BUILDING CODE 2022

PRIOR APPROVAL FROM ENGINEER OF RECORD REQUIRED
PRIOR TO INSTALLING SEISMIC BRACE CONNECTION.

WALL STUD THICKNESS	P MAX. - LBS.
2 X 33 MIL STRUCT (20 GA.)	450
2 X 43 MIL (18 GA.)	600
2 X 54 MIL (16 GA.)	700

NOTES:

1. SEOR SHALL DESIGN WALL STUDS & BACKING
2. SEOR TO PROVIDE SUPPORTING STRUCTURE TO SUPPORT FORCES SHOWN IN ADDITION TO ALL OTHER LOADS

BACK-TO-BACK METAL WALL STUD TRANSVERSE SEISMIC BRACE CONNECTION

REGISTERED PROFESSIONAL ENGINEER
MARCIN WASAZNIK
S 6612
STRUCTURAL
STATE OF CALIFORNIA

ISAT
A Division of Tomarco Contractor Specialties
International Seismic Application Technology
14848 Northam Street, La Mirada, CA 90638
877-999-4728 (Toll Free) 714-523-0845 (fax)
www.isatsb.com

Rev. 8
03/16/18

Page
D8.6.1

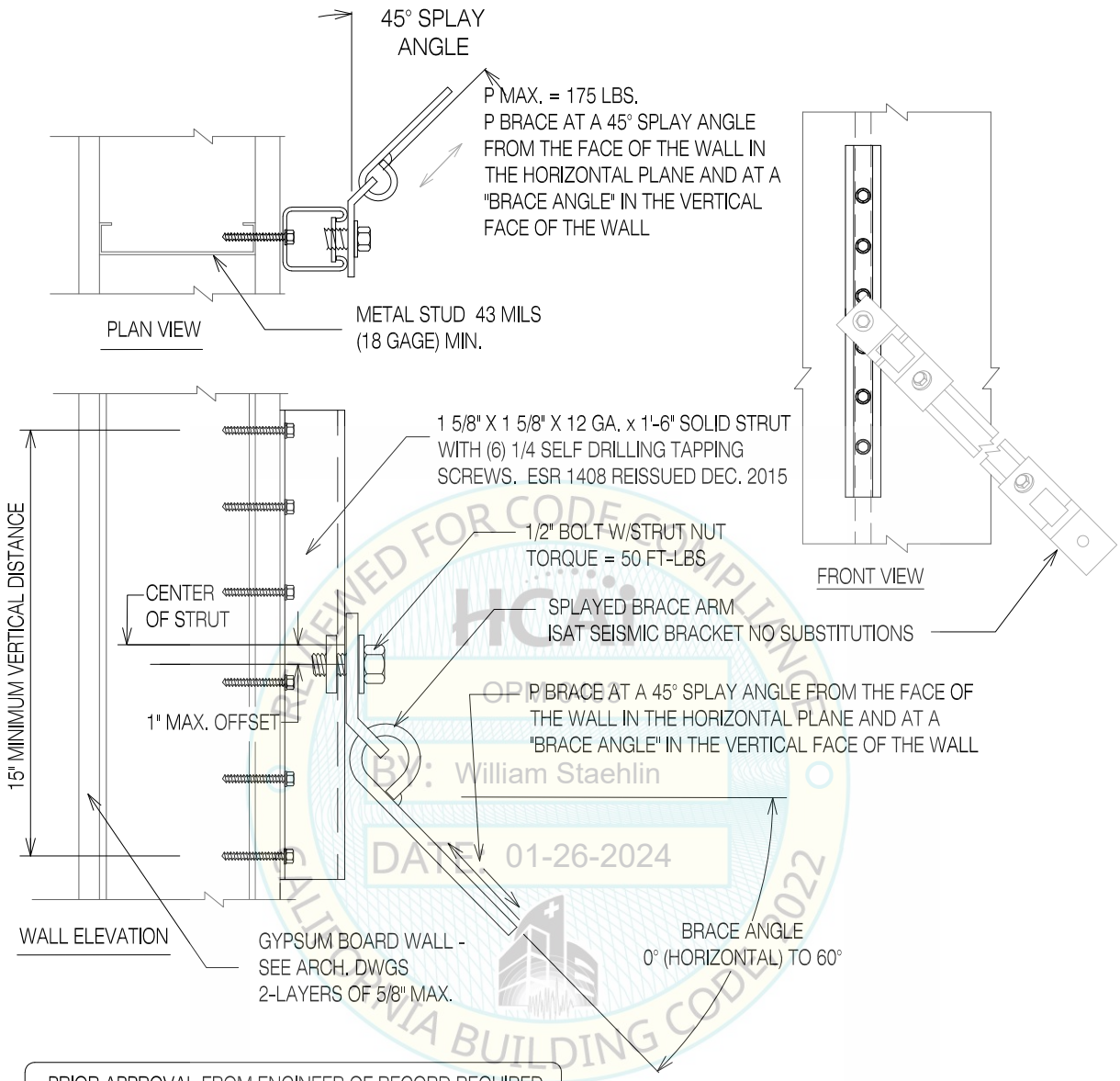

REVIEWED FOR CODE COMPLIANCE
HCAI
OPM-0403
BY: William Staehlin
DATE: 01-26-2024
CALIFORNIA BUILDING CODE 2022

PRIOR APPROVAL FROM ENGINEER OF RECORD REQUIRED PRIOR TO INSTALLING SEISMIC BRACE CONNECTION.

WALL STUD THICKNESS	P MAX. - LBS.
33 MIL STRUCT (20 GA.)	100
43 MIL (18 GA.)	150
54 MIL (16 GA.)	175

NOTES:

1. SEOR SHALL DESIGN WALL STUDS & BACKING
2. SEOR TO PROVIDE SUPPORTING STRUCTURE TO SUPPORT FORCES SHOWN IN ADDITION TO ALL OTHER LOADS

METAL WALL STUD SPLAYED SEISMIC BRACE CONNECTION

REGISTERED PROFESSIONAL ENGINEER MARCIN WASAZNIK S 6612 STRUCTURAL STATE OF CALIFORNIA

ISAT
A Division of Tomarco Contractor Specialties
International Seismic Application Technology
14848 Northam Street, La Mirada, CA 90638
877-999-4728 (Toll Free) 714-523-0845 (fax)
www.isatsb.com

PRIOR APPROVAL FROM ENGINEER OF RECORD REQUIRED PRIOR TO INSTALLING SEISMIC BRACE CONNECTION.

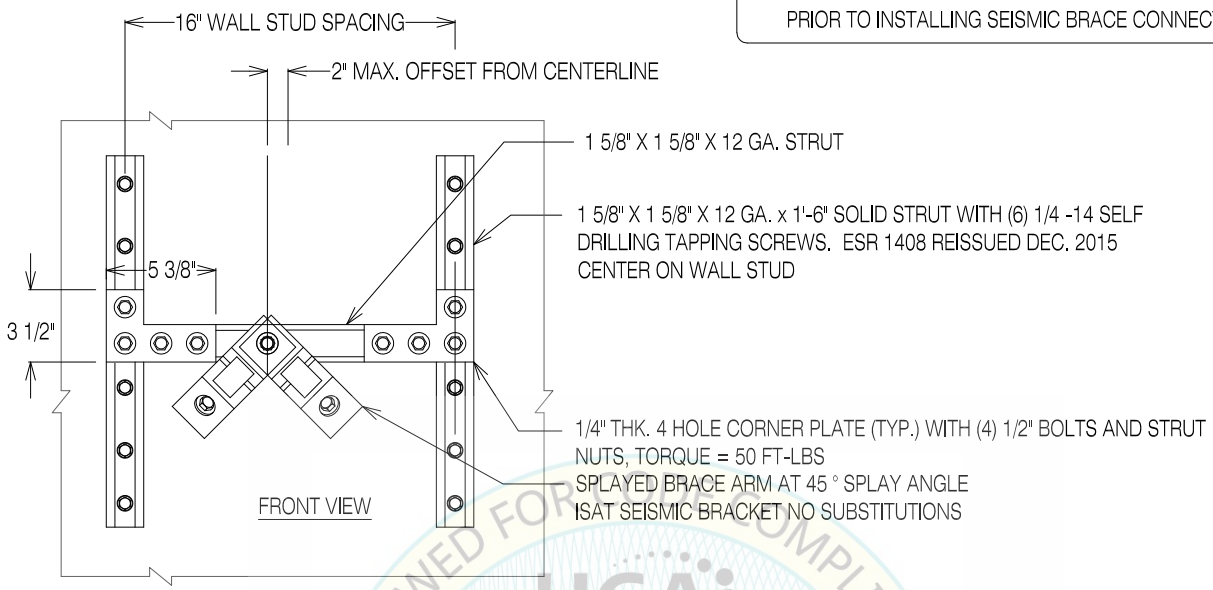

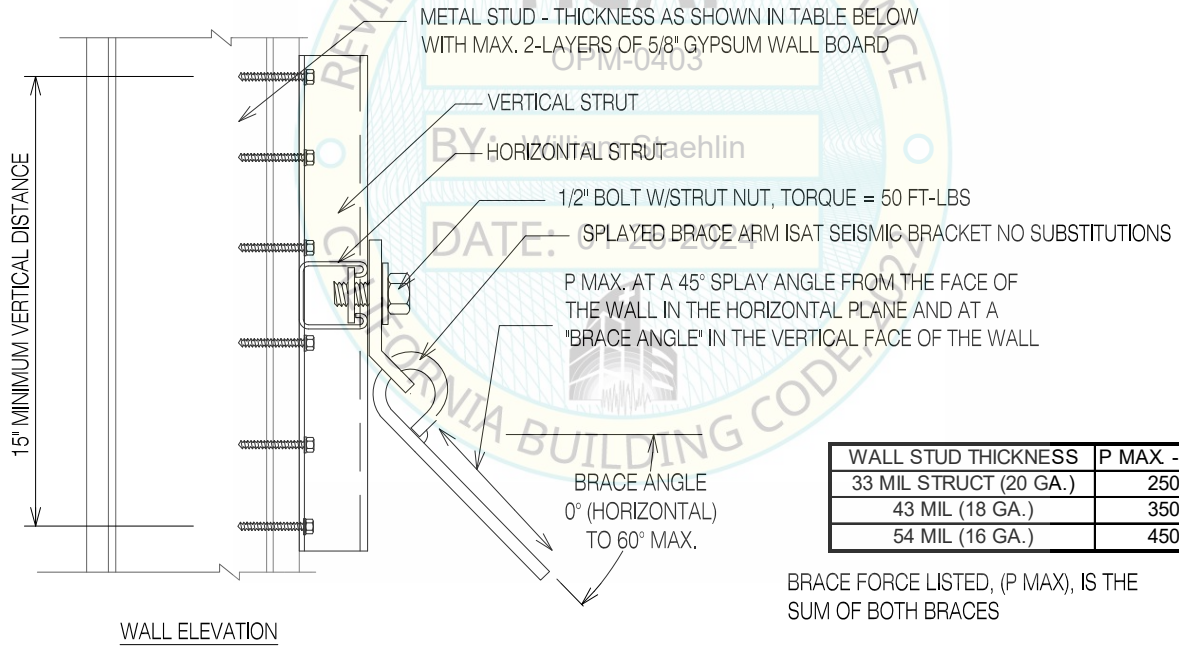

WALL STUD THICKNESS	P MAX. - LBS.
33 MIL STRUCT (20 GA.)	250
43 MIL (18 GA.)	350
54 MIL (16 GA.)	450

BRACE FORCE LISTED, (P MAX), IS THE SUM OF BOTH BRACES

REVIEWED FOR CODE COMPLIANCE
HCAi
OPM-0403
BY: William Staehlin
DATE: 01/26/2024
CALIFORNIA BUILDING CODE 2019

NOTES:

1. SEOR SHALL DESIGN WALL STUDS & BACKING
2. SEOR TO PROVIDE SUPPORTING STRUCTURE TO SUPPORT FORCES SHOWN IN ADDITION TO ALL OTHER LOADS

DUAL METAL WALL STUD SPLAYED SEISMIC BRACE CONNECTION

REGISTERED PROFESSIONAL ENGINEER MARCIN WASAZNIK S 6612 STRUCTURAL STATE OF CALIFORNIA

ISAT
A Division of Tomarco Contractor Specialties
International Seismic Application Technology
14848 Northam Street, La Mirada, CA 90638
877-999-4728 (Toll Free) 714-523-0845 (fax)
www.isatsb.com

Rev. 8
03/16/18

Page
D8.7.1

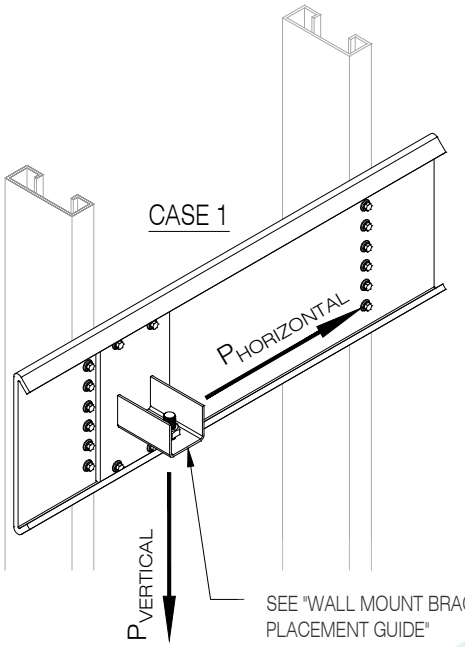

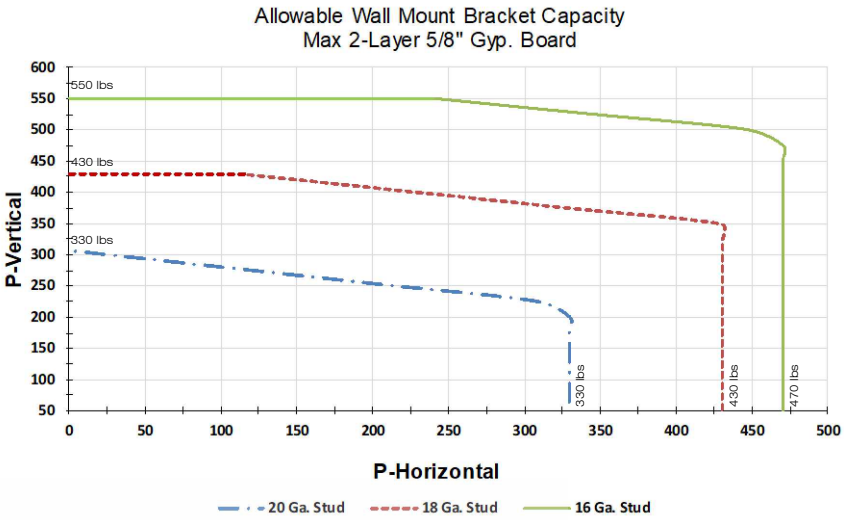

SEE "WALL MOUNT BRACKET PLACEMENT GUIDE" FOR ACCEPTABLE BRACKET (WMB) LOCATION ALONG WALL MOUNT PLATE (WMP)

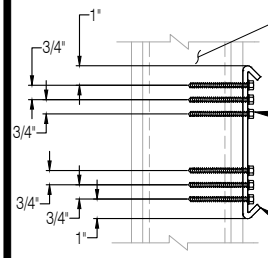

METAL STUD WITH GYPSUM WALL BOARD.

(6) 1/4" SELF DRILLING TAPPING SCREWS PER WALL STUD ICC ESR 1408 (DATED DEC. 2017)

ISAT WALL MOUNT PLATE (WMP) SEE PAGE F20 SPAN 2 STUDS MIN.

WALL MOUNT PLATE (WMP)

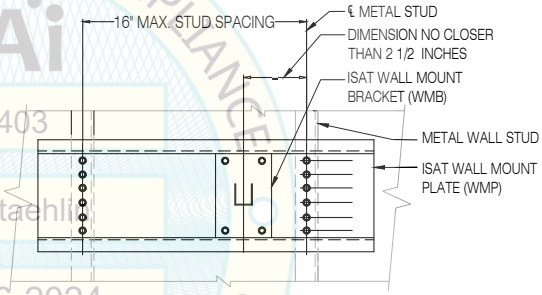

WALL MOUNT BRACKET PLACEMENT GUIDE

REVIEWED FOR CODE COMPLIANCE
HCAi
OPM-0403
BY: William Staehlin
DATE: 01-26-2024
CALIFORNIA BUILDING CODE 2022

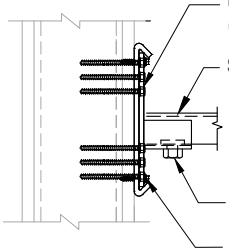

ISAT WALL MOUNT BRACKET (WMB) SEE PAGE F20

STRUT

1/2" BOLT W NUT OR /STRUT NUT
9/16" HOLE IN STRUT

(2) 1/4" SELF DRILLING TAPPING SCREWS TOP AND BOTTOM ICC ESR 1408 (DATED DEC. 2017)

WALL MOUNT BRACKET (WMB)

NOTES:

1. SEOR SHALL DESIGN WALL STUDS & BACKING
2. SEOR TO PROVIDE SUPPORTING STRUCTURE TO SUPPORT FORCES SHOWN IN ADDITION TO ALL OTHER LOADS
3. ATTACHMENT CAPACITY BASED ON MIN. 6" STUDS WITH 1 5/8" FLANGE
4. ATTACHMENT CAPACITY BASED ON 15 FT MAX STUD HEIGHT WITH LOAD APPLICATION AT 1/3 UPPER HEIGHT

WALL MOUNT BRACKET

CASE 1

STEEL STUDS SHALL CONFORM TO ASTM A653 MATERIAL
MINIMUM YIELD STRENGTH OF 33 KSI FOR 18 GA. AND LIGHTER
MINIMUM YIELD STRENGTH OF 50 KSI FOR 16 GA. & HEAVIER

Approval From Engineer of Record Required Prior To Installation

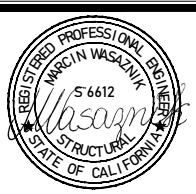

ISAT
A Division of Tomarco Contractor Specialties
International Seismic Application Technology
14848 Northam Street, La Mirada, CA 90638
877-999-4728 (Toll Free) 714-523-0845 (fax)
www.isatsb.com

Rev. 8
03/22/19

Page
D8.8

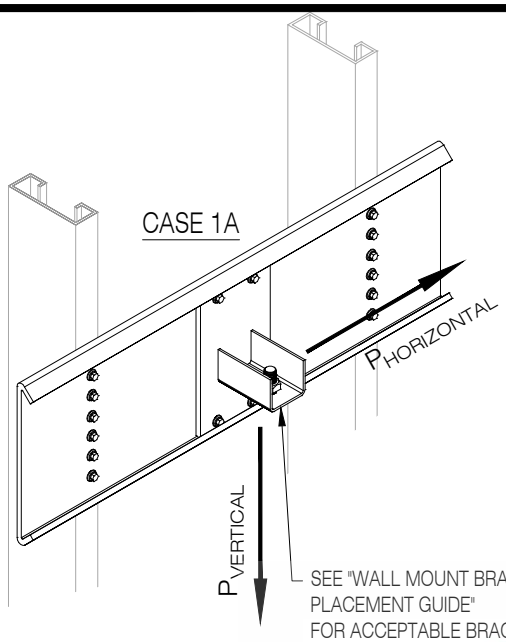

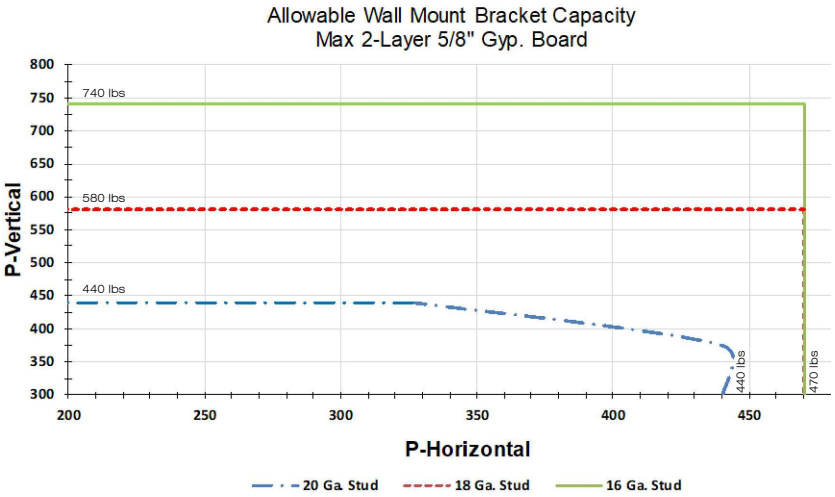

SEE "WALL MOUNT BRACKET PLACEMENT GUIDE" FOR ACCEPTABLE BRACKET (WMB) LOCATION ALONG WALL MOUNT PLATE (WMP)

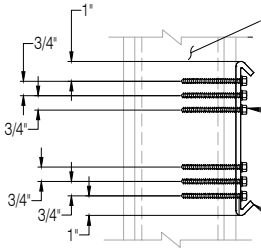

METAL STUD WITH GYPSUM WALL BOARD.

(6) 1/4" SELF DRILLING TAPPING SCREWS PER WALL STUD ICC ESR 1408 (DATED DEC. 2017)

ISAT WALL MOUNT PLATE (WMP) SEE PAGE F20 SPAN 2 STUDS MIN.

WALL MOUNT PLATE (WMP)

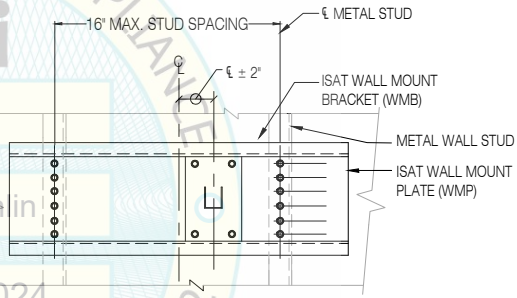

WALL MOUNT BRACKET PLACEMENT GUIDE

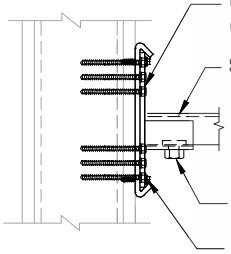

ISAT WALL MOUNT BRACKET (WMB) SEE PAGE F20

STRUT

1/2" BOLT W NUT OR /STRUT NUT
9/16" HOLE IN STRUT

(2) 1/4" SELF DRILLING TAPPING SCREWS TOP AND BOTTOM ICC ESR 1408 (DATED DEC. 2017)

WALL MOUNT BRACKET (WMB)

NOTES:

1. SEOR SHALL DESIGN WALL STUDS & BACKING
2. SEOR TO PROVIDE SUPPORTING STRUCTURE TO SUPPORT FORCES SHOWN IN ADDITION TO ALL OTHER LOADS
3. ATTACHMENT CAPACITY BASED ON MIN. 6" STUDS WITH 1 5/8" FLANGE
4. ATTACHMENT CAPACITY BASED ON 15 FT MAX STUD HEIGHT WITH LOAD APPLICATION AT 1/3 UPPER HEIGHT

WALL MOUNT BRACKET

CASE 1A
STEEL STUDS SHALL CONFORM TO ASTM A653 MATERIAL
MINIMUM YIELD STRENGTH OF 33 KSI FOR 18 GA. AND LIGHTER
MINIMUM YIELD STRENGTH OF 50 KSI FOR 16 GA. & HEAVIER

Approval From Engineer of Record Required Prior To Installation

REVIEWED FOR CODE COMPLIANCE
HCAi
OPM-0403
BY: William Staehlin
DATE: 01-26-2024
CALIFORNIA BUILDING CODE, 2022

REGISTERED PROFESSIONAL ENGINEER MARCIN WASAZNIK S 6612 STRUCTURAL STATE OF CALIFORNIA
01/26/2024

ISAT
A Division of Tomarco Contractor Specialties

International Seismic Application Technology
14848 Northam Street, La Mirada, CA 90638
877-999-4728 (Toll Free) 714-523-0845 (fax)
www.isatsb.com

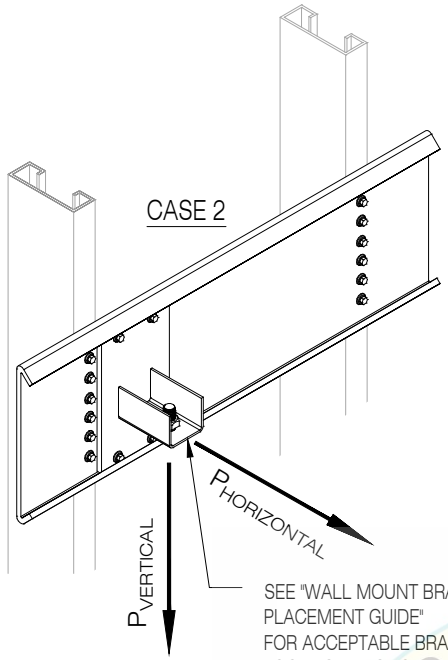

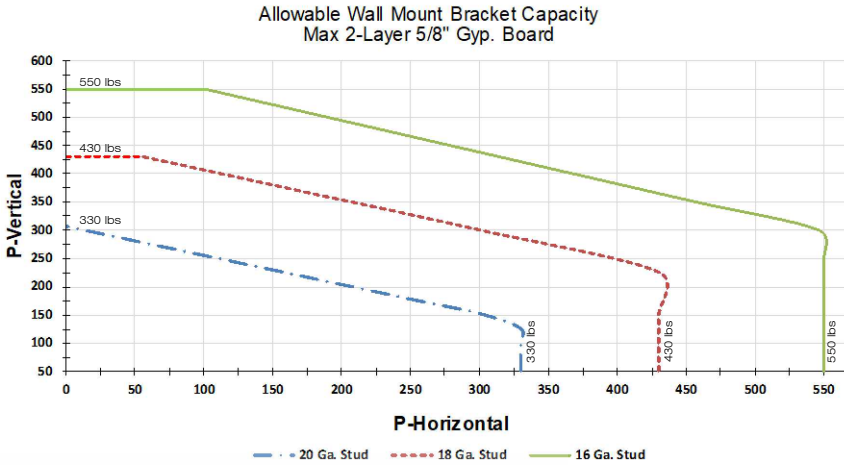

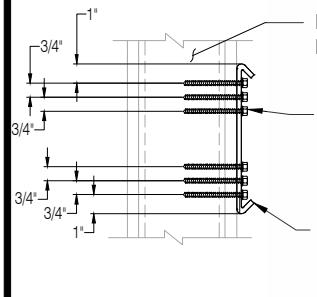

WALL MOUNT PLATE (WMP)

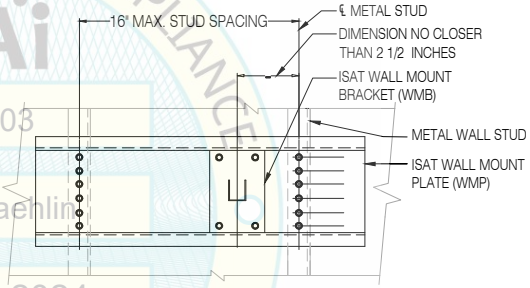

WALL MOUNT BRACKET PLACEMENT GUIDE

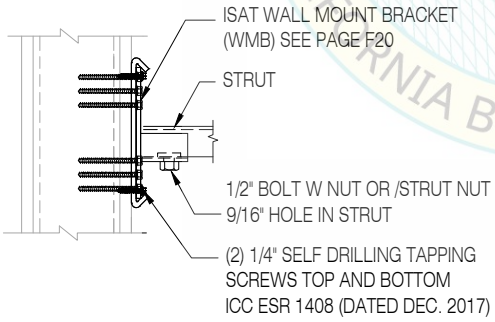

WALL MOUNT BRACKET (WMB)

NOTES:

1. SEOR SHALL DESIGN WALL STUDS & BACKING
2. SEOR TO PROVIDE SUPPORTING STRUCTURE TO SUPPORT FORCES SHOWN IN ADDITION TO ALL OTHER LOADS
3. ATTACHMENT CAPACITY BASED ON MIN. 6" STUDS WITH 1 5/8" FLANGE
4. ATTACHMENT CAPACITY BASED ON 15 FT MAX STUD HEIGHT WITH LOAD APPLICATION AT 1/3 UPPER HEIGHT

WALL MOUNT BRACKET

CASE 2

STEEL STUDS SHALL CONFORM TO ASTM A653 MATERIAL
MINIMUM YIELD STRENGTH OF 33 KSI FOR 18 GA. AND LIGHTER
MINIMUM YIELD STRENGTH OF 50 KSI FOR 16 GA. & HEAVIER

Approval From Engineer of Record Required Prior To Installation

REVIEWED FOR CODE COMPLIANCE
HCAi
OPM-0403
BY: William Staehlin
DATE: 01-26-2024
CALIFORNIA BUILDING CODE 2022

REGISTERED PROFESSIONAL ENGINEER MARCIN WASAZNIK S-6612 STRUCTURAL STATE OF CALIFORNIA

ISAT
A Division of Tomarco Contractor Specialties

International Seismic Application Technology
14848 Northam Street, La Mirada, CA 90638
877-999-4728 (Toll Free) 714-523-0845 (fax)
www.isatsb.com

Rev. 8
12/12/18

Page
D8.10

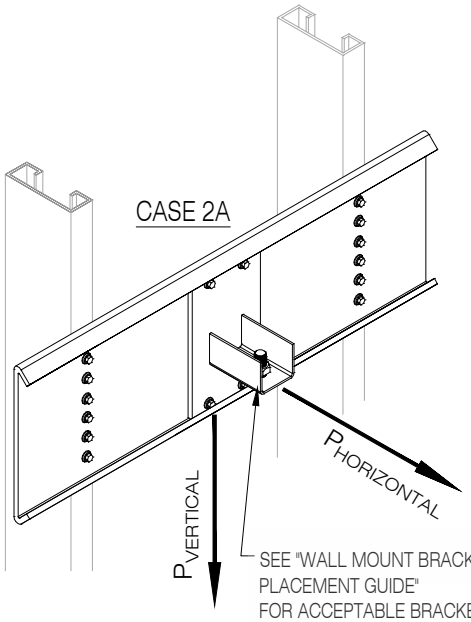

SEE "WALL MOUNT BRACKET PLACEMENT GUIDE" FOR ACCEPTABLE BRACKET (WMB) LOCATION ALONG WALL MOUNT PLATE (WMP)

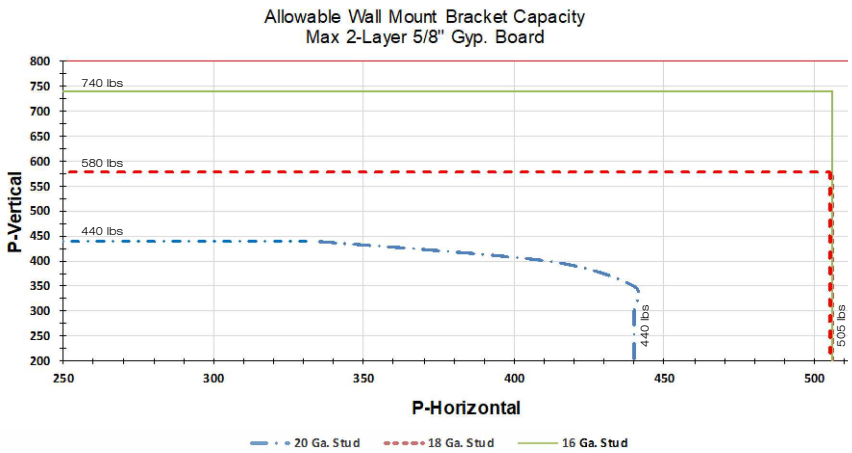

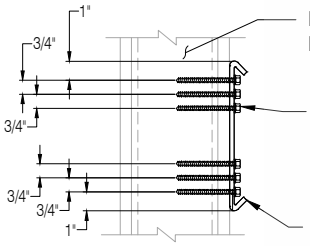

METAL STUD WITH GYPSUM WALL BOARD.

(6) 1/4" SELF DRILLING TAPPING SCREWS PER WALL STUD ICC ESR 1408 (DATED DEC. 2017)

ISAT WALL MOUNT PLATE (WMP) SEE PAGE F20 SPAN 2 STUDS MIN.

WALL MOUNT PLATE (WMP)

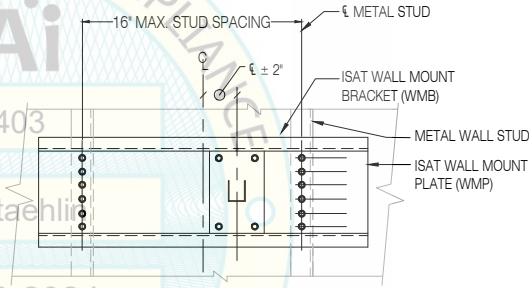

WALL MOUNT BRACKET PLACEMENT GUIDE

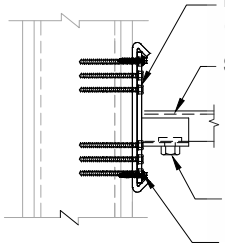

ISAT WALL MOUNT BRACKET (WMB) SEE PAGE F20

STRUT

1/2" BOLT W NUT OR /STRUT NUT 9/16" HOLE IN STRUT

(2) 1/4" SELF DRILLING TAPPING SCREWS TOP AND BOTTOM ICC ESR 1408 (DATED DEC. 2017)

WALL MOUNT BRACKET (WMB)

NOTES:

1. SEOR SHALL DESIGN WALL STUDS & BACKING
2. SEOR TO PROVIDE SUPPORTING STRUCTURE TO SUPPORT FORCES SHOWN IN ADDITION TO ALL OTHER LOADS
3. ATTACHMENT CAPACITY BASED ON MIN. 6" STUDS WITH 1 5/8" FLANGE
4. ATTACHMENT CAPACITY BASED ON 15 FT MAX STUD HEIGHT WITH LOAD APPLICATION AT 1/3 UPPER HEIGHT

WALL MOUNT BRACKET

CASE 2A

STEEL STUDS SHALL CONFORM TO ASTM A653 MATERIAL
MINIMUM YIELD STRENGTH OF 33 KSI FOR 18 GA. AND LIGHTER
MINIMUM YIELD STRENGTH OF 50 KSI FOR 16 GA. & HEAVIER

Approval From Engineer of Record Required Prior To Installation

REGISTERED PROFESSIONAL ENGINEER MARCIN WASAZNIK S-6612 STRUCTURAL STATE OF CALIFORNIA

ISAT
A Division of Tomarco Contractor Specialties
International Seismic Application Technology
14848 Northam Street, La Mirada, CA 90638
877-999-4728 (Toll Free) 714-523-0845 (fax)
www.isatsb.com

Rev. 8
12/12/18

Page
D8.11

REVIEWED FOR CODE COMPLIANCE HCAi OPM-0403 BY: William Staehlin DATE: 01-26-2024 CALIFORNIA BUILDING CODE 2022

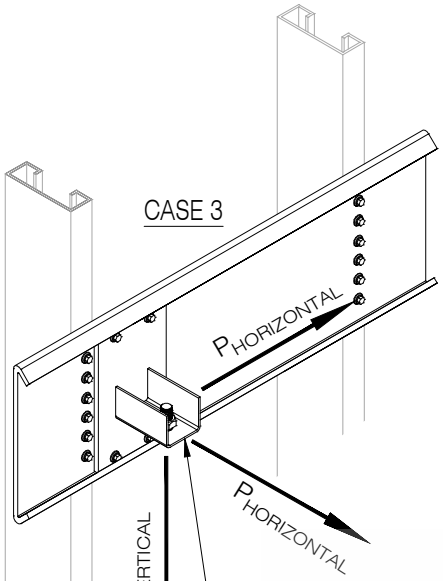

SEE "WALL MOUNT BRACKET PLACEMENT GUIDE" FOR ACCEPTABLE BRACKET (WMB) LOCATION ALONG WALL MOUNT PLATE (WMP)

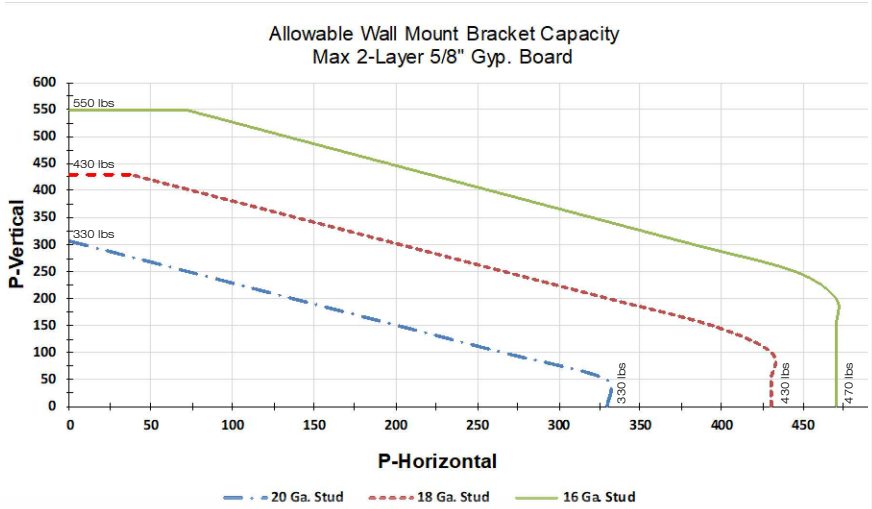

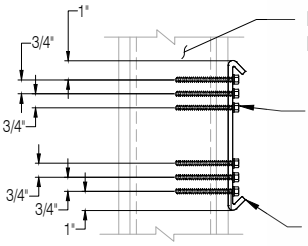

METAL STUD WITH GYPSUM WALL BOARD.

(6) 1/4" SELF DRILLING TAPPING SCREWS PER WALL STUD ICC ESR 1408 (DATED DEC. 2017)

ISAT WALL MOUNT PLATE (WMP) SEE PAGE F20 SPAN 2 STUDS MIN.

WALL MOUNT PLATE (WMP)

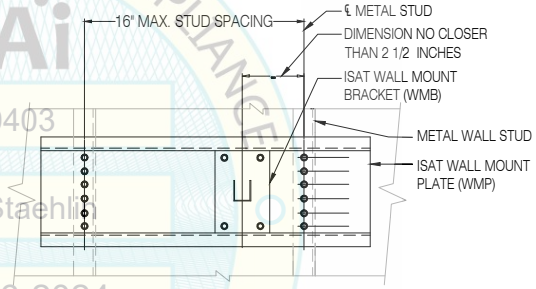

WALL MOUNT BRACKET PLACEMENT GUIDE

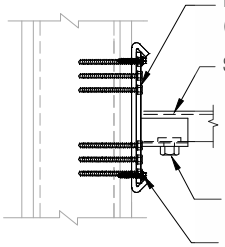

ISAT WALL MOUNT BRACKET (WMB) SEE PAGE F20

STRUT

1/2" BOLT W NUT OR /STRUT NUT 9/16" HOLE IN STRUT

(2) 1/4" SELF DRILLING TAPPING SCREWS TOP AND BOTTOM ICC ESR 1408 (DATED DEC. 2017)

WALL MOUNT BRACKET (WMB)

NOTES:

1. SEOR SHALL DESIGN WALL STUDS & BACKING
2. SEOR TO PROVIDE SUPPORTING STRUCTURE TO SUPPORT FORCES SHOWN IN ADDITION TO ALL OTHER LOADS
3. ATTACHMENT CAPACITY BASED ON MIN. 6" STUDS WITH 1 5/8" FLANGE
4. ATTACHMENT CAPACITY BASED ON 15 FT MAX STUD HEIGHT WITH LOAD APPLICATION AT 1/3 UPPER HEIGHT

WALL MOUNT BRACKET

CASE 3

STEEL STUDS SHALL CONFORM TO ASTM A653 MATERIAL
MINIMUM YIELD STRENGTH OF 33 KSI FOR 18 GA. AND LIGHTER
MINIMUM YIELD STRENGTH OF 50 KSI FOR 16 GA. & HEAVIER

Approval From Engineer of Record Required Prior To Installation

REVIEWED FOR CODE COMPLIANCE
HCAi
OPM-0403
BY: William Staehlin
DATE: 01-26-2024
CALIFORNIA BUILDING CODE 2022

REGISTERED PROFESSIONAL ENGINEER MARCIN WASAZNIK S-6612 STRUCTURAL STATE OF CALIFORNIA

ISAT
A Division of Tomarco Contractor Specialties

International Seismic Application Technology
14848 Northam Street, La Mirada, CA 90638
877-999-4728 (Toll Free) 714-523-0845 (fax)
www.isatsb.com

Rev. 8
12/12/18

Page
D8.12

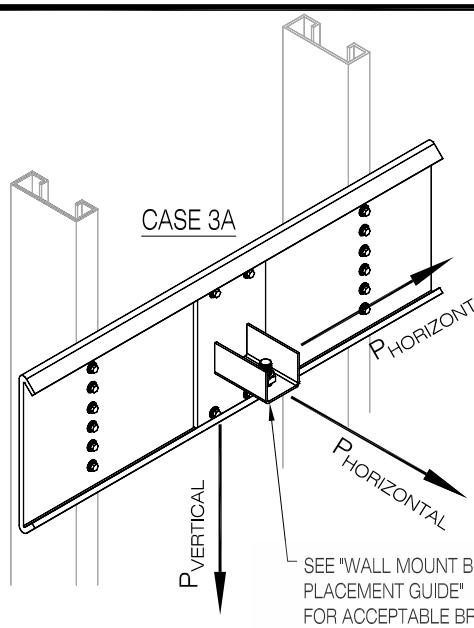

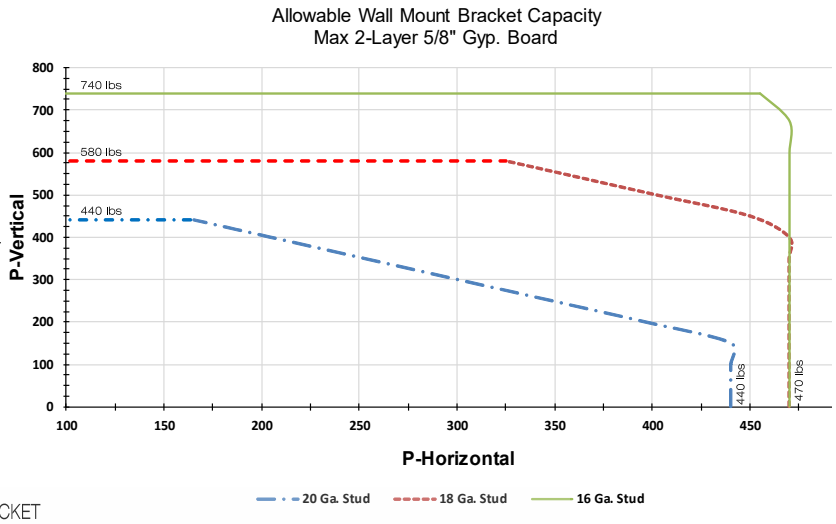

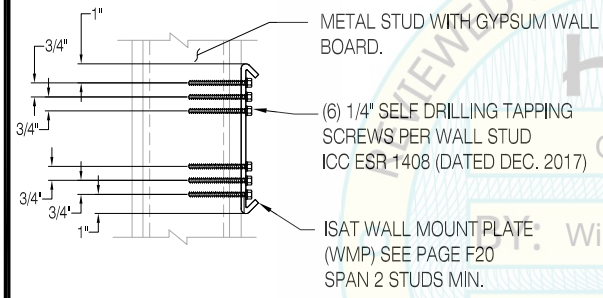

WALL MOUNT PLATE (WMP)

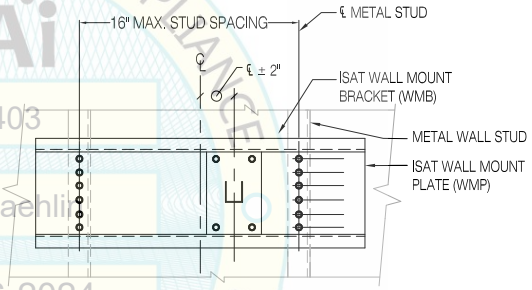

WALL MOUNT BRACKET PLACEMENT GUIDE

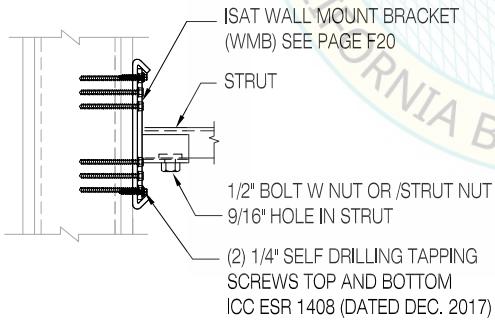

WALL MOUNT BRACKET (WMB)

NOTES:

1. SEOR SHALL DESIGN WALL STUDS & BACKING
2. SEOR TO PROVIDE SUPPORTING STRUCTURE TO SUPPORT FORCES SHOWN IN ADDITION TO ALL OTHER LOADS
3. ATTACHMENT CAPACITY BASED ON MIN. 6" STUDS WITH 1 5/8" FLANGE
4. ATTACHMENT CAPACITY BASED ON 15 FT MAX STUD HEIGHT WITH LOAD APPLICATION AT 1/3 UPPER HEIGHT

WALL MOUNT BRACKET

CASE 3A
STEEL STUDS SHALL CONFORM TO ASTM A653 MATERIAL
MINIMUM YIELD STRENGTH OF 33 KSI FOR 18 GA. AND LIGHTER
MINIMUM YIELD STRENGTH OF 50 KSI FOR 16 GA. & HEAVIER

Approval From Engineer of Record Required Prior To Installation

REGISTERED PROFESSIONAL ENGINEER
MARCIN WASAZNIK
S 6612
STRUCTURAL
STATE OF CALIFORNIA

ISAT
A Division of Tomarco Contractor Specialties
International Seismic Application Technology
14848 Northam Street, La Mirada, CA 90638
877-999-4728 (Toll Free) 714-523-0845 (fax)
www.isatsb.com

REVIEWED FOR CODE COMPLIANCE
HCAi
OPM-0403
BY: William Staehlin
DATE: 01-26-2024
CALIFORNIA BUILDING CODE 2022

INDEX - SEISMIC RESTRAINT BRACE ARM ASSEMBLIES

PAGE	DESCRIPTION
E0.1	NOMENCLATURE
	RIGID BRACE ARMS
	ROD CAPTURE TUNING FORK (RCTFR) ASSEMBLY
E1.1-0°	RCTF 0 Degrees from Horizontal
E1.1-30°	RCTF 30 Degrees from Horizontal
E1.1-45°	RCTF 45 Degrees from Horizontal
E1.1-60°	RCTF 60 Degrees from Horizontal
	ROD CAPTURE TUNING FORK (RCTFR) WITH TBA ASSEMBLY
E1.1T-0°	RCTF 0 Degrees from Horizontal
E1.1T-30°	RCTF 30 Degrees from Horizontal
E1.1T-45°	RCTF 45 Degrees from Horizontal
E1.1T-60°	RCTF 60 Degrees from Horizontal
	ROD CAPTURE HINGED WELDED (RCHW) ASSEMBLY (3/8" to 5/8" ROD DIA.)
E1.2-0°	RCHW 0 Degrees from Horizontal
E1.2-30°	RCHW 30 Degrees from Horizontal
E1.2-45°	RCHW 45 Degrees from Horizontal
E1.2-60°	RCHW 60 Degrees from Horizontal
	ROD CAPTURE HINGED WELDED (RCHW) ASSEMBLY (3/4" to 7/8" ROD DIA.)
E1.3-0°	RCHW 0 Degrees from Horizontal
E1.3-30°	RCHW 30 Degrees from Horizontal
E1.3-45°	RCHW 45 Degrees from Horizontal
E1.3-60°	RCHW 60 Degrees from Horizontal
	RIGID BRACE DETAILS
E2.1	RIGID BRACE ASSEMBLY DETAILS
E2.3	RIGID BRACE ARM ASSEMBLY - STF BRACKET
E2.4	ROD CAPTURE TUNING FORK RIGID ASSEMBLY (RCTFR)
	CABLE BRACE ARMS
	RCTFC, RCHW, WEDGY23, WEDGY45, CABLE CLIP, THRU-BOLTED, SWAGED
E3.1-0°	CABLE ASSEMBLY @ 0 Degrees from Horizontal
E3.1-30°	CABLE ASSEMBLY @ 30 Degrees from Horizontal
E3.1-45°	CABLE ASSEMBLY @ 45 Degrees from Horizontal
E3.1-60°	CABLE ASSEMBLY @ 60 Degrees from Horizontal
	CABLE BRACE DETAILS
E4.2	THRU-BOLT CABLE TIE ASSEMBLY DETAIL
E4.3	CABLE TIE ASSEMBLY DETAIL
E4.4	WEDGY CONNECTION DETAIL
E4.7	ROD CAPTURE TUNING FORK CABLE ASSEMBLY (RCTFC)

REVIEWED FOR CODE COMPLIANCE
HCAi
OPM-0403
BY: William Staehlin
DATE: 01-26-2024
CALIFORNIA BUILDING CODE, 2022

REGISTERED PROFESSIONAL ENGINEER
MARCIN WASAZNIK
S-6612
STRUCTURAL
STATE OF CALIFORNIA

ISAT
A Division of Tomarco Contractor Specialties

International Seismic Application Technology
14848 Northam Street, La Mirada, CA 90638
877-999-4728 (Toll Free) 714-523-0845 (fax)
www.isatsb.com

Rev. 8
06/28/23

Page
E0

ISAT RIGID AND CABLE BRACING ASSEMBLIES NOMENCLATURE

Ex: R38AAEM306

R = RIGID BRACING
38 = ROD (ATR) DIAMETER
AA = LOWER/UPPER BRACKET - ID FROM BRACKET TABLE
EM3 = BRACE TYPE - ID FROM BRACING TABLE
06 = BRACE LENGTH (ft)

BRACING TABLE

STRUT SIZE / EMT DIA	ID [1]
A1 PHD 1201 Perforated 13/16	A1P
A1 PHD 1201 Solid 13/16	A1S
B1 PHD 1001 Perforated 1-5/8	B1P
B1 PHD 1001 Solid 1-5/8	B1S
B2 PHD 1001A Perforated BB 1-5/8	B2P
B2 PHD 1001A Solid BB 1-5/8	B2S
EMT 1"	EM4
EMT 1-1/2"	EM6
EMT 2"	EM8
Telescoping EMT 1-1/4"	EM5T

NOTES:
1. See Pages E1s
2. Perforated = Punched or Slotted
3. EMT In Accordance With ANSI C80.3-2005

BRACKET TABLE

BRACKETS	ID
RCTF	A
RCHW	B
RCHWS	C
RCHWX	D
ABHW	E
ABHWS	F
ABHWX	G
FIG030	H
S360R	I
AB45	J
ABF	K
ABTF	O
HBK	P
TBA	Q

REVIEWED FOR CODE COMPLIANCE
HCAi
OPM-0403
BY: William Staehlin
DATE: 01-26-2024
CALIFORNIA BUILDING CODE 2022

Ex: C58BF05TT

C = CABLE (NON-RIGID) BRACING
58 = ROD (ATR) DIAMETER
BF = LOWER/UPPER BRACKET - ID FROM BRACKET TABLE
05 = CABLE DIAMETER
TT = LOWER/UPPER CABLE CONNECTOR FROM TABLE

CABLE FITTING/CONNECTOR TABLE

CABLE CONNECTION	ID
WEDGY	W
SWAGED	S
THRU-BOLTED	T
CABLE CLIP	C

CABLE DIA. TABLE

CABLE DIA.	ID
3/32	03
1/8	04
5/32	05
3/16	06
7/32	07
1/4	08
5/16	10

REGISTERED PROFESSIONAL ENGINEER MARCIN WASAZNIK S-6612 STRUCTURAL STATE OF CALIFORNIA

ISAT
A Division of Tomarco Contractor Specialties
International Seismic Application Technology
14848 Northam Street, La Mirada, CA 90638
877-999-4728 (Toll Free) 714-523-0845 (fax)
www.isatsb.com

Rev. 2
09/27/23

Page
E0.1

DIRECTORY - ISAT RIGID BRACE ASSEMBLIES [6]								
ISAT Brace Assembly [1]	Rod	ISAT Seismic Brackets @ 0 Degrees [4]				Brace Arm Member [2]		Assembly Design Value [3], P (lbs)
	Diameter (in)	Lower Bracket	Manual Page	Upper Bracket [5]	Manual Page	Arm ID	Max. Brace Arm Length (ft)	
R38AOEM406		RCTFR38-0	E2.4	ABTFR_	F2.2	EM4	06	**660**
R38AOEM609		RCTFR38-0	E2.4	ABTFR_	F2.2	EM6	09	**1,100**
R38AOEM812		RCTFR38-0	E2.4	ABTFR_	F2.2	EM8	12	**1,100**
R38AOA1S06		RCTFR38-0	E2.4	ABTFR_	F2.2	A1S	06	**650**
R38AOB1P12		RCTFR38-0	E2.4	ABTFR_	F2.2	B1P	12	**680**
R38AOB1P09	3/8-0	RCTFR38-0	E2.4	ABTFR_	F2.2	B1P	09	**910**
R38AOB1P06		RCTFR38-0	E2.4	ABTFR_	F2.2	B1P	06	**1,100**
R38AOB1S12		RCTFR38-0	E2.4	ABTFR_	F2.2	B1S	12	**780**
R38AOB1S09		RCTFR38-0	E2.4	ABTFR_	F2.2	B1S	09	**1,040**
R38AOB1S06		RCTFR38-0	E2.4	ABTFR_	F2.2	B1S	06	**1,100**
R38AOB2P12		RCTFR38-0	E2.4	ABTFR_	F2.2	B2P	12	**1,100**
R12AOEM406		RCTFR12-0	E2.4	ABTFR_	F2.2	EM4	06	**660**
R12AOEM609		RCTFR12-0	E2.4	ABTFR_	F2.2	EM6	09	**1,160**
R12AAEM606		RCTFR12-0	E2.4	RCTFR_	E2.4	EM6	06	**1,450**
R12AOEM812		RCTFR12-0	E2.4	ABTFR_	F2.2	EM8	12	**1,380**
R12AAEM809		RCTFR12-0	E2.4	RCTFR_	E2.4	EM8	09	**1,450**
R12AOA1S06		RCTFR12-0	E2.4	ABTFR_	F2.2	A1S	06	**650**
R12AOB1P12	1/2-0	RCTFR12-0	E2.4	ABTFR_	F2.2	B1P	12	**680**
R12AOB1P09		RCTFR12-0	E2.4	ABTFR_	F2.2	B1P	09	**910**
R12AOB1P06		RCTFR12-0	E2.4	ABTFR_	F2.2	B1P	06	**1,250**
R12AOB1S12		RCTFR12-0	E2.4	ABTFR_	F2.2	B1S	12	**780**
R12AOB1S09		RCTFR12-0	E2.4	ABTFR_	F2.2	B1S	09	**1,040**
R12AOB1S06		RCTFR12-0	E2.4	ABTFR_	F2.2	B1S	06	**1,420**
R12AOB2P12		RCTFR12-0	E2.4	ABTFR_	F2.2	B2P	12	**1,450**
R58AOEM406		RCTFR58-0	E2.4	ABTFR_	F2.2	EM4	06	**660**
R58AOEM609		RCTFR58-0	E2.4	ABTFR_	F2.2	EM6	09	**1,160**
R58AAEM606		RCTFR58-0	E2.4	RCTFR_	E2.4	EM6	06	**1,450**
R58AOEM812		RCTFR58-0	E2.4	ABTFR_	F2.2	EM8	12	**1,380**
R58AAEM809		RCTFR58-0	E2.4	RCTFR_	E2.4	EM8	09	**1,450**
R58AOA1S06		RCTFR58-0	E2.4	ABTFR_	F2.2	A1S	06	**650**
R58AOB1P12	5/8-0	RCTFR58-0	E2.4	ABTFR_	F2.2	B1P	12	**680**
R58AOB1P09		RCTFR58-0	E2.4	ABTFR_	F2.2	B1P	09	**910**
R58AOB1P06		RCTFR58-0	E2.4	ABTFR_	F2.2	B1P	06	**1,250**
R58AOB1S12		RCTFR58-0	E2.4	ABTFR_	F2.2	B1S	12	**780**
R58AOB1S09		RCTFR58-0	E2.4	ABTFR_	F2.2	B1S	09	**1,040**
R58AOB1S06		RCTFR58-0	E2.4	ABTFR_	F2.2	B1S	06	**1,420**
R58AOB2P12		RCTFR58-0	E2.4	ABTFR_	F2.2	B2P	12	**1,450**

1. See Page E0.1 for Nomenclature.
2. For Different Bracing Arm Length contact ISAT representative.
3. Nominal 0 +/- 5 Degrees Brace Angle Measured From Horizontal. Brace Force (P) Along Brace Arm.
4. Use of Any Non ISAT Bracket Voids Engineering.
5. Any size Upper Bracket within the same bracket family may be used. Refer to specified manual page for details.
6. The table above represents typical assemblies. Consult ISAT Engineering if alternate options are required.
7. See Page E2.3 for Rigid Brace Arm Assembly details.

REVIEWED FOR CODE COMPLIANCE
OPM-0403
By William Staehlin
01-24-2024
CALIFORNIA BUILDING CODE 2022

REGISTERED PROFESSIONAL ENGINEER
MARCIN WASAZNIK
S 6612
STRUCTURAL
STATE OF CALIFORNIA

ISAT
A Division of Tomarco Contractor Specialties

International Seismic Application Technology
14848 Northam Street, La Mirada, CA 90638
877-999-4728 (Toll Free) 714-523-0845 (fax)
www.isatsb.com

Rev. 19
12/13/2023
PAGE:
E1.1-0°

DIRECTORY - ISAT RIGID BRACE ASSEMBLIES [6]								
ISAT Brace Assembly [1]	Rod	ISAT Seismic Brackets @ 30 Degrees [4]				Brace Arm Member [2]		Assembly Design Value [3], P (lbs)
	Diameter (in)	Lower Bracket	Manual Page	Upper Bracket [5]	Manual Page	Arm ID	Max. Brace Arm Length (ft)	
R38AOEM406	3/8-30	RCTFR38-30	E2.4	ABTFR_	F2.2	EM4	06	**660**
R38AOEM609		RCTFR38-30	E2.4	ABTFR_	F2.2	EM6	09	**1,160**
R38AOEM606		RCTFR38-30	E2.4	ABTFR_	F2.2	EM6	06	**1,320**
R38AOEM812		RCTFR38-30	E2.4	ABTFR_	F2.2	EM8	12	**1,320**
R38AOA1S06		RCTFR38-30	E2.4	ABTFR_	F2.2	A1S	06	**650**
R38AOB1P12		RCTFR38-30	E2.4	ABTFR_	F2.2	B1P	12	**680**
R38AOB1P09		RCTFR38-30	E2.4	ABTFR_	F2.2	B1P	09	**910**
R38AOB1P06		RCTFR38-30	E2.4	ABTFR_	F2.2	B1P	06	**1,250**
R38AOB1S12		RCTFR38-30	E2.4	ABTFR_	F2.2	B1S	12	**780**
R38AOB1S09		RCTFR38-30	E2.4	ABTFR_	F2.2	B1S	09	**1,040**
R38AOB1S06		RCTFR38-30	E2.4	ABTFR_	F2.2	B1S	06	**1,320**
R38AOB2P12		RCTFR38-30	E2.4	ABTFR_	F2.2	B2P	12	**1,320**
R12AOEM406	1/2-30	RCTFR12-30	E2.4	ABTFR_	F2.2	EM4	06	**660**
R12AOEM609		RCTFR12-30	E2.4	ABTFR_	F2.2	EM6	09	**1,160**
R12AAEM606		RCTFR12-30	E2.4	RCTFR_	E2.4	EM6	06	**1,470**
R12AOEM812		RCTFR12-30	E2.4	ABTFR_	F2.2	EM8	12	**1,380**
R12AAEM809		RCTFR12-30	E2.4	RCTFR_	E2.4	EM8	09	**1,470**
R12AOA1S06		RCTFR12-30	E2.4	ABTFR_	F2.2	A1S	06	**650**
R12AOB1P12		RCTFR12-30	E2.4	ABTFR_	F2.2	B1P	12	**680**
R12AOB1P09		RCTFR12-30	E2.4	ABTFR_	F2.2	B1P	09	**910**
R12AOB1P06		RCTFR12-30	E2.4	ABTFR_	F2.2	B1P	06	**1,250**
R12AOB1S12		RCTFR12-30	E2.4	ABTFR_	F2.2	B1S	12	**780**
R12AOB1S09		RCTFR12-30	E2.4	ABTFR_	F2.2	B1S	09	**1,040**
R12AOB1S06		RCTFR12-30	E2.4	ABTFR_	F2.2	B1S	06	**1,420**
R12AOB2P12		RCTFR12-30	E2.4	ABTFR_	F2.2	B2P	12	**1,470**
R58AOEM406	5/8-30	RCTFR58-30	E2.4	ABTFR_	F2.2	EM4	06	**660**
R58AOEM609		RCTFR58-30	E2.4	ABTFR_	F2.2	EM6	09	**1,160**
R58AAEM606		RCTFR58-30	E2.4	RCTFR_	E2.4	EM6	06	**1,470**
R58AOEM812		RCTFR58-30	E2.4	ABTFR_	F2.2	EM8	12	**1,380**
R58AAEM809		RCTFR58-30	E2.4	RCTFR_	E2.4	EM8	09	**1,470**
R58AOA1S06		RCTFR58-30	E2.4	ABTFR_	F2.2	A1S	06	**650**
R58AOB1P12		RCTFR58-30	E2.4	ABTFR_	F2.2	B1P	12	**680**
R58AOB1P09		RCTFR58-30	E2.4	ABTFR_	F2.2	B1P	09	**910**
R58AOB1P06		RCTFR58-30	E2.4	ABTFR_	F2.2	B1P	06	**1,250**
R58AOB1S12		RCTFR58-30	E2.4	ABTFR_	F2.2	B1S	12	**780**
R58AOB1S09		RCTFR58-30	E2.4	ABTFR_	F2.2	B1S	09	**1,040**
R58AOB1S06		RCTFR58-30	E2.4	ABTFR_	F2.2	B1S	06	**1,420**
R58AOB2P12		RCTFR58-30	E2.4	ABTFR_	F2.2	B2P	12	**1,470**

1. See Page E0.1 for Nomenclature.
2. For Different Bracing Arm Length contact ISAT representative.
3. Nominal 30 +/- 5 Degrees Brace Angle Measured From Horizontal. Brace Force (P) Along Brace Arm.
4. Use of Any Non ISAT Bracket Voids Engineering.
5. Any size Upper Bracket within the same bracket family may be used. Refer to specified manual page for details.
6. The table above represents typical assemblies. Consult ISAT Engineering if alternate options are required.
7. See Page E2.3 for Rigid Brace Arm Assembly details.

REVIEWED FOR CODE COMPLIANCE
OPM-0403
Reviewed by William Staehlin 01-26-2024
CALIFORNIA REGULATORY CODE

REGISTERED PROFESSIONAL ENGINEER
MARCIN WASAZNIK
S 6612
STRUCTURAL
STATE OF CALIFORNIA

ISAT
A Division of Tomarco Contractor Specialties

International Seismic Application Technology
14848 Northam Street, La Mirada, CA 90638
877-999-4728 (Toll Free) 714-523-0845 (fax)
www.isatsb.com

Rev. 19
12/13/2023
PAGE:
E1.1-30°

DIRECTORY - ISAT RIGID BRACE ASSEMBLIES [6]								
ISAT Brace Assembly [1]	Rod	ISAT Seismic Brackets @ 45 Degrees [4]				Brace Arm Member [2]		Assembly Design Value [3], P (lbs)
	Diameter (in)	Lower Bracket	Manual Page	Upper Bracket [5]	Manual Page	Arm ID	Max. Brace Arm Length (ft)	
R38AOEM406	3/8	RCTFR38	E2.4	ABTFR_	F2.2	EM4	06	**660**
R38AOEM609		RCTFR38	E2.4	ABTFR_	F2.2	EM6	09	**1,160**
R38AOEM606		RCTFR38	E2.4	ABTFR_	F2.2	EM6	06	**1,360**
R38AOEM812		RCTFR38	E2.4	ABTFR_	F2.2	EM8	12	**1,360**
R38AOA1S06		RCTFR38	E2.4	ABTFR_	F2.2	A1S	06	**650**
R38AOB1P12		RCTFR38	E2.4	ABTFR_	F2.2	B1P	12	**680**
R38AOB1P09		RCTFR38	E2.4	ABTFR_	F2.2	B1P	09	**910**
R38AOB1P06		RCTFR38	E2.4	ABTFR_	F2.2	B1P	06	**1,250**
R38AOB1S12		RCTFR38	E2.4	ABTFR_	F2.2	B1S	12	**780**
R38AOB1S09		RCTFR38	E2.4	ABTFR_	F2.2	B1S	09	**1,040**
R38AOB1S06		RCTFR38	E2.4	ABTFR_	F2.2	B1S	06	**1,360**
R38AOB2P12		RCTFR38	E2.4	ABTFR_	F2.2	B2P	12	**1,360**
R12AOEM406	1/2	RCTFR12	E2.4	ABTFR_	F2.2	EM4	06	**660**
R12AOEM609		RCTFR12	E2.4	ABTFR_	F2.2	EM6	09	**1,160**
R12AAEM606		RCTFR12	E2.4	RCTFR_	E2.4	EM6	06	**2,050**
R12AOEM812		RCTFR12	E2.4	ABTFR_	F2.2	EM8	12	**1,380**
R12AAEM809		RCTFR12	E2.4	RCTFR_	E2.4	EM8	09	**2,050**
R12AOA1S06		RCTFR12	E2.4	ABTFR_	F2.2	A1S	06	**650**
R12AOB1P12		RCTFR12	E2.4	ABTFR_	F2.2	B1P	12	**680**
R12AOB1P09		RCTFR12	E2.4	ABTFR_	F2.2	B1P	09	**910**
R12AOB1P06		RCTFR12	E2.4	ABTFR_	F2.2	B1P	06	**1,250**
R12AOB1S12		RCTFR12	E2.4	ABTFR_	F2.2	B1S	12	**780**
R12AOB1S09		RCTFR12	E2.4	ABTFR_	F2.2	B1S	09	**1,040**
R12AOB1S06		RCTFR12	E2.4	ABTFR_	F2.2	B1S	06	**1,420**
R12AOB2P12		RCTFR12	E2.4	ABTFR_	F2.2	B2P	12	**1,660**
R12AAB2P09		RCTFR12	E2.4	RCTFR_	E2.4	B2P	09	**2,050**
R58AOEM406	5/8	RCTFR58	E2.4	ABTFR_	F2.2	EM4	06	**660**
R58AOEM609		RCTFR58	E2.4	ABTFR_	F2.2	EM6	09	**1,160**
R58AAEM606		RCTFR58	E2.4	RCTFR_	E2.4	EM6	06	**2,050**
R58AOEM812		RCTFR58	E2.4	ABTFR_	F2.2	EM8	12	**1,380**
R58AAEM809		RCTFR58	E2.4	RCTFR_	E2.4	EM8	09	**2,050**
R58AOA1S06		RCTFR58	E2.4	ABTFR_	F2.2	A1S	06	**650**
R58AOB1P12		RCTFR58	E2.4	ABTFR_	F2.2	B1P	12	**680**
R58AOB1P09		RCTFR58	E2.4	ABTFR_	F2.2	B1P	09	**910**
R58AOB1P06		RCTFR58	E2.4	ABTFR_	F2.2	B1P	06	**1,250**
R58AOB1S12		RCTFR58	E2.4	ABTFR_	F2.2	B1S	12	**780**
R58AOB1S09		RCTFR58	E2.4	ABTFR_	F2.2	B1S	09	**1,040**
R58AOB1S06		RCTFR58	E2.4	ABTFR_	F2.2	B1S	06	**1,420**
R58AOB2P12		RCTFR58	E2.4	ABTFR_	F2.2	B2P	12	**1,660**
R58AAB2P09		RCTFR58	E2.4	RCTFR_	E2.4	B2P	09	**2,050**

1. See Page E0.1 for Nomenclature.
2. For Different Bracing Arm Length contact ISAT representative.
3. Nominal 45 +/- 5 Degrees Brace Angle Measured From Horizontal. Brace Force (P) Along Brace Arm.
4. Use of Any Non ISAT Bracket Voids Engineering.
5. Any size Upper Bracket within the same bracket family may be used. Refer to specified manual page for details.
6. The table above represents typical assemblies. Consult ISAT Engineering if alternate options are required.
7. See Page E2.3 for Rigid Brace Arm Assembly details.

REVIEWED FOR CODE COMPLIANCE
OPM-0403
By William Staehlin
01-26-2024
CALIFORNIA BUILDING CODE 2022

REGISTERED PROFESSIONAL ENGINEER
MARCIN WASAZNIK
S 6612
STRUCTURAL
STATE OF CALIFORNIA

ISAT
A Division of Tomarco Contractor Specialties

International Seismic Application Technology
14848 Northam Street, La Mirada, CA 90638
877-999-4728 (Toll Free) 714-523-0845 (fax)
www.isatsb.com

Rev. 19
12/13/2023
PAGE:
E1.1-45°

DIRECTORY - ISAT RIGID BRACE ASSEMBLIES [6]								
ISAT Brace Assembly [1]	Rod	ISAT Seismic Brackets @ 60 Degrees [4]				Brace Arm Member [2]		Assembly Design Value [3], P (lbs)
	Diameter (in)	Lower Bracket	Manual Page	Upper Bracket [5]	Manual Page	Arm ID	Max. Brace Arm Length (ft)	
R38AOEM406	3/8-60	RCTFR38-60	E2.4	ABTFR_	F2.2	EM4	06	**660**
R38AOEM609		RCTFR38-60	E2.4	ABTFR_	F2.2	EM6	09	**1,160**
R38AOEM606		RCTFR38-60	E2.4	ABTFR_	F2.2	EM6	06	**1,510**
R38AOEM812		RCTFR38-60	E2.4	ABTFR_	F2.2	EM8	12	**1,380**
R38AOEM809		RCTFR38-60	E2.4	ABTFR_	F2.2	EM8	09	**1,510**
R38AOA1S06		RCTFR38-60	E2.4	ABTFR_	F2.2	A1S	06	**650**
R38AOB1P12		RCTFR38-60	E2.4	ABTFR_	F2.2	B1P	12	**680**
R38AOB1P09		RCTFR38-60	E2.4	ABTFR_	F2.2	B1P	09	**910**
R38AOB1P06		RCTFR38-60	E2.4	ABTFR_	F2.2	B1P	06	**1,250**
R38AOB1S12		RCTFR38-60	E2.4	ABTFR_	F2.2	B1S	12	**780**
R38AOB1S09		RCTFR38-60	E2.4	ABTFR_	F2.2	B1S	09	**1,040**
R38AOB1S06		RCTFR38-60	E2.4	ABTFR_	F2.2	B1S	06	**1,420**
R38AOB2P12		RCTFR38-60	E2.4	ABTFR_	F2.2	B2P	12	**1,510**
R12AOEM406	1/2-60	RCTFR12-60	E2.4	ABTFR_	F2.2	EM4	06	**660**
R12AOEM609		RCTFR12-60	E2.4	ABTFR_	F2.2	EM6	09	**1,160**
R12AAEM606		RCTFR12-60	E2.4	RCTFR_	E2.4	EM6	06	**2,060**
R12AOEM812		RCTFR12-60	E2.4	ABTFR_	F2.2	EM8	12	**1,380**
R12AAEM809		RCTFR12-60	E2.4	RCTFR_	E2.4	EM8	09	**2,100**
R12AOA1S06		RCTFR12-60	E2.4	ABTFR_	F2.2	A1S	06	**650**
R12AOB1P12		RCTFR12-60	E2.4	ABTFR_	F2.2	B1P	12	**680**
R12AOB1P09		RCTFR12-60	E2.4	ABTFR_	F2.2	B1P	09	**910**
R12AOB1P06		RCTFR12-60	E2.4	ABTFR_	F2.2	B1P	06	**1,250**
R12AOB1S12		RCTFR12-60	E2.4	ABTFR_	F2.2	B1S	12	**780**
R12AOB1S09		RCTFR12-60	E2.4	ABTFR_	F2.2	B1S	09	**1,040**
R12AOB1S06		RCTFR12-60	E2.4	ABTFR_	F2.2	B1S	06	**1,420**
R12AOB2P12		RCTFR12-60	E2.4	ABTFR_	F2.2	B2P	12	**1,660**
R12AAB2P09		RCTFR12-60	E2.4	RCTFR_	E2.4	B2P	09	**2,390**
R58AOEM406	5/8-60	RCTFR58-60	E2.4	ABTFR_	F2.2	EM4	06	**660**
R58AOEM609		RCTFR58-60	E2.4	ABTFR_	F2.2	EM6	09	**1,160**
R58AAEM606		RCTFR58-60	E2.4	RCTFR_	E2.4	EM6	06	**2,060**
R58AOEM812		RCTFR58-60	E2.4	ABTFR_	F2.2	EM8	12	**1,380**
R58AAEM809		RCTFR58-60	E2.4	RCTFR_	E2.4	EM8	09	**2,100**
R58AOA1S06		RCTFR58-60	E2.4	ABTFR_	F2.2	A1S	06	**650**
R58AOB1P12		RCTFR58-60	E2.4	ABTFR_	F2.2	B1P	12	**680**
R58AOB1P09		RCTFR58-60	E2.4	ABTFR_	F2.2	B1P	09	**910**
R58AOB1P06		RCTFR58-60	E2.4	ABTFR_	F2.2	B1P	06	**1,250**
R58AOB1S12		RCTFR58-60	E2.4	ABTFR_	F2.2	B1S	12	**780**
R58AOB1S09		RCTFR58-60	E2.4	ABTFR_	F2.2	B1S	09	**1,040**
R58AOB1S06		RCTFR58-60	E2.4	ABTFR_	F2.2	B1S	06	**1,420**
R58AOB2P12		RCTFR58-60	E2.4	ABTFR_	F2.2	B2P	12	**1,660**
R58AAB2P09		RCTFR58-60	E2.4	RCTFR_	E2.4	B2P	09	**2,390**

1. See Page E0.1 for Nomenclature.
2. For Different Bracing Arm Length contact ISAT representative.
3. Nominal 60 +/- 5 Degrees Brace Angle Measured From Horizontal. Brace Force (P) Along Brace Arm.
4. Use of Any Non ISAT Bracket Voids Engineering.
5. Any size Upper Bracket within the same bracket family may be used. Refer to specified manual page for details.
6. The table above represents typical assemblies. Consult ISAT Engineering if alternate options are required.
7. See Page E2.3 for Rigid Brace Arm Assembly details.

REVIEWED FOR CODE COMPLIANCE
OPM-0403
Review: William Staehlin 01-26-2024
CALIFORNIA BUILDING CODE 2022

REGISTERED PROFESSIONAL ENGINEER
MARCIN WASAZNIK
S 6612
STRUCTURAL
STATE OF CALIFORNIA

ISAT
A Division of Tomarco Contractor Specialties

International Seismic Application Technology
14848 Northam Street, La Mirada, CA 90638
877-999-4728 (Toll Free) 714-523-0845 (fax)
www.isatsb.com

Rev. 19
12/13/2023
PAGE:
E1.1-60°

DIRECTORY - ISAT RIGID BRACE ASSEMBLIES [6]								
ISAT Brace Assembly [1]	Rod	ISAT Seismic Brackets @ 0 Degrees [4]				Brace Arm Member [2]		Assembly Design Value [3], P (lbs)
	Diameter (in)	Lower Bracket	Manual Page	Upper Bracket [5]	Manual Page	Arm ID	Max. Brace Arm Length (ft)	
R38AAEM5T07	3/8-0	RCTFR38-0	E2.4	RCTFR_	E2.4	EM5T	07	**1,100**
R38AAEM5T08		RCTFR38-0	E2.4	RCTFR_	E2.4	EM5T	08	**1,000**
R38AAEM5T09		RCTFR38-0	E2.4	RCTFR_	E2.4	EM5T	09	**790**
R38AAEM5T10		RCTFR38-0	E2.4	RCTFR_	E2.4	EM5T	10	**660**
R12AAEM5T07	1/2-0	RCTFR12-0	E2.4	RCTFR_	E2.4	EM5T	07	**1,110**
R12AAEM5T08		RCTFR12-0	E2.4	RCTFR_	E2.4	EM5T	08	**1,000**
R12AAEM5T09		RCTFR12-0	E2.4	RCTFR_	E2.4	EM5T	09	**790**
R12AAEM5T10		RCTFR12-0	E2.4	RCTFR_	E2.4	EM5T	10	**660**
R58AAEM5T07	5/8-0	RCTFR58-0	E2.4	RCTFR_	E2.4	EM5T	07	**1,110**
R58AAEM5T08		RCTFR58-0	E2.4	RCTFR_	E2.4	EM5T	08	**1,000**
R58AAEM5T09		RCTFR58-0	E2.4	RCTFR_	E2.4	EM5T	09	**790**
R58AAEM5T10		RCTFR58-0	E2.4	RCTFR_	E2.4	EM5T	10	**660**

1. See Page E0.1 for Nomenclature.
2. For Different Bracing Arm Length contact ISAT representative.
3. Nominal 0 +/- 5 Degrees Brace Angle Measured From Horizontal. Brace Force (P) Along Brace Arm.
4. Use of Any Non ISAT Bracket Voids Engineering.
5. Any size Upper Bracket within the same bracket family may be used. Refer to specified manual page for details.
6. The table above represents typical assemblies. Consult ISAT Engineering if alternate options are required.
7. See Page E2.3 for Rigid Brace Arm Assembly details.

REVIEWED FOR CODE COMPLIANCE
HCAI
OPM-0403
BY: William Staehlin
DATE: 01-26-2024
CALIFORNIA BUILDING CODE, 2022

REGISTERED PROFESSIONAL ENGINEER
MARCIN WASAZNIK
S 6612
STRUCTURAL
STATE OF CALIFORNIA

ISAT
A Division of Tomarco Contractor Specialties

International Seismic Application Technology
14848 Northam Street, La Mirada, CA 90638
877-999-4728 (Toll Free) 714-523-0845 (fax)
www.isatsb.com

DIRECTORY - ISAT RIGID BRACE ASSEMBLIES [6]								
ISAT Brace Assembly [1]	Rod	ISAT Seismic Brackets @ 30 Degrees [4]				Brace Arm Member [2]		Assembly Design Value [3], P (lbs)
	Diameter (in)	Lower Bracket	Manual Page	Upper Bracket [5]	Manual Page	Arm ID	Max. Brace Arm Length (ft)	
R38AAEM5T07	3/8-30	RCTFR38-30	E2.4	RCTFR_	E2.4	EM5T	07	**1,110**
R38AAEM5T08		RCTFR38-30	E2.4	RCTFR_	E2.4	EM5T	08	**1,000**
R38AAEM5T09		RCTFR38-30	E2.4	RCTFR_	E2.4	EM5T	09	**790**
R38AAEM5T10		RCTFR38-30	E2.4	RCTFR_	E2.4	EM5T	10	**660**
R12AAEM5T07	1/2-30	RCTFR12-30	E2.4	RCTFR_	E2.4	EM5T	07	**1,110**
R12AAEM5T08		RCTFR12-30	E2.4	RCTFR_	E2.4	EM5T	08	**1,000**
R12AAEM5T09		RCTFR12-30	E2.4	RCTFR_	E2.4	EM5T	09	**790**
R12AAEM5T10		RCTFR12-30	E2.4	RCTFR_	E2.4	EM5T	10	**660**
R58AAEM5T07	5/8-30	RCTFR58-30	E2.4	RCTFR_	E2.4	EM5T	07	**1,110**
R58AAEM5T08		RCTFR58-30	E2.4	RCTFR_	E2.4	EM5T	08	**1,000**
R58AAEM5T09		RCTFR58-30	E2.4	RCTFR_	E2.4	EM5T	09	**790**
R58AAEM5T10		RCTFR58-30	E2.4	RCTFR_	E2.4	EM5T	10	**660**

1. See Page E0.1 for Nomenclature.
2. For Different Bracing Arm Length contact ISAT representative.
3. Nominal 30 +/- 5 Degrees Brace Angle Measured From Horizontal. Brace Force (P) Along Brace Arm.
4. Use of Any Non ISAT Bracket Voids Engineering.
5. Any size Upper Bracket within the same bracket family may be used. Refer to specified manual page for details.
6. The table above represents typical assemblies. Consult ISAT Engineering if alternate options are required.
7. See Page E2.3 for Rigid Brace Arm Assembly details.

REVIEWED FOR CODE COMPLIANCE
HCAI
OPM-0403
BY: William Staehlin
DATE: 01-26-2024
CALIFORNIA BUILDING CODE, 2022

REGISTERED PROFESSIONAL ENGINEER
MARCIN WASAZNIK
S 6612
STRUCTURAL
STATE OF CALIFORNIA

ISAT
A Division of Tomarco Contractor Specialties

International Seismic Application Technology
14848 Northam Street, La Mirada, CA 90638
877-999-4728 (Toll Free) 714-523-0845 (fax)
www.isatsb.com

DIRECTORY - ISAT RIGID BRACE ASSEMBLIES [6]								
ISAT Brace Assembly [1]	Rod	ISAT Seismic Brackets @ 45 Degrees [4]				Brace Arm Member [2]		Assembly Design Value [3], P (lbs)
	Diameter (in)	Lower Bracket	Manual Page	Upper Bracket [5]	Manual Page	Arm ID	Max. Brace Arm Length (ft)	
R38AAEM5T07	3/8	RCTFR38	E2.4	RCTFR_	E2.4	EM5T	07	**1,110**
R38AAEM5T08		RCTFR38	E2.4	RCTFR_	E2.4	EM5T	08	**1,000**
R38AAEM5T09		RCTFR38	E2.4	RCTFR_	E2.4	EM5T	09	**790**
R38AAEM5T10		RCTFR38	E2.4	RCTFR_	E2.4	EM5T	10	**660**
R12AAEM5T07	1/2	RCTFR12	E2.4	RCTFR_	E2.4	EM5T	07	**1,110**
R12AAEM5T08		RCTFR12	E2.4	RCTFR_	E2.4	EM5T	08	**1,000**
R12AAEM5T09		RCTFR12	E2.4	RCTFR_	E2.4	EM5T	09	**790**
R12AAEM5T10		RCTFR12	E2.4	RCTFR_	E2.4	EM5T	10	**660**
R58AAEM5T07	5/8	RCTFR58	E2.4	RCTFR_	E2.4	EM5T	07	**1,110**
R58AAEM5T08		RCTFR58	E2.4	RCTFR_	E2.4	EM5T	08	**1,000**
R58AAEM5T09		RCTFR58	E2.4	RCTFR_	E2.4	EM5T	09	**790**
R58AAEM5T10		RCTFR58	E2.4	RCTFR_	E2.4	EM5T	10	**660**

1. See Page E0.1 for Nomenclature.
2. For Different Bracing Arm Length contact ISAT representative.
3. Nominal 45 +/- 5 Degrees Brace Angle Measured From Horizontal. Brace Force (P) Along Brace Arm.
4. Use of Any Non ISAT Bracket Voids Engineering.
5. Any size Upper Bracket within the same bracket family may be used. Refer to specified manual page for details.
6. The table above represents typical assemblies. Consult ISAT Engineering if alternate options are required.
7. See Page E2.3 for Rigid Brace Arm Assembly details.

REVIEWED FOR CODE COMPLIANCE
RCAC
OPM-0403
BY: William Staehlin
DATE: 01-26-2024
CALIFORNIA BUILDING CODE, 2022

REGISTERED PROFESSIONAL ENGINEER
MARCIN WASAZNIK
S 6612
STRUCTURAL
STATE OF CALIFORNIA

ISAT
A Division of Tomarco Contractor Specialties

International Seismic Application Technology
14848 Northam Street, La Mirada, CA 90638
877-999-4728 (Toll Free) 714-523-0845 (fax)
www.isatsb.com

DIRECTORY - ISAT RIGID BRACE ASSEMBLIES [6]								
ISAT Brace Assembly [1]	Rod	ISAT Seismic Brackets @ 60 Degrees [4]				Brace Arm Member [2]		Assembly Design Value [3], P (lbs)
	Diameter (in)	Lower Bracket	Manual Page	Upper Bracket [5]	Manual Page	Arm ID	Max. Brace Arm Length (ft)	
R38AAEM5T07	3/8-60	RCTFR38-60	E2.4	RCTFR_	E2.4	EM5T	07	**1,110**
R38AAEM5T08		RCTFR38-60	E2.4	RCTFR_	E2.4	EM5T	08	**1,000**
R38AAEM5T09		RCTFR38-60	E2.4	RCTFR_	E2.4	EM5T	09	**790**
R38AAEM5T10		RCTFR38-60	E2.4	RCTFR_	E2.4	EM5T	10	**660**
R12AAEM5T07	1/2-60	RCTFR12-60	E2.4	RCTFR_	E2.4	EM5T	07	**1,110**
R12AAEM5T08		RCTFR12-60	E2.4	RCTFR_	E2.4	EM5T	08	**1,000**
R12AAEM5T09		RCTFR12-60	E2.4	RCTFR_	E2.4	EM5T	09	**790**
R12AAEM5T10		RCTFR12-60	E2.4	RCTFR_	E2.4	EM5T	10	**660**
R58AAEM5T07	5/8-60	RCTFR58-60	E2.4	RCTFR_	E2.4	EM5T	07	**1,110**
R58AAEM5T08		RCTFR58-60	E2.4	RCTFR_	E2.4	EM5T	08	**1,000**
R58AAEM5T09		RCTFR58-60	E2.4	RCTFR_	E2.4	EM5T	09	**790**
R58AAEM5T10		RCTFR58-60	E2.4	RCTFR_	E2.4	EM5T	10	**660**

1. See Page E0.1 for Nomenclature.
2. For Different Bracing Arm Length contact ISAT representative.
3. Nominal 60 +/- 5 Degrees Brace Angle Measured From Horizontal. Brace Force (P) Along Brace Arm.
4. Use of Any Non ISAT Bracket Voids Engineering.
5. Any size Upper Bracket within the same bracket family may be used. Refer to specified manual page for details.
6. The table above represents typical assemblies. Consult ISAT Engineering if alternate options are required.
7. See Page E2.3 for Rigid Brace Arm Assembly details.

REVIEWED FOR CODE COMPLIANCE
HCAI
OPM-0403
BY: William Staehlin
DATE: 01-26-2024
CALIFORNIA BUILDING CODE, 2022

REGISTERED PROFESSIONAL ENGINEER
MARCIN WASAZNIK
S 6612
STRUCTURAL
STATE OF CALIFORNIA

ISAT
A Division of Tomarco Contractor Specialties

International Seismic Application Technology
14848 Northam Street, La Mirada, CA 90638
877-999-4728 (Toll Free) 714-523-0845 (fax)
www.isatsb.com

DIRECTORY - ISAT RIGID BRACE ASSEMBLIES [6]								
ISAT Brace Assembly [1]	Rod	ISAT Seismic Brackets @ 0 Degrees [4]				Brace Arm Member [2]		Assembly Design Value [3], P (lbs)
	Diameter (in)	Lower Bracket	Manual Page	Upper Bracket[5]	Manual Page	Arm ID	Max. Brace Arm Length (ft)	
R38CFA1P06	3/8-0	RCHWS38-0	F1.1	ABHWS12_	F2.1	A1P	06	**550**
R38CFB1P12		RCHWS38-0	F1.1	ABHWS12_	F2.1	B1P	12	**680**
R38CFB1P09		RCHWS38-0	F1.1	ABHWS12_	F2.1	B1P	09	**780**
R38CFB1P06		RCHWS38-0	F1.1	ABHWS12_	F2.1	B1P	06	**780**
R38CFB1S12		RCHWS38-0	F1.1	ABHWS12_	F2.1	B1S	12	**780**
R38CFB1S09		RCHWS38-0	F1.1	ABHWS12_	F2.1	B1S	09	**780**
R38CFB1S06		RCHWS38-0	F1.1	ABHWS12_	F2.1	B1S	06	**780**
R38CFB2P12		RCHWS38-0	F1.1	ABHWS12_	F2.1	B2P	12	**780**
R12CFA1P06	1/2-0	RCHWS12-0	F1.1	ABHWS12_	F2.1	A1P	06	**550**
R12CFB1P12		RCHWS12-0	F1.1	ABHWS12_	F2.1	B1P	12	**680**
R12CFB1P09		RCHWS12-0	F1.1	ABHWS12_	F2.1	B1P	09	**780**
R12CFB1P06		RCHWS12-0	F1.1	ABHWS12_	F2.1	B1P	06	**780**
R12CFB1S12		RCHWS12-0	F1.1	ABHWS12_	F2.1	B1S	12	**780**
R12CFB1S09		RCHWS12-0	F1.1	ABHWS12_	F2.1	B1S	09	**780**
R12CFB1S06		RCHWS12-0	F1.1	ABHWS12_	F2.1	B1S	06	**780**
R12CFB2P12		RCHWS12-0	F1.1	ABHWS12_	F2.1	B2P	12	**780**
R12CFB2P09		RCHWS12-0	F1.1	ABHWS12_	F2.1	B2P	09	**780**
R12BGB2P09		RCHW12-0	F1	ABHWX12_	F2	B2P	09	**1,030**
R12BGB2S12		RCHW12-0	F1	ABHWX12_	F2	B2S	12	**1,030**
R58CFA1P06	5/8-0	RCHWS58-0	F1.1	ABHWS12_	F2.1	A1P	06	**550**
R58CFB1P12		RCHWS58-0	F1.1	ABHWS12_	F2.1	B1P	12	**680**
R58CFB1P09		RCHWS58-0	F1.1	ABHWS12_	F2.1	B1P	09	**840**
R58CFB1P06		RCHWS58-0	F1.1	ABHWS12_	F2.1	B1P	06	**840**
R58CFB1S12		RCHWS58-0	F1.1	ABHWS12_	F2.1	B1S	12	**780**
R58CFB1S09		RCHWS58-0	F1.1	ABHWS12_	F2.1	B1S	09	**840**
R58CFB1S06		RCHWS58-0	F1.1	ABHWS12_	F2.1	B1S	06	**840**
R58CFB2P12		RCHWS58-0	F1.1	ABHWS12_	F2.1	B2P	12	**840**
R58DGB2P09		RCHWX58-0	F1	ABHWX12_	F2	B2P	09	**1,550**
R58DGB2P06		RCHWX58-0	F1	ABHWX12_	F2	B2P	06	**1,550**
R58DGB2S12		RCHWX58-0	F1	ABHWX12_	F2	B2S	12	**1,550**
R58DGB2S09		RCHWX58-0	F1	ABHWX12_	F2	B2S	09	**1,550**

1. See Page E0.1 for Nomenclature.
2. For Different Bracing Arm Length contact ISAT representative.
3. Nominal 0 +/- 5 Degrees Brace Angle Measured From Horizontal. Brace Force (P) Along Brace Arm.
4. Use of Any Non ISAT Bracket Voids Engineering.
5. Any size Upper Bracket within the same bracket family may be used. Refer to specified manual page for details.
6. The table above represents typical assemblies. Consult ISAT Engineering if alternate options are required.
7. HSS 3X3X1/4 May Be Substituted For Any Brace Arm Where P <3,000 Lbs and Maximum Length <25 Feet .
   HSS 2X2X1/8 May Be Substituted For Any Brace Arm Where P <1,250 Lbs and Maximum Length <16 Feet .
8. See Page E2.1 for Rigid Brace Arm Assembly details.

REVIEWED FOR CODE COMPLIANCE
OPM-0403
BY: William Staehlin
DATE: 01-26-2024
CALIFORNIA BUILDING CODE 2022

REGISTERED PROFESSIONAL ENGINEER
MARCIN WASAZNIK
S 6612
STRUCTURAL
STATE OF CALIFORNIA

ISAT
A Division of Tomarco Contractor Specialties

International Seismic Application Technology
14848 Northam Street, La Mirada, CA 90638
877-999-4728 (Toll Free) 714-523-0845 (fax)
www.isatsb.com

DIRECTORY - ISAT RIGID BRACE ASSEMBLIES [6]								
ISAT Brace Assembly [1]	Rod	ISAT Seismic Brackets @ 30 Degrees [4]				Brace Arm Member [2]		Assembly Design Value [3], P (lbs)
	Diameter (in)	Lower Bracket	Manual Page	Upper Bracket[5]	Manual Page	Arm ID	Max. Brace Arm Length (ft)	
R38CFA1P06	3/8-30	RCHWS38-30	F1.1	ABHWS12-_	F2.1	A1P	06	**550**
R38CFB1P12		RCHWS38-30	F1.1	ABHWS12-_	F2.1	B1P	12	**680**
R38CFB1P09		RCHWS38-30	F1.1	ABHWS12-_	F2.1	B1P	09	**780**
R38CFB1P06		RCHWS38-30	F1.1	ABHWS12-_	F2.1	B1P	06	**780**
R38CFB1S12		RCHWS38-30	F1.1	ABHWS12-_	F2.1	B1S	12	**780**
R38CFB1S09		RCHWS38-30	F1.1	ABHWS12-_	F2.1	B1S	09	**780**
R38CFB1S06		RCHWS38-30	F1.1	ABHWS12-_	F2.1	B1S	06	**780**
R38CFB2P12		RCHWS38-30	F1.1	ABHWS12-_	F2.1	B2P	12	**780**
R12CFA1P06	1/2-30	RCHWS12-30	F1.1	ABHWS12-_	F2.1	A1P	06	**550**
R12CFB1P12		RCHWS12-30	F1.1	ABHWS12-_	F2.1	B1P	12	**680**
R12CFB1P09		RCHWS12-30	F1.1	ABHWS12-_	F2.1	B1P	09	**780**
R12CFB1P06		RCHWS12-30	F1.1	ABHWS12-_	F2.1	B1P	06	**780**
R12CFB1S12		RCHWS12-30	F1.1	ABHWS12-_	F2.1	B1S	12	**780**
R12CFB1S09		RCHWS12-30	F1.1	ABHWS12-_	F2.1	B1S	09	**780**
R12CFB1S06		RCHWS12-30	F1.1	ABHWS12-_	F2.1	B1S	06	**780**
R12CFB2P12		RCHWS12-30	F1.1	ABHWS12-_	F2.1	B2P	12	**780**
R12CFB2P09		RCHWS12-30	F1.1	ABHWS12-_	F2.1	B2P	09	**780**
R12BGB2P09		RCHW12-30	F1	ABHWX12-_	F2	B2P	09	**1,030**
R12BGB2S12		RCHW12-30	F1	ABHWX12-_	F2	B2S	12	**1,030**
R58CFA1P06	5/8-30	RCHWS58-30	F1.1	ABHWS12-_	F2.1	A1P	06	**550**
R58CFB1P12		RCHWS58-30	F1.1	ABHWS12-_	F2.1	B1P	12	**680**
R58CFB1P09		RCHWS58-30	F1.1	ABHWS12-_	F2.1	B1P	09	**840**
R58CFB1P06		RCHWS58-30	F1.1	ABHWS12-_	F2.1	B1P	06	**840**
R58CFB1S12		RCHWS58-30	F1.1	ABHWS12-_	F2.1	B1S	12	**780**
R58CFB1S09		RCHWS58-30	F1.1	ABHWS12-_	F2.1	B1S	09	**840**
R58CFB1S06		RCHWS58-30	F1.1	ABHWS12-_	F2.1	B1S	06	**840**
R58CFB2P12		RCHWS58-30	F1.1	ABHWS12-_	F2.1	B2P	12	**840**
R58DGB2P09		RCHWX58-30	F1	ABHWX12-_	F2	B2P	09	**1,550**
R58DGB2P06		RCHWX58-30	F1	ABHWX12-_	F2	B2P	06	**1,550**
R58DGB2S12		RCHWX58-30	F1	ABHWX12-_	F2	B2S	12	**1,550**
R58DGB2S09		RCHWX58-30	F1	ABHWX12-_	F2	B2S	09	**1,550**

1. See Page E0.1 for Nomenclature.
2. For Different Bracing Arm Length contact ISAT representative.
3. Nominal 30 +/- 5 Degrees Brace Angle Measured From Horizontal. Brace Force (P) Along Brace Arm.
4. Use of Any Non ISAT Bracket Voids Engineering.
5. Any size Upper Bracket within the same bracket family may be used. Refer to specified manual page for details.
6. The table above represents typical assemblies. Consult ISAT Engineering if alternate options are required.
7. HSS 3X3X1/4 May Be Substituted For Any Brace Arm Where P <3,000 Lbs and Maximum Length <25 Feet .
   HSS 2X2X1/8 May Be Substituted For Any Brace Arm Where P <1,250 Lbs and Maximum Length <16 Feet .
8. See Page E2.1 for Rigid Brace Arm Assembly details.

REVIEWED FOR CODE COMPLIANCE
OPM-0403
BY: William Staehlin
DATE: 01-26-2024
CALIFORNIA BUILDING CODE 2022

REGISTERED PROFESSIONAL ENGINEER
MARCIN WASAZNIK
S 6612
STRUCTURAL
STATE OF CALIFORNIA

ISAT
A Division of Tomarco Contractor Specialties

International Seismic Application Technology
14848 Northam Street, La Mirada, CA 90638
877-999-4728 (Toll Free) 714-523-0845 (fax)
www.isatsb.com

DIRECTORY - ISAT RIGID BRACE ASSEMBLIES [6]								
ISAT Brace Assembly [1]	Rod	ISAT Seismic Brackets @ 45 Degrees [4]				Brace Arm Member [2]		Assembly Design Value [3], P (lbs)
	Diameter (in)	Lower Bracket	Manual Page	Upper Bracket[5]	Manual Page	Arm ID	Max. Brace Arm Length (ft)	
R38CFA1P06	3/8	RCHWS38	F1.1	ABHWS_	F2.1	A1P	06	**550**
R38CFB1P12		RCHWS38	F1.1	ABHWS_	F2.1	B1P	12	**680**
R38CFB1P09		RCHWS38	F1.1	ABHWS_	F2.1	B1P	09	**910**
R38CFB1P06		RCHWS38	F1.1	ABHWS_	F2.1	B1P	06	**1,250**
R38CFB1S12		RCHWS38	F1.1	ABHWS_	F2.1	B1S	12	**780**
R38CFB1S09		RCHWS38	F1.1	ABHWS_	F2.1	B1S	09	**1,040**
R38CFB1S06		RCHWS38	F1.1	ABHWS_	F2.1	B1S	06	**1,360**
R38CFB2P12		RCHWS38	F1.1	ABHWS_	F2.1	B2P	12	**1,360**
R12CFA1P06	1/2	RCHWS12	F1.1	ABHWS_	F2.1	A1P	06	**550**
R12CFB1P12		RCHWS12	F1.1	ABHWS_	F2.1	B1P	12	**680**
R12CFB1P09		RCHWS12	F1.1	ABHWS_	F2.1	B1P	09	**910**
R12CFB1P06		RCHWS12	F1.1	ABHWS_	F2.1	B1P	06	**1,250**
R12CFB1S12		RCHWS12	F1.1	ABHWS_	F2.1	B1S	12	**780**
R12CFB1S09		RCHWS12	F1.1	ABHWS_	F2.1	B1S	09	**1,040**
R12CFB1S06		RCHWS12	F1.1	ABHWS_	F2.1	B1S	06	**1,420**
R12CFB2P12		RCHWS12	F1.1	ABHWS_	F2.1	B2P	12	**1,660**
R12CFB2P09		RCHWS12	F1.1	ABHWS_	F2.1	B2P	09	**1,860**
R12BGB2P09		RCHW12	F1	ABHWX_	F2	B2P	09	**2,290**
R12BGB2S12		RCHW12	F1	ABHWX_	F2	B2S	12	**1,910**
R58CFA1P06	5/8	RCHWS58	F1.1	ABHWS_	F2.1	A1P	06	**550**
R58CFB1P12		RCHWS58	F1.1	ABHWS_	F2.1	B1P	12	**680**
R58CFB1P09		RCHWS58	F1.1	ABHWS_	F2.1	B1P	09	**910**
R58CFB1P06		RCHWS58	F1.1	ABHWS_	F2.1	B1P	06	**1,250**
R58CFB1S12		RCHWS58	F1.1	ABHWS_	F2.1	B1S	12	**780**
R58CFB1S09		RCHWS58	F1.1	ABHWS_	F2.1	B1S	09	**1,040**
R58CFB1S06		RCHWS58	F1.1	ABHWS_	F2.1	B1S	06	**1,420**
R58CFB2P12		RCHWS58	F1.1	ABHWS_	F2.1	B2P	12	**1,660**
R58DGB2P09		RCHWX58	F1	ABHWX_	F2	B2P	09	**2,390**
R58DGB2P06		RCHWX58	F1	ABHWX_	F2	B2P	06	**2,730**
R58DGB2S12		RCHWX58	F1	ABHWX_	F2	B2S	12	**1,910**
R58DGB2S09		RCHWX58	F1	ABHWX_	F2	B2S	09	**2,730**

1. See Page E0.1 for Nomenclature.
2. For Different Bracing Arm Length contact ISAT representative.
3. Nominal 45 +/- 5 Degrees Brace Angle Measured From Horizontal. Brace Force (P) Along Brace Arm.
4. Use of Any Non ISAT Bracket Voids Engineering.
5. Any size Upper Bracket within the same bracket family may be used. Refer to specified manual page for details.
6. The table above represents typical assemblies. Consult ISAT Engineering if alternate options are required.
7. HSS 3X3X1/4 May Be Substituted For Any Brace Arm Where P <3,000 Lbs and Maximum Length <25 Feet .
   HSS 2X2X1/8 May Be Substituted For Any Brace Arm Where P <1,250 Lbs and Maximum Length <16 Feet .
8. See Page E2.1 for Rigid Brace Arm Assembly details.

REVIEWED FOR CODE COMPLIANCE BY William Staehlin DATE: 01-29-2024 OPM-0403 CALIFORNIA OFFICE OF PROJECT DEVELOPMENT

REGISTERED PROFESSIONAL ENGINEER MARCIN WASAZNIK S 6612 STRUCTURAL STATE OF CALIFORNIA

ISAT
A Division of Tomarco Contractor Specialties

International Seismic Application Technology
14848 Northam Street, La Mirada, CA 90638
877-999-4728 (Toll Free) 714-523-0845 (fax)
www.isatsb.com

DIRECTORY - ISAT RIGID BRACE ASSEMBLIES [6]								
ISAT Brace Assembly [1]	Rod	ISAT Seismic Brackets @ 60 Degrees [4]				Brace Arm Member [2]		Assembly Design Value [3], P (lbs)
	Diameter (in)	Lower Bracket	Manual Page	Upper Bracket[5]	Manual Page	Arm ID	Max. Brace Arm Length (ft)	
R38CFA1P06	3/8-60	RCHWS38-60	F1.1	ABHWS12-_	F2.1	A1P	06	**550**
R38CFB1P12		RCHWS38-60	F1.1	ABHWS12-_	F2.1	B1P	12	**680**
R38CFB1P09		RCHWS38-60	F1.1	ABHWS12-_	F2.1	B1P	09	**760**
R38CFB1P06		RCHWS38-60	F1.1	ABHWS12-_	F2.1	B1P	06	**760**
R38CFB1S12		RCHWS38-60	F1.1	ABHWS12-_	F2.1	B1S	12	**760**
R38CFB1S09		RCHWS38-60	F1.1	ABHWS12-_	F2.1	B1S	09	**760**
R38CFB1S06		RCHWS38-60	F1.1	ABHWS12-_	F2.1	B1S	06	**760**
R38CFB2P12		RCHWS38-60	F1.1	ABHWS12-_	F2.1	B2P	12	**760**
R12CFA1P06	1/2-60	RCHWS12-60	F1.1	ABHWS12-_	F2.1	A1P	06	**550**
R12CFB1P12		RCHWS12-60	F1.1	ABHWS12-_	F2.1	B1P	12	**680**
R12CFB1P09		RCHWS12-60	F1.1	ABHWS12-_	F2.1	B1P	09	**760**
R12CFB1P06		RCHWS12-60	F1.1	ABHWS12-_	F2.1	B1P	06	**760**
R12CFB1S12		RCHWS12-60	F1.1	ABHWS12-_	F2.1	B1S	12	**760**
R12CFB1S09		RCHWS12-60	F1.1	ABHWS12-_	F2.1	B1S	09	**760**
R12CFB1S06		RCHWS12-60	F1.1	ABHWS12-_	F2.1	B1S	06	**760**
R12CFB2P12		RCHWS12-60	F1.1	ABHWS12-_	F2.1	B2P	12	**760**
R12CFB2P09		RCHWS12-60	F1.1	ABHWS12-_	F2.1	B2P	09	**760**
R12BGB2P09		RCHW12-60	F1	ABHWX12-_	F2	B2P	09	**800**
R12BGB2S12		RCHW12-60	F1	ABHWX12-_	F2	B2S	12	**800**
R58CFA1P06	5/8-60	RCHWS58-60	F1.1	ABHWS12-_	F2.1	A1P	06	**550**
R58CFB1P12		RCHWS58-60	F1.1	ABHWS12-_	F2.1	B1P	12	**680**
R58CFB1P09		RCHWS58-60	F1.1	ABHWS12-_	F2.1	B1P	09	**870**
R58CFB1P06		RCHWS58-60	F1.1	ABHWS12-_	F2.1	B1P	06	**870**
R58CFB1S12		RCHWS58-60	F1.1	ABHWS12-_	F2.1	B1S	12	**780**
R58CFB1S09		RCHWS58-60	F1.1	ABHWS12-_	F2.1	B1S	09	**870**
R58CFB1S06		RCHWS58-60	F1.1	ABHWS12-_	F2.1	B1S	06	**870**
R58CFB2P12		RCHWS58-60	F1.1	ABHWS12-_	F2.1	B2P	12	**870**
R58DGB2P09		RCHWX58-60	F1	ABHWX12-_	F2	B2P	09	**1,390**
R58DGB2P06		RCHWX58-60	F1	ABHWX12-_	F2	B2P	06	**1,390**
R58DGB2S12		RCHWX58-60	F1	ABHWX12-_	F2	B2S	12	**1,390**
R58DGB2S09		RCHWX58-60	F1	ABHWX12-_	F2	B2S	09	**1,390**

1. See Page E0.1 for Nomenclature.
2. For Different Bracing Arm Length contact ISAT representative.
3. Nominal 60 +/- 5 Degrees Brace Angle Measured From Horizontal. Brace Force (P) Along Brace Arm.
4. Use of Any Non ISAT Bracket Voids Engineering.
5. Any size Upper Bracket within the same bracket family may be used. Refer to specified manual page for details.
6. The table above represents typical assemblies. Consult ISAT Engineering if alternate options are required.
7. HSS 3X3X1/4 May Be Substituted For Any Brace Arm Where P <3,000 Lbs and Maximum Length <25 Feet .
   HSS 2X2X1/8 May Be Substituted For Any Brace Arm Where P <1,250 Lbs and Maximum Length <16 Feet .
8. See Page E2.1 for Rigid Brace Arm Assembly details.

REVIEWED FOR CODE COMPLIANCE
OPM-0403
BY: William Staehlin
DATE: 01-26-2024
CALIFORNIA BUILDING CODE 2022

REGISTERED PROFESSIONAL ENGINEER
MARCIN WASAZNIK
S 6612
STRUCTURAL
STATE OF CALIFORNIA

ISAT
A Division of Tomarco Contractor Specialties

International Seismic Application Technology
14848 Northam Street, La Mirada, CA 90638
877-999-4728 (Toll Free) 714-523-0845 (fax)
www.isatsb.com

DIRECTORY - ISAT RIGID BRACE ASSEMBLIES [6]								
ISAT Brace Assembly [1]	Rod	ISAT Seismic Brackets @ 0 Degrees [4]				Brace Arm Member [2]		Assembly Design Value [3], P (lbs)
	Diameter (in)	Lower Bracket	Manual Page	Upper Bracket[5]	Manual Page	Arm ID	Max. Brace Arm Length (ft)	
R34CFA1P06	3/4-0	RCHWS34-0	F1.1	ABHWS12_	F2.1	A1P	06	**550**
R34CFB1P12		RCHWS34-0	F1.1	ABHWS12_	F2.1	B1P	12	**680**
R34CFB1P09		RCHWS34-0	F1.1	ABHWS12_	F2.1	B1P	09	**840**
R34CFB1P06		RCHWS34-0	F1.1	ABHWS12_	F2.1	B1P	06	**840**
R34CFB1S12		RCHWS34-0	F1.1	ABHWS12_	F2.1	B1S	12	**780**
R34CFB1S09		RCHWS34-0	F1.1	ABHWS12_	F2.1	B1S	09	**840**
R34CFB1S06		RCHWS34-0	F1.1	ABHWS12_	F2.1	B1S	06	**840**
R34CFB2P12		RCHWS34-0	F1.1	ABHWS12_	F2.1	B2P	12	**840**
R34CFB2P09		RCHWS34-0	F1.1	ABHWS12_	F2.1	B2P	09	**840**
R34DGB2P12		RCHWX34-0	F1	ABHWX12_	F2	B2P	12	**1,550**
R34DGB2P09		RCHWX34-0	F1	ABHWX12_	F2	B2P	09	**1,550**
R34DGB2P06		RCHWX34-0	F1	ABHWX12_	F2	B2P	06	**1,550**
R34DGB2S12		RCHWX34-0	F1	ABHWX12_	F2	B2S	12	**1,550**
R34DGB2S09		RCHWX34-0	F1	ABHWX12_	F2	B2S	09	**1,550**
R12FFB1P09	1/2-0	ABHWS12-0	F2.1	ABHWS12_	F2.1	B1P	09	**840**
R12FFB1P06		ABHWS12-0	F2.1	ABHWS12_	F2.1	B1P	06	**840**
R12FFB2P12		ABHWS12-0	F2.1	ABHWS12_	F2.1	B2P	12	**840**
R12EEB2S12		ABHW12-0	F2	ABHW12_	F2	B2S	12	**1,430**
R12EEB2S09		ABHW12-0	F2	ABHW12_	F2	B2S	09	**1,430**
R12GGB2S06		ABHWX12-0	F2	ABHWX12_	F2	B2S	06	**1,570**

1. See Page E0.1 for Nomenclature.
2. For Different Bracing Arm Length contact ISAT representative.
3. Nominal 0 +/- 5 Degrees Brace Angle Measured From Horizontal. Brace Force (P) Along Brace Arm.
4. Use of Any Non ISAT Bracket Voids Engineering.
5. Any size Upper Bracket within the same bracket family may be used. Refer to specified manual page for details.
6. The table above represents typical assemblies. Consult ISAT Engineering if alternate options are required.
7. HSS 3X3X1/4 May Be Substituted For Any Brace Arm Where P <3,000 Lbs and Maximum Length <25 Feet .
   HSS 2X2X1/8 May Be Substituted For Any Brace Arm Where P <1,250 Lbs and Maximum Length <16 Feet .
8. See Page E2.1 for Rigid Brace Arm Assembly details.

REVIEWED FOR CODE COMPLIANCE
HCAI
OPM-0403
BY: William Staehlin
DATE: 01-26-2024
CALIFORNIA BUILDING CODE 2022

REGISTERED PROFESSIONAL ENGINEER
MARCIN WASAZNIK
S 6612
STRUCTURAL
STATE OF CALIFORNIA

ISAT
A Division of Tomarco Contractor Specialties
International Seismic Application Technology
14848 Northam Street, La Mirada, CA 90638
877-999-4728 (Toll Free) 714-523-0845 (fax)
www.isatsb.com

DIRECTORY - ISAT RIGID BRACE ASSEMBLIES [6]								
ISAT Brace Assembly [1]	Rod	ISAT Seismic Brackets @ 30 Degrees [4]				Brace Arm Member [2]		Assembly Design Value [3], P (lbs)
	Diameter (in)	Lower Bracket	Manual Page	Upper Bracket[5]	Manual Page	Arm ID	Max. Brace Arm Length (ft)	
R34CFA1P06	3/4-30	RCHWS34-30	F1.1	ABHWS12-_	F2.1	A1P	06	**550**
R34CFB1P12		RCHWS34-30	F1.1	ABHWS12-_	F2.1	B1P	12	**680**
R34CFB1P09		RCHWS34-30	F1.1	ABHWS12-_	F2.1	B1P	09	**840**
R34CFB1P06		RCHWS34-30	F1.1	ABHWS12-_	F2.1	B1P	06	**840**
R34CFB1S12		RCHWS34-30	F1.1	ABHWS12-_	F2.1	B1S	12	**780**
R34CFB1S09		RCHWS34-30	F1.1	ABHWS12-_	F2.1	B1S	09	**840**
R34CFB1S06		RCHWS34-30	F1.1	ABHWS12-_	F2.1	B1S	06	**840**
R34CFB2P12		RCHWS34-30	F1.1	ABHWS12-_	F2.1	B2P	12	**840**
R34CFB2P09		RCHWS34-30	F1.1	ABHWS12-_	F2.1	B2P	09	**840**
R34DGB2P12		RCHWX34-30	F1	ABHWX12-_	F2	B2P	12	**1,550**
R34DGB2P09		RCHWX34-30	F1	ABHWX12-_	F2	B2P	09	**1,550**
R34DGB2P06		RCHWX34-30	F1	ABHWX12-_	F2	B2P	06	**1,550**
R34DGB2S12		RCHWX34-30	F1	ABHWX12-_	F2	B2S	12	**1,550**
R34DGB2S09		RCHWX34-30	F1	ABHWX12-_	F2	B2S	09	**1,550**
R12FFB1P09	1/2-30	ABHWS12-30	F2.1	ABHWS12-_	F2.1	B1P	09	**840**
R12FFB1P06		ABHWS12-30	F2.1	ABHWS12-_	F2.1	B1P	06	**840**
R12FFB2P12		ABHWS12-30	F2.1	ABHWS12-_	F2.1	B2P	12	**840**
R12EEB2S12		ABHW12-30	F2	ABHW12-_	F2	B2S	12	**1,430**
R12EEB2S09		ABHW12-30	F2	ABHW12-_	F2	B2S	09	**1,430**
R12GGB2S06		ABHWX12-30	F2	ABHWX12-_	F2	B2S	06	**1,570**

1. See Page E0.1 for Nomenclature.
2. For Different Bracing Arm Length contact ISAT representative.
3. Nominal 30 +/- 5 Degrees Brace Angle Measured From Horizontal. Brace Force (P) Along Brace Arm.
4. Use of Any Non ISAT Bracket Voids Engineering.
5. Any size Upper Bracket within the same bracket family may be used. Refer to specified manual page for details.
6. The table above represents typical assemblies. Consult ISAT Engineering if alternate options are required.
7. HSS 3X3X1/4 May Be Substituted For Any Brace Arm Where P <3,000 Lbs and Maximum Length <25 Feet .
   HSS 2X2X1/8 May Be Substituted For Any Brace Arm Where P <1,250 Lbs and Maximum Length <16 Feet .
8. See Page E2.1 for Rigid Brace Arm Assembly details.

REVIEWED FOR CODE COMPLIANCE
HCAI
OPM-0403
BY: William Staehlin
DATE: 01-26-2024
CALIFORNIA BUILDING CODE 2022

REGISTERED PROFESSIONAL ENGINEER
MARCIN WASAZNIK
S 6612
STRUCTURAL
STATE OF CALIFORNIA

ISAT
A Division of Tomarco Contractor Specialties
International Seismic Application Technology
14848 Northam Street, La Mirada, CA 90638
877-999-4728 (Toll Free) 714-523-0845 (fax)
www.isatsb.com

DIRECTORY - ISAT RIGID BRACE ASSEMBLIES [6]								
ISAT Brace Assembly [1]	Rod	ISAT Seismic Brackets @ 45 Degrees [4]				Brace Arm Member [2]		Assembly Design Value [3], P (lbs)
	Diameter (in)	Lower Bracket	Manual Page	Upper Bracket[5]	Manual Page	Arm ID	Max. Brace Arm Length (ft)	
R34CFA1P06	3/4	RCHWS34	F1.1	ABHWS_	F2.1	A1P	06	**550**
R34CFB1P12		RCHWS34	F1.1	ABHWS_	F2.1	B1P	12	**680**
R34CFB1P09		RCHWS34	F1.1	ABHWS_	F2.1	B1P	09	**910**
R34CFB1P06		RCHWS34	F1.1	ABHWS_	F2.1	B1P	06	**1,250**
R34CFB1S12		RCHWS34	F1.1	ABHWS_	F2.1	B1S	12	**780**
R34CFB1S09		RCHWS34	F1.1	ABHWS_	F2.1	B1S	09	**1,040**
R34CFB1S06		RCHWS34	F1.1	ABHWS_	F2.1	B1S	06	**1,420**
R34CFB2P12		RCHWS34	F1.1	ABHWS_	F2.1	B2P	12	**1,660**
R34CFB2P09		RCHWS34	F1.1	ABHWS_	F2.1	B2P	09	**1,690**
R34DGB2P12		RCHWX34	F1	ABHWX_	F2	B2P	12	**1,660**
R34DGB2P09		RCHWX34	F1	ABHWX_	F2	B2P	09	**2,390**
R34DGB2P06		RCHWX34	F1	ABHWX_	F2	B2P	06	**2,730**
R34DGB2S12		RCHWX34	F1	ABHWX_	F2	B2S	12	**1,910**
R34DGB2S09		RCHWX34	F1	ABHWX_	F2	B2S	09	**2,730**
R12FFB1P09	1/2	ABHWS12	F2.1	ABHWS_	F2.1	B1P	09	**910**
R12FFB1P06		ABHWS12	F2.1	ABHWS_	F2.1	B1P	06	**1,250**
R12FFB2P12		ABHWS12	F2.1	ABHWS_	F2.1	B2P	12	**1,660**
R12EEB2S12		ABHW12	F2	ABHW_	F2	B2S	12	**1,910**
R12EEB2S09		ABHW12	F2	ABHW_	F2	B2S	09	**2,220**
R12GGB2S06		ABHWX12	F2	ABHWX_	F2	B2S	06	**2,900**

1. See Page E0.1 for Nomenclature.
2. For Different Bracing Arm Length contact ISAT representative.
3. Nominal 45 +/- 5 Degrees Brace Angle Measured From Horizontal. Brace Force (P) Along Brace Arm.
4. Use of Any Non ISAT Bracket Voids Engineering.
5. Any size Upper Bracket within the same bracket family may be used. Refer to specified manual page for details.
6. The table above represents typical assemblies. Consult ISAT Engineering if alternate options are required.
7. HSS 3X3X1/4 May Be Substituted For Any Brace Arm Where P <3,000 Lbs and Maximum Length <25 Feet .
   HSS 2X2X1/8 May Be Substituted For Any Brace Arm Where P <1,250 Lbs and Maximum Length <16 Feet .
8. See Page E2.1 for Rigid Brace Arm Assembly details.

REVIEWED FOR CODE COMPLIANCE
HCAI
OPM-0403
BY: William Staehlin
DATE: 01-26-2024
CALIFORNIA BUILDING CODE 2022

REGISTERED PROFESSIONAL ENGINEER
MARCIN WASAZNIK
S 6612
STRUCTURAL
STATE OF CALIFORNIA

ISAT
A Division of Tomarco Contractor Specialties

International Seismic Application Technology
14848 Northam Street, La Mirada, CA 90638
877-999-4728 (Toll Free) 714-523-0845 (fax)
www.isatsb.com

DIRECTORY - ISAT RIGID BRACE ASSEMBLIES [6]								
ISAT Brace Assembly [1]	Rod	ISAT Seismic Brackets @ 60 Degrees [4]				Brace Arm Member [2]		Assembly Design Value [3], P (lbs)
	Diameter (in)	Lower Bracket	Manual Page	Upper Bracket[5]	Manual Page	Arm ID	Max. Brace Arm Length (ft)	
R34CFA1P06	3/4-60	RCHWS34-60	F1.1	ABHWS12-_	F2.1	A1P	06	**550**
R34CFB1P12		RCHWS34-60	F1.1	ABHWS12-_	F2.1	B1P	12	**680**
R34CFB1P09		RCHWS34-60	F1.1	ABHWS12-_	F2.1	B1P	09	**870**
R34CFB1P06		RCHWS34-60	F1.1	ABHWS12-_	F2.1	B1P	06	**870**
R34CFB1S12		RCHWS34-60	F1.1	ABHWS12-_	F2.1	B1S	12	**780**
R34CFB1S09		RCHWS34-60	F1.1	ABHWS12-_	F2.1	B1S	09	**870**
R34CFB1S06		RCHWS34-60	F1.1	ABHWS12-_	F2.1	B1S	06	**870**
R34CFB2P12		RCHWS34-60	F1.1	ABHWS12-_	F2.1	B2P	12	**870**
R34CFB2P09		RCHWS34-60	F1.1	ABHWS12-_	F2.1	B2P	09	**870**
R34DGB2P12		RCHWX34-60	F1	ABHWX12-_	F2	B2P	12	**1,390**
R34DGB2P09		RCHWX34-60	F1	ABHWX12-_	F2	B2P	09	**1,390**
R34DGB2P06		RCHWX34-60	F1	ABHWX12-_	F2	B2P	06	**1,390**
R34DGB2S12		RCHWX34-60	F1	ABHWX12-_	F2	B2S	12	**1,390**
R34DGB2S09		RCHWX34-60	F1	ABHWX12-_	F2	B2S	09	**1,390**
R12FFB1P09	1/2-60	ABHWS12-60	F2.1	ABHWS12-_	F2.1	B1P	09	**910**
R12FFB1P06		ABHWS12-60	F2.1	ABHWS12-_	F2.1	B1P	06	**1,050**
R12FFB2P12		ABHWS12-60	F2.1	ABHWS12-_	F2.1	B2P	12	**1,050**
R12EEB2S12		ABHW12-60	F2	ABHW12-_	F2	B2S	12	**1,070**
R12EEB2S09		ABHW12-60	F2	ABHW12-_	F2	B2S	09	**1,070**
R12GGB2S06		ABHWX12-60	F2	ABHWX12-_	F2	B2S	06	**1,390**

1. See Page E0.1 for Nomenclature.
2. For Different Bracing Arm Length contact ISAT representative.
3. Nominal 60 +/- 5 Degrees Brace Angle Measured From Horizontal. Brace Force (P) Along Brace Arm.
4. Use of Any Non ISAT Bracket Voids Engineering.
5. Any size Upper Bracket within the same bracket family may be used. Refer to specified manual page for details.
6. The table above represents typical assemblies. Consult ISAT Engineering if alternate options are required.
7. HSS 3X3X1/4 May Be Substituted For Any Brace Arm Where P <3,000 Lbs and Maximum Length <25 Feet .
   HSS 2X2X1/8 May Be Substituted For Any Brace Arm Where P <1,250 Lbs and Maximum Length <16 Feet .
8. See Page E2.1 for Rigid Brace Arm Assembly details.

REVIEWED FOR CODE COMPLIANCE
HCAI
OPM-0403
BY: William Staehlin
DATE: 01-26-2024
CALIFORNIA BUILDING CODE 2022

REGISTERED PROFESSIONAL ENGINEER
MARCIN WASAZNIK
S 6612
STRUCTURAL
STATE OF CALIFORNIA

ISAT
A Division of Tomarco Contractor Specialties

International Seismic Application Technology
14848 Northam Street, La Mirada, CA 90638
877-999-4728 (Toll Free) 714-523-0845 (fax)
www.isatsb.com

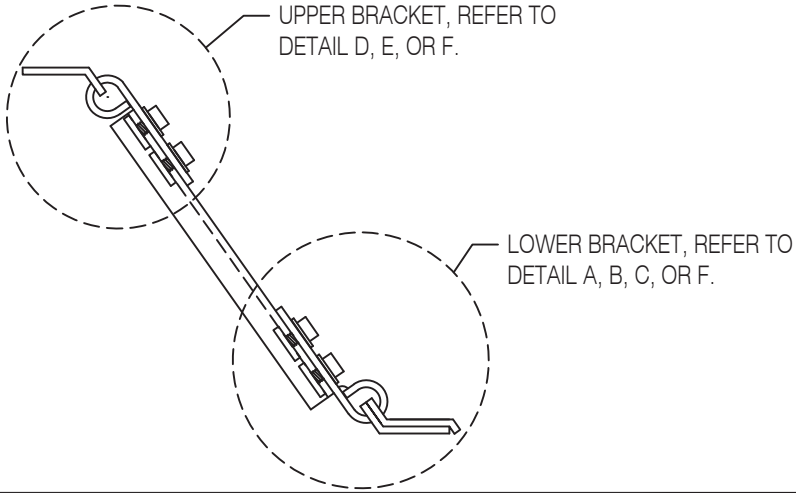

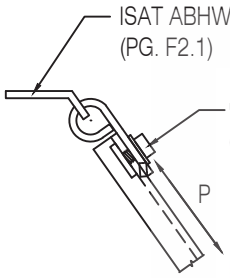

DETAIL "D"

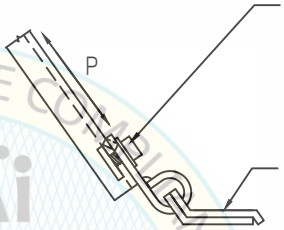

DETAIL "A"

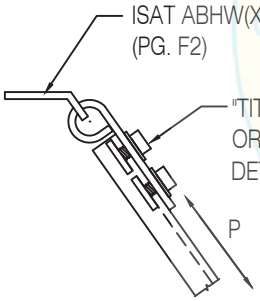

DETAIL "E"

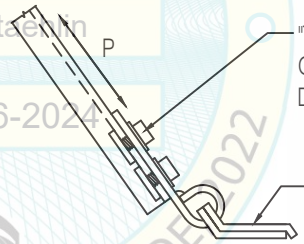

DETAIL "B"

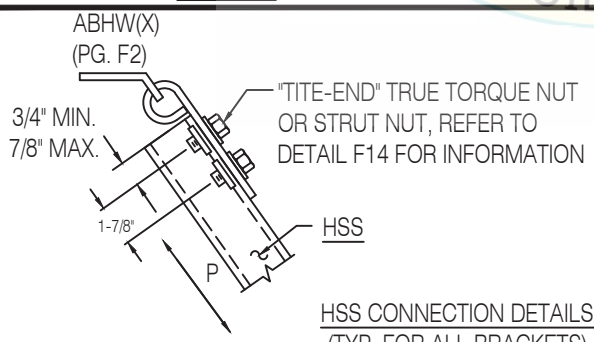

DETAIL "F"

HSS CONNECTION DETAILS
(TYP. FOR ALL BRACKETS)

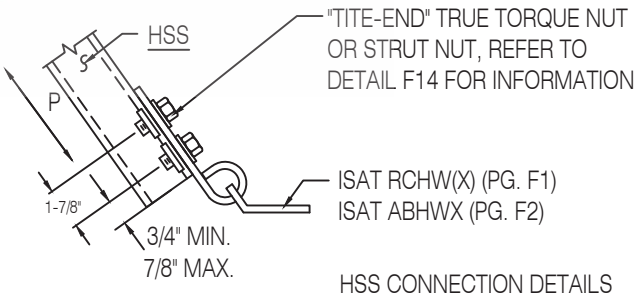

DETAIL "C"

HSS CONNECTION DETAILS
(TYP. FOR ALL BRACKETS)

RIGID BRACE ASSEMBLY DETAILS

REVIEWED FOR CODE COMPLIANCE
HCAi
OPM-0403
BY: William Staehlin
DATE: 01-26-2024
CALIFORNIA BUILDING CODE 2022

REGISTERED PROFESSIONAL ENGINEER
MARCIN WASAZNIK
S 6612
STRUCTURAL
STATE OF CALIFORNIA

ISAT
A Division of Tomarco Contractor Specialties

International Seismic Application Technology
14848 Northam Street, La Mirada, CA 90638
877-999-4728 (Toll Free) 714-523-0845 (fax)
www.isatsb.com

Rev. 2
06/28/18

Page
E2.1

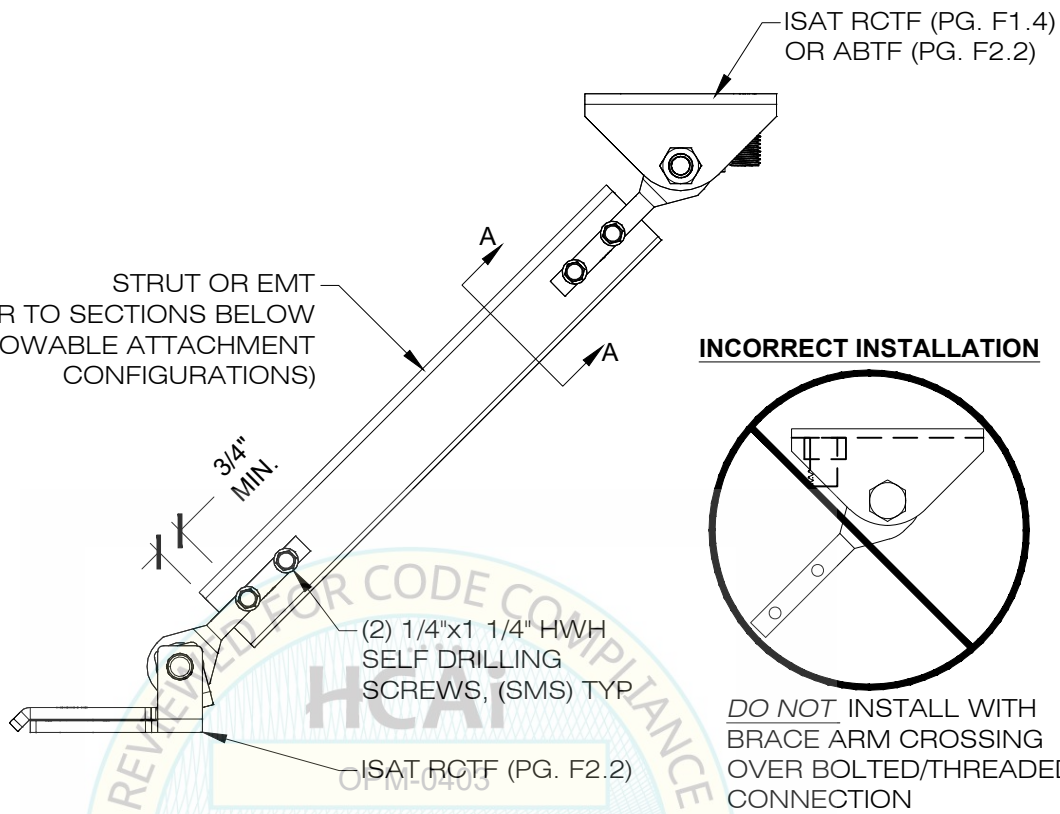

INCORRECT INSTALLATION

DO NOT INSTALL WITH BRACE ARM CROSSING OVER BOLTED/THREADED CONNECTION

REVIEWED FOR CODE COMPLIANCE
HCAI
OPM-0403
BY: William Staehlin
DATE:
CALIFORNIA BUILDING CODE 2022

ALLOWABLE ATTACHMENT CONFIGURATIONS PER BRACE MEMBER TYPE

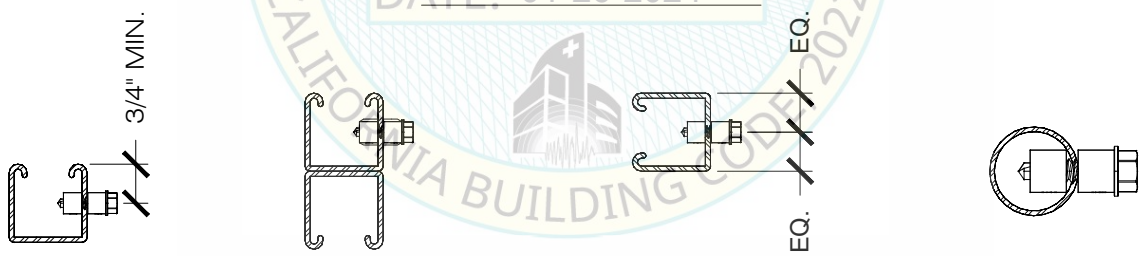

SECTION A-A [1,2] **SECTION A-A** [1,2] **SECTION A-A** [1,3] **SECTION A-A** [4]

NOTES:
1. SOLID STRUT (ALL SIZES AND PROFILES EXCEPT SHALLOW STRUT)
2. PERFORATED STRUT (ALL SIZES AND PROFILES)
3. SOLID STRUT (SHALLOW DEPTH)
4. EMT

RIGID BRACE ARM ASSEMBLY - STF BRACKET

REGISTERED PROFESSIONAL ENGINEER MARCIN WASAZNIK S-6612 STRUCTURAL STATE OF CALIFORNIA

ISAT
A Division of Tomarco Contractor Specialties
International Seismic Application Technology
14848 Northam Street, La Mirada, CA 90638
877-999-4728 (Toll Free) 714-523-0845 (fax)
www.isatsb.com

Rev. 0
12/20/23
Page
E2.3

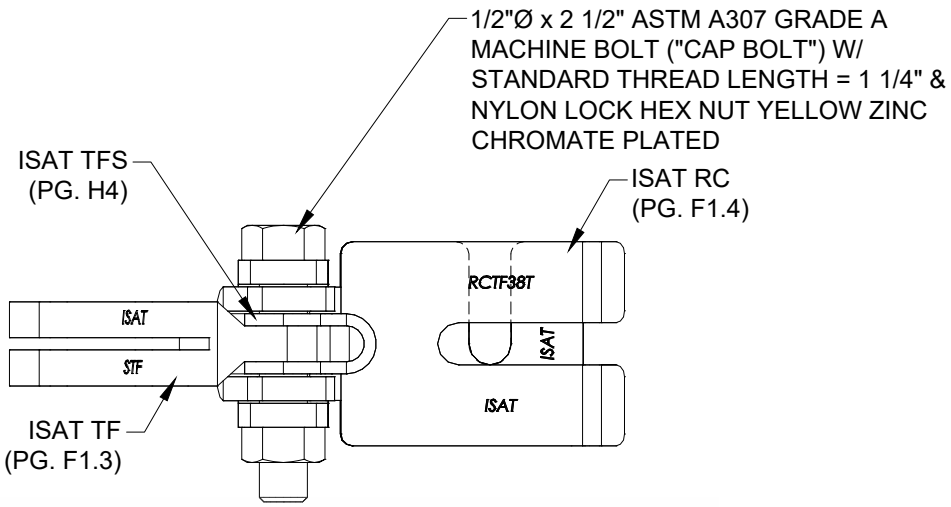

PLAN VIEW

REVIEWED FOR CODE COMPLIANCE
HCAi
OPM-0403
BY: William Staehlin
DATE: 01-26-2024
CALIFORNIA BUILDING CODE

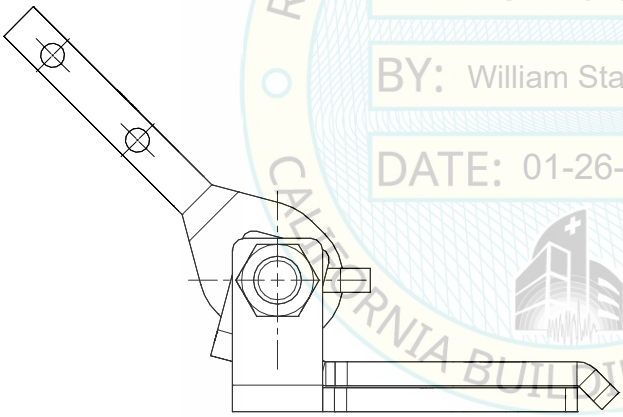

SIDE VIEW

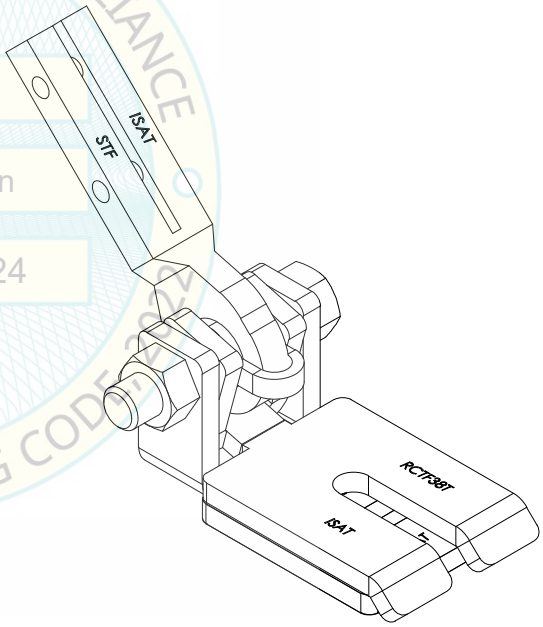

ISOMETRIC VIEW

ROD CAPTURE TUNING FORK (RCTFR) - RIGID ASSEMBLY

ISAT
A Division of Tomarco Contractor Specialties
International Seismic Application Technology
14848 Northam Street, La Mirada, CA 90638
877-999-4728 (Toll Free) 714-523-0845 (fax)
www.isatsb.com

Rev. 0
10/11/19

Page
E2.4

DIRECTORY - ISAT CABLE BRACE ASSEMBLIES [4] - 0°										
ISAT Brace Assembly [1]	Rod	Lower Connection[3]				Upper Connection[3]				Assembly Design Value [2], P (Lbs)
	Diameter (in)	Lower Bracket	Manual Page	Diameter & Connection Assembly Type	Manual Page	Upper Bracket	Manual Page	Diameter & Connection Assembly Type	Manual Page	
C38AA04WS	3/8-0	RCTFC38-0	E4.7	1/8 Wedgy23	E4.4	RCTFC12-0	E4.7	1/8 Swaged	E4.3	**670**
C38AA06WS		RCTFC38-0	E4.7	3/16 Wedgy45	E4.4	RCTFC12-0	E4.7	3/16 Swaged	E4.3	**1,100**
C12AA04WS	1/2-0	RCTFC12-0	E4.7	1/8 Wedgy23	E4.4	RCTFC12-0	E4.7	1/8 Swaged	E4.3	**670**
C12AA06WS		RCTFC12-0	E4.7	3/16 Wedgy45	E4.4	RCTFC12-0	E4.7	3/16 Swaged	E4.3	**1,470**
C58AA04WS	5/8-0	RCTFC58-0	E4.7	1/8 Wedgy23	E4.4	RCTFC12-0	E4.7	1/8 Swaged	E4.3	**670**
C58AA06WS		RCTFC58-0	E4.7	3/16 Wedgy45	E4.4	RCTFC12-0	E4.7	3/16 Swaged	E4.3	**1,470**
C38CF04WS	3/8-0	RCHWS38-0	F1.1	1/8 Wedgy23	E4.4	ABHWS12-0	F2.1	1/8 Swaged	E4.3	**670**
C38CF06WS		RCHWS38-0	F1.1	3/16 Wedgy45	E4.4	ABHWS12-0	F2.1	3/16 Swaged	E4.3	**780**
C12CF04WS	1/2-0	RCHWS12-0	F1.1	1/8 Wedgy23	E4.4	ABHWS12-0	F2.1	1/8 Swaged	E4.3	**670**
C12CF06WS		RCHWS12-0	F1.1	3/16 Wedgy45	E4.4	ABHWS12-0	F2.1	3/16 Swaged	E4.3	**780**
C58CF04WS	5/8-0	RCHWS58-0	F1.1	1/8 Wedgy23	E4.4	ABHWS12-0	F2.1	1/8 Swaged	E4.3	**670**
C58DG06WS		RCHWX58-0	F1	3/16 Wedgy45	E4.4	ABHWX12-0	F2	3/16 Swaged	E4.3	**1,480**
C58DG06TS		RCHWX58-0	F1	3/16 Thru-Bolted	E4.2	ABHWX12-0	F2	3/16 Swaged	E4.3	**1,550**
C34CF04WS	3/4-0	RCHWS34-0	F1.1	1/8 Wedgy23	E4.4	ABHWS12-0	F2.1	1/8 Swaged	E4.3	**670**
C34DG06WS		RCHWX34-0	F1	3/16 Wedgy45	E4.4	ABHWX12-0	F2	3/16 Swaged	E4.3	**1,480**
C34DG06TS		RCHWX34-0	F1	3/16 Thru-Bolted	E4.2	ABHWX12-0	F2	3/16 Swaged	E4.3	**1,550**
C12FF04WC	1/2-0	ABHWS12-0	F2.1	1/8 Wedgy23	E4.4	ABHWS12-0	F2.1	1/8 Cable Clip	E4.3	**670**
C12GG06CC		ABHWX12-0	F2	3/16 Cable Clip	E4.3	ABHWX12-0	F2	3/16 Cable Clip	E4.3	**1,570**

1. See Page E0.1 for Nomenclature.
2. Nominal 0 +/- 5 Degrees Brace Angle Measured From Horizontal. Brace Force (P) Along Brace Arm.
3. Use of Any Non ISAT Bracket Voids Engineering.
4. The table above represents typical assemblies. Consult ISAT Engineering if alternate options are required.
5. See Page E4.2 for Rod Capture Cable Assembly - RCHW detail.
6. See Page E4.3 for Cable Clip Assembly detail.
7. See Page E4.4 for Wedgy Looped Assembly detail.
8. See Page E4.7 for Rod Capture Tuning Fork Cable Assembly - RCTFC detail.

REVIEWED FOR CODE COMPLIANCE
OPM-0403
BY: William Staehlin
DATE: 01-26-2024
CALIFORNIA BUILDING CODE, 2022

REGISTERED PROFESSIONAL ENGINEER
MARCIN WASAZNIK
S 6612
STRUCTURAL
STATE OF CALIFORNIA

ISAT
A Division of Tomarco Contractor Specialties

International Seismic Application Technology
14848 Northam Street, La Mirada, CA 90638
877-999-4728 (Toll Free) 714-523-0845 (fax)
www.isatsb.com

DIRECTORY - ISAT CABLE BRACE ASSEMBLIES[4] - 30°										
ISAT Brace Assembly [1]	Rod	Lower Connection[3]				Upper Connection[3]				Assembly Design Value [2], P (Lbs)
	Diameter (in)	Lower Bracket	Manual Page	Diameter & Connection Assembly Type	Manual Page	Upper Bracket	Manual Page	Diameter & Connection Assembly Type	Manual Page	
C38AA04WS	3/8-30	RCTFC38-30	E4.7	1/8 Wedgy23	E4.4	RCTFC12-30	E4.7	1/8 Swaged	E4.3	**670**
C38AA06WS		RCTFC38-30	E4.7	3/16 Wedgy45	E4.4	RCTFC12-30	E4.7	3/16 Swaged	E4.3	**1,320**
C38CF04WS		RCHWS38-30	F1.1	1/8 Wedgy23	E4.4	ABHWS12-30	F2.1	1/8 Swaged	E4.3	**670**
C38CF06WS		RCHWS38-30	F1.1	3/16 Wedgy45	E4.4	ABHWS12-30	F2.1	3/16 Swaged	E4.3	**780**
C12AA04WS	1/2-30	RCTFC12-30	E4.7	1/8 Wedgy23	E4.4	RCTFC12-30	E4.7	1/8 Swaged	E4.3	**670**
C12AA06WS		RCTFC12-30	E4.7	3/16 Wedgy45	E4.4	RCTFC12-30	E4.7	3/16 Swaged	E4.3	**1,470**
C12CF04WS		RCHWS12-30	F1.1	1/8 Wedgy23	E4.4	ABHWS12-30	F2.1	1/8 Swaged	E4.3	**670**
C12CF06WS		RCHWS12-30	F1.1	3/16 Wedgy45	E4.4	ABHWS12-30	F2.1	3/16 Swaged	E4.3	**780**
C12FF04WC		ABHWS12-30	F2.1	1/8 Wedgy23	E4.4	ABHWS12-30	F2.1	1/8 Cable Clip	E4.3	**670**
C12GG06CC		ABHWX12-30	F2	3/16 Cable Clip	E4.3	ABHWX12-30	F2	3/16 Cable Clip	E4.3	**1,570**
C12PF06CS		HBK3812-30	F1.6	3/16 Cable Clip	E4.3	ABHWS12-30	F2.1	3/16 Swaged	E4.3	**840**
C58AA04WS	5/8-30	RCTFC58-30	E4.7	1/8 Wedgy23	E4.4	RCTFC12-30	E4.7	1/8 Swaged	E4.3	**670**
C58AA06WS		RCTFC58-30	E4.7	3/16 Wedgy45	E4.4	RCTFC12-30	E4.7	3/16 Swaged	E4.3	**1,470**
C58CF04WS		RCHWS58-30	F1.1	1/8 Wedgy23	E4.4	ABHWS12-30	F2.1	1/8 Swaged	E4.3	**670**
C58DG06WS		RCHWX58-30	F1	3/16 Wedgy45	E4.4	ABHWX12-30	F2	3/16 Swaged	E4.3	**1,480**
C58DG06TS		RCHWX58-30	F1	3/16 Thru-Bolted	E4.2	ABHWX12-30	F2	3/16 Swaged	E4.3	**1,550**
C58PF06CS		HBK5834-30	F1.6	3/16 Cable Clip	E4.3	ABHWS12-30	F2.1	3/16 Swaged	E4.3	**840**
C34CF04WS	3/4-30	RCHWS34-30	F1.1	1/8 Wedgy23	E4.4	ABHWS12-30	F2.1	1/8 Swaged	E4.3	**670**
C34DG06WS		RCHWX34-30	F1	3/16 Wedgy45	E4.4	ABHWX12-30	F2	3/16 Swaged	E4.3	**1,480**
C34DG06TS		RCHWX34-30	F1	3/16 Thru-Bolted	E4.2	ABHWX12-30	F2	3/16 Swaged	E4.3	**1,550**
C34PF06CS		HBK5834-30	F1.6	3/16 Cable Clip	E4.3	ABHWS12-30	F2.1	3/16 Swaged	E4.3	**840**

1. See Page E0.1 for Nomenclature.
2. Nominal 30 +/- 5 Degrees Brace Angle Measured From Horizontal. Brace Force (P) Along Brace Arm.
3. Use of Any Non ISAT Bracket Voids Engineering.
4. The table above represents typical assemblies. Consult ISAT Engineering if alternate options are required.
5. See Page E4.2 for Rod Capture Cable Assembly - RCHW detail.
6. See Page E4.3 for Cable Clip Assembly detail.
7. See Page E4.4 for Wedgy Looped Assembly detail.
8. See Page E4.7 for Rod Capture Tuning Fork Cable Assembly - RCTFC detail.

REVIEWED FOR CODE COMPLIANCE
OPM-0403
By William Staehlin
DATE: 01-26-2024
CALIFORNIA BUILDING CODE, 2022

REGISTERED PROFESSIONAL ENGINEER
MARCIN WASAZNIK
S 6612
STRUCTURAL
STATE OF CALIFORNIA

ISAT
A Division of Tomarco Contractor Specialties

International Seismic Application Technology
14848 Northam Street, La Mirada, CA 90638
877-999-4728 (Toll Free) 714-523-0845 (fax)
www.isatsb.com

DIRECTORY - ISAT CABLE BRACE ASSEMBLIES[4] - 45°										
ISAT Brace Assembly [1]	Rod	Lower Connection[3]				Upper Connection[3]				Assembly Design Value [2], P (Lbs)
	Diameter (in)	Lower Bracket	Manual Page	Diameter & Connection Assembly Type	Manual Page	Upper Bracket	Manual Page	Diameter & Connection Assembly Type	Manual Page	
C38AA04WS	3/8	RCTFC38	E4.7	1/8 Wedgy23	E4.4	RCTFC12	E4.7	1/8 Swaged	E4.3	**670**
C38AA06WS		RCTFC38	E4.7	3/16 Wedgy45	E4.4	RCTFC12	E4.7	3/16 Swaged	E4.3	**1,360**
C38CF04WS		RCHWS38	F1.1	1/8 Wedgy23	E4.4	ABHWS12	F2.1	1/8 Swaged	E4.3	**670**
C38CF06WS		RCHWS38	F1.1	3/16 Wedgy45	E4.4	ABHWS12	F2.1	3/16 Swaged	E4.3	**1,360**
C12AA04WS	1/2	RCTFC12	E4.7	1/8 Wedgy23	E4.4	RCTFC12	E4.7	1/8 Swaged	E4.3	**670**
C12AA06WS		RCTFC12	E4.7	3/16 Wedgy45	E4.4	RCTFC12	E4.7	3/16 Swaged	E4.3	**1,480**
C12CF04WS		RCHWS12	F1.1	1/8 Wedgy23	E4.4	ABHWS12	F2.1	1/8 Swaged	E4.3	**670**
C12CF06WS		RCHWS12	F1.1	3/16 Wedgy45	E4.4	ABHWS12	F2.1	3/16 Swaged	E4.3	**1,480**
C12FF04WC		ABHWS12	F2.1	1/8 Wedgy23	E4.4	ABHWS12	F2.1	1/8 Cable Clip	E4.3	**670**
C12GG06CC		ABHWX12	F2	3/16 Cable Clip	E4.3	ABHWX12	F2	3/16 Cable Clip	E4.3	**2,650**
C12PF06CS		HBK3812	F1.6	3/16 Cable Clip	E4.3	ABHWS12	F2.1	3/16 Swaged	E4.3	**2,030**
C58AA04WS	5/8	RCTFC58	E4.7	1/8 Wedgy23	E4.4	RCTFC12	E4.7	1/8 Swaged	E4.3	**670**
C58AA06WS		RCTFC58	E4.7	3/16 Wedgy45	E4.4	RCTFC12	E4.7	3/16 Swaged	E4.3	**1,480**
C58CF04WS		RCHWS58	F1.1	1/8 Wedgy23	E4.4	ABHWS12	F2.1	1/8 Swaged	E4.3	**670**
C58DG06WS		RCHWX58	F1	3/16 Wedgy45	E4.4	ABHWX12	F2	3/16 Swaged	E4.3	**1,480**
C58DG06TS		RCHWX58	F1	3/16 Thru-Bolted	E4.2	ABHWX12	F2	3/16 Swaged	E4.3	**1,830**
C58PF06CS		HBK5834	F1.6	3/16 Cable Clip	E4.3	ABHWS12	F2.1	3/16 Swaged	E4.3	**1,860**
C34CF04WS	3/4	RCHWS34	F1.1	1/8 Wedgy23	E4.4	ABHWS12	F2.1	1/8 Swaged	E4.3	**670**
C34DG06WS		RCHWX34	F1	3/16 Wedgy45	E4.4	ABHWX12	F2	3/16 Swaged	E4.3	**1,480**
C34DG06TS		RCHWX34	F1	3/16 Thru-Bolted	E4.2	ABHWX12	F2	3/16 Swaged	E4.3	**1,830**
C34PF06CS		HBK5834	F1.6	3/16 Cable Clip	E4.3	ABHWS12	F2.1	3/16 Swaged	E4.3	**1,860**

1. See Page E0.1 for Nomenclature.
2. Nominal 45 +/- 5 Degrees Brace Angle Measured From Horizontal. Brace Force (P) Along Brace Arm.
3. Use of Any Non ISAT Bracket Voids Engineering.
4. The table above represents typical assemblies. Consult ISAT Engineering if alternate options are required.
5. See Page E4.2 for Rod Capture Cable Assembly - RCHW detail.
6. See Page E4.3 for Cable Clip Assembly detail.
7. See Page E4.4 for Wedgy Looped Assembly detail.
8. See Page E4.7 for Rod Capture Tuning Fork Cable Assembly - RCTFC detail.

ACCEPTED FOR COMPLIANCE
OPM-0403
BY: William Staehlin
DATE: 01-26-2024
CALIFORNIA BUILDING CODE 2022

REGISTERED PROFESSIONAL ENGINEER
MARCIN WASAZNIK
S-6612
STRUCTURAL
STATE OF CALIFORNIA

ISAT
A Division of Tomarco Contractor Specialties

International Seismic Application Technology
14848 Northam Street, La Mirada, CA 90638
877-999-4728 (Toll Free) 714-523-0845 (fax)
www.isatsb.com

DIRECTORY - ISAT CABLE BRACE ASSEMBLIES[4] - 60°										
ISAT Brace Assembly [1]	Rod	Lower Connection[3]				Upper Connection[3]				Assembly Design Value [2], P (Lbs)
	Diameter (in)	Lower Bracket	Manual Page	Diameter & Connection Assembly Type	Manual Page	Upper Bracket	Manual Page	Diameter & Connection Assembly Type	Manual Page	
C38AA04WS	3/8-60	RCTFC38-60	E4.7	1/8 Wedgy23	E4.4	RCTFC12-60	E4.7	1/8 Swaged	E4.3	**670**
C38AA06WS		RCTFC38-60	E4.7	3/16 Wedgy45	E4.4	RCTFC12-60	E4.7	3/16 Swaged	E4.3	**1,480**
C38CF04WS		RCHWS38-60	F1.1	1/8 Wedgy23	E4.4	ABHWS12-60	F2.1	1/8 Swaged	E4.3	**670**
C38CF06WS		RCHWS38-60	F1.1	3/16 Wedgy45	E4.4	ABHWS12-60	F2.1	3/16 Swaged	E4.3	**760**
C12AA04WS	1/2-60	RCTFC12-60	E4.7	1/8 Wedgy23	E4.4	RCTFC12-60	E4.7	1/8 Swaged	E4.3	**670**
C12AA06WS		RCTFC12-60	E4.7	3/16 Wedgy45	E4.4	RCTFC12-60	E4.7	3/16 Swaged	E4.3	**1,480**
C12CF04WS		RCHWS12-60	F1.1	1/8 Wedgy23	E4.4	ABHWS12-60	F2.1	1/8 Swaged	E4.3	**670**
C12CF06WS		RCHWS12-60	F1.1	3/16 Wedgy45	E4.4	ABHWS12-60	F2.1	3/16 Swaged	E4.3	**760**
C12FF04WC		ABHWS12-60	F2.1	1/8 Wedgy23	E4.4	ABHWS12-60	F2.1	1/8 Cable Clip	E4.3	**670**
C12GG06CC		ABHWX12-60	F2	3/16 Cable Clip	E4.3	ABHWX12-60	F2	3/16 Cable Clip	E4.3	**1,390**
C12PF06CC		HBK3812-60	F1.6	3/16 Cable Clip	E4.3	ABHWS12-60	F2.1	3/16 Cable Clip	E4.3	**1,050**
C58AA04WS	5/8-60	RCTFC58-60	E4.7	1/8 Wedgy23	E4.4	RCTFC12-60	E4.7	1/8 Swaged	E4.3	**670**
C58AA06WS		RCTFC58-60	E4.7	3/16 Wedgy45	E4.4	RCTFC12-60	E4.7	3/16 Swaged	E4.3	**1,480**
C58CF04WS		RCHWS58-60	F1.1	1/8 Wedgy23	E4.4	ABHWS12-60	F2.1	1/8 Swaged	E4.3	**670**
C58DG06WS		RCHWX58-60	F1	3/16 Wedgy45	E4.4	ABHWX12-60	F2	3/16 Swaged	E4.3	**1,390**
C58DG06TS		RCHWX58-60	F1	3/16 Thru-Bolted	E4.2	ABHWX12-60	F2	3/16 Swaged	E4.3	**1,390**
C58PF06CS		HBK5834-60	F1.6	3/16 Cable Clip	E4.3	ABHWS12-60	F2.1	3/16 Swaged	E4.3	**1,050**
C34CF04WS	3/4-60	RCHWS34-60	F1.1	1/8 Wedgy23	E4.4	ABHWS12-60	F2.1	1/8 Swaged	E4.3	**670**
C34DG06WS		RCHWX34-60	F1	3/16 Wedgy45	E4.4	ABHWX12-60	F2	3/16 Swaged	E4.3	**1,390**
C34DG06TS		RCHWX34-60	F1	3/16 Thru-Bolted	E4.2	ABHWX12-60	F2	3/16 Swaged	E4.3	**1,390**
C34PF06CS		HBK5834-60	F1.6	3/16 Cable Clip	E4.3	ABHWS12-60	F2.1	3/16 Swaged	E4.3	**1,050**

1. See Page E0.1 for Nomenclature.
2. Nominal 60 +/- 5 Degrees Brace Angle Measured From Horizontal. Brace Force (P) Along Brace Arm.
3. Use of Any Non ISAT Bracket Voids Engineering.
4. The table above represents typical assemblies. Consult ISAT Engineering if alternate options are required.
5. See Page E4.2 for Rod Capture Cable Assembly - RCHW detail.
6. See Page E4.3 for Cable Clip Assembly detail.
7. See Page E4.4 for Wedgy Looped Assembly detail.
8. See Page E4.7 for Rod Capture Tuning Fork Cable Assembly - RCTFC detail.

REVIEWED FOR CODE COMPLIANCE
OPM-0403
BY: William Staehlin
DATE: 01-26-2024
CALIFORNIA BUILDING CODE, 2022

REGISTERED PROFESSIONAL ENGINEER
MARCIN WASAZNIK
S 6612
STRUCTURAL
STATE OF CALIFORNIA

ISAT
A Division of Tomarco Contractor Specialties

International Seismic Application Technology
14848 Northam Street, La Mirada, CA 90638
877-999-4728 (Toll Free) 714-523-0845 (fax)
www.isatsb.com

UPPER CONNECTION OPTIONS
"DETAIL B"

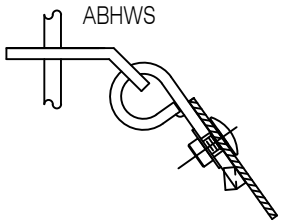

LOWER CONNECTION OPTIONS
"DETAIL A"

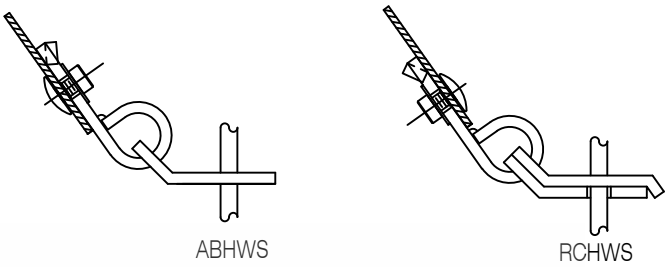

REFER TO NOTE 19, PAGE 4.2 FOR CABLE TENSIONING ON NON-VIBRATION ISOLATED INSTALLATIONS.

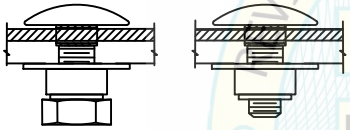

"TITE-END" TRUE TORQUE NUT
HEX NUT (NON-THREADED)
SHEARS OFF @ MINIMUM 55-FT-LBS.
NO TORQUE WRENCH REQ'D.

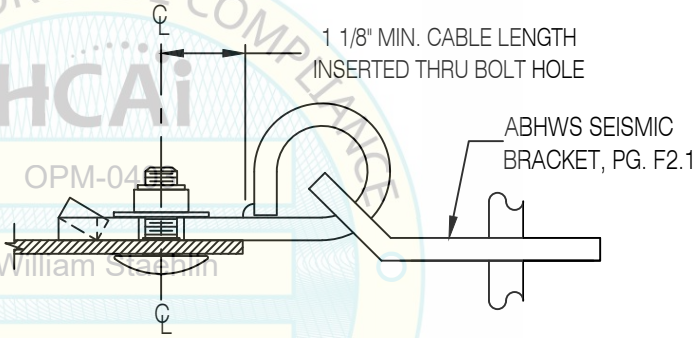

THRU BOLT CABLE TIE ASSEMBLY
DETAIL "B"

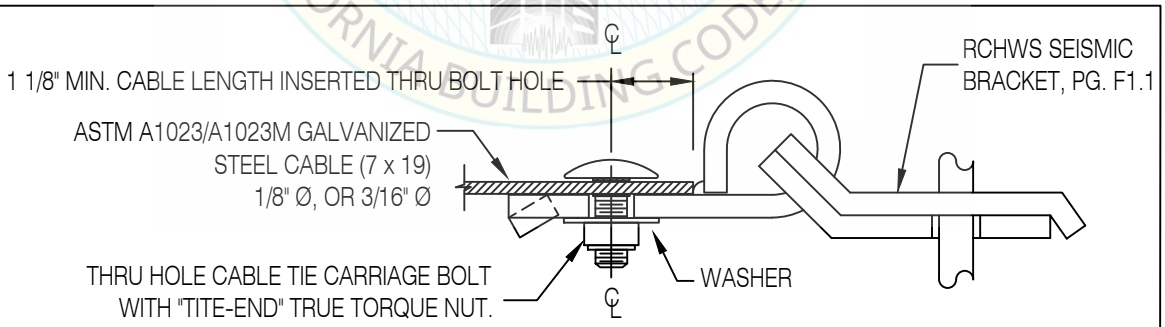

THRU BOLT CABLE TIE ASSEMBLY
DETAIL "A"

CABLE BRACING TO BE INSTALLED IN A SYMETRICAL PATTERN PER B-SERIES INSTALLATION DETAILS.

THRU BOLT CABLE TIE ASSEMBLY DETAILS

REGISTERED PROFESSIONAL ENGINEER
MARCIN WASAZNIK
S 6612
STRUCTURAL
STATE OF CALIFORNIA

ISAT
A Division of Tomarco Contractor Specialties
International Seismic Application Technology
14848 Northam Street, La Mirada, CA 90638
877-999-4728 (Toll Free) 714-523-0845 (fax)
www.isatsb.com

Rev. 3
07/26/18

Page
E4.2

REVIEWED FOR CODE COMPLIANCE
HCAi
OPM-0403
BY: William Staehlin
DATE: 01-26-2024
CALIFORNIA BUILDING CODE 2022

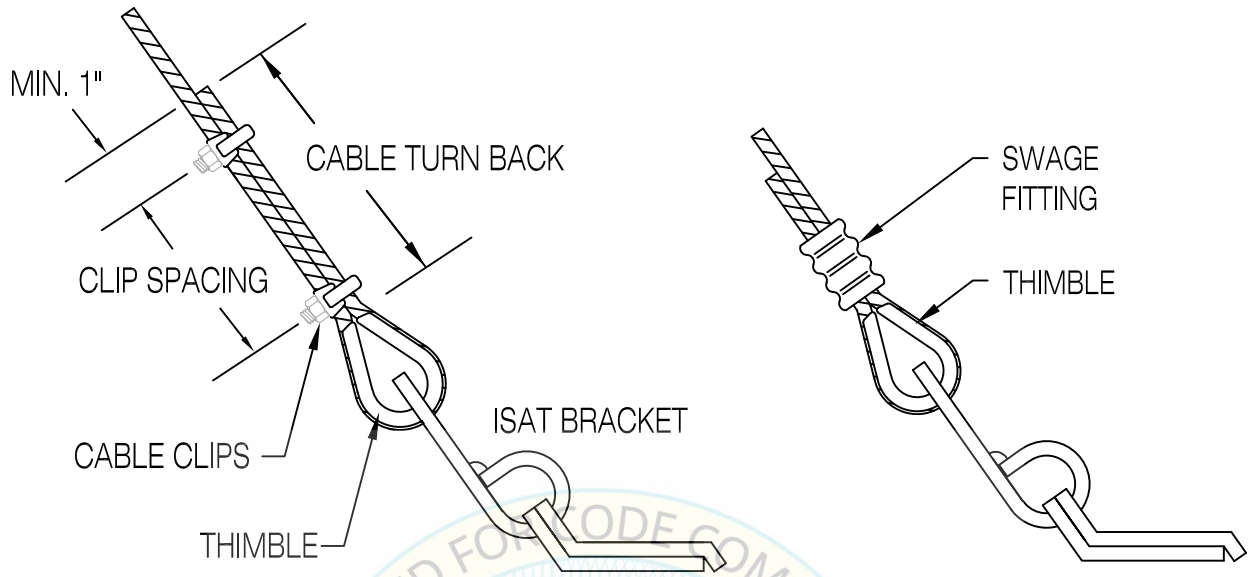

HCAi
OPM-0403
Dr. William Staehlin
DATE: 01-26-2024
REVIEWED FOR CODE COMPLIANCE
CALIFORNIA BUILDING CODE

Cable Diameter (in)	Cable Maximum Design Value (lbs)	Cable Clip Parameters		
		Minimum Turn Back (in)	Norminal Clip Spacing (in)	Cable Clip Nut Torque (ft - lbs)
1/8	667[1]	3 1/4	2 1/4	4.5
3/16	2650[2]	3 3/4	2 3/4	7.5
1/4	3170[2]	4 3/4	3 1/2	15
5/16	4000[2]	5 1/4	3 7/8	30

1. FACTOR OF SAFETY: 3.0
2. FACTOR OF SAFETY: 1.5
3. CABLE BRACING TO BE INSTALLED IN A SYMMETRICAL PATTERN PER B-SERIES INSTALLATION DETAILS.
4. EXCEPT FOR SYSTEMS SUSPENDED FROM SPRING HANGERS OR SYSTEMS WITH THERMAL EXPANSION OR CONTRACTION, TENSION CABLE TO REMOVE SLACK WITHOUT INDUCING UPLIFT OF THE COMPONENT.

CABLE CLIP ASSEMBLY

ISAT
A Division of Tomarco Contractor Specialties
International Seismic Application Technology
14848 Northam Street, La Mirada, CA 90638
877-999-4728 (Toll Free) 714-523-0845 (fax)
www.isatsb.com

Rev. 2
02/18/19

Page
E4.3

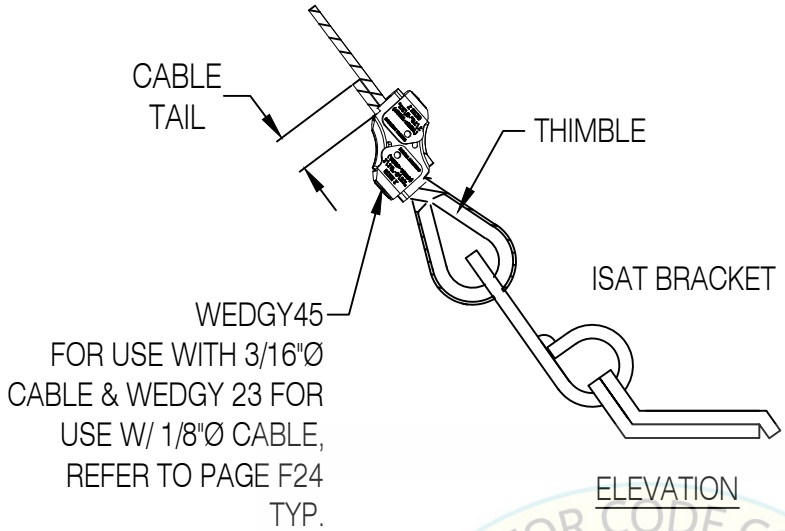

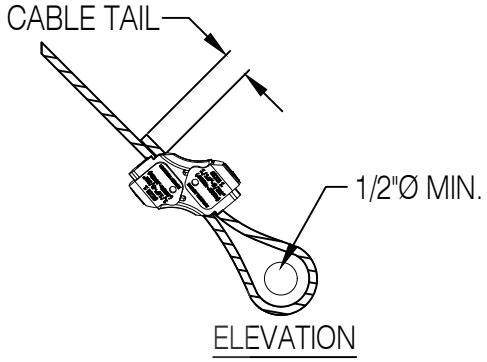

REVIEWED FOR CODE COMPLIANCE
HCAi
OPM-0403
BY: William Staehlin
DATE: 01-26-2024
CALIFORNIA BUILDING CODE, 2022

CABLE DIAMETER (in)	LOOP VALUES (in)	MINIMUM TAIL LENGTH (in)
1/8	770	3
3/16	1485	3

1. CABLE BRACING TO BE INSTALLED IN A SYMMETRICAL PATTERN PER B-SERIES INSTALLATION DETAILS
2. EXCEPT FOR SYSTEMS SUSPENDED FROM SPRING HANGERS OR SYSTEMS WITH THERMAL EXPANSION OR CONTRACTION, TENSION CABLE TO REMOVE SLACK WITHOUT INDUCING UPLIFT OF THE COMPONENT
3. FACTOR OF SAFETY: 1.5

WEDGY LOOPED ASSEMBLY

ISAT
A Division of Tomarco Contractor Specialties
International Seismic Application Technology
14848 Northam Street, La Mirada, CA 90638
877-999-4728 (Toll Free) 714-523-0845 (fax)
www.isatsb.com

Rev. 1
09/28/18

Page
E4.4

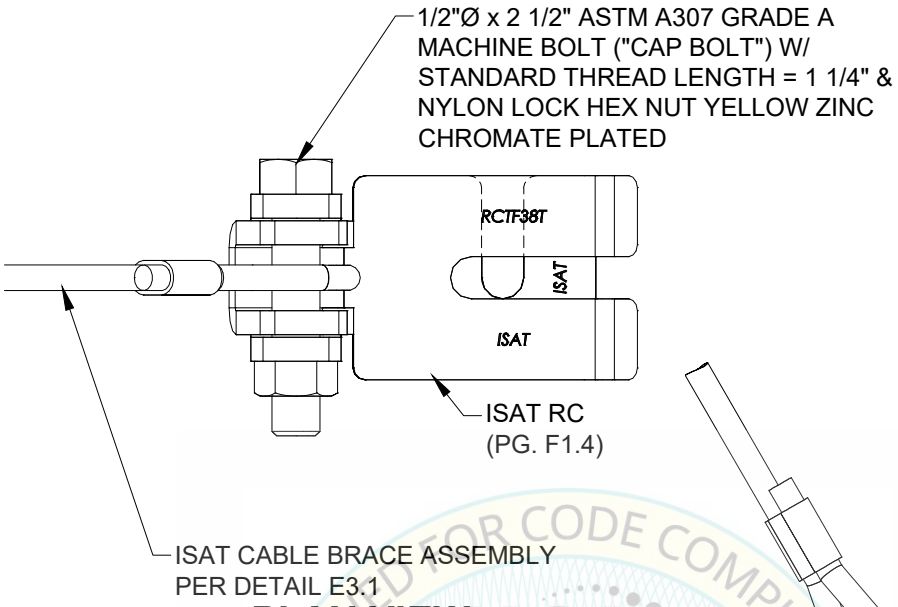

PLAN VIEW

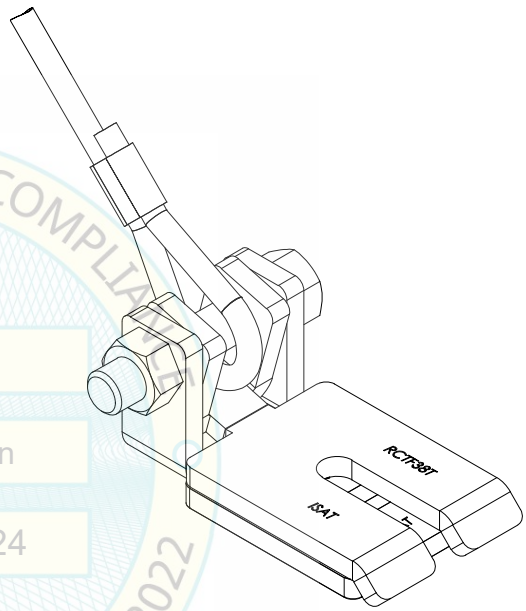

ISOMETRIC VIEW

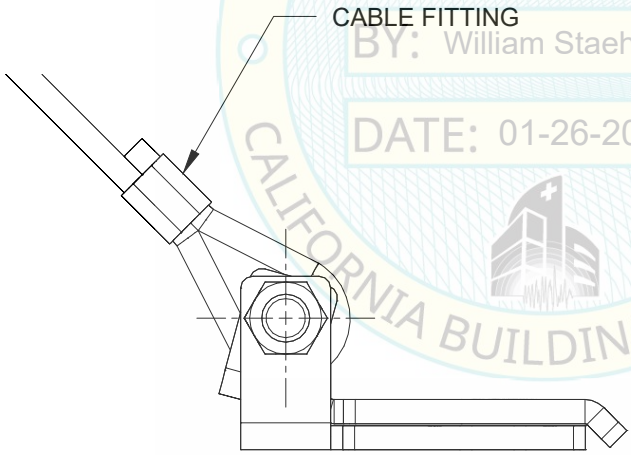

SIDE VIEW

REVIEWED FOR CODE COMPLIANCE
HCAi
OPM-0403
BY: William Staehlin
DATE: 01-26-2024
CALIFORNIA BUILDING CODE, 2022

ROD CAPTURE TUNING FORK (RCTFC) - CABLE ASSEMBLY

REGISTERED PROFESSIONAL ENGINEER
MARCIN WASAZNIK
S 6612
STRUCTURAL
STATE OF CALIFORNIA

ISAT
A Division of Tomarco Contractor Specialties

International Seismic Application Technology
14848 Northam Street, La Mirada, CA 90638
877-999-4728 (Toll Free) 714-523-0845 (fax)
www.isatsb.com

Rev. 0
10/11/19

Page
E4.7

INDEX - ISAT SEISMIC RESTRAINT HARDWARE

PAGE	DESCRIPTION
	1. SEISMIC BRACKETS
F1	ROD CAPTURE BRACKETS, HINGED, WELDED (RCHW)
F1.1	ROD CAPTURE BRACKETS, HINGED, WELDED, SHORT (RCHWS)
F1.3	SEISMIC TUNING FORK (STF) BRACKET
F1.4	ROD CAPTURE TUNING FORK (RCTF) BRACKET
F1.6	"HBK" TENSION ONLY ROD CAPTURE BRACKET
F2	ANCHOR BRACKETS, HINGED, WELDED (ABHW)
F2.1	ANCHOR BRACKETS, HINGED, WELDED, SHORT (ABHWS)
F2.2	ANCHOR BRACKET TUNING FORK (ABTF)
F2.3	ISAT TBA – TELESCOPING BRACE ARM
	2. *LONGITUDINAL RESTRAINT DEVICES (LRD)*
F7	LONGITUDINAL RESTRAINT DEVICE (LRD) – FOR USE WITH STEEL PIPE ≥ SCH 10 OR RMC CONDUIT
F7.1	LONGITUDINAL RESTRAINT DEVICE (LRD), WELDED LUG – FOR USE WITH STEEL PIPE ≥ SCH 40
F7.6	LONGITUDINAL RESTRAINT DEVICE WELDED BOLT (LRDWB) – FOR USE WITH STEEL PIPE ≥ SCH 10 OR RMC CONDUIT
F7.6.1	LONGITUDINAL RESTRAINT DEVICE WELDED BOLT (LRDWB)
F7.6.2	LONGITUDINAL RESTRAINT DEVICE WELDED BOLT (LRDWB), FOR USE WITH COPPER WITH GREENIE WRAP
F7.6.3	LONGITUDINAL RESTRAINT DEVICE WELDED BOLT (LRDWB), FOR USE WITH CAST IRON PIPING
F7.6.4	DUAL LONGITUDINAL RESTRAINT DEVICE WELDED BOLT (LRDWB), FOR USE WITH COPPER WITH GREENIE WRAP
F7.7.1	DUAL LONGITUDINAL RESTRAINT DEVICE (LRD) - FOR USE WITH STEEL PIPE ≥ SCH 10 OR RMC CONDUIT
F7.7.2	LONGITUDINAL RESTRAINT DEVICE (LRD) - FOR USE WITH COPPER WITH GREENIE WRAP
F7.7.4	DUAL LONGITUDINAL RESTRAINT DEVICE (LRD) - FOR USE WITH COPPER WITH GREENIE WRAP
F8	LRD SPLICE PLATE
	3. *PIPE/CONDUIT HANGER ACCESSORIES*
F8.1	BC-4U BEAM CLAMP ASSEMBLY
F8.2	BC-5 BEAM CLAMP ASSEMBLY
	4. *SEISMIC POURED-IN-PLACE "PIP" INSERT SERIES*
F10.0	PUSH ROD POURED-IN-PLACE INSERT - PRPIP3812
F10.0.1	PUSH ROD POURED-IN-PLACE INSERT - PRPIP3812 – WIDE BASE
F10.1	BBH POURED-IN-PLACE INSERT - PIP143812
F10.1.1	BBH POURED-IN-PLACE INSERT - PIP143812 – WIDE BASE
F10.2	BBH POURED-IN-PLACE INSERT - PIP381258
F10.2.1	BBH POURED-IN-PLACE INSERT - PIP381258 – WIDE BASE
F10.3	BBH POURED-IN-PLACE INSERT - PIP5834
F10.3.1	BBH POURED-IN-PLACE INSERT - PIP5834 – WIDE BASE
F10.4	POURED-IN-PLACE INSERT – PIPM38
	5. *SEISMIC STEEL DECK INSERT "SDI" SERIES*
F11.0	PUSH ROD STEEL DECK INSERT - PRSDI3812
F11.1	STEEL DECK INSERT - SDI143812
F11.2	STEEL DECK INSERT - SDI381258
F11.3	STEEL DECK INSERT - SDI5834
F12.1	FLUTE SPAN BRACKET (FSB-1)
F12.1.1	FLUTE SPAN BRACKET (FSB-X)
F12.2	FLUTE SPAN BRACKET (FSB-2)
	6. *GENERAL ISAT HARDWARE*
F13	BEAM WELDED LUG
F14	STRUT NUT RIGID BRACE ASSEMBLY
F15	4-BOLT H-BRACKET (HBRKT)
F17	4-BOLT ANCHOR PLATE, FORM POUR SLAB
F18	4-BOLT ANCHOR PLATE, METAL DECK SLAB
F20	WALL MOUNT BRACKETS (WMB) AND WALL MOUNTING PLATES (WMP)
F24	WEDGY23 & WEDGY45

HCAI
OPM-0403
BY: William Staehlin
01/26/2024
CALIFORNIA BUILDING CODE, 2022

REGISTERED PROFESSIONAL ENGINEER
MARCIN WASAZNIK
S 6612
STRUCTURAL
STATE OF CALIFORNIA

ISAT
A Division of Tomarco Contractor Specialties

International Seismic Application Technology
14848 Northam Street, La Mirada, CA 90638
877-999-4728 (Toll Free) 714-523-0845 (fax)
www.isatsb.com

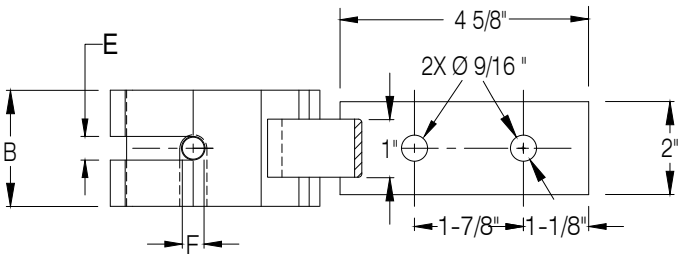

PLAN VIEW

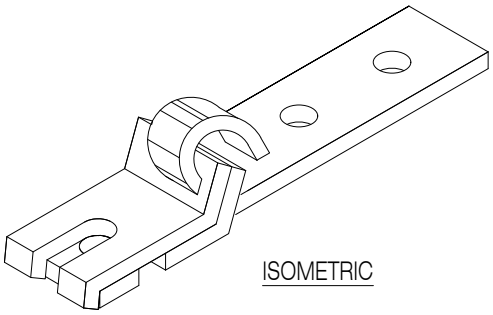

ISOMETRIC

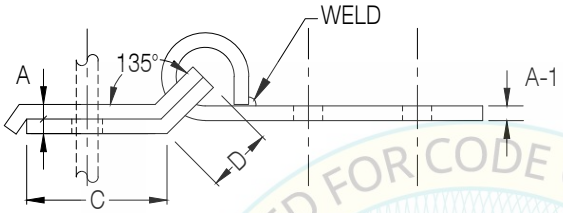

SIDE VIEW

REVIEWED FOR CODE COMPLIANCE
HCAi
OPM-0403
BY: William Staehlin
DATE: 01-26-2024
CALIFORNIA BUILDING CODE, 2022

BRACKET ALLOWABLE CAPACITY (LBS) FOR RIGID AND CABLE BRACING												
Type of Bracket	Rod Diameter (in)	Installation Angle From Horizontal			Wall Connection[3]	Dimensions (in)						
		0° - 30°	31° - 45°	46° - 60°	90°	A	A-1	B	C	D	E	F
RCHW12	1/2	1,025	2,290	800	695	3/16	1/4	2	2 5/16	1 1/16	9/16	17/32
RCHWX58	5/8	1,545	2,730	1,825	1,580	1/4	5/16	2 1/2	2 5/16	1 5/16	21/32	25/32
RCHWX34	3/4	1,545	2,730	1,825	1,580	1/4	5/16	2 1/2	2 5/16	1 5/16	25/32	25/32

1. Capacity of bracket based on seismic testing considering both tension and compression.
2. Factor of Safety = 2.0
3. At wall applications where the seismic load is parallel to the brace.

PATENT NO. 6,050,035

SEISMIC ROD CAPTURE BRACKETS, HINGED, WELDED (RCHW)

ISAT
A Division of Tomarco Contractor Specialties
International Seismic Application Technology
14848 Northam Street, La Mirada, CA 90638
877-999-4728 (Toll Free) 714-523-0845 (fax)
www.isatsb.com

Rev. 9
09/18/18

Page
F1

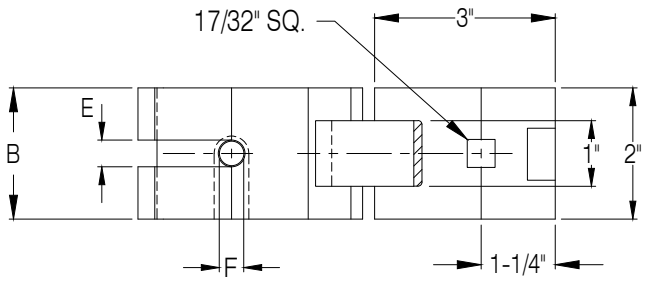

PLAN VIEW

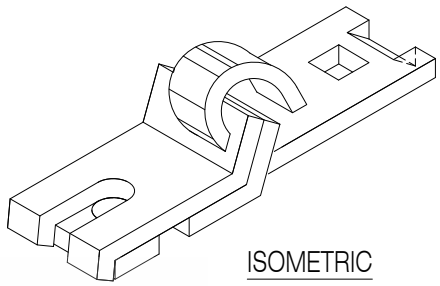

ISOMETRIC

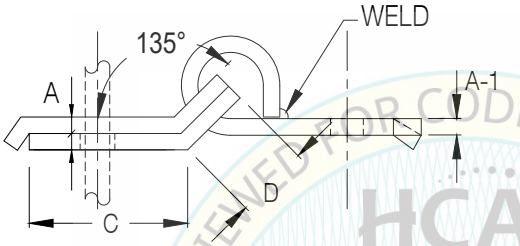

SIDE VIEW

REVIEWED FOR CODE COMPLIANCE
HCAi
OPM-0403
BY: William Staehlin
DATE: 01-26-2024
CALIFORNIA BUILDING CODE 2022

BRACKET ALLOWABLE CAPACITY (LBS) FOR RIGID AND CABLE BRACING												
Type of Bracket	Rod Diameter (in)	Installation Angle From Horizontal			Wall Connection[3]	Dimensions (in)						
		0° - 30°	31° - 45°	46° - 60°	90°	A	A-1	B	C	D	E	F
RCHWS38	3/8	775	2,085	760	660	3/16	1/4	2	2 5/16	1 1/16	7/16	17/32
RCHWS12	1/2	775	2,085	760	660	3/16	1/4	2	2 5/16	1 1/16	9/16	17/32
RCHWS58	5/8	895	1,685	870	755	1/4	1/4	2 1/2	2 5/16	1 5/16	21/32	25/32
RCHWS34	3/4	895	1,685	870	755	1/4	1/4	2 1/2	2 5/16	1 5/16	25/32	25/32

1. Capacity of bracket based on seismic testing considering both tension and compression.
2. Factor of Safety = 2.0
3. At wall applications where the seismic load is parallel to the brace.

PATENT NO. 6,050,035

ROD CAPTURE BRACKETS, HINGED, WELDED SHORT (RCHWS)

REGISTERED PROFESSIONAL ENGINEER
MARCIN WASAZNIK
S 6612
STRUCTURAL
STATE OF CALIFORNIA

ISAT
A Division of Tomarco Contractor Specialties
International Seismic Application Technology
14848 Northam Street, La Mirada, CA 90638
877-999-4728 (Toll Free) 714-523-0845 (fax)
www.isatsb.com

Rev. 9
09/18/18

Page
F1.1

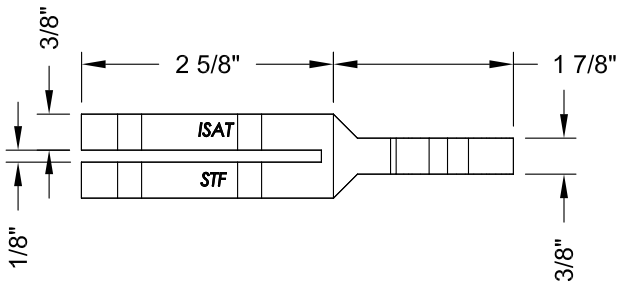

PLAN VIEW

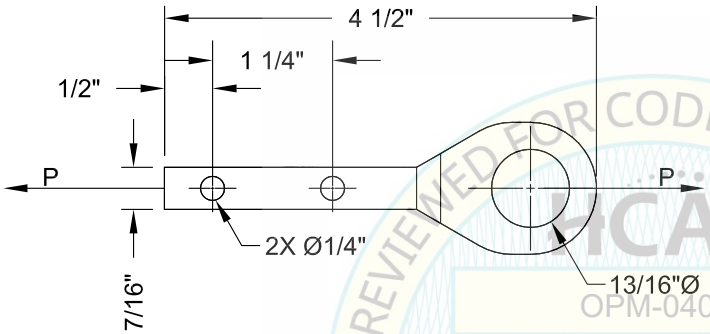

SIDE VIEW

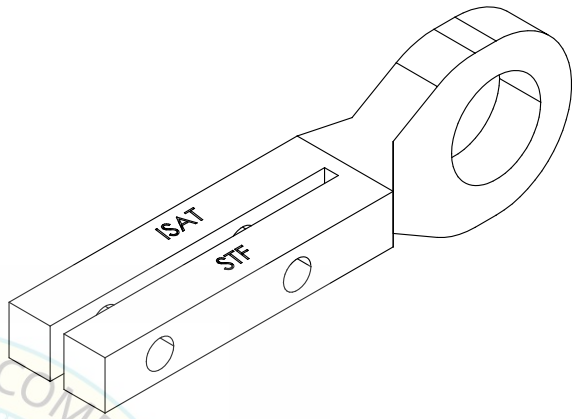

ISOMETRIC VIEW

REVIEWED FOR CODE COMPLIANCE
HCAi
OPM-0403
BY: William Staehlin
DATE: 01-26-2024
CALIFORNIA BUILDING CODE, 2022

Part Number	Tuning Fork Bracket Max. Axial Load, P (lbs)
STF	3,770

1. Factor of Safety: 1.5

MATERIAL: STEEL ASTM A-36

FINISH: ELECTRO-GALVANIZED

SEE H4 FOR SPACER

SEISMIC TUNING FORK (STF) BRACKET

REGISTERED PROFESSIONAL ENGINEER
MARCIN WASAZNIK
S 6612
STRUCTURAL
STATE OF CALIFORNIA

ISAT
A Division of Tomarco Contractor Specialties

International Seismic Application Technology
14848 Northam Street, La Mirada, CA 90638
877-999-4728 (Toll Free) 714-523-0845 (fax)
www.isatsb.com

Rev. 0
04/23/18

Page
F1.3

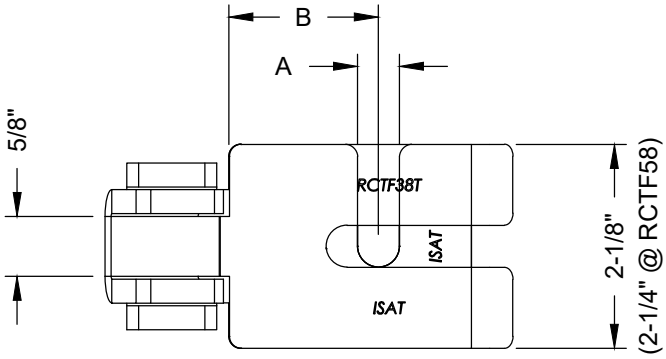

PLAN VIEW

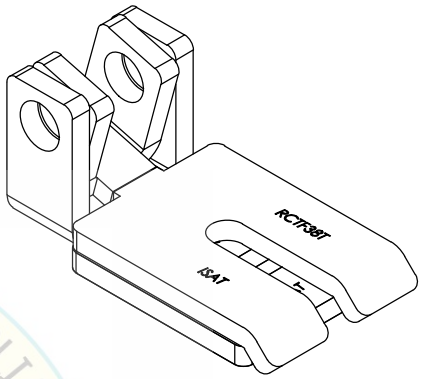

ISOMETRIC VIEW

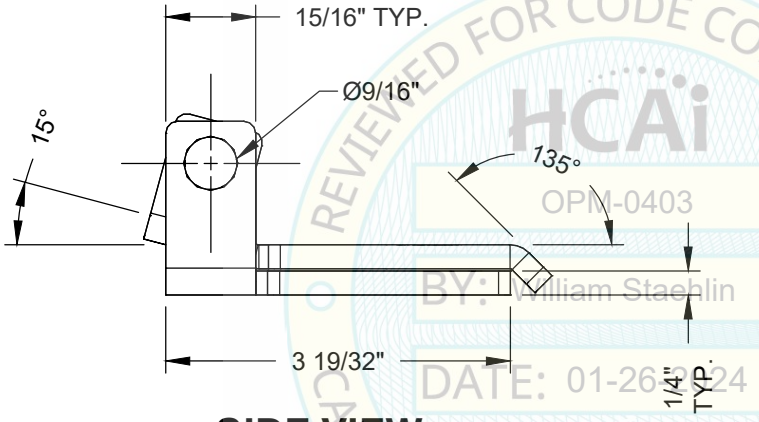

SIDE VIEW

REVIEWED FOR CODE COMPLIANCE
HCAi
OPM-0403
BY: William Staehlin
DATE: 01-26-2024
CALIFORNIA BUILDING CODE, 2022

BRACKET ALLOWABLE CAPACITY (LBS) FOR RIGID AND CABLE BRACING							
Type of Bracket	Rod Diameter (in)	Installation Angle From Horizontal			Wall Connection[3]	Dimensions (in)	
		0°-30°	31°-45°	46°-60°	90°	A	B
RCTF38	3/8	1,465	2,045	2,480	1,445	7/16	1 1/2
RCTF12	1/2	1,465	2,045	2,480	1,445	9/16	1 1/2
RCTF58	5/8	1,465	2,045	2,480	1,445	11/16	1 1/2

1. Capacity of bracket based on seismic testing considering both tension and compression.
2. Factor of Safety: 1.5
3. At wall applications where the seismic load is parallel to the brace.
4. Material: ASTM A36 Steel or Carbon Steel Gr. Q235, Finish: .0002" Min. Zinc Yellow Chromate, Type 2 Plating Per ASTM B633-85.

ROD CAPTURE TUNING FORK (RCTF) BRACKET

REGISTERED PROFESSIONAL ENGINEER
MARCIN WASAZNIK
S 6612
STRUCTURAL
STATE OF CALIFORNIA

ISAT
A Division of Tomarco Contractor Specialties
International Seismic Application Technology
14848 Northam Street, La Mirada, CA 90638
877-999-4728 (Toll Free) 714-523-0845 (fax)
www.isatsb.com

Rev. 0
02/04/19

Page
F1.4

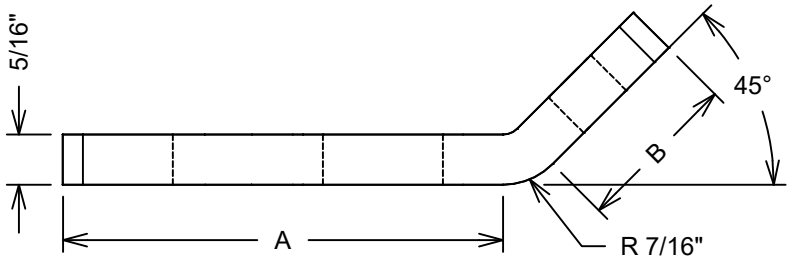

SIDE VIEW

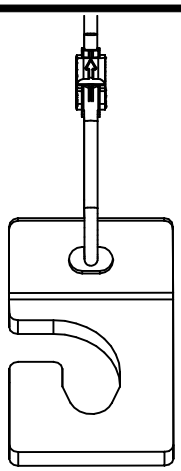

ISOMETRIC
SINGLE CABLE

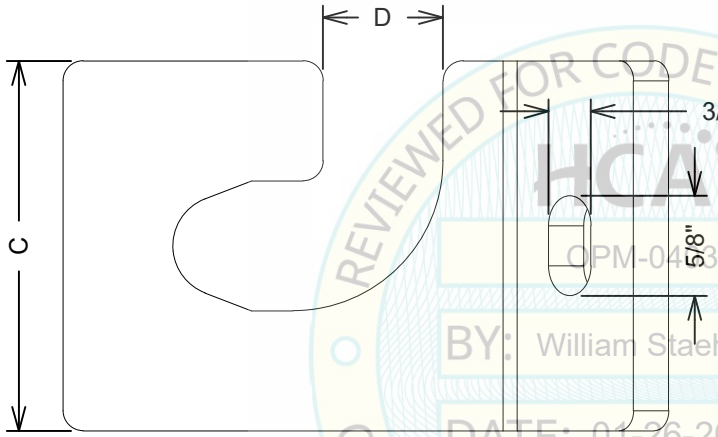

PLAN VIEW

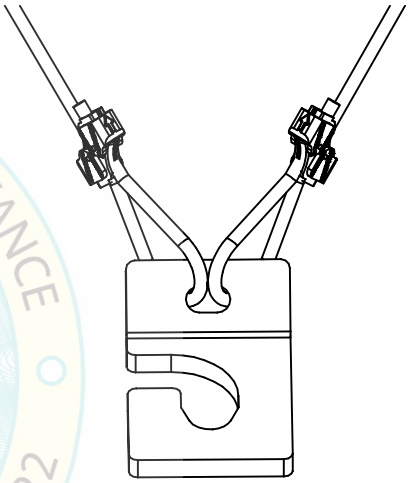

ISOMETRIC
SINGLE BRACKET SPLAY

REVIEWED FOR CODE COMPLIANCE
HCAi
OPM-0403
BY: William Staehlin
DATE: 01-26-2024
CALIFORNIA BUILDING CODE, 2022

BRACKET ALLOWABLE CAPACITY (LBS.) FOR CABLE BRACING ASD AXIAL DESIGN LOAD @ 45-DEGREE BRACE ANGLE						
PART #	ROD DIA. (IN.)	DESIGN VALUE (LBS.)	DIMENSION (IN.)			
			"A"	"B"	"C"	"D"
HBK-3812	3/8" OR 1/2"	1,845	2-5/32"	1-1/32"	2-1/16"	5/8"
HBK-5834	5/8" OR 3/4"	1,390	2-5/8"	1-1/32"	2-5/16"	3/4"

"HBK" TENSION ONLY ROD CAPTURE SEISMIC BRACKETS FOR ISAT CABLE TIE ASSEMBLIES

REGISTERED PROFESSIONAL ENGINEER
MARCIN WASAZNIK
S 6612
STRUCTURAL
STATE OF CALIFORNIA

ISAT
A Division of Tomarco Contractor Specialties

International Seismic Application Technology
14848 Northam Street, La Mirada, CA 90638
877-999-4728 (Toll Free) 714-523-0845 (fax)
www.isatsb.com

Rev. 0
06/28/23

Page
F1.6

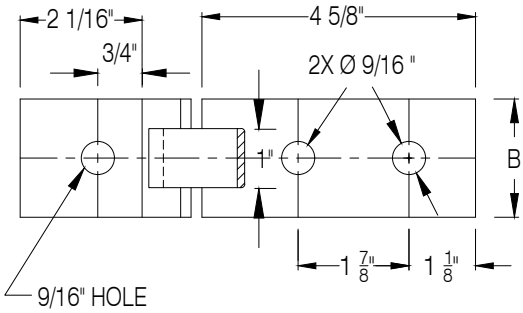

PLAN VIEW

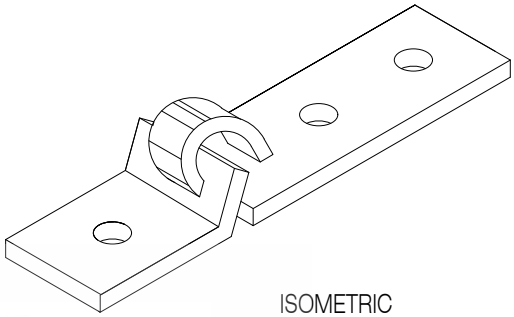

ISOMETRIC

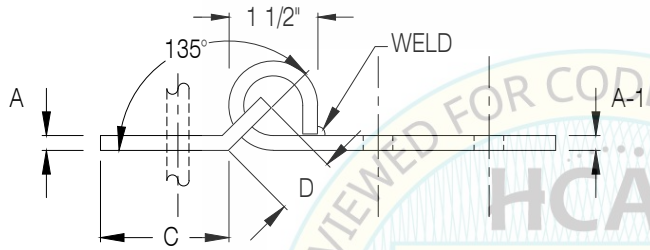

SIDE VIEW

REVIEWED FOR CODE COMPLIANCE
HCAi
OPM-0403
BY: William Staehlin
DATE: 01-26-2024
CALIFORNIA BUILDING CODE, 2022

BRACKET ALLOWABLE CAPACITY (LBS) FOR RIGID AND CABLE BRACING										
Type of Bracket	Rod Diameter (in)	Installation Angle From Horizontal			Wall Connection[3]	Dimensions (in)				
		0° - 30°	31° - 45°	46° - 60°	90°	A	A-1	B	C	D
ABHW12	1/2	1,430	2,220	1,065	920	5/16	1/4	2	2 5/16	1 1/16
ABHWX12	1/2	1,570	3,750	1,385	1,200	5/16	5/16	2	2 5/16	1 1/16

1. Capacity of bracket based on seismic testing considering both tension and compression.
2. Factor of Safety = 2.0
3. At wall applications where the seismic load is parallel to the brace.

PATENT NO. 6,050,035

ANCHOR BRACKETS, HINGED, WELDED (ABHW)

ISAT
A Division of Tomarco Contractor Specialties
International Seismic Application Technology
14848 Northam Street, La Mirada, CA 90638
877-999-4728 (Toll Free) 714-523-0845 (fax)
www.isatsb.com

Rev. 9
09/18/18

Page
F2

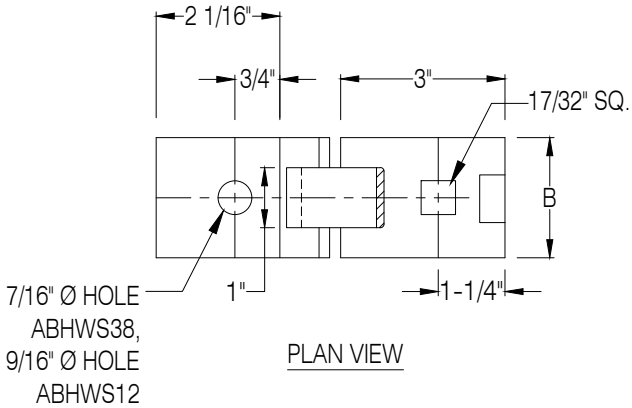

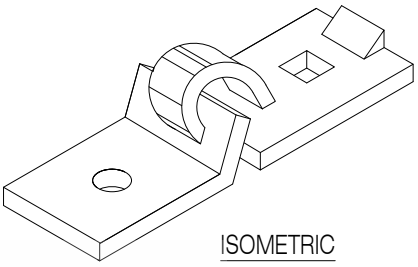

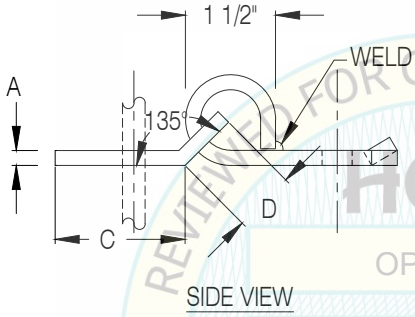

REVIEWED FOR CODE COMPLIANCE
HCAi
OPM-0403
BY: William Staehlin
DATE: 01-26-2024
CALIFORNIA BUILDING CODE, 2022

BRACKET ALLOWABLE CAPACITY (LBS) FOR RIGID AND CABLE BRACING										
Type of Bracket	Rod Diameter (in)	Installation Angle From Horizontal			Wall Connection[3]	Dimensions (in)				
		0° - 30°	31° - 45°	46° - 60°	90°	A	A-1	B	C	D
ABHWS12	1/2	840	2,030	1,045	905	5/16	1/4	2	2 5/16	1 1/16
ABHWS38	3/8	840	2,030	1,045	905	5/16	1/4	2	2 5/16	1 1/16

1. Capacity of bracket based on seismic testing considering both tension and compression.
2. Factor of Safety = 2.0
3. At w all applications w here the seismic load is parallel to the brace.

PATENT NO. 6,050,035

ANCHOR BRACKETS, HINGED, WELDED SHORT (ABHWS)

ISAT
A Division of Tomarco Contractor Specialties
International Seismic Application Technology
14848 Northam Street, La Mirada, CA 90638
877-999-4728 (Toll Free) 714-523-0845 (fax)
www.isatsb.com

Rev. 9
09/18/18

Page
F2.1

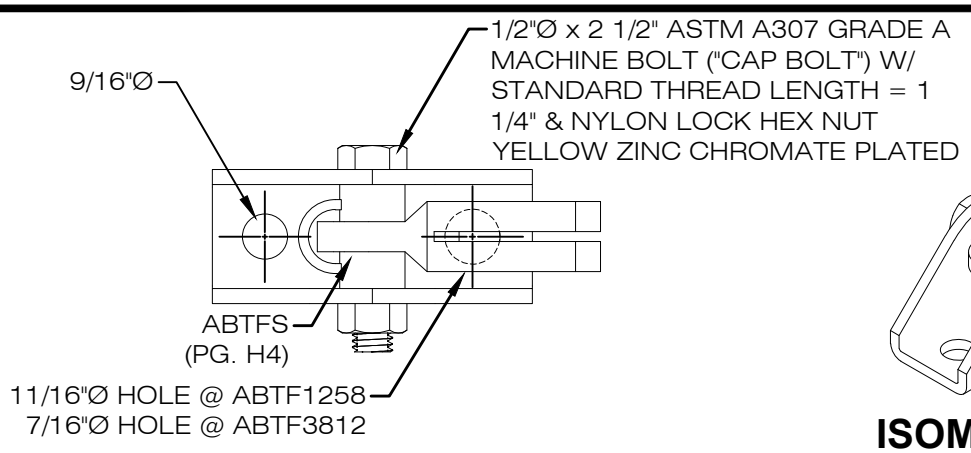

PLAN VIEW

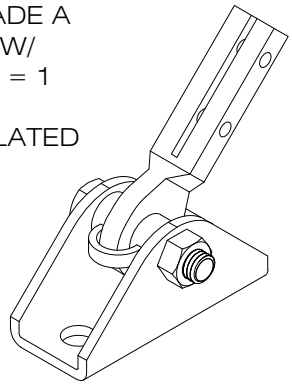

ISOMETRIC VIEW

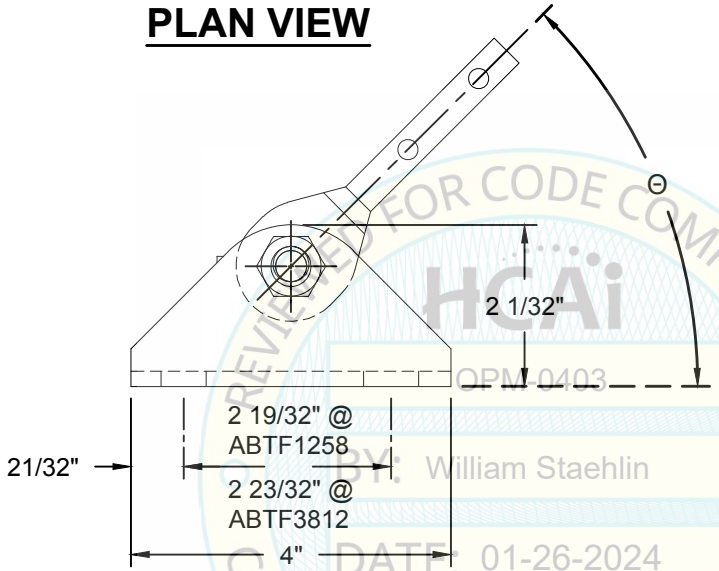

FRONT VIEW

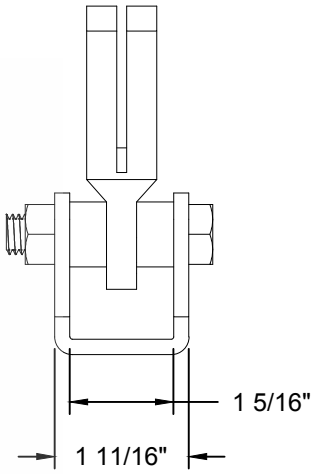

SIDE VIEW

REVIEWED FOR CODE COMPLIANCE
HCAi
OPM-0403
BY: William Staehlin
DATE: 01-26-2024
CALIFORNIA BUILDING CODE, 2022

INCORRECT INSTALLATION

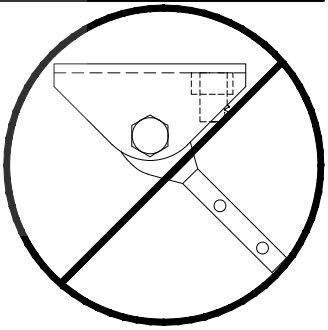

DO NOT INSTALL WITH BRACE ARM CROSSING OVER BOLTED/THREADED CONNECTION

FINISH: 0.0002" MIN. ZINC YELLOW CHROMATE, TYPE 2 PLATING PER ASTM B633-85

BRACKET TYPE	ANCHOR SIZE	ALLOWABLE BRACE ARM CAPACITY (lbs)			
		30°	45°	60°	90°
ABTF3812	3/8" (USE 7/16" HOLE)	1,961	1,908	1,868	1,912
	1/2" (USE 9/16" HOLE)				
ABTF1258	1/2" (USE 9/16" HOLE)	1,835	2,105	1,983	1,594
	5/8" (USE 11/16" HOLE)				

1. CAPACITY OF BRACKET BASED ON SEISMIC TESTING CONSIDERING BOTH TENSION AND COMPRESSION.

ANCHOR BRACKET TUNING FORK (ABTF)

REGISTERED PROFESSIONAL ENGINEER
MARCIN WASAZNIK
S 6612
STRUCTURAL
STATE OF CALIFORNIA

ISAT
A Division of Tomarco Contractor Specialties
International Seismic Application Technology
14848 Northam Street, La Mirada, CA 90638
877-999-4728 (Toll Free) 714-523-0845 (fax)
www.isatsb.com

DATE: 01/02/2024

PAGE: **F2.2**

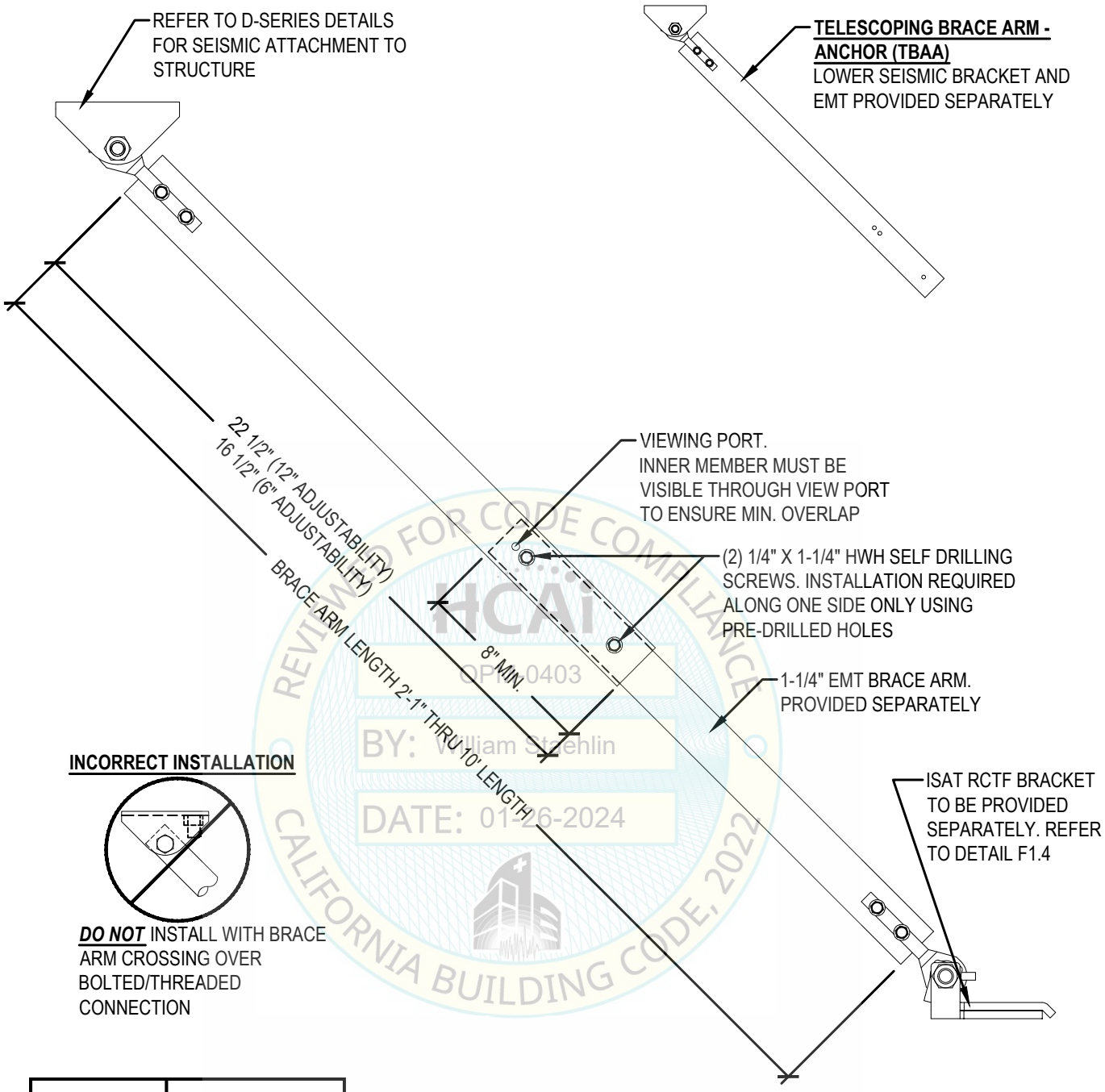

INCORRECT INSTALLATION

DO NOT INSTALL WITH BRACE ARM CROSSING OVER BOLTED/THREADED CONNECTION

BRACE ARM LENGTH	BRACE ARM CAPACITY (LBS)
7' OR LESS	1114
8'	955
9'	789
10'	661

PART #	ANCHOR SIZE	ADJUSTABILITY
TBAA-3812-6	3/8" OR 1/2"	6"
TBAA-3812-12	3/8" OR 1/2"	12"
TBAA-1258-6	1/2" OR 5/8"	6"
TBAA-1258-12	1/2" OR 5/8"	12"

ISAT TBAA -TELESCOPING BRACE ARM - ANCHOR

REGISTERED PROFESSIONAL ENGINEER MARCIN WASAZNIK S-6612 STRUCTURAL STATE OF CALIFORNIA

ISAT TOTAL SUPPORT
A Division of Tomarco Contractor Specialties

International Seismic Application Technology
14848 Northam Street,
La Mirada, CA 90638
877-999-4728 (Toll Free)
714-523-0845 (fax)
www.isatsb.com

CODES
APPLIES TO ALL CODES

DATE:
09/05/23

PAGE:
F2.3

REVIEWED FOR CODE COMPLIANCE
HCAi
OPM 0403
BY: William Stachlin
DATE: 01-26-2024
CALIFORNIA BUILDING CODE, 2022

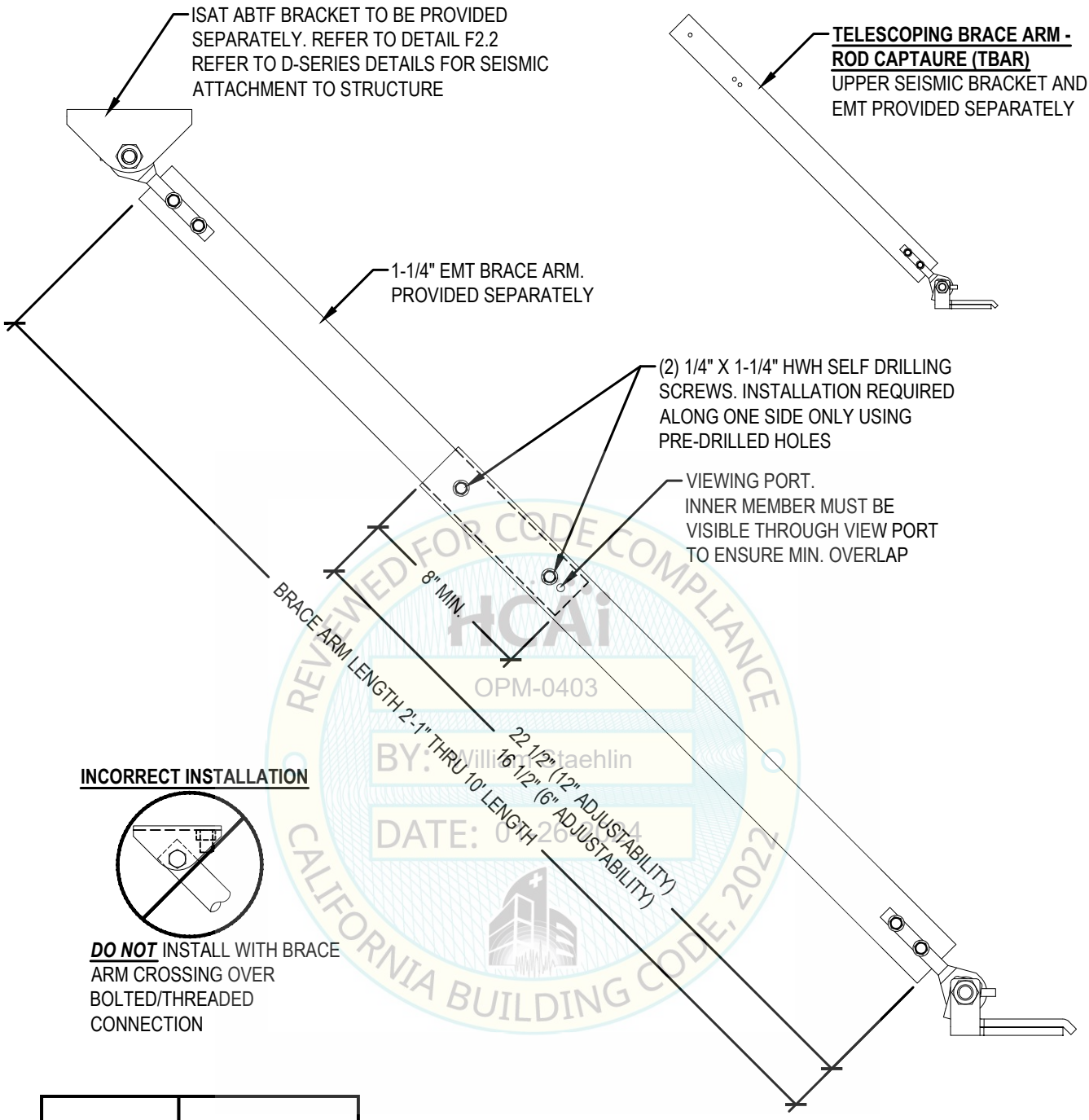

REVIEWED FOR CODE COMPLIANCE
HCAi
OPM-0403
BY: William Staehlin
DATE: 01/26/2024
CALIFORNIA BUILDING CODE, 2022

BRACE ARM LENGTH	BRACE ARM CAPACITY (LBS)
7' OR LESS	1114
8'	955
9'	789
10'	661

PART #	ROD SIZE	ADJUSTABILITY
TBAR-38-6	3/8"	6"
TBAR-38-12	3/8"	12"
TBAR-12-6	1/2"	6"
TBAR-12-12	1/2"	12"
TBAR-58-6	5/8"	6"
TBAR-58-12	5/8"	12"

ISAT TBAR -TELESCOPING BRACE ARM - ROD CAPTURE

REGISTERED PROFESSIONAL ENGINEER MARCIN WASAZNIK S-6612 STRUCTURAL STATE OF CALIFORNIA

ISAT TOTAL SUPPORT
A Division of Tomarco Contractor Specialties
International Seismic Application Technology
14848 Northam Street,
La Mirada, CA 90638
877-999-4728 (Toll Free)
714-523-0845 (fax)
www.isatsb.com

CODES
APPLIES TO ALL CODES

DATE:
09/05/23

PAGE:
F2.4

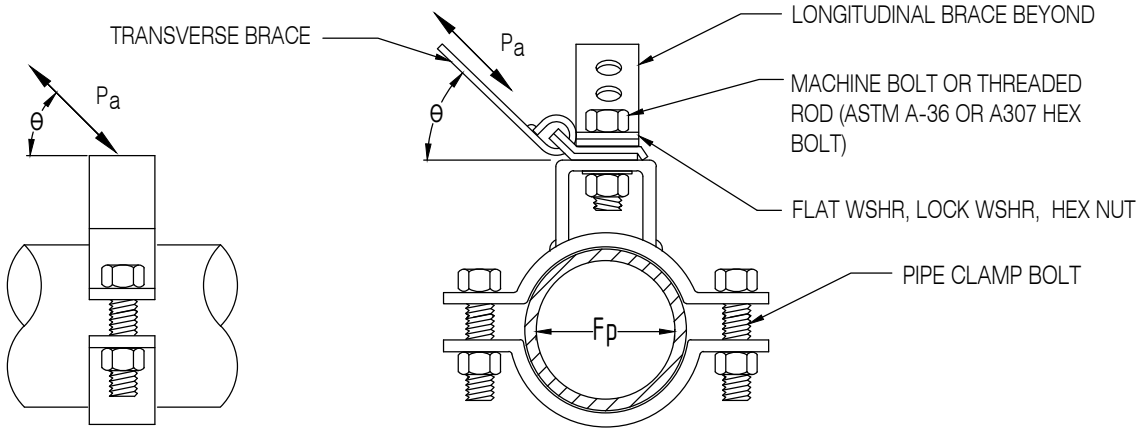

SIDE

FRONT

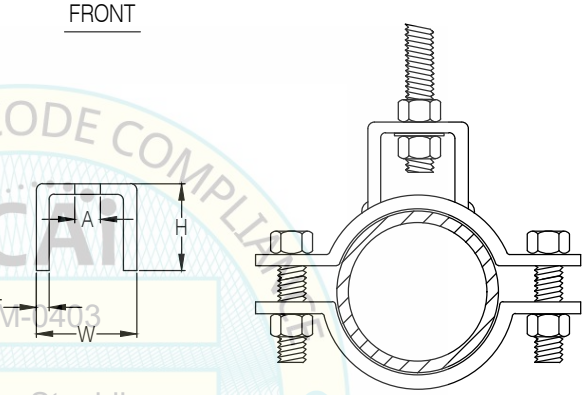

ALT. VERTICAL SUPPORT ONLY

Part Number	W (in)	H (in)	T (in)
LRD1.25~LRD5	1 3/4	2 7/8	0.22
LRD6	3	3 1/4	0.38
LRD8	3	4 1/4	0.38

REVIEWED FOR CODE COMPLIANCE
HCAI
OPM-0403
BY: William Staehlin
DATE: 01-26-2024
CALIFORNIA BUILDING CODE 2022

Part Number	Pipe Dia. Inch	Pipe Clamp		"A"		Maximum Design Load (ASD)					
						θ = 0° - 41° [3]		θ = 42° - 48° [3]		θ = 49° - 60° [3]	
		Bolt Size (in)	Bolt Torque (ft-lbs)	Top Mounting Bolt Diameter (in)	Alternate Vertical Support Rod Dia. (in)	Transverse Pa (lbs)	Longitudinal Pa (lbs)	Transverse Pa (lbs)	Longitudinal Pa (lbs)	Transverse Pa (lbs)	Longitudinal Pa (lbs)
LRD1.25	1 1/4	3/8	19	3/8	3/8	305	270	410	365	465	410
LDR1.5	1 1/2	3/8	19	3/8	3/8	325	310	435	415	495	475
LRD2	2	1/2	50	3/8	3/8	400	480	540	645	610	730
LRD2.5	2 1/2	1/2	50	1/2	1/2	555	655	745	880	845	1,000
LRD3	3	3/4	65	1/2	1/2	650	1,070	875	1,440	990	1,630
LRD4	4	7/8	65	5/8	5/8	860	1,255	1,155	1,690	1,310	1,915
LRD5	5	7/8	65	5/8	5/8	1,035	1,185	1,395	1,595	1,580	1,805
LRD6	6	1	75	5/8	5/8	1,215	1,380	1,635	1,855	1,850	2,105
LRD8	8	1	75	5/8	5/8	1,055	540	1,420	725	1,610	825

1. CONFORMS TO FEDERAL SPECIFICATION WWH-171E, TYPE 1 AND MSS SP-58 TYPE 4.
2. FOR USE WITH STEEL PIPE ≥ SCHD 10. ALSO FOR USE WITH RMC CONDUIT.
3. INSTALLATION ANGLE FROM HORIZONTAL.
4. FACTOR OF SAFETY = 2.0

LONGITUDINAL RESTRAINT DEVICE (LRD) - FOR USE WITH STEEL PIPE ≥ SCH 10 OR RMC CONDUIT

REGISTERED PROFESSIONAL ENGINEER MARCIN WASAZNIK S 6612 STRUCTURAL STATE OF CALIFORNIA

ISAT
A Division of Tomarco Contractor Specialties
International Seismic Application Technology
14848 Northam Street, La Mirada, CA 90638
877-999-4728 (Toll Free) 714-523-0845 (fax)
www.isatsb.com

Rev. 9
12/05/18

Page
F7

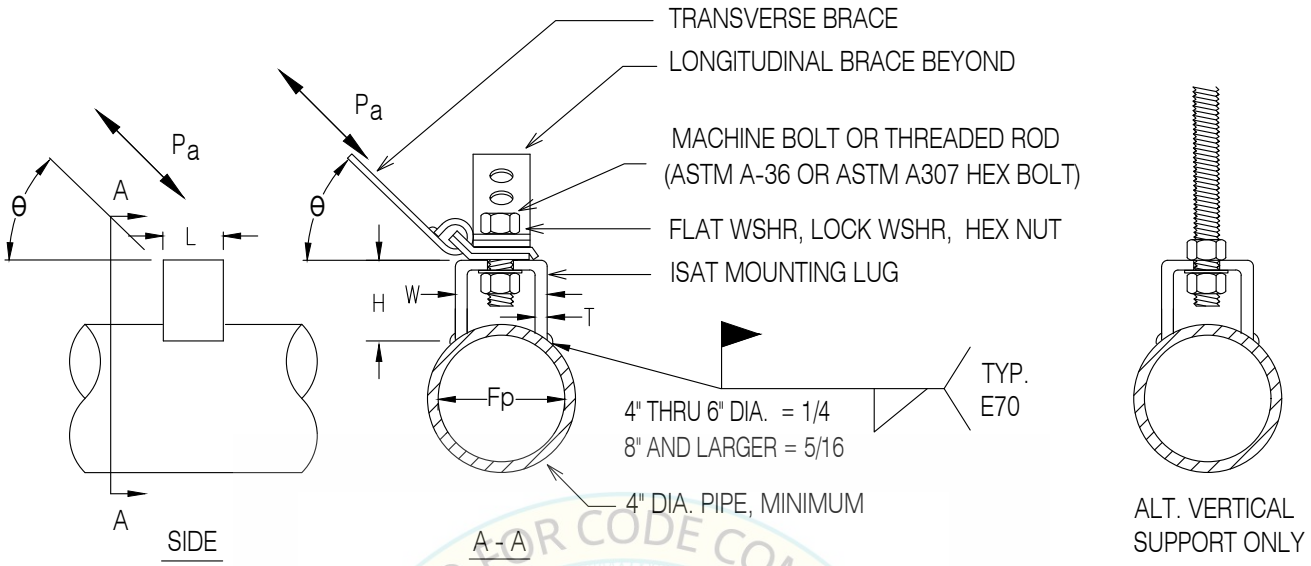

REVIEWED FOR CODE COMPLIANCE
HCAi
OPM-0403
BY: William Staehlin
DATE: 01-26-2024
CALIFORNIA BUILDING CODE, 2022

Pipe [1] Diameter	Top Mounting Bolt Diameter (in)	Alt. [2, 3] Vertical Support Rod Dia. (in)	Mounting Lug Part Number	Maximum Brace Reaction (ASD)						Height "H" (in)	Length "L" (in)	Thickness "T" (in)	Width "W" (in)
				θ = 0° - 30° [4]		θ = 31° - 45° [4]		θ = 46° - 60° [4]					
				Transverse Pa (lbs)	Longitudinal Pa (lbs)	Transverse Pa (lbs)	Longitudinal Pa (lbs)	Transverse Pa (lbs)	Longitudinal Pa (lbs)				
4 and 5"	5/8	5/8	LUGS	1,190	2,540	1,345	2,605	1,660	2,870	3	2 1/2	0.364	3
6 and 8"	5/8	3/4	LUGL	1,795	3,360	2,100	3,600	2,640	4,185	4 1/2	3	1/2	3 3/4
10 and 12"	5/8	7/8											
14 and 16"	5/8	1											
18 thru 24"	5/8	1 1/4"											

1. Minimum Sched. 40 steel.
2. Field drill-out to Vertical Support Rod Diameter +1/16" (except 5/8")
3. For vertical support connections, pipe sizes larger than 8" require either 1) a separate vertical support Mounting Lug or 2) a separate bolt-on LRD (F7) in addition to the Mounting Lug above utilized for brace arm connections to the pipe.
4. Installation Angle from Horizontal.

LONGITUDINAL RESTRAINT DEVICE (LRD) & VERTICAL SUPPORT
ALTERNATE WELDED LUG CONNECTION

REGISTERED PROFESSIONAL ENGINEER
MARCIN WASAZNIK
S 6612
STRUCTURAL
STATE OF CALIFORNIA

ISAT
A Division of Tomarco Contractor Specialties
International Seismic Application Technology
14848 Northam Street, La Mirada, CA 90638
877-999-4728 (Toll Free) 714-523-0845 (fax)
www.isatsb.com

Rev. 9
08/03/18

Page
F7.1

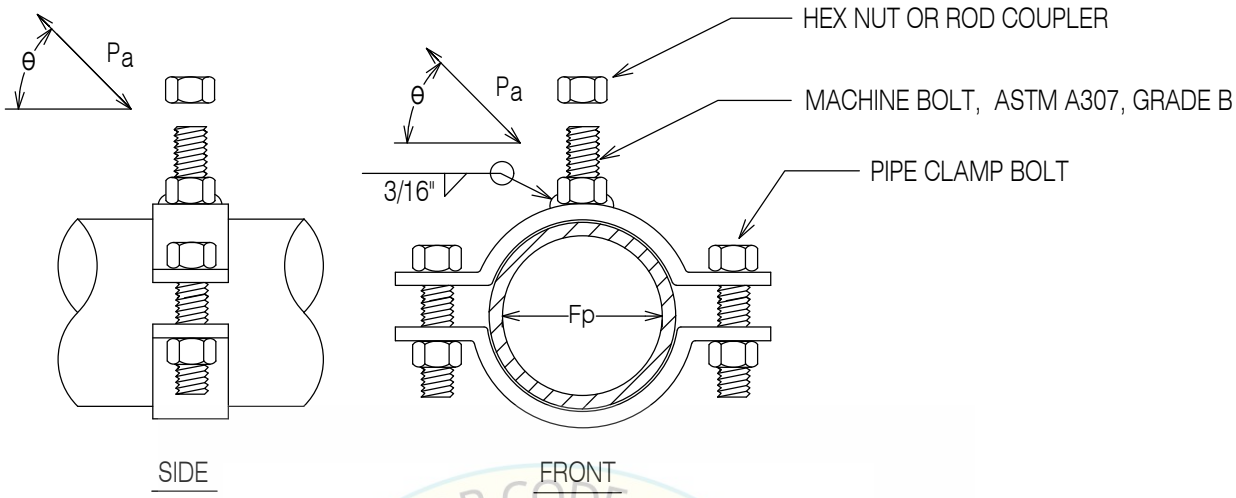

REVIEWED FOR CODE COMPLIANCE
HCAi
OPM-0403
BY: William Staehlin
DATE: 01-26-2024
CALIFORNIA BUILDING CODE 2022

Part Number	Pipe Diameter (in)	Pipe Clamp		Machine Bolt Diameter (in)	Maximum Design Load (ASD)					
					θ = 0° - 41° [3]		θ = 42° - 48° [3]		θ = 49° - 60° [3]	
		Bolt Size (in)	Bolt Torque (ft-lbs)		Transverse P_a (lbs)	Longitudinal P_a (lbs)	Transverse P_a (lbs)	Longitudinal P_a (lbs)	Transverse P_a (lbs)	Longitudinal P_a (lbs)
LRDWB1.25	1 1/4	3/8	19	3/8	485	480	655	645	740	730
LDRWB1.5	1 1/2	3/8	19	3/8	520	515	700	695	795	785
LRDWB2	2	1/2	50	3/8	555	930	745	1,250	845	1,420
LRDWB2.5	2 1/2	1/2	50	1/2	1,030	790	1,385	1,065	1,570	1,205
LRDWB3	3	1/2	50	1/2	1,230	1,120	1,655	1,505	1,875	1,705
LRDWB4	4	5/8	65	5/8	1,215	1,280	1,635	1,720	1,850	1,950
LRDWB5	5	5/8	65	5/8	1,210	1,505	1,630	2,025	1,845	2,295
LRDWB6	6	3/4	65	5/8	1,545	1,365	2,080	1,835	2,355	2,080
LRDWB8	8	3/4	65	5/8	1,545	1,015	2,080	1,365	2,355	1,545

1. CONFORMS TO FEDERAL SPECIFICATION WWH-171E, TYPE 1 AND MSS SP-58 TYPE 4.
2. FOR USE WITH STEEL PIPE ≥ SCHD 10. ALSO FOR USE WITH RMC CONDUIT.
3. INSTALLATION ANGLE FROM HORIZONTAL.
4. FACTOR OF SAFETY = 2.0

LONGITUDINAL RESTRAINT DEVICE WELDED BOLT (LRDWB) - FOR USE WITH STEEL PIPE ≥ SCH 10 OR RMC CONDUIT

REGISTERED PROFESSIONAL ENGINEER
MARCIN WASAZNIK
S 6612
STRUCTURAL
STATE OF CALIFORNIA

ISAT
A Division of Tomarco Contractor Specialties
International Seismic Application Technology
14848 Northam Street, La Mirada, CA 90638
877-999-4728 (Toll Free) 714-523-0845 (fax)
www.isatsb.com

Rev. 9
11/30/18

Page
F7.6

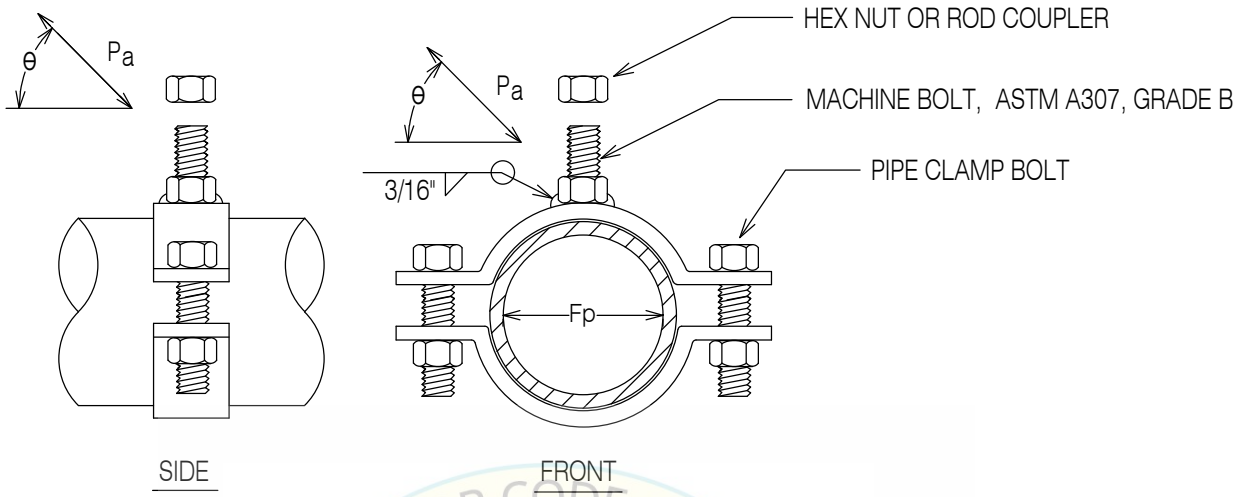

REVIEWED FOR CODE COMPLIANCE
HCAi
OPM-0403
BY: William Staehlin
DATE: 01-26-2024
CALIFORNIA BUILDING CODE 2022

Part Number	Pipe Diameter (in)	Pipe Clamp		Machine Bolt Diameter (in)	Maximum Design Load (ASD)					
					θ = 0° - 41° [3]		θ = 42° - 48° [3]		θ = 49° - 60° [3]	
		Bolt Size (in)	Bolt Torque (ft-lbs)		Transverse P_a (lbs)	Longitudinal P_a (lbs)	Transverse P_a (lbs)	Longitudinal P_a (lbs)	Transverse P_a (lbs)	Longitudinal P_a (lbs)
LRDWB3	3	1/2	50	1/2	910	910	1,225	1,225	1,385	1,385
LRDWB4	4	5/8	65	5/8	1,295	955	1,745	1,285	1,975	1,455

1. CONFORMS TO FEDERAL SPECIFICATION WWH-171E, TYPE 1 AND MSS SP-58 TYPE 4.
2. FOR USE WITH EMT.
3. INSTALLATION ANGLE FROM HORIZONTAL.
4. FACTOR OF SAFETY = 2.0

LONGITUDINAL RESTRAINT DEVICE WELDED BOLT (LRDWB) - FOR USE WITH EMT

A Division of Tomarco Contractor Specialties
International Seismic Application Technology
14848 Northam Street, La Mirada, CA 90638
877-999-4728 (Toll Free) 714-523-0845 (fax)
www.isatsb.com

Rev. 1
11/30/18

Page
F7.6.1

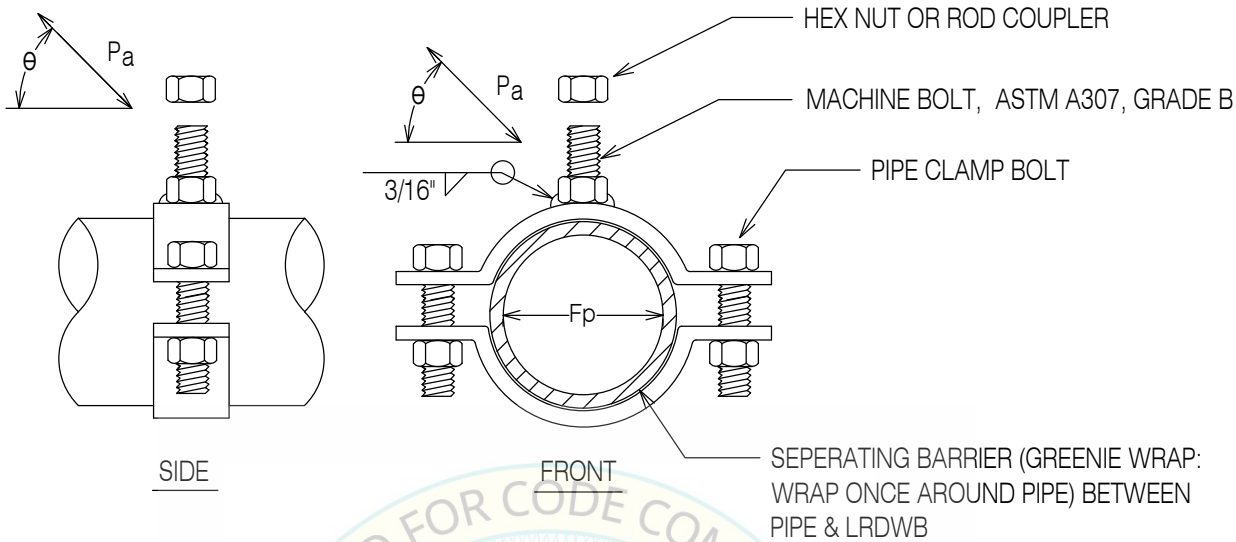

Part Number	Pipe Diameter (in)	Pipe Clamp		Machine Bolt Diameter (in)	Maximum Design Load (ASD)					
					θ = 0° - 41° [3]		θ = 42° - 48° [3]		θ = 49° - 60° [3]	
		Bolt Size (in)	Bolt Torque (ft-lbs)		Transverse P_a (lbs)	Longitudinal P_a (lbs)	Transverse P_a (lbs)	Longitudinal P_a (lbs)	Transverse P_a (lbs)	Longitudinal P_a (lbs)
LRDWB1.25	1 1/4	3/8	19	3/8	445	50	600	65	680	75
LDRWB1.5	1 1/2	3/8	19	3/8	310	100	415	135	475	150
LRDWB2	2	1/2	19	3/8	330	555	445	745	505	845
LRDWB2.5	2 1/2	1/2	50	1/2	665	655	895	880	1,015	1,000
LRDWB3	3	1/2	50	1/2	625	375	840	505	955	570
LRDWB3.5	3 1/2	1/2	50	1/2	625	375	840	505	955	570
LRDWB4	4	5/8	55	5/8	1,030	685	1,385	920	1,570	1,045
LRDWB5	5	5/8	55	5/8	720	565	970	760	1,095	860
LRDWB6	6	3/4	55	5/8	570	325	765	435	870	495

1. CONFORMS TO FEDERAL SPECIFICATION WWH-171E, TYPE 1 AND MSS SP-58 TYPE 4.
2. FOR USE WITH COPPER; SEPERATING BARRIER (GREENIE WRAP) BETWEEN PIPE & LRDWB.
3. INSTALLATION ANGLE FROM HORIZONTAL.
4. FACTOR OF SAFETY = 2.0

REVIEWED FOR CODE COMPLIANCE
HCAi
OPM-0403
BY: William Staehlin
DATE: 01-26-2024
CALIFORNIA BUILDING CODE, 2022

LONGITUDINAL RESTRAINT DEVICE WELDED BOLT (LRDWB) - FOR USE WITH COPPER WITH GREENIE WRAP

REGISTERED PROFESSIONAL ENGINEER
MARCIN WASAZNIK
S 6612
STRUCTURAL
STATE OF CALIFORNIA

ISAT
A Division of Tomarco Contractor Specialties

International Seismic Application Technology
14848 Northam Street, La Mirada, CA 90638
877-999-4728 (Toll Free) 714-523-0845 (fax)
www.isatsb.com

Rev. 1
11/30/18

Page
F7.6.2

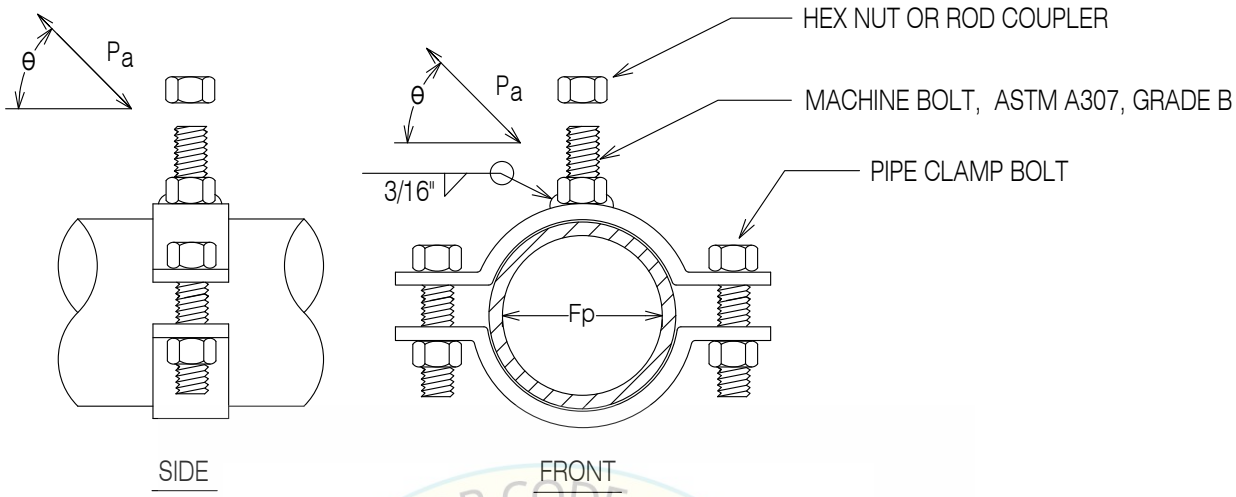

REVIEWED FOR CODE COMPLIANCE
HCAi
OPM-0403
BY: William Staehlin
DATE: 01-26-2024
CALIFORNIA BUILDING CODE 2022

Part Number	Pipe Diameter (in)	Pipe Clamp		Machine Bolt Diameter (in)	Maximum Design Load (ASD)					
					θ = 0° - 41° [3]		θ = 42° - 48° [3]		θ = 49° - 60° [3]	
		Bolt Size (in)	Bolt Torque (ft-lbs)		Transverse P_a (lbs)	Longitudinal P_a (lbs)	Transverse P_a (lbs)	Longitudinal P_a (lbs)	Transverse P_a (lbs)	Longitudinal P_a (lbs)
LRDWB2	2	1/2	50	3/8	285	1,025	385	1,380	435	1,560
LRDWB3	3	1/2	50	1/2	545	1,235	735	1,660	830	1,880
LRDWB4	4	5/8	65	5/8	760	1,310	1,025	1,765	1,160	1,995
LRDWB5	5	5/8	65	5/8	780	1,570	1,050	2,115	1,190	2,395
LRDWB6	6	3/4	65	5/8	660	1,510	890	2,030	1,005	2,300
LRDWB8[5]	8	3/4	75	5/8	1,125	1,292	1,515	1,740	1,715	1,970
LRDWB10[5]	10	7/8	95	5/8	1,247	1,083	1,680	1,455	1,900	1,650
LRDWB12[5]	12	7/8	95	5/8	695	943	935	1,270	1,060	1,435

1. CONFORMS TO FEDERAL SPECIFICATION WWH-171E, TYPE 1 AND MSS SP-58 TYPE 4.
2. FOR USE WITH CAST IRON.
3. INSTALLATION ANGLE FROM HORIZONTAL.
4. FACTOR OF SAFETY = 2.0
5. FACTOR OF SAFETY = 1.5

LONGITUDINAL RESTRAINT DEVICE WELDED BOLT (LRDWB) - FOR USE WITH CAST IRON PIPING

REGISTERED PROFESSIONAL ENGINEER
MARCIN WASAZNIK
S 6612
STRUCTURAL
STATE OF CALIFORNIA

ISAT
A Division of Tomarco Contractor Specialties
International Seismic Application Technology
14848 Northam Street, La Mirada, CA 90638
877-999-4728 (Toll Free) 714-523-0845 (fax)
www.isatsb.com

Rev. 2
08/13/19

Page
F7.6.3

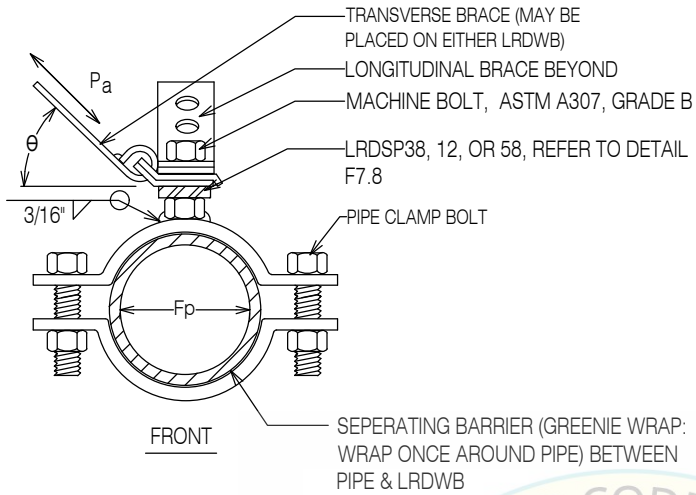

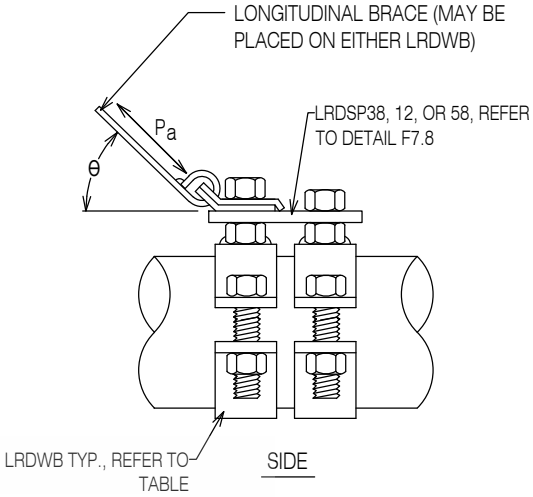

REVIEWED FOR CODE COMPLIANCE
HCAi
OPM-0403
BY: William Staehlin
DATE: 01-26-2024
CALIFORNIA BUILDING CODE 2022

LRDWB Part Number	Splice Plate Part Number	Pipe Diameter (in)	Pipe Clamp		Machine Bolt Diameter (in)	Maximum Design Load (ASD)					
						θ = 0° - 41° [3]		θ = 42° - 48° [3]		θ = 49° - 60° [3]	
			Bolt Size (in)	Bolt Torque (ft-lbs)		Transverse P_a (lbs)	Longitudinal P_a (lbs)	Transverse P_a (lbs)	Longitudinal P_a (lbs)	Transverse P_a (lbs)	Longitudinal P_a (lbs)
2LRDWB1.25	LRDSP38	1 1/4	3/8	19	3/8	445	100	600	130	680	150
2LDRWB1.5	LRDSP38	1 1/2	3/8	19	3/8	310	200	415	270	475	300
2LRDWB2	LRDSP12	2	1/2	19	3/8	330	1,110	445	1,490	505	1,690
2LRDWB2.5	LRDSP12	2 1/2	1/2	50	1/2	665	1,310	895	1,760	1,015	2,000
2LRDWB3	LRDSP12	3	1/2	50	1/2	625	750	840	1,010	955	1,140
2LRDWB3.5	LRDSP12	3 1/2	1/2	50	1/2	625	750	840	1,010	955	1,140
2LRDWB4	LRDSP58	4	5/8	55	5/8	1,030	1,370	1,385	1,840	1,570	2,090
2LRDWB5	LRDSP58	5	5/8	55	5/8	720	1,130	970	1,520	1,095	1,720
2LRDWB6	LRDSP34	6	3/4	55	5/8	570	650	765	870	870	990

1. CONFORMS TO FEDERAL SPECIFICATION WWH-171E, TYPE 1 AND MSS SP-58 TYPE 4.
2. FOR USE WITH COPPER; SEPERATING BARRIER (GREENIE WRAP) BETWEEN PIPE & LRDWB.
3. INSTALLATION ANGLE FROM HORIZONTAL.
4. FACTOR OF SAFETY = 2.0

DUAL LONGITUDINAL RESTRAINT DEVICE
WELDED BOLT (LRDWB)
FOR USE WITH COPPER WITH GREENIE WRAP

REGISTERED PROFESSIONAL ENGINEER
MARCIN WASAZNIK
S 6612
STRUCTURAL
STATE OF CALIFORNIA

ISAT
A Division of Tomarco Contractor Specialties
International Seismic Application Technology
14848 Northam Street, La Mirada, CA 90638
877-999-4728 (Toll Free) 714-523-0845 (fax)
www.isatsb.com

Rev. 0
12/04/18

Page
F7.6.4

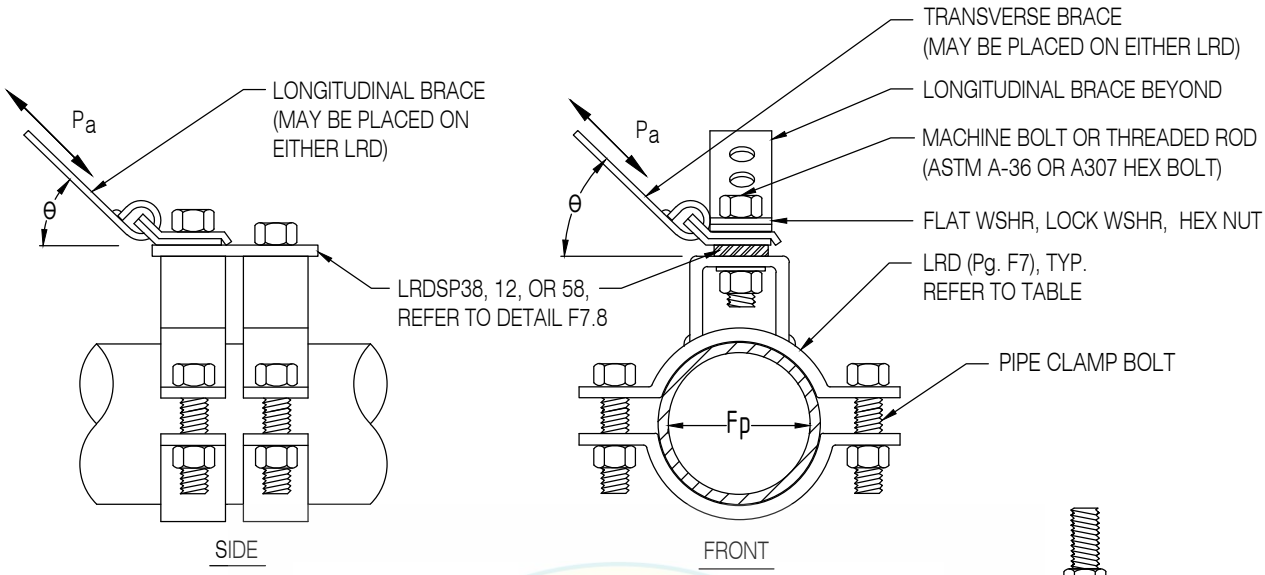

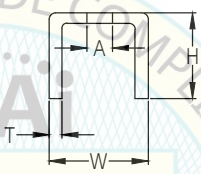

Part Number	W (in)	H (in)	T (in)
LRD1.25~LRD5	1 3/4	2 7/8	0.22
LRD6	3	3 1/4	0.38
LRD8	3	4 1/4	0.38

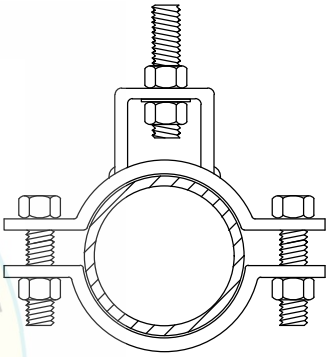

VERTICAL SUPPORT ONLY

REVIEWED FOR CODE COMPLIANCE
HCAi
OPM-0403
BY: William Staehlin
DATE: 01-26-2024
CALIFORNIA BUILDING CODE 2022

Part Number	Pipe Dia. (in)	Pipe Clamp		"A" (HOLE DIA = BOLT/ROD + 1/16")		Maximum Design Load (ASD) θ = 0° - 41° [3]		θ = 42° - 48° [3]		θ = 49° - 60° [3]	
		Bolt Size (in)	Bolt Torque (ft-lbs)	Top Mounting Bolt Diameter (in)	Alternate Vertical Support Rod Dia. (in)	Transverse Pa (lbs)	Longitudinal Pa (lbs)	Transverse Pa (lbs)	Longitudinal Pa (lbs)	Transverse Pa (lbs)	Longitudinal Pa (lbs)
LRD1.25	1 1/4	3/8	19	3/8	3/8	305	540	410	730	465	820
LRD1.5	1 1/2	3/8	19	3/8	3/8	325	620	435	830	495	950
LRD2	2	1/2	50	3/8	3/8	400	960	540	1,290	610	1,460
LRD2.5	2 1/2	1/2	50	1/2	1/2	555	1,310	745	1,760	845	2,000
LRD3	3	3/4	65	1/2	1/2	650	2,140	875	2,880	990	3,260
LRD4	4	7/8	65	5/8	5/8	860	2,510	1,155	3,380	1,310	3,830
LRD5	5	7/8	65	5/8	5/8	1,035	2,370	1,395	3,190	1,580	3,610
LRD6	6	1	75	5/8	5/8	1,215	2,760	1,635	3,710	1,850	4,210
LRD8	8	1	75	5/8	5/8	1,055	1,080	1,420	1,450	1,610	1,650

1. CONFORMS TO FEDERAL SPECIFICATION WWH-171E, TYPE 1 AND MSS SP-58 TYPE 4.
2. FOR USE WITH STEEL PIPE ≥ SCHD 10. ALSO FOR USE WITH RMC CONDUIT.
3. INSTALLATION ANGLE FROM HORIZONTAL.
4. FACTOR OF SAFETY = 2.0

DUAL LONGITUDINAL RESTRAINT DEVICE (LRD) - FOR USE WITH STEEL PIPE ≥ SCH 10 OR RMC CONDUIT

REGISTERED PROFESSIONAL ENGINEER MARCIN WASAZNIK S-6612 STRUCTURAL STATE OF CALIFORNIA

ISAT
A Division of Tomarco Contractor Specialties
International Seismic Application Technology
14848 Northam Street, La Mirada, CA 90638
877-999-4728 (Toll Free) 714-523-0845 (fax)
www.isatsb.com

Rev. 1
08/31/23

Page
F7.7.1

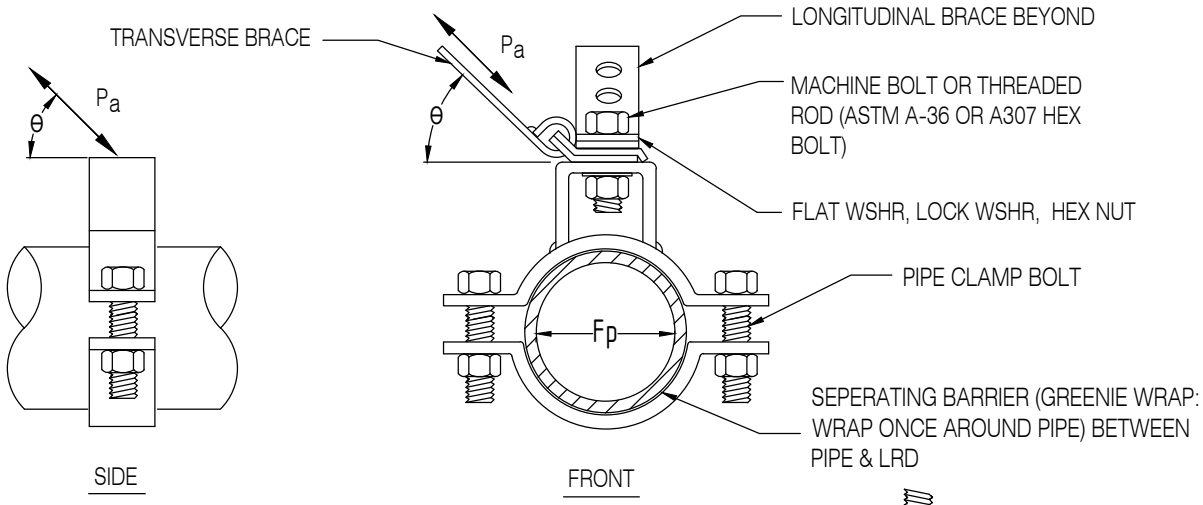

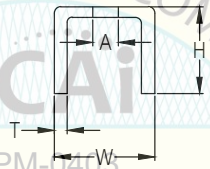

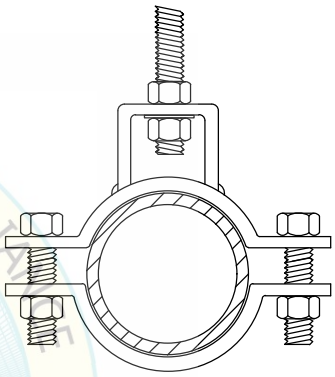

ALT. VERTICAL SUPPORT ONLY

Part Number	W (in)	H (in)	T (in)
LRD1.25~LRD5	1 3/4	2 7/8	0.22
LRD6	3	3 1/4	0.38
LRD8	3	4 1/4	0.38

REVIEWED FOR CODE COMPLIANCE
HCAi
OPM-0403
BY: William Staehlin
DATE: 01-26-2024
CALIFORNIA BUILDING CODE, 2021

Part Number	Pipe Dia. Inch	Pipe Clamp		"A"		Maximum Design Load (ASD)					
						θ = 0° - 41° [3]		θ = 42° - 48° [3]		θ = 49° - 60° [3]	
		Bolt Size (in)	Bolt Torque (ft-lbs)	Top Mounting Bolt Diameter (in)	Alternate Vertical Support Rod Dia. (in)	Transverse Pa (lbs)	Longitudinal Pa (lbs)	Transverse Pa (lbs)	Longitudinal Pa (lbs)	Transverse Pa (lbs)	Longitudinal Pa (lbs)
LRD1.25	1 1/4	3/8	19	3/8	3/8	205	120	275	160	310	185
LDR1.5	1 1/2	3/8	19	3/8	3/8	205	150	275	200	310	230
LRD2	2	1/2	19	3/8	3/8	205	585	275	785	310	890
LRD2.5	2 1/2	1/2	19	1/2	1/2	205	590	275	795	310	900
LRD3	3	3/4	19	1/2	1/2	260	670	350	900	395	1,020
LRD3.5	3 1/2	3/4	19	1/2	1/2	260	670	350	900	395	1,020
LRD4	4	7/8	35	5/8	5/8	260	580	350	780	395	885
LRD5	5	7/8	75	5/8	5/8	260	775	350	1,045	395	1,180
LRD6	6	1	75	5/8	5/8	435	660	585	890	665	1,005

1. CONFORMS TO FEDERAL SPECIFICATION WWH-171E, TYPE 1 AND MSS SP-58 TYPE 4.
2. FOR USE WITH COPPER; SEPERATING BARRIER (GREENIE WRAP) BETWEEN PIPE & LRD.
3. INSTALLATION ANGLE FROM HORIZONTAL.
4. FACTOR OF SAFETY = 2.0

LONGITUDINAL RESTRAINT DEVICE (LRD) - FOR USE WITH COPPER WITH GREENIE WRAP

REGISTERED PROFESSIONAL ENGINEER
MARCIN WASAZNIK
S 6612
STRUCTURAL
STATE OF CALIFORNIA

ISAT
A Division of Tomarco Contractor Specialties
International Seismic Application Technology
14848 Northam Street, La Mirada, CA 90638
877-999-4728 (Toll Free) 714-523-0845 (fax)
www.isatsb.com

Rev. 2
12/05/18

Page
F7.7.2

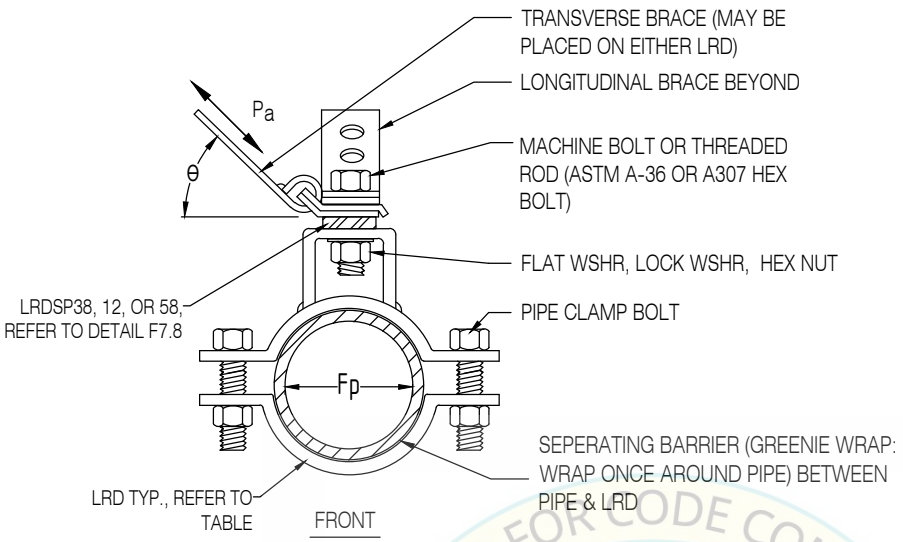

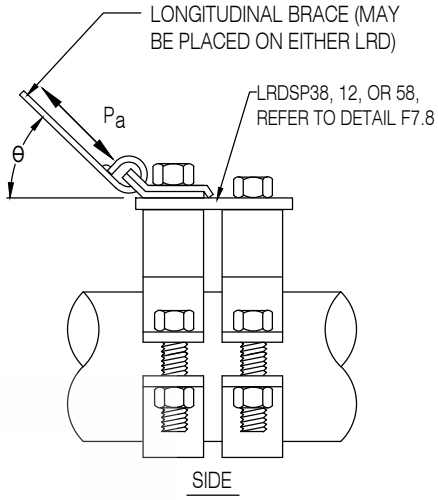

REVIEWED FOR CODE COMPLIANCE
HCAi
OPM-0403
BY: William Staehlin
DATE: 01-26-2024
CALIFORNIA BUILDING CODE, 2022

LRD Part Number	Splice Plate Part Number	Pipe Dia. Inch	Pipe Clamp		"A"		Maximum Design Load (ASD)					
							θ = 0° - 41° [3]		θ = 42° - 48° [3]		θ = 49° - 60° [3]	
			Bolt Size (in)	Bolt Torque (ft-lbs)	Top Mounting Bolt Diameter (in)	Alternate Vertical Support Rod Dia. (in)	Transverse Pa (lbs)	Longitudinal Pa (lbs)	Transverse Pa (lbs)	Longitudinal Pa (lbs)	Transverse Pa (lbs)	Longitudinal Pa (lbs)
LRD1.25	LRDSP38	1 1/4	3/8	19	3/8	3/8	205	240	275	320	310	370
LDR1.5	LRDSP38	1 1/2	3/8	19	3/8	3/8	205	300	275	400	310	460
LRD2	LRDSP12	2	1/2	19	3/8	3/8	205	1,170	275	1,570	310	1,780
LRD2.5	LRDSP12	2 1/2	1/2	19	1/2	1/2	205	1,180	275	1,590	310	1,800
LRD3	LRDSP12	3	3/4	19	1/2	1/2	260	1,340	350	1,800	395	2,040
LRD3.5	LRDSP12	3 1/2	3/4	19	1/2	1/2	260	1,340	350	1,800	395	2,040
LRD4	LRDSP58	4	7/8	35	5/8	5/8	260	1,160	350	1,560	395	1,770
LRD5	LRDSP58	5	7/8	75	5/8	5/8	260	1,550	350	2,090	395	2,360
LRD6	LRDSP34	6	1	75	5/8	5/8	435	1,320	585	1,780	665	2,010

1. CONFORMS TO FEDERAL SPECIFICATION WWH-171E, TYPE 1 AND MSS SP-58 TYPE 4.
2. FOR USE WITH COPPER; SEPERATING BARRIER (GREENIE WRAP) BETWEEN PIPE & LRD.
3. INSTALLATION ANGLE FROM HORIZONTAL.
4. FACTOR OF SAFETY = 2.0

DUAL LONGITUDINAL RESTRAINT DEVICE (LRD) - FOR USE WITH COPPER WITH GREENIE WRAP

REGISTERED PROFESSIONAL ENGINEER
MARCIN WASAZNIK
S 6612
STRUCTURAL
STATE OF CALIFORNIA

ISAT
A Division of Tomarco Contractor Specialties
International Seismic Application Technology
14848 Northam Street, La Mirada, CA 90638
877-999-4728 (Toll Free) 714-523-0845 (fax)
www.isatsb.com

Rev. 0
12/04/18

Page
F7.7.4

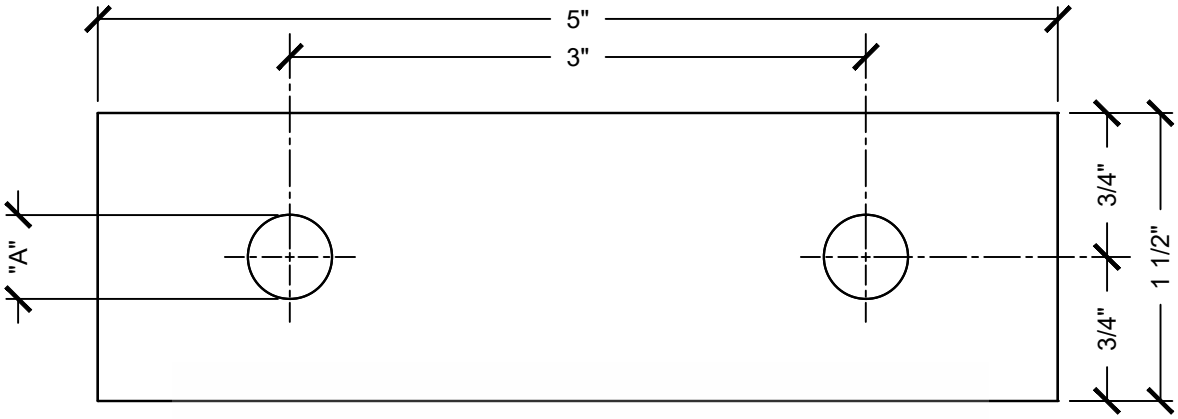

TOP VIEW

FRONT VIEW

REVIEWED FOR CODE COMPLIANCE
HCAi
OPM-0403
BY: William Staehlin
DATE: 01-26-2024
CALIFORNIA BUILDING CODE, 2022

LRD SPLICE PLATE	
MODEL #	A (in)
LRDSP38	7/16"
LRDSP12	9/16"
LRDSP58	11/16"

LRD SPLICE PLATE

REGISTERED PROFESSIONAL ENGINEER
MARCIN WASAZNIK
S 6612
STRUCTURAL
STATE OF CALIFORNIA

ISAT
A Division of Tomarco Contractor Specialties

International Seismic Application Technology
14848 Northam Street, La Mirada, CA 90638
877-999-4728 (Toll Free) 714-523-0845 (fax)
www.isatsb.com

Rev. 0
11/26/18

Page
F7.8

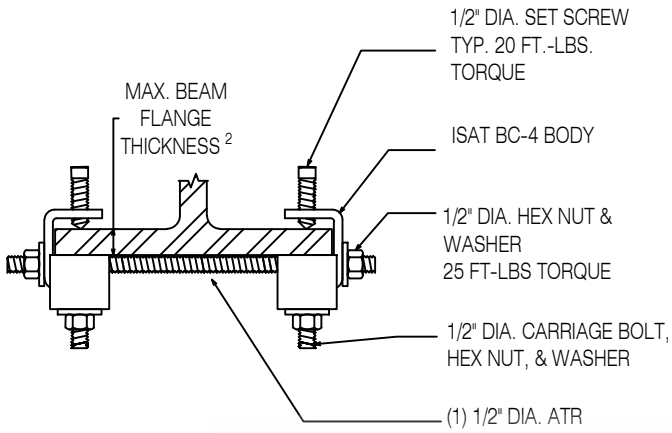

FRONT VIEW

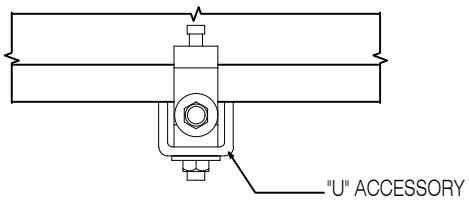

SIDE VIEW

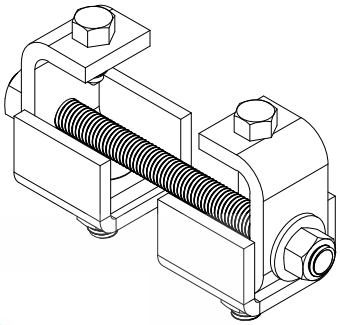

ISOMETRIC VIEW

NOTES
1. FOR ALLOWABLE LOADS, REFER TO PAGE D4._ SERIES DETAILS
2. MAX. ROD LENGTH = 12 INCHES
3. BC-4U MAX. FLANGE THICKNESS = 1 1/8"
4. ALL PARTS ASTM A-36 STEEL

REVIEWED FOR CODE COMPLIANCE
HCAi
OPM-0403
BY: William Staehlin
DATE: 01-26-2024
CALIFORNIA BUILDING CODE, 2022

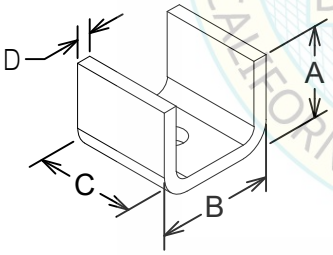

"U" ACCESSORY DIMENSIONS (in)			
A	B	C	D
1 1/2"	2 1/8"	2"	1/4"

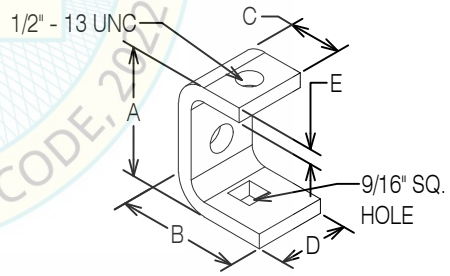

BC-4 BODY DIMENSIONS (in)				
A	B	C	D	E
2 7/8"	2"	1 1/2"	1 1/4"	3/8"

BC-4U BEAM CLAMP ASSEMBLY

REGISTERED PROFESSIONAL ENGINEER
MARCIN WASAZNIK
S 6612
STRUCTURAL
STATE OF CALIFORNIA

ISAT
A Division of Tomarco Contractor Specialties

International Seismic Application Technology
14848 Northam Street, La Mirada, CA 90638
877-999-4728 (Toll Free) 714-523-0845 (fax)
www.isatsb.com

Rev. 1
10/03/19

Page
F8.1

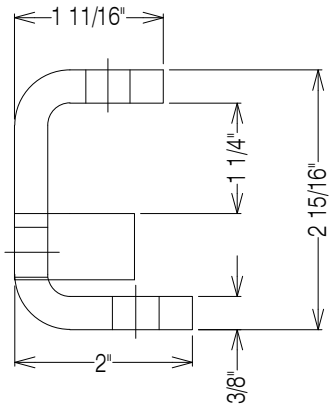

CLAMP BODY
SIDE VIEW

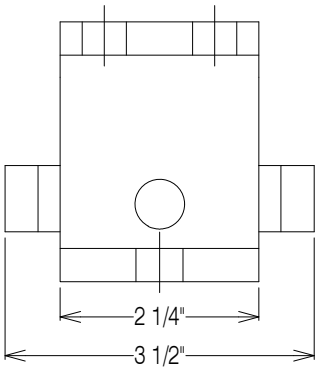

CLAMP BODY
FRONT VIEW

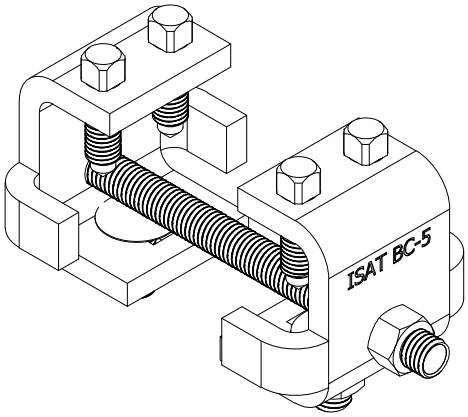

BC-5 ASSEMBLY
ISOMETRIC VIEW

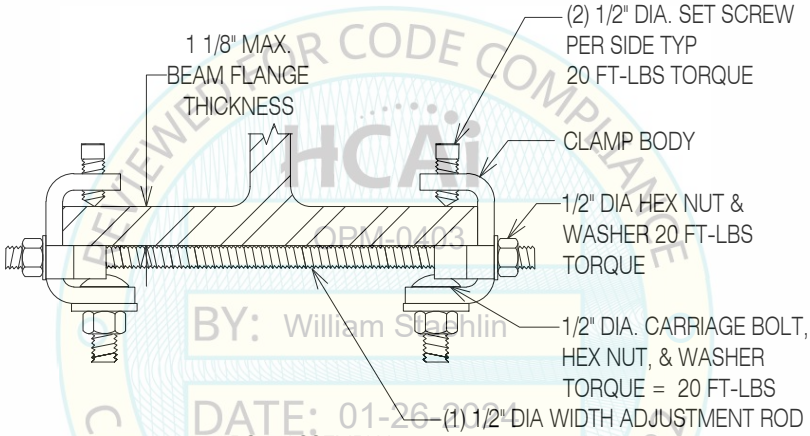

BC-5 ASSEMBLY
SIDE VIEW

REVIEWED FOR CODE COMPLIANCE
HCAi
OPM-0403
BY: William Staehlin
DATE: 01-26-2024
CALIFORNIA BUILDING CODE, 2022

INSTALLATION INSTRUCTIONS:

1. LOOSELY FIT BC-5 ASSEMBLY OVER THE STEEL BEAM AS SHOWN IN THE IMAGE ABOVE.
2. HAND TIGHTEN THE NUTS ON THE "WIDTH ADJUSTMENT ROD" AND SET SCREWS ON THE "CLAMP BODY" SO THAT THE "CLAMP BODY" ON EACH SIDE IS SITTING FLAT AGAINST THE SIDE OF THE BEAM FLANGE.
3. STARTING WITH EITHER OF THE "CLAMP BODIES", TORQUE THE FIRST SET SCREW TO 20 FT-LBS, THEN TORQUE THE SECOND SET SCREW TO 20 FT-LBS. NOTE, TORQUE EACH SET SCREW ONLY ONCE.
4. REPEAT STEP 3 ON THE OTHER "CLAMP BODY".
5. TORQUE THE NUTS ON THE "WIDTH ADJUSTMENT ROD" TO 20 FT-LBS.

NOTES

1. FOR ALLOWABLE LOADS, REFER TO PAGE D4.3.2, D4.4.2, D4.5.2,D4.6.2_ SERIES DETAILS
2. ALL PARTS ASTM A-36 STEEL.
3. ATTACHMENT TO STEEL BEAM SHALL NOT BE PLACED WITHIN THE PROTECTED ZONE AS DEFINED IN AISC 341.

BC-5 BEAM CLAMP ASSEMBLY

REGISTERED PROFESSIONAL ENGINEER
MARCIN WASAZNIK
S-6612
STRUCTURAL
STATE OF CALIFORNIA

ISAT
A Division of Tomarco Contractor Specialties
International Seismic Application Technology
14848 Northam Street, La Mirada, CA 90638
877-999-4728 (Toll Free) 714-523-0845 (fax)
www.isatsb.com

Rev. 0
06/01/23

Page
F8.2

1 MATERIAL: CARBON STEEL.

2 MATERIAL: PLASTIC, COLOR - GRAY.

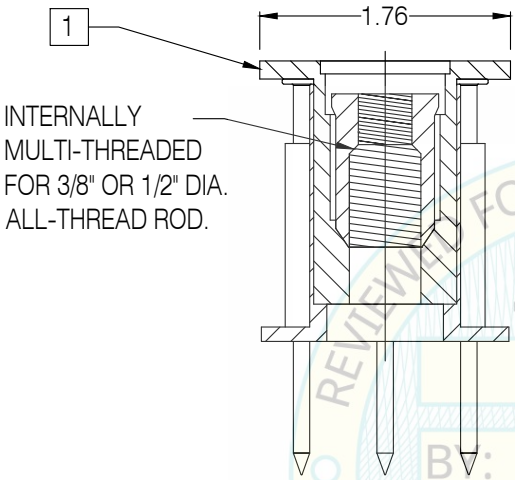

SECTION A - A

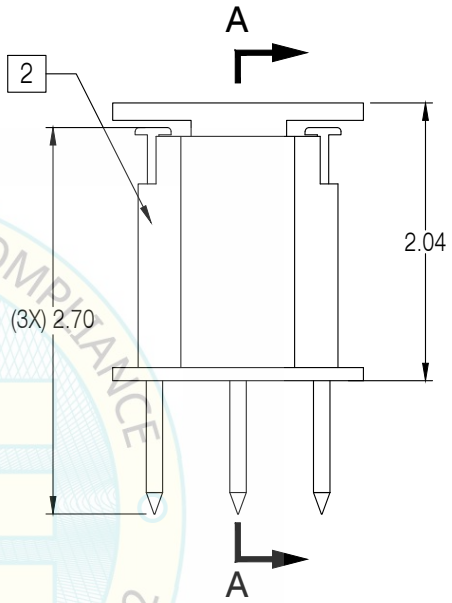

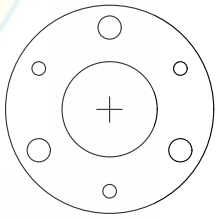

REVIEWED FOR CODE COMPLIANCE
HCAi
OPM-0403
BY: William Staehlin
DATE: 01-26-2024
CALIFORNIA BUILDING CODE, 2022

APPROVALS

ICC ES ***ESR-3599***

PUSH ROD POURED-IN-PLACE "PRPIP3812" SEISMICALLY QUALIFIED DECK INSERT FOR FORM POUR SLABS AND WALLS

REGISTERED PROFESSIONAL ENGINEER MARCIN WASAZNIK S 6612 STRUCTURAL STATE OF CALIFORNIA

ISAT
A Division of Tomarco Contractor Specialties

International Seismic Application Technology
14848 Northam Street, La Mirada, CA 90638
877-999-4728 (Toll Free) 714-523-0845 (fax)
www.isatsb.com

Rev. 9
07/02/18

Page
F10.0

1 MATERIAL: CARBON STEEL.

2 MATERIAL: PLASTIC, COLOR - GRAY.

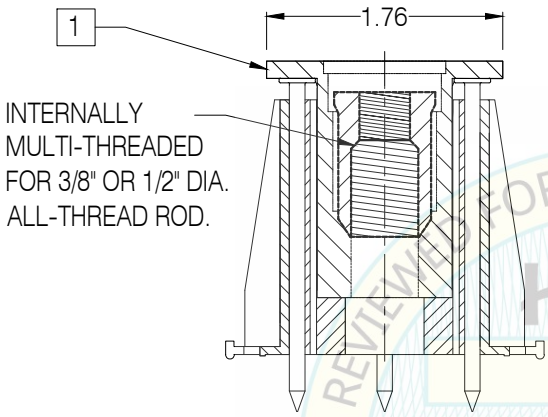

SECTION A - A

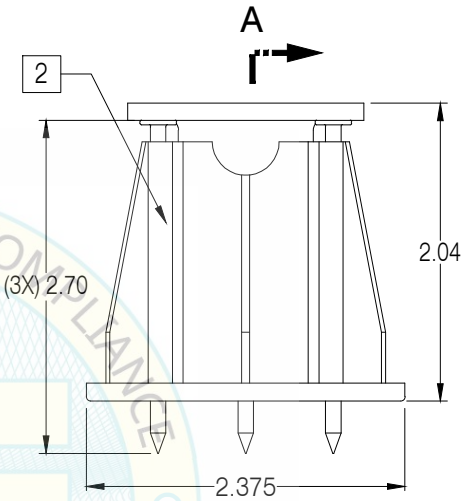

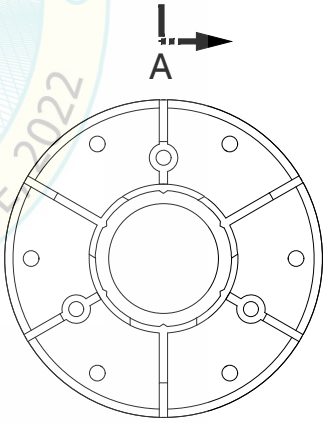

REVIEWED FOR CODE COMPLIANCE
HCAi
OPM-0403
BY: William Staehlin
DATE: 01-26-2024
CALIFORNIA BUILDING CODE 2022

APPROVALS

ICC ES ***ESR-3599***

PUSH ROD POURED-IN-PLACE "PRPIP3812" SEISMICALLY QUALIFIED DECK INSERT FOR FORM POUR SLABS AND WALLS

REGISTERED PROFESSIONAL ENGINEER MARCIN WASAZNIK S 6612 STRUCTURAL STATE OF CALIFORNIA

ISAT
A Division of Tomarco Contractor Specialties

International Seismic Application Technology
14848 Northam Street, La Mirada, CA 90638
877-999-4728 (Toll Free) 714-523-0845 (fax)
www.isatsb.com

Rev. 0
09/13/19

Page
F10.0.1

1 MATERIAL: CARBON STEEL.

2 MATERIAL: PLASTIC, COLOR - BLUE.

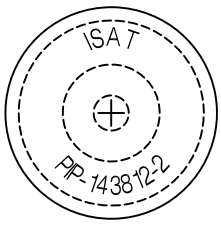

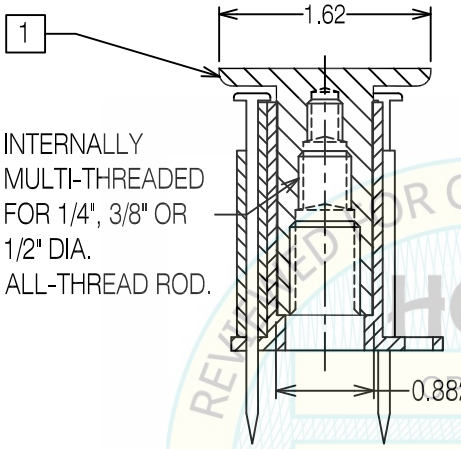

SECTION A - A

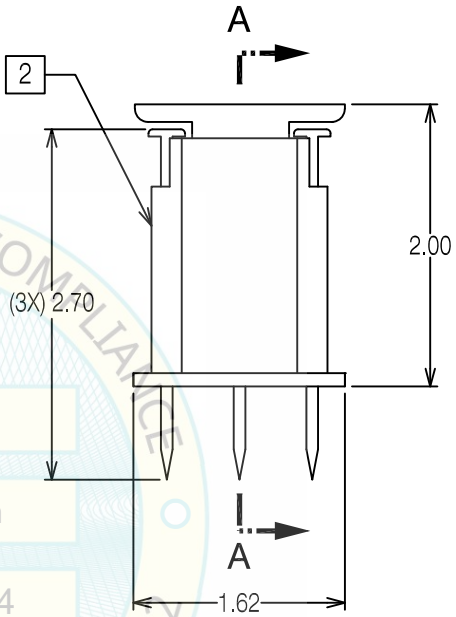

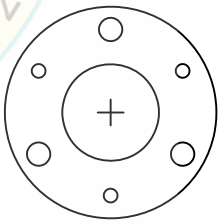

REVIEWED FOR CODE COMPLIANCE
HCAi
OPM-0403
BY: William Staehlin
DATE: 01-26-2024
CALIFORNIA BUILDING CODE, 2022

APPROVALS

ICC ES ***ESR-3599***

BLUE BANGER HANGER (BBH) POURED-IN-PLACE "PIP143812-2" SEISMICALLY QUALIFIED DECK INSERT FOR FORM POUR SLABS AND WALLS

REGISTERED PROFESSIONAL ENGINEER
MARCIN WASAZNIK
S 6612
STRUCTURAL
STATE OF CALIFORNIA

ISAT
A Division of Tomarco Contractor Specialties
International Seismic Application Technology
14848 Northam Street, La Mirada, CA 90638
877-999-4728 (Toll Free) 714-523-0845 (fax)
www.isatsb.com

Rev. 9
05/17/17

Page
F10.1

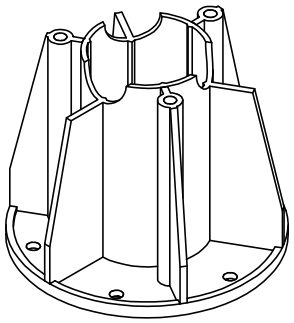

ISOMETRIC - WIDE BASE

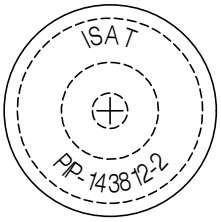

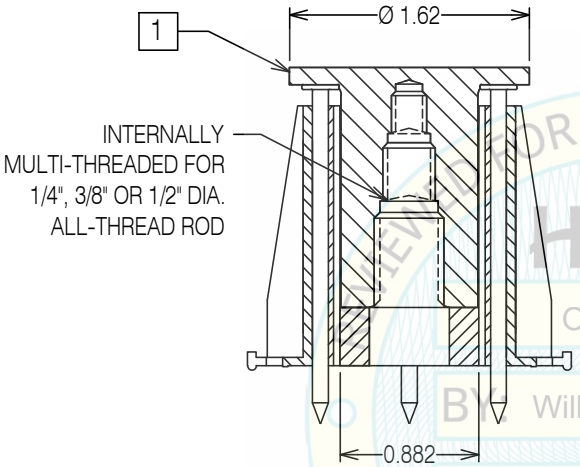

SECTION A-A

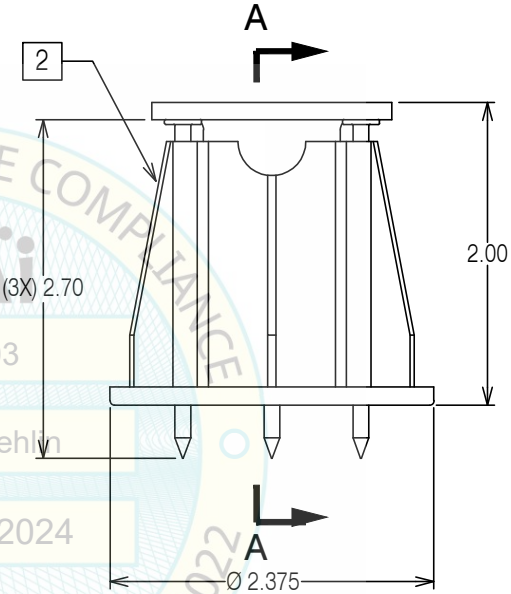

NEW YORK CODE COMPLIANCE
HCAi
OPM-0403
BY: William Staehlin
DATE: 01-26-2024
CALIFORNIA BUILDING CODE, 2022

APPROVALS

ICC ES ***ESR-3599***

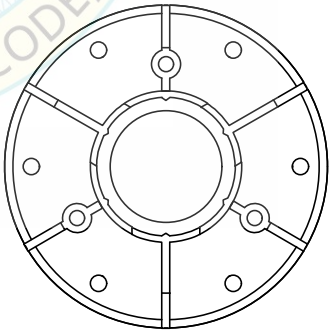

1 MATERIAL: CARBON STEEL.

2 MATERIAL: PLASTIC, COLOR - BLUE.

BLUE BANGER HANGER (BBH) POURED-IN-PLACE "PIP143812-2" SEISMICALLY QUALIFIED DECK INSERT FOR FORM POUR SLABS AND WALLS

REGISTERED PROFESSIONAL ENGINEER
MARCIN WASAZNIK
S 6612
STRUCTURAL
STATE OF CALIFORNIA

ISAT
A Division of Tomarco Contractor Specialties

International Seismic Application Technology
14848 Northam Street, La Mirada, CA 90638
877-999-4728 (Toll Free) 714-523-0845 (fax)
www.isatsb.com

Rev. 0
09/13/19

Page
F10.1.1

1 MATERIAL: CARBON STEEL.

2 MATERIAL: PLASTIC, COLOR - BLUE.

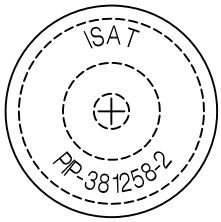

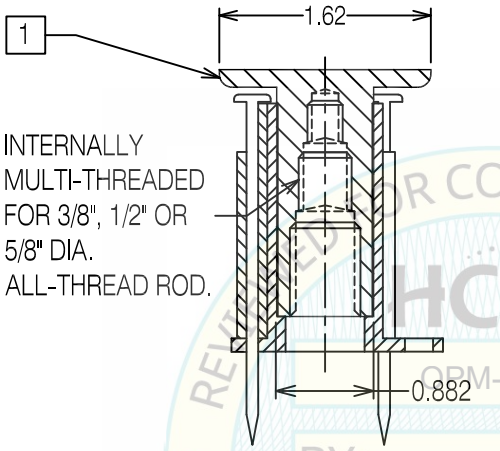

SECTION A - A

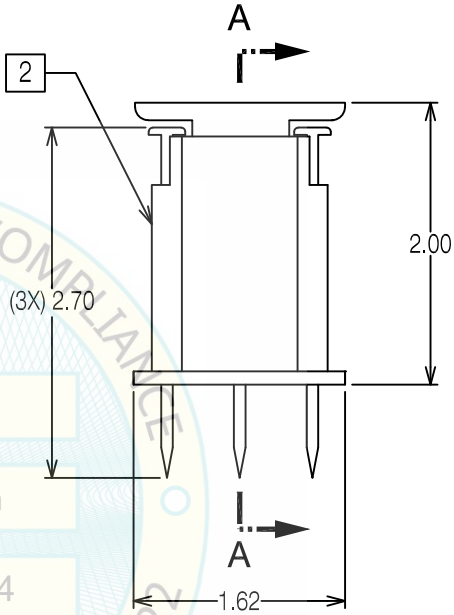

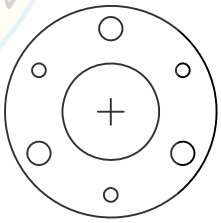

REVIEWED FOR CODE COMPLIANCE
HCAi
OPM-0403
BY: William Staehlin
DATE: 01-26-2024
CALIFORNIA BUILDING CODE, 2022

APPROVALS

ICC ES ***ESR-3599***

BLUE BANGER HANGER (BBH) POURED-IN-PLACE "PIP381258-2" SEISMICALLY QUALIFIED DECK INSERT FOR FORM POUR SLABS AND WALLS

REGISTERED PROFESSIONAL ENGINEER
MARCIN WASAZNIK
S 6612
STRUCTURAL
STATE OF CALIFORNIA

ISAT
A Division of Tomarco Contractor Specialties
International Seismic Application Technology
14848 Northam Street, La Mirada, CA 90638
877-999-4728 (Toll Free) 714-523-0845 (fax)
www.isatsb.com

Rev. 9
05/17/17

Page
F10.2

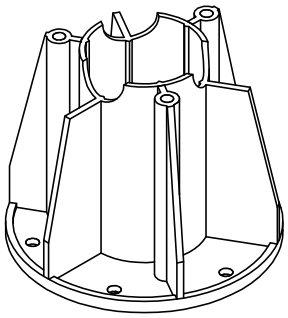

ISOMETRIC - WIDE BASE

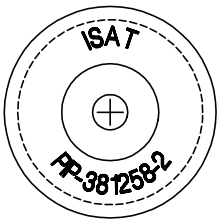

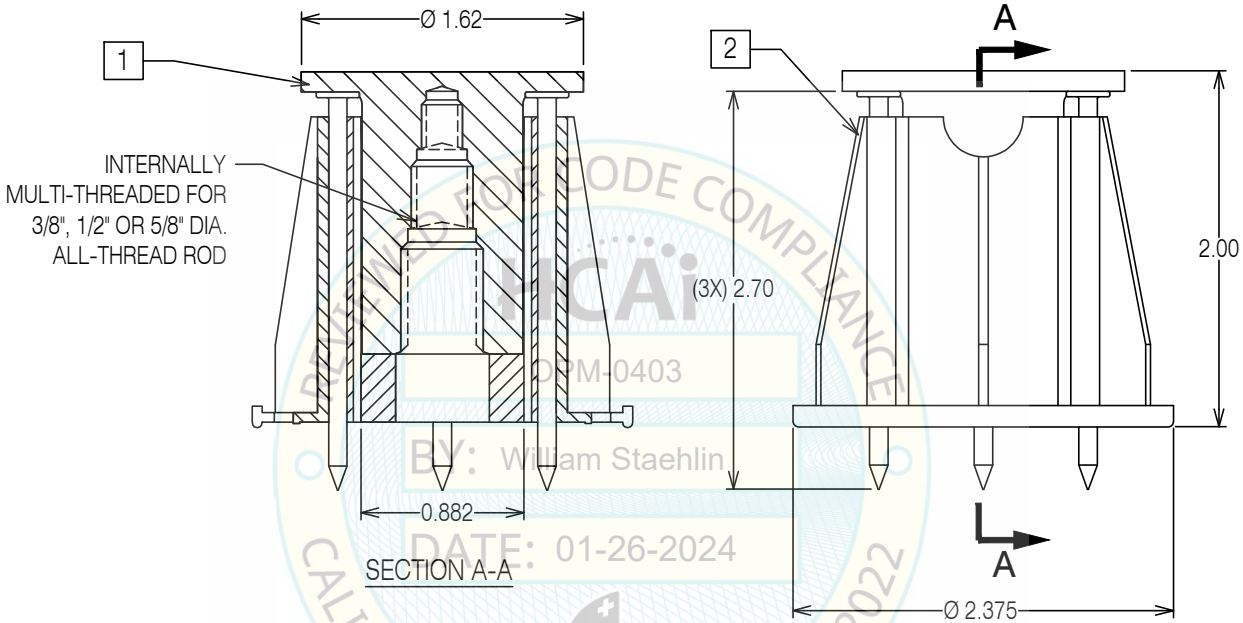

PERMITTED FOR CODE COMPLIANCE
OPM-0403
BY: William Staehlin
DATE: 01-26-2024
CALIFORNIA BUILDING CODE, 2022

APPROVALS

ICC ES ***ESR-3599***

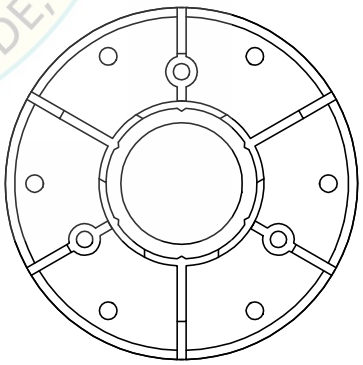

1 MATERIAL: CARBON STEEL

2 MATERIAL: PLASTIC, COLOR - BLUE

BLUE BANGER HANGER (BBH) POURED-IN-PLACE "PIP381258-2" SEISMICALLY QUALIFIED DECK INSERT FOR FORM POUR SLABS AND WALLS

REGISTERED PROFESSIONAL ENGINEER
MARCIN WASAZNIK
S 6612
STRUCTURAL
STATE OF CALIFORNIA

ISAT
A Division of Tomarco Contractor Specialties

International Seismic Application Technology
14848 Northam Street, La Mirada, CA 90638
877-999-4728 (Toll Free) 714-523-0845 (fax)
www.isatsb.com

Rev. 0
09/13/19

Page
F10.2.1

1 MATERIAL: CARBON STEEL.

2 MATERIAL: PLASTIC, COLOR - BLUE.

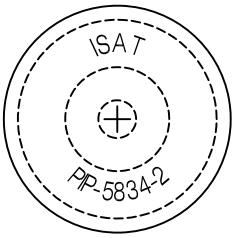

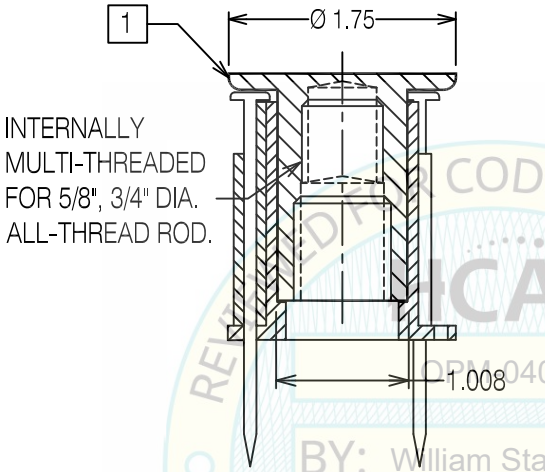

SECTION A - A

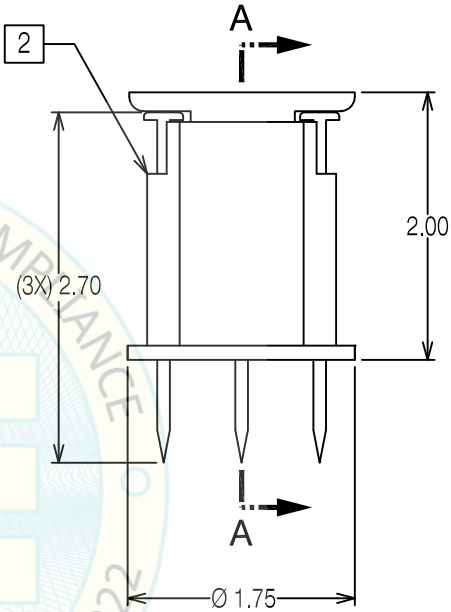

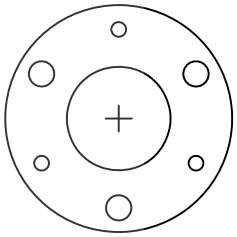

APPROVALS

ICC ES ***ESR-3599***

REVIEWED FOR CODE COMPLIANCE
HCAi
OPM-0403
BY: William Staehlin
DATE: 01-26-2024
CALIFORNIA BUILDING CODE, 2022

BLUE BANGER HANGER (BBH) POURED-IN-PLACE "PIP5834-2" SEISMICALLY QUALIFIED DECK INSERT FOR FORM POUR SLABS AND WALLS

REGISTERED PROFESSIONAL ENGINEER MARCIN WASAZNIK S 6612 STRUCTURAL STATE OF CALIFORNIA

ISAT
A Division of Tomarco Contractor Specialties
International Seismic Application Technology
14848 Northam Street, La Mirada, CA 90638
877-999-4728 (Toll Free) 714-523-0845 (fax)
www.isatsb.com

Rev. 9
05/17/17

Page
F10.3

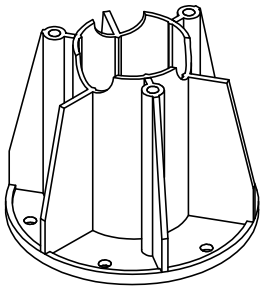

ISOMETRIC - WIDE BASE

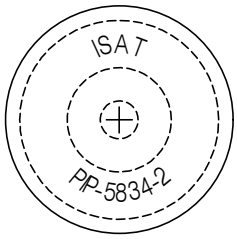

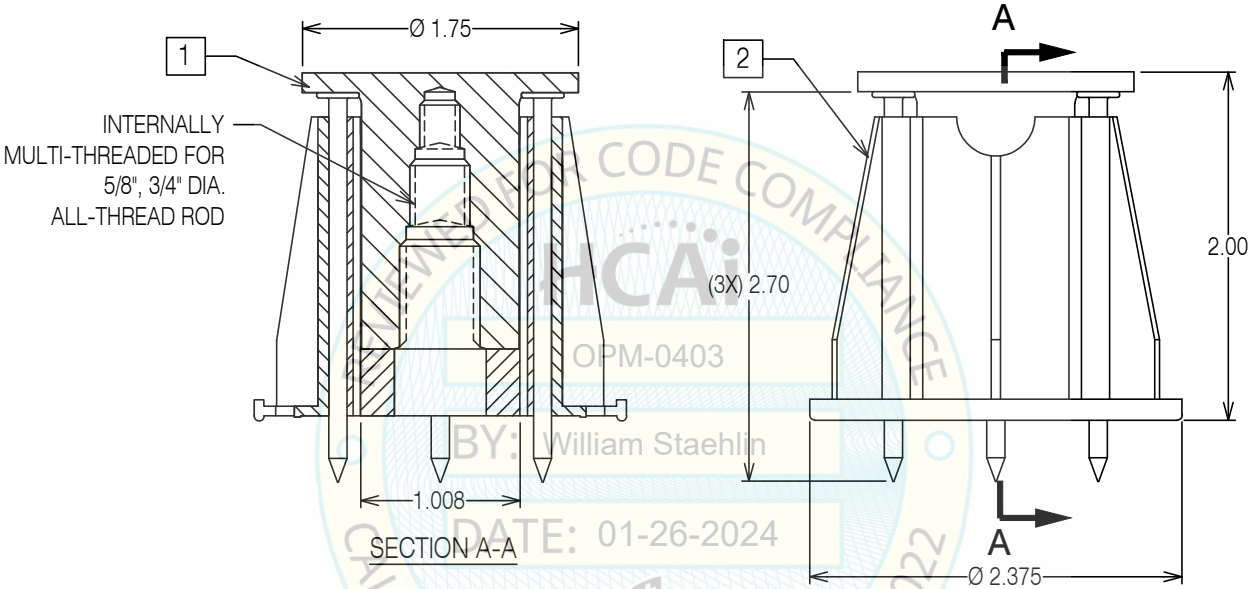

REVIEWED FOR CODE COMPLIANCE
HCAi
OPM-0403
BY: William Staehlin
DATE: 01-26-2024
CALIFORNIA BUILDING CODE, 2022

APPROVALS

ICC ES ***ESR-3599***

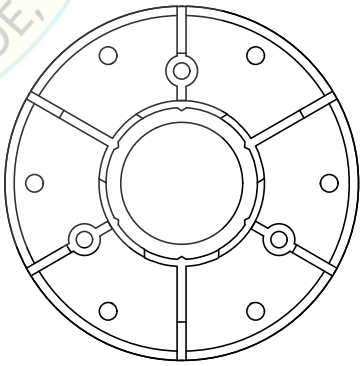

1 MATERIAL: CARBON STEEL

2 MATERIAL: PLASTIC, COLOR - BLUE

BLUE BANGER HANGER (BBH) POURED-IN-PLACE "PIP5834-2" SEISMICALLY QUALIFIED DECK INSERT FOR FORM POUR SLABS AND WALLS

REGISTERED PROFESSIONAL ENGINEER
MARCIN WASAZNIK
S 6612
STRUCTURAL
STATE OF CALIFORNIA

ISAT
A Division of Tomarco Contractor Specialties

International Seismic Application Technology
14848 Northam Street, La Mirada, CA 90638
877-999-4728 (Toll Free) 714-523-0845 (fax)
www.isatsb.com

Rev. 0
09/13/19

Page
F10.3.1

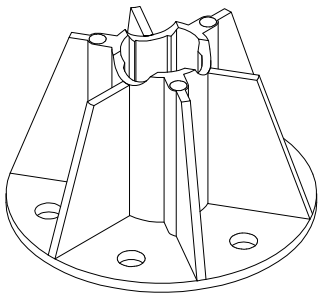

ISOMETRIC - WIDE BASE

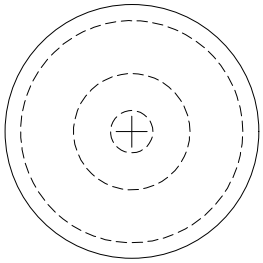

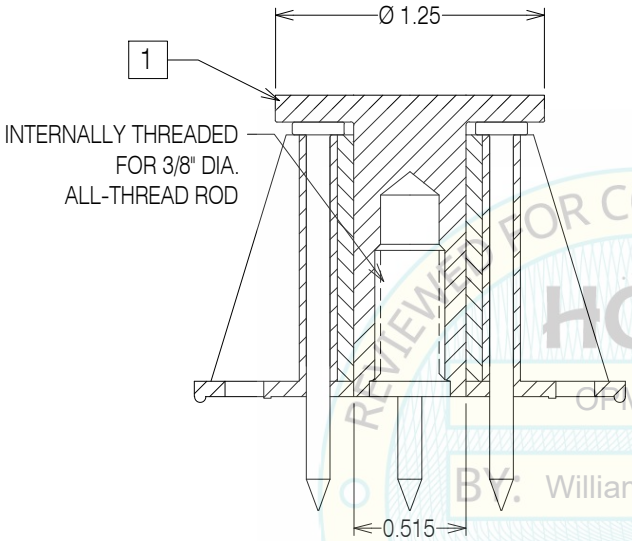

SECTION A-A

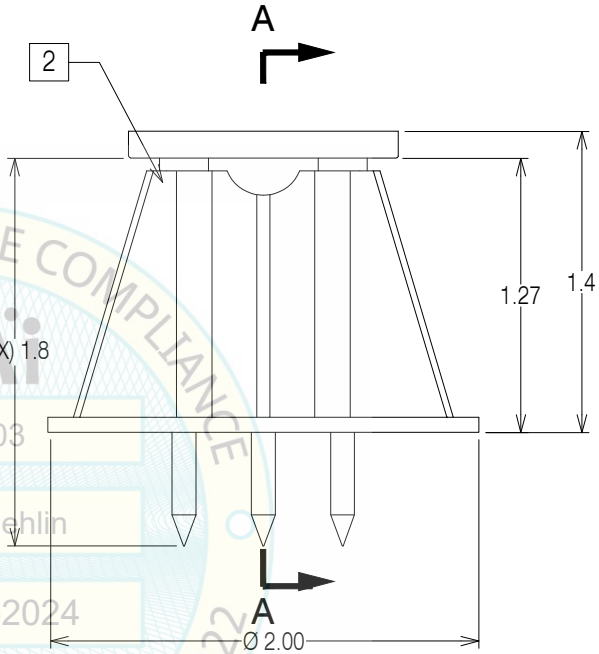

REVIEWED FOR CODE COMPLIANCE
HCAi
OPM-0403
BY: William Staehlin
DATE: 01-26-2024
CALIFORNIA BUILDING CODE, 2022

APPROVALS

ICC ES ***ESR-3599***

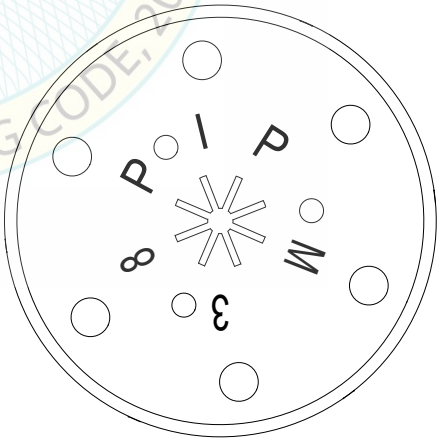

1 MATERIAL: CARBON STEEL.
FINISH: 0.0002" MIN. ZINC
YELLOW CHROMATE, TYPE 2
PLATING PER ASTM B633-85

2 MATERIAL: PLASTIC, COLOR - BLUE.

POURED-IN-PLACE "PIPM38"
SEISMICALLY QUALIFIED DECK INSERT
FOR FORM POUR SLABS AND WALLS

REGISTERED PROFESSIONAL ENGINEER
MARCIN WASAZNIK
S 6612
STRUCTURAL
STATE OF CALIFORNIA

ISAT
A Division of Tomarco Contractor Specialties
International Seismic Application Technology
14848 Northam Street, La Mirada, CA 90638
877-999-4728 (Toll Free) 714-523-0845 (fax)
www.isatsb.com

Rev. 0
06/05/23
Page
F10.4

1 MATERIAL: CARBON STEEL.

2 MATERIAL: PLASTIC, COLOR - GRAY.

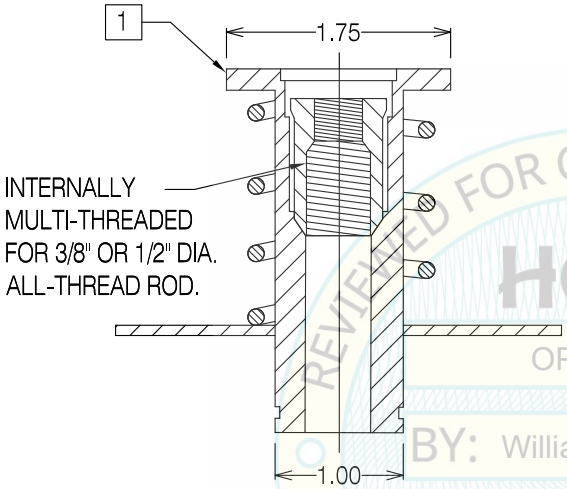

SECTION A - A

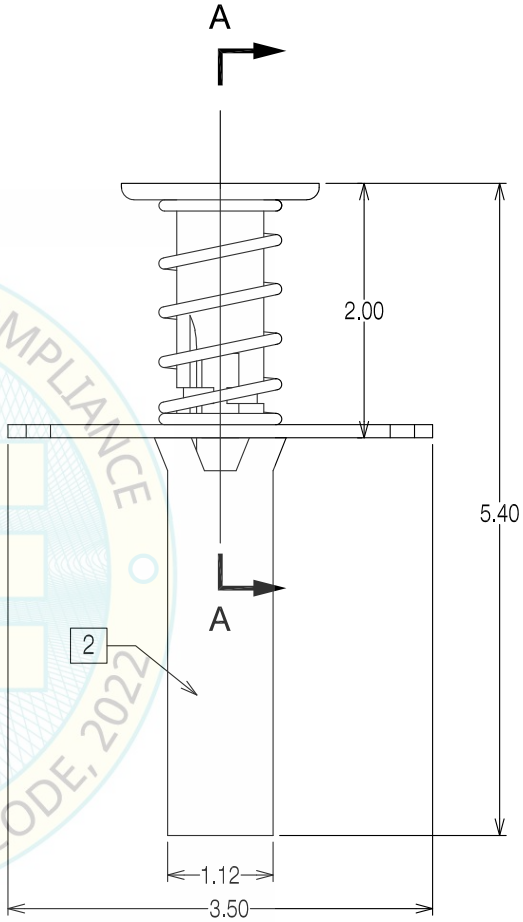

APPROVALS

ICC ES ***ESR-3599***

REVIEWED FOR CODE COMPLIANCE
HCAi
OPM-0403
BY: William Staehlin
DATE: 01-26-2024
CALIFORNIA BUILDING CODE, 2022

PUSH ROD STEEL DECK INSERT "PRSDI3812"
SEISMICALLY QUALIFIED DECK INSERT
FOR METAL DECKS

REGISTERED PROFESSIONAL ENGINEER
MARCIN WASAZNIK
S 6612
STRUCTURAL
STATE OF CALIFORNIA

ISAT
A Division of Tomarco Contractor Specialties

International Seismic Application Technology
14848 Northam Street, La Mirada, CA 90638
877-999-4728 (Toll Free) 714-523-0845 (fax)
www.isatsb.com

Rev. 9
03/20/18

Page
F11.0

1 MATERIAL: CARBON STEEL.

2 MATERIAL: PLASTIC, COLOR - BLUE.

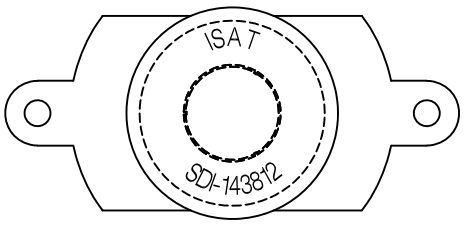

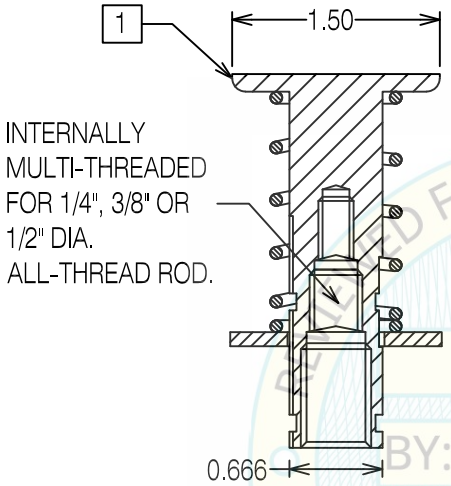

SECTION A - A

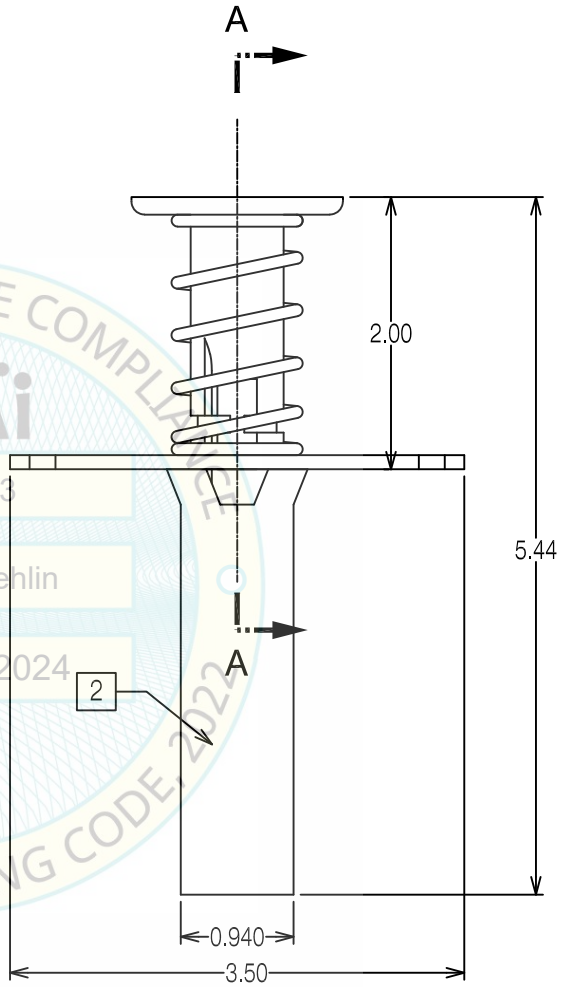

REVIEWED FOR CODE COMPLIANCE
HCAi
OPM-0403
BY: William Staehlin
DATE: 01-26-2024
CALIFORNIA BUILDING CODE, 2022

APPROVALS

ICC ES ***ESR-3599***

STEEL DECK INSERT "SDI143812"
SEISMICALLY QUALIFIED DECK INSERT
FOR METAL DECKS WITH CONCRETE

REGISTERED PROFESSIONAL ENGINEER
MARCIN WASAZNIK
S 6612
STRUCTURAL
STATE OF CALIFORNIA

ISAT
A Division of Tomarco Contractor Specialties
International Seismic Application Technology
14848 Northam Street, La Mirada, CA 90638
877-999-4728 (Toll Free) 714-523-0845 (fax)
www.isatsb.com

Rev. 9
05/17/17

Page
F11.1

1 MATERIAL: CARBON STEEL.

2 MATERIAL: PLASTIC, COLOR - BLUE.

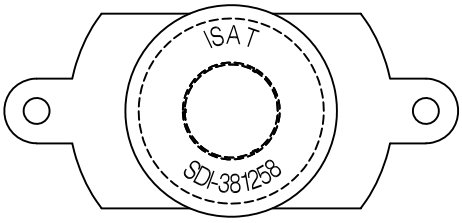

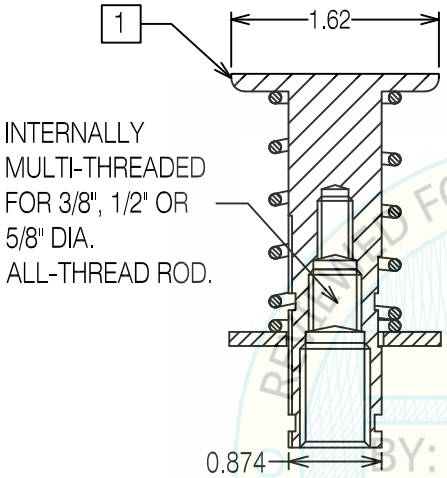

SECTION A - A

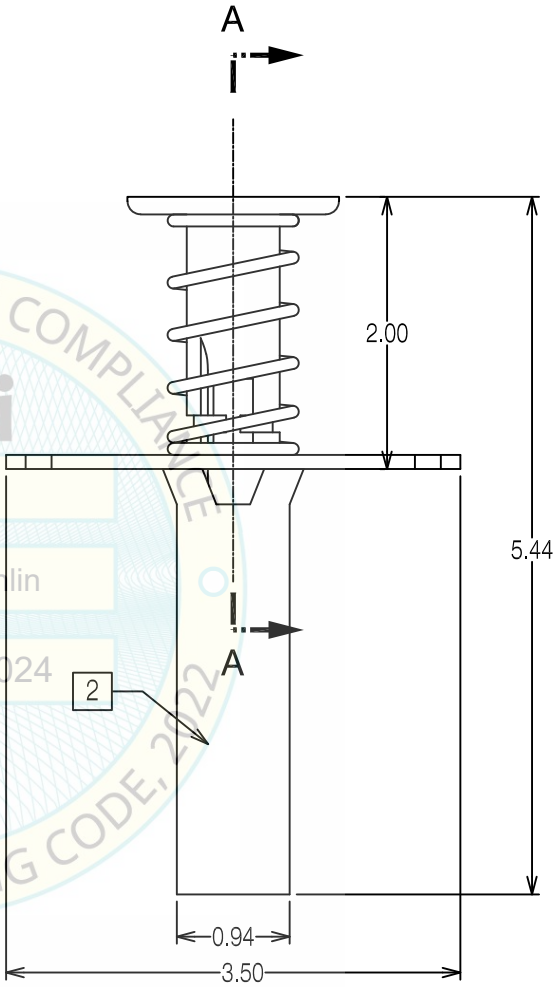

APPROVALS

ICC ES ***ESR-3599***

REVIEWED FOR CODE COMPLIANCE
HCAi
OPM-0403
BY: William Staehlin
DATE: 01-26-2024
CALIFORNIA BUILDING CODE, 2022

STEEL DECK INSERT "SDI381258"
SEISMICALLY QUALIFIED DECK INSERT
FOR METAL DECKS WITH CONCRETE

REGISTERED PROFESSIONAL ENGINEER
MARCIN WASAZNIK
S 6612
STRUCTURAL
STATE OF CALIFORNIA

ISAT
A Division of Tomarco Contractor Specialties
International Seismic Application Technology
14848 Northam Street, La Mirada, CA 90638
877-999-4728 (Toll Free) 714-523-0845 (fax)
www.isatsb.com

Rev. 9
05/17/17

Page
F11.2

1 MATERIAL: CARBON STEEL.

2 MATERIAL: PLASTIC, COLOR - BLUE.

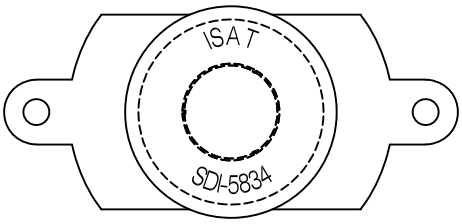

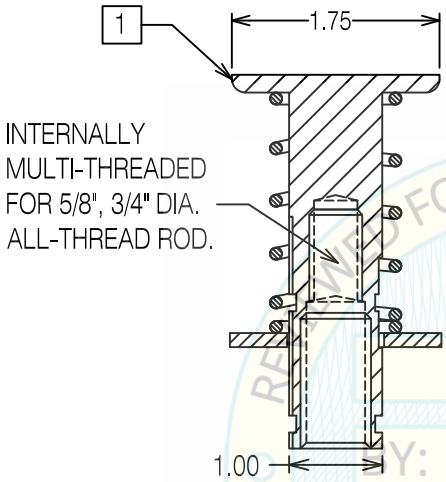

SECTION A - A

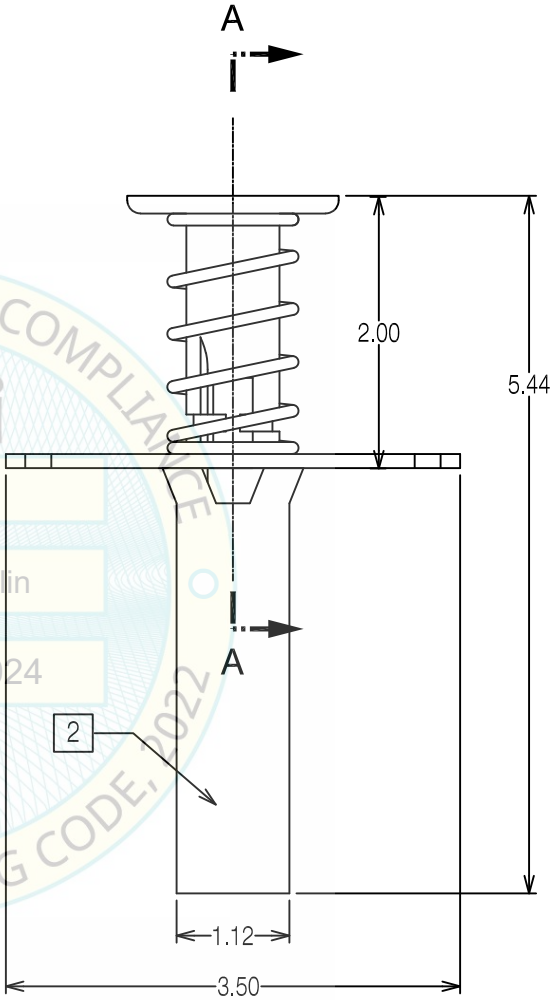

APPROVALS

ICC ES ***ESR-3599***

REVIEWED FOR CODE COMPLIANCE
HCAi
OPM-0403
BY: William Staehlin
DATE: 01-26-2024
CALIFORNIA BUILDING CODE, 2022

STEEL DECK INSERT "SDI5834"
SEISMICALLY QUALIFIED DECK INSERT
FOR METAL DECKS WITH CONCRETE

REGISTERED PROFESSIONAL ENGINEER
MARCIN WASAZNIK
S 6612
STRUCTURAL
STATE OF CALIFORNIA

ISAT
A Division of Tomarco Contractor Specialties

International Seismic Application Technology
14848 Northam Street, La Mirada, CA 90638
877-999-4728 (Toll Free) 714-523-0845 (fax)
www.isatsb.com

Rev. 9
05/17/17

Page
F11.3

NOTES - UNLESSWISE SPECIFIED.

1. WORKMANSHIP IAW ANSI B94.9-2008.
2. REMOVE ALL BURRS, SHARP EDGES, AND SURFACE IMPERFECTIONS - PROCESS OPTIONAL.
3. MATERIAL: ASTM A36 CARBON STEEL
4. USE WITH "SDI" BLUE BANGER HANGER, DRAWING PG NO: F11.1

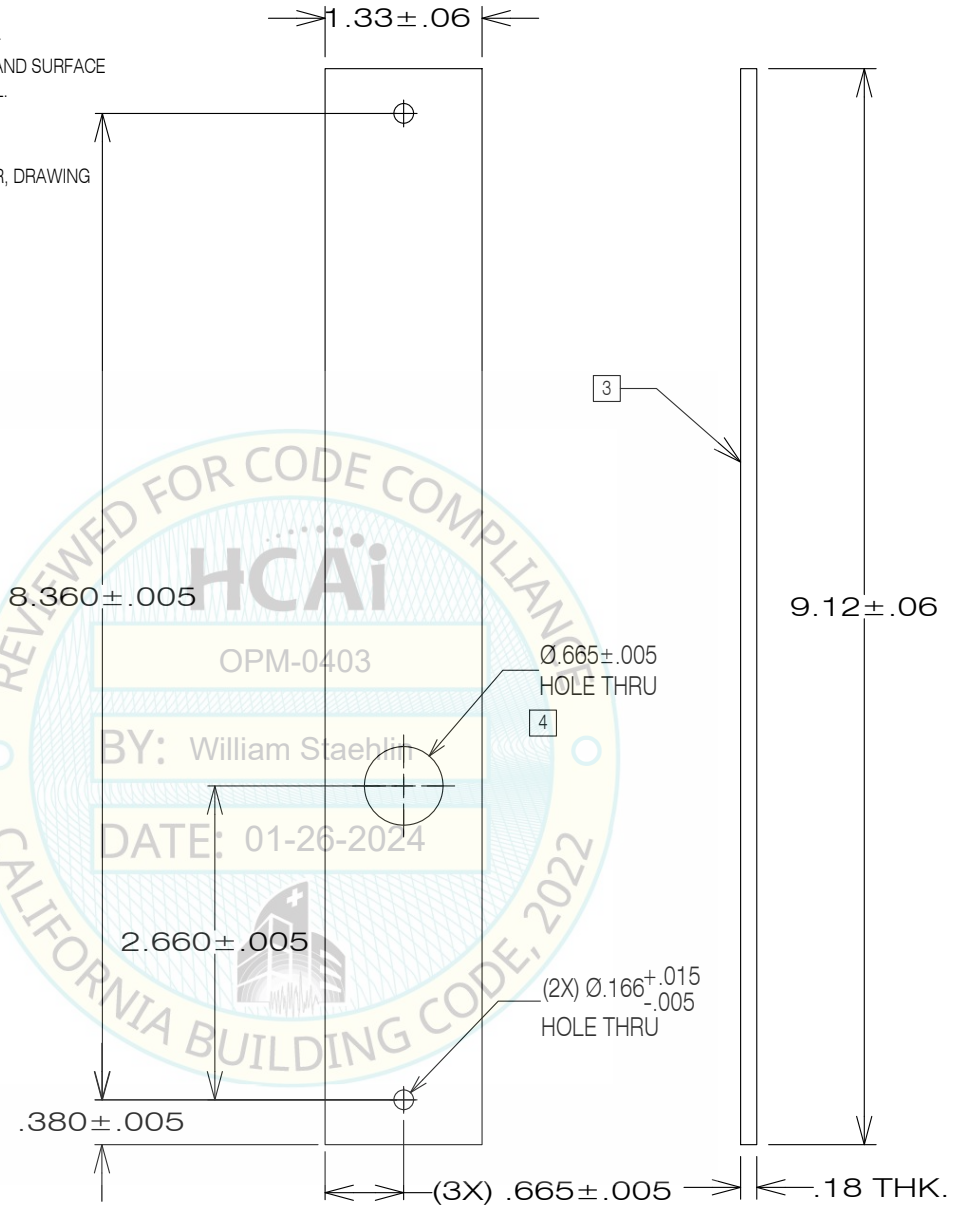

REVIEWED FOR CODE COMPLIANCE
HCAi
OPM-0403
BY: William Staehlin
DATE: 01-26-2024
CALIFORNIA BUILDING CODE, 2022

"FSB-1" SDI FLUTE SPAN BRACKET FOR METAL DECKS WITH CONCRETE

REGISTERED PROFESSIONAL ENGINEER
MARCIN WASAZNIK
S 6612
STRUCTURAL
STATE OF CALIFORNIA

ISAT
A Division of Tomarco Contractor Specialties
International Seismic Application Technology
14848 Northam Street, La Mirada, CA 90638
877-999-4728 (Toll Free) 714-523-0845 (fax)
www.isatsb.com

Rev. 9
08/03/18

Page
F12.1

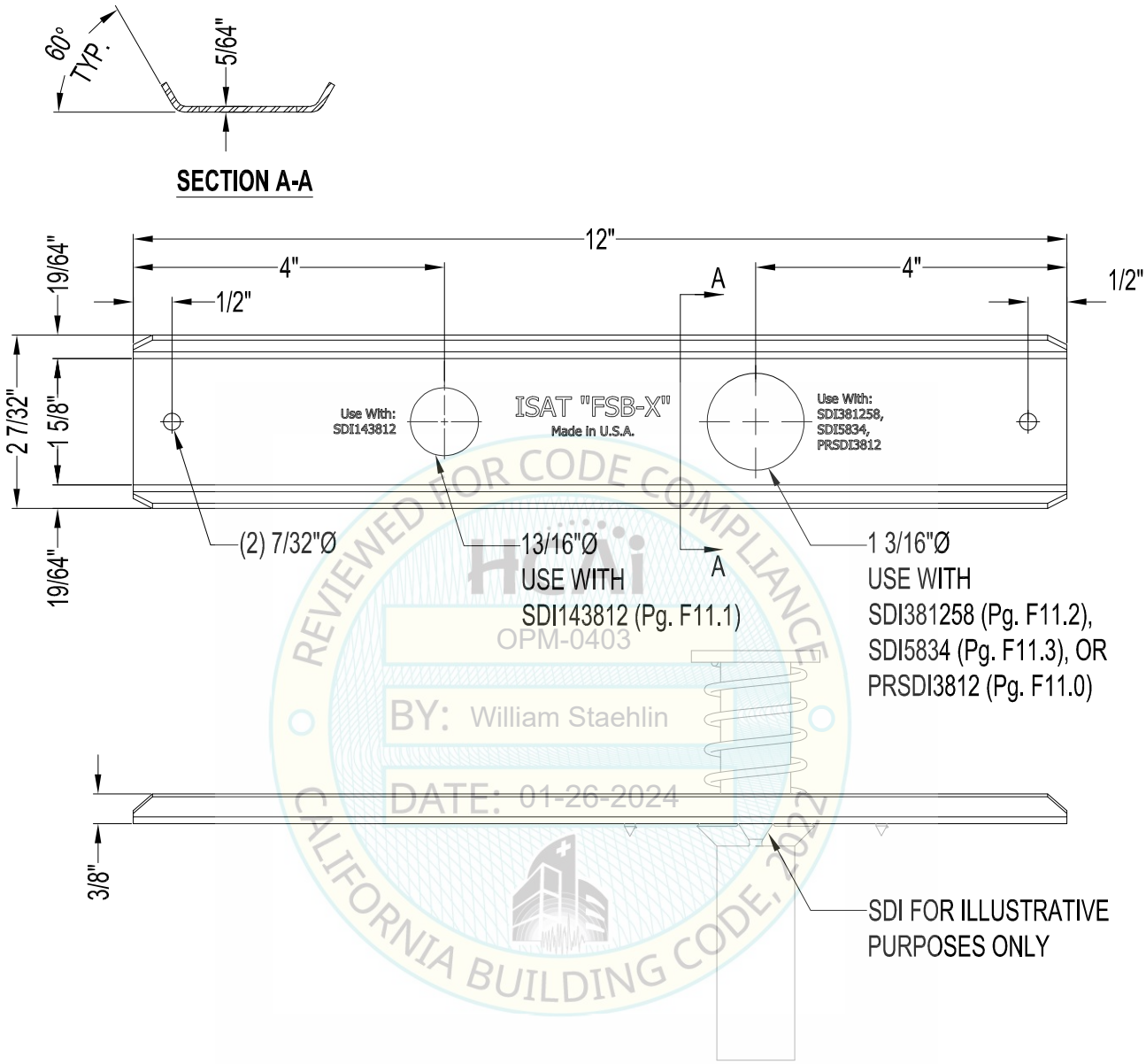

REVIEWED FOR CODE COMPLIANCE
HCAi
OPM-0403
BY: William Staehlin
DATE: 01-26-2024
CALIFORNIA BUILDING CODE, 2022

NOTES - UNLESS OTHERWISE SPECIFIED.

1. MATERIAL: 14 GA. ASTM A1008/1010 CS TYPE B. FINISH: ASTM A653-G30
2. USE WITH ISAT "SDI" BLUE BANGER HANGER OR ISAT "PRSDI" PUSH ROD STEEL DECK INSERT.
3. MAY BE USED WITH OTHER SIMILAR TYPE CONCRETE INSERT PRODUCTS. USER TO VERIFY SUITABILITY.

"FSB-X" SDI FLUTE SPAN BRACKET FOR METAL DECKS WITH CONCRETE

REGISTERED PROFESSIONAL ENGINEER
MARCIN WASAZNIK
S 6612
STRUCTURAL
STATE OF CALIFORNIA

ISAT
A Division of Tomarco Contractor Specialties
International Seismic Application Technology
14848 Northam Street, La Mirada, CA 90638
877-999-4728 (Toll Free) 714-523-0845 (fax)
www.isatsb.com

Rev. 0
03/28/19

Page
F12.1.1

NOTES - UNLESSWISE SPECIFIED.

1. WORKMANSHIP IAW ANSI B94.9-2008.
2. REMOVE ALL BURRS, SHARP EDGES, AND SURFACE IMPERFECTIONS - PROCESS OPTIONAL.
3. MATERIAL: ASTM A36 CARBON STEEL
4. USE WITH "SDI" BLUE BANGER HANGER, DRAWING PG NO: F11.2 OR F11.3.

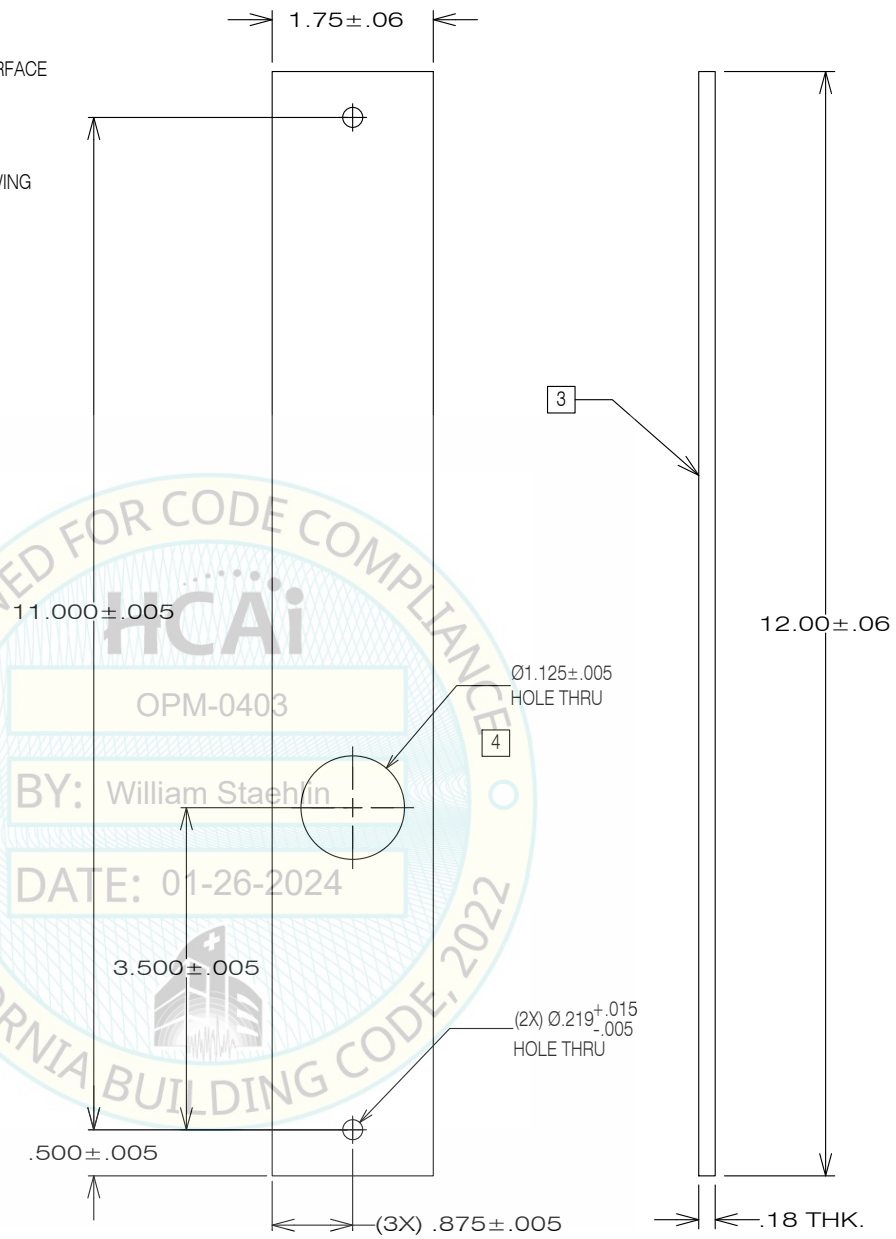

REVIEWED FOR CODE COMPLIANCE
HCAi
OPM-0403
BY: William Staehlin
DATE: 01-26-2024
CALIFORNIA BUILDING CODE, 2022

"FSB-2" SDI FLUTE SPAN BRACKET FOR METAL DECKS WITH CONCRETE

REGISTERED PROFESSIONAL ENGINEER
MARCIN WASAZNIK
S 6612
STRUCTURAL
STATE OF CALIFORNIA

ISAT
A Division of Tomarco Contractor Specialties
International Seismic Application Technology
14848 Northam Street, La Mirada, CA 90638
877-999-4728 (Toll Free) 714-523-0845 (fax)
www.isatsb.com

Rev. 9
08/03/18

Page
F12.2

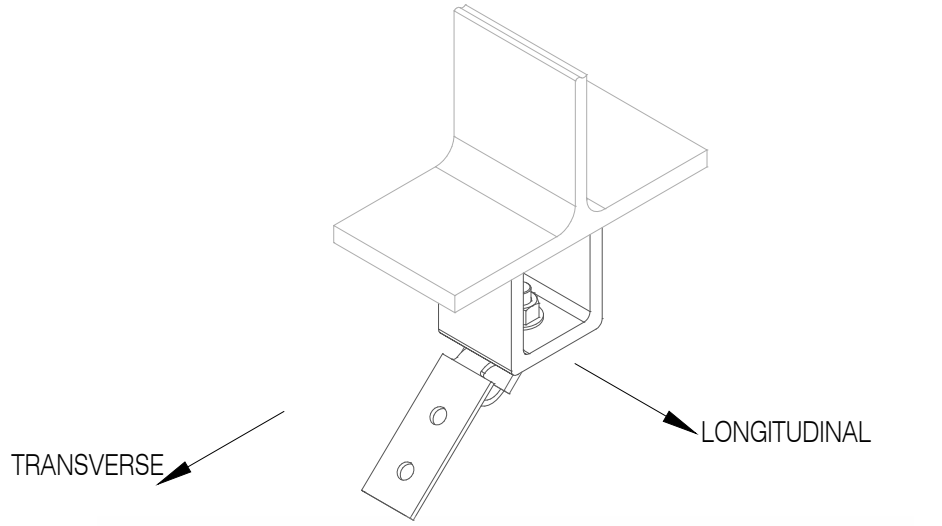

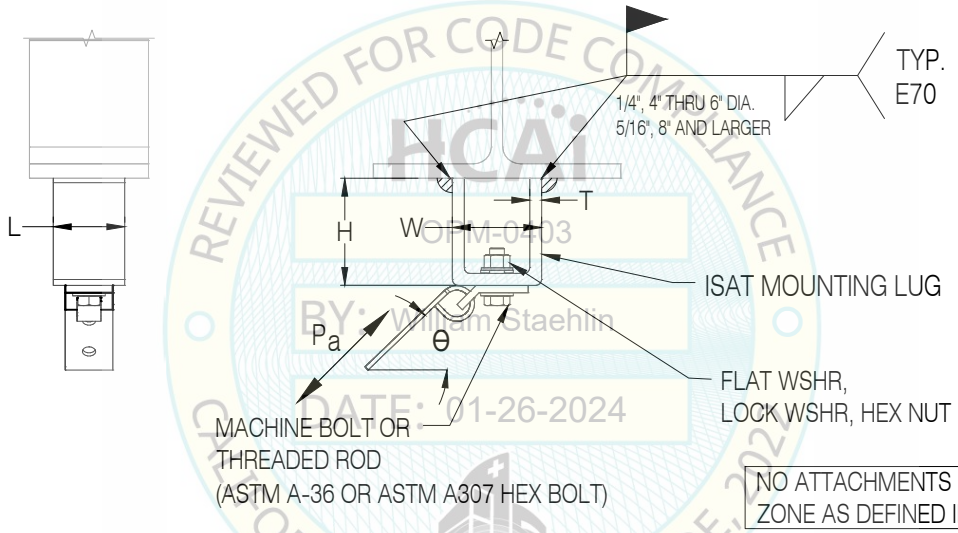

NO ATTACHMENTS IN PROTECTED ZONE AS DEFINED IN AISC 341

REVIEWED FOR CODE COMPLIANCE
HCAi
OPM-0403
BY: William Staehlin
DATE: 01-26-2024
CALIFORNIA BUILDING CODE, 2022

Mounting Lug Part Number	Maximum Brace Reaction (ASD)				Height "H" (in)	Length "L" (in)	Thickness "T" (in)	Width "W" (in)	Top Mounting Bolt Diameter (in)
	θ = 30° - 45° [2]		θ = 46° - 60° [2]						
	Transverse Pa (lbs)	Longitudinal Pa (lbs)	Transverse Pa (lbs)	Longitudinal Pa (lbs)					
LUGS	1,345	2,605	1,660	2,870	3	2 1/2	0.364	3	5/8
LUGL	2,100	3,600	2,640	4,185	4 1/2	3	0.500	3 3/4	5/8

1. Field drill-out to Vertical Support Rod Diameter +1/16" (except 5/8")
2. Installation Angle from Horizontal.

BEAM WELDED LUG

REGISTERED PROFESSIONAL ENGINEER
MARCIN WASAZNIK
S 6612
STRUCTURAL
STATE OF CALIFORNIA

ISAT
A Division of Tomarco Contractor Specialties
International Seismic Application Technology
14848 Northam Street, La Mirada, CA 90638
877-999-4728 (Toll Free) 714-523-0845 (fax)
www.isatsb.com

Rev. 10
08/03/18

Page
F13

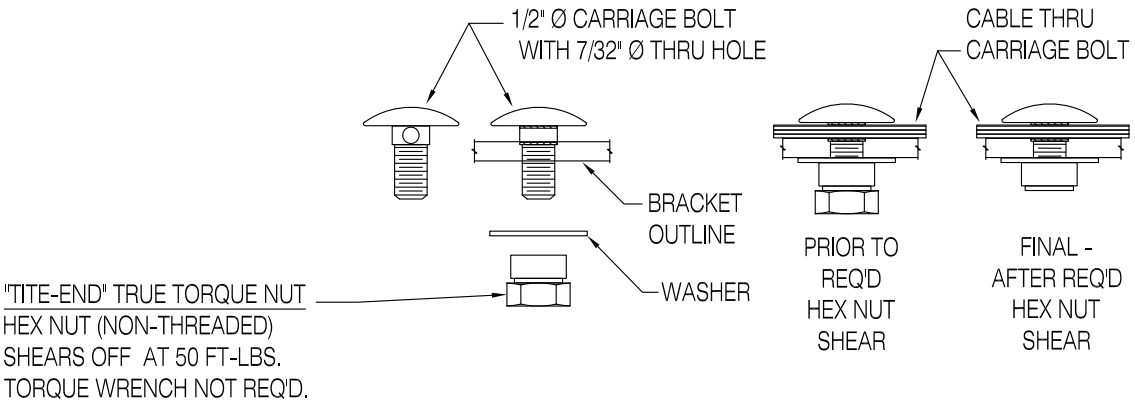

THRU HOLE CABLE TIE CARRIAGE BOLT WITH "TITE-END" TRUE TORQUE NUT

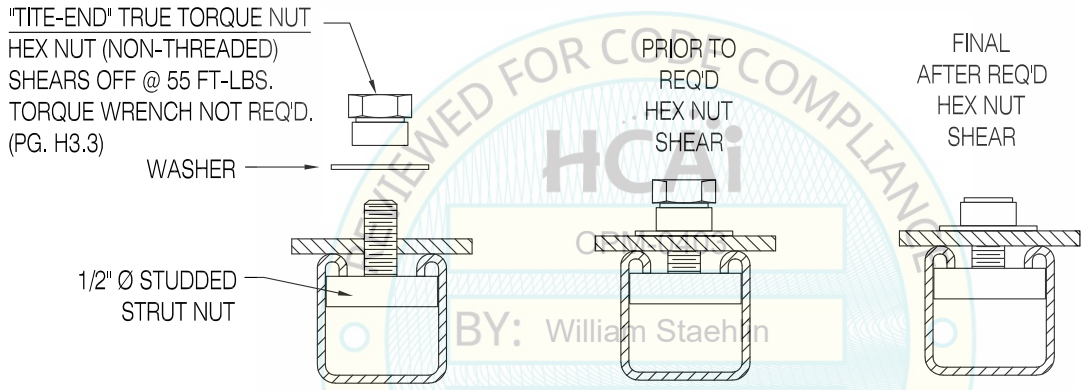

RIGID BRACE ARM ASSEMBLY WITH STUDDED STRUT NUT AND "TITE-END" TRUE TORQUE NUT

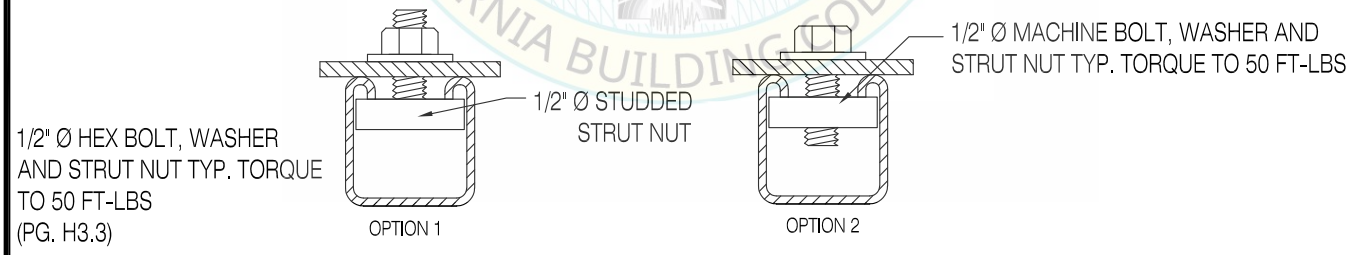

FOR USE WITH PAGE E1

STRUT NUT RIGID BRACE ASSEMBLY DETAILS

REVIEWED FOR CODE COMPLIANCE
HCAi
BY: William Staehlin
DATE: 01-26-2024
CALIFORNIA BUILDING CODE

REGISTERED PROFESSIONAL ENGINEER
MARCIN WASAZNIK
S 6612
STRUCTURAL
STATE OF CALIFORNIA

ISAT
A Division of Tomarco Contractor Specialties

International Seismic Application Technology
14848 Northam Street, La Mirada, CA 90638
877-999-4728 (Toll Free) 714-523-0845 (fax)
www.isatsb.com

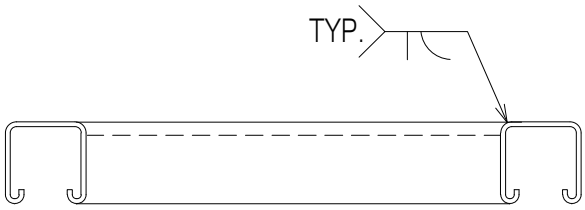

ELEVATION

TYP. USE ON:

D-SERIES
REFERENCES:
D1.4.1TZ2
D2.4.1TZ2
D1.4.1SD2
D2.4.1SD2

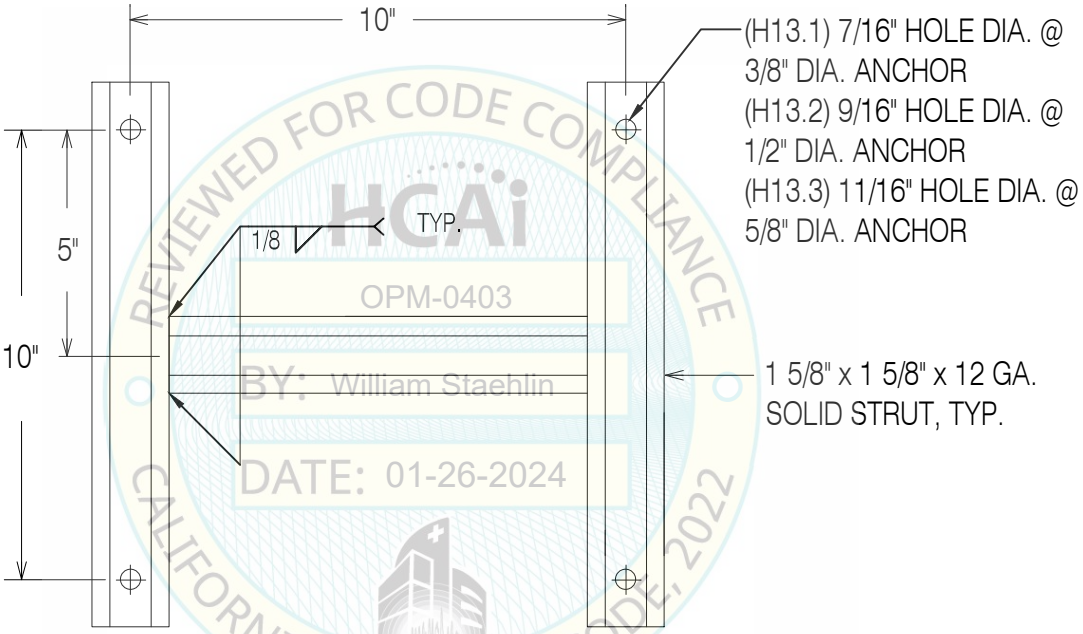

PLAN VIEW

REVIEWED FOR CODE COMPLIANCE
HCAi
OPM-0403
BY: William Staehlin
DATE: 01-26-2024
CALIFORNIA BUILDING CODE, 2022

4 BOLT H-BRACKET (HBRKT)

H-BRACKET #'s: H13.1; H13.2; H13.3

REGISTERED PROFESSIONAL ENGINEER
MARCIN WASAZNIK
S 6612
STRUCTURAL
STATE OF CALIFORNIA

ISAT
A Division of Tomarco Contractor Specialties

International Seismic Application Technology
14848 Northam Street, La Mirada, CA 90638
877-999-4728 (Toll Free) 714-523-0845 (fax)
www.isatsb.com

Rev. 11
08/31/23

Page
F15

TYP. USE ON:

D-SERIES REFERENCES:
D1.4TZ23
D1.4TZ24
D1.4SD23
D1.4SD24

G-SERIES REFERENCES:
G5.4TZ2
G5.4SD2

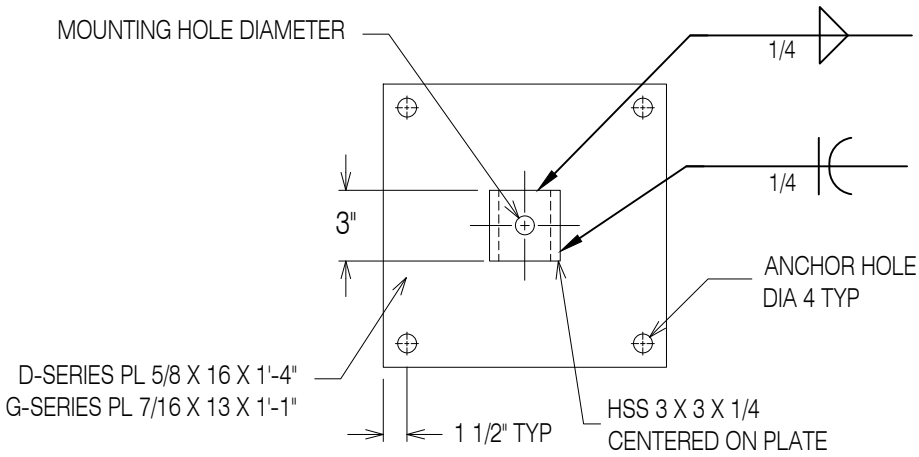

PLAN

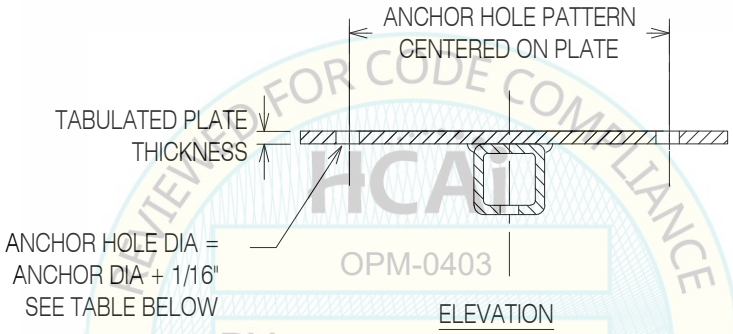

ELEVATION

REVIEWED FOR CODE COMPLIANCE
HCAi
OPM-0403
BY: William Staehlin
DATE: 01-26-2024
CALIFORNIA BUILDING CODE 2022

PLATE DETAILS FOR FORM POUR SLAB

Plate Number	Plate Thickness Inch	Anchor Diameter Inch	Anchor Hole Diameter Inch	Anchor Hole Pattern Inch	Mounting Hole Diameter Inch	Mounting Bolt Diameter Inch
D-Series Seismic Brace Connections						
D134	5/8	3/8	7/16	13 x 13	9/16	1/2
D145	5/8	1/2	9/16	13 x 13	11/16	5/8
D155	5/8	5/8	11/16	13 x 13	11/16	5/8
G-Series Vertical Support Connections						
G535	7/16	3/8	7/16	10 x 10	11/16	5/8
G545	7/16	1/2	9/16	10 x 10	11/16	5/8
G546	7/16	1/2	9/16	10 x 10	13/16	3/4
G547	7/16	1/2	9/16	10 x 10	15/16	7/8
G557	7/16	5/8	11/16	10 x 10	15/16	7/8

4-BOLT ANCHOR PLATE, FORM POUR SLAB

REGISTERED PROFESSIONAL ENGINEER MARCIN WASAZNIK S 6612 STRUCTURAL STATE OF CALIFORNIA

ISAT
A Division of Tomarco Contractor Specialties
International Seismic Application Technology
14848 Northam Street, La Mirada, CA 90638
877-999-4728 (Toll Free) 714-523-0845 (fax)
www.isatsb.com

Rev. 11
08/31/23

Page
F17

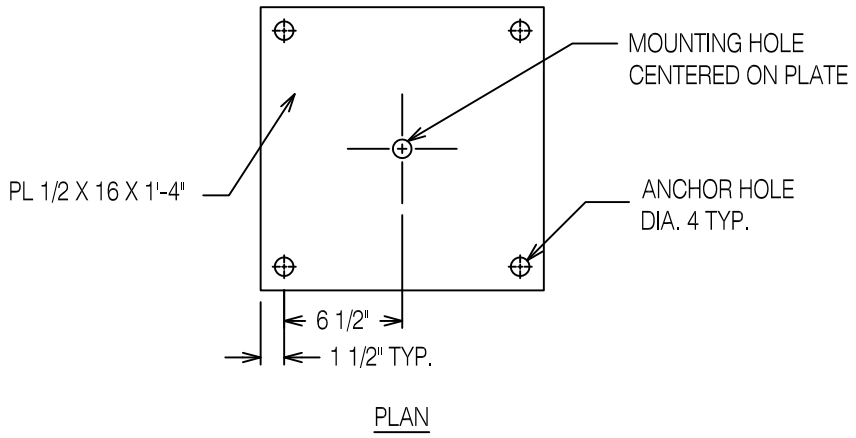

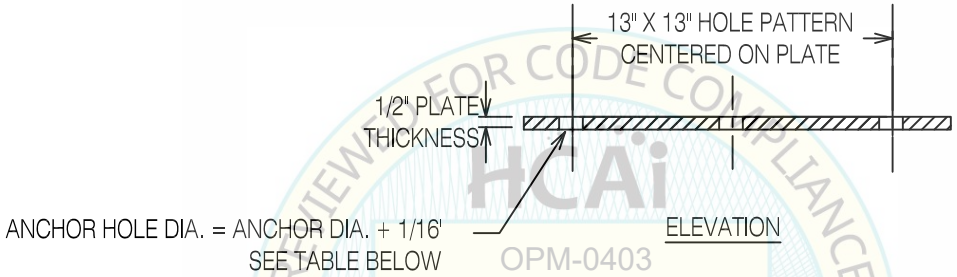

REVIEWED FOR CODE COMPLIANCE
HCAi
OPM-0403
BY
DATE 01-26-2024
CALIFORNIA BUILDING CODE 2022

PLATE DETAILS FOR METAL DECK SLAB

Plate Number	Plate Thickness Inch	Anchor Diameter Inch	Anchor Hole Diameter Inch	Anchor Hole Pattern Inch	Mounting Hole Diameter Inch	Mounting Bolt Diameter Inch
D-Series Seismic Brace Connections						
D243	1/2	3/8	7/16	13 x 13	9/16	1/2
D244	1/2	1/2	9/16	13 x 13	9/16	1/2
D245	1/2	1/2	9/16	13 x 13	11/16	5/8
D255	1/2	5/8	11/16	13 x 13	11/16	5/8
G-Series Vertical Support Connections						
G634	1/2	3/8	7/16	13 x 13	9/16	1/2
G644	1/2	1/2	9/16	13 x 13	9/16	1/2
G645	1/2	1/2	9/16	13 x 13	11/16	5/8
G646	1/2	1/2	9/16	13 x 13	13/16	3/4
G656	1/2	5/8	11/16	13 x 13	13/16	3/4
G657	1/2	5/8	11/16	13 x 13	15/16	7/8

4-BOLT ANCHOR PLATE, METAL DECK SLAB

ISAT
A Division of Tomarco Contractor Specialties
International Seismic Application Technology
14848 Northam Street, La Mirada, CA 90638
877-999-4728 (Toll Free) 714-523-0845 (fax)
www.isatsb.com

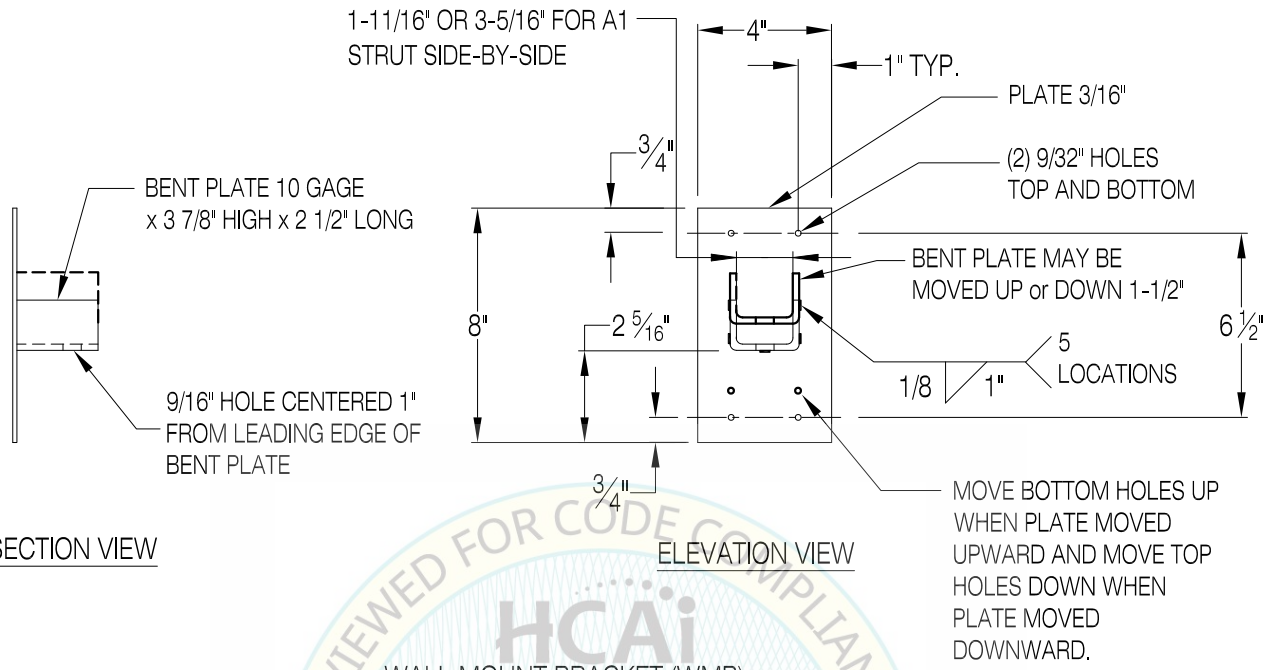

WALL MOUNT BRACKET (WMB)

REVIEWED FOR CODE COMPLIANCE
HCAi
OPM-0403
BY: William Staehlin
DATE: 01-26-2024
CALIFORNIA BUILDING CODE 2022

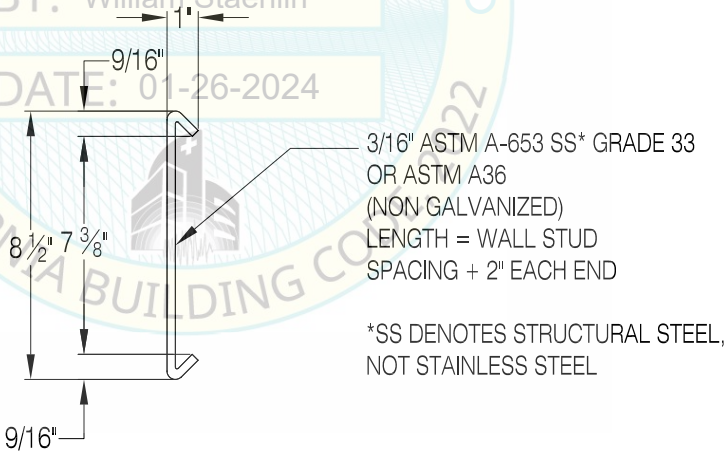

WALL MOUNTING PLATE (WMP)

WALL MOUNT BRACKET (WMB) AND WALL MOUNTING PLATE (WMP) DETAILS

REGISTERED PROFESSIONAL ENGINEER
MARCIN WASAZNIK
S 6612
STRUCTURAL
STATE OF CALIFORNIA

ISAT
A Division of Tomarco Contractor Specialties

International Seismic Application Technology
14848 Northam Street, La Mirada, CA 90638
877-999-4728 (Toll Free) 714-523-0845 (fax)
www.isatsb.com

Rev. 10
03/21/18

Page
F20

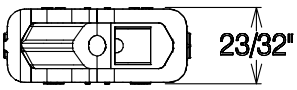

PLAN VIEW

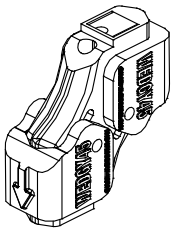

ISOMETRIC

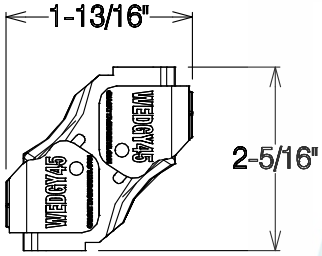

SIDE VIEW

WEDGY45

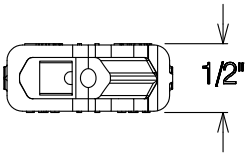

PLAN VIEW

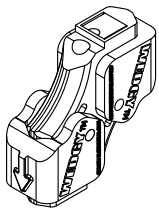

ISOMETRIC

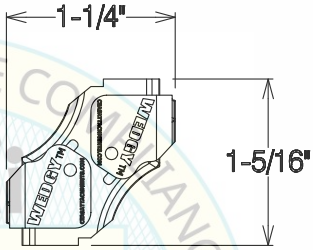

SIDE VIEW

WEDGY23

REVIEWED FOR CODE COMPLIANCE
HCAI
OPM-0403
BY: William Staehlin
DATE: 01-26-2024
CALIFORNIA BUILDING CODE, 2019

TYPE OF WEDGY	ALLOWABLE CAPACITY (ASD)
WEDGY 45 [1]	1485 LBS
WEDGY 23 [2]	773 LBS

1. FOR USE WITH 3/16"Ø ASTM A1023 GALVANIZED STEEL CABLE (7x19)
2. FOR USE WITH 1/8"Ø ASTM A1023 GALVANIZED STEEL CABLE (7x19)
3. FACTOR OF SAFETY: 1.5

PATENT PENDING

WEDGY23 & WEDGY45

ISAT
A Division of Tomarco Contractor Specialties
International Seismic Application Technology
14848 Northam Street, La Mirada, CA 90638
877-999-4728 (Toll Free) 714-523-0845 (fax)
www.isatsb.com

Rev. 9
04/24/18

Page
F24

INDEX - VERTICAL SUPPORT SYSTEM DETAILS

PAGE	DESCRIPTION
	G1. ROD STIFFENING TRAPEZE LOADS & SPRING HANGERS
G1	ROD STIFFENING REQUIREMENTS
G1.1	EMT ROD STIFFENING REQUIREMENTS
G1.2	EMT ROD STIFFENING REQUIREMENTS
G1.3	ROD STIFFENING REQUIREMENTS @ ISOLATOR
G2	STRUT CHANNEL MAXIMUM TRAPEZE VERTICAL LOADS
G2.1	STRUCTURAL STEEL TRAPEZE MAXIMUM VERTICAL LOADS
G3	GENERAL TRAPEZE NOTES
G3.1	B1 STRUT CHANNEL - TOTAL UNIFORM LOAD
G3.2	B2 STRUT CHANNEL - TOTAL UNIFORM LOAD
G3.3	TRIPLE B1 STRUT WITH CONNECTOR PLATE - TOTAL UNIFORM LOAD
G3.4	TRIPLE B1 STRUT WITH C CHANNEL CONNECTOR - TOTAL UNIFORM LOAD
G3.5	TRIPLE B1 STRUT CONNECTOR DETAILS
G4.1K	SPRING HANGER ATTACHMENT TO CONCRETE
G4.2K	SPRING HANGER ATTACHMENT TO FORM POUR SLAB WITH 3000 PSI MIN. NWC
G4.3K	SPRING HANGER ATTACHMENT TO STEEL FRAMING
	G2. CONNECTIONS TO FORM POUR
	A. POURED-IN-PLACE INSERTS (PIP)
	BLUE BANGER HANGER POURED-IN PLACE (PIP) DECK INSERTS
G5.1B	SINGLE "PIP"; 3,000 THRU 6,000 PSI CONCRETE
G5.2B	DUAL "PIP", B1 STRUT; 3,000 THRU 6,000 PSI CONCRETE
G5.3B	DUAL "PIP", B2 STRUT; 3,000 THRU 6,000 PSI CONCRETE
	BABY BLUE BANGER HANGER POURED-IN PLACE (PIP) DECK INSERTS
G5.1BB	SINGLE "PIP"; 3,000 THRU 6,000 PSI CONCRETE
G5.2BB	DUAL "PIP", B1 STRUT; 3,000 THRU 6,000 PSI CONCRETE
	PUSH ROD POURED-IN PLACE (PRPIP) DECK INSERTS
G5.1PR	SINGLE "PRPIP"; 3,000 THRU 6,000 PSI CONCRETE
G5.2PR	DUAL "PRPIP", B1 STRUT; 3,000 THRU 6,000 PSI CONCRETE
G5.3PR	DUAL "PRPIP", B2 STRUT; 3,000 THRU 6,000 PSI CONCRETE
	B. POST INSTALLED CONCRETE ANCHORS (NWC)
	HILTI KWIK BOLT TZ2 EXPANSION ANCHOR
	SINGLE-ANCHOR CONNECTIONS
G5.1TZ23	3,000 PSI NWC
G5.1TZ24	4,000 PSI NWC
	DUAL ANCHOR CONNECTIONS
G5.2TZ2	B1 STRUT CONNECTOR; 3,000 PSI NWC
G5.3TZ2	B2 STRUT CONNECTOR; 3,000 PSI NWC
	FOUR BOLT ANCHOR CONNECTIONS
G5.4TZ2	FOUR BOLT ANCHOR PLATE CONNECTION DETAILS
	HILTI KWIK HUS-EZ CONCRETE SCREW ANCHOR
	DUAL ANCHOR, B1 STRUT CONNECTOR
G5.2HUS3	3,000 PSI CONCRETE
G5.2HUS4	4,000 PSI CONCRETE

REVIEWED FOR CODE COMPLIANCE
HCAi
OPM-0403
BY: William Staehlin
DATE: 01-26-2024
CALIFORNIA BUILDING CODE 2022

REGISTERED PROFESSIONAL ENGINEER
MARCIN WASAZNIK
S 6612
STRUCTURAL
STATE OF CALIFORNIA

ISAT
A Division of Tomarco Contractor Specialties

International Seismic Application Technology
14848 Northam Street, La Mirada, CA 90638
877-999-4728 (Toll Free) 714-523-0845 (fax)
www.isatsb.com

Rev. 10
01/25/24
Page
G0.1

INDEX - VERTICAL SUPPORT SYSTEM DETAILS (CONTINUED)

PAGE	DESCRIPTION
	CONNECTIONS TO FORM POUR (CONTINUED)
	POWERS POWER-STUD+ SD2 WEDGE EXPANSION ANCHOR
	SINGLE ANCHOR CONNECTIONS
G5.1SD23	3,000 PSI NWC
G5.1SD24	4,000 PSI NWC
	DUAL ANCHOR CONNECTIONS
G5.2SD2	B1 STRUT CONNECTOR; 3,000 PSI NWC
G5.3SD2	B2 STRUT CONNECTOR; 3,000 PSI NWC
	FOUR BOLT ANCHOR CONNECTIONS
G5.4SD2	FOUR BOLT ANCHOR PLATE CONNECTION DETAILS
	DEWALT SNAKE+ INTERNALLY THREADED SCREW ANCHOR
G5.1SN	SINGLE ANCHOR CONNECTION
G5.2SN	DUAL ANCHOR CONNECTION
	POWERS VERTIGO+ ROD HANGER SCREW ANCHOR
G5.1VRT3	3,000 PSI NWC
G5.1VRT4	4,000 PSI NWC
	DEWALT HANGERMATE+ VERTIGO CONCRETE SCREW ANCHOR
	SINGLE ANCHOR CONNECTIONS
G5.1HMT3	3,000 PSI NWC
G5.1HMT4	4,000 PSI NWC
	POWERS WEDGE-BOLT+ CONCRETE SCREW ANCHOR
	DUAL ANCHOR, B1 STRUT CONNECTOR
G5.2WB3	3,000 PSI NWC
G5.2WB4	4,000 PSI NWC
	DEWALT SCREW-BOLT+ CONCRETE SCREW ANCHOR
	DUAL ANCHOR, B1 STRUT CONNECTOR
G5.2DSB3	3,000 PSI NWC
G5.2DSB4	4,000 PSI NWC
	G3. CONNECTIONS TO METAL PAN DECKS, LIGHT/NORMAL WEIGHT CONCRETE (LWC/NWC)
G6.0	METAL PAN DECK ANCHOR SPACING
	A. STEEL DECK INSERTS (SDI)
	BLUE BANGER HANGER STEEL DECK INSERT (SDI)
G6.1B	SINGLE “SDI”; 3,000 THRU 4,000 PSI CONCRETE
G6.2B	SINGLE “SDI”; EXTENDED BASE PLATE
G6.3B	DUAL “SDI”; B1 STRUT CONNECTOR
G6.4B	DUAL “SDI”; B2 STRUT CONNECTOR

REVIEWED FOR CODE COMPLIANCE
HCAi
OPM-0403
BY: William Staehlin
DATE: 01-26-2024
CALIFORNIA BUILDING CODE 2022

REGISTERED PROFESSIONAL ENGINEER
MARCIN WASAZNIK
S-6612
STRUCTURAL
STATE OF CALIFORNIA

ISAT
A Division of Tomarco Contractor Specialties

International Seismic Application Technology
14848 Northam Street, La Mirada, CA 90638
877-999-4728 (Toll Free) 714-523-0845 (fax)
www.isatsb.com

INDEX - VERTICAL SUPPORT SYSTEM DETAILS (CONTINUED)

PAGE	DESCRIPTION
	HEADED BOLT (SDI-HB)
	SINGLE "SDI-HB" CONNECTIONS
G6.1HB3	3,000 PSI LWC
G6.1HB4	4,000 PSI LWC
G6.2HB	DUAL "SDI-HB"; 3,000 PSI LWC
	PUSH ROD STEEL DECK INSERTS (PRSDI)
G6.1PR	SINGLE "PRSDI"; 3,000 THRU 4,000 PSI CONCRETE
G6.3PR	DUAL "PRSDI"; B1 STRUT CONNECTOR
G6.4PR	DUAL "PRSDI"; B2 STRUT CONNECTOR
	CONNECTIONS TO METAL PAN DECKS, LIGHT/NORMAL WEIGHT CONCRETE (LWC/NWC)
	B. POST INSTALLED CONCRETE ANCHORS
	HILTI KWIK BOLT TZ2 EXPANSION ANCHOR
	SINGLE ANCHOR CONNECTIONS
G6.1TZ23	3,000 PSI LWC/NWC
G6.1TZ24	4,000 PSI LWC/NWC
G6.1TZ2B	3,000 PSI LWC/NWC, B DECK
	DUAL ANCHOR CONNECTIONS
G6.2TZ2	B1 STRUT CONNECTOR
G6.2TZ2B	B1 STRUT CONNECTOR, B DECK
G6.3TZ2	B2 STRUT CONNECTOR
G6.4TZ2	B2 STRUT CONNECTOR, LONG SPAN
G6.5TZ2	HSS CONNECTOR
G6.6TZ2	B2 STRUT, MULTIPLE RODS
	TRIPLE ANCHOR CONNECTIONS
G6.7TZ2	B2 STRUT CONNECTOR
	FOUR BOLT ANCHOR CONNECTION DETAILS
G6.8TZ2	FOUR BOLT ANCHOR PLATE CONNECTION DETAILS
	HILTI KWIK HUS-EZ CONCRETE SCREW ANCHOR
	DUAL ANCHOR, B1 STRUT CONNECTOR
G6.2HUS3	3,000 PSI LWC/NWC
G6.2HUS4	4,000 PSI LWC/NWC
	POWERS POWER-STUD+ SD2 WEDGE EXPANSION ANCHOR
	SINGLE ANCHOR CONNECTIONS
G6.1SD23	3,000 PSI LWC/NWC
G6.1SD24	4,000 PSI LWC/NWC
G6.1SD2B	3,000 PSI LWC/NWC, B DECK
G6.1SD2S	3,000 PSI LWC/NWC, SHALLOW TOPPING SLAB
G6.1SD2S4	4,000 PSI LWC/NWC, SHALLOW TOPPING SLAB

REVIEWED FOR CODE COMPLIANCE
HCAi
OPM-0403
BY: William Staehlin
DATE: 01-26-2024
CALIFORNIA BUILDING CODE 2022

REGISTERED PROFESSIONAL ENGINEER
MARCIN WASAZNIK
S-6612
STRUCTURAL
STATE OF CALIFORNIA

ISAT
A Division of Tomarco Contractor Specialties

International Seismic Application Technology
14848 Northam Street, La Mirada, CA 90638
877-999-4728 (Toll Free) 714-523-0845 (fax)
www.isatsb.com

INDEX - VERTICAL SUPPORT SYSTEM DETAILS (CONTINUED)

PAGE	DESCRIPTION
	CONNECTIONS TO METAL PAN DECKS, LIGHT/NORMAL WEIGHT CONCRETE (LWC/NWC) (CONTINUED)
	DUAL ANCHOR CONNECTIONS
G6.2SD2	B1 STRUT CONNECTOR
G6.2SD2B	B1 STRUT CONNECTOR, B DECK
G6.2SD2S	B1 STRUT CONNECTOR, SHALLOW TOPPING SLAB
G6.3SD2	B2 STRUT CONNECTOR
G6.4SD2	B2 STRUT CONNECTOR, LONG SPAN
G6.5SD2	HSS CONNECTOR
G6.6SD2	B2 STRUT, MULTIPLE RODS
	TRIPLE ANCHOR CONNECTIONS
G6.7SD2	B2 STRUT CONNECTOR
	FOUR BOLT ANCHOR CONNECTION DETAILS
G6.8SD2	FOUR BOLT ANCHOR PLATE CONNECTION DETAILS
	DEWALT SNAKE+ INTERNALLY THREADED SCREW ANCHOR
G6.1SN	SINGLE ANCHOR CONNECTIONS
G6.2SN	DUAL ANCHOR CONNECTION
	POWERS VERTIGO+ ROD HANGER SCREW ANCHOR
G6.1VRT3	3,000 PSI NWC
G6.1VRT4	4,000 PSI NWC
G6.1VRTB	3,000 PSI LWC/NWC, B DECK
	DEWALT HANGERMATE+ CONCRETE SCREW ANCHOR
	SINGLE ANCHOR CONNECTIONS
G6.1HMT3	3,000 PSI LWC/NWC
G6.1HMT4	4,000 PSI LWC/NWC
G6.1HMTB	3,000 PSI LWC/NWC, B DECK
	POWERS WEDGE-BOLT+ CONCRETE SCREW ANCHOR
	DUAL ANCHOR, B1 STRUT CONNECTOR
G6.2WB3	3,000 PSI NWC
G6.2WB4	4,000 PSI NWC
	DEWALT SCREW-BOLT+ CONCRETE SCREW ANCHOR
	DUAL ANCHOR, B1 STRUT CONNECTOR
G6.2DSB3	3,000 PSI LWC/NWC
G6.2DSB4	4,000 PSI LWC/NWC

REVIEWED FOR CODE COMPLIANCE
HCAi
OPM-0403
BY: William Staehlin
DATE: 01-26-2024
CALIFORNIA BUILDING CODE, 2022

REGISTERED PROFESSIONAL ENGINEER
MARCIN WASAZNIK
S-6612
STRUCTURAL
STATE OF CALIFORNIA

ISAT
A Division of Tomarco Contractor Specialties

International Seismic Application Technology
14848 Northam Street, La Mirada, CA 90638
877-999-4728 (Toll Free) 714-523-0845 (fax)
www.isatsb.com

INDEX - VERTICAL SUPPORT SYSTEM DETAILS (CONTINUED)

PAGE	DESCRIPTION
	CONNECTIONS TO METAL PAN DECKS, LIGHT/NORMAL WEIGHT CONCRETE (LWC/NWC) (CONTINUED)
	G4. CONNECTIONS TO STEEL STRUCTURE
G7.1	WIDE FLANGE BEAM SUPPLEMENTAL STEEL
G7.2	C2 STRUT VERTICAL SUPPORT
G7.3	B2 STRUT VERTICAL SUPPORT
G7.4	(2) C2X8.2 STEEL CHANNEL VERTICAL SUPPORT
G7.4.1	(2) C4.5X5.4 STEEL CHANNEL VERTICAL SUPPORT
G7.5	"H" SHAPE 1 5/8' X 1 5/8" BACK TO BACK STRUT
G7.10	BC-4 BEAM CLAMP
G7.10.1	BC-5 BEAM CLAMP
G7.11	BC-4 BEAM CLAMP – CANTILEVERED
G7.11.1	BC-5 BEAM CLAMP – CANTILEVERED
G7.12	IN LINE WITH OPEN WEB STEEL JOIST
G7.13	WELDED LUG TO WIDE FLANGE BEAM
G7.13.1	BEAM CLAMP ATTACHMENT TO WIDE FLANGE BEAM
G7.14	HSS 3X3 SUPPLEMENTAL STEEL
G7.15	STRUT CONNECTION TO STEEL BAR JOIST
G7.16	STRUCTURAL ANGLE AT STEEL BAR JOIST
G7.17	ROOF DECK VERTICAL SUPPORT ATTACHMENT
G7.19	4 INCH TUBE FRAMING CLAMP SYSTEM
G7.19.1	3 INCH TUBE FRAMING CLAMP SYSTEM
	G5. CONNECTIONS TO WOOD STRUCTURE
G8.30	THRU BOLT VERTICAL SUPPORT TO STRUCTURAL LUMBER
G8.31	LAG SCREW VERTICAL SUPPORT TO STRUCTURAL LUMBER
G8.32	THRU BOLT VERTICAL SUPPORT TO TJI WOOD JOIST
	G6. MISCELLANEOUS CONNECTIONS
G10.1	ROOF DECK INSERT (RDI)

APPROVED FOR CODE COMPLIANCE
HCAI
OPM-0403
BY: William Staehlin
DATE: 01/26/2024
CALIFORNIA BUILDING CODE, 2022

REGISTERED PROFESSIONAL ENGINEER
MARCIN WASAZNIK
S-6612
STRUCTURAL
STATE OF CALIFORNIA

ISAT
A Division of Tomarco Contractor Specialties

International Seismic Application Technology
14848 Northam Street, La Mirada, CA 90638
877-999-4728 (Toll Free) 714-523-0845 (fax)
www.isatsb.com

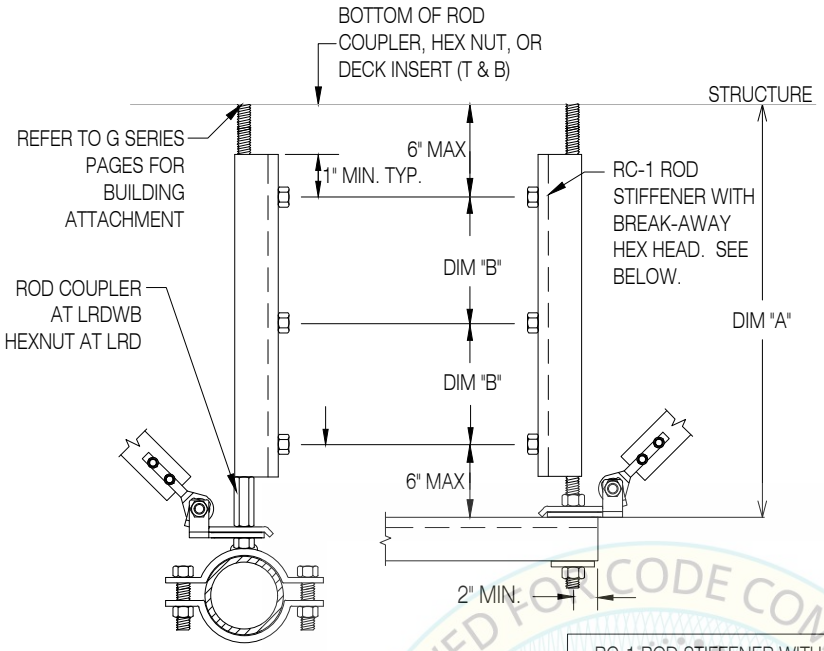

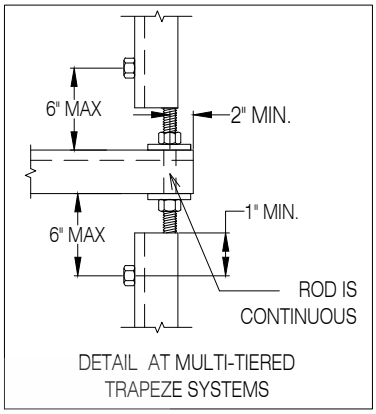

Rod Stiffener Chart			
Threaded Rod Diameter (in.)	Dim. A Maximum Rod Length Without Stiffener (in.)	Dim. B Maximum Spacing Between Rod Stiffeners (in.)	Maximum Compressive Force (lbs)
3/8	16	28	380
1/2	18	38	985
5/8	24	48	1,385
3/4	30	57	1,895
7/8	40	40	2,010
1	46	46	2,605
1 1/8	54	N/A	3,015
1 1/4	58	N/A	4,110
1 3/8	66	N/A	4,565
1 1/2	72	N/A	5,585

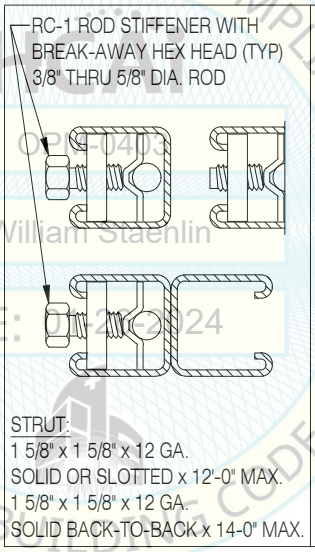

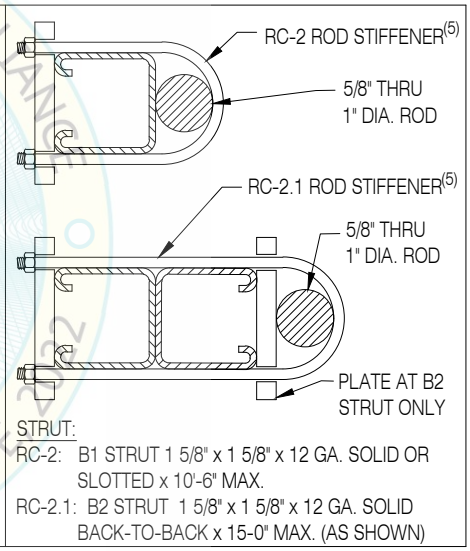

REVIEWED FOR CODE COMPLIANCE
ISAT
OPM-0403
BY: William Staehlin
DATE: 01-26-2024
CALIFORNIA BUILDING CODE 2022

1. ROD STIFFENING REQUIRED ONLY FOR HANGER RODS TO WHICH SEISMIC BRACING HAS BEEN INSTALLED OR WITHIN 12" OF DIAGONAL COMPONENT OF THE BRACING SYSTEM.
2. TIGHTEN RC-1 STIFFENER NUT TO FINGER TIGHT THEN WRENCH TIGHT TILL HEX HEAD BREAKS OFF (2 FULL TURNS, 35 FT-LBS APPROXIMATE).
3. ROD STIFFENERS MAY BE ELIMINATED WHERE TWO RIGID BRACES ARE ATTACHED TO THE SAME ROD AND ARE 180 DEGREES OPPOSED TO ONE ANOTHER.
4. NO STIFFENING ON RODS GREATER THAN 1" IN DIAMETER.
5. MINIMUM OF (3) STIFFENER CLIPS REQUIRED PER ASSEMBLY AS DEPICTED IN DETAIL ABOVE. STIFFENER CLIPS TO BE EQUALLY SPACED (±1").

ROD STIFFENING REQUIREMENTS

REGISTERED PROFESSIONAL ENGINEER MARCIN WASAZNIK S-6612 STRUCTURAL STATE OF CALIFORNIA

ISAT
A Division of Tomarco Contractor Specialties

International Seismic Application Technology
14848 Northam Street, La Mirada, CA 90638
877-999-4728 (Toll Free) 714-523-0845 (fax)
www.isatsb.com

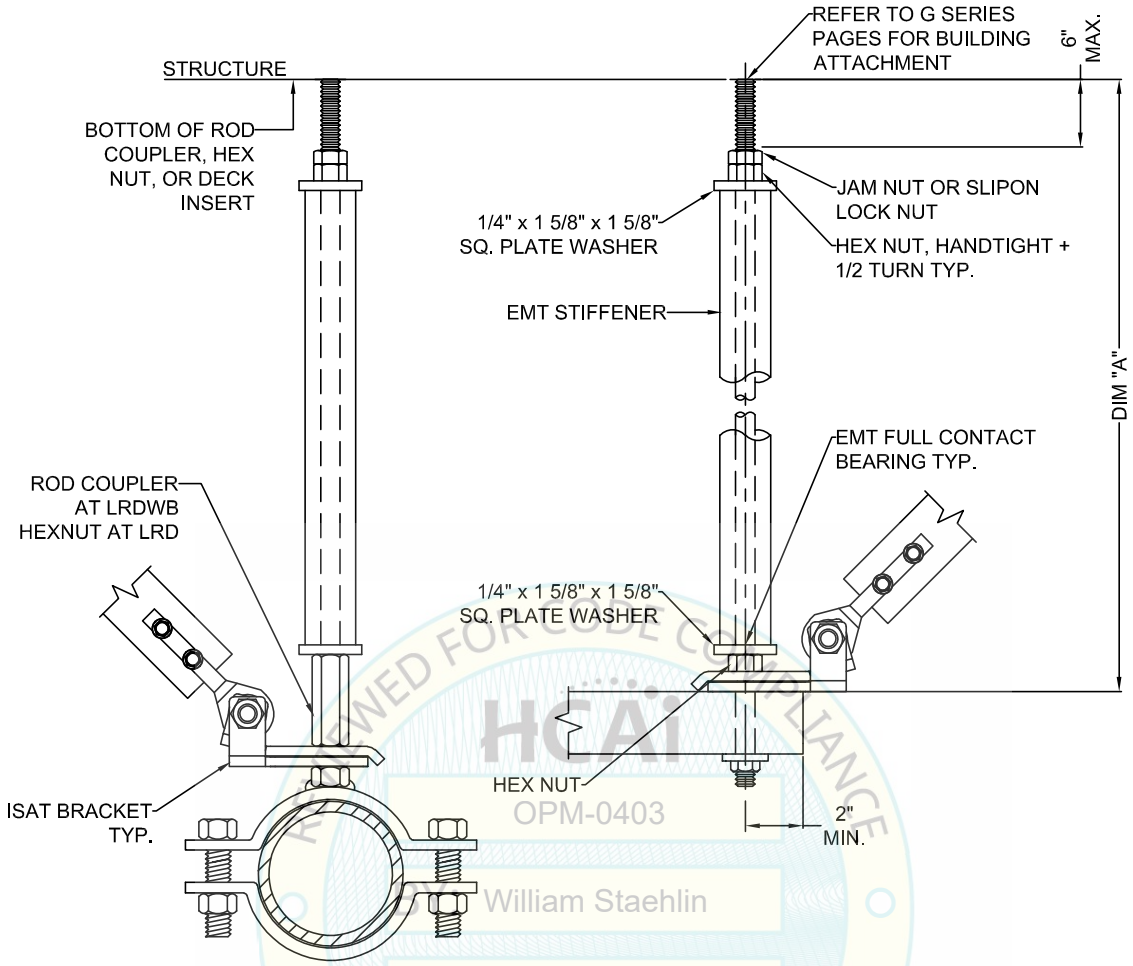

HCAi
OPM-0403
William Staehlin
DATE: 01-26-2024
REVIEWED FOR CODE COMPLIANCE
CALIFORNIA BUILDING CODE, 2022

ROD STIFFENING EXCLUSION REQUIREMENTS		
THREADED ROD DIAMETER (in)	DIM. "A" MAXIMUM ROD LENGTH WITHOUT STIFFENER (in)	MAXIMUM COMPRESSIVE FORCE (lbs)
3/8"	16	380
1/2"	18	985
5/8"	24	1385
3/4"	30	1895
7/8"	40	2010
1"	46	2605
1 1/8"	54	3015
1 1/4"	58	4110
1 3/8"	66	4565
1 1/2"	72	5585

EMT SIZE (in)	DIM. "A" MAXIMUM LENGTH (in)	MAXIMUM COMPRESSIVE FORCE (lbs)
1/2"	18	1505
	30	775
	42	395
3/4"	36	1415
	48	805
	60	515
1"	54	1500
	72	845
	90	540
1 1/4"	78	1830
	108	955
	144	535

1. ROD STIFFENING REQUIRED ONLY FOR HANGER RODS TO WHICH SEISMIC BRACING HAS BEEN INSTALLED.
2. ROD STIFFENERS MAY BE ELIMINATED WHERE TWO RIGID BRACES ARE ATTACHED TO THE SAME ROD AND ARE 180 DEGREES OPPOSED TO ONE ANOTHER.

EMT ROD STIFFENING REQUIREMENTS

REGISTERED PROFESSIONAL ENGINEER MARCIN WASAZNIK S-6612 STRUCTURAL STATE OF CALIFORNIA

ISAT
A Division of Tomarco Contractor Specialties
International Seismic Application Technology
14848 Northam Street, La Mirada, CA 90638
877-999-4728 (Toll Free) 714-523-0845 (fax)
www.isatsb.com

Rev. 1
02/11/19

Page
G1.1

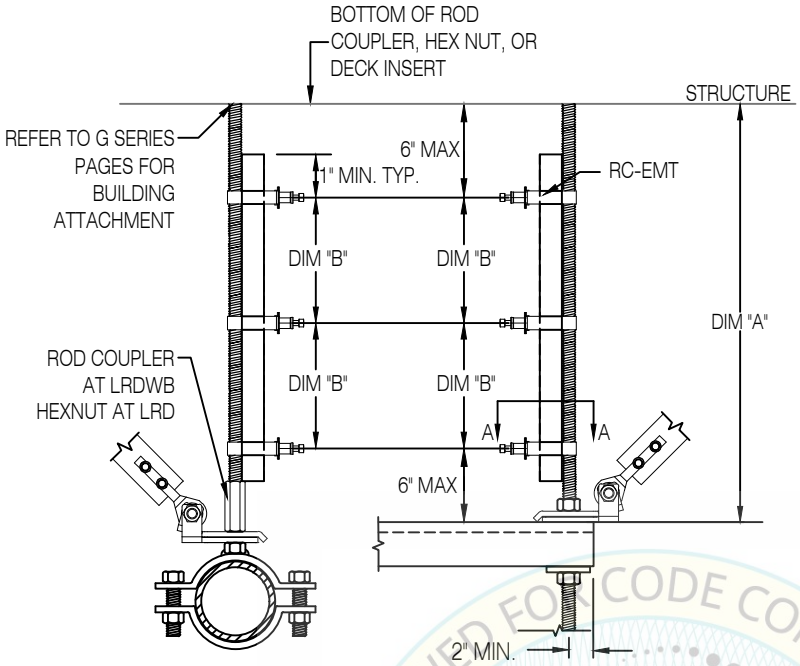

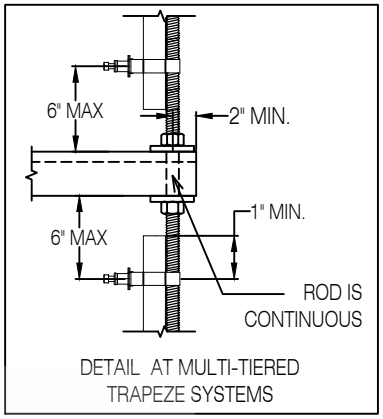

REVIEWED FOR CODE COMPLIANCE
HCAi
OPM-0403
BY: William Staehlin
DATE: 01-26-2024
CALIFORNIA BUILDING CODE, 2022

Rod Stiffener Chart				
Threaded Rod Diameter (in.)	Dim. A Maximum Rod Length Without Stiffener (in.)	Dim. A Maximum Rod Length With Stiffener (in.)	Dim. B Maximum Spacing Between Rod Stiffeners (in.)	Maximum Compressive Force (lbs)
3/8	16	156	28	380
1/2	18	132	38	985
5/8	24	120	48	1,385
3/4	30	108	57	1,895
7/8	40	108	40	2,010
1	46	84	46	2,605

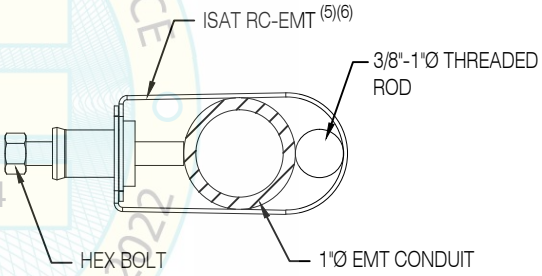

SECTION A-A

1. ROD STIFFENING REQUIRED ONLY FOR HANGER RODS TO WHICH SEISMIC BRACING HAS BEEN INSTALLED OR WITHIN 12" OF DIAGONAL COMPONENT OF THE BRACING SYSTEM.
2. TIGHTEN HEX BOLT FINGER TIGHT PLUS ONE FULL TURN.
3. ROD STIFFENERS MAY BE ELIMINATED WHERE TWO RIGID BRACES ARE ATTACHED TO THE SAME ROD AND ARE 180 DEGREES OPPOSED TO ONE ANOTHER.
4. NO STIFFENING ON RODS GREATER THAN 1" IN DIAMETER.
5. MINIMUM OF (3) STIFFENER CLIPS REQUIRED PER ASSEMBLY AS DEPICTED IN DETAIL ABOVE. STIFFENER CLIPS TO BE EQUALLY SPACED (±1").
6. MATERIAL: ASTM A1008 CS, FINISH: ELECTROGALVANIZED ZINC COATING.

EMT ROD STIFFENING REQUIREMENTS

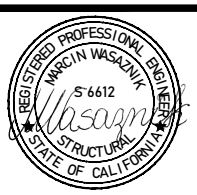

ISAT
A Division of Tomarco Contractor Specialties
International Seismic Application Technology
14848 Northam Street, La Mirada, CA 90638
877-999-4728 (Toll Free) 714-523-0845 (fax)
www.isatsb.com

Rev. 1
12/05/19

Page
G1.2

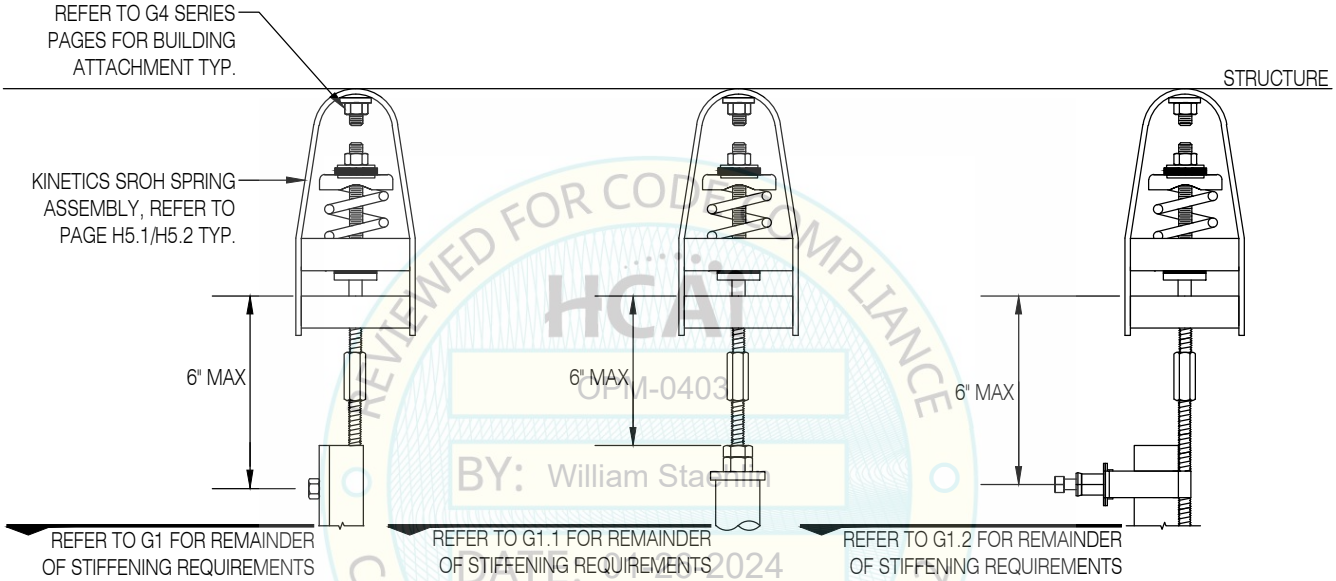

REVIEWED FOR CODE COMPLIANCE
HCAI
OPM-0403
BY: William Staehlin
DATE: 01-26-2024
CALIFORNIA BUILDING CODE, 2022

NOTES:

1. REFER TO G4.1K, G4.2K OR G4.3K FOR SPRING INSTALLATION GUIDELINES.

ROD STIFFENING REQUIREMENTS @ ISOLATOR

REGISTERED PROFESSIONAL ENGINEER
MARCIN WASAZNIK
S 6612
STRUCTURAL
STATE OF CALIFORNIA

ISAT
A Division of Tomarco Contractor Specialties

International Seismic Application Technology
14848 Northam Street, La Mirada, CA 90638
877-999-4728 (Toll Free) 714-523-0845 (fax)
www.isatsb.com

Rev. 0
10/09/18

Page
G1.3

STRUT CHANNEL
MAXIMUM TRAPEZE VERTICAL LOADS [1, 5]

"A1" SINGLE CHANNEL (1 5/8" X 13/16" X 12 GA)

MAXIMUM TOTAL UNIFORM LOAD				
MAXIMUM SPAN Inch	SOLID CHANNEL Lbs	PUNCHED HOLES Lbs	SHORT SLOTS CHANNEL Lbs	DEFLECTION Inch
18	560	510	480	0.05
24	420	380	360	0.09
36	280	250	240	0.19
48	210	190	180	0.34

"A2" BACK TO BACK CHANNEL [3] (1 5/8" X 13/16" X 12 GA)

MAXIMUM TOTAL UNIFORM LOAD				
MAXIMUM SPAN Inch	SOLID CHANNEL Lbs	PUNCHED HOLES Lbs	SHORT SLOTS CHANNEL Lbs	DEFLECTION Inch
18	1,270	1,140	1,080	0.03
24	1,170	1,050	990	0.05
36	780	700	660	0.12
48	580	530	500	0.21
60	470	420	400	0.33
72	390	350	330	0.47
96	280	250	240	0.80

"B1" SINGLE CHANNEL (1 5/8" X 1 5/8" X 12 GA)

MAXIMUM TOTAL UNIFORM LOAD				
MAXIMUM SPAN Inch	SOLID CHANNEL Lbs	PUNCHED HOLES Lbs	SHORT SLOTS CHANNEL Lbs	DEFLECTION Inch
18	1,870	1,680	1,590	0.03
24	1,400	1,260	1,190	0.05
36	940	840	790	0.10
48	700	630	600	0.18
60	560	510	480	0.29
72	470	420	400	0.42
84	400	380	340	0.57
96	350	320	300	0.74
108	300	270	250	0.90
120	240	220	210	0.99

"B2" BACK TO BACK CHANNEL [3] (1 5/8" X 1 5/8" X 12 GA)

MAXIMUM TOTAL UNIFORM LOAD				
MAXIMUM SPAN Inch	SOLID CHANNEL Lbs	PUNCHED HOLES Lbs	SHORT SLOTS CHANNEL Lbs	DEFLECTION Inch
18	2,610	2,350	2,220	0.01
24	2,610	2,350	2,220	0.02
36	2,610	2,350	2,220	0.06
48	1,990	1,790	1,690	0.10
60	1,590	1,430	1,350	0.16
72	1,320	1,190	1,130	0.23
84	1,130	1,020	960	0.32
96	990	890	840	0.42
108	880	790	750	0.53
120	790	710	670	0.65

REVIEWED FOR CODE COMPLIANCE
ICC
OPM-0403
BY: William Staehlin
DATE: 6-26-2024
CALIFORNIA BUILDING CODE

"C1" SINGLE CHANNEL (1 5/8" X 3 1/4" X 12 GA)

MAXIMUM TOTAL UNIFORM LOAD				
MAXIMUM SPAN Inch	SOLID CHANNEL Lbs	PUNCHED HOLES Lbs	SHORT SLOTS CHANNEL Lbs	DEFLECTION Inch
18	5,810	5,230	4,930	0.01
24	4,350	3,920	3,700	0.02
36	2,900	2,610	2,470	0.05
48	2,180	1,960	1,850	0.10
60	1,740	1,570	1,480	0.15
72	1,450	1,310	1,230	0.22
84	1,250	1,120	1,060	0.30
96	1,090	980	930	0.39
108	970	870	820	0.49
120	870	790	740	0.60

"C2" BACK TO BACK CHANNEL [3] (1 5/8" X 3 1/4" X 12 GA)

MAXIMUM TOTAL UNIFORM LOAD				
MAXIMUM SPAN Inch	SOLID CHANNEL Lbs	PUNCHED HOLES Lbs	SHORT SLOTS CHANNEL Lbs	DEFLECTION Inch
18	5,130	4,620	4,360	0.00
24	5,130	4,620	4,360	0.01
36	5,130	4,620	4,360	0.02
48	5,130	4,620	4,360	0.04
60	5,130	4,620	4,360	0.08
72	4,440	3,990	3,770	0.12
84	3,800	3,420	3,230	0.16
96	3,330	2,990	2,830	0.21
108	2,960	2,660	2,510	0.26
120	2,660	2,400	2,260	0.33

1. ALLOWANCE INCLUDED FOR CONCURRENT VERTICAL SEISMIC FORCE 0.14 S_{DS} W_P PER ASCE 7-10 SEC. 13.3.1.
2. STRUT SPAN IS THE DISTANCE BETWEEN THE VERTICAL HANGER RODS.
3. REFER TO "G" SERIES PAGES FOR VERTICAL SUPPORT CONNECTIONS.
4. FOR CONCENTRATED LOAD AT CENTER OF SPAN, DIVIDE UNIFORM LOAD BY 2 AND MULTIPLY DEFLECTION BY 0.8.

STRUT CHANNEL TRAPEZE MAXIMUM VERTICAL LOADS

REGISTERED PROFESSIONAL ENGINEER MARCIN WASAZNIK S-6612 STRUCTURAL STATE OF CALIFORNIA

ISAT
A Division of Tomarco Contractor Specialties

International Seismic Application Technology
14848 Northam Street, La Mirada, CA 90638
877-999-4728 (Toll Free) 714-523-0845 (fax)
www.isatsb.com

Rev. 7
02/23/18

Page
G2

STRUCTURAL ANGLE [4]
L3x3x1/4

MAXIMUM TOTAL UNIFORM LOAD		
MAXIMUM SPAN INCH	MAX. TOTAL UNIFORM LOAD [2, 3] LBS	DEFLECTION INCH
18	4,540	0.01
24	3,410	0.02
36	2,270	0.04
48	1,700	0.07
60	1,360	0.11
72	1,140	0.16
84	970	0.21
96	850	0.27
108	760	0.35
120	680	0.43

STRUCTURAL TUBE [4]
HSS 3x3x1/4

MAXIMUM TOTAL UNIFORM LOAD		
MAXIMUM SPAN INCH	MAX. TOTAL UNIFORM LOAD [3] LBS	DEFLECTION INCH
48	9,490	0.16
60	7,590	0.24
72	6,330	0.35
84	5,420	0.48
96	4,740	0.62
108	4,220	0.79
120	3,800	0.98

REVIEWED FOR CODE COMPLIANCE
HCAi
OPM-0403
BY: William Staehlin
DATE: 01-26-2024
CALIFORNIA BUILDING CODE, 2022

1. ALLOWANCE INCLUDED FOR CONCURRENT VERTICAL SEISMIC FORCE 0.14 S_{DS} WP PER ASCE 7-10 SEC. 13.3.1.
2. CONTINUOUS LATERAL TORSIONAL RESTRAINT IS PROVIDED BY THE ATTACHMENT OF THE UTILITY TO THE ANGLE.
3. FOR CONCENTRATED LOAD AT CENTER OF SPAN, DIVIDE UNIFORM LOAD BY 2 AND MULTIPLY DEFLECTION BY 0.8.
4. REFER TO "G" SERIES PAGES FOR VERTICAL SUPPORT CONNECTIONS.

STRUCTURAL STEEL TRAPEZE MAXIMUM VERTICAL LOADS

REGISTERED PROFESSIONAL ENGINEER
MARCIN WASAZNIK
S-6612
STRUCTURAL
STATE OF CALIFORNIA

ISAT
A Division of Tomarco Contractor Specialties

International Seismic Application Technology
14848 Northam Street, La Mirada, CA 90638
877-999-4728 (Toll Free) 714-523-0845 (fax)
www.isatsb.com

Rev. 7
02/23/18

Page
G2.1

GENERAL TRAPEZE BIAXIAL BENDING NOTES

1. ASCE 7-10, Section 13.6.5.5.3 requires that supports shall be specifically evaluated if weak-axis bending of light-gauge support steel is relied on for the seismic load path.

2. Biaxial bending of trapeze beams only occurs at locations with longitudinal braces. For locations without seismic bracing or with transverse seismic bracing the trapeze members may be chosen from Pages G2 and G2.1.

3. Strut span listed in the G3_Series Pages is the distance between the longitudinal braces. Strut span for the G2_Series Pages is the distance between the vertical hanger rods.

4. Tabulated load values are for the total gravity load on the trapeze beam. For a given lateral force factor, G, the longitudinal brace spacing is given in terms of multiples of the vertical hanger spacing.
   For example, with a 10' trapeze spacing, for the gravity loads and a 4X longitudinal brace spacing the trapeze member is designed for a tributary gravity load of 10' and a tributary lateral load of 40'.

5. Design for multiple struts not factory welded is based on the sum of the individual elements and not a combined section.

6. Design capacity for B1 struts (1 5/8" x 1 5/8" x 12 gage) used for top restraints for equipment and HVAC duct may be derived from Page G2 "B1 Single Channel". Divide the tabulated total uniform load from Page G2 by the project specific "G-Force".
   The gravity load of the utility is to be less than this value.

7. For those cases where the project specific trapeze loading exceeds the tabulated values, the designer or contractor may choose one of the following options:
   a. Add more trapeze members such as a Triple B1 with 12 Gage Connector (Page G3.3) or a Triple B1 with C6X8.2 (Page G3.4).
   b. Add a vertical support rod and longitudinal braces at the midspan of the trapeze beam. This reduces the span for gravity loads and longitudinal seismic loads.
   c. Reduce the longitudinal brace spacing.

REVIEWED FOR CODE COMPLIANCE
HCAi
OPM-0403
BY: William Staehlin
DATE: 01-26-2024
CALIFORNIA BUILDING CODE, 2022

BIAXIAL BENDING OF TRAPEZE BEAMS AT LONGITUDINAL BRACE LOCATIONS

B1 - TOTAL UNIFORM GRAVITY LOAD IN POUNDS WITH BIAXIAL BENDING

TABULATED LOADS ARE TOTAL VERTICAL LOADS.
LONGITUDINAL BRACE SPACING IS A MULTIPLIER OF THE VERTICAL HANGER SPACING.
STRUT SPAN IS DEFINED AS THE DISTANCE BETWEEN LONGITUDINAL BRACES.
SLOTTED STRUT IS USED FOR DESIGN.

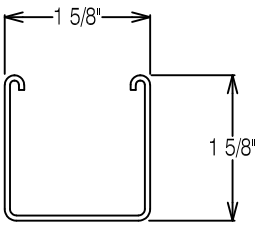

B1

G = 0.20				
STRUT SPAN Inch	LONGITUDINAL BRACE SPACING 8X Lbs	4X Lbs	3X Lbs	2X Lbs
18	600	800	850	950
24	450	600	650	700
36	300	400	420	450
48	200	300	320	350
60	180	230	250	275
72	150	200	210	230
84	130	160	175	200
96	110	140	150	170

G = 0.40				
STRUT SPAN Inch	LONGITUDINAL BRACE SPACING 8X Lbs	4X Lbs	3X Lbs	2X Lbs
18	400	600	680	800
24	300	450	500	580
36	200	300	340	400
48	150	230	250	300
60	120	180	200	230
72	100	150	170	200
84	85	130	140	170
96	75	110	120	150

G = 0.60				
STRUT SPAN Inch	LONGITUDINAL BRACE SPACING 8X Lbs	4X Lbs	3X Lbs	2X Lbs
18	300	475	550	650
24	225	360	420	500
36	150	240	280	340
48	110	180	210	250
60	90	140	170	200
72	75	120	140	160
84	65	100	120	140
96	50	90	100	120

G = 0.80				
STRUT SPAN Inch	LONGITUDINAL BRACE SPACING 8X Lbs	4X Lbs	3X Lbs	2X Lbs
18	250	400	480	600
24	180	300	360	450
36	120	200	240	300
48	90	150	180	220
60	75	120	140	180
72	60	100	120	150
84	50	80	100	130
96	40	70	80	110

G = 1.00				
STRUT SPAN Inch	LONGITUDINAL BRACE SPACING 8X Lbs	4X Lbs	3X Lbs	2X Lbs
18	200	350	420	540
24	150	250	300	400
36	90	170	200	260
48	75	130	150	200
60	60	100	125	160
72	50	80	100	130
84	40	70	80	110
96	35	60	70	100

REVIEWED FOR CODE COMPLIANCE
HCAI
OPM-0403
BY: William Staehlin
DATE: 01-26-2024
CALIFORNIA BUILDING CODE 2022

STRUT TOTAL UNIFORM GRAVITY LOAD WITH BIAXIAL BENDING

REGISTERED PROFESSIONAL ENGINEER
MARCIN WASAZNIK
S-6612
STRUCTURAL
STATE OF CALIFORNIA

ISAT
A Division of Tomarco Contractor Specialties

International Seismic Application Technology
14848 Northam Street, La Mirada, CA 90638
877-999-4728 (Toll Free) 714-523-0845 (fax)
www.isatsb.com

Rev. 7
03/03/17

Page
G3.1

B2 - TOTAL UNIFORM LOAD IN POUNDS

TABULATED LOADS ARE TOTAL VERTICAL LOADS.
LONGITUDINAL BRACE SPACING IS A MULTIPLIER OF THE VERTICAL HANGER SPACING.
STRUT SPAN IS DEFINED AS THE DISTANCE BETWEEN LONGITUDINAL BRACES.
SLOTTED STRUT IS USED FOR DESIGN.

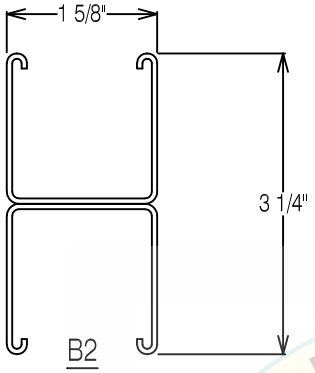

G = 0.20				
STRUT SPAN Inch	LONGITUDINAL BRACE SPACING 8X Lbs	4X Lbs	3X Lbs	2X Lbs
18	1400	2000	2200	2400
24	1000	1500	1600	1800
36	700	1000	1100	1200
48	500	750	800	900
60	400	600	650	700
72	350	500	550	600
84	300	400	450	500
96	250	350	400	400

G = 0.40				
STRUT SPAN Inch	LONGITUDINAL BRACE SPACING 8X Lbs	4X Lbs	3X Lbs	2X Lbs
18	900	1400	1600	2000
24	680	1000	1200	1500
36	450	700	800	1000
48	300	500	600	700
60	260	400	500	600
72	220	350	400	500
84	180	300	350	400
96	160	250	300	350

G = 0.60				
STRUT SPAN Inch	LONGITUDINAL BRACE SPACING 8X Lbs	4X Lbs	3X Lbs	2X Lbs
18	650	1100	1300	1600
24	500	800	1000	1200
36	330	550	650	800
48	250	400	500	600
60	200	320	400	500
72	170	260	320	400
84	140	220	280	350
96	120	200	240	300

G = 0.80				
STRUT SPAN Inch	LONGITUDINAL BRACE SPACING 8X Lbs	4X Lbs	3X Lbs	2X Lbs
18	520	900	1100	1400
24	400	680	800	1000
36	260	450	550	700
48	200	340	400	500
60	160	270	320	400
72	130	220	280	350
84	110	190	240	300
96	100	170	200	250

G = 1.00				
STRUT SPAN Inch	LONGITUDINAL BRACE SPACING 8X Lbs	4X Lbs	3X Lbs	2X Lbs
18	440	760	950	1200
24	320	550	700	900
36	220	350	460	600
48	160	280	350	450
60	120	220	280	350
72	100	180	230	300
84	90	160	200	250
96	80	140	170	200

REVIEWED FOR CODE COMPLIANCE
HCAI
OPM-0403
BY: William Staehlin
DATE: 01-26-2024
CALIFORNIA BUILDING CODE, 2022

B2 TOTAL UNIFORM LOAD

REGISTERED PROFESSIONAL ENGINEER
MARCIN WASAZNIK
S-6612
STRUCTURAL
STATE OF CALIFORNIA

ISAT
A Division of Tomarco Contractor Specialties

International Seismic Application Technology
14848 Northam Street, La Mirada, CA 90638
877-999-4728 (Toll Free) 714-523-0845 (fax)
www.isatsb.com

Rev. 7
03/03/17

Page
G3.2

TRIPLE CHANNEL 1 5/8" x 1 5/8" x 12 GA w/ CONNECTOR

TABULATED LOADS ARE TOTAL VERTICAL LOADS.
LONGITUDINAL BRACE SPACING IS A MULTIPLIER OF THE VERTICAL HANGER SPACING.
STRUT SPAN IS DEFINED AS THE DISTANCE BETWEEN LONGITUDINAL BRACES.
SLOTTED STRUT IS USED FOR DESIGN.

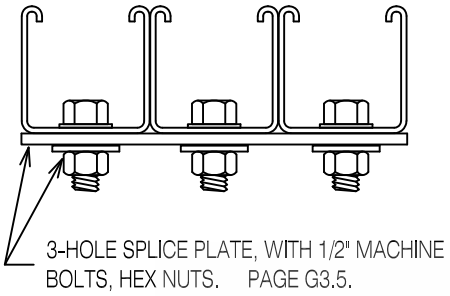

SPLICE PLATE CONNECTION

G = 0.20				
STRUT SPAN Inch	LONGITUDINAL BRACE SPACING 8X Lbs	4X Lbs	3X Lbs	2X Lbs
18	1800	2300	2500	2800
24	1300	1800	1900	2100
36	900	1200	1300	1400
48	650	900	950	1000
60	550	700	750	800
72	450	600	650	700
84	380	500	550	600
96	340	450	450	500

G = 0.40				
STRUT SPAN Inch	LONGITUDINAL BRACE SPACING 8X Lbs	4X Lbs	3X Lbs	2X Lbs
18	1200	1800	2000	2300
24	900	1300	1500	1800
36	600	900	1000	1200
48	450	660	750	900
60	350	540	600	700
72	300	450	500	600
84	250	380	440	500
96	220	340	380	450

G = 0.60				
STRUT SPAN Inch	LONGITUDINAL BRACE SPACING 8X Lbs	4X Lbs	3X Lbs	2X Lbs
18	900	1400	1600	2000
24	680	1100	1200	1500
36	450	700	850	1000
48	340	550	650	750
60	270	440	500	600
72	220	360	400	500
84	190	300	350	440
96	170	260	300	380

G = 0.80				
STRUT SPAN Inch	LONGITUDINAL BRACE SPACING 8X Lbs	4X Lbs	3X Lbs	2X Lbs
18	740	1200	1400	1800
24	550	900	1100	1300
36	360	600	700	900
48	270	450	550	650
60	220	350	400	550
72	180	300	350	450
84	150	260	300	380
96	130	230	250	340

G = 1.00				
STRUT SPAN Inch	LONGITUDINAL BRACE SPACING 8X Lbs	4X Lbs	3X Lbs	2X Lbs
18	600	1000	1250	1600
24	450	800	950	1200
36	300	500	650	800
48	220	400	460	600
60	180	300	380	480
72	150	250	320	400
84	130	220	260	340
96	110	190	240	300

REVIEWED FOR CODE COMPLIANCE
HCAI
OPM-0403
BY: William Staehlin
DATE: 01-26-2024
CALIFORNIA BUILDING CODE, 2022

TRIPLE CHANNEL LONGITUDINAL TRAPEZE STIFFENER

REGISTERED PROFESSIONAL ENGINEER
MARCIN WASAZNIK
S-6612
STRUCTURAL
STATE OF CALIFORNIA

ISAT
A Division of Tomarco Contractor Specialties

International Seismic Application Technology
14848 Northam Street, La Mirada, CA 90638
877-999-4728 (Toll Free) 714-523-0845 (fax)
www.isatsb.com

Rev. 7
03/03/17

Page
G3.3

TRIPLE CHANNEL 1 5/8" x 1 5/8" x 12 GA w/ C6x8.2

TABULATED LOADS ARE TOTAL VERTICAL LOADS IN POUNDS.
LONGITUDINAL BRACE SPACING IS A MULTIPLIER OF THE VERTICAL HANGER SPACING.
STRUT SPAN IS DEFINED AS THE DISTANCE BETWEEN LONGITUDINAL BRACES.
SLOTTED STRUT IS USED FOR DESIGN.

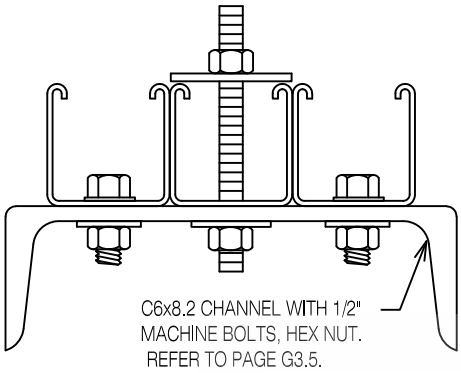

G = 0.20				
STRUT SPAN Inch	LONGITUDINAL BRACE SPACING			
	8X Lbs	4X Lbs	3X Lbs	2X Lbs
18	5500	6000	6200	6500
24	4000	4500	4600	4800
36	2700	3000	3100	3200
48	2000	2200	2300	2400
60	1600	1800	1850	1900
72	1300	1500	1550	1600
84	1100	1250	1300	1400
96	1000	1100	1150	1200
108	900	1000	1000	1000
120	800	900	900	900

G = 0.40				
STRUT SPAN Inch	LONGITUDINAL BRACE SPACING			
	8X Lbs	4X Lbs	3X Lbs	2X Lbs
18	4400	5400	5600	6000
24	3200	4000	4200	4500
36	2200	2500	2800	3000
48	1600	2000	2100	2200
60	1300	1600	1700	1800
72	1100	1300	1400	1500
84	900	1200	1200	1250
96	850	1000	1050	1100
108	750	900	950	1000
120	650	800	850	900

G = 0.60				
STRUT SPAN Inch	LONGITUDINAL BRACE SPACING			
	8X Lbs	4X Lbs	3X Lbs	2X Lbs
18	3800	4800	5200	5600
24	2800	3600	3800	4200
36	1800	2400	2600	2800
48	1400	1800	2000	2100
60	1100	1400	1600	1700
72	900	1200	1300	1400
84	800	1000	1100	1200
96	700	900	1000	1050
108	600	800	850	900
120	550	700	800	850

G = 0.80				
STRUT SPAN Inch	LONGITUDINAL BRACE SPACING			
	8X Lbs	4X Lbs	3X Lbs	2X Lbs
18	3200	4400	4800	5300
24	2400	3400	3600	4000
36	1600	2200	2400	2500
48	1250	1700	1800	2000
60	1000	1300	1400	1500
72	850	1100	1200	1250
84	700	900	1000	1100
96	600	800	900	1000
108	550	700	800	900
120	500	650	700	800

G = 1.00				
STRUT SPAN Inch	LONGITUDINAL BRACE SPACING			
	8X Lbs	4X Lbs	3X Lbs	2X Lbs
18	3000	4000	4600	5000
24	2200	3000	3400	3800
36	1500	2000	2200	2500
48	1100	1500	1700	1800
60	900	1250	1400	1500
72	750	1000	1100	1250
84	650	900	1000	1100
96	550	800	850	900
108	500	700	750	800
120	450	600	650	700

REVIEWED FOR CODE COMPLIANCE
OPM-0403
BY: William Staehlin
DATE: 01-26-2024
CALIFORNIA BUILDING CODE, 2022

TRIPLE CHANNEL LONGITUDINAL TRAPEZE STIFFENER

REGISTERED PROFESSIONAL ENGINEER
MARCIN WASAZNIK
S 6612
STRUCTURAL
STATE OF CALIFORNIA

ISAT
A Division of Tomarco Contractor Specialties

International Seismic Application Technology
14848 Northam Street, La Mirada, CA 90638
877-999-4728 (Toll Free) 714-523-0845 (fax)
www.isatsb.com

Rev. 7
03/03/17

Page
G3.4

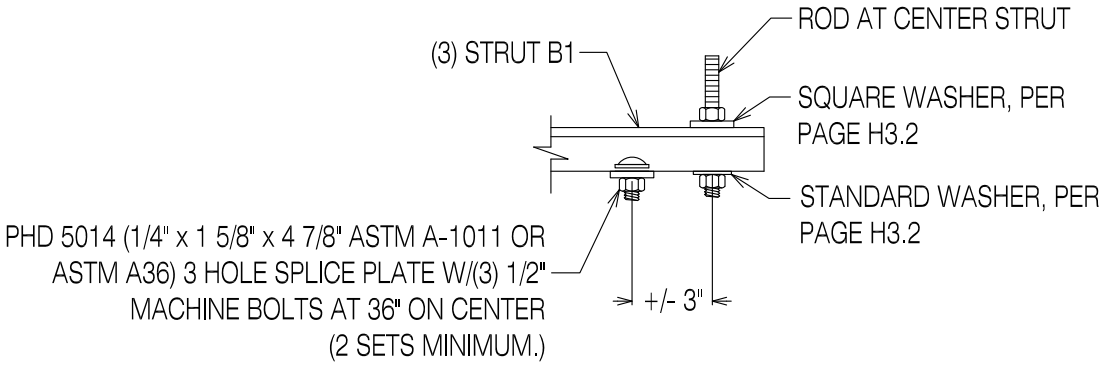

TRIPLE B1 WITH SPLICE PLATE CONNECTOR
FOR USE WITH PAGE G3.3

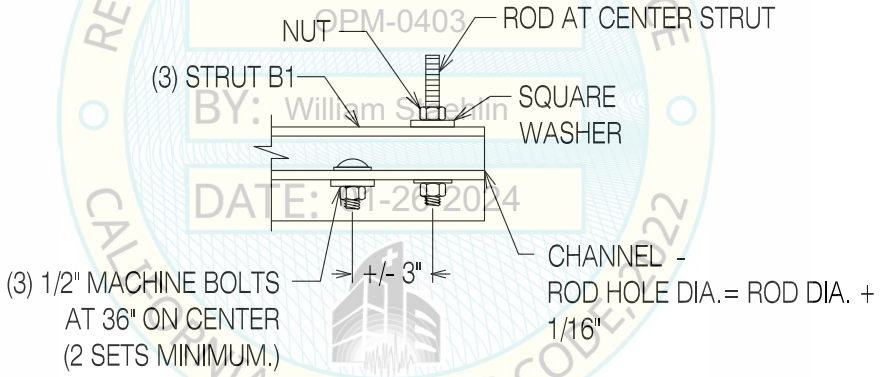

REVIEWED FOR CODE COMPLIANCE
HCAi
OPM-0403
BY: William Staehlin
DATE: 01-26-2024
CALIFORNIA BUILDING CODE 2022

TRIPLE B1 WITH CHANNEL REINFORCEMENT
FOR USE WITH PAGE G3.4

TRAPEZE LONGITUDINAL REINFORCEMENT OPTIONS

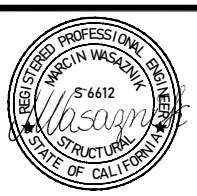

ISAT
A Division of Tomarco Contractor Specialties
International Seismic Application Technology
14848 Northam Street, La Mirada, CA 90638
877-999-4728 (Toll Free) 714-523-0845 (fax)
www.isatsb.com

Rev. 7
02/23/18

Page
G3.5

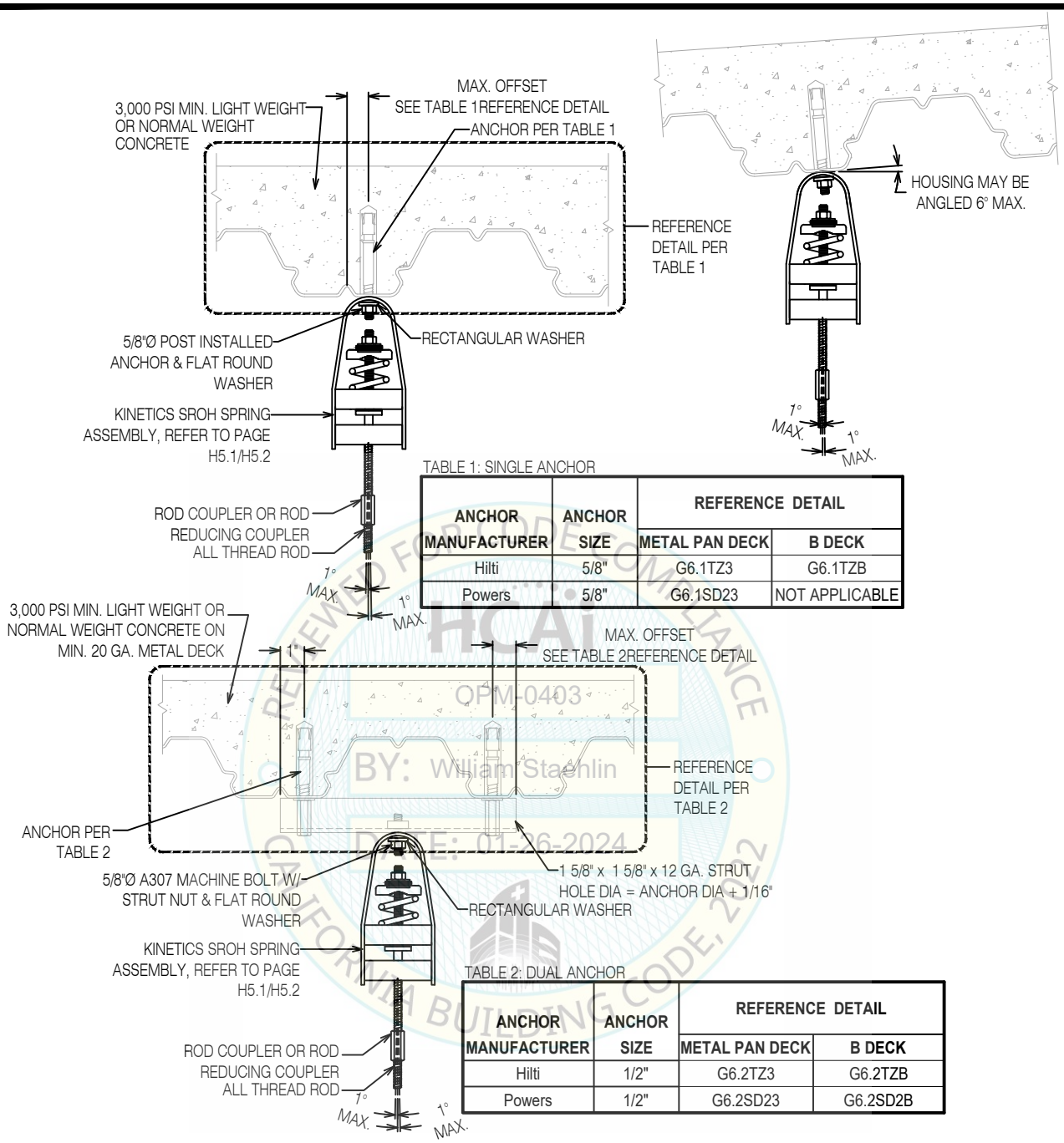

TABLE 1: SINGLE ANCHOR

ANCHOR MANUFACTURER	ANCHOR SIZE	REFERENCE DETAIL	
		METAL PAN DECK	B DECK
Hilti	5/8"	G6.1TZ3	G6.1TZB
Powers	5/8"	G6.1SD23	NOT APPLICABLE

TABLE 2: DUAL ANCHOR

ANCHOR MANUFACTURER	ANCHOR SIZE	REFERENCE DETAIL	
		METAL PAN DECK	B DECK
Hilti	1/2"	G6.2TZ3	G6.2TZB
Powers	1/2"	G6.2SD23	G6.2SD2B

HCAI REVIEWED FOR CODE COMPLIANCE OPM-0403 BY: William Staehlin DATE: 01-26-2024 CALIFORNIA BUILDING CODE, 2022

1. OVER STRENGTH FACTOR Ω = 2.0 PER ASCE 7-10, TABLE 13.6-1 IS INCLUDED FOR ANCHORAGE TO CONCRETE. WHEN DESIGNING ANCHOR AS SHOWN Ω MUST BE TAKEN INTO ACCOUNT IN DETERMINING THE FINAL DESIGN SPRING HANGER AND/OR ROD TENSION (TYPICAL FOR OVERTURNING ACTION OF SUSPENDED EQUIPMENT OR DUCT.)
2. INSTALL WEDGE ANCHORS WITH SPECIAL INSPECTION PER THE ICC ESR-1917 OR ESR-2502.
3. MAX. DESIGN RATING IS THE LESSER OF THE LOAD CAPACITY BASED ON REFERENCE DETAIL PER TABLE OR THE SEISMIC LOAD RATING OF HANGER BOX (PAGE H5.1/H5.2).
4. STRUCTURAL ENGINEER OF RECORD SHALL VERIFY ADEQUACY OF THE STRUCTURE FOR THE TABULATED DESIGN LOAD CAPACITIES.
5. WHEN INSTALLING ANCHORS IN REINFORCED CONCRETE, AVOID DAMAGING REINFORCING STEEL.
6. DESIGN IS CONTROLLED BY SEISMIC FORCES. NON-SEISMIC FORCES SUCH AS GRAVITY ARE OUTSIDE THE SCOPE OF THIS OPM.
7. SEE PAGE H5.1 & H5.2 FOR HANGER BOX DETAILS.

REGISTERED PROFESSIONAL ENGINEER MARCIN WASAZNIK S-6612 STRUCTURAL STATE OF CALIFORNIA

ISAT A Division of Tomarco Contractor Specialties

International Seismic Application Technology
14848 Northam Street, La Mirada, CA 90638
877-999-4728 (Toll Free) 714-523-0845 (fax)
www.isatsb.com

Rev. 11/27/18

Page
G4.1K

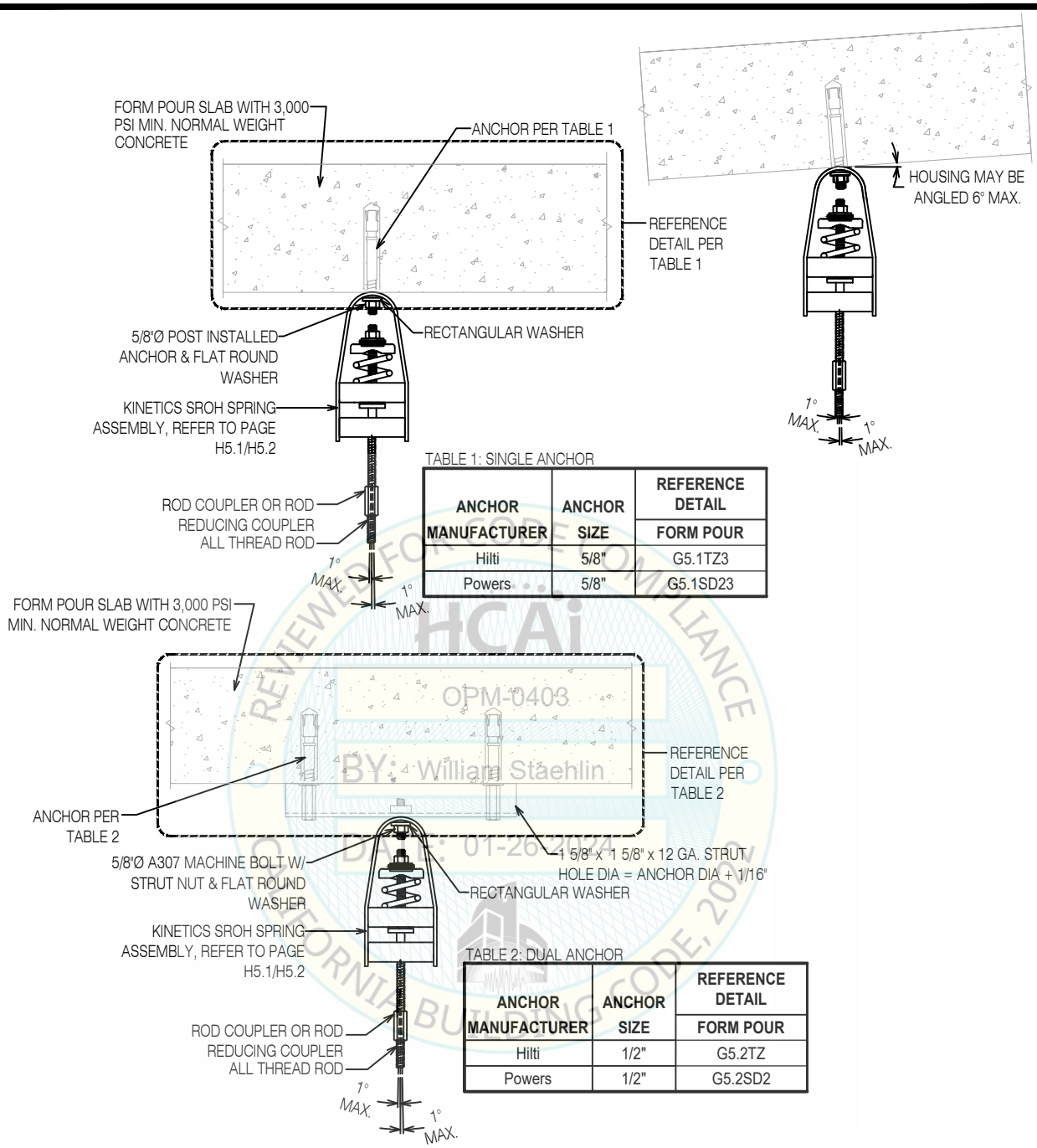

TABLE 1: SINGLE ANCHOR

ANCHOR MANUFACTURER	ANCHOR SIZE	REFERENCE DETAIL FORM POUR
Hilti	5/8"	G5.1TZ3
Powers	5/8"	G5.1SD23

TABLE 2: DUAL ANCHOR

ANCHOR MANUFACTURER	ANCHOR SIZE	REFERENCE DETAIL FORM POUR
Hilti	1/2"	G5.2TZ
Powers	1/2"	G5.2SD2

HCAi
REVIEWED FOR CODE COMPLIANCE
OPM-0403
BY: William Staehlin
DATE: 01-26-2024
CALIFORNIA BUILDING CODE, 2019

1. OVER STRENGTH FACTOR Ω = 2.0 PER ASCE 7-10, TABLE 13.6-1 IS INCLUDED FOR ANCHORAGE TO CONCRETE. WHEN DESIGNING ANCHOR AS SHOWN Ω MUST BE TAKEN INTO ACCOUNT IN DETERMINING THE FINAL DESIGN SPRING HANGER AND/OR ROD TENSION (TYPICAL FOR OVERTURNING ACTION OF SUSPENDED EQUIPMENT OR DUCT.)
2. INSTALL WEDGE ANCHORS WITH SPECIAL INSPECTION PER THE ICC ESR-1917 OR ESR-2502.
3. MAX. DESIGN RATING IS THE LESSER OF THE LOAD CAPACITY BASED ON REFERENCE DETAIL PER TABLE OR THE SEISMIC LOAD RATING OF HANGER BOX (PAGE H5.1/H5.2).
4. STRUCTURAL ENGINEER OF RECORD SHALL VERIFY ADEQUACY OF THE STRUCTURE FOR THE TABULATED DESIGN LOAD CAPACITIES.
5. WHEN INSTALLING ANCHORS IN REINFORCED CONCRETE, AVOID DAMAGING REINFORCING STEEL.
6. DESIGN IS CONTROLLED BY SEISMIC FORCES. NON-SEISMIC FORCES SUCH AS GRAVITY ARE OUTSIDE THE SCOPE OF THIS OPM.
7. SEE PAGE H5.1 & H5.2 FOR HANGER BOX DETAILS.

REGISTERED PROFESSIONAL ENGINEER MARCIN WASAZNIK S-6612 STRUCTURAL STATE OF CALIFORNIA

ISAT
A Division of Tomarco Contractor Specialties
International Seismic Application Technology
14848 Northam Street, La Mirada, CA 90638
877-999-4728 (Toll Free) 714-523-0845 (fax)
www.isatsb.com

Rev. 11/14/18

Page **G4.2K**

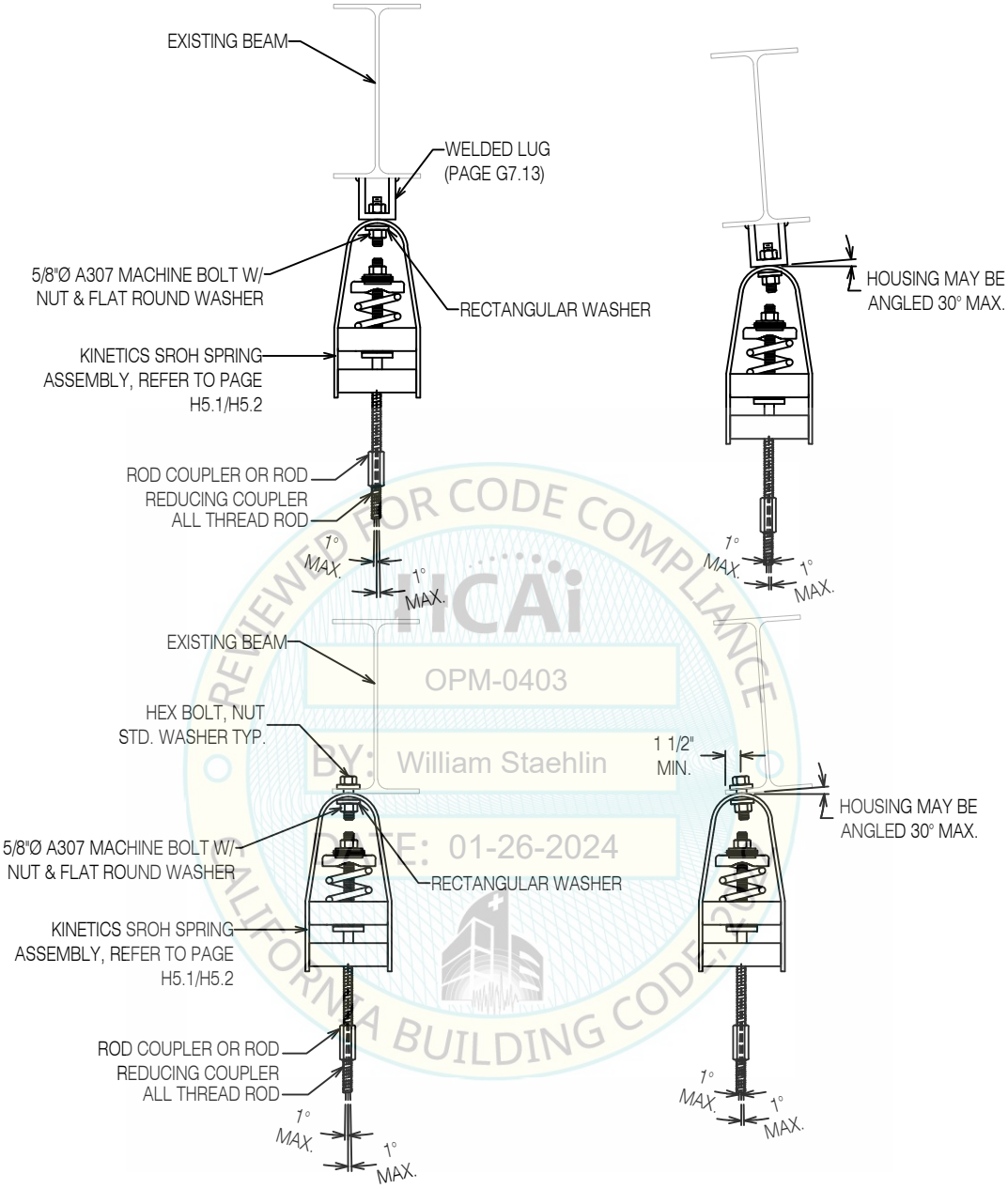

REVIEWED FOR CODE COMPLIANCE
HCAi
OPM-0403
BY: William Staehlin
DATE: 01-26-2024
CALIFORNIA BUILDING CODE

1. MAX. DESIGN RATING IS THE LESSER OF THE LOAD CAPACITY BASED ON REFERENCE DETAIL PER TABLE OR THE SEISMIC LOAD RATING OF HANGER BOX (PAGE H5.1/H5.2).
2. STRUCTURAL ENGINEER OF RECORD SHALL VERIFY ADEQUACY OF THE STRUCTURE FOR THE TABULATED DESIGN LOAD CAPACITIES.
3. DESIGN IS CONTROLLED BY SEISMIC FORCES. NON-SEISMIC FORCES SUCH AS GRAVITY ARE OUTSIDE THE SCOPE OF THIS OPM.
4. SEE PAGE H5.1 & H5.2 FOR HANGER BOX DETAILS.

REGISTERED PROFESSIONAL ENGINEER
MARCIN WASAZNIK
S-6612
STRUCTURAL
STATE OF CALIFORNIA

ISAT
A Division of Tomarco Contractor Specialties

International Seismic Application Technology
14848 Northam Street, La Mirada, CA 90638
877-999-4728 (Toll Free) 714-523-0845 (fax)
www.isatsb.com

Rev.
10/05/18

Page
G4.3K

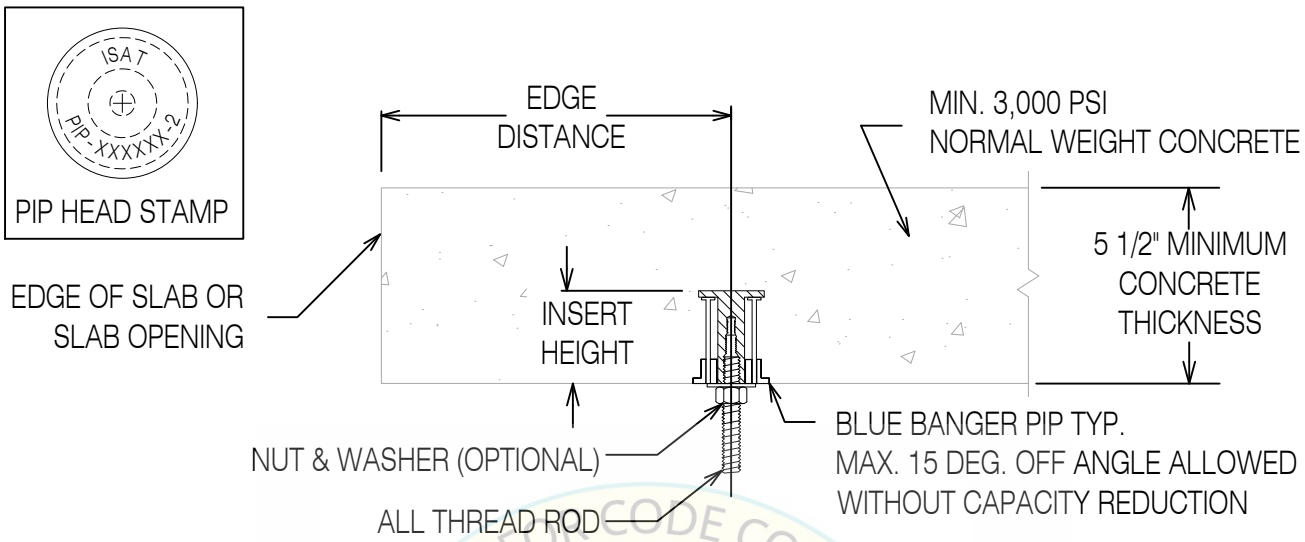

REVIEWED FOR CODE COMPLIANCE
HCAi
OPM-0403
by William Staehlin
DATE 1/26/2024
CALIFORNIA BUILDING CODE 2022

Blue Banger Hanger Poured-In-Place (PIP) Insert
Seismically Qualified for Anchorage In Cracked Concrete
Seismic Design Categories D, E and F
ICC Report No. ESR-3599 (November, 2017), Table 1

Deck Insert Part No. [4]	All Thread Rod Dia. See Page H1 or H1.1 For Design Values Inch	Maximum Tension Value At Minimum Concrete Strength				Nominal Insert Height Inch	Minimum Edge Distance Inch	Minimum Spacing Inch
		3,000 psi Lbs	4,000 psi Lbs	5,000 psi Lbs	6,000 psi Lbs			
PIP143812-2	1/4, 3/8, 1/2	1,380	1,594	1,782	1,952	2	6	6
PIP381258-2	3/8, 1/2, 5/8	1,468	1,695	1,895	2,076			
PIP5834-2	5/8, 3/4 7/8, 1 w/ Rod Coupler	1,380	1,594	1,782	1,952			

1. VALUES SHOWN ARE EXCLUSIVE OF THREADED ROD CAPACITY.
2. ROD LOCATIONS WITH SINGLE, RIGID BRACE CONNECTIONS REQUIRE ADDITIONAL SEISMIC LOAD CONSIDERATIONS BEFORE APPLYING THE ABOVE VALUES. REFER TO PROJECT SPECIFIC ISAT BRACING
3. LOAD VALUES SHOWN ARE ALLOWABLE STRESS DESIGN (ASD). CAPACITIES DERIVED IN CONFORMANCE WITH ASCE 7-10, PIN 62 & ACI 318-11, Appendix D.
4. SEE PAGES F10.1 THROUGH F10.3.

SINGLE BLUE BANGER HANGER PIP INSERT VERTICAL SUPPORT CONNECTION

REGISTERED PROFESSIONAL ENGINEER MARCIN WASAZNIK S-6612 STRUCTURAL STATE OF CALIFORNIA

ISAT
A Division of Tomarco Contractor Specialties
International Seismic Application Technology
14848 Northam Street, La Mirada, CA 90638
877-999-4728 (Toll Free) 714-523-0845 (fax)
www.isatsb.com

Rev. 7
06/18/18

Page
G5.1B

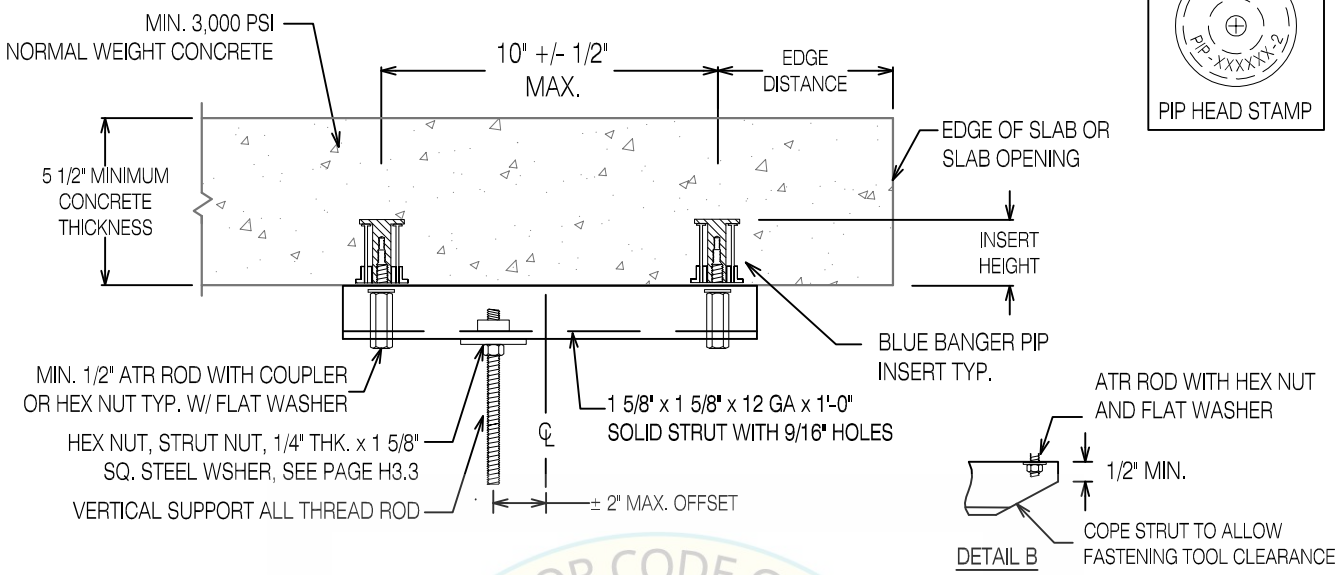

Blue Banger Hanger Poured-In-Place (PIP) Insert
Seismically Qualified for Anchorage In Cracked Concrete
Seismic Design Categories D, E and F
ICC Report No. ESR-3599 (November, 2017), Table 1

Deck Insert Part No. 7	Two Anchor Connection Tension Design Value Lbs. 1, 2, 3 Vertical Support Rod Max. Offset From C. L.			Nominal Insert Height	Minimum Edge Distance
	C.L. ± 0"	C.L. ± 1"	C.L. ± 2"	Inch	Inch
PIP143812-2	1,901	1,973	1,834	2	6
PIP381258-2					
PIP5834-2 [4]					

1. VALUES SHOWN ARE ALLOWABLE STRESS DESIGN (ASD) AND ARE EXCLUSIVE OF THREADED ROD CAPACITY.
2. CAPACITIES ARE THE SAME FOR ALL CONCRETE STRENGTHS > 3,000 PSI.
3. MAINTAIN 6" MINIMUM SPACING BETWEEN ADJACENT PAIRS OF INSERTS
4. USE DETAIL "B".
5. ROD LOCATIONS WITH SINGLE, RIGID BRACE CONNECTIONS REQUIRE ADDITIONAL SEISMIC LOAD CONSIDERATIONS BEFORE APPLYING THE ABOVE VALUES. REFER TO PROJECT SPECIFIC ISAT BRACING LEGEND. THIS LOAD INCREASE DOES NOT APPLY TO CABLE BRACES OR WHERE TWO RIGID BRACES CONNECTED TO A COMMON ROD ARE INSTALLED IN OPPOSING DIRECTIONS.
6. SEE PAGES F10.1 THROUGH F10.3.
7. LOAD VALUES SHOWN ARE ALLOWABLE STRESS DESIGN (ASD). CAPACITIES DERIVED IN CONFORMANCE WITH ASCE 7-10, PIN 62 & ACI 318-11, Appendix D.

REVIEWED FOR CODE COMPLIANCE
OPM-0403
BY: William Staehlin
DATE: 01-26-2024
CALIFORNIA BUILDING CODE 2022

DUAL BLUE BANGER HANGER PIP INSERT
VERTICAL SUPPORT CONNECTION

REGISTERED PROFESSIONAL ENGINEER
MARCIN WASAZNIK
S-6612
STRUCTURAL
STATE OF CALIFORNIA

ISAT
A Division of Tomarco Contractor Specialties

International Seismic Application Technology
14848 Northam Street, La Mirada, CA 90638
877-999-4728 (Toll Free) 714-523-0845 (fax)
www.isatsb.com

Rev. 8
02/13/19

Page
G5.2B

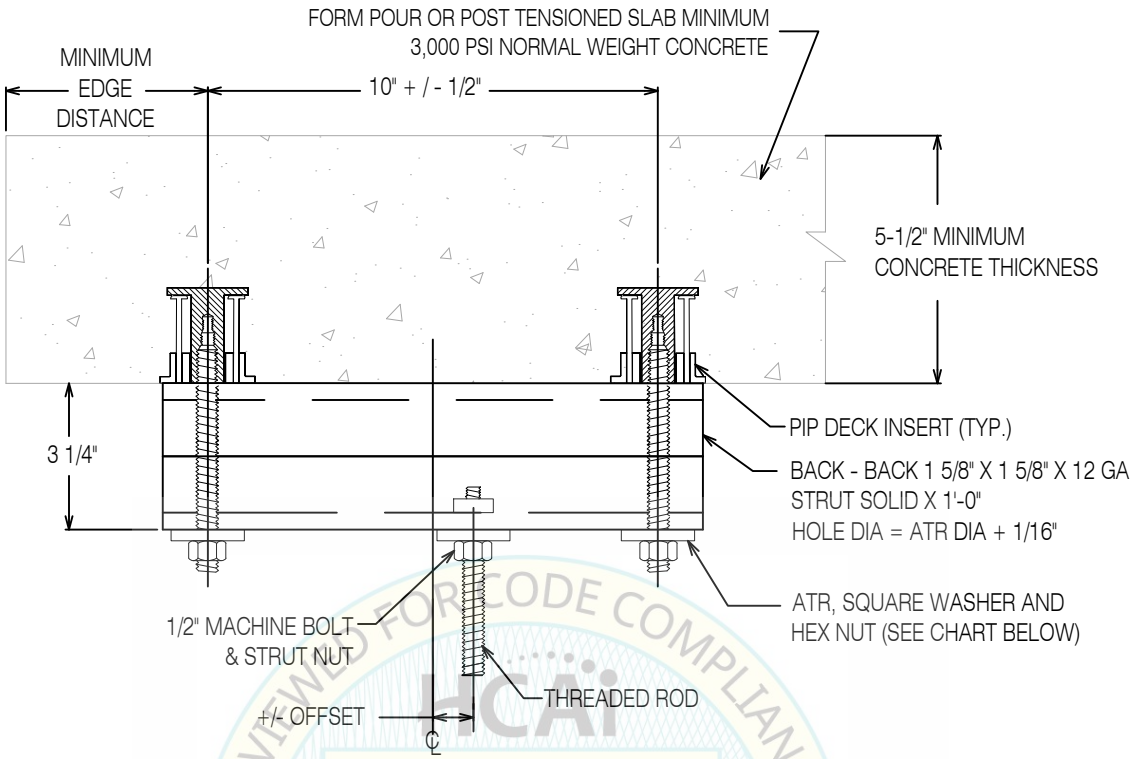

REVIEWED FOR CODE COMPLIANCE
HCAi
OPM-0403
BY: William Staehlin
CALIFORNIA BUILDING CODE 2022

Blue Banger Hanger Poured-In-Place (PIP) Insert
Seismically Qualified for Anchorage In Cracked Concrete
Seismic Design Categories D, E and F
ICC Report No. ESR-3599 (November, 2017), Table 1

				Vertical Support Rod Max. Offset From C.L.				
Deck Insert Part No. [7]	All Thread Rod Diameter (ATR) Inch	Minimum Edge Distance Inch	Minimum Distance Between Inserts Inch	C.L.+/-0" Tension Design Value Lbs	C.L.+/-1" Tension Design Value Lbs [5]	C.L.+/-2" Tension Design Value Lbs [5]	C.L.+/-3" Tension Design Value Lbs [5]	C.L.+/- 4" Tension Design Value Lbs [5]
PIP 143812	1/2	6	9	2,607	2,153	1,834	1,598	1,415
PIP 381258	1/2	6	9	2,720	2,247	1,914	1,667	1,477

1. VALUES SHOWN ARE ALLOWABLE STRESS DESIGN (ASD) AND ARE EXCLUSIVE OF THREADED ROD CAPACITY.
2. CAPACITIES ARE THE SAME FOR ALL CONCRETE STRENGTHS > 3,000 PSI.
3. MAY BE LIMITED BY ROD STRENGTH, PAGE H1 OR STRUT NUT PULL-OUT STRENGTH, PAGE H3.2.
4. MAINTAIN 6" MINIMUM SPACING BETWEEN ADJACENT PAIRS OF INSERTS
5. SEE PAGES F10.1 THROUGH F10.3.
6. ROD LOCATIONS WITH SINGLE, RIGID BRACE CONNECTIONS REQUIRE ADDITIONAL SEISMIC LOAD CONSIDERATIONS BEFORE APPLYING THE ABOVE VALUES. REFER TO PROJECT SPECIFIC ISAT BRACING
7. LOAD VALUES SHOWN ARE ALLOWABLE STRESS DESIGN (ASD). CAPACITIES DERIVED IN CONFORMANCE WITH ASCE 7-10, PIN 62 & ACI 318-11, Appendix D.

DUAL BLUE BANGER HANGER PIP INSERT
VERTICAL SUPPORT CONNECTION

REGISTERED PROFESSIONAL ENGINEER
MARCIN WASAZNIK
S 6612
STRUCTURAL
STATE OF CALIFORNIA

ISAT
A Division of Tomarco Contractor Specialties
International Seismic Application Technology
14848 Northam Street, La Mirada, CA 90638
877-999-4728 (Toll Free) 714-523-0845 (fax)
www.isatsb.com

Rev. 8
10/05/18

Page
G5.3B

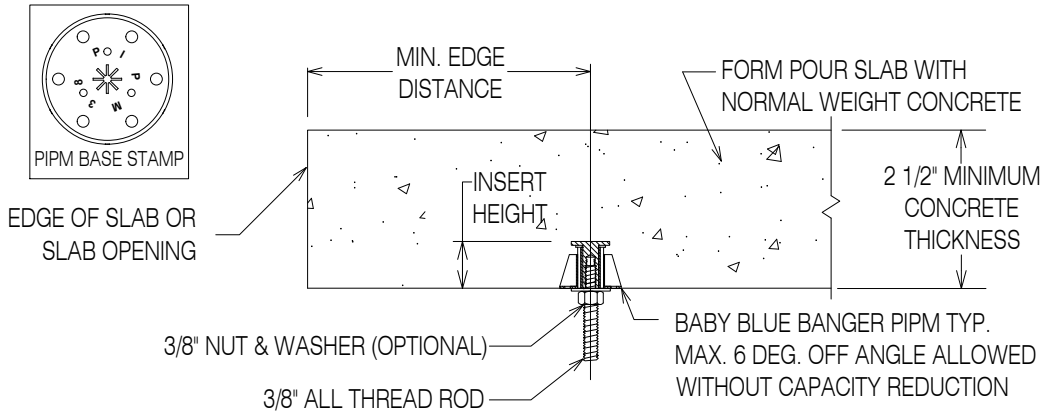

ISAT Baby Blue Banger Hanger Poured-In-Place (PIP) Insert
Seismically Qualified for Anchorage In Cracked Concrete
Seismic Design Categories D, E and F
ICC Report No. ESR-3599 (November 2022), Table 2

Deck Insert Part No. [4]	All Thread Rod Dia. See Page H1 or H1.1 For Design Values	Maximum Tension Value At Minimum Concrete Strength[5]				Nominal Insert Height	Minimum Edge Distance	Minimum Spacing
		3,000 psi	4,000 psi	5,000 psi	6,000 psi			
	Inch	Lbs	Lbs	Lbs	Lbs	Inch	Inch	Inch
PIPM38	3/8	769	888	993	1,088	1.4	3	3.75

1. VALUES SHOWN ARE EXCLUSIVE OF THREAD ROD CAPACITY.
2. ROD LOCATION WITH SINGLE, RIGID BRACE CONNECTION REQUIRE ADDITIONAL SEISMIC LOAD CONSIDERATIONS BEFORE APPLYING THE ABOVE VALUES. REFER TO PROJECT SPECIFIC ISAT BRACING LEGEND, AND C-SERIES PAGES. THIS LOAD INCREASE DOES NOT APPLY TO CABLE BRACES OR WHERE TWO RIGID BRACES CONNECTED TO A COMMON ROD ARE INSTALLED IN OPPOSING DIRECTIONS.
3. LOAD VALUES SHOWN ARE ALLOWABLE STRESS DESIGN (ASD). CAPACITIES DERIVED IN CONFORMANCE WITH ASCE 7-16, ACI 318.
4. DESIGN IS CONTROLLED BY SEISMIC FORCES. NON-SEISMIC FORCES SUCH AS GRAVITY ARE OUTSIDE THE SCOPE OF THIS OPM.
5. THE CONCRETE SHALL HAVE ACHIEVED ITS MINIMUM DESIGN STRENGTH PRIOR TO LOADING THE SPECIALTY INSERTS.

REVIEWED FOR CODE COMPLIANCE
OPM-0403
BY: William Staehlin
DATE: 01-26-2024
CALIFORNIA BUILDING CODE 2022

SINGLE BABY BLUE BANGER HANGER PIPM38 INSERT VERTICAL SUPPORT CONNECTION

REGISTERED PROFESSIONAL ENGINEER MARCIN WASAZNIK S 6612 STRUCTURAL STATE OF CALIFORNIA

ISAT
A Division of Tomarco Contractor Specialties
International Seismic Application Technology
14848 Northam Street, La Mirada, CA 90638
877-999-4728 (Toll Free) 714-523-0845 (fax)
www.isatsb.com

Rev. 3
11/21/23
Page
G5.1BB

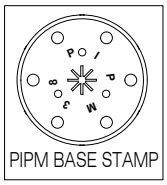

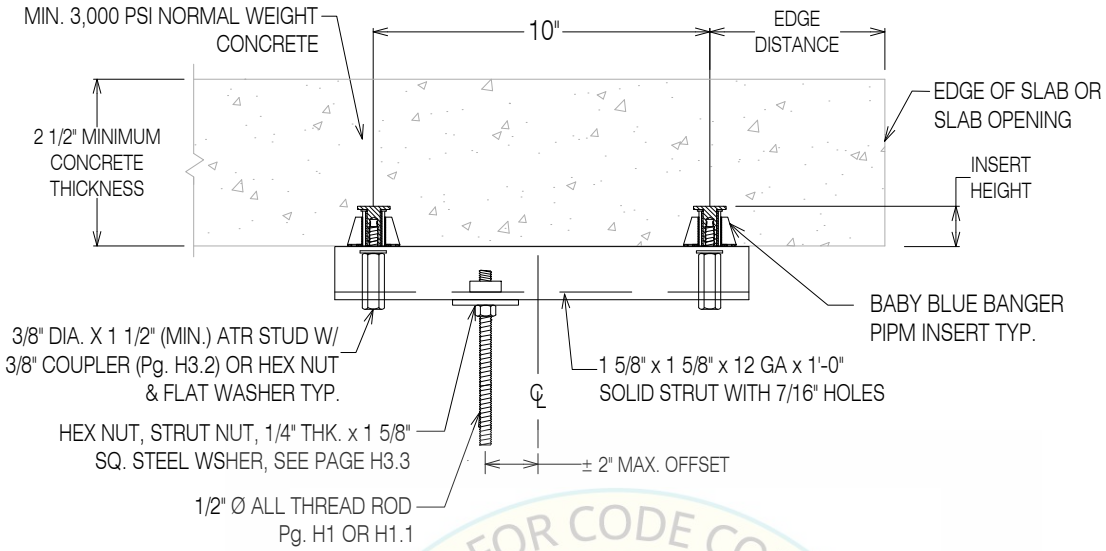

REVIEWED FOR CODE COMPLIANCE
BY: William Staehlin
DATE: 01-26-2024
2022 CALIFORNIA BUILDING CODE

ISAT Baby Blue Hanger Poured-In-Place (PIP) Insert
Seismically Qualified For Anchorage In Cracked Concrete
Seismic Design Categories D, E, and F
ICC Report No. ESR-3599 (November 2022), Table 2

Deck Insert Part No. [5]	Two Anchor Connection Tension Design Value Lbs. [1,2,3,7] Vertical Support Rod Max. Offset From C.L.			Nominal Insert Height	Minimum Edge Distance
	CL ± 0"	CL ± 1"	CL ± 2"	Inch	Inch
PIPM38	1,375	1,136	968	1.4	3

1. VALUES SHOWN ARE EXCLUSIVE OF THREADED ROD CAPACITY.
2. CAPACITIES ARE THE SAME FOR ALL CONCRETE STRENGTHS ≥ 3,000 PSI.
3. MAINTAIN 3" MINIMUM SPACING BETWEEN ADJACENT PAIRS OF INSERT.
4. ROD LOCATION WITH SINGLE, RIGID BRACE CONNECTIONS REQUIRE ADDITIONAL SEISMIC LOAD CONSIDERATIONS BEFORE APPLYING THE ABOVE VALUES. REFER TO THE PROJECT SPECIFIC ISAT BRACING LEGEND, OR C-SERIES PAGES. THIS LOAD INCREASE DOES NOT APPLY TO CABLE BRACES OR WHERE TWO RIGID BRACES CONNECTED TO A COMMON ROD ARE INSTALLED IN OPPOSING DIRECTIONS.
5. LOAD VALUES SHOWN ARE ALLOWABLE STRESS DESIGN (ASD). CAPACITIES DERIVED IN CONFORMANCE WITH ASCE 7-16 AND ACI 318.
6. DESIGN IS CONTROLLED BY SEISMIC FORCES. NON SEISMIC FORCES SUCH AS GRAVITY ARE OUTSIDE THE SCOPE OF THIS OPM.
7. THE CONCRETE SHALL HAVE ACHIEVED ITS MINIMUM DESIGN STRENGTH PRIOR TO LOADING OF THE SPECIALTY INSERTS.

DUAL BABY BLUE BANGER HANGER PIPM38 INSERT
VERTICAL SUPPORT CONNECTION TO FORM POUR SLAB

ISAT
A Division of Tomarco Contractor Specialties
International Seismic Application Technology
14848 Northam Street, La Mirada, CA 90638
877-999-4728 (Toll Free) 714-523-0845 (fax)
www.isatsb.com

Rev. 3
11/21/23
Page
G5.2BB

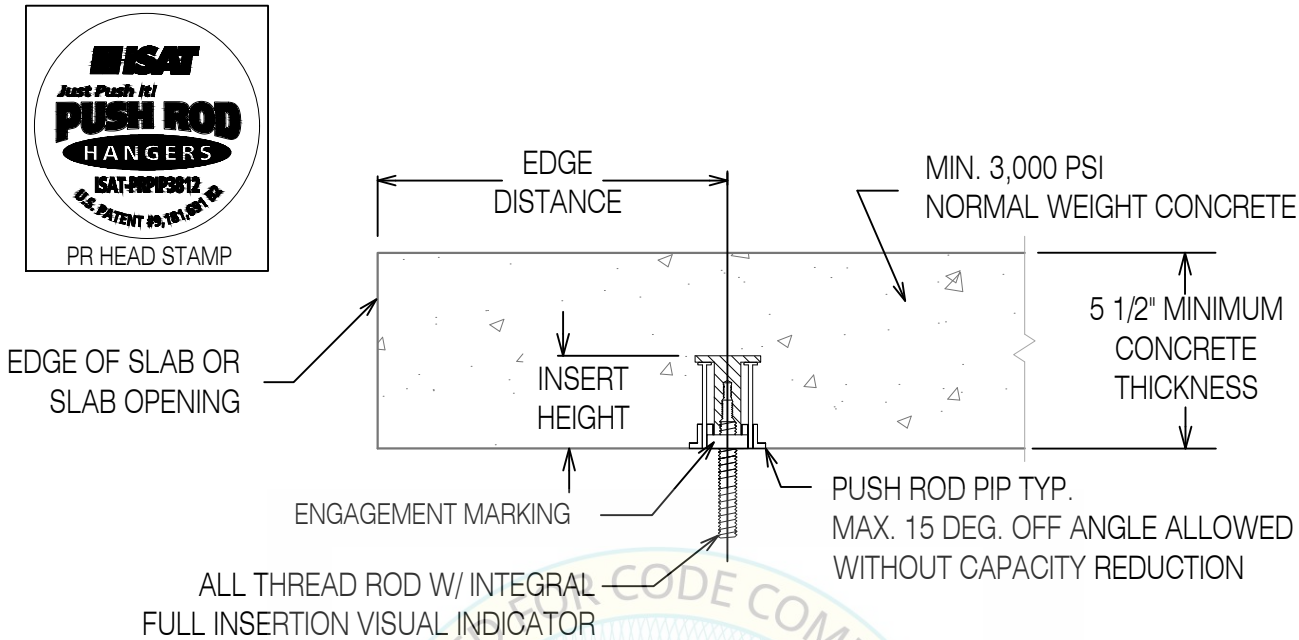

REVIEWED FOR CODE COMPLIANCE
HCAi
OPM-0403
DATE: 01-26-2024
CALIFORNIA BUILDING CODE, 2022

Push Rod Poured-In-Place (PRPIP) Insert
Seismically Qualified for Anchorage In Cracked Concrete
Seismic Design Categories D, E and F
ICC Report No. ESR-3599 (November 2017), Table 2A

Deck Insert Part No. [5]	All Thread Rod Dia. (ATR) [1] Inch	Maximum Tension Value At Minimum Concrete Strength [4]				Nominal Insert Height Inch	Minimum Edge Distance Inch	Minimum Spacing Inch
		3,000 psi Lbs	4,000 psi Lbs	5,000 psi Lbs	6,000 psi Lbs			
PRPIP3812	3/8	1,468	1,695	1,895	1,979	2	6	6
PRPIP3812	1/2							

1. ISAT SUPPLIED ALL THREAD ROD REQUIRED WITH INTEGRAL "FULL INSERTION VISUAL INDICATOR".
2. ROD LOCATIONS WITH SINGLE, RIGID BRACE CONNECTIONS REQUIRE ADDITIONAL SEISMIC LOAD CONSIDERATIONS BEFORE APPLYING THE ABOVE VALUES. REFER TO PROJECT SPECIFIC ISAT BRACING LEGEND. THIS LOAD INCREASE DOES NOT APPLY TO CABLE BRACES OR WHERE TWO RIGID BRACES CONNECTED TO A COMMON ROD ARE INSTALLED IN OPPOSING DIRECTIONS.
3. LOAD VALUES SHOWN ARE ALLOWABLE STRESS DESIGN (ASD). CAPACITIES DERIVED IN CONFORMANCE WITH ASCE 7-10, PIN 62 & ACI 318-11, Appendix D.
4. ALL THREAD ROD CAPACITY INDEPENDENT OF INSERT VALUE. DESIGNER SHALL CHECK ATR CAPACITIES.
5. SEE PAGE F10.0

SINGLE BLUE BANGER HANGER PIP INSERT VERTICAL SUPPORT CONNECTION

REGISTERED PROFESSIONAL ENGINEER MARCIN WASAZNIK S-6612 STRUCTURAL STATE OF CALIFORNIA

ISAT
A Division of Tomarco Contractor Specialties
International Seismic Application Technology
14848 Northam Street, La Mirada, CA 90638
877-999-4728 (Toll Free) 714-523-0845 (fax)
www.isatsb.com

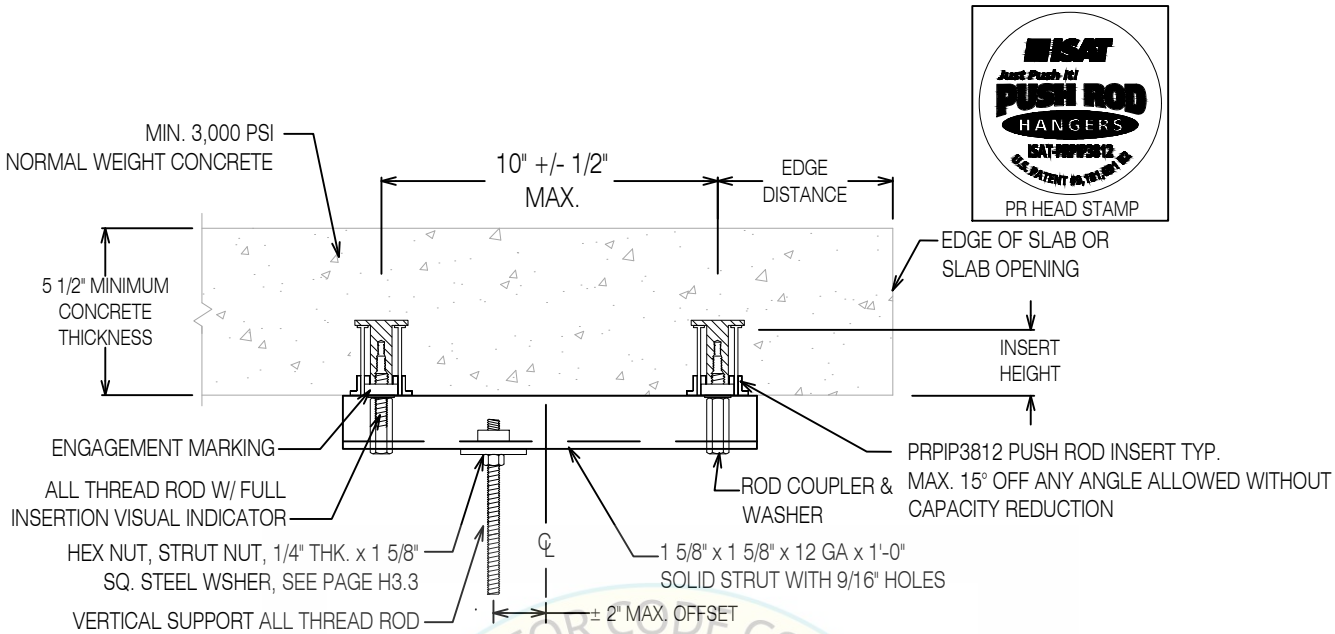

Push Rod Poured-In-Place (PRPIP) Insert
Seismically Qualified for Anchorage In Cracked Concrete
Seismic Design Categories D, E and F
ICC Report No. ESR-3599 (November 2017), Table 2A

Deck Insert Part No. [6]	All Thread Rod Dia (ATR) Inch [5]	Two Anchor Connection Tension Design Value Lbs. [1, 2, 3] Vertical Support Rod Max. Offset From C. L.			Nominal Insert Height Inch	Minimum Edge Distance Inch
		C.L. ± 0"	C.L. ± 1"	C.L. ± 2"		
PRPIP3812	3/8	1,901	1,973	1,914	2	6
PRPIP3812	1/2					

1. LOAD VALUES SHOWN ARE ALLOWABLE STRESS DESIGN (ASD). CAPACITIES DERIVED IN CONFORMANCE WITH ASCE 7-10, PIN 62 & ACI 318-11, Appendix D.
2. CAPACITIES ARE THE SAME FOR ALL CONCRETE STRENGTHS $\geq$ 3,000 PSI.
3. MAINTAIN 6" MINIMUM SPACING BETWEEN ADJACENT PAIRS OF INSERTS
4. ROD LOCATIONS WITH SINGLE, RIGID BRACE CONNECTIONS REQUIRE ADDITIONAL SEISMIC LOAD CONSIDERATIONS BEFORE APPLYING THE ABOVE VALUES. REFER TO PROJECT SPECIFIC ISAT BRACING LEGEND. THIS LOAD INCREASE DOES NOT APPLY TO CABLE BRACES OR WHERE TWO RIGID BRACES CONNECTED TO A COMMON ROD ARE INSTALLED IN OPPOSING DIRECTIONS.
5. ISAT SUPPLIED ALL THREAD ROD REQUIRED WITH INTEGRAL "FULL INSERTION VISUAL INDICATOR".
6. SEE PAGE F10.0

DUAL PUSH ROD (PRPIP) INSERT VERTICAL SUPPORT CONNECTION

REGISTERED PROFESSIONAL ENGINEER MARCIN WASAZNIK S-6612 STRUCTURAL STATE OF CALIFORNIA

ISAT
A Division of Tomarco Contractor Specialties

International Seismic Application Technology
14848 Northam Street, La Mirada, CA 90638
877-999-4728 (Toll Free) 714-523-0845 (fax)
www.isatsb.com

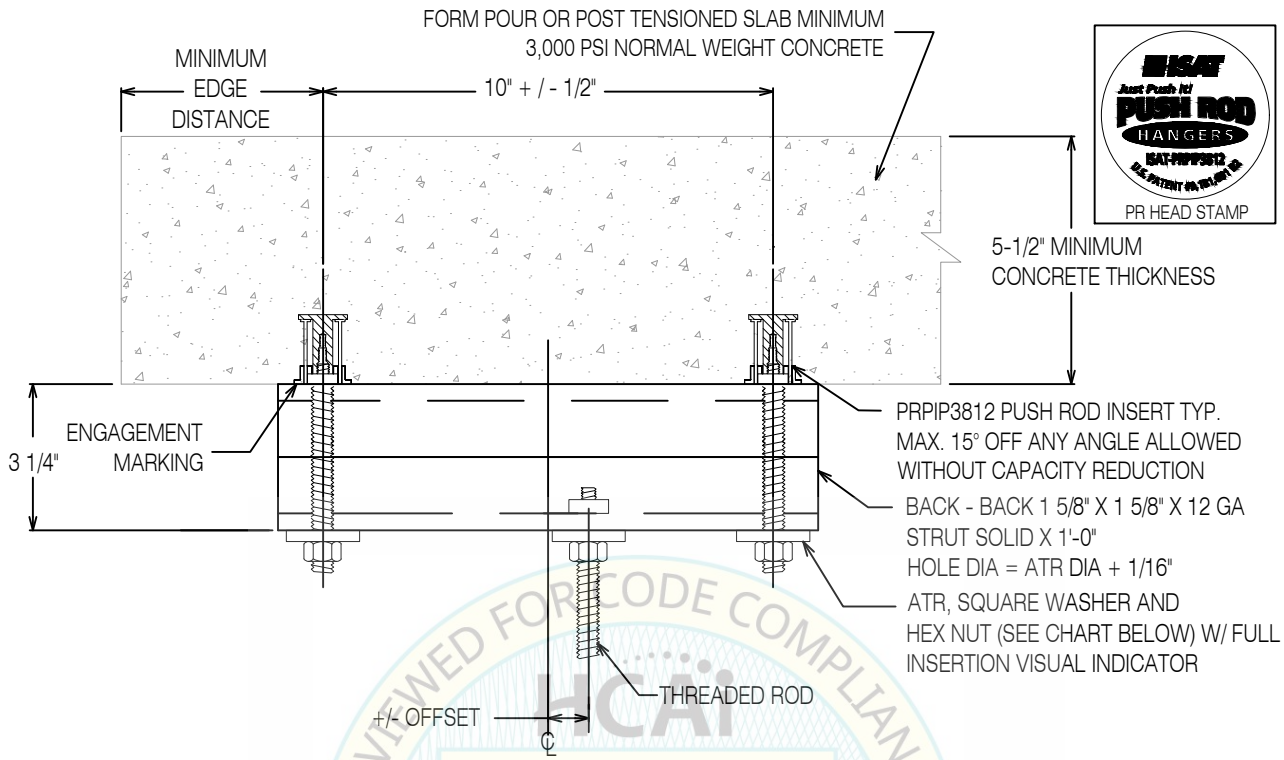

REVIEWED FOR CODE COMPLIANCE
HCAi
OPM-0403
BY: William Staehlin
DATE: 01-26-2024
CALIFORNIA BUILDING CODE, 2022

Push Rod Poured-In-Place (PRPIP) Insert
Seismically Qualified for Anchorage In Cracked Concrete
Seismic Design Categories D, E and F
ICC Report No. ESR-3599 (November 2017), Table 2A

Deck Insert Part No. [7]	All Thread Rod Dia (ATR) Inch [6]	Minimum Edge Distance Inch	Minimum Distance Between Inserts Inch	Vertical Support Rod Max. Offset From C.L.				
				C.L.+/-0" Tension Design Value Lbs	C.L.+/-1" Tension Design Value Lbs	C.L.+/-2" Tension Design Value Lbs	C.L.+/-3" Tension Design Value Lbs	C.L.+/- 4" Tension Design Value Lbs
PRPIP3812	3/8	6	9	2,720	2,247	1,914	1,667	1,477
PRPIP3812	1/2	6	9					

1. LOAD VALUES SHOWN ARE ALLOWABLE STRESS DESIGN (ASD). CAPACITIES DERIVED IN CONFORMANCE WITH ASCE 7-10, PIN 62 & ACI 318-11, Appendix D.
2. CAPACITIES ARE THE SAME FOR ALL CONCRETE STRENGTHS $\geq$ 3,000 PSI.
3. MAY BE LIMITED BY ROD STRENGTH, PAGE H1 OR STRUT NUT PULL-OUT STRENGTH, PAGE H3.3.
4. MAINTAIN 6" MINIMUM SPACING BETWEEN ADJACENT PAIRS OF INSERTS
5. ROD LOCATIONS WITH SINGLE, RIGID BRACE CONNECTIONS REQUIRE ADDITIONAL SEISMIC LOAD CONSIDERATIONS BEFORE APPLYING THE ABOVE VALUES. REFER TO PROJECT SPECIFIC ISAT BRACING LEGEND. THIS LOAD INCREASE DOES NOT APPLY TO CABLE BRACES OR WHERE TWO RIGID BRACES CONNECTED TO A COMMON ROD ARE INSTALLED IN OPPOSING DIRECTIONS.
6. ISAT SUPPLIED ALL THREAD ROD REQUIRED WITH INTEGRAL "FULL INSERTION VISUAL INDICATOR".
7. SEE PAGE F10.0

DUAL PUSH ROD (PRPIP) INSERT
VERTICAL SUPPORT CONNECTION

REGISTERED PROFESSIONAL ENGINEER
MARCIN WASAZNIK
S-6612
STRUCTURAL
STATE OF CALIFORNIA

ISAT
A Division of Tomarco Contractor Specialties
International Seismic Application Technology
14848 Northam Street, La Mirada, CA 90638
877-999-4728 (Toll Free) 714-523-0845 (fax)
www.isatsb.com

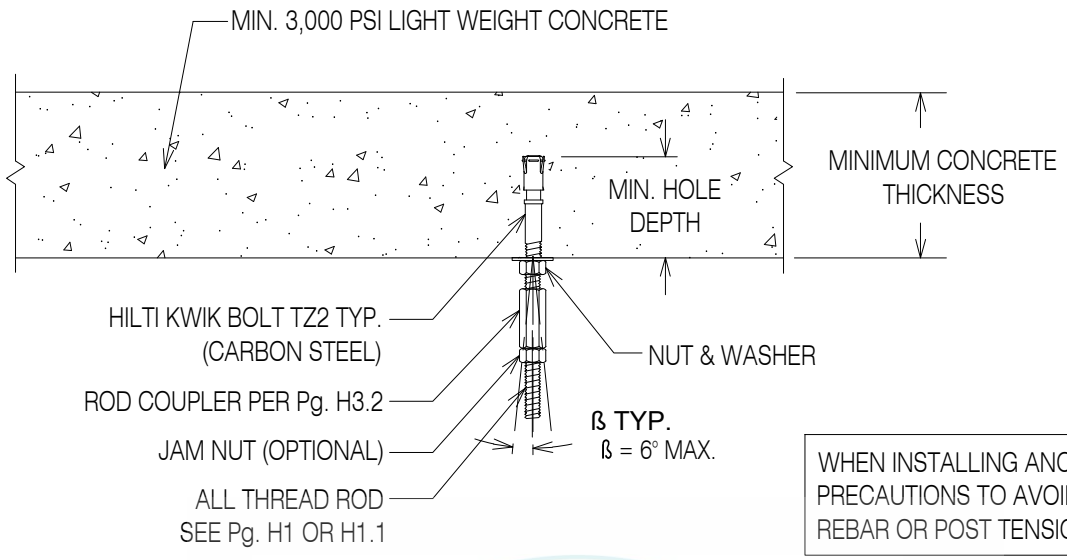

WHEN INSTALLING ANCHORS TAKE PRECAUTIONS TO AVOID CUTTING REBAR OR POST TENSIONED TENDONS.

Hilti Kwik Bolt TZ2 (Carbon Steel) Concrete Expansion Anchor, Minimum 3000 psi LWC
Seismically Qualified For Anchorage In Cracked Concrete
Seismic Design Categories D, E and F
ICC Report No. ESR-4266 (Dated May 2023), Table 4

Anchor Diameter Inch	Tension Value 3 ksi Conc Lbs.	Minimum Hole Depth Inch	Minimum Effective Embed. Inch	Minimum Concrete Thickness Inch	Installation Torque Ft-Lbs.	Minimum Edge Distance Inch	Minimum Anchor Spacing Inch
3/8	1,235	2 3/4	2	4	30	4 1/2	6
1/2	1,235	2 3/4	2	4	50	4 1/2	6
1/2	2,071	4 1/4	3 1/4	5 1/2	50	6 1/2	9 3/4
5/8	1,992	3 3/4	2 3/4	5	40	6 1/2	8 1/4
5/8	2,828	4 3/4	4	6	40	8 3/4	12
3/4	3,171	4 3/4	3 3/4	6	110	12	11 1/4

1. MINIMUM EFFECTIVE EMBEDMENT IS AFTER THE ANCHOR HAS BEEN SET.
2. ROD LOCATION WITH SINGLE, RIGID BRACE CONNECTIONS REQUIRE ADDITIONAL SEISMIC LOAD CONSIDERATIONS BEFORE APPLYING THE ABOVE VALUES. REFER TO THE PROJECT SPECIFIC ISAT BRACING LEGEND, OR C-SERIES PAGES. THIS LOAD INCREASE DOES NOT APPLY TO CABLE BRACES OR WHERE TWO RIGID BRACES CONNECTED TO A COMMON ROD ARE INSTALLED IN OPPOSING DIRECTIONS.
3. LOAD VALUES SHOWN ARE ALLOWABLE STRESS DESIGN (ASD). CAPACITIES DERIVED IN CONFORMANCE WITH ASCE 7-16 AND ACI 318.
4. DESIGN IS CONTROLLED BY SEISMIC FORCES. NON SEISMIC FORCES SUCH AS GRAVITY ARE OUTSIDE THE SCOPE OF THIS OPM.

REVIEWED FOR CODE COMPLIANCE
HCAI
OPM-0403
BY: William Staehlin
DATE: 01-26-2024
CALIFORNIA BUILDING CODE, 2022

SINGLE HILTI KWIK BOLT TZ2 ANCHOR
VERTICAL SUPPORT CONNECTION TO FORM POUR SLAB

REGISTERED PROFESSIONAL ENGINEER
MARCIN WASAZNIK
S 6612
STRUCTURAL
STATE OF CALIFORNIA

ISAT
A Division of Tomarco Contractor Specialties

International Seismic Application Technology
14848 Northam Street, La Mirada, CA 90638
877-999-4728 (Toll Free) 714-523-0845 (fax)
www.isatsb.com

Rev. 2
11/21/23

Page
G5.1TZ23

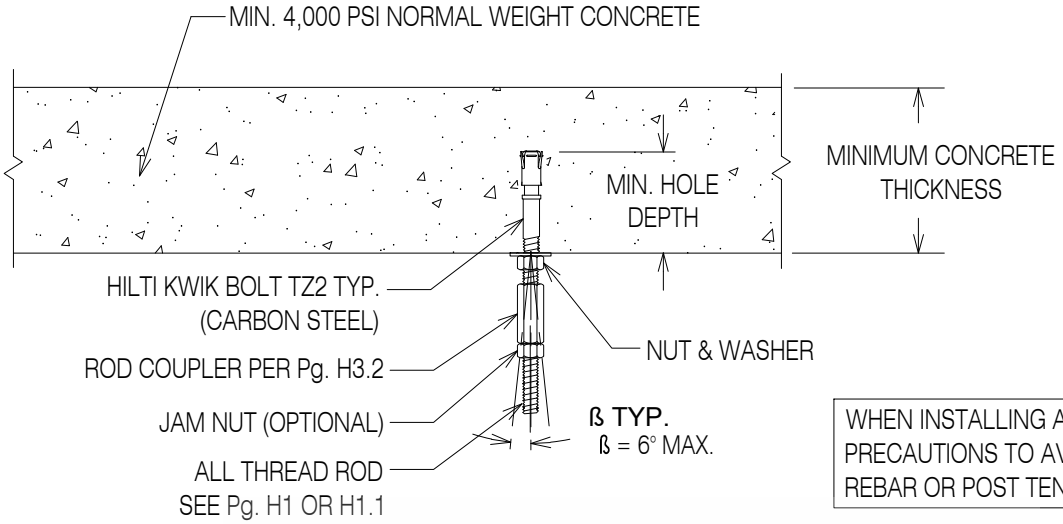

WHEN INSTALLING ANCHORS TAKE PRECAUTIONS TO AVOID CUTTING REBAR OR POST TENSIONED TENDONS.

Hilti Kwik Bolt TZ2 (Carbon Steel) Concrete Expansion Anchor, Minimum 4000 psi NWC
Seismically Qualified For Anchorage In Cracked Concrete
Seismic Design Categories D, E and F
ICC Report No. ESR-4266 (Dated May 2023), Table 4

Anchor Diameter Inch	Tension Value 3 ksi Conc Lbs.	Minimum Hole Depth Inch	Minimum Effective Embed. Inch	Minimum Concrete Thickness Inch	Installation Torque Ft-Lbs.	Minimum Edge Distance Inch	Minimum Anchor Spacing Inch
3/8	1,426	2 3/4	2	4	30	4 1/2	6
1/2	1,426	2 3/4	2	4	50	4 1/2	6
1/2	2,392	4 1/4	3 1/4	5 1/2	50	6 1/2	9 3/4
5/8	2,300	3 3/4	2 3/4	5	40	6 1/2	8 1/4
5/8	3,266	4 3/4	4	6	40	8 3/4	12
3/4	3,662	4 3/4	3 3/4	6	110	12	11 1/4

1. MINIMUM EFFECTIVE EMBEDMENT IS AFTER THE ANCHOR HAS BEEN SET.
2. ROD LOCATION WITH SINGLE, RIGID BRACE CONNECTIONS REQUIRE ADDITIONAL SEISMIC LOAD CONSIDERATIONS BEFORE APPLYING THE ABOVE VALUES. REFER TO THE PROJECT SPECIFIC ISAT BRACING LEGEND, OR C-SERIES PAGES. THIS LOAD INCREASE DOES NOT APPLY TO CABLE BRACES OR WHERE TWO RIGID BRACES CONNECTED TO A COMMON ROD ARE INSTALLED IN OPPOSING DIRECTIONS.
3. LOAD VALUES SHOWN ARE ALLOWABLE STRESS DESIGN (ASD). CAPACITIES DERIVED IN CONFORMANCE WITH ASCE 7-16 AND ACI 318.
4. DESIGN IS CONTROLLED BY SEISMIC FORCES. NON SEISMIC FORCES SUCH AS GRAVITY ARE OUTSIDE THE SCOPE OF THIS OPM.

REVIEWED FOR CODE COMPLIANCE
OPM-0403
BY: William Staehlin
DATE: 01-26-2024
CALIFORNIA BUILDING CODE 2022

SINGLE HILTI KWIK BOLT TZ2 ANCHOR
VERTICAL SUPPORT CONNECTION TO FORM POUR SLAB

REGISTERED PROFESSIONAL ENGINEER MARCIN WASAZNIK S-6612 STRUCTURAL STATE OF CALIFORNIA

ISAT
A Division of Tomarco Contractor Specialties

International Seismic Application Technology
14848 Northam Street, La Mirada, CA 90638
877-999-4728 (Toll Free) 714-523-0845 (fax)
www.isatsb.com

Rev. 2
11/21/23

Page
G5.1TZ24

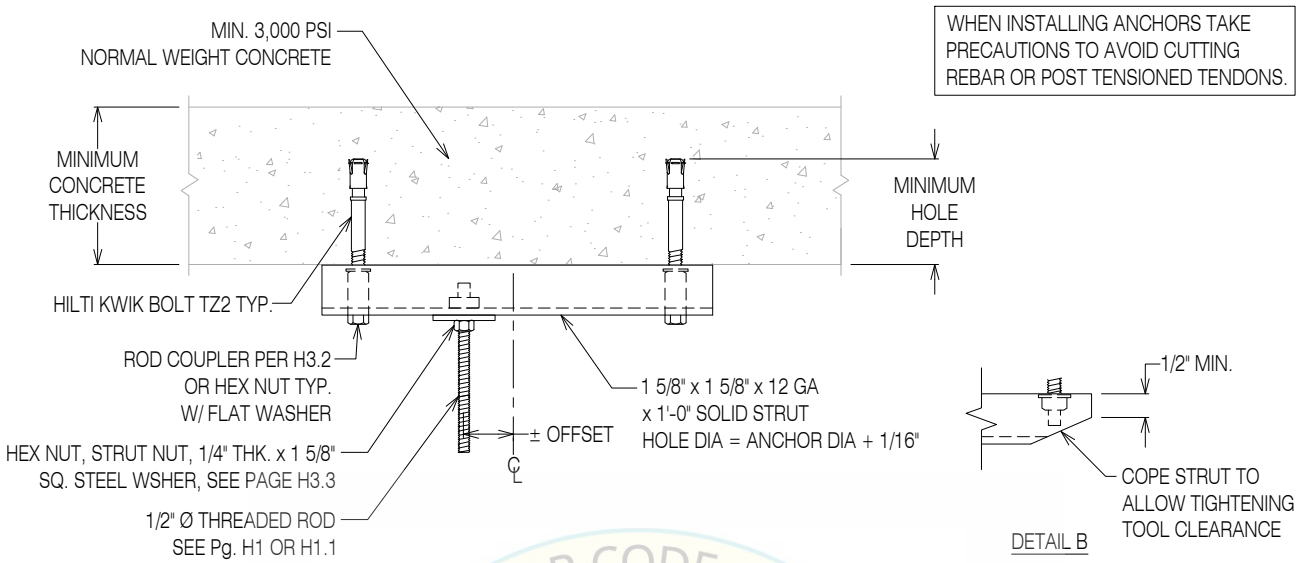

Hilti Kwik Bolt TZ2 (Carbon Steel) Concrete Expansion Anchor, Minimum 3000 psi NWC
Seismically Qualified For Anchorage In Cracked Concrete
Seismic Design Categories D, E and F
ICC Report No. ESR-4226 (Dated May 2023), Table 4

Anchor Diameter	Two Anchor Connection					Minimum Hole Depth	Minimum Effective Embed.[1]	Minimum Concrete Thickness	Max. Impact Wrench Torque	Minimum Edge Distance	Minimum Anchor Spacing
	Tension Design Value Lbs.[2, 4, 5] Vertical Support Rod Max. Offset From C.L.										
Inch	CL ± 0"	CL ± 1"	CL ± 2"	CL ± 3"	CL ± 4"	Inch	Inch	Inch	ft-Lbs.	Inch	Inch
3/8	1,996	2,059	1,765	1,544	1,372	2 3/4	2	4	30	4 1/2	6
1/2	1,996	2,059	1,765	1,544	1,372	2 3/4	2	4	50	4 1/2	6
1/2	1,996	2,079	2,376	2,589	2,302	4 1/4	3 1/4	5 1/2	50	6 1/2	9 3/4
8[3]	1,996	2,079	2,376	3,119	2,881	4 3/4	4	6	40	8 3/4	12

1. MINIMUM EFFECTIVE EMBEDMENT IS AFTER THE ANCHOR HAS BEEN SET.
2. CONNECTION DESIGN VALUE MAY BE LIMITED BY ROD STRENGTH, PAGE H1, OR STRUT NUT PULL OUT STRENGTH, PAGE H3.3.
3. USE DETAIL B.
4. ROD LOCATION WITH SINGLE, RIGID BRACE CONNECTIONS REQUIRE ADDITIONAL SEISMIC LOAD CONSIDERATIONS BEFORE APPLYING THE ABOVE VALUES. REFER TO THE PROJECT SPECIFIC ISAT BRACING LEGEND, OR C-SERIES PAGES. THIS LOAD INCREASE DOES NOT APPLY TO CABLE BRACES OR WHERE TWO RIGID BRACES CONNECTED TO A COMMON ROD ARE INSTALLED IN OPPOSING DIRECTIONS.
5. LOAD VALUES SHOWN ARE ALLOWABLE STRESS DESIGN (ASD). CAPACITIES DERIVED IN CONFORMANCE WITH ASCE 7-16 AND ACI 318.
6. DESIGN IS CONTROLLED BY SEISMIC FORCES. NON-SEISMIC FORCES SUCH AS GRAVITY ARE OUTSIDE THE SCOPE OF THIS OPM.

REVIEWED FOR CODE COMPLIANCE
HCAi
OPM-0403
BY: William Staehlin
DATE: 01-26-2024
CALIFORNIA BUILDING CODE 2022

DUAL ANCHOR HILTI KWIK BOLT TZ2
VERTICAL SUPPORT CONNECTION TO FORM POUR SLAB

REGISTERED PROFESSIONAL ENGINEER MARCIN WASAZNIK S 6612 STRUCTURAL STATE OF CALIFORNIA

ISAT
A Division of Tomarco Contractor Specialties
International Seismic Application Technology
14848 Northam Street, La Mirada, CA 90638
877-999-4728 (Toll Free) 714-523-0845 (fax)
www.isatsb.com

Rev. 2
11/21/23
Page
G5.2TZ2

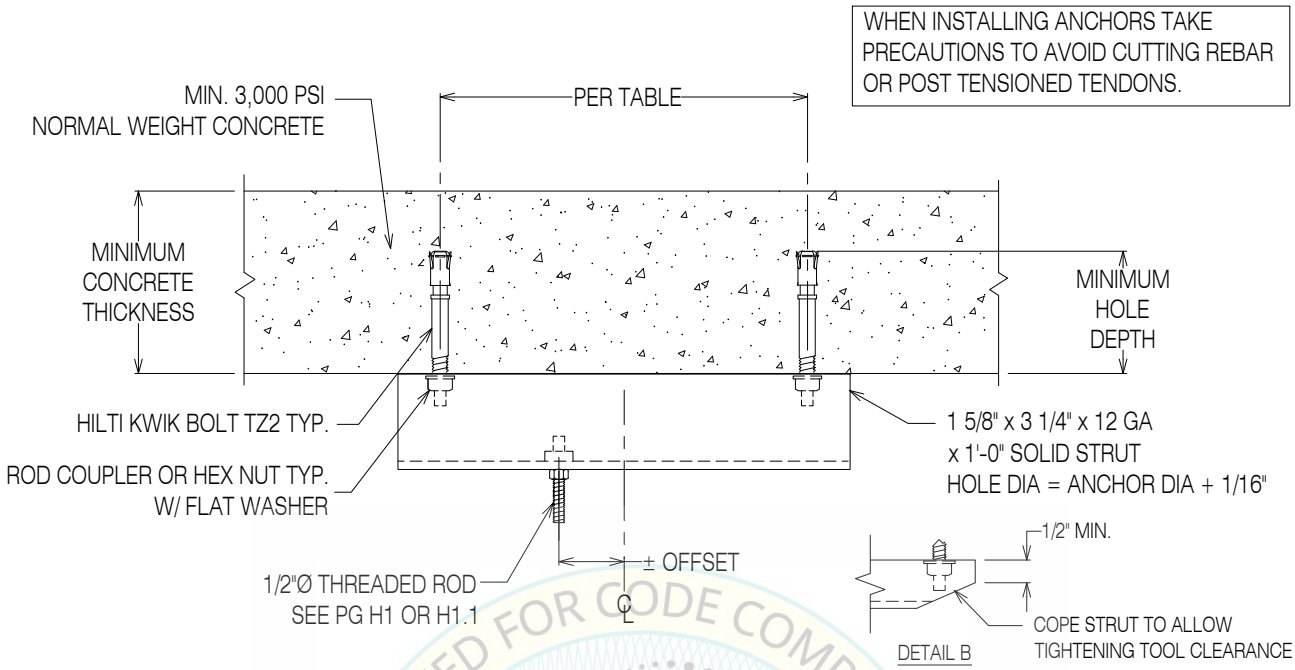

Hilti Kwik Bolt TZ2 (Carbon Steel) Concrete Expansion Anchor, Minimum 3000 psi NWC
Seismically Qualified For Anchorage In Cracked Concrete
Seismic Design Categories D, E and F
ICC Report No. ESR-4226 (Dated May 2023), Table 4

Anchor Diameter Inch	Two Anchor Connection Tension Design Value Lbs. [2, 3, 4, 5] Vertical Support Rod Max. Offset From C.L. CL ± 0"	CL ± 1"	CL ± 2"	CL ± 3"	CL ± 4"	Minimum Hole Depth Inch	Minimum Effective Embed. [1] Inch	Minimum Concrete Thickness Inch	Installation Torque Ft-Lbs.	Minimum Edge Distance Inch	Minimum Anchor Spacing Inch
1/2	3,253	3,253	2,959	2,589	2,302	4 1/4	3 1/4	5 1/2	50	6 1/2	9 3/4
5/8[3]	3,253	3,253	3,253	3,241	2,881	4 3/4	4	6	40	8 3/4	12

1. MINIMUM EFFECTIVE EMBEDMENT IS AFTER THE ANCHOR HAS BEEN SET.
2. CONNECTION DESIGN VALUE MAY BE LIMITED BY ROD STRENGTH, PAGE H1, OR STRUT NUT PULL OUT STRENGTH, PAGE H3.3.
3. USE DETAIL B.
4. ROD LOCATION WITH SINGLE, RIGID BRACE CONNECTIONS REQUIRE ADDITIONAL SEISMIC LOAD CONSIDERATIONS BEFORE APPLYING THE ABOVE VALUES. REFER TO THE PROJECT SPECIFIC ISAT BRACING LEGEND, OR C-SERIES PAGES. THIS LOAD INCREASE DOES NOT APPLY TO CABLE BRACES OR WHERE TWO RIGID BRACES CONNECTED TO A COMMON ROD ARE INSTALLED IN OPPOSING DIRECTIONS.
5. LOAD VALUES SHOWN ARE ALLOWABLE STRESS DESIGN (ASD). CAPACITIES DERIVED IN CONFORMANCE WITH ASCE 7-16 AND ACI 318.
6. DESIGN IS CONTROLLED BY SEISMIC FORCES. NON-SEISMIC FORCES SUCH AS GRAVITY ARE OUTSIDE THE SCOPE OF THIS OPM.

DUAL ANCHOR HILTI KWIK BOLT TZ2 WITH 1 5/8" x 3 1/4" STRUT VERTICAL SUPPORT CONNECTION TO FORM POUR SLAB

REGISTERED PROFESSIONAL ENGINEER MARCIN WASAZNIK S-6612 STRUCTURAL STATE OF CALIFORNIA

ISAT
A Division of Tomarco Contractor Specialties
International Seismic Application Technology
14848 Northam Street, La Mirada, CA 90638
877-999-4728 (Toll Free) 714-523-0845 (fax)
www.isatsb.com

Rev. 2
11/21/23
Page
G5.3TZ2

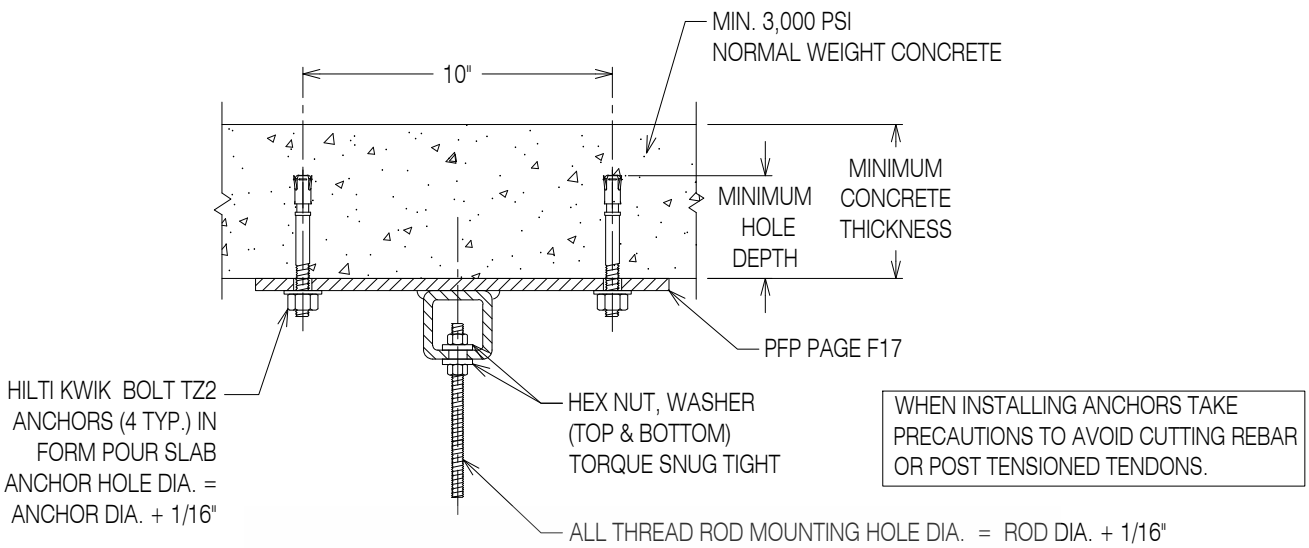

REVIEWED FOR CODE COMPLIANCE
HCAI
OPM-0403
BY: William Staehlin
DATE: 01-26-2024
CALIFORNIA BUILDING CODE, 2022

Hilti Kwik Bolt TZ2 (Carbon Steel) Concrete Expansion Anchor, Minimum 3000 psi LWC
Seismically Qualified For Anchorage In Cracked Concrete
Seismic Design Categories D, E and F
ICC Report No. ESR-4266 (Dated May 2023), Table 4

Anchor Diameter Inch	Maximum Vertical Load Lbs.	Minimum Hole Depth Inch	Minimum Effective Embed.[1] Inch	Minimum Concrete Thickness Inch	Installation Torque Ft-Lbs.	Minimum Edge Distance Inch	Plate Number Page F17	Maximum Rod Diameter Inch
3/8	2340	2 3/4	2	4	30	4 1/2	G535	5/8
1/2	3500	2 3/4	2	4	50	4 1/2	G545	3/4
1/2	4860	4 1/4	3 1/4	5 1/2	50	6 1/2	G546	7/8
5/8	5536	4 3/4	4	6	40	8 3/4	G547	1

1. MINIMUM EFFECTIVE EMBEDMENT IS AFTER THE ANCHOR HAS BEEN SET.
2. ROD LOCATION WITH SINGLE, RIGID BRACE CONNECTIONS REQUIRE ADDITIONAL SEISMIC LOAD CONSIDERATIONS BEFORE APPLYING THE ABOVE VALUES. REFER TO THE PROJECT SPECIFIC ISAT BRACING LEGEND, OR C-SERIES PAGES. THIS LOAD INCREASE DOES NOT APPLY TO CABLE BRACES OR WHERE TWO RIGID BRACES CONNECTED TO A COMMON ROD ARE INSTALLED IN OPPOSING DIRECTIONS.
3. LOAD VALUES SHOWN ARE ALLOWABLE STRESS DESIGN (ASD). CAPACITIES DERIVED IN CONFORMANCE WITH ASCE 7-16 AND ACI 318. Ωo=2.0
4. DESIGN IS CONTROLLED BY SEISMIC FORCES. NON-SEISMIC FORCES SUCH AS GRAVITY ARE OUTSIDE THE SCOPE OF THIS OPM.

4 - ANCHOR HILTI KWIK BOLT TZ2
VERTICAL SUPPORT CONNECTION TO FORM POUR SLAB

REGISTERED PROFESSIONAL ENGINEER
MARCIN WASAZNIK
S 6612
STRUCTURAL
STATE OF CALIFORNIA

ISAT
A Division of Tomarco Contractor Specialties

International Seismic Application Technology
14848 Northam Street, La Mirada, CA 90638
877-999-4728 (Toll Free) 714-523-0845 (fax)
www.isatsb.com

Rev. 2
11/21/23
Page
G5.4TZ2

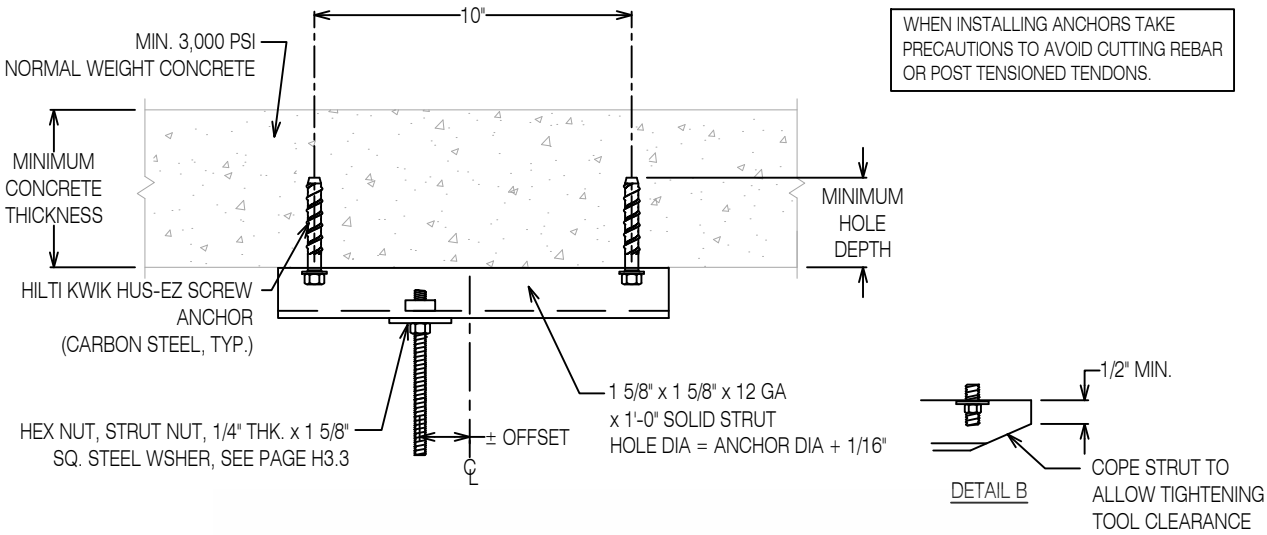

WHEN INSTALLING ANCHORS TAKE PRECAUTIONS TO AVOID CUTTING REBAR OR POST TENSIONED TENDONS.

Seismically Qualified For Anchorage In Cracked Concrete
Seismic Design Categories D, E and F
Hilti Kwik HUS-EZ Screw Anchor, Minimum 3000 psi NWC
ICC Report No. ESR-3027 (Dated December 2017), Table 2, 3 and 4

Anchor Diameter	Two Anchor Connection Tension Design Value Lbs. [2, 4, 5] Vertical Support Rod Max. Offset From C.L.					Minimum Hole Depth	Minimum Effective Embed.[1]	Minimum Concrete Thickness	Max. Impact Wrench Torque	Minimum Edge Distance	Minimum Anchor Spacing
Inch	CL ± 0"	CL ± 1"	CL ± 2"	CL ± 3"	CL ± 4"	Inch	Inch	Inch	Ft-Lbs.	Inch	Inch
1/4	445	371	318	278	247	2	1.18	3 1/4	114	4.00	6.75
3/8	603	503	431	377	335	1 7/8	1.11	3 1/4	114	4.00	6.75
1/2	1,325	1,104	946	828	736	2 5/8	1.52	4 1/2	137	2.75	6.75
1/2	1,996	2,079	2,376	2,553	2,270	4 5/8	3.22	6 3/4	450	5.25	9.66
5/8 [3]	1,996	2,079	2,376	3,119	2,791	5 3/8	3.88	7	450	5.82	11.64

1. MINIMUM EFFECTIVE EMBEDMENT IS AFTER THE ANCHOR HAS BEEN SET.
2. CONNECTION DESIGN VALUE MAY BE LIMITED BY ROD STRENGTH, PAGE H1, OR STRUT NUT PULL OUT STRENGTH, PAGE H3.3.
3. USE DETAIL B.
4. ROD LOCATIONS WITH SINGLE, RIGID BRACE CONNECTIONS REQUIRE ADDITIONAL SEISMIC LOAD CONSIDERATIONS BEFORE APPLYING THE ABOVE VALUES. REFER TO PROJECT SPECIFIC ISAT BRACING LEGEND. THIS LOAD INCREASE DOES NOT APPLY TO CABLE BRACES OR WHERE TWO RIGID BRACES CONNECTED TO A COMMON ROD ARE INSTALLED IN OPPOSING DIRECTIONS.
5. LOAD VALUES SHOWN ARE ALLOWABLE STRESS DESIGN (ASD). CAPACITIES DERIVED IN CONFORMANCE WITH ASCE 7-10, PIN 62 & ACI 318-11, Appendix D.

REVIEWED FOR CODE COMPLIANCE
OPM-0403
BY: William Staehlin
DATE: 01-26-2024
CALIFORNIA BUILDING CODE, 2022

DUAL ANCHOR HILTI HUS-EZ SCREW ANCHOR VERTICAL SUPPORT CONNECTION TO FORM POUR SLAB

REGISTERED PROFESSIONAL ENGINEER MARCIN WASAZNIK S 6612 STRUCTURAL STATE OF CALIFORNIA

ISAT
A Division of Tomarco Contractor Specialties
International Seismic Application Technology
14848 Northam Street, La Mirada, CA 90638
877-999-4728 (Toll Free) 714-523-0845 (fax)
www.isatsb.com

Rev. 7
09/18/18

Page
G5.2HUS3

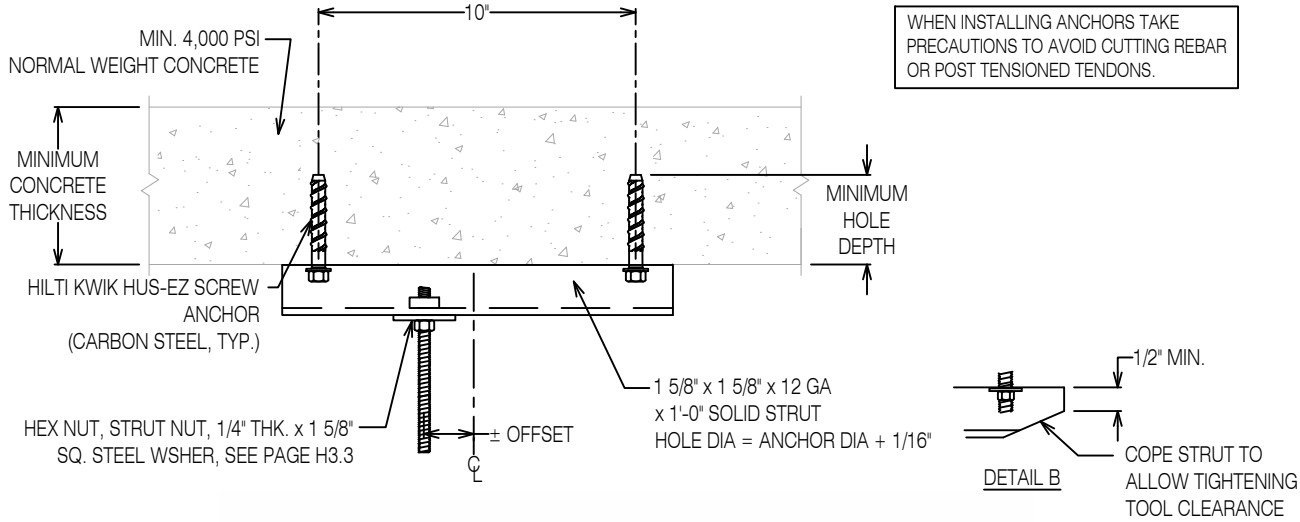

WHEN INSTALLING ANCHORS TAKE PRECAUTIONS TO AVOID CUTTING REBAR OR POST TENSIONED TENDONS.

Seismically Qualified For Anchorage In Cracked Concrete
Seismic Design Categories D, E and F
Hilti Kwik HUS-EZ Screw Anchor, Minimum 4000 psi NWC
ICC Report No. ESR-3027 (Dated December 2017), Table 2, 3 and 4

Anchor Diameter	Two Anchor Connection Tension Design Value Lbs. [2, 4, 5] Vertical Support Rod Max. Offset From C.L.					Minimum Hole Depth	Minimum Effective Embed.[1]	Minimum Concrete Thickness	Max. Impact Wrench Torque	Minimum Edge Distance	Minimum Anchor Spacing
Inch	CL ± 0"	CL ± 1"	CL ± 2"	CL ± 3"	CL ± 4"	Inch	Inch	Inch	Ft-Lbs.	Inch	Inch
1/4	514	428	367	321	285	2	1.18	3 1/4	114	4.00	6.75
3/8	696	580	497	435	387	1 7/8	1.11	3 1/4	114	4.00	6.75
1/2	1,530	1,275	1,093	956	850	2 5/8	1.52	4 1/2	137	2.75	6.75
1/2	1,996	2,079	2,376	2,948	2,621	4 5/8	3.22	6 3/4	450	5.25	9.66
5/8 [3]	1,996	2,079	2,376	3,119	3,222	5 3/8	3.88	7	450	5.82	11.64

1. MINIMUM EFFECTIVE EMBEDMENT IS AFTER THE ANCHOR HAS BEEN SET.
2. CONNECTION DESIGN VALUE MAY BE LIMITED BY ROD STRENGTH, PAGE H1, OR STRUT NUT PULL OUT STRENGTH, PAGE H3.3.
3. USE DETAIL B.
4. ROD LOCATIONS WITH SINGLE, RIGID BRACE CONNECTIONS REQUIRE ADDITIONAL SEISMIC LOAD CONSIDERATIONS BEFORE APPLYING THE ABOVE VALUES. REFER TO PROJECT SPECIFIC ISAT BRACING LEGEND. THIS LOAD INCREASE DOES NOT APPLY TO CABLE BRACES OR WHERE TWO RIGID BRACES CONNECTED TO A COMMON ROD ARE INSTALLED IN OPPOSING DIRECTIONS.
5. LOAD VALUES SHOWN ARE ALLOWABLE STRESS DESIGN (ASD). CAPACITIES DERIVED IN CONFORMANCE WITH ASCE 7-10, PIN 62 & ACI 318-11, Appendix D.

REVIEWED FOR CODE COMPLIANCE
OPM-0403
BY: William Staehlin
DATE: 01-26-2024
OF THE CITY OF LOS ANGELES, 2020 RMC

DUAL ANCHOR HILTI HUS-EZ SCREW ANCHOR
VERTICAL SUPPORT CONNECTION TO FORM POUR SLAB

REGISTERED PROFESSIONAL ENGINEER
MARCIN WASAZNIK
S 6612
STRUCTURAL
STATE OF CALIFORNIA

ISAT
A Division of Tomarco Contractor Specialties

International Seismic Application Technology
14848 Northam Street, La Mirada, CA 90638
877-999-4728 (Toll Free) 714-523-0845 (fax)
www.isatsb.com

Rev. 7
09/18/18

Page
G5.2HUS4

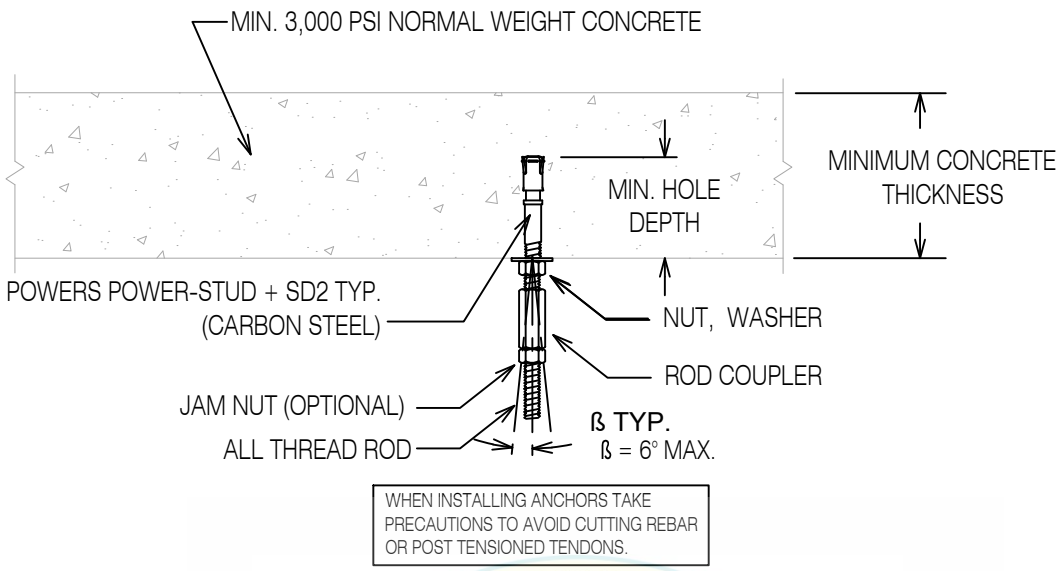

Seismically Qualified For Anchorage In Cracked Concrete
Seismic Design Categories D, E and F
Powers Power-Stud+ SD2 Concrete Expansion Anchor, Minimum 3000 psi NWC
ICC Report No. ESR-2502 (Dated May 2017), Table 1, Table 3 and Table 4

Anchor Diameter Inch	Tension Value 3 ksi Conc Lbs.	Minimum Hole Depth Inch	Minimum Effective Embed. Inch	Minimum Concrete Thickness Inch	Installation Torque Ft-Lbs.	Minimum Edge Distance Inch	Minimum Anchor Spacing Inch
3/8	874	2 5/8	2	4	20	4 1/2	6
1/2	1,000	2 3/4	2	4 1/2	40	4 1/2	6
1/2	1,820	4	3 1/4	5 3/4	40	6 1/2	9 3/4
5/8	2,071	4 1/4	3 1/4	5 3/4	60	6 1/2	9 3/4
5/8	3,098	5 1/4	4 1/4	6 1/2	60	8 3/4	12 3/4
3/4	2,567	5	3 3/4	7	110	12	11 1/4

1. MINIMUM EFFECTIVE EMBEDMENT IS AFTER THE ANCHOR HAS BEEN SET.
2. ROD LOCATIONS WITH SINGLE, RIGID BRACE CONNECTIONS REQUIRE ADDITIONAL SEISMIC LOAD CONSIDERATIONS BEFORE APPLYING THE ABOVE VALUES. REFER TO PROJECT SPECIFIC ISAT BRACING LEGEND. THIS LOAD INCREASE DOES NOT APPLY TO CABLE BRACES OR WHERE TWO RIGID BRACES CONNECTED TO A COMMON ROD ARE INSTALLED IN OPPOSING DIRECTIONS.
3. LOAD VALUES SHOWN ARE ALLOWABLE STRESS DESIGN (ASD). CAPACITIES DERIVED IN CONFORMANCE WITH ASCE 7-10, PIN 62 & ACI 318-11, Appendix D.

REVIEWED FOR CODE COMPLIANCE
OPM-0403
BY: William Staehlin
DATE: 01-26-2024
CALIFORNIA BUILDING CODE 2022

SINGLE POWERS POWER-STUD+ SD2 ANCHOR
VERTICAL SUPPORT CONNECTION TO FORM POUR SLAB

ISAT
A Division of Tomarco Contractor Specialties
International Seismic Application Technology
14848 Northam Street, La Mirada, CA 90638
877-999-4728 (Toll Free) 714-523-0845 (fax)
www.isatsb.com

Rev. 7
06/18/18

Page
G5.1SD23

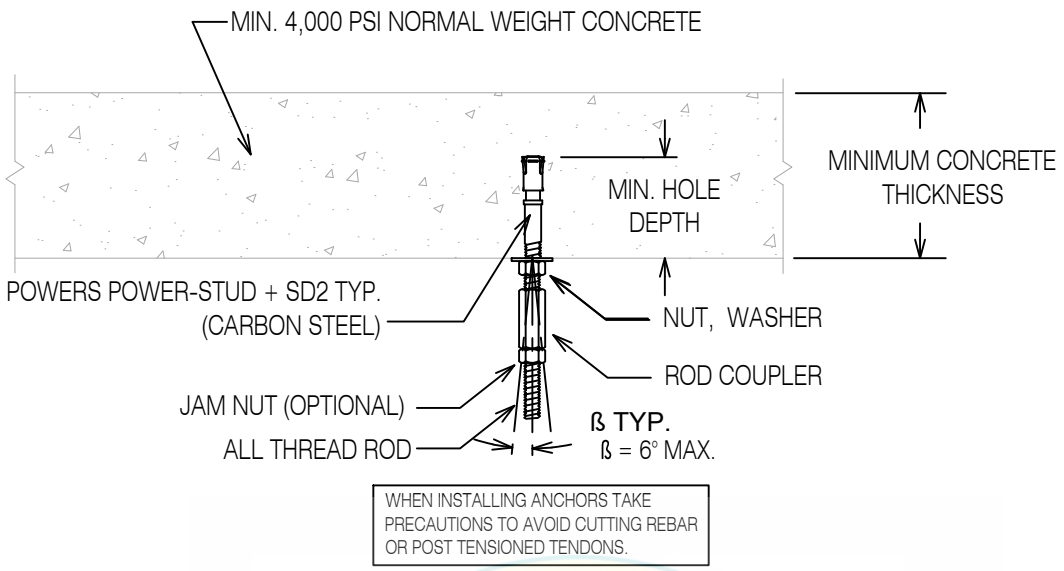

Seismically Qualified For Anchorage In Cracked Concrete
Seismic Design Categories D, E and F
Powers Power-Stud+ SD2 Concrete Expansion Anchor, Minimum 4000 psi NWC
ICC Report No. ESR-2502 (Dated May 2017), Table 1, Table 3 and Table 4

Anchor Diameter Inch	Tension Value 4 ksi Conc Lbs.	Minimum Hole Depth Inch	Minimum Effective Embed. Inch	Minimum Concrete Thickness Inch	Installation Torque Ft-Lbs.	Minimum Edge Distance Inch	Minimum Anchor Spacing Inch
3/8	961	2 5/8	2	4	20	4 1/2	6
1/2	1,155	2 3/4	2	4 1/2	40	4 1/2	6
1/2	2,101	4	3 1/4	5 3/4	40	6 1/2	9 3/4
5/8	2,392	4 1/4	3 1/4	5 3/4	60	6 1/2	9 3/4
5/8	3,577	5 1/4	4 1/4	6 1/2	60	8 3/4	12 3/4
3/4	2,965	5	3 3/4	7	110	12	11 1/4

1. MINIMUM EFFECTIVE EMBEDMENT IS AFTER THE ANCHOR HAS BEEN SET.
2. ROD LOCATIONS WITH SINGLE, RIGID BRACE CONNECTIONS REQUIRE ADDITIONAL SEISMIC LOAD CONSIDERATIONS BEFORE APPLYING THE ABOVE VALUES. REFER TO PROJECT SPECIFIC ISAT BRACING LEGEND. THIS LOAD INCREASE DOES NOT APPLY TO CABLE BRACES OR WHERE TWO RIGID BRACES CONNECTED TO A COMMON ROD ARE INSTALLED IN OPPOSING DIRECTIONS.
3. LOAD VALUES SHOWN ARE ALLOWABLE STRESS DESIGN (ASD). CAPACITIES DERIVED IN CONFORMANCE WITH ASCE 7-10, PIN 62 & ACI 318-11, Appendix D.

REVIEWED FOR CODE COMPLIANCE
OPM-0403
BY: William Staehlin
DATE: 01-26-2024
CALIFORNIA BUILDING CODE 2022

SINGLE POWERS POWER-STUD+ SD2 ANCHOR
VERTICAL SUPPORT CONNECTION TO FORM POUR SLAB

REGISTERED PROFESSIONAL ENGINEER
MARCIN WASAZNIK
S 6612
STRUCTURAL
STATE OF CALIFORNIA

ISAT
A Division of Tomarco Contractor Specialties

International Seismic Application Technology
14848 Northam Street, La Mirada, CA 90638
877-999-4728 (Toll Free) 714-523-0845 (fax)
www.isatsb.com

Rev. 7
06/18/18

Page
G5.1SD24

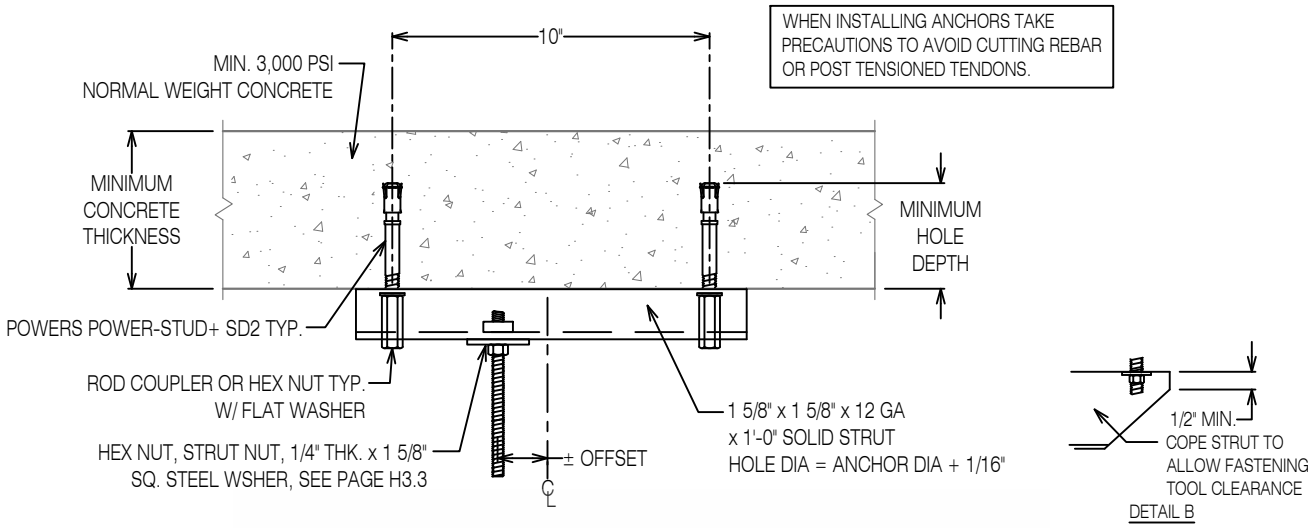

REVIEWED FOR CODE COMPLIANCE
HCAi
OPM-0403
BY: William Staehlin
DATE: 01-26-2024
CALIFORNIA BUILDING CODE, 2022

Seismically Qualified For Anchorage In Cracked Concrete
Seismic Design Categories D, E and F
Powers Power-Stud+ SD2 Concrete Expansion Anchor, Minimum 3000 psi NWC
ICC Report No. ESR-2502 (Dated May 2018), Table 1, Table 3 and Table 4

Anchor Diameter	Two Anchor Connection Tension Design Value Lbs. [2, 4, 5] Vertical Support Rod Max. Offset From C.L.					Minimum Hole Depth	Minimum Effective Embed.[1]	Minimum Concrete Thickness	Installation Torque	Minimum Edge Distance	Minimum Anchor Spacing
Inch	CL ± 0"	CL ± 1"	CL ± 2"	CL ± 3"	CL ± 4"	Inch	Inch	Inch	Ft-Lbs.	Inch	Inch
3/8	1,747	1,456	1,248	1,092	971	2 5/8	2	4	20	4 1/2	6
1/2	1,996	1,667	1,429	1,250	1,111	2 3/4	2	4 1/2	40	4 1/2	6
1/2	1,996	2,079	2,376	2,275	2,022	4	3 1/4	5 3/4	40	6 1/2	9 3/4
5/8 [3]	1,996	2,079	2,376	3,119	3,071	5 1/4	4 1/4	6 1/2	60	8 3/4	12 3/4

1. MINIMUM EFFECTIVE EMBEDMENT IS AFTER THE ANCHOR HAS BEEN SET.
2. CONNECTION DESIGN VALUE MAY BE LIMITED BY ROD STRENGTH, PAGE H1, OR STRUT NUT PULL OUT STRENGTH, PAGE H3.3.
3. USE DETAIL B.
4. ROD LOCATIONS WITH SINGLE, RIGID BRACE CONNECTIONS REQUIRE ADDITIONAL SEISMIC LOAD CONSIDERATIONS BEFORE APPLYING THE ABOVE VALUES. REFER TO PROJECT SPECIFIC ISAT BRACING LEGEND. THIS LOAD INCREASE DOES NOT APPLY TO CABLE BRACES OR WHERE TWO RIGID BRACES CONNECTED TO A COMMON ROD ARE INSTALLED IN OPPOSING DIRECTIONS.
5. LOAD VALUES SHOWN ARE ALLOWABLE STRESS DESIGN (ASD). CAPACITIES DERIVED IN CONFORMANCE WITH ASCE 7-10, PIN 62 & ACI 318-11, Appendix D.

DUAL ANCHOR POWERS POWER-STUD+ SD2
VERTICAL SUPPORT CONNECTIONTO FORM POUR SLAB

REGISTERED PROFESSIONAL ENGINEER MARCIN WASAZNIK S 6612 STRUCTURAL STATE OF CALIFORNIA

ISAT
A Division of Tomarco Contractor Specialties

International Seismic Application Technology
14848 Northam Street, La Mirada, CA 90638
877-999-4728 (Toll Free) 714-523-0845 (fax)
www.isatsb.com

Rev. 7
09/18/18

Page
G5.2SD2

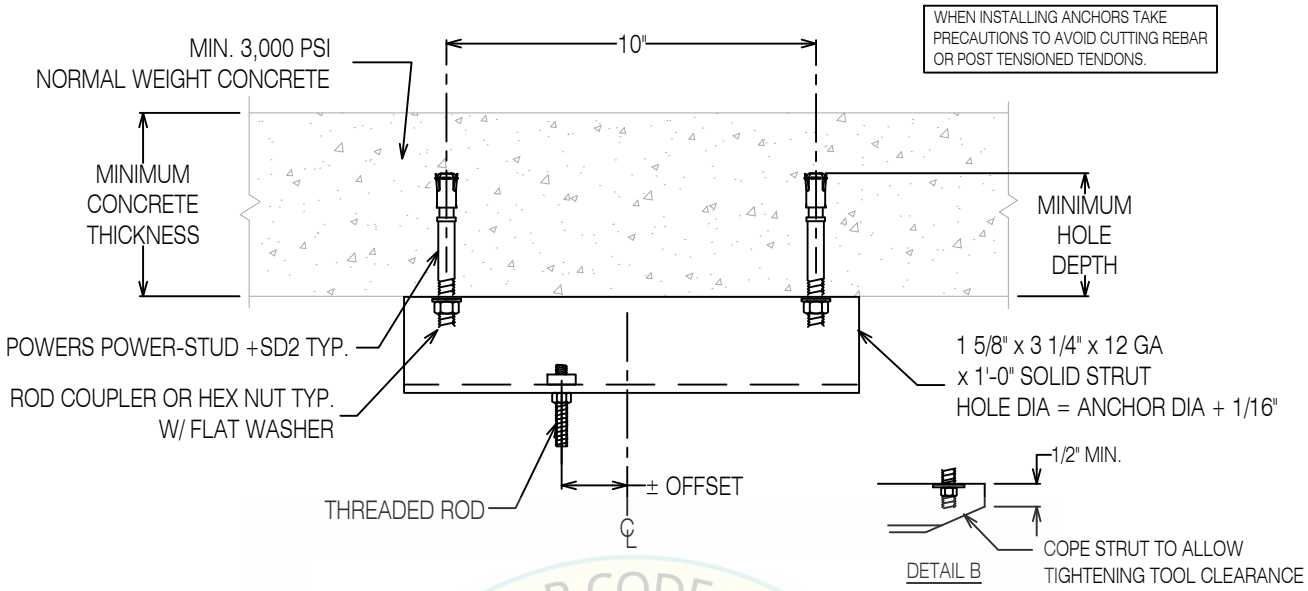

REVIEWED FOR CODE COMPLIANCE
HCAi
OPM-0403
BY: William Staehlin
DATE: 01-26-2024
CALIFORNIA BUILDING CODE 2022

Seismically Qualified For Anchorage In Cracked Concrete
Seismic Design Categories D, E and F
Powers Power-Stud+ SD2 Concrete Expansion Anchor, Minimum 3000 psi NWC
ICC Report No. ESR-2502 (Dated May 2018), Table 1, Table 3 and Table 4

Anchor Diameter Inch	Two Anchor Connection Tension Design Value Lbs. [2, 4, 5] Vertical Support Rod Max. Offset From C.L.					Minimum Hole Depth Inch	Minimum Effective Embed. [1] Inch	Minimum Concrete Thickness Inch	Installation Torque Ft-Lbs.	Minimum Edge Distance Inch	Minimum Anchor Spacing Inch
	CL ± 0"	CL ± 1"	CL ± 2"	CL ± 3"	CL ± 4"						
1/2	3,250	3,033	2,600	2,275	2,022	4	3 1/4	5 3/4	40	6 1/2	9 3/4
5/8 [3]	3,250	3,250	3,250	3,250	3,071	5 1/4	4 1/4	6 1/2	60	8 3/4	12 3/4

1. MINIMUM EFFECTIVE EMBEDMENT IS AFTER THE ANCHOR HAS BEEN SET.
2. CONNECTION DESIGN VALUE MAY BE LIMITED BY ROD STRENGTH, PAGE H1, OR STRUT NUT PULL OUT STRENGTH, PAGE H3.3.
3. USE DETAIL B.
4. ROD LOCATIONS WITH SINGLE, RIGID BRACE CONNECTIONS REQUIRE ADDITIONAL SEISMIC LOAD CONSIDERATIONS BEFORE APPLYING THE ABOVE VALUES. REFER TO PROJECT SPECIFIC ISAT BRACING LEGEND. THIS LOAD INCREASE DOES NOT APPLY TO CABLE BRACES OR WHERE TWO RIGID BRACES CONNECTED TO A COMMON ROD ARE INSTALLED IN OPPOSING DIRECTIONS.
5. LOAD VALUES SHOWN ARE ALLOWABLE STRESS DESIGN (ASD). CAPACITIES DERIVED IN CONFORMANCE WITH ASCE 7-10, PIN 62 & ACI 318-11, Appendix D.

DUAL ANCHOR POWERS POWER-STUD +SD2
WITH 1 5/8" x 3 1/4" STRUT
VERTICAL SUPPORT CONNECTION TO FORM POUR SLAB

REGISTERED PROFESSIONAL ENGINEER MARCIN WASAZNIK S 6612 STRUCTURAL STATE OF CALIFORNIA

ISAT
A Division of Tomarco Contractor Specialties

International Seismic Application Technology
14848 Northam Street, La Mirada, CA 90638
877-999-4728 (Toll Free) 714-523-0845 (fax)
www.isatsb.com

Rev. 7
09/18/18
Page
G5.3SD2

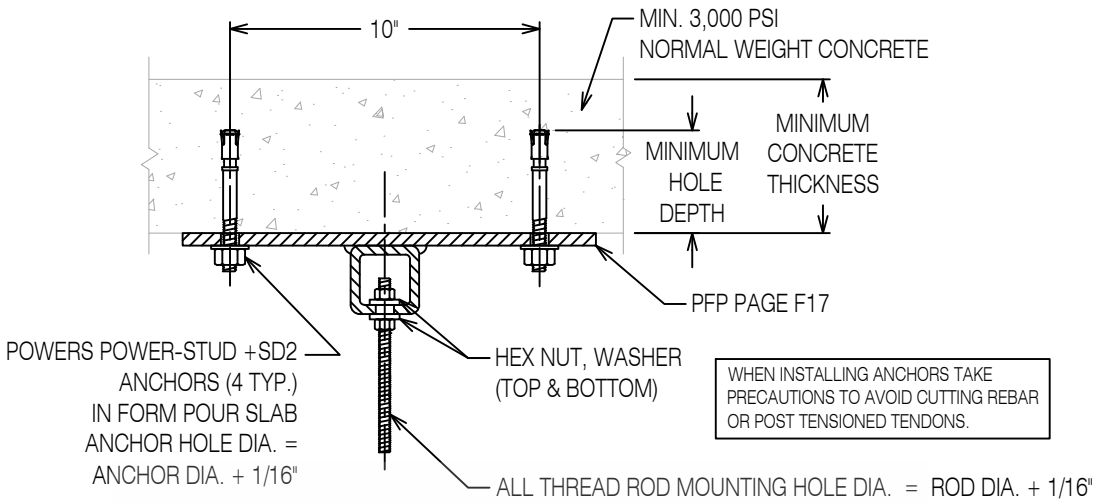

REVIEWED FOR CODE COMPLIANCE
HCAi
OPM-0403
BY: William Staehlin
DATE: 01/26/2024
CALIFORNIA BUILDING CODE, 2022

Seismically Qualified For Anchorage In Cracked Concrete
Seismic Design Categories D, E and F
Powers Power-Stud+ SD2 Concrete Expansion Anchor, Minimum 3000 psi NWC
ICC Report No. ESR-2502 (Dated May 2017), Table 1, Table 3 and Table 4

Anchor Diameter Inch	Maximum Vertical Load Lbs.	Minimum Hole Depth Inch	Minimum Effective Embed.[1] Inch	Minimum Concrete Thickness Inch	Installation Torque Ft-Lbs.	Minimum Edge Distance Inch	Plate Number Page F17	Maximum Rod Diameter Inch
3/8	2,340	2 5/8	2	4	20	4 1/2	G535	5/8
1/2	3,500	2 3/4	2	4 1/2	40	4 1/2	G545	3/4
1/2	4,860	4	3 1/4	5 3/4	40	6 1/2	G546	7/8
5/8	5,536	5 1/4	4 1/4	6 1/2	60	8 3/4	G547	1

1. MINIMUM EFFECTIVE EMBEDMENT IS AFTER THE ANCHOR HAS BEEN SET.
2. ROD LOCATIONS WITH SINGLE, RIGID BRACE CONNECTIONS REQUIRE ADDITIONAL SEISMIC LOAD CONSIDERATIONS BEFORE APPLYING THE ABOVE VALUES. REFER TO PROJECT SPECIFIC ISAT BRACING LEGEND. THIS LOAD INCREASE DOES NOT APPLY TO CABLE BRACES OR WHERE TWO RIGID BRACES CONNECTED TO A COMMON ROD ARE INSTALLED IN OPPOSING DIRECTIONS.
3. LOAD VALUES SHOWN ARE ALLOWABLE STRESS DESIGN (ASD). CAPACITIES DERIVED IN CONFORMANCE WITH ASCE 7-10, PIN 62 & ACI 318-11, Appendix D.

4 - ANCHOR POWERS POWER-STUD +SD2
VERTICAL SUPPORT CONNECTION TO FORM POUR SLAB

REGISTERED PROFESSIONAL ENGINEER
MARCIN WASAZNIK
S 6612
STRUCTURAL
STATE OF CALIFORNIA

ISAT
A Division of Tomarco Contractor Specialties

International Seismic Application Technology
14848 Northam Street, La Mirada, CA 90638
877-999-4728 (Toll Free) 714-523-0845 (fax)
www.isatsb.com

Rev. 7
06/18/18

Page
G5.4SD2

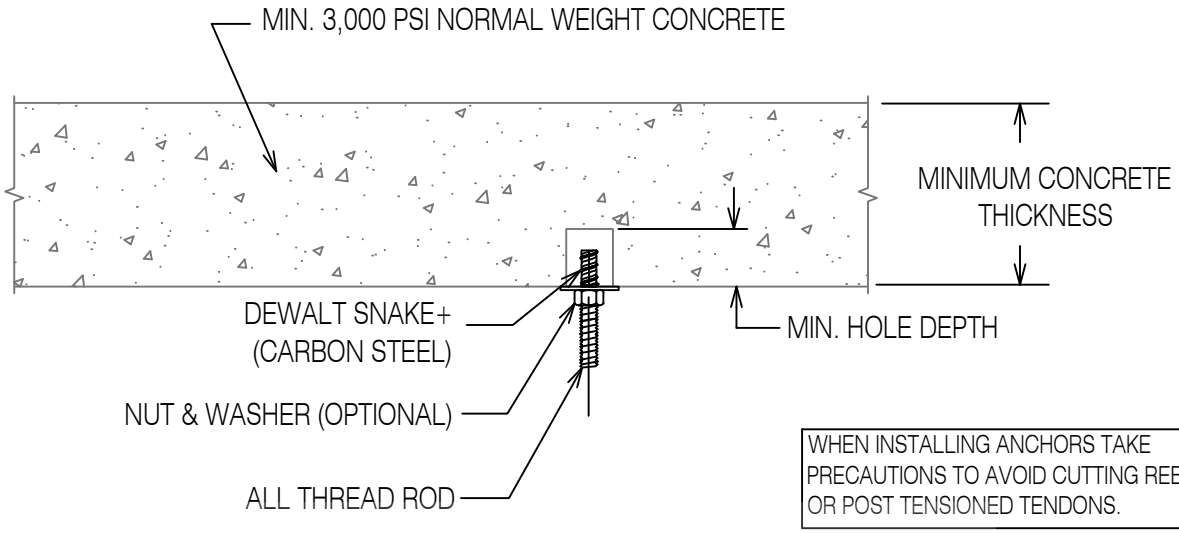

SINGLE ANCHOR VERTICAL SUPPORT CONNECTION DETAILS

Normal Weight Concrete (Minimum 3,000 psi)
Seismically Qualified for Anchorage In Cracked Concrete
Dewalt Snake+ Concrete Screw Anchor
ICC Report No. ESR-2272 (Dated Dec. 2022), Table 1.
Special Inspection Required By Manufacturer's ICC Report

Anchor Diameter Inch	Tension Design Value Lbs.	Minimum Hole Depth [1] Inch	Minimum Effective Embedment [2] Inch	Minimum Concrete Thickness Inch	Minimum Anchor Spacing Inch	Edge Distance Inch	Screwdriver Installation Max. Torque Ft-Lbs.	Rod or Bolt Installation Max. Torque Ft-Lbs.
3/8	408	2	1 1/8	4	3	3	345	8

1. MINIMUM HOLE DEPTH IS TO BE VERIFIED BY THE INSPECTOR.
2. ROD LOCATIONS WITH SINGLE, RIGID BRACE CONNECTIONS REQUIRE ADDITIONAL SEISMIC LOAD CONSIDERATIONS BEFORE APPLYING THE ABOVE VALUES. REFER TO PROJECT SPECIFIC ISAT BRACING LEGEND.
   THIS LOAD INCREASE DOES NOT APPLY TO CABLE BRACES OR WHERE TWO RIGID BRACES CONNECTED TO A COMMON ROD ARE INSTALLED IN OPPOSING DIRECTIONS.

SINGLE DEWALT SNAKE+ VERTICAL SUPPORT CONNECTION

REGISTERED PROFESSIONAL ENGINEER MARCIN WASAZNIK S 6612 STRUCTURAL STATE OF CALIFORNIA

ISAT
A Division of Tomarco Contractor Specialties
International Seismic Application Technology
14848 Northam Street, La Mirada, CA 90638
877-999-4728 (Toll Free) 714-523-0845 (fax)
www.isatsb.com

Rev. 11
11/21/23
Page
G5.1SN

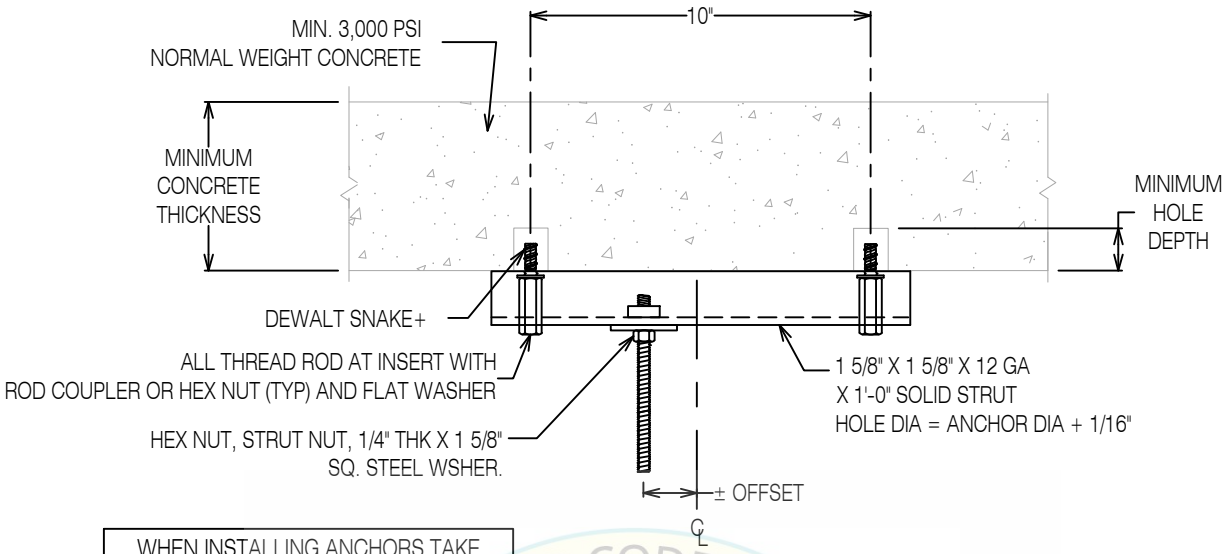

WHEN INSTALLING ANCHORS TAKE PRECAUTIONS TO AVOID CUTTING REBAR OR POST TENSIONED TENDONS.

ALL COMPONENTRY FROM ISAT APPROVED MANUFACTURERS. SEE PAGE H3.3.

REVIEWED FOR CODE COMPLIANCE BY William Staehlin
HCAi
OPM-0403
DATE: 01-26-2024
ICC-ES ACCEPTANCE CRITERIA MODEL NO. 22

DUAL ANCHOR VERTICAL SUPPORT CONNECTION DETAILS

Seismically Qualified for Anchorage In Cracked Concrete
Dewalt Snake+ Concrete Screw Anchor
ICC Report No. ESR-2272 (Dated Dec. 2022), Table 1
Special Inspection Required by Manufacturer's ICC Report

Anchor Diameter Inch	Minimum Hole Depth [1] Inch	Minimum Effective Embedment [2] Inch	Minimum Concrete Thickness Inch	Screwdriver Installation Max. Torque Ft-Lbs.	Rod or Bolt Installation Max. Torque Ft-Lbs.	Minimum Anchor Spacing Inch	Edge Distance Inch	Two Anchor Connection Tension Design Value Lbs. Vertical Support Rod Max. Offset From C.L.				
								CL ± 0"	CL ± 1"	CL ± 2"	CL ± 3"	CL ± 4"
3/8	2	1 1/8	4	345	8	3	3	816	680	583	510	453

1. MINIMUM HOLE DEPTH IS TO BE VERIFIED BY THE INSPECTOR.
2. ROD LOCATIONS WITH SINGLE, RIGID BRACE CONNECTIONS REQUIRE ADDITIONAL SEISMIC LOAD CONSIDERATIONS BEFORE APPLYING THE ABOVE VALUES. REFER TO PROJECT SPECIFIC ISAT BRACING LEGEND. THIS LOAD INCREASE DOES NOT APPLY TO CABLE BRACES OR WHERE TWO RIGID BRACES CONNECTED TO A COMMON ROD ARE INSTALLED IN OPPOSING DIRECTIONS.

DUAL ANCHOR DEWALT SNAKE+ VERTICAL SUPPORT CONNECTION

REGISTERED PROFESSIONAL ENGINEER MARCIN WASAZNIK S-6612 STRUCTURAL STATE OF CALIFORNIA

ISAT
A Division of Tomarco Contractor Specialties
International Seismic Application Technology
14848 Northam Street, La Mirada, CA 90638
877-999-4728 (Toll Free) 714-523-0845 (fax)
www.isatsb.com

Rev.10
11/21/23

Page
G5.2SN

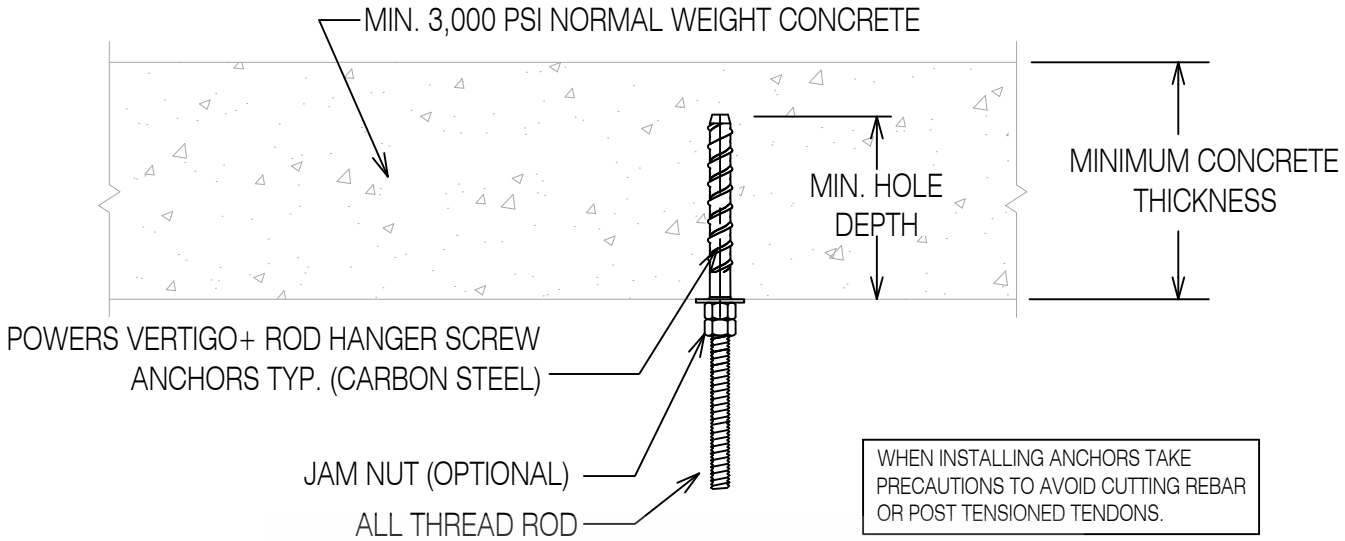

WHEN INSTALLING ANCHORS TAKE PRECAUTIONS TO AVOID CUTTING REBAR OR POST TENSIONED TENDONS.

REVIEWED FOR CODE COMPLIANCE
HCAi
BY: William Staehlin
DATE: 01-26-2024
CALIFORNIA BUILDING CODE REVIEW

Seismically Qualified for Anchorage In Cracked Concrete
Seismic Design Categories D, E and F
Powers Vertigo+ Screw Anchor, Minimum 3000 psi NWC
ICC Report No. ESR-2526 (Dated June 2016), Table 4, 5 and 6

Anchor Diameter Inch	Tension Value 3 ksi Conc Lbs.	Minimum Hole Depth Inch	Minimum Effective Embed. Inch	Minimum Concrete Thickness Inch	Max. Impact Wrench Torque Ft-Lbs.	Minimum Edge Distance Inch	Minimum Anchor Spacing Inch
1/4	451	2 1/2	1.425	3 1/2	185	4	6 3/4
3/8	451	2 1/2	1.425	3 1/2	185	2 3/4	6 3/4
1/2	451	2 1/2	1.425	3 1/2	185	5 1/4	6 3/4

1. MINIMUM EFFECTIVE EMBEDMENT IS AFTER THE ANCHOR HAS BEEN SET.
2. ROD LOCATIONS WITH SINGLE, RIGID BRACE CONNECTIONS REQUIRE ADDITIONAL SEISMIC LOAD CONSIDERATIONS BEFORE APPLYING THE ABOVE VALUES. REFER TO PROJECT SPECIFIC ISAT BRACING LEGEND. THIS LOAD INCREASE DOES NOT APPLY TO CABLE BRACES OR WHERE TWO RIGID BRACES CONNECTED TO A COMMON ROD ARE INSTALLED IN OPPOSING DIRECTIONS.
3. BASED ON INSTALLATION IN LOW FLUTE.
4. LOAD VALUES SHOWN ARE ALLOWABLE STRESS DESIGN (ASD). CAPACITIES DERIVED IN CONFORMANCE WITH ASCE 7-10, PIN 62 & ACI 318-11, Appendix D.

SINGLE POWERS VERTIGO+ ROD HANGER SCREW ANCHOR VERTICAL SUPPORT CONNECTION TO FORM POUR SLAB

ISAT
A Division of Tomarco Contractor Specialties
International Seismic Application Technology
14848 Northam Street, La Mirada, CA 90638
877-999-4728 (Toll Free) 714-523-0845 (fax)
www.isatsb.com

Rev. 7
06/18/18
Page
G5.1VRT3

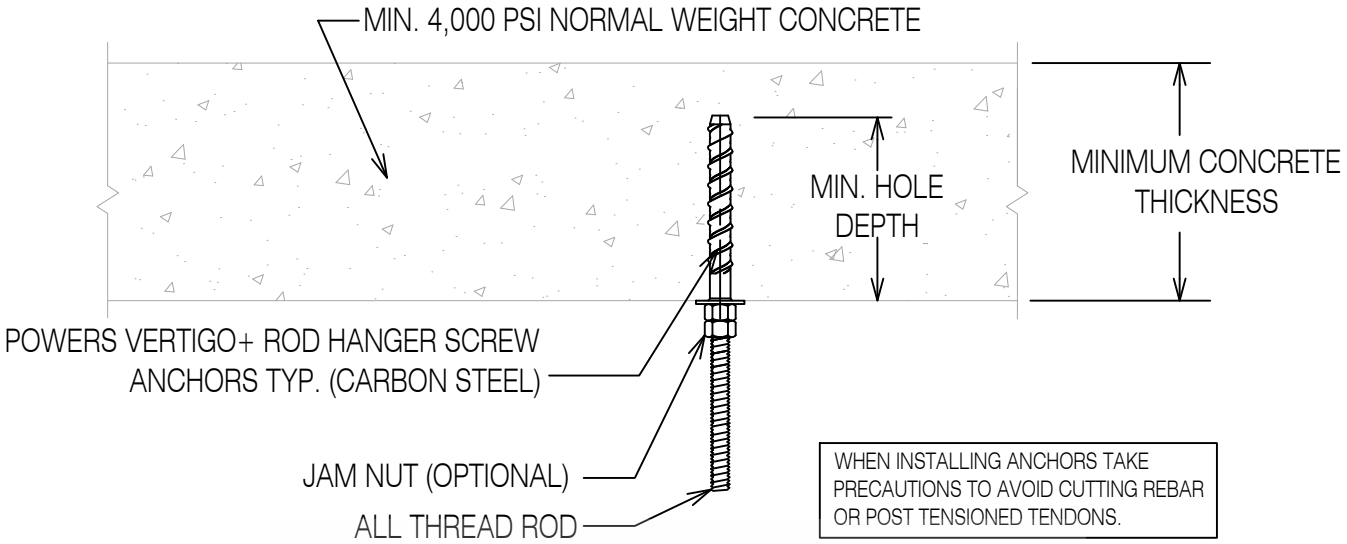

REVIEWED FOR CODE COMPLIANCE
HCAi
BY: William Staehlin
DATE: 01-26-2024
CALIFORNIA CODE AUTHORITY

Seismically Qualified for Anchorage In Cracked Concrete
Seismic Design Categories D, E and F
Powers Vertigo+ Screw Anchor, Minimum 4000 psi NWC
ICC Report No. ESR-2526 (Dated June 2016), Table 4, 5 and 6

Anchor Diameter Inch	Tension Value 4 ksi Conc Lbs.	Minimum Hole Depth Inch	Minimum Effective Embed. Inch	Minimum Concrete Thickness Inch	Max. Impact Wrench Torque Ft-Lbs.	Minimum Edge Distance Inch	Minimum Anchor Spacing Inch
1/4	521	2 1/2	1.425	3 1/2	185	4	6 3/4
3/8	521	2 1/2	1.425	3 1/2	185	2 3/4	6 3/4
1/2	521	2 1/2	1.425	3 1/2	185	5 1/4	6 3/4

1. MINIMUM EFFECTIVE EMBEDMENT IS AFTER THE ANCHOR HAS BEEN SET.
2. ROD LOCATIONS WITH SINGLE, RIGID BRACE CONNECTIONS REQUIRE ADDITIONAL SEISMIC LOAD CONSIDERATIONS BEFORE APPLYING THE ABOVE VALUES. REFER TO PROJECT SPECIFIC ISAT BRACING LEGEND. THIS LOAD INCREASE DOES NOT APPLY TO CABLE BRACES OR WHERE TWO RIGID BRACES CONNECTED TO A COMMON ROD ARE INSTALLED IN OPPOSING DIRECTIONS.
3. BASED ON INSTALLATION IN LOW FLUTE.
4. LOAD VALUES SHOWN ARE ALLOWABLE STRESS DESIGN (ASD). CAPACITIES DERIVED IN CONFORMANCE WITH ASCE 7-10, PIN 62 & ACI 318-11, Appendix D.

SINGLE POWERS VERTIGO+ ROD HANGER SCREW ANCHOR VERTICAL SUPPORT CONNECTION TO FORM POUR SLAB

REGISTERED PROFESSIONAL ENGINEER MARCIN WASAZNIK S 6612 STRUCTURAL STATE OF CALIFORNIA

ISAT
A Division of Tomarco Contractor Specialties
International Seismic Application Technology
14848 Northam Street, La Mirada, CA 90638
877-999-4728 (Toll Free) 714-523-0845 (fax)
www.isatsb.com

Rev. 7
06/18/18
Page
G5.1VRT4

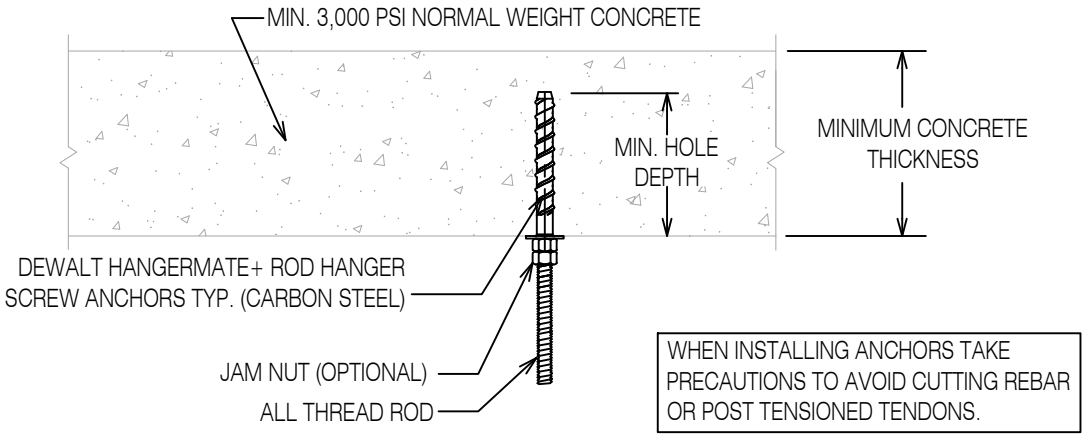

REVIEWED FOR CODE COMPLIANCE
HCAi
OPM-0403
BY: William Staehlin
DATE: 01-26-2024
CALIFORNIA BUILDING CODE, 2022

Dewalt Hangermate+ Screw Anchor, Minimum 3000 psi NWC
Seismically Qualified for Anchorage In Cracked Concrete
Seismic Design Categories D, E and F
ICC Report No. ESR-3889 (Dated November 2022), Table 1B, 4

Anchor Diameter Inch	Internal Thread Diameter Inch	Design Tension Value[2, 3] Lbs.	Minimum Hole Depth Inch	Minimum Effective Embed.[1] Inch	Minimum Concrete Thickness Inch	Max. Impact Wrench Torque Ft-Lbs.	Maximum Installation Torque Ft-Lbs.	Minimum Edge Distance Inch	Minimum Anchor Spacing Inch
1/4	1/4	144	2	1.20	3 1/4	150	19	4	3.60
3/8	3/8	150	2	1.20	3 1/4	150	19	2 3/4	3.60
3/8	1/2	487	2 7/8	1.94	4	150	25	5 1/4	5.82

1. MINIMUM EFFECTIVE EMBEDMENT IS AFTER THE ANCHOR HAS BEEN SET.
2. ROD LOCATIONS WITH SINGLE, RIGID BRACE CONNECTIONS REQUIRE ADDITIONAL SEISMIC LOAD CONSIDERATIONS BEFORE APPLYING THE ABOVE VALUES. REFER TO PROJECT SPECIFIC ISAT BRACING LEGEND. THIS LOAD INCREASE DOES NOT APPLY TO CABLE BRACES OR WHERE TWO RIGID BRACES CONNECTED TO A COMMON ROD ARE INSTALLED IN OPPOSING DIRECTIONS.
3. LOAD VALUES SHOWN ARE ALLOWABLE STRESS DESIGN (ASD). CAPACITIES DERIVED IN CONFORMANCE WITH ASCE 7-16 & ACI 318.

SINGLE DEWALT HANGERMATE+ ROD HANGER SCREW ANCHOR VERTICAL SUPPORT CONNECTION TO FORM POUR SLAB

REGISTERED PROFESSIONAL ENGINEER
MARCIN WASAZNIK
S 6612
STRUCTURAL
STATE OF CALIFORNIA

ISAT
A Division of Tomarco Contractor Specialties
International Seismic Application Technology
14848 Northam Street, La Mirada, CA 90638
877-999-4728 (Toll Free) 714-523-0845 (fax)
www.isatsb.com

Rev. 2
11/21/23
Page
G5.1HMT3

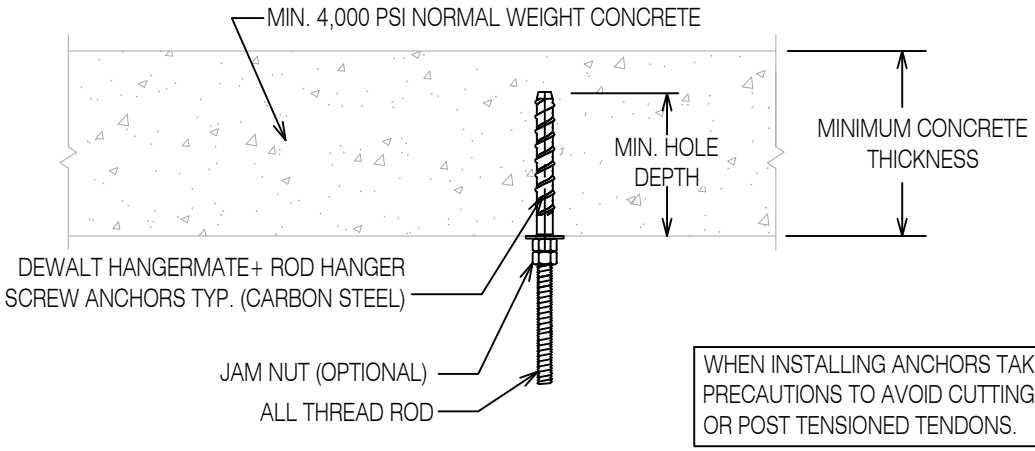

WHEN INSTALLING ANCHORS TAKE PRECAUTIONS TO AVOID CUTTING REBAR OR POST TENSIONED TENDONS.

REVIEWED FOR CODE COMPLIANCE
HCAi
OPM-0403
BY: William Staehlin
DATE: 01-26-2024
CALIFORNIA BUILDING CODE, 2022

Dewalt Hangermate+ Screw Anchor, Minimum 4000 psi NWC
Seismically Qualified for Anchorage In Cracked Concrete
Seismic Design Categories D, E and F
ICC Report No. ESR-3889 (Dated November 2022), Table 1B, 4

Anchor Diameter Inch	Internal Thread Diameter Inch	Design Tension Value[2, 3] Lbs.	Minimum Hole Depth Inch	Minimum Effective Embed.[1] Inch	Minimum Concrete Thickness Inch	Max. Impact Wrench Torque Ft-Lbs.	Maximum Installation Torque Ft-Lbs.	Minimum Edge Distance Inch	Minimum Anchor Spacing Inch
1/4	1/4	157	2	1.20	3 1/4	150	19	4	3.60
3/8	3/8	173	2	1.20	3 1/4	150	19	2 3/4	3.60
3/8	1/2	562	2 7/8	1.94	4	150	25	5 1/4	5.82

1. MINIMUM EFFECTIVE EMBEDMENT IS AFTER THE ANCHOR HAS BEEN SET.
2. ROD LOCATIONS WITH SINGLE, RIGID BRACE CONNECTIONS REQUIRE ADDITIONAL SEISMIC LOAD CONSIDERATIONS BEFORE APPLYING THE ABOVE VALUES. REFER TO PROJECT SPECIFIC ISAT BRACING LEGEND. THIS LOAD INCREASE DOES NOT APPLY TO CABLE BRACES OR WHERE TWO RIGID BRACES CONNECTED TO A COMMON ROD ARE INSTALLED IN OPPOSING DIRECTIONS.
3. LOAD VALUES SHOWN ARE ALLOWABLE STRESS DESIGN (ASD). CAPACITIES DERIVED IN CONFORMANCE WITH ASCE 7-16 & ACI 318.

SINGLE DEWALT HANGERMATE+ ROD HANGER SCREW ANCHOR VERTICAL SUPPORT CONNECTION TO FORM POUR SLAB

REGISTERED PROFESSIONAL ENGINEER
MARCIN WASAZNIK
S 6612
STRUCTURAL
STATE OF CALIFORNIA

ISAT
A Division of Tomarco Contractor Specialties
International Seismic Application Technology
14848 Northam Street, La Mirada, CA 90638
877-999-4728 (Toll Free) 714-523-0845 (fax)
www.isatsb.com

Rev. 2
11/21/23

Page
G5.1HMT4

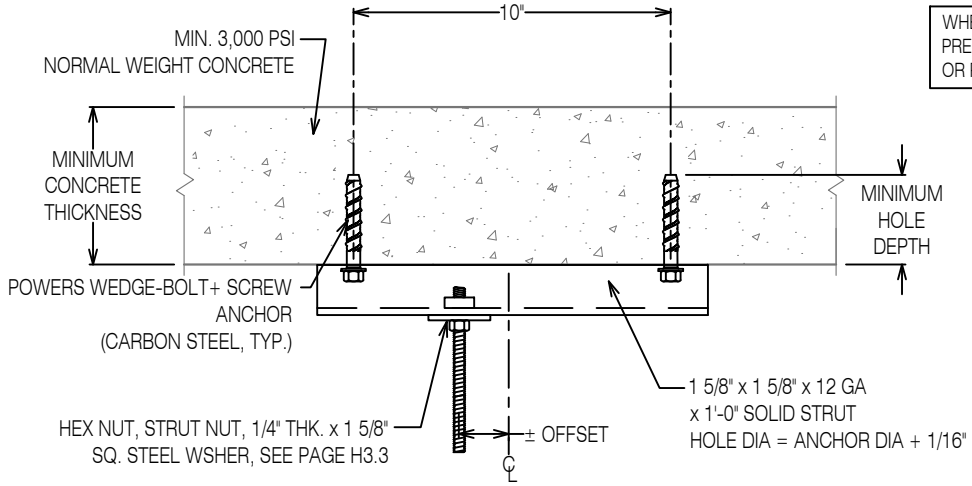

WHEN INSTALLING ANCHORS TAKE PRECAUTIONS TO AVOID CUTTING REBAR OR POST TENSIONED TENDONS.

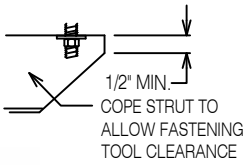

DETAIL B

Seismically Qualified For Anchorage In Cracked Concrete
Seismic Design Categories D, E and F
Powers Wedge-Bolt+ Screw Anchor, Minimum 3000 psi NWC
ICC Report No. ESR-2526 (Dated June 2018), Table 1, 2 and 3

Anchor Diameter Inch	Two Anchor Connection Tension Design Value Lbs. [2, 4, 5] Vertical Support Rod Max. Offset From C.L. CL ± 0"	CL ± 1"	CL ± 2"	CL ± 3"	CL ± 4"	Minimum Hole Depth Inch	Minimum Effective Embed.[1] Inch	Minimum Concrete Thickness Inch	Max. Impact Wrench Torque Ft-Lbs.	Minimum Edge Distance Inch	Minimum Anchor Spacing Inch
3/8	903	752	645	564	501	2 1/4	1.43	3 1/2	245	4.00	6.75
1/2	1,123	936	802	702	624	2 3/4	1.65	4	300	2.75	6.75
1/2	1,996	1,747	1,497	1,310	1,165	4	2.50	6	300	5.25	7.50
5/8 [3]	1,996	2,079	2,376	2,230	1,983	5	3.10	7	350	5.82	9.30

1. MINIMUM EFFECTIVE EMBEDMENT IS AFTER THE ANCHOR HAS BEEN SET.
2. CONNECTION DESIGN VALUE MAY BE LIMITED BY ROD STRENGTH, PAGE H1, OR STRUT NUT PULL OUT STRENGTH, PAGE H3.3.
3. USE DETAIL B.
4. ROD LOCATIONS WITH SINGLE, RIGID BRACE CONNECTIONS REQUIRE ADDITIONAL SEISMIC LOAD CONSIDERATIONS BEFORE APPLYING THE ABOVE VALUES. REFER TO PROJECT SPECIFIC ISAT BRACING LEGEND. THIS LOAD INCREASE DOES NOT APPLY TO CABLE BRACES OR WHERE TWO RIGID BRACES CONNECTED TO A COMMON ROD ARE INSTALLED IN OPPOSING DIRECTIONS.
5. LOAD VALUES SHOWN ARE ALLOWABLE STRESS DESIGN (ASD). CAPACITIES DERIVED IN CONFORMANCE WITH ASCE 7-10, PIN 62 & ACI 318-11, Appendix D.

DUAL ANCHOR POWERS WEDGE-BOLT+ SCREW ANCHOR VERTICAL SUPPORT CONNECTION TO FORM POUR SLAB

REVIEWED FOR CODE COMPLIANCE
OPM-0403
BY: William Staehlin
DATE: 01-26-2024
OF LA COUNTY CODE, 2020

REGISTERED PROFESSIONAL ENGINEER
MARCIN WASAZNIK
S 6612
STRUCTURAL
STATE OF CALIFORNIA

ISAT
A Division of Tomarco Contractor Specialties

International Seismic Application Technology
14848 Northam Street, La Mirada, CA 90638
877-999-4728 (Toll Free) 714-523-0845 (fax)
www.isatsb.com

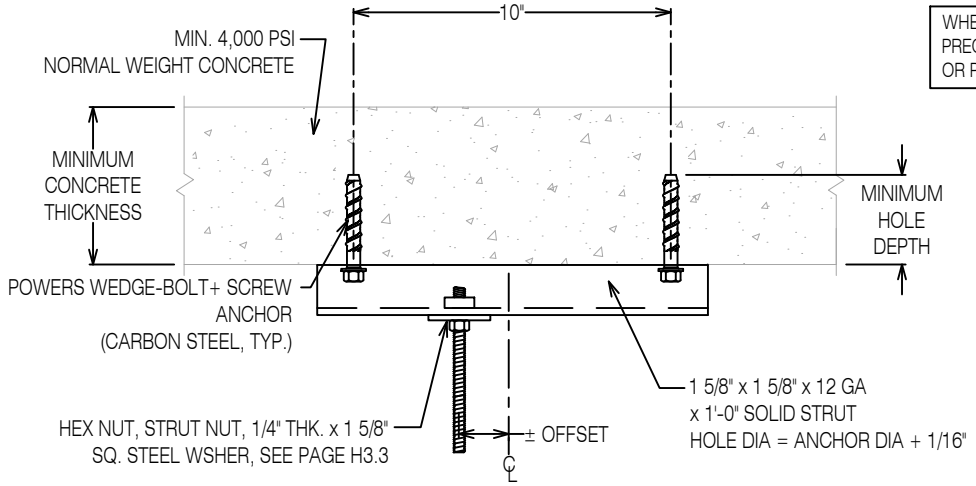

WHEN INSTALLING ANCHORS TAKE PRECAUTIONS TO AVOID CUTTING REBAR OR POST TENSIONED TENDONS.

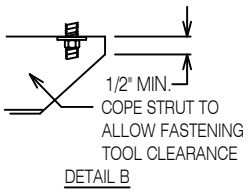

Seismically Qualified For Anchorage In Cracked Concrete
Seismic Design Categories D, E and F
Powers Wedge-Bolt+ Screw Anchor, Minimum 4000 psi NWC
ICC Report No. ESR-2526 (Dated June 2018), Table 1, 2 and 3

Anchor Diameter	Two Anchor Connection Tension Design Value Lbs. [2, 4, 5] Vertical Support Rod Max. Offset From C.L.					Minimum Hole Depth	Minimum Effective Embed.[1]	Minimum Concrete Thickness	Max. Impact Wrench Torque	Minimum Edge Distance	Minimum Anchor Spacing
Inch	CL ± 0"	CL ± 1"	CL ± 2"	CL ± 3"	CL ± 4"	Inch	Inch	Inch	Ft-Lbs.	Inch	Inch
3/8	1,042	868	744	651	579	2 1/4	1.43	3 1/2	245	4.00	6.75
1/2	1,297	1,081	926	810	720	2 3/4	1.65	4	300	2.75	6.75
1/2	1,996	2,017	1,729	1,513	1,345	4	2.50	6	300	5.25	7.50
5/8 [3]	1,996	2,079	2,376	2,575	2,289	5	3.10	7	350	5.82	9.30

1. MINIMUM EFFECTIVE EMBEDMENT IS AFTER THE ANCHOR HAS BEEN SET.
2. CONNECTION DESIGN VALUE MAY BE LIMITED BY ROD STRENGTH, PAGE H1, OR STRUT NUT PULL OUT STRENGTH, PAGE H3.3.
3. USE DETAIL B.
4. ROD LOCATIONS WITH SINGLE, RIGID BRACE CONNECTIONS REQUIRE ADDITIONAL SEISMIC LOAD CONSIDERATIONS BEFORE APPLYING THE ABOVE VALUES. REFER TO PROJECT SPECIFIC ISAT BRACING LEGEND. THIS LOAD INCREASE DOES NOT APPLY TO CABLE BRACES OR WHERE TWO RIGID BRACES CONNECTED TO A COMMON ROD ARE INSTALLED IN OPPOSING DIRECTIONS.
5. LOAD VALUES SHOWN ARE ALLOWABLE STRESS DESIGN (ASD). CAPACITIES DERIVED IN CONFORMANCE WITH ASCE 7-10, PIN 62 & ACI 318-11, Appendix D.

REVIEWED FOR CODE COMPLIANCE
OPM-0403
BY: William Staehlin
DATE: 01-26-2024
ICC-ES ESR-1260 IBC, IRC, UBC, CBC, 2020

DUAL ANCHOR POWERS WEDGE-BOLT+ SCREW ANCHOR VERTICAL SUPPORT CONNECTION TO FORM POUR SLAB

REGISTERED PROFESSIONAL ENGINEER
MARCIN WASAZNIK
S 6612
STRUCTURAL
STATE OF CALIFORNIA

ISAT
A Division of Tomarco Contractor Specialties

International Seismic Application Technology
14848 Northam Street, La Mirada, CA 90638
877-999-4728 (Toll Free) 714-523-0845 (fax)
www.isatsb.com

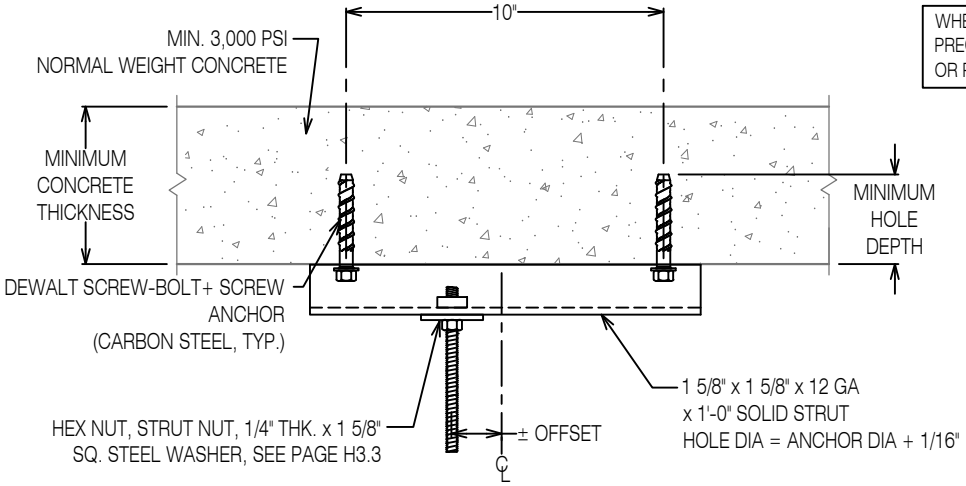

WHEN INSTALLING ANCHORS TAKE PRECAUTIONS TO AVOID CUTTING REBAR OR POST TENSIONED TENDONS.

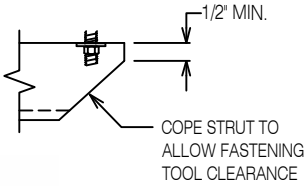

DETAIL B

REVIEWED FOR CODE COMPLIANCE
HCAi
OPM-0403
BY: William Staehlin
DATE: 01-26-2024
CALIFORNIA BUILDING CODE, 2022

Dewalt Screw-Bolt+ Screw Anchor, Minimum 3000 psi NWC
Seismically Qualified For Anchorage In Cracked Concrete
Seismic Design Categories D, E and F
ICC Report No. ESR-3889 (Dated November 2022), Table 1A, 2, 3A, 3B

Anchor Diameter	Two Anchor Connection					Minimum Hole Depth	Minimum Effective Embed.[1]	Minimum Concrete Thickness	Max. Impact Wrench Torque	Minimum Edge Distance	Minimum Anchor Spacing
	Tension Design Value Lbs.[2, 3, 4, 5] Vertical Support Rod Max. Offset From C.L.										
(in)	CL ± 0"	CL ± 1"	CL ± 2"	CL ± 3"	CL ± 4"	(in)	(in)	(in)	(Ft-Lbs.)	(in)	(in)
1/4	938	782	670	587	521	2 7/8	1.94	4	150	3.00	6.75
3/8	749	624	535	468	416	2 3/8	1.33	3 1/2	300	3.00	6.75
3/8	1,996	1,746	1,497	1,310	1,164	3 5/8	2.39	5	300	3.00	7.17
1/2	1,996	2,079	2,376	2,440	2,172	4 5/8	3.23	6 3/4	300	5.25	9.69
5/8[3]	1,996	2,079	2,002	1,752	1,557	5 3/8	3.73	7	700	6.00	11.19

1. MINIMUM EFFECTIVE EMBEDMENT IS AFTER THE ANCHOR HAS BEEN SET.
2. CONNECTION DESIGN VALUE MAY BE LIMITED BY ROD STRENGTH, PAGE H1, OR STRUT NUT PULL OUT STRENGTH, PAGE H3.3
3. USE DETAIL B.
4. ROD LOCATION WITH SINGLE, RIGID BRACE CONNECTIONS REQUIRE ADDITIONAL SEISMIC LOAD CONSIDERATIONS BEFORE APPLYING THE ABOVE VALUES. REFER TO THE PROJECT SPECIFIC ISAT BRACING LEGEND, OR C-SERIES PAGES. THIS LOAD INCREASE DOES NOT APPLY TO CABLE BRACES OR WHERE TWO RIGID BRACES CONNECTED TO A COMMON ROD ARE INSTALLED IN OPPOSING DIRECTIONS.
5. LOAD VALUES SHOWN ARE ALLOWABLE STRESS DESIGN (ASD). CAPACITIES DERIVED IN CONFORMANCE WITH ASCE 7-16 AND ACI 318.

DUAL ANCHOR DEWALT SCREW-BOLT+ SCREW ANCHOR VERTICAL SUPPORT CONNECTION TO FORM POUR SLAB

REGISTERED PROFESSIONAL ENGINEER
MARCIN WASAZNIK
S 6612
STRUCTURAL
STATE OF CALIFORNIA

ISAT
A Division of Tomarco Contractor Specialties

International Seismic Application Technology
14848 Northam Street, La Mirada, CA 90638
877-999-4728 (Toll Free) 714-523-0845 (fax)
www.isatsb.com

Rev. 2
11/21/23

Page
G5.2DSB3

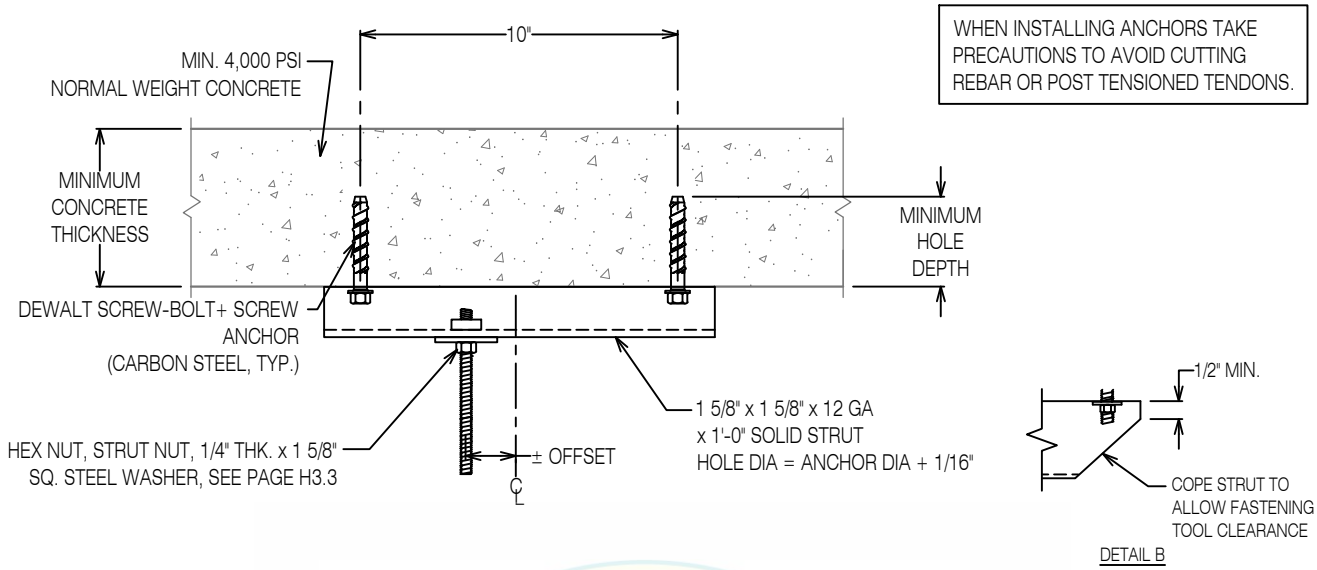

WHEN INSTALLING ANCHORS TAKE PRECAUTIONS TO AVOID CUTTING REBAR OR POST TENSIONED TENDONS.

Dewalt Screw-Bolt+ Screw Anchor, Minimum 4000 psi NWC
Seismically Qualified For Anchorage In Cracked Concrete
Seismic Design Categories D, E and F
ICC Report No. ESR-3889 (Dated November 2022), Table 1A, 2, 3A, 3B

Anchor Diameter	Two Anchor Connection Tension Design Value Lbs. [2, 3, 4, 5] Vertical Support Rod Max. Offset From C.L.					Minimum Hole Depth	Minimum Effective Embed.[1]	Minimum Concrete Thickness	Max. Impact Wrench Torque	Minimum Edge Distance	Minimum Anchor Spacing
(in)	CL ± 0"	CL ± 1"	CL ± 2"	CL ± 3"	CL ± 4"	(in)	(in)	(in)	(Ft-Lbs.)	(in)	(in)
1/4	1,023	853	731	639	568	2 7/8	1.94	4	150	3.00	6.75
3/8	864	720	617	540	480	2 3/8	1.33	3 1/2	300	3.00	6.75
3/8	1,996	2,017	1,729	1,512	1,344	3 5/8	2.39	5	300	3.00	7.17
1/2	1,996	2,079	2,376	2,440	2,440	4 5/8	3.23	6 3/4	300	5.25	9.69
5/8[3]	1,996	2,079	2,312	2,023	1,798	5 3/8	3.73	7	700	6.00	11.19

1. MINIMUM EFFECTIVE EMBEDMENT IS AFTER THE ANCHOR HAS BEEN SET.
2. CONNECTION DESIGN VALUE MAY BE LIMITED BY ROD STRENGTH, PAGE H1, OR STRUT NUT PULL OUT STRENGTH, PAGE H3.3
3. USE DETAIL B.
4. ROD LOCATION WITH SINGLE, RIGID BRACE CONNECTIONS REQUIRE ADDITIONAL SEISMIC LOAD CONSIDERATIONS BEFORE APPLYING THE ABOVE VALUES. REFER TO THE PROJECT SPECIFIC ISAT BRACING LEGEND, OR C-SERIES PAGES. THIS LOAD INCREASE DOES NOT APPLY TO CABLE BRACES OR WHERE TWO RIGID BRACES CONNECTED TO A COMMON ROD ARE INSTALLED IN OPPOSING DIRECTIONS.
5. LOAD VALUES SHOWN ARE ALLOWABLE STRESS DESIGN (ASD). CAPACITIES DERIVED IN CONFORMANCE WITH ASCE 7-16 AND ACI 318.

REVIEWED FOR CODE COMPLIANCE
OPM-0403
BY: William Staehlin
DATE: 01-26-2024
CALIFORNIA BUILDING CODE 2022

DUAL ANCHOR DEWALT SCREW-BOLT+ SCREW ANCHOR VERTICAL SUPPORT CONNECTION TO FORM POUR SLAB

REGISTERED PROFESSIONAL ENGINEER MARCIN WASAZNIK S-6612 STRUCTURAL STATE OF CALIFORNIA

ISAT
A Division of Tomarco Contractor Specialties
International Seismic Application Technology
14848 Northam Street, La Mirada, CA 90638
877-999-4728 (Toll Free) 714-523-0845 (fax)
www.isatsb.com

Rev. 2
11/21/23
Page
G5.2DSB4

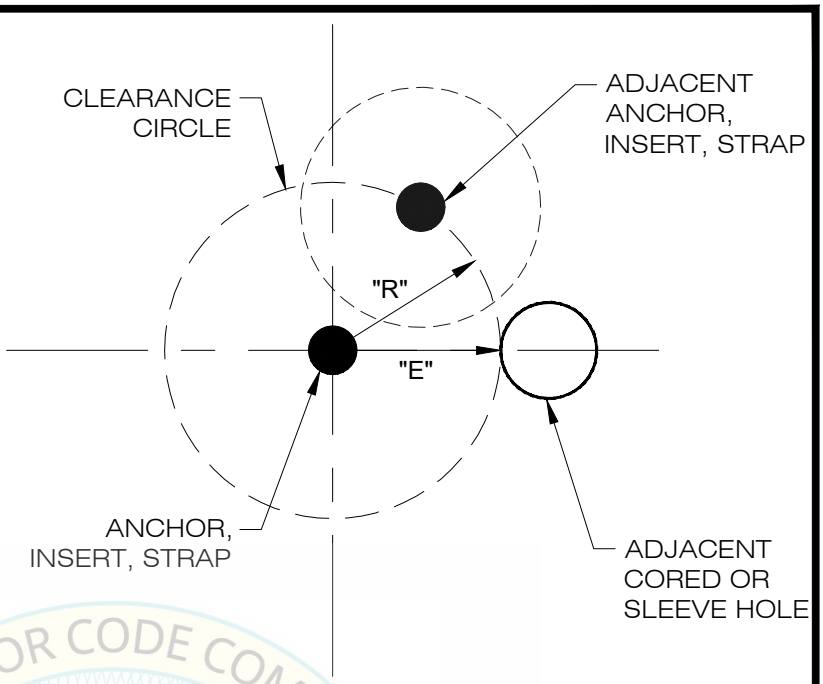

REVIEWED FOR CODE COMPLIANCE
HCAi
OPM-0403
BY: William Staehlin
DATE: 01-26-2024
CALIFORNIA BUILDING CODE 2022

PUSH ROD "PRSDI" MULTI-THREADED CONCRETE DECK INSERT, ESR 3599

PUSH ROD SDI INSERT	INSERT LOCATION	Clearance Circle Radius ("R") (in)	Clearance Edge Distance ("E") (in)	Capacity ASD[1][2] (lbs)	Reference OPM Detail
PRSDI3812	Upper Flute	6	6	1152	G6.1PR
PRSDI3812	Lower Flute	6	6	728	G6.1PR

1. Refer to ESR and Reference OPM detail for additional information
2. Combined demand of multiple inserts shall not exceed the capacity of a single insert

ISAT BLUE BANGER "SDI" MULTI-THREADED CONCRETE DECK INSERT, ESR 3599

BLUE BANGER HANGER SDI INSERT	INSERT LOCATION	Clearance Circle Radius ("R") (in)	Clearance Edge Distance ("E") (in)	Capacity ASD[1][2] (lbs)	Reference OPM Detail
SDI143812 SDI381258 SDI5834	Upper Flute	6	6	1498	G6.1B
SDI143812 SDI381258 SDI5834	Lower Flute	6	6	802	G6.1B
SDI143812 SDI381258 SDI5834	Upper Flute	6	6	2270	G6.2B
		5	6	2014	

1. Refer to ESR and Reference OPM detail for additional information
2. Combined demand of multiple inserts shall not exceed the capacity of a single insert

HILTI KWIK BOLT TZ2 CONCRETE EXPANSION ANCHOR, ESR 4266

Anchor Diameter & Embedment	Clearance Circle Radius ("R") (in)	Clearance Edge Distance ("E") (in)	Capacity ASD (lbs) [1]	Reference OPM Detail
3/8" Diameter 2" hef Embedment	6 3/4	4 1/2	871	G6.1TZ23
1/2" Diameter 2" hef Embedment	6 3/4	4 1/2	811	G6.1TZ23
1/2" Diameter 3 1/4" hef Embedment	9 3/4	7 1/2	1268	G6.1TZ23
5/8" Diameter 4" hef Embedment	12	8 3/4	1669 [2]	G6.1TZ23

1. Refer to ESR and Reference OPM detail for additional information
2. Capacity is less than KB-TZ of same size and embedment.

GENERAL NOTES

1. Anchor requiring larger clearance radius governs.
2. Multiple clearance circles may overlap each other. However, no more than one anchor shall be installed in the same circle.
3. Abandoned anchors that are cut-off flush with the deck shall be spaced no less than (3 x their drilled hole diameter) from the new anchors.
4. Grout filled unused anchor holes shall be spaced no less than (1.5 x their drilled hole diameter) from the new anchors.
5. Consult with the project S.E.O.R. for concerns not addressed above.

METAL PAN DECK ANCHOR SPACING

REGISTERED PROFESSIONAL ENGINEER MARCIN WASAZNIK S-6612 STRUCTURAL STATE OF CALIFORNIA

ISAT
A Division of Tomarco Contractor Specialties
International Seismic Application Technology
14848 Northam Street, La Mirada, CA 90638
877-999-4728 (Toll Free) 714-523-0845 (fax)
www.isatsb.com

Rev. 0
6/7/2023
Page
G6.0

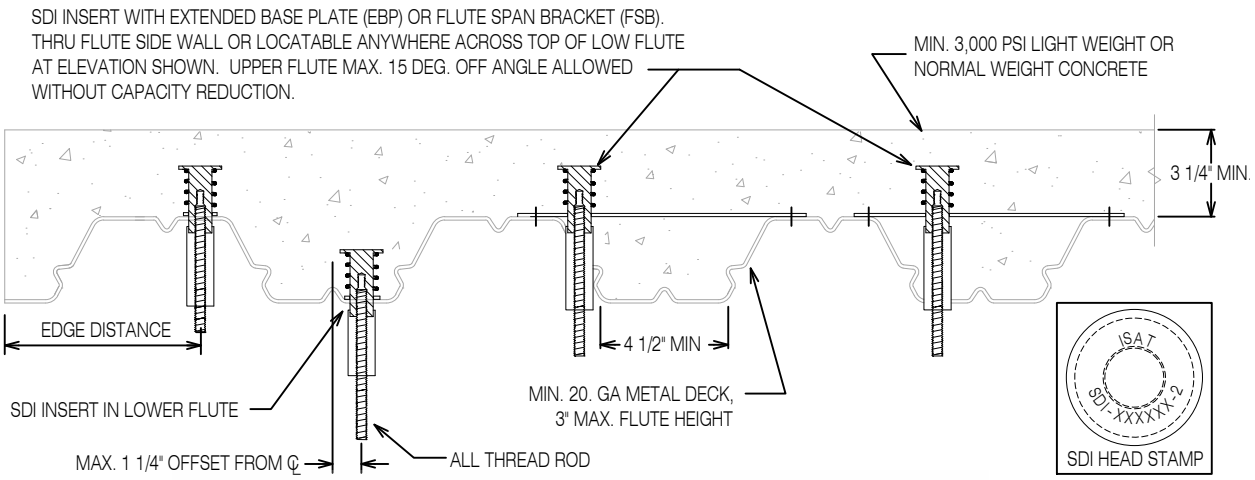

Blue Banger Hanger Steel Deck Insert (SDI) And SDI With Extended Base Plate (EBP)
Seismically Qualified for Anchorage In Cracked Concrete
Seismic Design Categories D, E and F
Form Pour Slab, Minimum 3,000 psi NWC
ICC Report No. ESR-3599 (November, 2017), Table 2

Deck Insert Part No.	All Thread Rod Dia. See Page H1 or H1.1 For Design Values Inch	Maximum Tension Value (Lbs) At Minimum Concrete Strength				Nominal Insert Height Inch	Minimum Edge Distance Inch	Minimum Spacing Inch
		3,000 psi		4,000 psi				
		Lower Flute	Upper Flute	Lower Flute	Upper Flute			
SDI143812	1/4, 3/8, 1/2	802	1,498	926	1,729	2	6	6
SDI381258	3/8, 1/2, 5/8							
SDI5834	5/8, 3/4							
	7/8, 1 w/ Rod Coupler							

1. LOAD VALUES SHOWN ARE ALLOWABLE STRESS DESIGN (ASD). CAPACITIES DERIVED IN CONFORMANCE WITH ASCE 7-10, PIN 62 & ACI 318-11, Appendix D.
2. SPACING MEASURED ALONG LENGTH OF FLUTE. EDGE DISTANCE PERPENDICULAR TO DIRECTION SHOWN (END DISTANCE) SHALL BE 6 INCHES.
3. MAXIMUM ALL THREAD ROD AT THE INSERT IS 3/4". USE REDUCING ROD COUPLING FOR LARGER VERTICAL SUPPORT ROD DIAMETERS
4. ROD LOCATIONS WITH SINGLE, RIGID BRACE CONNECTIONS REQUIRE ADDITIONAL SEISMIC LOAD CONSIDERATIONS BEFORE APPLYING THE ABOVE VALUES. REFER TO PROJECT SPECIFIC ISAT BRACING LEGEND. THIS LOAD INCREASE DOES NOT APPLY TO CABLE BRACES OR WHERE TWO RIGID BRACES CONNECTED TO A COMMON ROD ARE INSTALLED IN OPPOSING DIRECTIONS.
5. FOR BOTTOM FLUTE WIDTHS < 4-1/2", CONTACT ISAT TECHNICAL SERVICE.

SINGLE BLUE BANGER HANGER SDI INSERT VERTICAL SUPPORT CONNECTION

REGISTERED PROFESSIONAL ENGINEER MARCIN WASAZNIK S 6612 STRUCTURAL STATE OF CALIFORNIA

ISAT
A Division of Tomarco Contractor Specialties
International Seismic Application Technology
14848 Northam Street, La Mirada, CA 90638
877-999-4728 (Toll Free) 714-523-0845 (fax)
www.isatsb.com

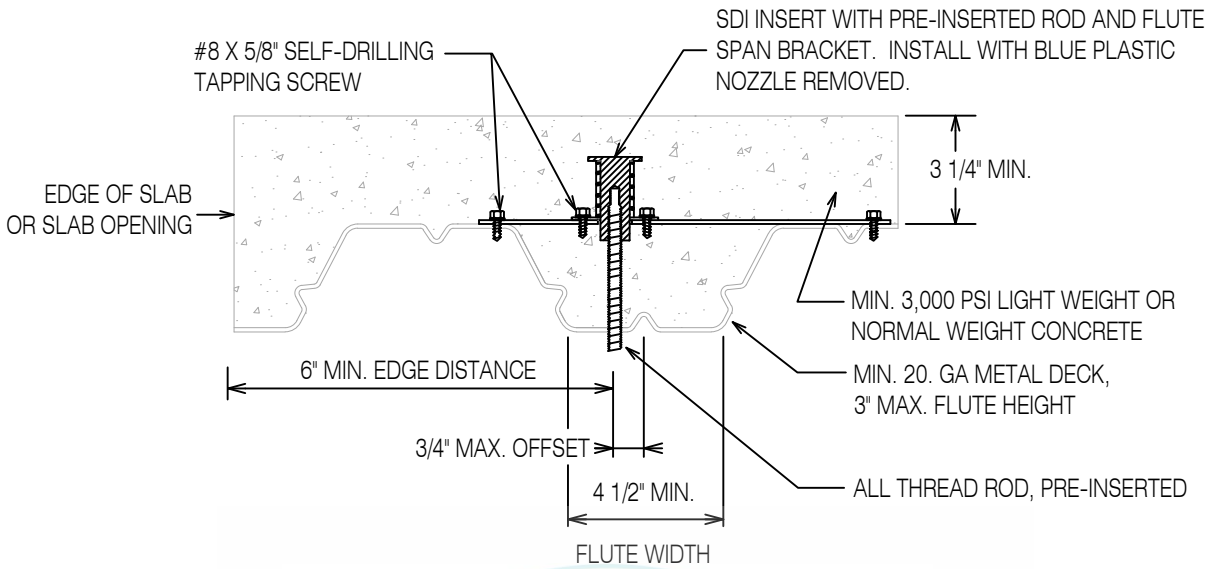

REVIEWED FOR CODE COMPLIANCE
HCAi
OPM-0403
BY: William Staehlin
DATE: 01-26-2024
CALIFORNIA BUILDING CODE 2022

Blue Banger Hanger Steel Deck Insert (SDI) And SDI With Flute Span Bracket (FSB)
Seismically Qualified for Anchorage In Cracked Concrete
Seismic Design Categories D, E and F

Deck Insert Part No.	All Thread Rod Dia. See Page H1 or H1.1 For Design Values Inch	12" Spacing Lbs.	10" Spacing Lbs.	9" Spacing Lbs.	8" Spacing Lbs.	7" Spacing Lbs.	6" Spacing Lbs.	5" Spacing Lbs.
SDI143812	1/4, 3/8, 1/2	3,812	3,298	3,041	2,784	2,527	2,270	2,014
SDI381258	3/8, 1/2, 5/8							
SDI5834	5/8, 3/4							
	7/8, 1 w/ Rod Coupler							

1. VALUES SHOWN ARE EXCLUSIVE OF THREADED ROD CAPACITY.
2. SPACING MEASURED ALONG LENGTH OF FLUTE. EDGE DISTANCE PERPENDICULAR TO DIRECTION SHOWN (END DISTANCE) SHALL BE 6 INCHES.
3. MAXIMUM ATR AT THE INSERT IS 3/4". USE A REDUCING ROD COUPLING FOR LARGER VERTICAL SUPPORT ROD DIAMETERS.
4. ROD LOCATIONS WITH SINGLE, RIGID BRACE CONNECTIONS REQUIRE ADDITIONAL SEISMIC LOAD CONSIDERATIONS BEFORE APPLYING THE ABOVE VALUES. REFER TO PROJECT SPECIFIC ISAT BRACING LEGEND. THIS LOAD INCREASE DOES NOT APPLY TO CABLE BRACES OR WHERE TWO RIGID BRACES CONNECTED TO A COMMON ROD ARE INSTALLED IN OPPOSING DIRECTIONS.
5. LOAD VALUES SHOWN ARE ALLOWABLE STRESS DESIGN (ASD). CAPACITIES DERIVED IN CONFORMANCE WITH ASCE 7-10, PIN 62 & ACI 318-11, Appendix D.

SINGLE BLUE BANGER HANGER SDI INSERT WITH EXTENDED BASE PLATE (EBP) VERTICAL SUPPORT CONNECTION

ISAT
A Division of Tomarco Contractor Specialties
International Seismic Application Technology
14848 Northam Street, La Mirada, CA 90638
877-999-4728 (Toll Free) 714-523-0845 (fax)
www.isatsb.com

Rev. 7
06/18/18
Page
G6.2B

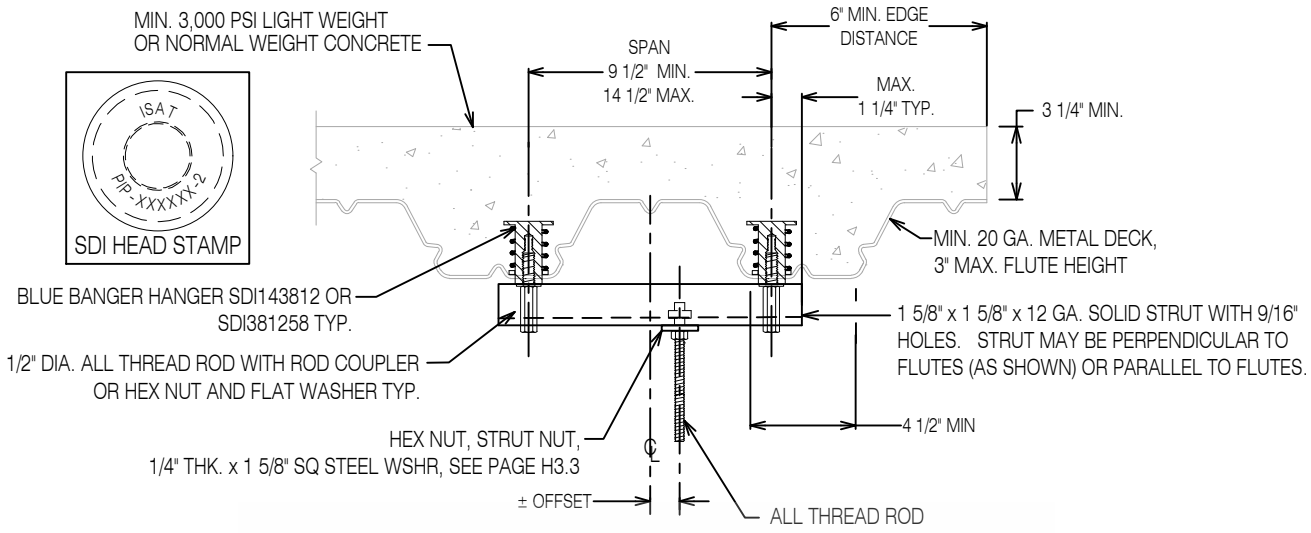

REVIEWED FOR CODE COMPLIANCE
HCAi
OPM-0403
DATE: 01-26-2024
CALIFORNIA BUILDING CODE, 2022

Blue Banger Hanger Steel Deck Insert (SDI)
Seismically Qualified for Anchorage In Cracked Concrete
Seismic Design Categories D, E and F
ICC Report No. ESR-3599 (November, 2017), Table 2

Deck Insert Part No.	Nominal Insert Height Inch	Minimum Edge Distance Inch	Two Anchor Connection Tension Design Value Lbs. [1, 2] Vertical Support Rod Max. Offset From C. L.				
			C.L. ± 0"	C.L. ± 1"	C.L. ± 2"	C.L. ± 3"	C.L. ± 4"
SDI143812	2	6	1,342	1,108	944	822	728
SDI381258							

1. MINIMUM 3,000 PSI LWC
2. VALUES SHOWN ARE ALLOWABLE STRESS DESIGN (ASD) AND ARE EXCLUSIVE OF THREADED ROD CAPACITY.
3. MAINTAIN 6" MINIMUM SPACING BETWEEN PAIRS OF INSERTS
4. ROD LOCATIONS WITH SINGLE, RIGID BRACE CONNECTIONS REQUIRE ADDITIONAL SEISMIC LOAD CONSIDERATIONS BEFORE APPLYING THE ABOVE VALUES. REFER TO PROJECT SPECIFIC ISAT BRACING LEGEND. THIS LOAD INCREASE DOES NOT APPLY TO CABLE BRACES OR WHERE TWO RIGID BRACES CONNECTED TO A COMMON ROD ARE INSTALLED IN OPPOSING DIRECTIONS.
5. LOAD VALUES SHOWN ARE ALLOWABLE STRESS DESIGN (ASD). CAPACITIES DERIVED IN CONFORMANCE WITH ASCE 7-10, PIN 62 & ACI 318-11, Appendix D.

DUAL BLUE BANGER HANGER SDI INSERT VERTICAL SUPPORT CONNECTION

ISAT
A Division of Tomarco Contractor Specialties
International Seismic Application Technology
14848 Northam Street, La Mirada, CA 90638
877-999-4728 (Toll Free) 714-523-0845 (fax)
www.isatsb.com

Rev. 8
10/05/18

Page
G6.3B

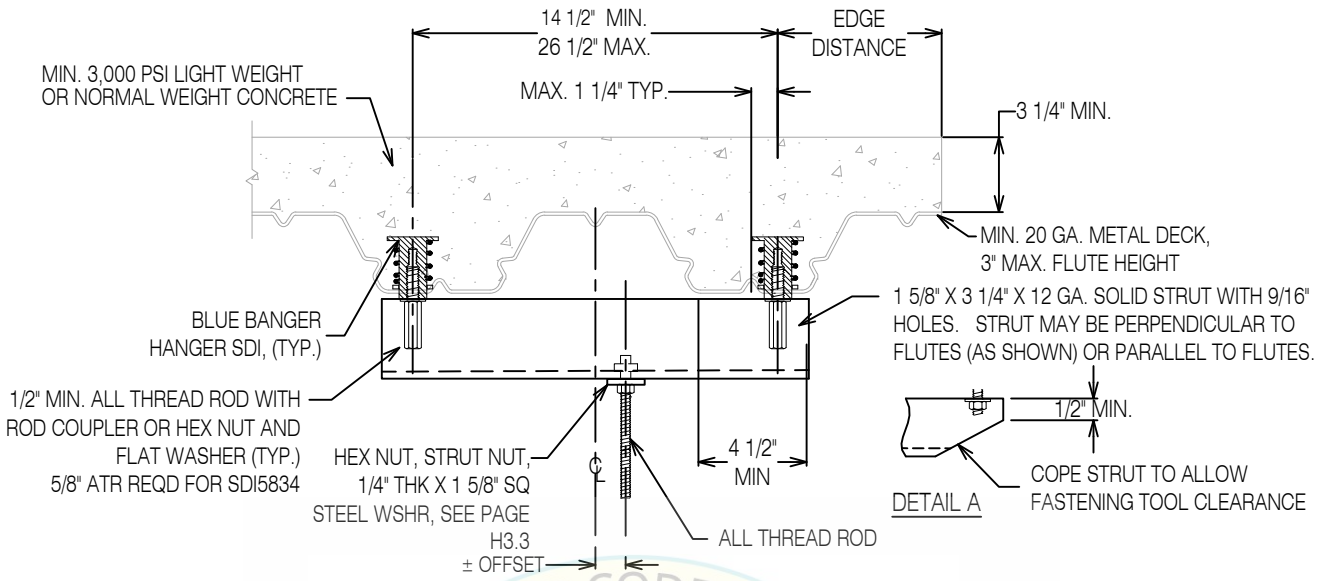

Blue Banger Hanger Steel Deck Insert (SDI)
Seismically Qualified for Anchorage In Cracked Concrete
Seismic Design Categories D, E and F
ICC Report No. ESR-3599 (November, 2017), Table 2

Deck Insert Part No. [4]	Minimum Edge Distance Inch	Two Anchor Connection Tension Design Value Lbs. [1, 2, 4] Vertical Support Rod Max. Offset From C. L.				
Insert Spacing = 26 1/2" [3]		**C.L. ± 0"**	**C.L. ± 2"**	**C.L. ± 4"**	**C.L. ± 6"**	**C.L. ± 8"**
SDI143812 SDI381258 [5] SDI5834 [5]	6	1,393	1,232	1,104	1000	914
Insert Spacing = 14 1/2" [3]		**C.L. ± 0"**	**C.L. ± 1"**	**C.L. ± 2"**	**C.L. ± 3"**	**C.L. ± 4"**
SDI143812 SDI381258 [5] SDI5834 [5]	6	1,603	1,409	1,257	1,134	1,033

1. MINIMUM 3,000 PSI LWC
2. VALUES SHOWN ARE ALLOWABLE STRESS DESIGN (ASD) AND ARE EXCLUSIVE OF THREADED ROD CAPACITY.
3. MAINTAIN 6" MINIMUM SPACING BETWEEN PAIRS OF INSERTS
4. ROD LOCATIONS WITH SINGLE, RIGID BRACE CONNECTIONS REQUIRE ADDITIONAL SEISMIC LOAD CONSIDERATIONS BEFORE APPLYING THE ABOVE VALUES. REFER TO PROJECT SPECIFIC ISAT BRACING LEGEND. THIS LOAD INCREASE DOES NOT APPLY TO CABLE BRACES OR WHERE TWO RIGID BRACES
5. USE DETAIL A.
6. LOAD VALUES SHOWN ARE ALLOWABLE STRESS DESIGN (ASD). CAPACITIES DERIVED IN CONFORMANCE WITH ASCE 7-10, PIN 62 & ACI 318-11, Appendix D.

DUAL BLUE BANGER HANGER SDI INSERT WITH DEEP STRUT VERTICAL SUPPORT CONNECTION

REGISTERED PROFESSIONAL ENGINEER MARCIN WASAZNIK S 6612 STRUCTURAL STATE OF CALIFORNIA

ISAT
A Division of Tomarco Contractor Specialties

International Seismic Application Technology
14848 Northam Street, La Mirada, CA 90638
877-999-4728 (Toll Free) 714-523-0845 (fax)
www.isatsb.com

Rev. 7
06/18/18

Page
G6.4B

APPROVED FOR CODE COMPLIANCE
ICAT
BY: William Staehlin
DATE: 01-26-2024
CALIFORNIA BUILDING CODE, 2022

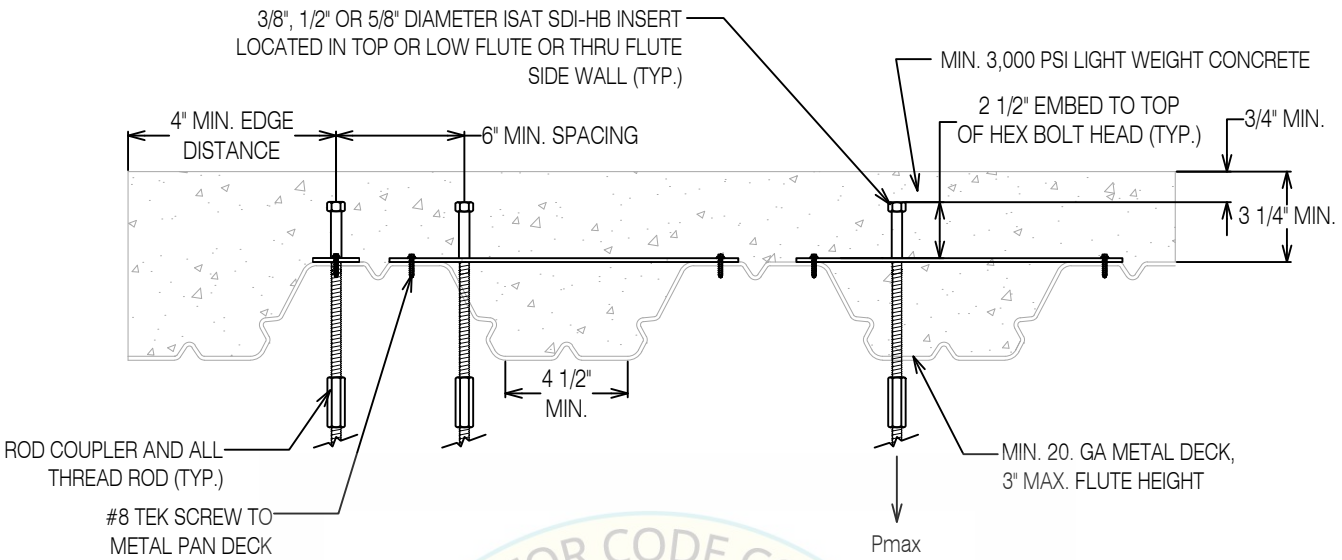

Seismically Qualified For Anchorage In Cracked Concrete
Seismic Design Categories D, E and F
ISAT SDI-HB, Minimum 3000 psi LWC

Anchor Diameter Inch	Max. Vert. Load Lbs.	Min. Anchor Embed. Inch
3/8	1542	2 1/2
1/2	1415	2 1/2
5/8	1353	2 1/2

REVIEWED FOR CODE COMPLIANCE
OPM-0403
BY William Staehlin
DATE 01/26/2024
CALIFORNIA BUILDING CODE 2022

1. ALLOWABLE LOADS ARE FOR ANCHORS INSTALLED IN 3000 PSI LIGHTWEIGHT CONCRETE.
2. CALIFORNIA BUILDING CODE STATES: "ALL BOLTS SHALL BE ACCURATELY AND SECURELY SET PRIOR TO PLACEMENT OF CONCRETE." FASTENER OR JAMB NUT MAY BE USED. TYPICAL FOR ALL APPLICATIONS.
3. MOUNTING HOLES ARE STANDARD. IF THE PLATE IS NOT MECHANICALLY SECURED TO THE DECK RIBS, A JAMB NUT IS REQUIRED TO PREVENT THE ANCHOR BOLT FROM LAYING OVER WHEN CONCRETE IS POURED.
4. STRUCTURAL ENGINEER OF RECORD SHALL VERIFY ADEQUACY OF THE BUILDING STRUCTURE FOR ACTUAL IMPOSED LOADS AS PROVIDED IN THE COMBINED TRADES POINT LOAD DRAWINGS.
5. MINIMUM SPACING BETWEEN INSERTS SHALL BE THE GREATER OF 3 TIMES THE EMBEDMENT DEPTH, OR 6".
6. LOAD VALUES SHOWN ARE ALLOWABLE STRESS DESIGN (ASD). CAPACITIES DERIVED IN CONFORMANCE WITH ASCE 7-10, PIN 62 & ACI 318-11, Appendix D.

SINGLE ISAT SDI-HB INSERT
VERTICAL SUPPORT CONNECTION

REGISTERED PROFESSIONAL ENGINEER
MARCIN WASAZNIK
S 6612
STRUCTURAL
STATE OF CALIFORNIA

ISAT
A Division of Tomarco Contractor Specialties
International Seismic Application Technology
14848 Northam Street, La Mirada, CA 90638
877-999-4728 (Toll Free) 714-523-0845 (fax)
www.isatsb.com

Rev. 7
06/18/18

Page
G6.1HB3

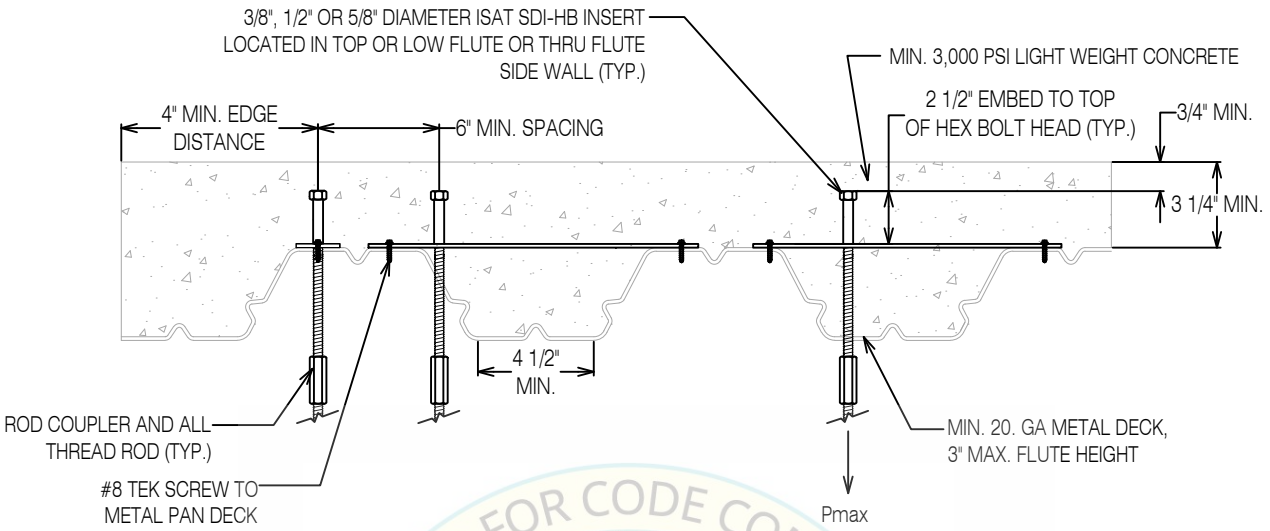

Seismically Qualified For Anchorage In Cracked Concrete
Seismic Design Categories D, E and F
ISAT SDI-HB, Minimum 4000 psi LWC

Anchor Diameter Inch	Max. Vert. Load Lbs.	Min. Anchor Embed. Inch
3/8	1781	2 1/2
1/2	1634	2 1/2
5/8	1563	2 1/2

REVIEWED FOR CODE COMPLIANCE
OPM-0403
BY William Staehlin
DATE 01/26/2024
CALIFORNIA BUILDING CODE 2022

1. ALLOWABLE LOADS ARE FOR ANCHORS INSTALLED IN 3000 PSI LIGHTWEIGHT CONCRETE.
2. CALIFORNIA BUILDING CODE STATES: "ALL BOLTS SHALL BE ACCURATELY AND SECURELY SET PRIOR TO PLACEMENT OF CONCRETE." FASTENER OR JAMB NUT MAY BE USED. TYPICAL FOR ALL APPLICATIONS.
3. MOUNTING HOLES ARE STANDARD. IF THE PLATE IS NOT MECHANICALLY SECURED TO THE DECK RIBS, A JAMB NUT IS REQUIRED TO PREVENT THE ANCHOR BOLT FROM LAYING OVER WHEN CONCRETE IS POURED.
4. STRUCTURAL ENGINEER OF RECORD SHALL VERIFY ADEQUACY OF THE BUILDING STRUCTURE FOR ACTUAL IMPOSED LOADS AS PROVIDED IN THE COMBINED TRADES POINT LOAD DRAWINGS.
5. MINIMUM SPACING BETWEEN INSERTS SHALL BE THE GREATER OF 3 TIMES THE EMBEDMENT DEPTH, OR 6".
6. LOAD VALUES SHOWN ARE ALLOWABLE STRESS DESIGN (ASD). CAPACITIES DERIVED IN CONFORMANCE WITH ASCE 7-10, PIN 62 & ACI 318-11, Appendix D.

SINGLE ISAT SDI-HB INSERT VERTICAL SUPPORT CONNECTION

REGISTERED PROFESSIONAL ENGINEER MARCIN WASAZNIK S 6612 STRUCTURAL STATE OF CALIFORNIA

ISAT
A Division of Tomarco Contractor Specialties
International Seismic Application Technology
14848 Northam Street, La Mirada, CA 90638
877-999-4728 (Toll Free) 714-523-0845 (fax)
www.isatsb.com

Rev. 7
06/18/18
Page
G6.1HB4

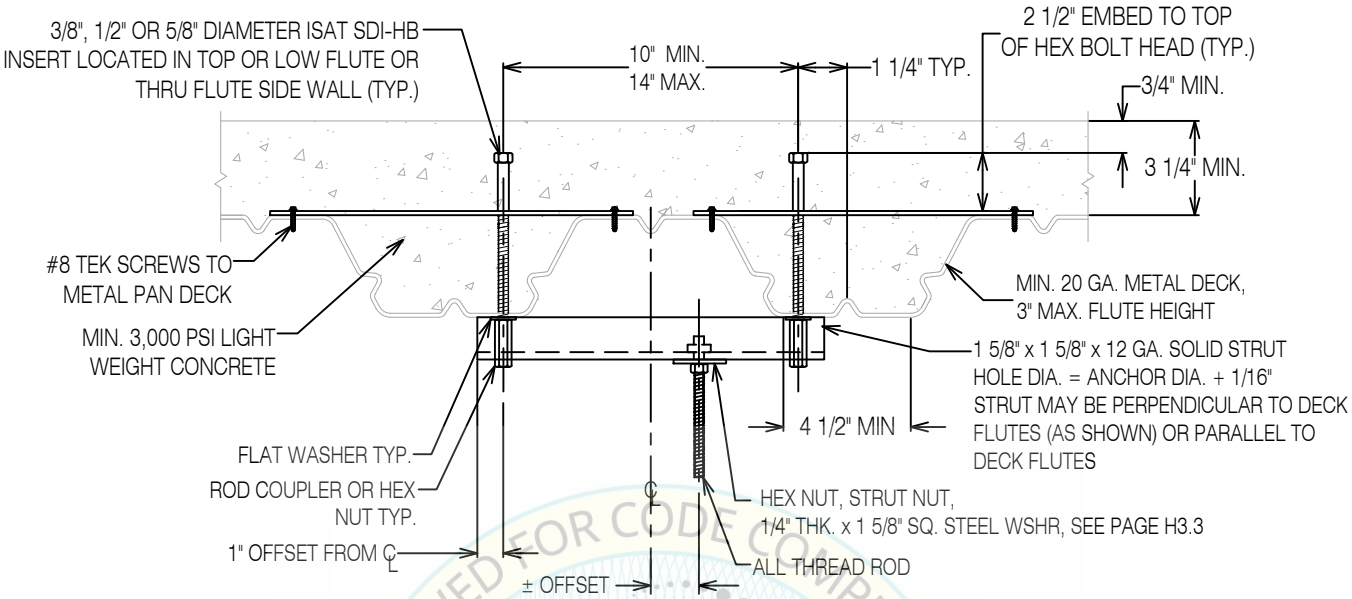

Seismically Qualified For Anchorage In Cracked Concrete
Seismic Design Categories D, E and F
ISAT SDI-HB, Minimum 3000 psi LWC

Anchor Diameter Inch	Min. Anchor Embed. Inch	Tension Design Value (Lbs.) Vertical Support Rod Maximum Offset from C.L.				
		C.L. ± 0"	C.L. ± 1"	C.L. ± 2"	C.L. ± 3"	C.L. ± 4"
3/8	2 1/2	1,426	1,455	1,552	1,747	1,618
1/2	2 1/2	1,426	1,455	1,552	1,718	1,527
5/8	2 1/2	1,426	1,455	1,552	1,666	1,481

1. ALLOWABLE LOADS ARE FOR ANCHORS INSTALLED IN 3000 PSI LIGHTWEIGHT CONCRETE.
2. CALIFORNIA BUILDING CODE STATES: "ALL BOLTS SHALL BE ACCURATELY AND SECURELY SET PRIOR TO PLACEMENT OF CONCRETE." FASTENER OR JAMB NUT MAY BE USED. TYPICAL FOR ALL APPLICATIONS.
3. MOUNTING HOLES ARE STANDARD. IF THE PLATE IS NOT MECHANICALLY SECURED TO THE DECK RIBS, A JAMB NUT IS REQUIRED TO PREVENT THE ANCHOR BOLT FROM LAYING OVER WHEN CONCRETE IS POURED.
4. STRUCTURAL ENGINEER OF RECORD SHALL VERIFY ADEQUACY OF THE BUILDING STRUCTURE FOR ACTUAL IMPOSED LOADS AS PROVIDED IN THE COMBINED TRADES POINT LOAD DRAWINGS.
5. MINIMUM SPACING BETWEEN INSERTS SHALL BE THE GREATER OF 3 TIMES THE EMBEDMENT DEPTH, OR 6".
6. LOAD VALUES SHOWN ARE ALLOWABLE STRESS DESIGN (ASD). CAPACITIES DERIVED IN CONFORMANCE WITH ASCE 7-10, PIN 62 & ACI 318-11, Appendix D.

DUAL ISAT SDI-HB INSERT
VERTICAL SUPPORT CONNECTION

REVIEWED FOR CODE COMPLIANCE
HCAi
OPM-0403
BY: William Staehlin
DATE: 01-26-2024
CALIFORNIA BUILDING CODE, 2022

REGISTERED PROFESSIONAL ENGINEER
MARCIN WASAZNIK
S 6612
STRUCTURAL
STATE OF CALIFORNIA

ISAT
A Division of Tomarco Contractor Specialties

International Seismic Application Technology
14848 Northam Street, La Mirada, CA 90638
877-999-4728 (Toll Free) 714-523-0845 (fax)
www.isatsb.com

Rev. 7
06/18/18

Page
G6.2HB

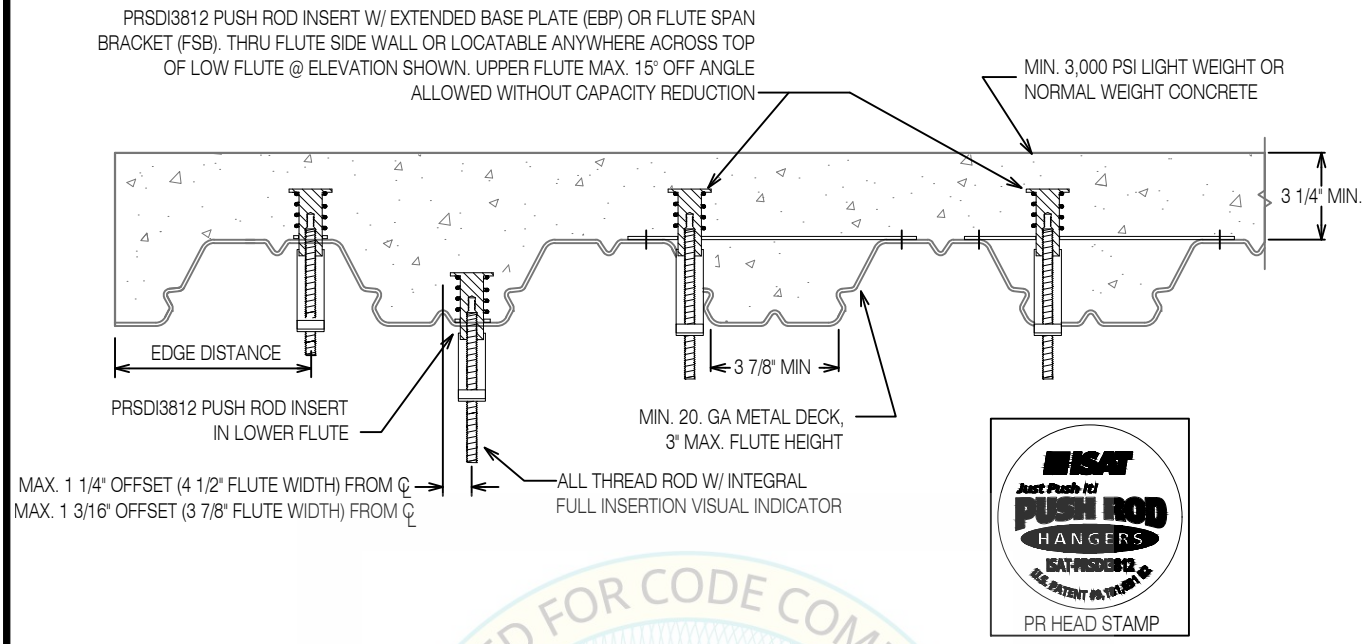

Push Rod Steel Deck (PRSDI) Insert And PRSDI With Extended Base Plate (EBP)
Seismically Qualified for Anchorage In Cracked Concrete
Seismic Design Categories D, E and F
ICC Report No. ESR-3599 (November 2017), Table 3A

Deck Insert Part No. [7]	All Thread Rod Dia. (ATR) Inch [5]	Maximum Tension Value (Lbs) At Minimum Concrete Strength [6]				Nominal Insert Height Inch	Minimum Edge Distance Inch	Minimum Spacing Inch
		3,000 psi		4,000 psi				
		Lower Flute	Upper Flute	Lower Flute	Upper Flute			
PRSDI3812	3/8	728	1,152	840	1,152	2	6	6
PRSDI3812	1/2	728	1,498	840	1,729			

1. LOAD VALUES SHOWN ARE ALLOWABLE STRESS DESIGN (ASD). CAPACITIES DERIVED IN CONFORMANCE WITH ASCE 7-10, PIN 62 & ACI 318-11, Appendix D.
2. SPACING MEASURED ALONG LENGTH OF FLUTE. EDGE DISTANCE PERPENDICULAR TO DIRECTION SHOWN (END DISTANCE) SHALL BE 6 INCHES.
3. MAXIMUM ALL THREAD ROD AT THE INSERT IS 1/2". USE REDUCING ROD COUPLING FOR LARGER VERTICAL SUPPORT ROD DIAMETERS
4. ROD LOCATIONS WITH SINGLE, RIGID BRACE CONNECTIONS REQUIRE ADDITIONAL SEISMIC LOAD CONSIDERATIONS BEFORE APPLYING THE ABOVE VALUES. REFER TO PROJECT SPECIFIC ISAT BRACING LEGEND. THIS LOAD INCREASE DOES NOT APPLY TO CABLE BRACES OR WHERE TWO RIGID BRACES CONNECTED TO A COMMON ROD ARE INSTALLED IN OPPOSING DIRECTIONS.
5. ISAT SUPPLIED ALL THREAD ROD REQUIRED WITH INTEGRAL "FULL INSERTION VISUAL INDICATOR".
6. ALL THREAD ROD CAPACITY INDEPENDENT OF INSERT VALUE. DESIGNER SHALL CHECK ATR CAPACITIES.
7. SEE PAGE F11.0

SINGLE PUSH ROD (PRSDI) INSERT VERTICAL SUPPORT CONNECTION

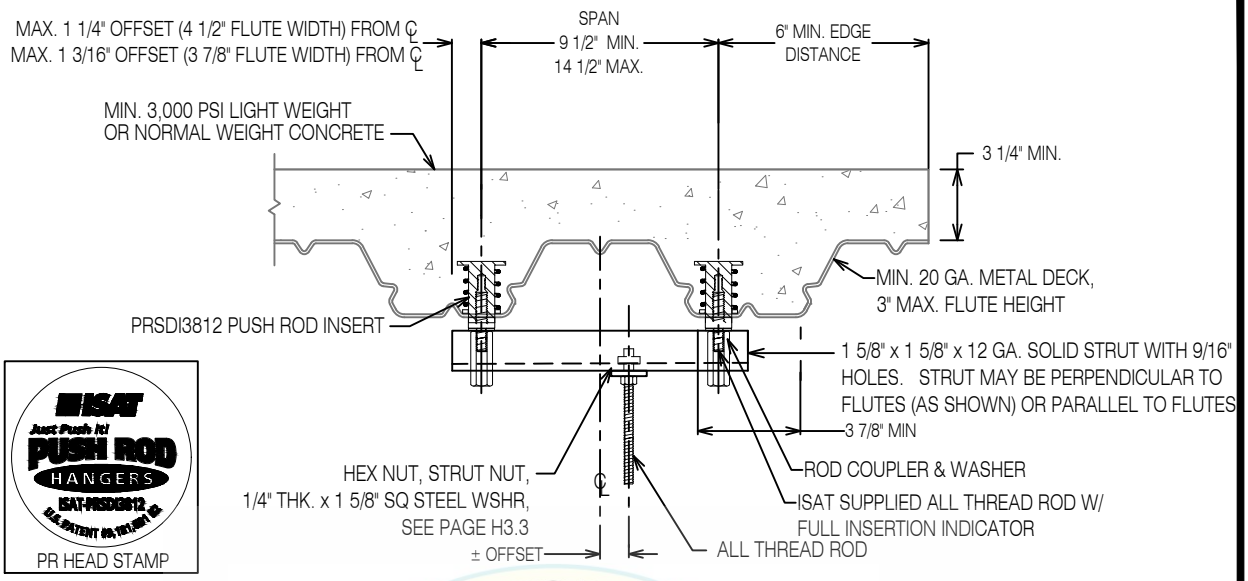

Push Rod Steel Deck (PRSDI) Insert
Seismically Qualified for Anchorage In Cracked Concrete
Seismic Design Categories D, E and F
ICC Report No. ESR-3599 (November 2017), Table 3A

Deck Insert Part No. [6]	All Thread Rod Dia. (ATR) Inch [5]	Nominal Insert Height Inch	Minimum Edge Distance Inch	Two Anchor Connection Tension Design Value Lbs. [1, 2] Vertical Support Rod Max. Offset From C. L.				
				C.L. ± 0"	C.L. ± 1"	C.L. ± 2"	C.L. ± 3"	C.L. ± 4"
PRSDI3812	3/8	2	6	1,095	905	771	671	594
PRSDI3812	1/2							

1. MINIMUM 3,000 PSI LWC
2. LOAD VALUES SHOWN ARE ALLOWABLE STRESS DESIGN (ASD). CAPACITIES DERIVED IN CONFORMANCE WITH ASCE 7-10, PIN 62 & ACI 318-11, Appendix D.
3. MAINTAIN 6" MINIMUM SPACING BETWEEN PAIRS OF INSERTS
4. ROD LOCATIONS WITH SINGLE, RIGID BRACE CONNECTIONS REQUIRE ADDITIONAL SEISMIC LOAD CONSIDERATIONS BEFORE APPLYING THE ABOVE VALUES. REFER TO PROJECT SPECIFIC ISAT BRACING LEGEND. THIS LOAD INCREASE DOES NOT APPLY TO CABLE BRACES OR WHERE TWO RIGID BRACES
5. ISAT SUPPLIED ALL THREAD ROD REQUIRED WITH INTEGRAL "FULL INSERTION VISUAL INDICATOR".
6. SEE PAGE F11.0

DUAL PUSH ROD (PRSDI) INSERT
VERTICAL SUPPORT CONNECTION

REVIEWED FOR CODE COMPLIANCE
HCAi
OPM-0403
By: William Staehlin
DATE: 01-26-2024
CALIFORNIA BUILDING CODE, 2022

REGISTERED PROFESSIONAL ENGINEER
MARCIN WASAZNIK
S 6612
STRUCTURAL
STATE OF CALIFORNIA

ISAT
A Division of Tomarco Contractor Specialties

International Seismic Application Technology
14848 Northam Street, La Mirada, CA 90638
877-999-4728 (Toll Free) 714-523-0845 (fax)
www.isatsb.com

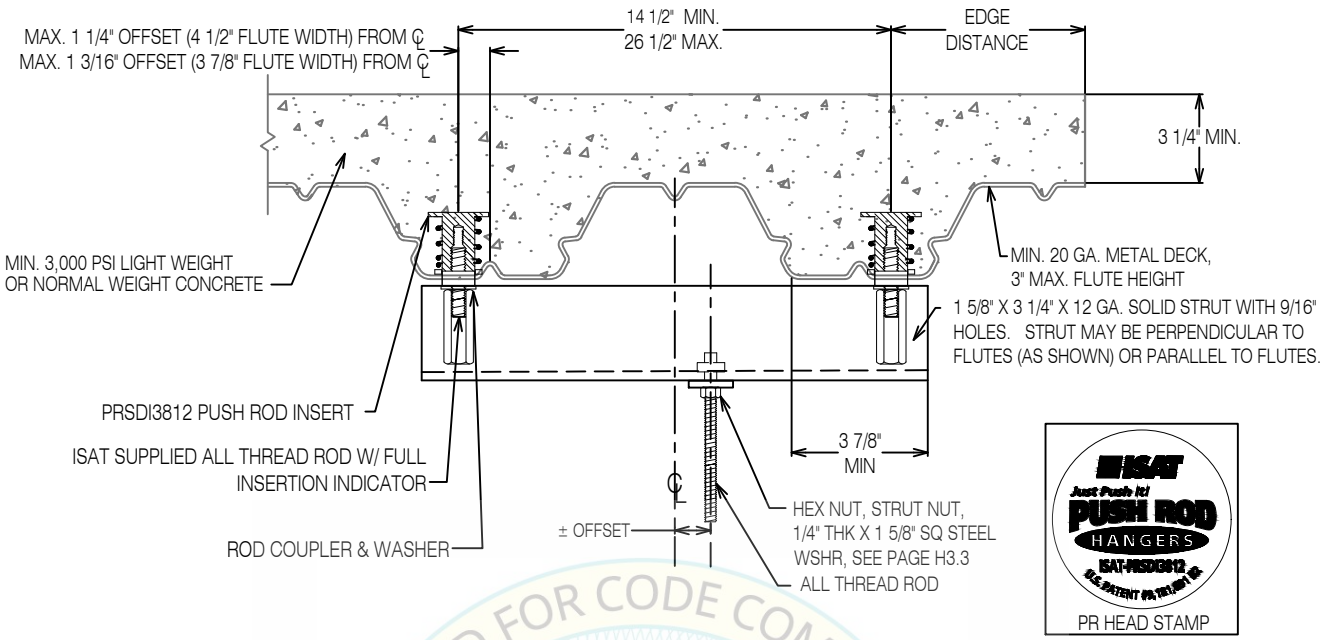

Push Rod Steel Deck (PRSDI) Insert
Seismically Qualified for Anchorage In Cracked Concrete
Seismic Design Categories D, E and F
ICC Report No. ESR-3599 (November 2017), Table 3A

Deck Insert Part No. 4 [6]	All Thread Rod Dia. (ATR) Inch [5]	Minimum Edge Distance Inch	Two Anchor Connection Tension Design Value Lbs. [1, 2, 4] Vertical Support Rod Max. Offset From C. L.				
Insert Spacing = 26 1/2" [3]			**C.L. ± 0"**	**C.L. ± 2"**	**C.L. ± 4"**	**C.L. ± 6"**	**C.L. ± 8"**
PRSDI3812	3/8	6	1,264	1,118	1,002	907	829
PRSDI3812	1/2						
Insert Spacing = 14 1/2" [3]			**C.L. ± 0"**	**C.L. ± 1"**	**C.L. ± 2"**	**C.L. ± 3"**	**C.L. ± 4"**
PRSDI3812	3/8	6	1,455	1,279	1,140	1,029	938
PRSDI3812	1/2						

1. MINIMUM 3,000 PSI LWC
2. LOAD VALUES SHOWN ARE ALLOWABLE STRESS DESIGN (ASD). CAPACITIES DERIVED IN CONFORMANCE WITH ASCE 7-10, PIN 62 & ACI 318-11, Appendix D.
3. MAINTAIN 6" MINIMUM SPACING BETWEEN PAIRS OF INSERTS
4. ROD LOCATIONS WITH SINGLE, RIGID BRACE CONNECTIONS REQUIRE ADDITIONAL SEISMIC LOAD CONSIDERATIONS BEFORE APPLYING THE ABOVE VALUES. REFER TO PROJECT SPECIFIC ISAT BRACING LEGEND. THIS LOAD INCREASE DOES NOT APPLY TO CABLE BRACES OR WHERE TWO RIGID BRACES
5. ISAT SUPPLIED ALL THREAD ROD REQUIRED WITH INTEGRAL "FULL INSERTION VISUAL INDICATOR".
6. SEE PAGE F11.0

DUAL PUSH ROD (PRSDI) INSERT WITH DEEP STRUT VERTICAL SUPPORT CONNECTION

REGISTERED PROFESSIONAL ENGINEER
MARCIN WASAZNIK
S 6612
STRUCTURAL
STATE OF CALIFORNIA

ISAT
A Division of Tomarco Contractor Specialties
International Seismic Application Technology
14848 Northam Street, La Mirada, CA 90638
877-999-4728 (Toll Free) 714-523-0845 (fax)
www.isatsb.com

REVIEWED FOR CODE COMPLIANCE
OPM-0403
BY: William Staehlin
DATE: 01-26-2024
CALIFORNIA BUILDING CODE 2022

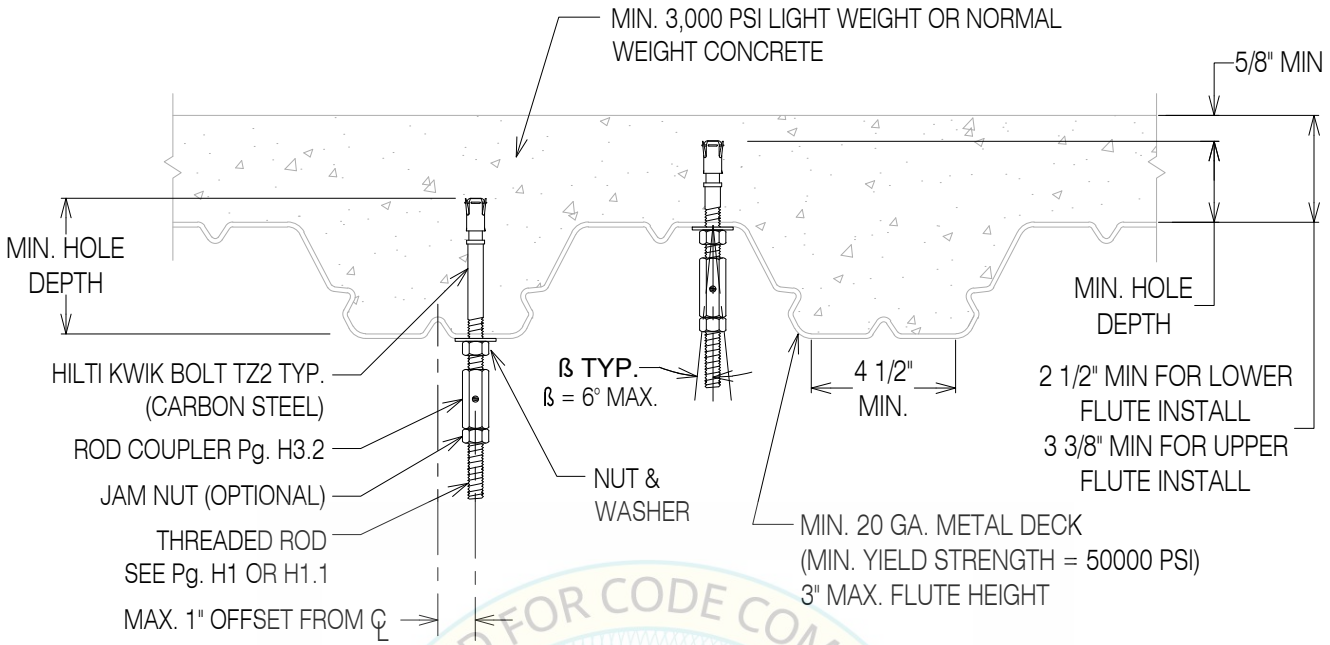

REVIEWED FOR CODE COMPLIANCE
HCAi
OPM-0403
BY: William Staehlin
DATE: 01/26/2024
CALIFORNIA BUILDING CODE 2022

Hilti Kwik Bolt TZ2 (Carbon Steel) Concrete Expansion Anchor, Minimum 3000 psi LWC
Seismically Qualified For Anchorage In Cracked Concrete
Seismic Design Categories D, E and F
ICC Report No. ESR-4266 (Dated May 2023), Table 8 and Fig. 5A

Anchor Diameter Inch	Design Tension 3 ksi Conc Lbs.	Minimum Hole Depth Inch	Minimum Effective Embed. Inch	Installation Torque Ft-Lbs.	Minimum Edge Distance Inch	Minimum Anchor Spacing Inch	Min. Concrete Thickness Above Top Flute (Inch)[3] Metal Deck Flute Height		
							1 1/2"	2"	3"
3/8	871	2 3/4	2	30	4 1/2	6 3/4	2 1/2	2 1/2	2 1/2
1/2	811	2 3/4	2	50	4 1/2	6 3/4	2 1/2	2 1/2	2 1/2
1/2	1,268	4 1/4	3 1/4	50	7 1/2	9 3/4	3 3/8	2 7/8	2 1/2
5/8	1,669	4 3/4	4	40	8 3/4	12	3 7/8	3 3/8	2 1/2

1. MINIMUM EFFECTIVE EMBEDMENT IS AFTER THE ANCHOR HAS BEEN SET.
2. ROD LOCATION WITH SINGLE, RIGID BRACE CONNECTIONS REQUIRE ADDITIONAL SEISMIC LOAD CONSIDERATIONS BEFORE APPLYING THE ABOVE VALUES. REFER TO THE PROJECT SPECIFIC ISAT BRACING LEGEND, OR C-SERIES PAGES. THIS LOAD INCREASE DOES NOT APPLY TO CABLE BRACES OR WHERE TWO RIGID BRACES CONNECTED TO A COMMON ROD ARE INSTALLED IN OPPOSING DIRECTIONS.
3. BASED ON INSTALLATION IN LOW FLUTE.
4. LOAD VALUES SHOWN ARE ALLOWABLE STRESS DESIGN (ASD). CAPACITIES DERIVED IN CONFORMANCE WITH ASCE 7-16 AND ACI 318.
5. DESIGN IS CONTROLLED BY SEISMIC FORCES. NON SEISMIC FORCES SUCH AS GRAVITY ARE OUTSIDE THE SCOPE OF THIS OPM.

SINGLE HILTI KWIK BOLT TZ2 ANCHOR TO METAL DECK W/CONC. VERTICAL SUPPORT CONNECTION

REGISTERED PROFESSIONAL ENGINEER MARCIN WASAZNIK S-6612 STRUCTURAL STATE OF CALIFORNIA

ISAT
A Division of Tomarco Contractor Specialties
International Seismic Application Technology
14848 Northam Street, La Mirada, CA 90638
877-999-4728 (Toll Free) 714-523-0845 (fax)
www.isatsb.com

Rev. 3
11/21/23
Page
G6.1TZ23

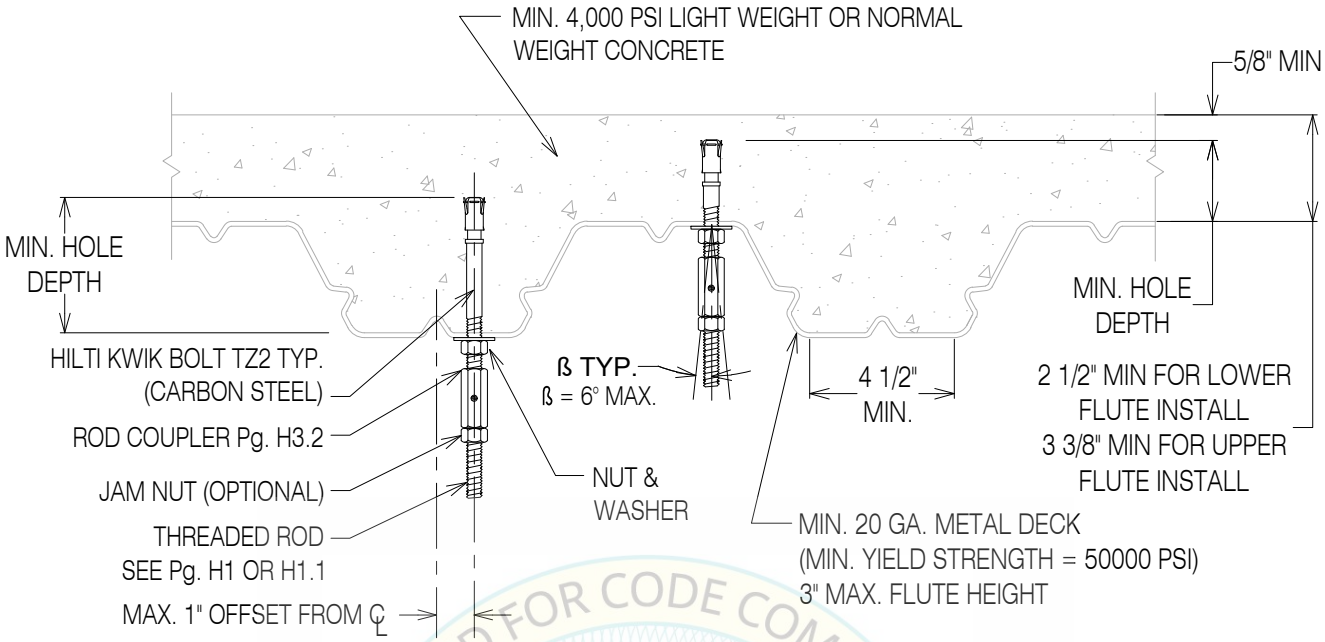

REVIEWED FOR CODE COMPLIANCE
HCAi
BY: William Staehlin
DATE: 01-26-2024
CALIFORNIA BUILDING CODE, 2022

Hilti Kwik Bolt TZ2 (Carbon Steel) Concrete Expansion Anchor, Minimum 4000 psi LWC
Seismically Qualified For Anchorage In Cracked Concrete
Seismic Design Categories D, E and F
ICC Report No. ESR-4266 (Dated May 2023), Table 8 and Fig. 5A

Anchor Diameter Inch	Design Tension 3 ksi Conc Lbs.	Minimum Hole Depth Inch	Minimum Effective Embed. Inch	Installation Torque Ft-Lbs.	Minimum Edge Distance Inch	Minimum Anchor Spacing Inch	Min. Concrete Thickness Above Top Flute (Inch)[3] Metal Deck Flute Height 1 1/2"	2"	3"
3/8	995	2 3/4	2	30	4 1/2	6 3/4	2 1/2	2 1/2	2 1/2
1/2	936	2 3/4	2	50	4 1/2	6 3/4	2 1/2	2 1/2	2 1/2
1/2	1,423	4 1/4	3 1/4	50	7 1/2	9 3/4	3 3/8	2 7/8	2 1/2
5/8	1,927	4 3/4	4	40	8 3/4	12	3 7/8	3 3/8	2 1/2

1. MINIMUM EFFECTIVE EMBEDMENT IS AFTER THE ANCHOR HAS BEEN SET.
2. ROD LOCATION WITH SINGLE, RIGID BRACE CONNECTIONS REQUIRE ADDITIONAL SEISMIC LOAD CONSIDERATIONS BEFORE APPLYING THE ABOVE VALUES. REFER TO THE PROJECT SPECIFIC ISAT BRACING LEGEND, OR C-SERIES PAGES. THIS LOAD INCREASE DOES NOT APPLY TO CABLE BRACES OR WHERE TWO RIGID BRACES CONNECTED TO A COMMON ROD ARE INSTALLED IN OPPOSING DIRECTIONS.
3. BASED ON INSTALLATION IN LOW FLUTE.
4. LOAD VALUES SHOWN ARE ALLOWABLE STRESS DESIGN (ASD). CAPACITIES DERIVED IN CONFORMANCE WITH ASCE 7-16 AND ACI 318.
5. DESIGN IS CONTROLLED BY SEISMIC FORCES. NON SEISMIC FORCES SUCH AS GRAVITY ARE OUTSIDE THE SCOPE OF THIS OPM.

SINGLE HILTI KWIK BOLT TZ2 ANCHOR TO METAL DECK W/CONC. VERTICAL SUPPORT CONNECTION

REGISTERED PROFESSIONAL ENGINEER MARCIN WASAZNIK S-6612 STRUCTURAL STATE OF CALIFORNIA

ISAT
A Division of Tomarco Contractor Specialties
International Seismic Application Technology
14848 Northam Street, La Mirada, CA 90638
877-999-4728 (Toll Free) 714-523-0845 (fax)
www.isatsb.com

Rev. 3
11/21/23
Page
G6.1TZ24

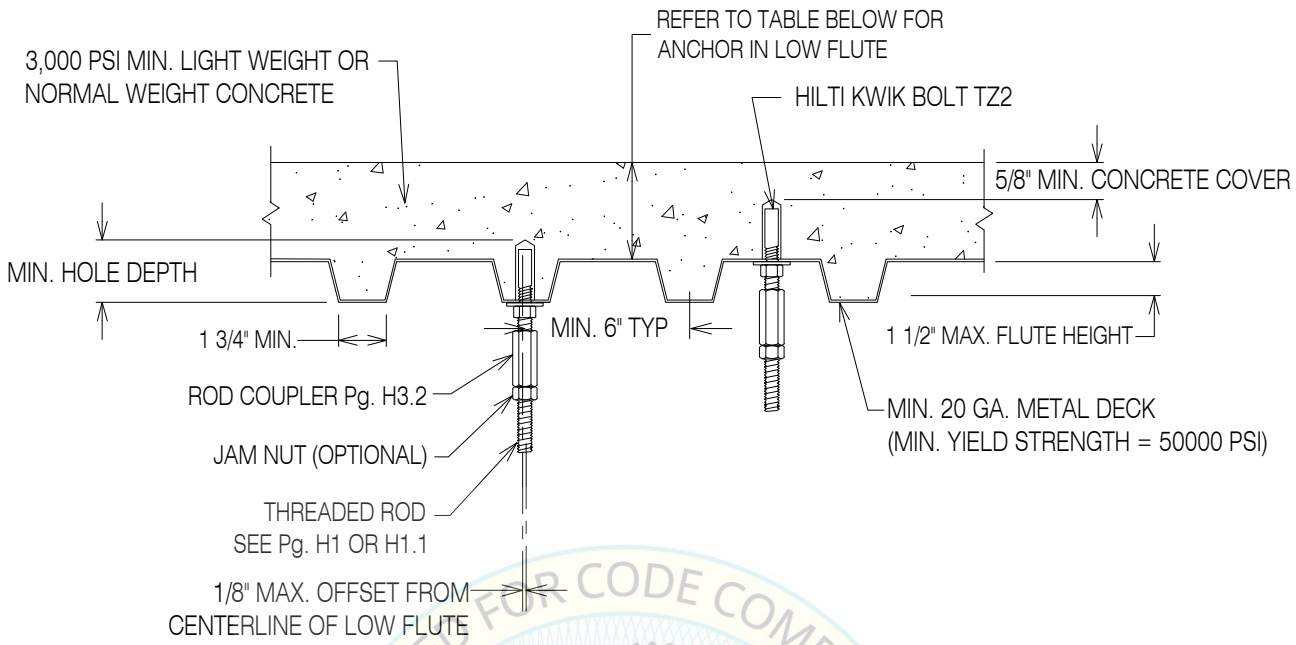

REVIEWED FOR CODE COMPLIANCE
HCAi
OPM-0403
BY: William Staehlin
DATE: 01-26-2024
CALIFORNIA BUILDING CODE 2022

Hilti Kwik Bolt TZ2 (Carbon Steel) Concrete Expansion Anchor, Minimum 3000 psi LWC
Seismically Qualified For Anchorage In Cracked Concrete
Seismic Design Categories D, E and F
ICC Report No. ESR-4266 (Dated May 2023), Table 8 and Fig. 5C

Anchor Diameter Inch	Design Tension 3 ksi Conc Lbs.	Minimum Hole Depth Inch	Minimum Effective Embed. Inch	Installation Torque Ft-Lbs.	Minimum Edge Distance Inch	Minimum Anchor Spacing Inch	Minimum Concrete Thickness[4] Metal Deck Flute Height 1 1/2"
3/8	809	2 3/4	2	30	4 1/2	6	2 1/2
1/2	562	2 3/4	2	50	4 1/2	6	2 1/2
1/2	718	4 1/4	3 1/4	50	7 1/2	9 3/4	3 3/8
5/8	718	3 3/4	2 3/4	40	6 1/2	8 1/4	3 7/8

1. MINIMUM EFFECTIVE EMBEDMENT IS AFTER THE ANCHOR HAS BEEN SET.
2. ROD LOCATION WITH SINGLE, RIGID BRACE CONNECTIONS REQUIRE ADDITIONAL SEISMIC LOAD CONSIDERATIONS BEFORE APPLYING THE ABOVE VALUES. REFER TO THE PROJECT SPECIFIC ISAT BRACING LEGEND, OR C-SERIES PAGES. THIS LOAD INCREASE DOES NOT APPLY TO CABLE BRACES OR WHERE TWO RIGID BRACES CONNECTED TO A COMMON ROD ARE INSTALLED IN OPPOSING DIRECTIONS.
3. LOAD VALUES SHOWN ARE ALLOWABLE STRESS DESIGN (ASD). CAPACITIES DERIVED IN CONFORMANCE WITH ASCE 7-16 AND ACI 318.
4. MINIMUM CONCRETE THICKNESS ABOVE TOP FLUTE BASED ON INSTALLATION IN LOWER FLUTE.
5. DESIGN IS CONTROLLED BY SEISMIC FORCES. NON SEISMIC FORCES SUCH AS GRAVITY ARE OUTSIDE THE SCOPE OF THIS OPM.

SINGLE ANCHOR HILTI KWIK BOLT TZ2 VERTICAL SUPPORT CONNECTION IN 1.5" METAL DECK SLAB

REGISTERED PROFESSIONAL ENGINEER
MARCIN WASAZNIK
S 6612
STRUCTURAL
STATE OF CALIFORNIA

ISAT
A Division of Tomarco Contractor Specialties
International Seismic Application Technology
14848 Northam Street, La Mirada, CA 90638
877-999-4728 (Toll Free) 714-523-0845 (fax)
www.isatsb.com

Rev. 3
11/21/23
Page
G6.1TZ2B

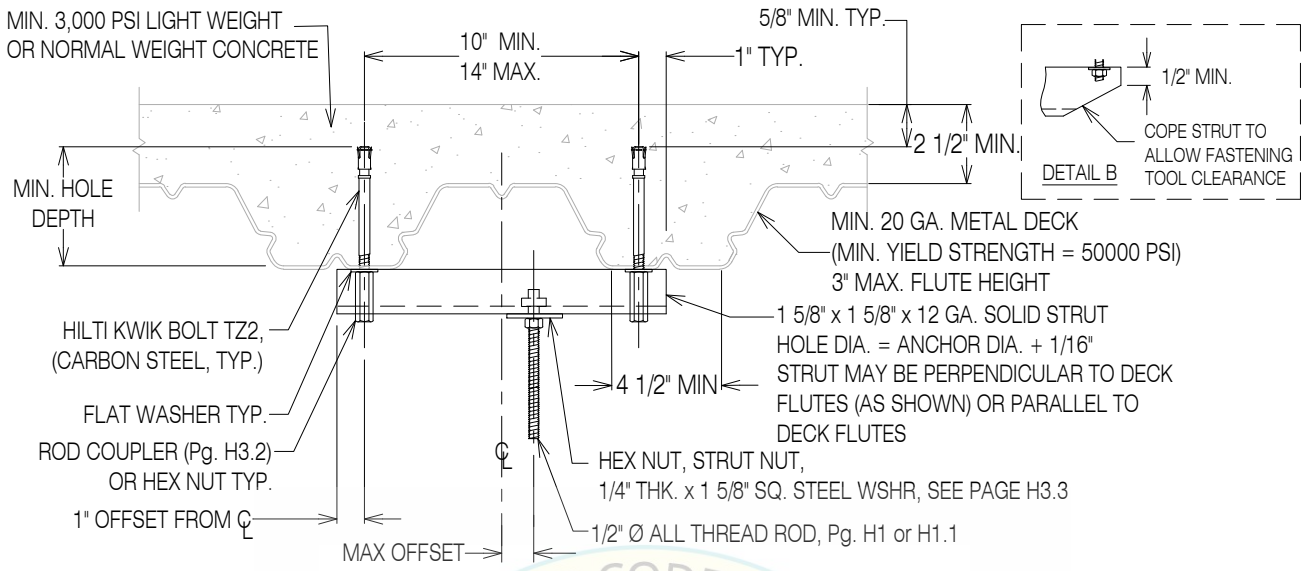

Hilti Kwik Bolt TZ2 (Carbon Steel) Concrete Expansion Anchor, Minimum 3000 psi LWC
Seismically Qualified For Anchorage In Cracked Concrete
Seismic Design Categories D, E and F
ICC Report No. ESR-4266 (Dated May 2023), Table 8 and FIG. 5A

Anchor Diameter Inch	Two Anchor Connection: Tension Design Value Lbs.[2] Vertical Support Rod Max. Offset From C.L. CL ± 0"	CL ± 1"	CL ± 2"	CL ± 3"	CL ± 4"	Minimum Hole Depth Inch	Minimum Effective Embed.[1] Inch	Installation Torque Ft-Lbs.	Minimum Edge Distance Inch	Minimum Anchor Spacing Inch
3/8	1,426	1,452	1,245	1,089	968	2 3/4	2	30	4 1/2	6
1/2	1,426	1,351	1,158	1,013	901	2 3/4	2	50	4 1/2	6
1/2	1,426	1,455	1,552	1,585	1,409	4 1/4	3 1/4	50	7 1/2	9 3/4
5/8[3]	1,426	1,455	1,552	1,747	1,854	4 3/4	4	40	8 3/4	12

1. MINIMUM EFFECTIVE EMBEDMENT IS AFTER THE ANCHOR HAS BEEN SET.
2. CONNECTION DESIGN VALUE MAY BE LIMITED BY ROD STRENGTH, PG H1, OR STRUT NUT PULL OUT STRENGTH, PG H3.3.
3. USE DETAIL B. ANCHOR SPACING LESS THAN 12" IS ACCOUNTED FOR IN THE DESIGN VALUE SHOWN.
4. ROD LOCATION WITH SINGLE, RIGID BRACE CONNECTIONS REQUIRE ADDITIONAL SEISMIC LOAD CONSIDERATIONS BEFORE APPLYING THE ABOVE VALUES. REFER TO THE PROJECT SPECIFIC ISAT BRACING LEGEND, OR C-SERIES PAGES. THIS LOAD INCREASE DOES NOT APPLY TO CABLE BRACES OR WHERE TWO RIGID BRACES CONNECTED TO A COMMON ROD ARE INSTALLED IN OPPOSING DIRECTIONS.
5. LOAD VALUES SHOWN ARE ALLOWABLE STRESS DESIGN (ASD). CAPACITIES DERIVED IN CONFORMANCE WITH ASCE 7-16 AND ACI 318.
6. REFER TO DETAIL G6.1TZ2 FOR MINIMUM CONCRETE THICKNESS ABOVE TOP FLUTE.
7. DESIGN IS CONTROLLED BY SEISMIC FORCES. NON-SEISMIC FORCES SUCH AS GRAVITY ARE OUTSIDE THE SCOPE OF THIS OPM.

DUAL HILTI KWIK BOLT TZ2 ANCHOR
VERTICAL SUPPORT CONNECTION TO METAL DECK W/CONCRETE

REGISTERED PROFESSIONAL ENGINEER MARCIN WASAZNIK S-6612 STRUCTURAL STATE OF CALIFORNIA

ISAT
A Division of Tomarco Contractor Specialties

International Seismic Application Technology
14848 Northam Street, La Mirada, CA 90638
877-999-4728 (Toll Free) 714-523-0845 (fax)
www.isatsb.com

Rev. 3
11/21/23

Page
G6.2TZ2

REVIEWED FOR CODE COMPLIANCE
OPM-0403
BY: William Staehlin
DATE: 01-26-2024
CALIFORNIA BUILDING CODE 2022

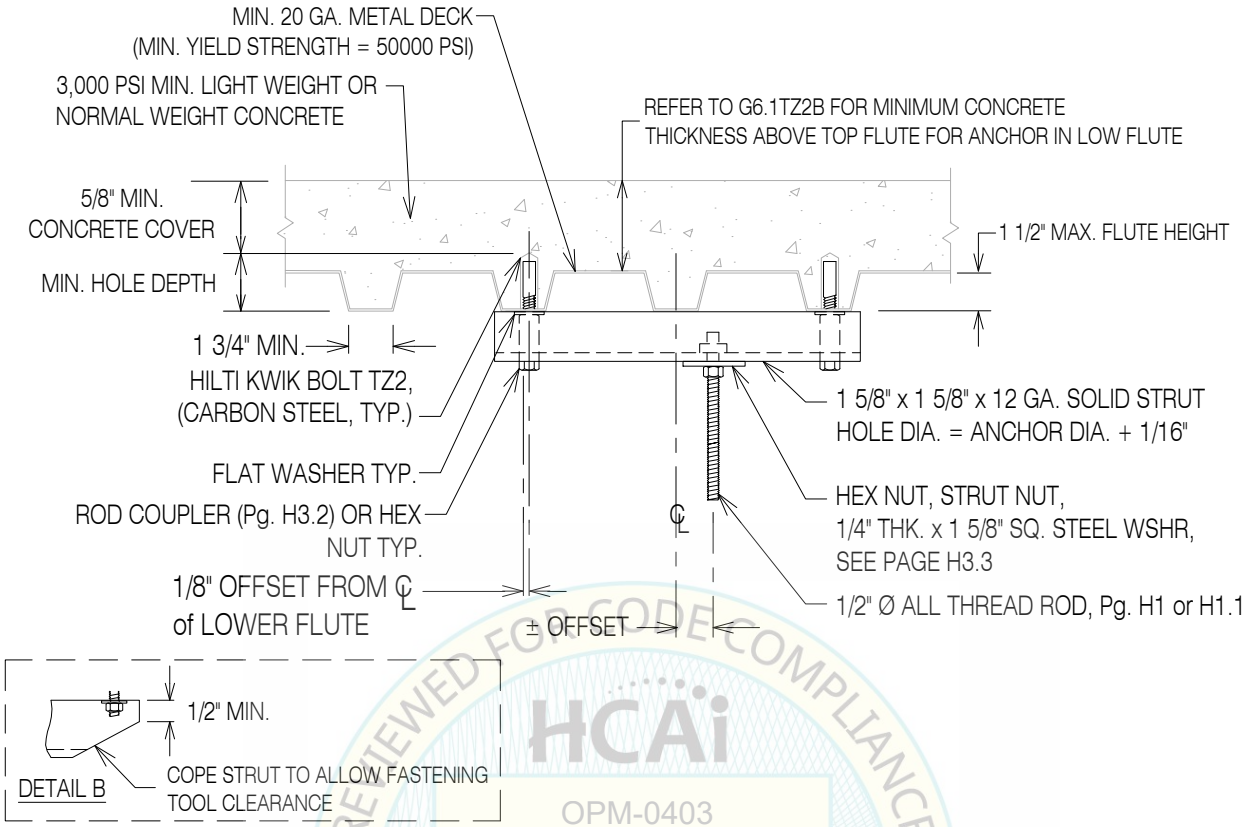

REVIEWED FOR CODE COMPLIANCE
HCAi
OPM-0403
By William Staehlin
01-26-2024
CALIFORNIA BUILDING CODES

Hilti Kwik Bolt TZ2 (Carbon Steel) Concrete Expansion Anchor, Minimum 3000 psi LWC
Seismically Qualified For Anchorage In Cracked Concrete
Seismic Design Categories D, E and F
ICC Report No. ESR-4266 (Dated May 2023), Table 8 and FIG. 5C

Anchor Diameter Inch	Two Anchor Connection Tension Design Value Lbs. [2] Vertical Support Rod Max. Offset From C.L.					Minimum Hole Depth Inch	Minimum Effective Embed. [1] Inch	Installation Torque Ft-Lbs.	Minimum Edge Distance Inch	Minimum Anchor Spacing Inch
	CL ± 0"	CL ± 1"	CL ± 2"	CL ± 3"	CL ± 4"					
3/8	1,617	1,386	1,213	1,078	970	2 3/4	2	30	4 1/2	2 5/8
1/2	1,124	963	843	749	674	2 3/4	2	50	4 1/2	2 5/8
1/2	1,435	1,230	1,076	957	861	4 1/4	3 1/4	50	7 1/2	2 5/8
5/8[3]	1,435	1,230	1,076	957	861	3 3/4	2 3/4	40	6 1/2	2 5/8

1. MINIMUM EFFECTIVE EMBEDMENT IS AFTER THE ANCHOR HAS BEEN SET.
2. CONNECTION DESIGN VALUE MAY BE LIMITED BY ROD STRENGTH, PG H1, OR STRUT NUT PULL OUT STRENGTH, PG H3.3.
3. USE DETAIL B. ANCHOR SPACING LESS THAN 12" IS ACCOUNTED FOR IN THE DESIGN VALUE SHOWN.
4. ROD LOCATION WITH SINGLE, RIGID BRACE CONNECTIONS REQUIRE ADDITIONAL SEISMIC LOAD CONSIDERATIONS BEFORE APPLYING THE ABOVE VALUES. REFER TO THE PROJECT SPECIFIC ISAT BRACING LEGEND, OR C-SERIES PAGES. THIS LOAD INCREASE DOES NOT APPLY TO CABLE BRACES OR WHERE TWO RIGID BRACES CONNECTED TO A COMMON ROD ARE INSTALLED IN OPPOSING DIRECTIONS.
5. LOAD VALUES SHOWN ARE ALLOWABLE STRESS DESIGN (ASD). CAPACITIES DERIVED IN CONFORMANCE WITH ASCE 7-16 AND ACI 318.
6. REFER TO DETAIL G6.1TZ2B FOR MINIMUM CONCRETE THICKNESS ABOVE TOP FLUTE.
7. DESIGN IS CONTROLLED BY SEISMIC FORCES. NON-SEISMIC FORCES SUCH AS GRAVITY ARE OUTSIDE THE SCOPE OF THIS OPM.

DUAL ANCHOR HILTI KWIK BOLT TZ2 VERTICAL SUPPORT CONNECTION IN 1.5" METAL DECK SLAB

REGISTERED PROFESSIONAL ENGINEER
MARCIN WASAZNIK
S 6612
STRUCTURAL
STATE OF CALIFORNIA

ISAT
A Division of Tomarco Contractor Specialties
International Seismic Application Technology
14848 Northam Street, La Mirada, CA 90638
877-999-4728 (Toll Free) 714-523-0845 (fax)
www.isatsb.com

Rev. 3
11/21/23
Page
G6.2TZ2B

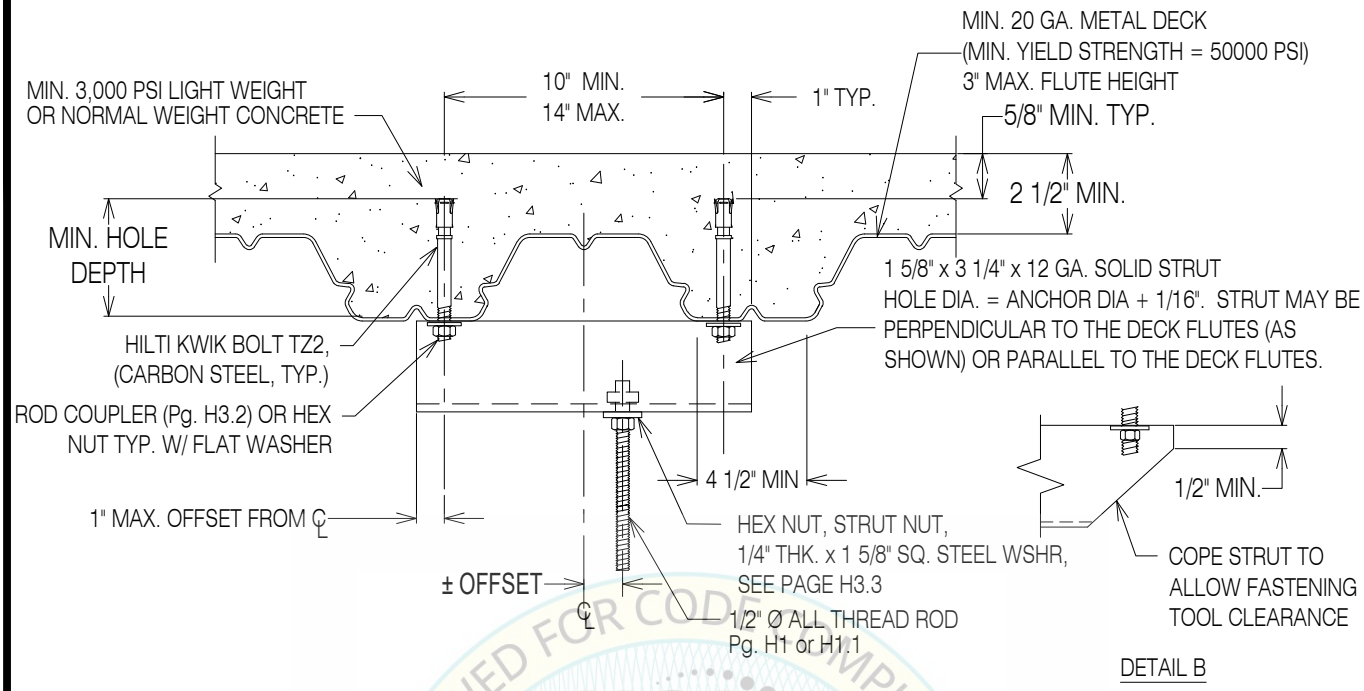

Hilti Kwik Bolt TZ2 (Carbon Steel) Concrete Expansion Anchor, Minimum 3000 psi LWC
Seismically Qualified For Anchorage In Cracked Concrete
Seismic Design Categories D, E and F
ICC Report No. ESR-4266 (Dated May 2023), Table 8 and Fig. 5A

Anchor Diameter Inch	Two Anchor Connection Tension Design Value Lbs. [2, 3] Vertical Support Rod Max. Offset From C.L.					Minimum Hole Depth Inch	Minimum Effective Embed. [1] Inch	Installation Torque Ft-Lbs.	Minimum Edge Distance Inch	Minimum Anchor Spacing Inch
	CL ± 0"	CL ± 1"	CL ± 2"	CL ± 3"	CL ± 4"					
1/2	2536	2114	1812	1585	1409	4 1/4	3 1/4	50	7 1/2	9 3/4
5/8[8]	3250	2781	2384	2086	1854	4 3/4	4	40	8 3/4	12

1. MINIMUM EFFECTIVE EMBEDMENT IS AFTER THE ANCHOR HAS BEEN SET.
2. CONNECTION DESIGN VALUE MAY BE LIMITED BY ROD STRENGTH, PAGE H1, OR STRUT NUT PULL OUT STRENGTH, PAGE H3.3
3. USE DETAIL B.
4. ANCHOR SPACING LESS THAN THE MINIMUM SPACING IS ACCOUNTED FOR IN THE DESIGN VALUES SHOWN.
5. ROD LOCATIONS WITH SINGLE, RIGID BRACE CONNECTIONS REQUIRE ADDITIONAL SEISMIC LOAD CONSIDERATIONS BEFORE APPLYING THE ABOVE VALUES. REFER TO PROJECT SPECIFIC ISAT BRACING LEGEND, OR C-SERIES PAGES. THIS LOAD INCREASE DOES NOT APPLY TO CABLE BRACES OR WHERE TWO RIGID BRACES CONNECTED TO A COMMON ROD ARE INSTALLED IN OPPOSING DIRECTIONS.
6. LOAD VALUES SHOWN ARE ALLOWABLE STRESS DESIGN (ASD). CAPACITIES DERIVED IN CONFORMANCE WITH WITH ASCE 7-16 AND ACI 318.
7. REFER TO DETAIL G6.1TZ2 FOR MINIMUM CONCRETE THICKNESS ABOVE TOP FLUTE.
8. DESIGN IS CONTROLLED BY SEISMIC FORCES. NON-SEISMIC FORCES SUCH AS GRAVITY ARE OUTSIDE THE SCOPE OF THIS OPM.

REVIEWED FOR CODE COMPLIANCE
BY: William Staehlin
DATE: 01-26-2024
CALIFORNIA BUILDING CODE 2022

DUAL HILTI KWIK BOLT TZ2 ANCHOR WITH 1 5/8" x 3 1/4" STRUT VERTICAL SUPPORT CONNECTION TO METAL DECK W/CONCRETE

REGISTERED PROFESSIONAL ENGINEER
MARCIN WASAZNIK
S-6612
STRUCTURAL
STATE OF CALIFORNIA

ISAT
A Division of Tomarco Contractor Specialties

International Seismic Application Technology
14848 Northam Street, La Mirada, CA 90638
877-999-4728 (Toll Free) 714-523-0845 (fax)
www.isatsb.com

Rev. 3
11/21/23
Page
G6.3TZ2

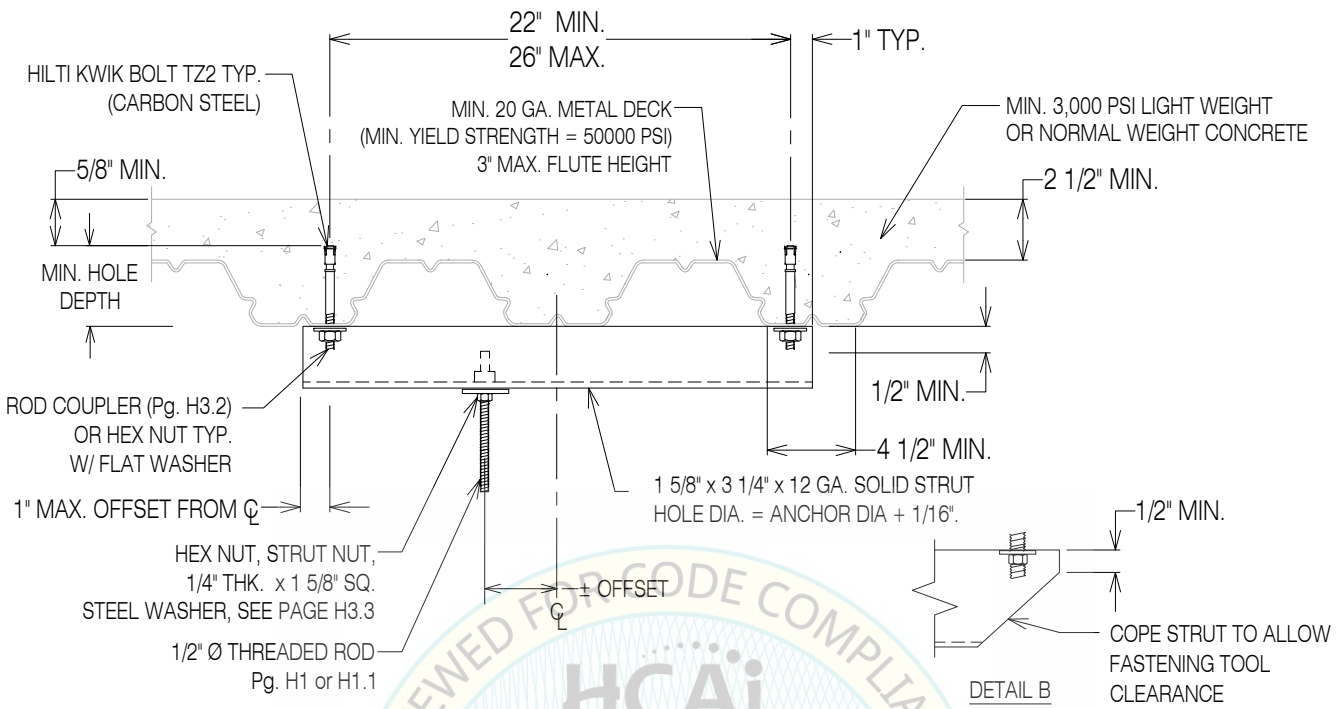

Hilti Kwik Bolt TZ2 (Carbon Steel) Concrete Expansion Anchor, Minimum 3000 psi LWC
Seismically Qualified For Anchorage In Cracked Concrete
Seismic Design Categories D, E and F
ICC Report No. ESR-4266 (Dated May 2023), Table 8 and Fig. 5A

Anchor Diameter Inch	Two Anchor Connection Tension Design Value Lbs. [2, 3] Vertical Support Rod Max. Offset From C.L.							Minimum Hole Depth Inch	Minimum Effective Embed. [1] Inch	Installation Torque Ft-Lbs.	Minimum Edge Distance Inch	Minimum Anchor Spacing Inch
	CL ± 0"	CL ± 1"	CL ± 2"	CL ± 4"	CL ± 6"	CL ± 8"	CL ± 10"					
3/8	1,743	1,598	1,475	1,278	1,128	1,009	913	2 3/4	2	30	4 1/2	6
1/2	1,621	1,486	1,372	1,189	1,049	939	849	2 3/4	2	50	4 1/2	6
1/2	2,383	2,325	2,146	1,860	1,641	1,468	1,329	4 1/4	3 1/4	50	7 1/2	9 3/4
5/8[4]	2,383	2,397	2,440	2,447	2,160	1,932	1,748	4 3/4	4	40	8 3/4	12

1. MINIMUM EFFECTIVE EMBEDMENT IS AFTER THE ANCHOR HAS BEEN SET.
2. CONNECTION DESIGN VALUE MAY BE LIMITED BY ROD STRENGTH, PAGE H1, OR STRUT NUT PULL OUT STRENGTH, PAGE H3.3
3. REFER TO DETAIL G6.1TZ2 FOR MINIMUM CONCRETE THICKNESS ABOVE TOP FLUTE.
4. USE DETAIL B.
5. REFER TO PROJECT SPECIFIC ISAT BRACING LEGEND, OR C-SERIES PAGES. THIS LOAD INCREASE DOES NOT APPLY TO CABLE BRACES WHERE TWO RIGID BRACES CONNECTED TO A COMMON ROD ARE INSTALLED IN OPPOSING DIRECTIONS.
6. LOAD VALUES SHOWN ARE ALLOWABLE STRESS DESIGN (ASD). CAPACITIES DERIVED IN CONFORMANCE WITH WITH ASCE 7-16 AND ACI 318.
7. DESIGN IS CONTROLLED BY SEISMIC FORCES. NON-SEISMIC FORCES SUCH AS GRAVITY ARE OUTSIDE THE SCOPE OF THIS OPM.

DUAL HILTI KWIK BOLT TZ2 ANCHOR WITH 1 5/8" x 3 1/4" STRUT VERTICAL SUPPORT CONNECTION TO METAL DECK W/CONC.

REGISTERED PROFESSIONAL ENGINEER MARCIN WASAZNIK S-6612 STRUCTURAL STATE OF CALIFORNIA

ISAT
A Division of Tomarco Contractor Specialties
International Seismic Application Technology
14848 Northam Street, La Mirada, CA 90638
877-999-4728 (Toll Free) 714-523-0845 (fax)
www.isatsb.com

Rev. 3
11/21/23
Page
G6.4TZ2

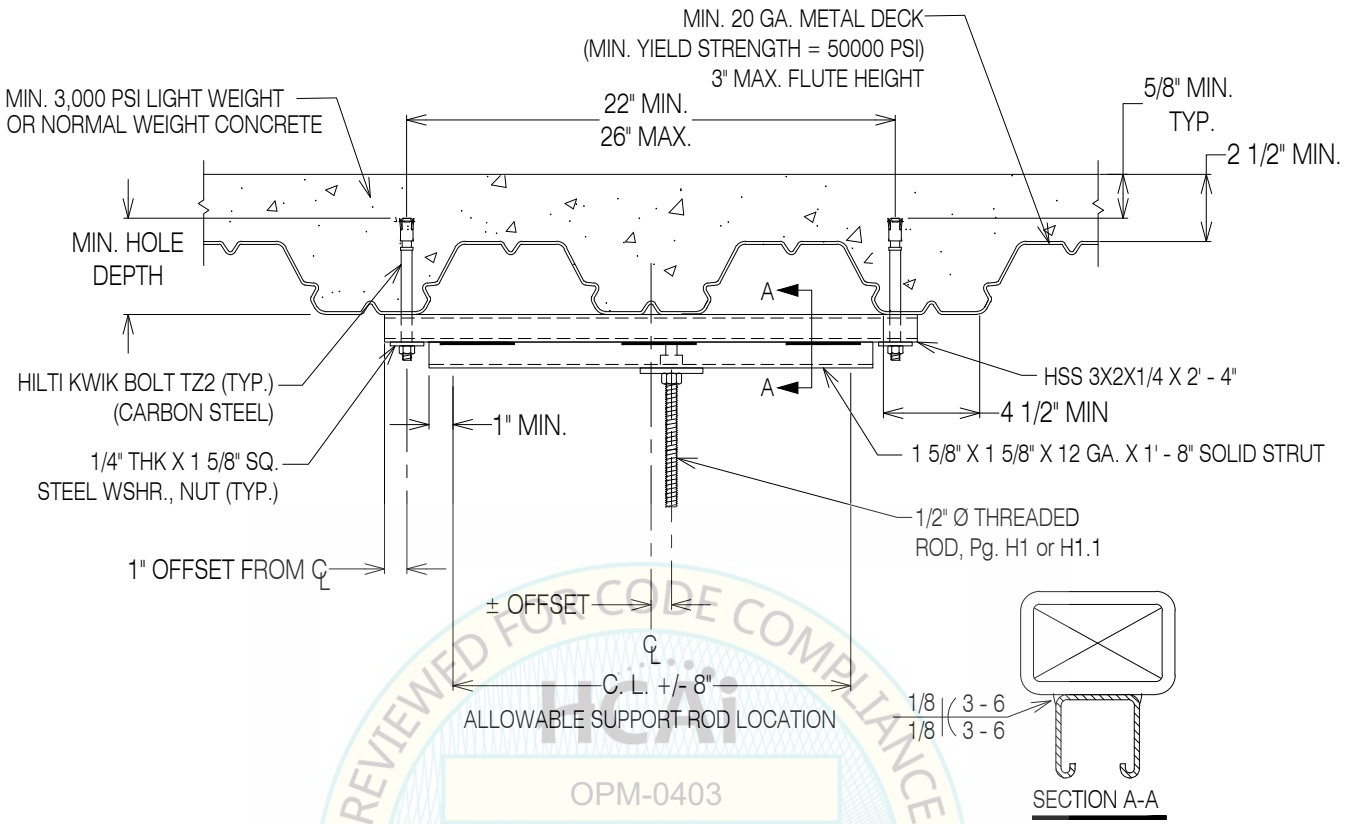

Hilti Kwik Bolt TZ2 (Carbon Steel) Concrete Expansion Anchor, Minimum 3000 psi LWC
Seismically Qualified For Anchorage In Cracked Concrete
Seismic Design Categories D, E and F
ICC Report No. ESR-4266 (Dated May 2023), Table 8 and Fig. 5A

Anchor Diameter Inch	Two Anchor Connection Tension Design Value Lbs. [2, 3] Vertical Support Rod Max. Offset From C.L.							Minimum Hole Depth Inch	Minimum Effective Embed. [1] Inch	Installation Torque Ft-Lbs.	Minimum Edge Distance Inch	Minimum Anchor Spacing Inch
	CL ± 0"	CL ± 1"	CL ± 2"	CL ± 4"	CL ± 6"	CL ± 8"	CL ± 10"					
5/8	3,253	3,059	2,824	2,447	2,160	1,932	1,748	4 3/4	4	40	8 3/4	12

1. MINIMUM EFFECTIVE EMBEDMENT IS AFTER THE ANCHOR HAS BEEN SET.
2. CONNECTION DESIGN VALUE MAY BE LIMITED BY ROD STRENGTH, PAGE H1, OR STRUT NUT PULL OUT STRENGTH, PAGE H3.3
3. ROD LOCATIONS WITH SINGLE, RIGID BRACE CONNECTIONS REQUIRE ADDITIONAL SEISMIC LOAD CONSIDERATIONS BEFORE APPLYING THE ABOVE VALUES. REFER TO PROJECT SPECIFIC ISAT BRACING LEGEND, OR C-SERIES PAGES. THIS LOAD INCREASE DOES NOT APPLY TO CABLE BRACES OR WHERE TWO RIGID BRACES ARE INSTALLED AT THE SAME LOCATION IN OPPOSING DIRECTIONS.
4. LOAD VALUES SHOWN ARE ALLOWABLE STRESS DESIGN (ASD). CAPACITIES DERIVED IN CONFORMANCE WITH WITH ASCE 7-16 AND ACI 318.
5. REFER TO DETAIL G6.1TZ2 FOR MINIMUM CONCRETE THICKNESS ABOVE TOP FLUTE.
6. DESIGN IS CONTROLLED BY SEISMIC FORCES. NON-SEISMIC FORCES SUCH AS GRAVITY ARE OUTSIDE THE SCOPE OF THIS OPM.

DUAL HILTI KWIK BOLT TZ2 ANCHOR WITH HSS BEAM VERTICAL SUPPORT CONNECTION TO METAL DECK W/CONC.

REGISTERED PROFESSIONAL ENGINEER
MARCIN WASAZNIK
S 6612
STRUCTURAL
STATE OF CALIFORNIA

ISAT
A Division of Tomarco Contractor Specialties

International Seismic Application Technology
14848 Northam Street, La Mirada, CA 90638
877-999-4728 (Toll Free) 714-523-0845 (fax)
www.isatsb.com

Rev. 3
11/21/23

Page
G6.5TZ2

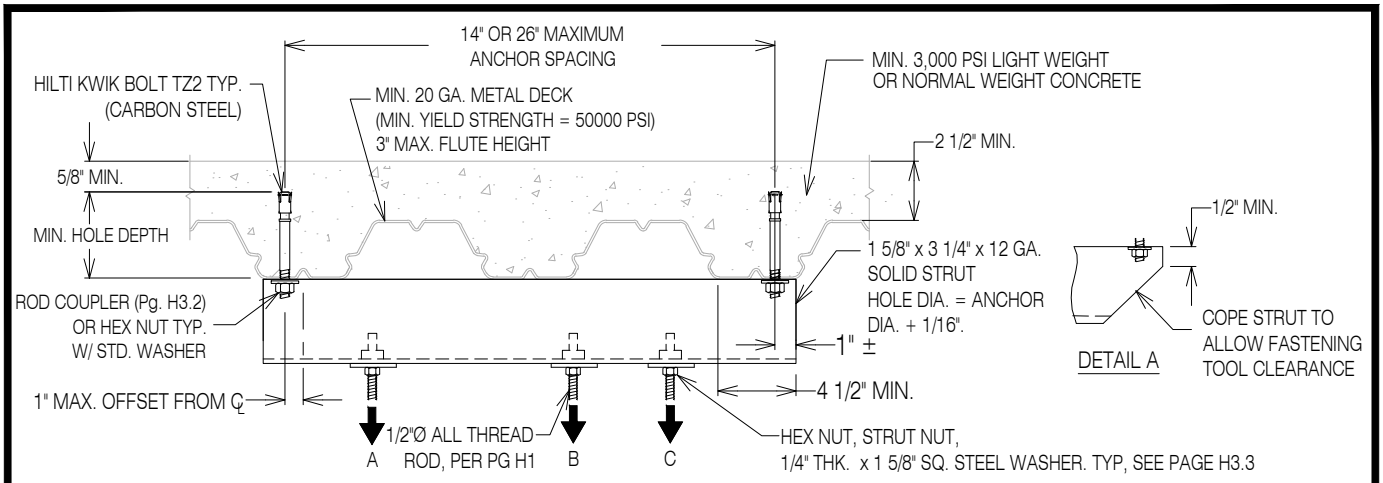

Hilti Kwik Bolt TZ2(Carbon Steel) Concrete Expansion Anchor, Minimum 3000 psi LWC

Seismically Qualified For Anchorage In Cracked Concrete

Seismic Design Categories D, E and F

ICC Report No. ESR-4266 (Dated May 2023), Table 8 and Fig. 5A

Anchor Diameter Inch	Tension Value [2, 3] 14" Spacing Lbs	Tension Value [2, 3] 26" Spacing Lbs	Minimum Hole Depth Inch	Minimum Effective Embed. [1] Inch	Installation Torque Ft - Lbs	Minimum Edge Distance Inch	Minimum Spacing Inch
3/8	938	906	2 3/4	2	30	4 1/2	6
1/2	873	843	2 3/4	2	50	4 1/2	6
1/2	1,366	1,319	4 1/4	3 1/4	50	7 1/2	9 3/4
5/8[4]	1,797	1,735	4 3/4	4	40	8 3/4	12

REVIEWED FOR CODE COMPLIANCE
HCAI
OPM-0403
BY: William Staehlin
DATE: 01-26-2024
CALIFORNIA BUILDING CODE, 2022

LOADING NOTES: SEE CHART FOR MAX ALLOWABLE LOAD. ANY NUMBER OF VERTICAL SUPPORT RODS MAY BE ATTACHED TO ABOVE ANCHORAGE, AT ANY LOCATION INBOARD OF ANCHORS.

MAXIMUM LOADING EXAMPLES:

a). MULTI VERTICAL SUPPORTS @ LOCATIONS 'A', 'B' AND 'C' W/ 3/8-INCH TZ2 ANCHORS MAX TOTAL LOAD (A+B+C) = 938 LBS. WITH 14-INCH ANCHOR SPACING.

b). SINGLE VERTICAL SUPPORT @ ANY LOCATION W/ 1/2-INCH X 4.25-INCH HOLE DEPTH TZ2 ANCHORS MAXIMUM LOAD = 1319 LBS. WITH 26-INCH ANCHOR SPACING.

NOTES:

1. MINIMUM EFFECTIVE EMBEDMENT IS AFTER THE ANCHOR HAS BEEN SET.
2. ANCHOR ASSEMBLY MAY BE INSTALLED PARALLEL TO DECK FLUTE.
3. TENSION DESIGN VALUE MAY BE LIMITED BY RODS STRENGTH, PAGE H1 OR STRUT NUT PULL-OUT STRENGTH, PAGE H3.3.
4. USE DETAIL A.
5. ROD LOCATIONS WITH SINGLE, RIGID BRACE CONNECTIONS REQUIRE ADDITIONAL SEISMIC LOAD CONSIDERATIONS BEFORE APPLYING THE ABOVE VALUES. REFER TO PROJECT SPECIFIC ISAT BRACING LEGEND, OR C-SERIES PAGES. THIS LOAD INCREASE DOES NOT APPLY TO CABLE BRACES OR WHERE TWO RIGID BRACES ARE INSTALLED AT THE SAME LOCATION IN OPPOSING DIRECTIONS.
6. LOAD VALUES SHOWN ARE ALLOWABLE STRESS DESIGN (ASD). CAPACITIES DERIVED IN CONFORMANCE WITH WITH ASCE 7-16 AND ACI 318.
7. REFER TO DETAIL G6.1TZ2 FOR MINIMUM CONCRETE THICKNESS ABOVE TOP FLUTE.
8. DESIGN IS CONTROLLED BY SEISMIC FORCES. NON-SEISMIC FORCES SUCH AS GRAVITY ARE OUTSIDE THE SCOPE OF THIS OPM.

DUAL HILTI KWIK BOLT TZ2 ANCHOR WITH 1 5/8" x 3 1/4" STRUT. VERTICAL SUPPORT CONNECTION TO METAL DECK W/CONC.

REGISTERED PROFESSIONAL ENGINEER
MARCIN WASAZNIK
S-6612
STRUCTURAL
STATE OF CALIFORNIA

ISAT
A Division of Tomarco Contractor Specialties

International Seismic Application Technology
14848 Northam Street, La Mirada, CA 90638
877-999-4728 (Toll Free) 714-523-0845 (fax)
www.isatsb.com

Rev. 3
11/21/23

Page
G6.6TZ2

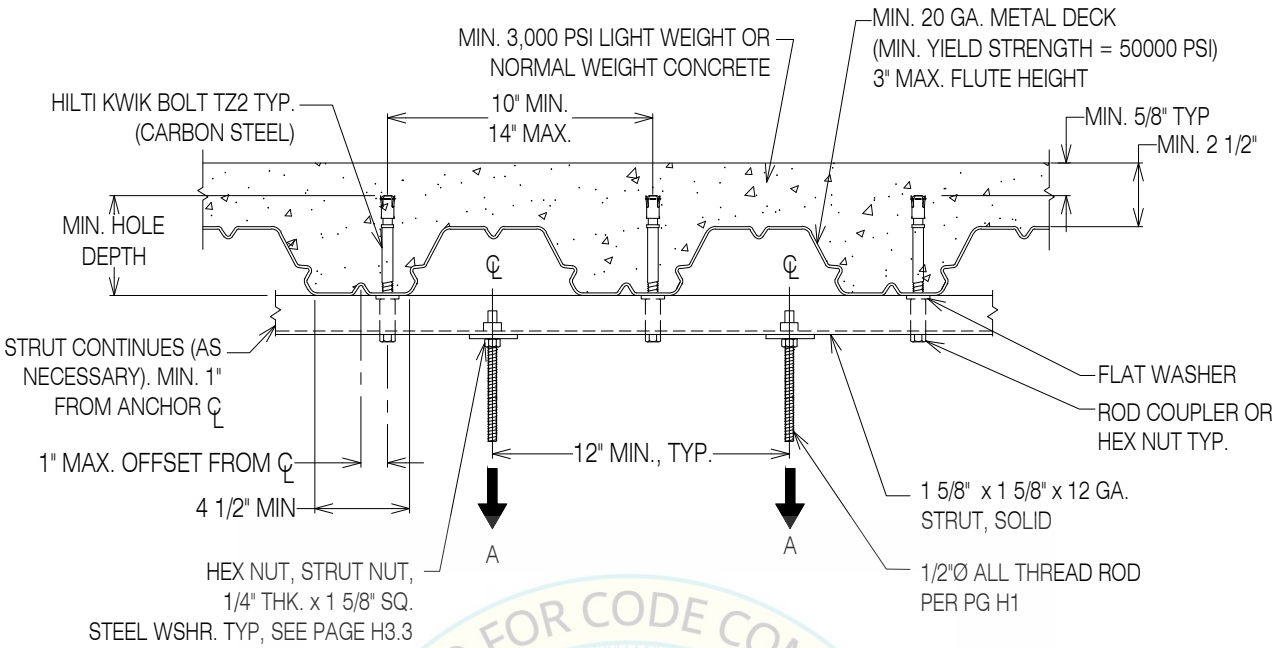

Hilti Kwik Bolt TZ2(Carbon Steel) Concrete Expansion Anchor, Minimum 3000 psi LWC
Seismically Qualified For Anchorage In Cracked Concrete
Seismic Design Categories D, E and F
ICC Report No. ESR-4266 (Dated May 2023), Table 8 and Fig. 5A

Anchor Diameter Inch	Tension Design Value Lbs.	Minimum Hole Depth Inch	Minimum Effective Embed. [1] Inch	Installation Torque Ft-Lbs.	Minimum Edge Distance Inch	Minimum Anchor Spacing Inch
3/8	634	2 3/4	2	30	4 1/2	6
1/2	590	2 3/4	2	50	4 1/2	6
1/2	922	4 1/4	3 1/4	50	7 1/2	9 3/4
5/8	1,214	4 3/4	4	40	8 3/4	12

1. MINIMUM EFFECTIVE EMBEDMENT IS AFTER THE ANCHOR HAS BEEN SET.
2. ROD LOCATIONS WITH SINGLE, RIGID BRACE CONNECTIONS REQUIRE ADDITIONAL SEISMIC LOAD CONSIDERATIONS BEFORE APPLYING THE ABOVE VALUES. REFER TO ISAT BRACING LEGEND, OR C-SERIES PAGES. THIS LOAD INCREASE DOES NOT APPLY TO CABLE BRACES OR WHERE TWO RIGID BRACES CONNECTED TO A COMMON ROD ARE INSTALLED IN OPPOSING DIRECTONS.
3. LOAD VALUES SHOWN ARE ALLOWABLE STRESS DESIGN (ASD). CAPACITIES DERIVED IN CONFORMANCE WITH ASCE 7-16 AND ACI 318.
4. REFER TO DETAIL G6.1TZ2 FOR MINIMUM CONCRETE THICKNESS ABOVE TOP FLUTE.
5. DESIGN IS CONTROLLED BY SEISMIC FORCES. NON-SEISMIC FORCES SUCH AS GRAVITY ARE OUTSIDE THE SCOPE OF THIS OPM.

MULTIPLE HILTI KWIK BOLT TZ2 ANCHORS
VERTICAL SUPPORT CONNECTION TO METAL DECK W/CONC.

REVIEWED FOR CODE COMPLIANCE
HCAi
OPM-0403
BY: William Staehlin
DATE: 01-26-2024
CALIFORNIA BUILDING CODE, 2022

REGISTERED PROFESSIONAL ENGINEER MARCIN WASAZNIK S-6612 STRUCTURAL STATE OF CALIFORNIA

ISAT
A Division of Tomarco Contractor Specialties
International Seismic Application Technology
14848 Northam Street, La Mirada, CA 90638
877-999-4728 (Toll Free) 714-523-0845 (fax)
www.isatsb.com

Rev. 3
11/21/23
Page
G6.7TZ2

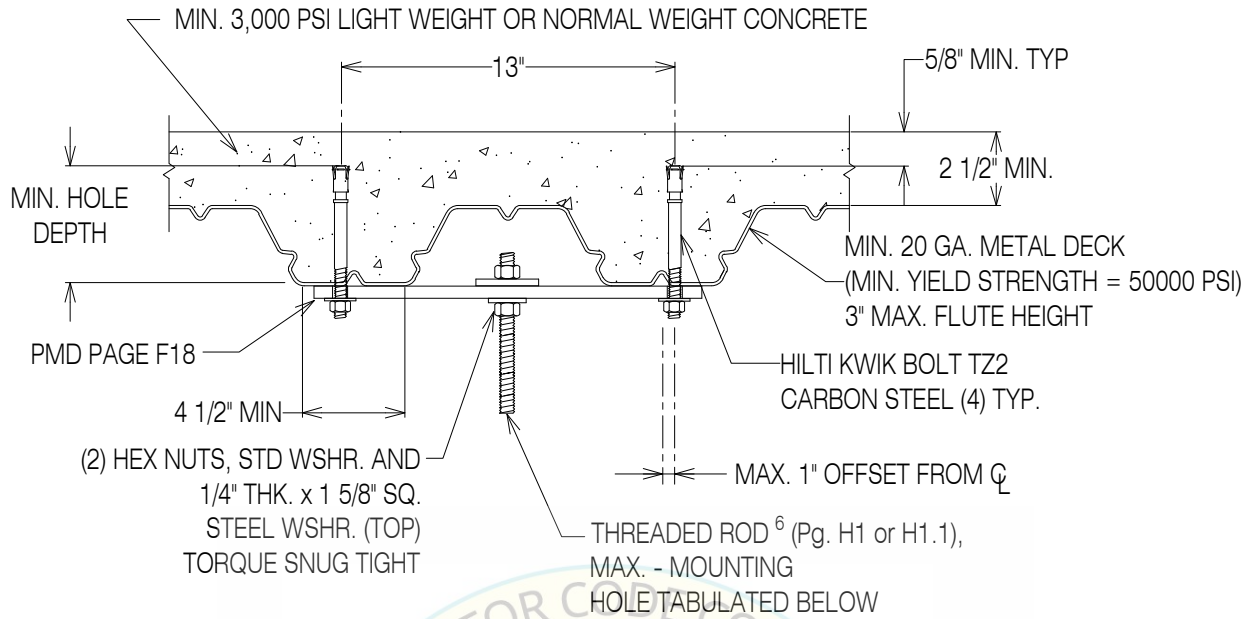

REVIEWED FOR CODE COMPLIANCE
HCAi
OPM-0403
BY: William Staehlin
DATE: 01-26-2024
CALIFORNIA BUILDING CODE 2022

Hilti Kwik Bolt TZ2 (Carbon Steel) Concrete Expansion Anchor, Minimum 3000 psi LWC
Seismically Qualified For Anchorage In Cracked Concrete
Seismic Design Categories D, E and F
ICC Report No. ESR-4266 (Dated May 2023), Table 8 and Fig. 5A

Anchor Diameter Inch	Maximum Vertical Load Lbs.	Minimum Hole Depth Inch	Minimum Effective Embed. [1] Inch	Installation Torque Ft-Lbs.	Minimum Edge Distance Inch	Minimum Anchor Spacing Inch	Plate Number Page F18	Maximum Rod Diameter Inch
3/8	1,460	2 3/4	2	30	4 1/2	6	G634	1/2
1/2	2,340	2 3/4	2	50	4 1/2	6	G645	5/8
1/2	3,500	4 1/4	3 1/4	50	7 1/2	9 3/4	G646	3/4
5/8	4,452	4 3/4	4	40	8 3/4	12	G657	7/8

1. MINIMUM EFFECTIVE EMBEDMENT IS AFTER THE ANCHOR HAS BEEN SET.
2. ROD LOCATIONS WITH SINGLE, RIGID BRACE CONNECTIONS REQUIRE ADDITIONAL SEISMIC LOAD CONSIDERATIONS BEFORE APPLYING THE ABOVE VALUES. REFER TO ISAT BRACING LEGEND, OR C-SERIES PAGES. THIS LOAD INCREASE DOES NOT APPLY TO CABLE BRACES OR WHERE TWO RIGID BRACES CONNECTED TO A COMMON ROD ARE INSTALLED IN OPPOSING DIRECTIONS.
3. LOAD VALUES SHOWN ARE ALLOWABLE STRESS DESIGN (ASD). CAPACITIES DERIVED IN CONFORMANCE WITH ASCE 7-16 AND ACI 318.
4. REFER TO DETAIL G6.1TZ2 FOR MINIMUM CONCRETE THICKNESS ABOVE TOP FLUTE.
5. DESIGN IS CONTROLLED BY SEISMIC FORCES. NON-SEISMIC FORCES SUCH AS GRAVITY ARE OUTSIDE THE SCOPE OF THIS OPM.
6. TENSION LOAD CAPACITY MAY BE LIMITED BY ROD STRENGTH, PER PAGE H1 OR H1.1.

4-ANCHOR HILTI KWIK BOLT TZ2
VERTICAL SUPPORT CONNECTION TO METAL DECK W/CONC.

REGISTERED PROFESSIONAL ENGINEER MARCIN WASAZNIK S-6612 STRUCTURAL STATE OF CALIFORNIA

ISAT
A Division of Tomarco Contractor Specialties
International Seismic Application Technology
14848 Northam Street, La Mirada, CA 90638
877-999-4728 (Toll Free) 714-523-0845 (fax)
www.isatsb.com

Rev. 2
11/21/23
Page
G6.8TZ2

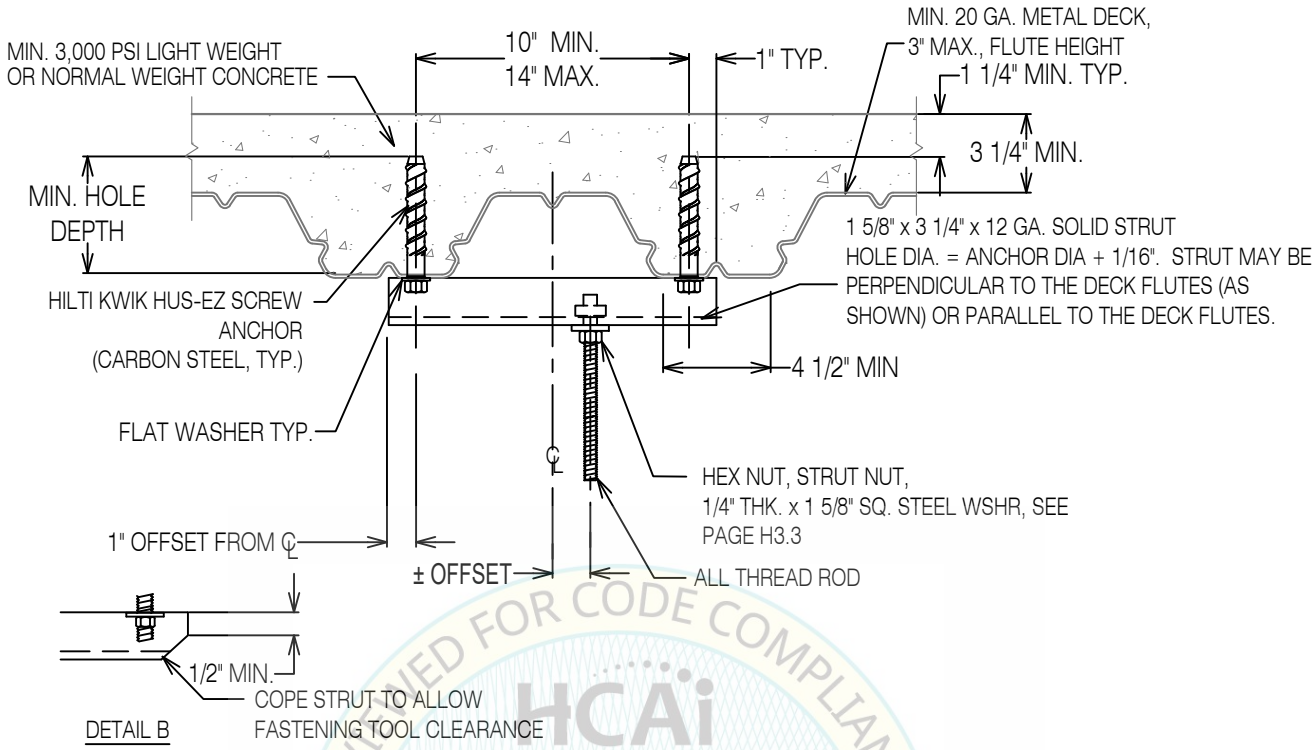

REVIEWED FOR CODE COMPLIANCE
HCAi
OPM-0403
BY: William Staehlin

Seismically Qualified For Anchorage In Cracked Concrete
Seismic Design Categories D, E and F
Hilti Kwik HUS-EZ Screw Anchor, Minimum 3000 psi LWC
ICC Report No. ESR-3027 (Dated December 2017), Table 5

Anchor Diameter Inch	Two Anchor Connection Tension Design Value Lbs. [2] Vertical Support Rod Max. Offset From C.L.					Minimum Hole Depth Inch	Minimum Effective Embed. [1] Inch	Max. Impact Wrench Torque Ft-Lbs.	Minimum Edge Distance Inch	Minimum Anchor Spacing Inch
	CL ± 0"	CL ± 1"	CL ± 2"	CL ± 3"	CL ± 4"					
1/4	471	392	336	294	262	2	1.18	114	4 1/2	6.75
3/8	615	513	439	384	342	1 7/8	1.11	114	4 1/2	6.75
1/2	623	519	445	389	346	2 5/8	1.52	137	4 1/2	6.75
1/2	1,426	1,455	1,552	1,602	1,424	4 5/8	3.22	450	7 1/2	9.66
5/8[3]	1,426	1,455	1,552	1,747	2,117	5 3/8	3.88	450	8 3/4	11.64

1. MINIMUM EFFECTIVE EMBEDMENT IS AFTER THE ANCHOR HAS BEEN SET.
2. CONNECTION DESIGN VALUE MAY BE LIMITED BY ROD STRENGTH, PG. H1, OR STRUT NUT PULL OUT STRENGTH, PG. H3.3.
3. ROD LOCATIONS WITH SINGLE, RIGID BRACE CONNECTIONS REQUIRE ADDITIONAL SEISMIC LOAD CONSIDERATIONS BEFORE APPLYING THE ABOVE VALUES. REFER TO PROJECT SPECIFIC ISAT BRACING LEGEND. THIS LOAD INCREASE DOES NOT APPLY TO CABLE BRACES OR WHERE TWO RIGID BRACES CONNECTED TO A COMMON ROD ARE INSTALLED IN OPPOSING DIRECTIONS.
4. LOAD VALUES SHOWN ARE ALLOWABLE STRESS DESIGN (ASD). CAPACITIES DERIVED IN CONFORMANCE WITH ASCE 7-10, PIN 62 & ACI 318-11, Appendix D.
5. REFER TO DETAIL D2.1HUS FOR MINIMUM CONCRETE THICKNESS ABOVE TOP FLUTE.

DUAL HILTI KWIK HUS-EZ SCREW ANCHOR W/ 1 5/8" x 1 5/8" STRUT VERTICAL SUPPORT CONNECTION TO METAL DECK W/CONCRETE

REGISTERED PROFESSIONAL ENGINEER MARCIN WASAZNIK S 6612 STRUCTURAL STATE OF CALIFORNIA

ISAT
A Division of Tomarco Contractor Specialties
International Seismic Application Technology
14848 Northam Street, La Mirada, CA 90638
877-999-4728 (Toll Free) 714-523-0845 (fax)
www.isatsb.com

Rev. 7
06/18/18

Page
G6.2HUS3

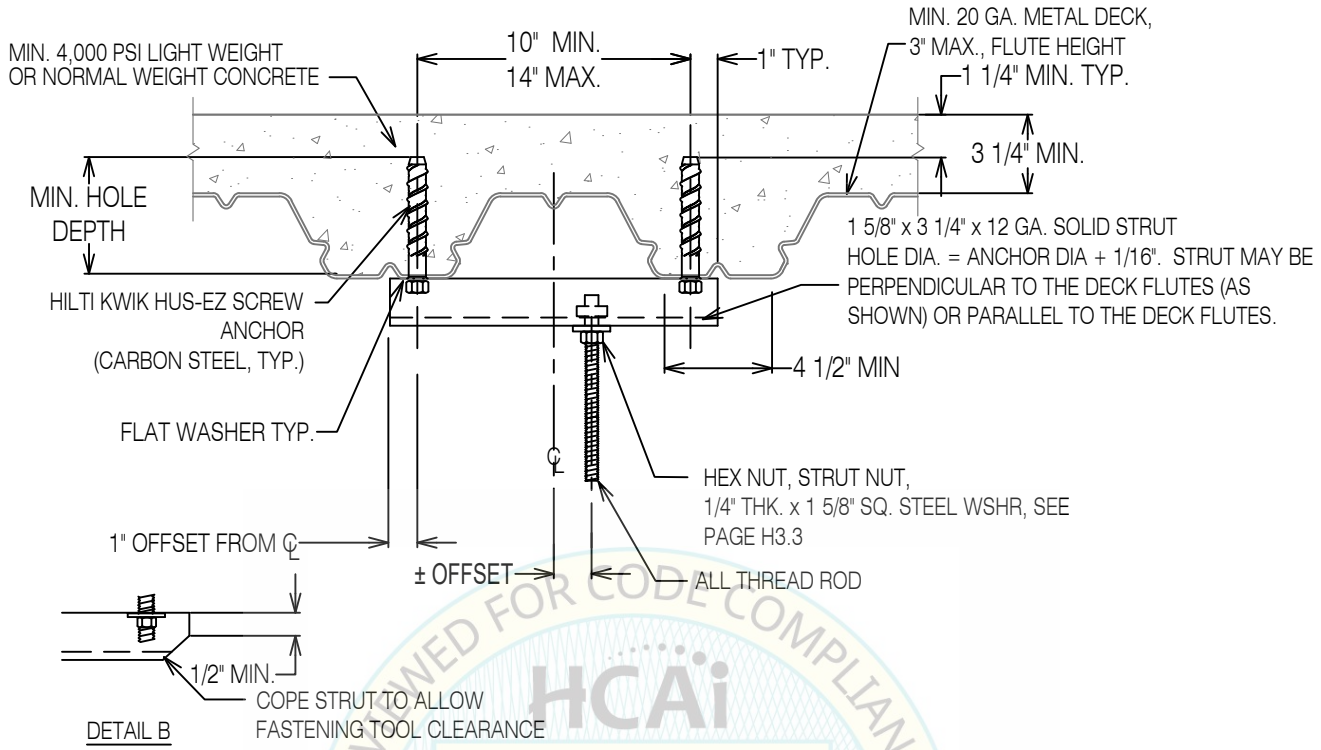

REVIEWED FOR CODE COMPLIANCE
HCAi
OPM-0403
BY: William Staehlin
DATE: 01-26-2024
CALIFORNIA BUILDING CODE 2019

Seismically Qualified For Anchorage In Cracked Concrete
Seismic Design Categories D, E and F
Hilti Kwik HUS-EZ Screw Anchor, Minimum 4000 psi LWC
ICC Report No. ESR-3027 (Dated December 2017), Table 5

Anchor Diameter Inch	Two Anchor Connection Tension Design Value Lbs. [2] Vertical Support Rod Max. Offset From C.L.					Minimum Hole Depth Inch	Minimum Effective Embed. [1] Inch	Max. Impact Wrench Torque Ft-Lbs.	Minimum Edge Distance Inch	Minimum Anchor Spacing Inch
	CL ± 0"	CL ± 1"	CL ± 2"	CL ± 3"	CL ± 4"					
1/4	544	453	388	340	302	2	1.18	114	4 1/2	6.75
3/8	710	592	507	444	395	1 7/8	1.11	114	4 1/2	6.75
1/2	719	599	514	449	399	2 5/8	1.52	137	4 1/2	6.75
1/2	1,426	1,455	1,552	1,747	1,644	4 5/8	3.22	450	7 1/2	9.66
5/8[3]	1,426	1,455	1,552	1,747	2,117	5 3/8	3.88	450	8 3/4	11.64

1. MINIMUM EFFECTIVE EMBEDMENT IS AFTER THE ANCHOR HAS BEEN SET.
2. CONNECTION DESIGN VALUE MAY BE LIMITED BY ROD STRENGTH, PG. H1, OR STRUT NUT PULL OUT STRENGTH, PG. H3.3.
3. ROD LOCATIONS WITH SINGLE, RIGID BRACE CONNECTIONS REQUIRE ADDITIONAL SEISMIC LOAD CONSIDERATIONS BEFORE APPLYING THE ABOVE VALUES. REFER TO PROJECT SPECIFIC ISAT BRACING LEGEND. THIS LOAD INCREASE DOES NOT APPLY TO CABLE BRACES OR WHERE TWO RIGID BRACES CONNECTED TO A COMMON ROD ARE INSTALLED IN OPPOSING DIRECTIONS.
4. LOAD VALUES SHOWN ARE ALLOWABLE STRESS DESIGN (ASD). CAPACITIES DERIVED IN CONFORMANCE WITH ASCE 7-10, PIN 62 & ACI 318-11, Appendix D.
5. REFER TO DETAIL D2.1HUS FOR MINIMUM CONCRETE THICKNESS ABOVE TOP FLUTE.

DUAL HILTI KWIK HUS-EZ SCREW ANCHOR W/ 1 5/8" x 1 5/8" STRUT VERTICAL SUPPORT CONNECTION TO METAL DECK W/CONCRETE

REGISTERED PROFESSIONAL ENGINEER
MARCIN WASAZNIK
S 6612
STRUCTURAL
STATE OF CALIFORNIA

ISAT
A Division of Tomarco Contractor Specialties

International Seismic Application Technology
14848 Northam Street, La Mirada, CA 90638
877-999-4728 (Toll Free) 714-523-0845 (fax)
www.isatsb.com

Rev. 7
06/18/18

Page
G6.2HUS4

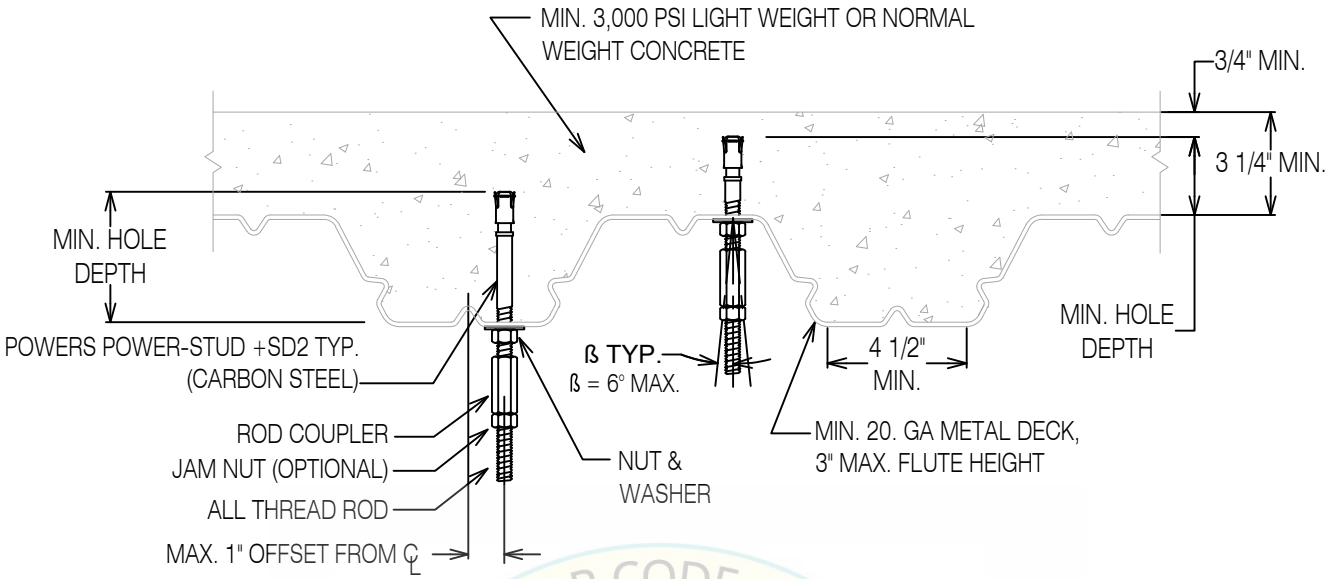

Seismically Qualified For Anchorage In Cracked Concrete
Seismic Design Categories D, E and F
Powers Power-Stud+ SD2 Concrete Expansion Anchor, Minimum 3000 psi LWC
ICC Report No. ESR-2502 (Dated May 2017), Table 1, Table 5 and Fig. 5A.

Anchor Diameter Inch	Design Tension 3 ksi Conc Lbs.	Minimum Hole Depth Inch	Minimum Effective Embed. Inch	Installation Torque Ft-Lbs.	Minimum Edge Distance Inch	Minimum Anchor Spacing Inch	Min. Concrete Thickness Above Top Flute (Inch)[3] Metal Deck Flute Height		
							1 1/2"	2"	3"
3/8	549	2 5/8	2	20	4 1/2	6 3/4	3 1/4	3 1/4	3 1/4
1/2	556	2 3/4	2	40	4 1/2	6 3/4	3 1/4	3 1/4	3 1/4
1/2	987	4	3 1/4	40	7 1/2	9 3/4	3 1/4	3 1/4	3 1/4
5/8	1,980	5 1/4	4 1/4	60	8 3/4	12 3/4	4 1/2	4	3 1/4

1. MINIMUM EFFECTIVE EMBEDMENT IS AFTER THE ANCHOR HAS BEEN SET.
2. ROD LOCATIONS WITH SINGLE, RIGID BRACE CONNECTIONS REQUIRE ADDITIONAL SEISMIC LOAD CONSIDERATIONS BEFORE APPLYING THE ABOVE VALUES. REFER TO PROJECT SPECIFIC ISAT BRACING LEGEND. THIS LOAD INCREASE DOES NOT APPLY TO CABLE BRACES OR WHERE TWO RIGID BRACES CONNECTED TO A COMMON ROD ARE INSTALLED IN OPPOSING DIRECTIONS.
3. BASED ON INSTALLATION IN LOW FLUTE.
4. LOAD VALUES SHOWN ARE ALLOWABLE STRESS DESIGN (ASD). CAPACITIES DERIVED IN CONFORMANCE WITH ASCE 7-10, PIN 62 & ACI 318-11, Appendix D.

SINGLE POWERS POWER-STUD +SD2 ANCHOR
VERTICAL SUPPORT CONNECTION TO METAL DECK W/CONCRETE

REVIEWED FOR CODE COMPLIANCE
HCAi
OPM 0403
Dr. William Staehlin
DATE: 01-26-2024
CALIFORNIA BUILDING CODE 2022

REGISTERED PROFESSIONAL ENGINEER
MARCIN WASAZNIK
S 6612
STRUCTURAL
STATE OF CALIFORNIA

ISAT
A Division of Tomarco Contractor Specialties

International Seismic Application Technology
14848 Northam Street, La Mirada, CA 90638
877-999-4728 (Toll Free) 714-523-0845 (fax)
www.isatsb.com

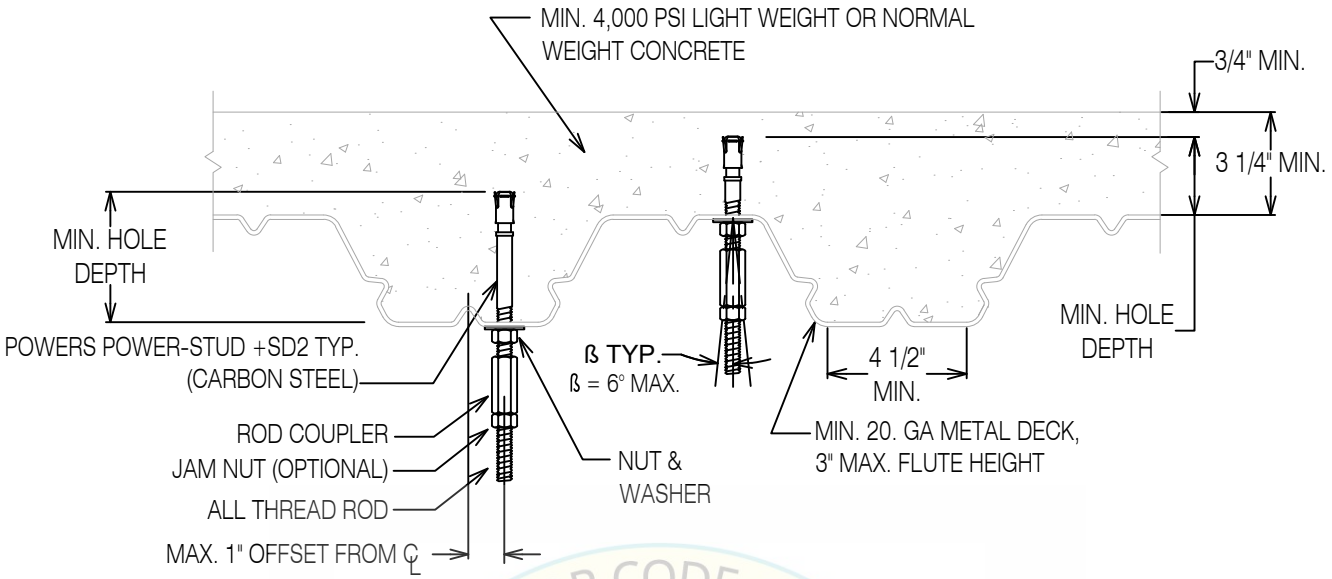

REVIEWED FOR CODE COMPLIANCE
HCAi
OPM-0403
BY: William Staehlin
DATE: 01-26-2024
CALIFORNIA BUILDING CODE 2022

Seismically Qualified For Anchorage In Cracked Concrete
Seismic Design Categories D, E and F
Powers Power-Stud+ SD2 Concrete Expansion Anchor, Minimum 4000 psi LWC
ICC Report No. ESR-2502 (Dated May 2017), Table 1, Table 5 and Fig. 5A.

Anchor Diameter Inch	Design Tension 4 ksi Conc Lbs.	Minimum Hole Depth Inch	Minimum Effective Embed. Inch	Installation Torque Ft-Lbs.	Minimum Edge Distance Inch	Minimum Anchor Spacing Inch	Min. Concrete Thickness Above Top Flute (Inch)[3] Metal Deck Flute Height		
							1 1/2"	2"	3"
3/8	604	2 5/8	2	20	4 1/2	6 3/4	3 1/4	3 1/4	3 1/4
1/2	642	2 3/4	2	40	4 1/2	6 3/4	3 1/4	3 1/4	3 1/4
1/2	1,140	4	3 1/4	40	7 1/2	9 3/4	3 1/4	3 1/4	3 1/4
5/8	2,286	5 1/4	4 1/4	60	8 3/4	12 3/4	4 1/2	4	3 1/4

1. MINIMUM EFFECTIVE EMBEDMENT IS AFTER THE ANCHOR HAS BEEN SET.
2. ROD LOCATIONS WITH SINGLE, RIGID BRACE CONNECTIONS REQUIRE ADDITIONAL SEISMIC LOAD CONSIDERATIONS BEFORE APPLYING THE ABOVE VALUES. REFER TO PROJECT SPECIFIC ISAT BRACING LEGEND. THIS LOAD INCREASE DOES NOT APPLY TO CABLE BRACES OR WHERE TWO RIGID BRACES CONNECTED TO A COMMON ROD ARE INSTALLED IN OPPOSING DIRECTIONS.
3. BASED ON INSTALLATION IN LOW FLUTE.
4. LOAD VALUES SHOWN ARE ALLOWABLE STRESS DESIGN (ASD). CAPACITIES DERIVED IN CONFORMANCE WITH ASCE 7-10, PIN 62 & ACI 318-11, Appendix D.

SINGLE POWERS POWER-STUD +SD2 ANCHOR
VERTICAL SUPPORT CONNECTION TO METAL DECK W/CONCRETE

REGISTERED PROFESSIONAL ENGINEER
MARCIN WASAZNIK
S 6612
STRUCTURAL
STATE OF CALIFORNIA

ISAT
A Division of Tomarco Contractor Specialties
International Seismic Application Technology
14848 Northam Street, La Mirada, CA 90638
877-999-4728 (Toll Free) 714-523-0845 (fax)
www.isatsb.com

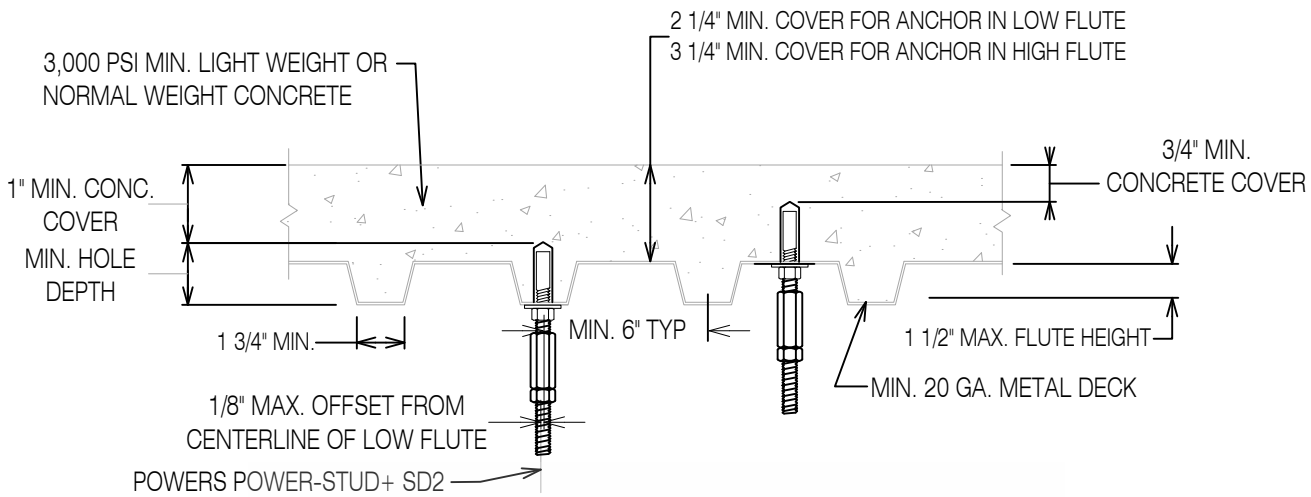

REVIEWED FOR CODE COMPLIANCE
HCAi
OPM-0403
DATE: 01-26-2024
CALIFORNIA BUILDING CODE 2022

Seismically Qualified For Anchorage In Cracked Concrete
Seismic Design Categories D, E and F
Powers Power-Stud+ SD2 Concrete Expansion Anchor, Minimum 3000 psi LWC
ICC Report No. ESR-2502 (Dated May 2017), Table 1, Table 5 and Fig. 5C.

Anchor Diameter Inch	Design Tension 3 ksi Conc Lbs.	Minimum Hole Depth Inch	Minimum Effective Embed. Inch	Installation Torque Ft-Lbs.	Minimum Edge Distance Inch	Minimum Anchor Spacing Inch	Minimum Concrete Thickness [5] Metal Deck Flute Height 1 1/2"
3/8	475	2 5/8	2	20	4 1/2	6	2 1/4
1/2	545	2 3/4	2	40	4 1/2	6	2 1/4

1. MINIMUM EFFECTIVE EMBEDMENT IS AFTER THE ANCHOR HAS BEEN SET.
2. ROD LOCATIONS WITH SINGLE, RIGID BRACE CONNECTIONS REQUIRE ADDITIONAL SEISMIC LOAD CONSIDERATIONS BEFORE APPLYING THE ABOVE VALUES. REFER TO PROJECT SPECIFIC ISAT BRACING LEGEND. THIS LOAD INCREASE DOES NOT APPLY TO CABLE BRACES OR WHERE TWO RIGID BRACES CONNECTED TO A COMMON ROD ARE INSTALLED IN OPPOSING DIRECTIONS.
3. LOAD VALUES SHOWN ARE ALLOWABLE STRESS DESIGN (ASD). CAPACITIES DERIVED IN CONFORMANCE WITH ASCE 7-10, PIN 62 & ACI 318-11, Appendix D.
4. BASED ON INSTALLATION IN LOWER FLUTE.

SINGLE ANCHOR POWERS POWER-STUD+ SD2 VERTICAL SUPPORT CONNECTION IN 1.5" METAL DECK SLAB

REGISTERED PROFESSIONAL ENGINEER MARCIN WASAZNIK S-6612 STRUCTURAL STATE OF CALIFORNIA

ISAT
A Division of Tomarco Contractor Specialties
International Seismic Application Technology
14848 Northam Street, La Mirada, CA 90638
877-999-4728 (Toll Free) 714-523-0845 (fax)
www.isatsb.com

Rev. 8
10/05/18
Page
G6.1SD2B

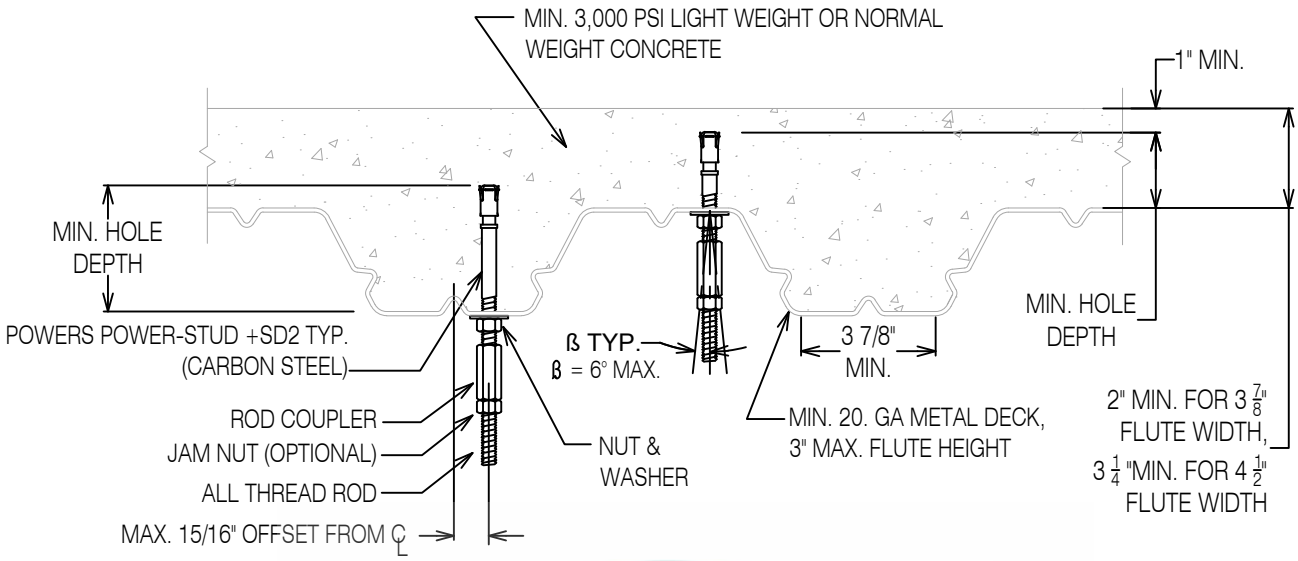

REVIEWED FOR CODE COMPLIANCE
HCAi
OPM-0403
BY: William Staehlin
DATE: 01-26-2024
CALIFORNIA BUILDING CODE 2022

Seismically Qualified For Anchorage In Cracked Concrete
Seismic Design Categories D, E and F
Powers Power-Stud+ SD2 Concrete Expansion Anchor, Minimum 3000 psi LWC
ICC Report No. ESR-2502 (Dated May 2018), Table 1, Table 5 and Fig. 5B.

Anchor Diameter Inch	Design Tension 3 ksi Conc Lbs.	Minimum Hole Depth Inch	Minimum Effective Embed. Inch	Installation Torque Ft-Lbs.	Minimum Edge Distance Inch	Minimum Anchor Spacing Inch	Min. Concrete Thickness Above Top Flute (Inch)[3] Metal Deck Flute Height 1 1/2"	2"	3"
3/8	549	2 5/8	2	20	4 1/2	6 3/4	2 1/8	2	2
1/2	556	2 3/4	2	40	4 1/2	6 3/4	2 1/4	2	2
1/2	987	4	3 1/4	40	7 1/2	9 3/4	-	-	2

1. MINIMUM EFFECTIVE EMBEDMENT IS AFTER THE ANCHOR HAS BEEN SET.
2. ROD LOCATIONS WITH SINGLE, RIGID BRACE CONNECTIONS REQUIRE ADDITIONAL SEISMIC LOAD CONSIDERATIONS BEFORE APPLYING THE ABOVE VALUES. REFER TO PROJECT SPECIFIC ISAT BRACING LEGEND. THIS LOAD INCREASE DOES NOT APPLY TO CABLE BRACES OR WHERE TWO RIGID BRACES CONNECTED TO A COMMON ROD ARE INSTALLED IN OPPOSING DIRECTIONS.
3. BASED ON INSTALLATION IN LOW FLUTE.
4. LOAD VALUES SHOWN ARE ALLOWABLE STRESS DESIGN (ASD). CAPACITIES DERIVED IN CONFORMANCE WITH ASCE 7-10, PIN 62 & ACI 318-11, Appendix D.

SINGLE POWERS POWER-STUD +SD2 ANCHOR VERTICAL SUPPORT CONNECTION TO METAL DECK W/CONCRETE (SHALLOW TOPPING SLAB)

REGISTERED PROFESSIONAL ENGINEER MARCIN WASAZNIK S-6612 STRUCTURAL STATE OF CALIFORNIA

ISAT
A Division of Tomarco Contractor Specialties
International Seismic Application Technology
14848 Northam Street, La Mirada, CA 90638
877-999-4728 (Toll Free) 714-523-0845 (fax)
www.isatsb.com

Rev. 2
12/12/19

Page
G6.1SD2S

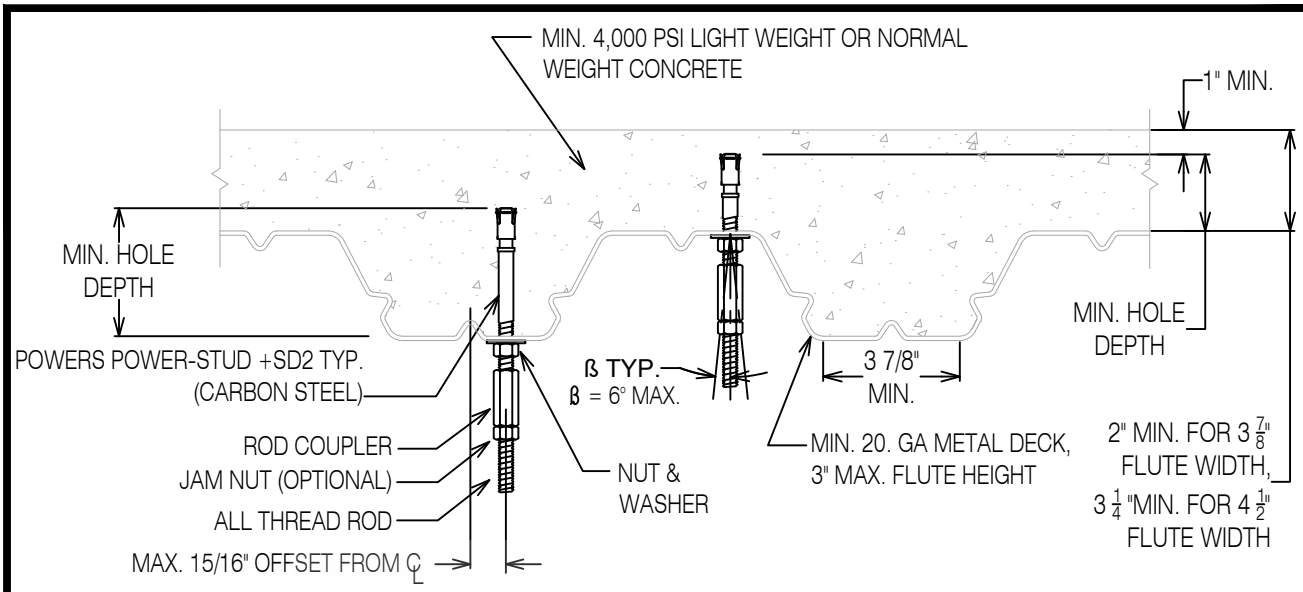

REVIEWED FOR CODE COMPLIANCE
HCAi
BY: William Staehlin
DATE: 01-26-2024
CALIFORNIA BUILDING CODE 2022

Seismically Qualified For Anchorage In Cracked Concrete
Seismic Design Categories D, E and F
Powers Power-Stud+ SD2 Concrete Expansion Anchor, Minimum 4000 psi LWC
ICC Report No. ESR-2502 (Dated May 2018), Table 1, Table 5 and Fig. 5B.

Anchor Diameter Inch	Design Tension 4 ksi Conc Lbs.	Minimum Hole Depth Inch	Minimum Effective Embed. Inch	Installation Torque Ft-Lbs.	Minimum Edge Distance Inch	Minimum Anchor Spacing Inch	Min. Concrete Thickness Above Top Flute (Inch)[3] Metal Deck Flute Height		
							1 1/2"	2"	3"
3/8	604	2 5/8	2	20	4 1/2	6 3/4	2 1/8	2	2
1/2	642	2 3/4	2	40	4 1/2	6 3/4	2 1/4	2	2
1/2	1,140	4	3 1/4	40	7 1/2	9 3/4	-	-	2

1. MINIMUM EFFECTIVE EMBEDMENT IS AFTER THE ANCHOR HAS BEEN SET.
2. ROD LOCATIONS WITH SINGLE, RIGID BRACE CONNECTIONS REQUIRE ADDITIONAL SEISMIC LOAD CONSIDERATIONS BEFORE APPLYING THE ABOVE VALUES. REFER TO PROJECT SPECIFIC ISAT BRACING LEGEND. THIS LOAD INCREASE DOES NOT APPLY TO CABLE BRACES OR WHERE TWO RIGID BRACES CONNECTED TO A COMMON ROD ARE INSTALLED IN OPPOSING DIRECTIONS.
3. BASED ON INSTALLATION IN LOW FLUTE.
4. LOAD VALUES SHOWN ARE ALLOWABLE STRESS DESIGN (ASD). CAPACITIES DERIVED IN CONFORMANCE WITH ASCE 7-10, PIN 62 & ACI 318-11, Appendix D.

SINGLE POWERS POWER-STUD +SD2 ANCHOR VERTICAL SUPPORT CONNECTION TO METAL DECK W/CONCRETE (SHALLOW TOPPING SLAB)

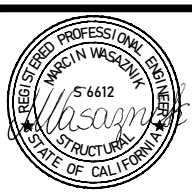

ISAT
A Division of Tomarco Contractor Specialties
International Seismic Application Technology
14848 Northam Street, La Mirada, CA 90638
877-999-4728 (Toll Free) 714-523-0845 (fax)
www.isatsb.com

Rev. 2
12/12/19
Page
G6.1SD2S4

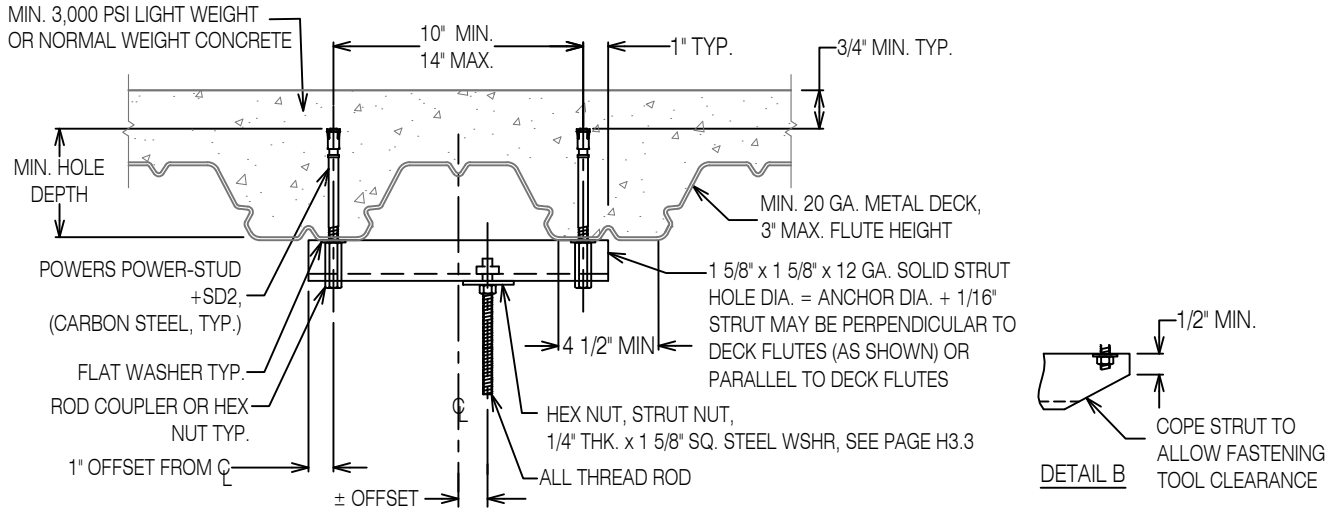

Seismically Qualified For Anchorage In Cracked Concrete
Seismic Design Categories D, E and F
Powers Power-Stud+ SD2 Concrete Expansion Anchor, Minimum 3000 psi LWC
ICC Report No. ESR-2502 (Dated May 2017), Table 1, Table 5 and Fig. 5A.

Anchor Diameter Inch	Two Anchor Connection Tension Design Value Lbs. [2] Vertical Support Rod Max. Offset From C.L.					Minimum Hole Depth Inch	Minimum Effective Embed. [1] Inch	Installation Torque Ft-Lbs.	Minimum Edge Distance Inch	Minimum Anchor Spacing Inch
	CL ± 0"	CL ± 1"	CL ± 2"	CL ± 3"	CL ± 4"					
3/8	1,097	914	784	686	610	2 5/8	2	20	4 1/2	6
1/2	1,112	927	795	695	618	2 3/4	2	40	4 1/2	6
1/2	1,426	1,455	1,410	1,234	1,097	4	3 1/4	40	7 1/2	9 3/4
5/8 [3]	1,426	1,455	1,552	1,747	2,117	5 1/4	4 1/4	60	8 3/4	12 3/4

1. MINIMUM EFFECTIVE EMBEDMENT IS AFTER THE ANCHOR HAS BEEN SET.
2. CONNECTION DESIGN VALUE MAY BE LIMITED BY ROD STRENGTH, PG. H1, OR STRUT NUT PULL OUT STRENGTH, PG. H3.3.
3. USE DETAIL B. ANCHOR SPACING LESS THAN 12" IS ACCOUNTED FOR IN THE DESIGN VALUES SHOWN.
4. ROD LOCATIONS WITH SINGLE, RIGID BRACE CONNECTIONS REQUIRE ADDITIONAL SEISMIC LOAD CONSIDERATIONS BEFORE APPLYING THE ABOVE VALUES. REFER TO PROJECT SPECIFIC ISAT BRACING LEGEND. THIS LOAD INCREASE DOES NOT APPLY TO CABLE BRACES OR WHERE TWO RIGID BRACES CONNECTED TO A COMMON ROD ARE INSTALLED IN OPPOSING DIRECTIONS.
5. LOAD VALUES SHOWN ARE ALLOWABLE STRESS DESIGN (ASD). CAPACITIES DERIVED IN CONFORMANCE WITH ASCE 7-10, PIN 62 & ACI 318-11, Appendix D.
6. REFER TO DETAIL G6.1SD2 FOR MINIMUM CONCRETE THICKNESS ABOVE TOP FLUTE.

DUAL POWERS POWER-STUD +SD2 ANCHOR
VERTICAL SUPPORT CONNECTION TO METAL DECK W/ CONCRETE

REGISTERED PROFESSIONAL ENGINEER MARCIN WASAZNIK S 6612 STRUCTURAL STATE OF CALIFORNIA

ISAT
A Division of Tomarco Contractor Specialties

International Seismic Application Technology
14848 Northam Street, La Mirada, CA 90638
877-999-4728 (Toll Free) 714-523-0845 (fax)
www.isatsb.com

Rev. 7
06/18/18

Page
G6.2SD2

REVIEWED FOR CODE COMPLIANCE OPM-0403 BY: William Staehlin DATE: 01-26-2024 CALIFORNIA BUILDING CODE 2022

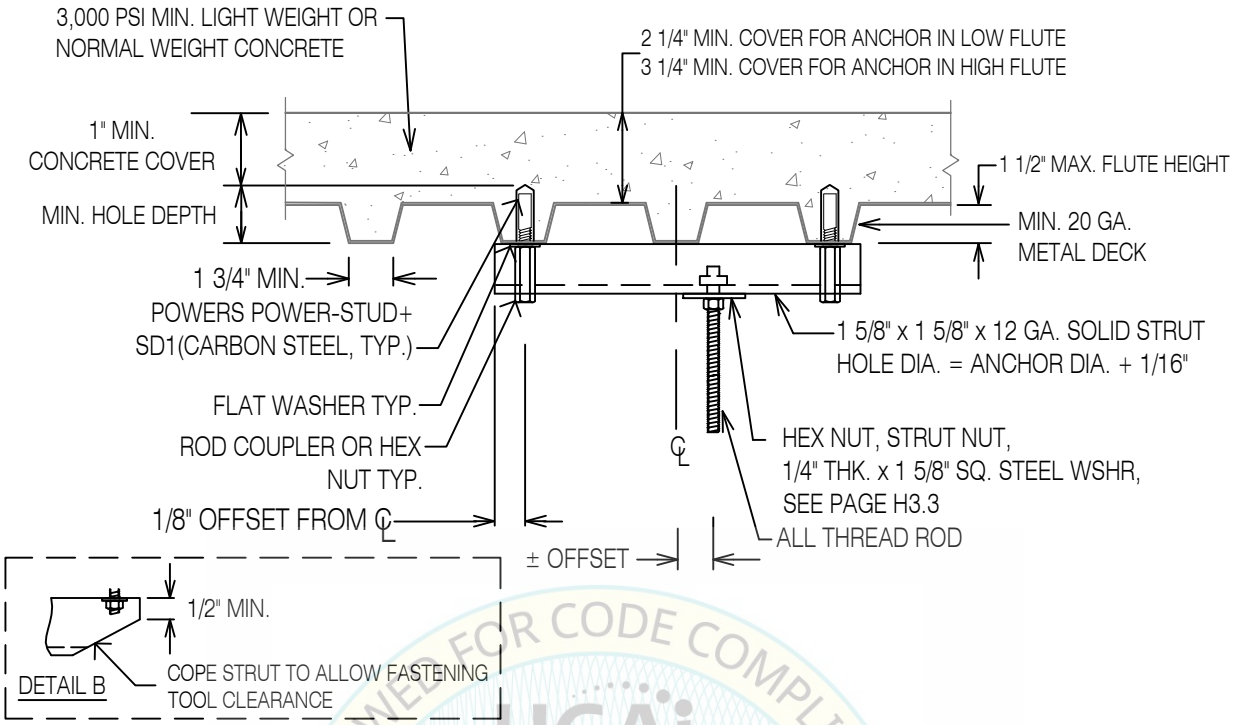

REVIEWED FOR CODE COMPLIANCE
HCAi
OPM-0403
By: William Staehlin
Date: 01-26-2024
CALIFORNIA BUILDING CODE

Seismically Qualified For Anchorage In Cracked Concrete
Seismic Design Categories D, E and F
Powers Power-Stud+ SD2 Concrete Expansion Anchor, Minimum 3000 psi LWC
ICC Report No. ESR-2502 (Dated May 2017), Table 1, Table 5 and Fig. 5C.

Anchor Diameter Inch	Two Anchor Connection Tension Design Value Lbs. [2] Vertical Offset From C.L.					Minimum Hole Depth Inch	Minimum Effective Embed. [1] Inch	Installation Torque Ft-Lbs.	Minimum Edge Distance Inch	Minimum Anchor Spacing Inch
	CL ± 0"	CL ± 1"	CL ± 2"	CL ± 3"	CL ± 4"					
3/8	949	814	712	633	570	2 5/8	2	20	4 1/2	2 5/8
1/2	1,090	934	817	726	654	2 3/4	2	40	4 1/2	2 5/8

1. MINIMUM EFFECTIVE EMBEDMENT IS AFTER THE ANCHOR HAS BEEN SET.
2. CONNECTION DESIGN VALUE MAY BE LIMITED BY ROD STRENGTH, PG. H1, OR STRUT NUT PULLOUT STRENGTH, PG. H3.3.
3. USE DETAIL B. ANCHOR SPACING LESS THAN 12" IS ACCOUNTED FOR IN THE DESIGN VALUES SHOWN.
4. ROD LOCATIONS WITH SINGLE, RIGID BRACE CONNECTIONS REQUIRE ADDITIONAL SEISMIC LOAD CONSIDERATIONS BEFORE APPLYING THE ABOVE VALUES. REFER TO PROJECT SPECIFIC ISAT BRACING LEGEND. THIS LOAD INCREASE DOES NOT APPLY TO CABLE BRACES OR WHERE TWO RIGID BRACES CONNECTED TO A COMMON ROD ARE INSTALLED IN OPPOSING DIRECTIONS.
5. LOAD VALUES SHOWN ARE ALLOWABLE STRESS DESIGN (ASD). CAPACITIES DERIVED IN CONFORMANCE WITH ASCE 7-10, PIN 62 & ACI 318-11, Appendix D.
6. REFER TO DETAIL G6.1SD2B FOR MINIMUM CONCRETE THICKNESS ABOVE TOP FLUTE.

DUAL ANCHOR POWERS POWER-STUD+ SD2 VERTICAL SUPPORT CONNECTION IN 1.5" METAL DECK SLAB

REGISTERED PROFESSIONAL ENGINEER MARCIN WASAZNIK S-6612 STRUCTURAL STATE OF CALIFORNIA

ISAT
A Division of Tomarco Contractor Specialties
International Seismic Application Technology
14848 Northam Street, La Mirada, CA 90638
877-999-4728 (Toll Free) 714-523-0845 (fax)
www.isatsb.com

Rev. 8
10/05/18

Page
G6.2SD2B

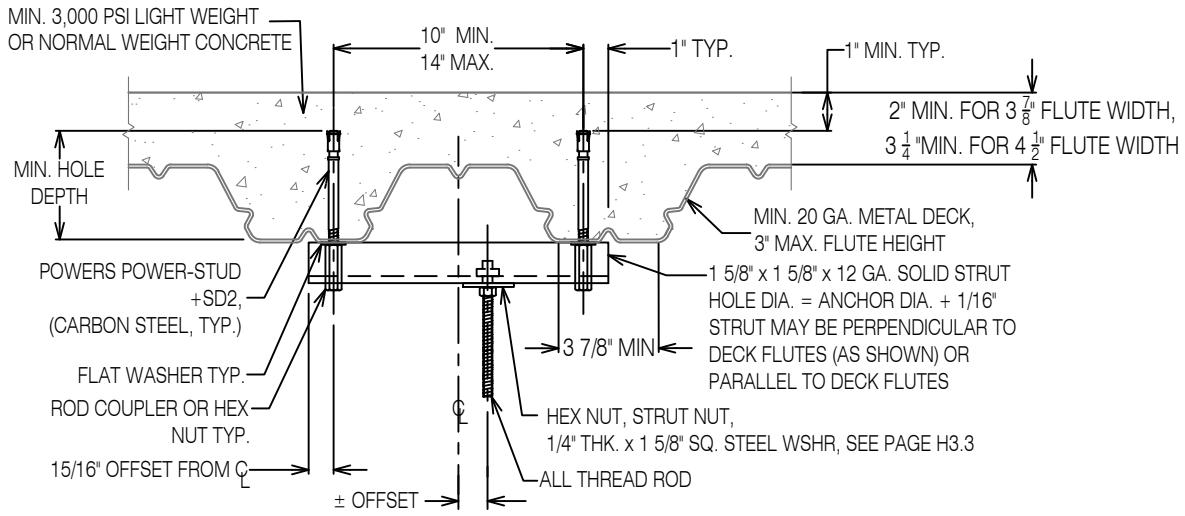

Seismically Qualified For Anchorage In Cracked Concrete
Seismic Design Categories D, E and F
Powers Power-Stud+ SD2 Concrete Expansion Anchor, Minimum 3000 psi LWC
ICC Report No. ESR-2502 (Dated May 2018), Table 1, Table 5 and Fig. 5B.

Anchor Diameter Inch	Two Anchor Connection Tension Design Value Lbs. [2] Vertical Support Rod Max. Offset From C.L.					Minimum Hole Depth Inch	Minimum Effective Embed. [1] Inch	Installation Torque Ft-Lbs.	Minimum Edge Distance Inch	Minimum Anchor Spacing Inch
	CL ± 0"	CL ± 1"	CL ± 2"	CL ± 3"	CL ± 4"					
3/8	1,097	914	784	686	610	2 5/8	2	20	4 1/2	6
1/2	1,112	927	795	695	618	2 3/4	2	40	4 1/2	6
1/2	1,426	1,455	1,410	1,234	1,097	4	3 1/4	40	7 1/2	9 3/4

1. MINIMUM EFFECTIVE EMBEDMENT IS AFTER THE ANCHOR HAS BEEN SET.
2. CONNECTION DESIGN VALUE MAY BE LIMITED BY ROD STRENGTH, PG. H1, OR STRUT NUT PULL OUT STRENGTH, PG. H3.3.
3. ANCHOR SPACING LESS THAN 12" IS ACCOUNTED FOR IN THE DESIGN VALUES SHOWN.
4. ROD LOCATIONS WITH SINGLE, RIGID BRACE CONNECTIONS REQUIRE ADDITIONAL SEISMIC LOAD CONSIDERATIONS BEFORE APPLYING THE ABOVE VALUES. REFER TO PROJECT SPECIFIC ISAT BRACING LEGEND.
   THIS LOAD INCREASE DOES NOT APPLY TO CABLE BRACES OR WHERE TWO RIGID BRACES CONNECTED TO A COMMON ROD ARE INSTALLED IN OPPOSING DIRECTIONS.
5. LOAD VALUES SHOWN ARE ALLOWABLE STRESS DESIGN (ASD). CAPACITIES DERIVED IN CONFORMANCE WITH ASCE 7-10, PIN 62 & ACI 318-11, Appendix D.
6. REFER TO DETAIL G6.1SD2S FOR MINIMUM CONCRETE THICKNESS ABOVE TOP FLUTE.

REVIEWED FOR CODE COMPLIANCE
OPM-0403
BY: William Staehlin
DATE: 01-26-2024
CALIFORNIA BUILDING CODE 2022

DUAL POWERS POWER-STUD +SD2 ANCHOR
VERTICAL SUPPORT CONNECTION TO METAL DECK W/ CONCRETE
(SHALLOW TOPPING SLAB)

REGISTERED PROFESSIONAL ENGINEER
MARCIN WASAZNIK
S 6612
STRUCTURAL
STATE OF CALIFORNIA

ISAT
A Division of Tomarco Contractor Specialties

International Seismic Application Technology
14848 Northam Street, La Mirada, CA 90638
877-999-4728 (Toll Free) 714-523-0845 (fax)
www.isatsb.com

Rev. 2
12/12/19

Page
G6.2SD2S

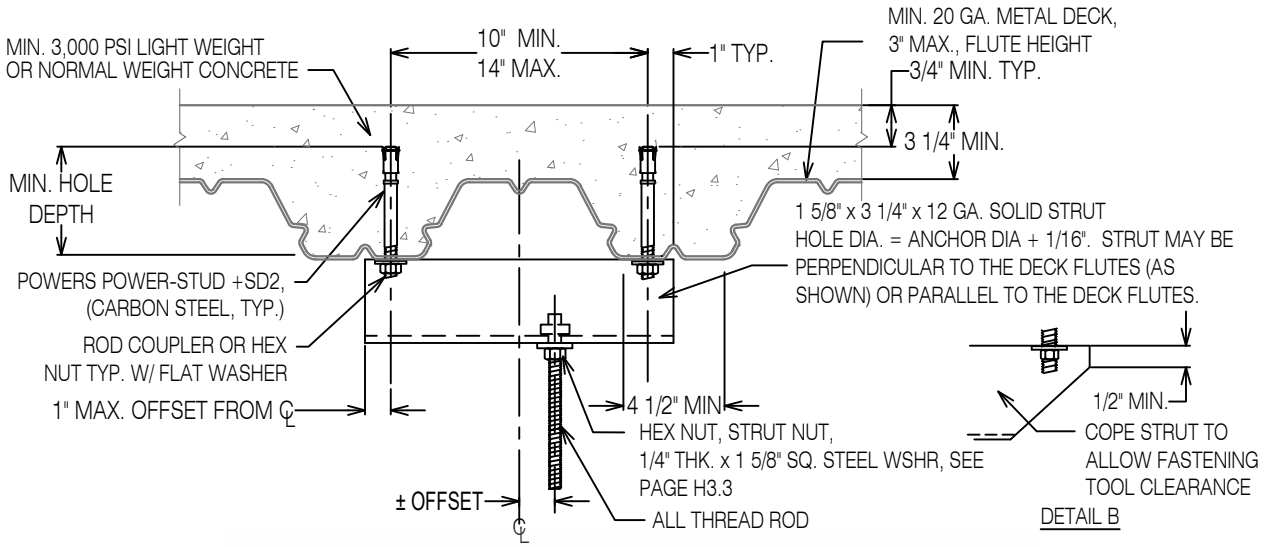

Seismically Qualified For Anchorage In Cracked Concrete
Seismic Design Categories D, E and F
Powers Power-Stud+ SD2 Concrete Expansion Anchor, Minimum 3000 psi LWC
ICC Report No. ESR-2502 (Dated May 2018), Table 1, Table 5 and Fig. 5A.

Anchor Diameter Inch	Two Anchor Connection Tension Design Value Lbs. [2] Vertical Support Rod Max. Offset From C.L.					Minimum Hole Depth Inch	Minimum Effective Embed. [1] Inch	Installation Torque Ft-Lbs.	Minimum Edge Distance Inch	Minimum Anchor Spacing Inch
	CL ± 0"	CL ± 1"	CL ± 2"	CL ± 3"	CL ± 4"					
1/2	1974	1645	1410	1234	1097	4	3 1/4	40	7 1/2	9 3/4
5/8 [3]	3250	3250	2829	2475	2200	5 1/4	4 1/4	60	8 3/4	12 3/4

1. MINIMUM EFFECTIVE EMBEDMENT IS AFTER THE ANCHOR HAS BEEN SET.
2. CONNECTION DESIGN VALUE MAY BE LIMITED BY ROD STRENGTH, PG. H1, OR STRUT NUT PULL OUT STRENGTH, PG. H3.3.
3. USE DETAIL B.
4. ROD LOCATIONS WITH SINGLE, RIGID BRACE CONNECTIONS REQUIRE ADDITIONAL SEISMIC LOAD CONSIDERATIONS BEFORE APPLYING THE ABOVE VALUES. REFER TO PROJECT SPECIFIC ISAT BRACING LEGEND. THIS LOAD INCREASE DOES NOT APPLY TO CABLE BRACES OR WHERE TWO RIGID BRACES CONNECTED TO A COMMON ROD ARE INSTALLED IN OPPOSING DIRECTIONS.
5. LOAD VALUES SHOWN ARE ALLOWABLE STRESS DESIGN (ASD). CAPACITIES DERIVED IN CONFORMANCE WITH ASCE 7-10, PIN 62 & ACI 318-11, Appendix D.

OPM-0403
REVIEWED BY: William Staehlin
DATE: 01-26-2024
CALIFORNIA BUILDING CODE

DUAL POWERS POWER-STUD +SD2 ANCHOR
WITH 1 5/8" x 3 1/4" STRUT
VERTICAL SUPPORT CONNECTION TO METAL DECK W/CONCRETE

REGISTERED PROFESSIONAL ENGINEER
MARCIN WASAZNIK
S 6612
STRUCTURAL
STATE OF CALIFORNIA

ISAT
A Division of Tomarco Contractor Specialties

International Seismic Application Technology
14848 Northam Street, La Mirada, CA 90638
877-999-4728 (Toll Free) 714-523-0845 (fax)
www.isatsb.com

Rev. 7
09/18/18

Page
G6.3SD2

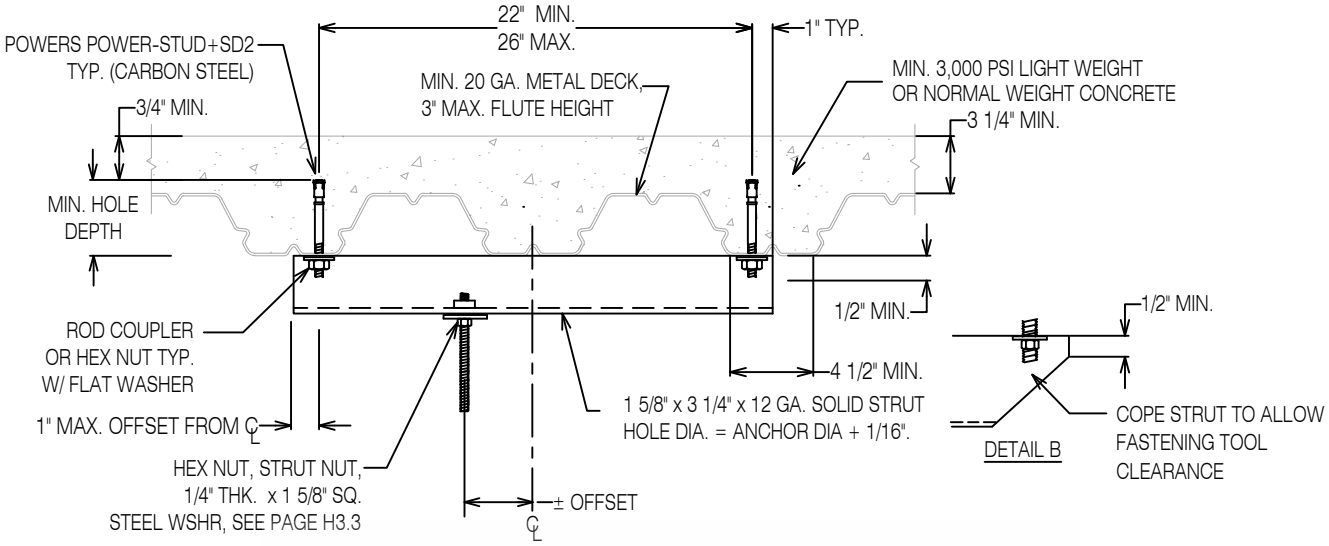

Seismically Qualified For Anchorage In Cracked Concrete
Seismic Design Categories D, E and F
Powers Power-Stud+ SD2 Concrete Expansion Anchor, Minimum 3000 psi LWC
ICC Report No. ESR-2502 (Dated May 2018), Table 1, Table 5 and Fig. 5A.

Anchor Diameter Inch	Two Anchor Connection Tension Design Value Lbs. [2] Vertical Support Rod Max. Offset From C.L.							Minimum Hole Depth Inch	Minimum Effective Embed. [1] Inch	Installation Torque Ft-Lbs.	Minimum Edge Distance Inch	Minimum Anchor Spacing Inch
	CL ± 0"	CL ± 1"	CL ± 2"	CL ± 4"	CL ± 6"	CL ± 8"	CL ± 10"					
3/8	1,097	1,006	928	805	710	635	575	2 5/8	2	20	4 1/2	6
1/2	1,112	1,020	941	816	720	644	583	2 3/4	2	40	4 1/2	6
1/2	1,974	1,810	1,671	1,448	1,278	1,143	1,034	4	3 1/4	40	7 1/2	9 3/4
5/8[4]	2,383	2,397	2,440	2,632	2,562	2,293	2,074	5 1/4	4 1/4	60	8 3/4	12 3/4

1. MINIMUM EFFECTIVE EMBEDMENT IS AFTER THE ANCHOR HAS BEEN SET.
2. CONNECTION DESIGN VALUE MAY BE LIMITED BY ROD STRENGTH, PAGE H1, OR STRUT NUT PULL OUT STRENGTH, PAGE H3.3.
3. REFER TO DETAIL G6.1SD2 FOR MINIMUM CONCRETE THICKNESS ABOVE TOP FLUTE.
4. USE DETAIL B.
5. ROD LOCATIONS WITH SINGLE, RIGID BRACE CONNECTIONS REQUIRE ADDITIONAL SEISMIC LOAD CONSIDERATIONS BEFORE APPLYING THE ABOVE VALUES. REFER TO PROJECT SPECIFIC ISAT BRACING LEGEND. THIS LOAD INCREASE DOES NOT APPLY TO CABLE BRACES OR WHERE TWO RIGID BRACES CONNECTED TO A COMMON ROD ARE INSTALLED IN OPPOSING DIRECTIONS.
6. LOAD VALUES SHOWN ARE ALLOWABLE STRESS DESIGN (ASD). CAPACITIES DERIVED IN CONFORMANCE WITH ASCE 7-10, PIN 62 & ACI 318-11, Appendix D.

REVIEWED FOR CODE COMPLIANCE BY OPM-0403 ICC-ES
BY: William Staehlin
EXPIRATION DATE: 01/26/2024
CALIFORNIA BUILDING CODE 2019

DUAL POWERS POWER-STUD +SD2
WITH 1 5/8" x 3 1/4" LONG SPAN STRUT
VERTICAL SUPPORT CONNECTION TO METAL DECK W/CONCRETE

REGISTERED PROFESSIONAL ENGINEER
MARCIN WASAZNIK
S 6612
STRUCTURAL
STATE OF CALIFORNIA

ISAT
A Division of Tomarco Contractor Specialties

International Seismic Application Technology
14848 Northam Street, La Mirada, CA 90638
877-999-4728 (Toll Free) 714-523-0845 (fax)
www.isatsb.com

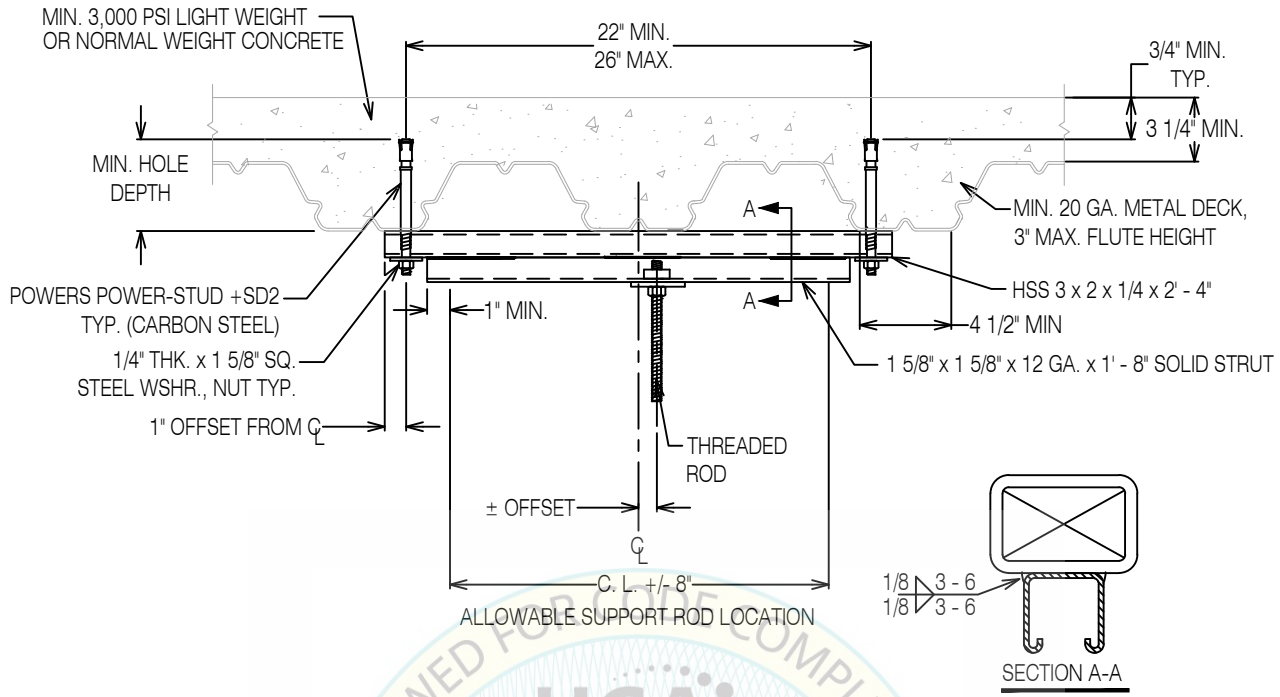

REVIEWED FOR CODE COMPLIANCE
HCAi
OPM-0403
By William Staehlin
ICC-ES AC193-2020
2020 CBC
CBC 1704.13.1 BUILDING

Seismically Qualified For Anchorage In Cracked Concrete
Seismic Design Categories D, E and F
Powers Power-Stud+ SD2 Concrete Expansion Anchor, Minimum 3000 psi LWC
ICC Report No. ESR-2502 (Dated May 2018), Table 1, Table 5 and Fig. 5A.

Anchor Diameter Inch	Two Anchor Connection Tension Design Value Lbs. [2,3] Vertical Support Rod Max. Offset From C.L.							Minimum Hole Depth Inch	Minimum Effective Embed. [1] Inch	Installation Torque Ft-Lbs.	Minimum Edge Distance Inch	Minimum Anchor Spacing Inch
	CL ± 0"	CL ± 1"	CL ± 2"	CL ± 4"	CL ± 6"	CL ± 8"	CL ± 10"					
5/8	3,250	3,250	3,250	2,904	2,562	2,293	2,074	5 1/4	4 1/4	60	8 3/4	12 3/4

1. MINIMUM EFFECTIVE EMBEDMENT IS AFTER THE ANCHOR HAS BEEN SET.
2. CONNECTION DESIGN VALUE MAY BE LIMITED BY ROD STRENGTH, PAGE H1, OR STRUT NUT PULL OUT STRENGTH, PAGE H3.3.
3. ROD LOCATIONS WITH SINGLE, RIGID BRACE CONNECTIONS REQUIRE ADDITIONAL SEISMIC LOAD CONSIDERATIONS BEFORE APPLYING THE ABOVE VALUES. REFER TO PROJECT SPECIFIC ISAT BRACING LEGEND. THIS LOAD INCREASE DOES NOT APPLY TO CABLE BRACES OR WHERE TWO RIGID BRACES CONNECTED TO A COMMON ROD ARE INSTALLED IN OPPOSING DIRECTIONS.
4. LOAD VALUES SHOWN ARE ALLOWABLE STRESS DESIGN (ASD). CAPACITIES DERIVED IN CONFORMANCE WITH ASCE 7-10, PIN 62 & ACI 318-11, Appendix D.
5. REFER TO DETAIL G6.1SD2 FOR MINIMUM CONCRETE THICKNESS ABOVE TOP FLUTE.

DUAL POWERS POWER-STUD +SD2 ANCHOR WITH HSS BEAM VERTICAL SUPPORT CONNECTION TO METAL DECK W/CONCRETE

REGISTERED PROFESSIONAL ENGINEER
MARCIN WASAZNIK
S 6612
STRUCTURAL
STATE OF CALIFORNIA

ISAT
A Division of Tomarco Contractor Specialties
International Seismic Application Technology
14848 Northam Street, La Mirada, CA 90638
877-999-4728 (Toll Free) 714-523-0845 (fax)
www.isatsb.com

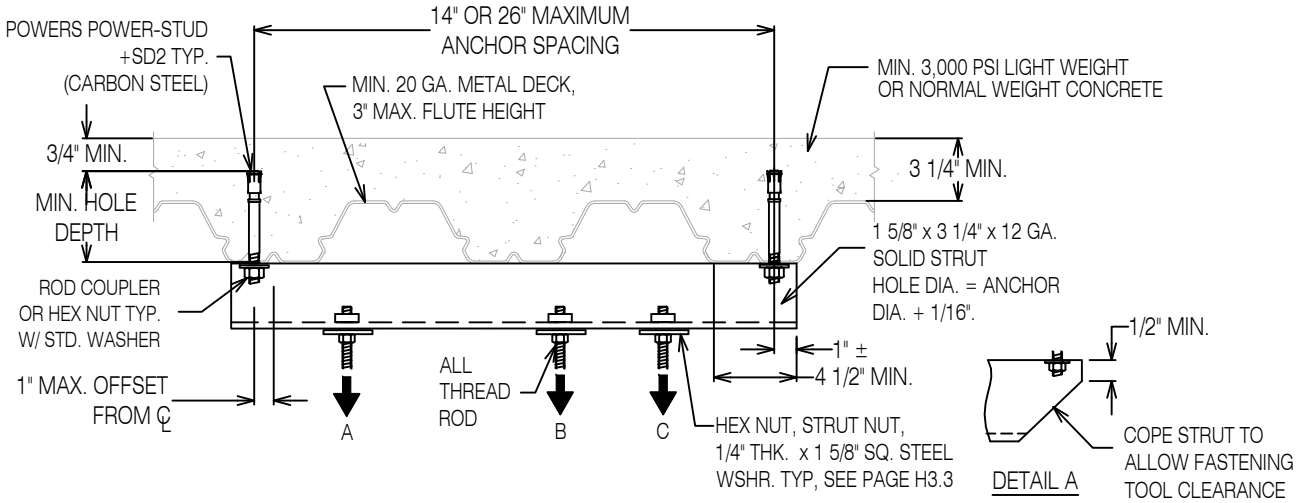

Seismically Qualified For Anchorage In Cracked Concrete
Seismic Design Categories D, E and F
Powers Power-Stud+ SD2 Concrete Expansion Anchor, Minimum 3000 psi LWC
ICC Report No. ESR-2502 (Dated May 2017), Table 1, Table 5 and Fig. 5A.

Anchor Diameter Inch	Tension Value [2, 3] 14" Spacing Lbs	Tension Value [2, 3] 26" Spacing Lbs	Minimum Hole Depth Inch	Minimum Effective Embed. [1] Inch	Installation Torque Ft - Lbs	Minimum Edge Distance Inch	Minimum Spacing Inch
3/8	591	571	2 5/8	2	20	4 1/2	6
1/2	599	578	2 3/4	2	40	4 1/2	6
1/2	1,063	1,027	4	3 1/4	40	7 1/2	9 3/4
5/8[4]	2,132	1,906	5 1/4	4 1/4	60	8 3/4	12 3/4

LOADING NOTES: SEE CHART FOR MAX ALLOWABLE LOAD. ANY NUMBER OF VERTICAL SUPPORT RODS MAY BE ATTACHED TO ABOVE ANCHORAGE, AT ANY LOCATION INBOARD OF ANCHORS.

MAXIMUM LOADING EXAMPLES:

a. MULTIPLE VERTICAL SUPPORTS @ LOCATIONS 'A', 'B' & 'C' W/ 3/8-INCH SD2 ANCHORS MAX TOTAL LOAD (A+B+C) = 527 LBS. WITH 14-INCH ANCHOR SPACING.

b. SINGLE VERTICAL SUPPORT @ ANY LOCATION W/ 1/2-INCH X 4-INCH HOLE DEPTH SD2 ANCHORS MAXIMUM LOAD = 917 LBS. WITH 26-INCH ANCHOR SPACING.

NOTES:

1. MINIMUM EFFECTIVE EMBEDMENT IS AFTER THE ANCHOR HAS BEEN SET.
2. ANCHOR ASSEMBLY MAY BE INSTALLED PARALLEL TO DECK FLUTE.
3. TENSION DESIGN VALUE MAY BE LIMITED BY ROD STRENGTH, PAGE H1 OR STRUT NUT PULL-OUT STRENGTH, PAGE H3.3.
4. USE DETAIL A.
5. ROD LOCATIONS WITH SINGLE, RIGID BRACE CONNECTIONS REQUIRE ADDITIONAL SEISMIC LOAD CONSIDERATIONS BEFORE APPLYING THE ABOVE VALUES. REFER TO PROJECT SPECIFIC ISAT BRACING LEGEND. THIS LOAD INCREASE DOES NOT APPLY TO CABLE BRACES OR WHERE TWO RIGID BRACES ARE INSTALLED AT THE SAME LOCATION IN OPPOSING DIRECTIONS.
6. LOAD VALUES SHOWN ARE ALLOWABLE STRESS DESIGN (ASD). CAPACITIES DERIVED IN CONFORMANCE WITH ASCE 7-10, PIN 62 & ACI 318-11, Appendix D.
7. REFER TO DETAIL G6.1SD2 FOR MINIMUM CONCRETE THICKNESS ABOVE TOP FLUTE.

DUAL POWERS POWER-STUD +SD2 MULTIPLE VERTICAL SUPPORT CONNECTION TO METAL DECK W/CONCRETE

REGISTERED PROFESSIONAL ENGINEER MARCIN WASAZNIK S 6612 STRUCTURAL STATE OF CALIFORNIA

ISAT
A Division of Tomarco Contractor Specialties
International Seismic Application Technology
14848 Northam Street, La Mirada, CA 90638
877-999-4728 (Toll Free) 714-523-0845 (fax)
www.isatsb.com

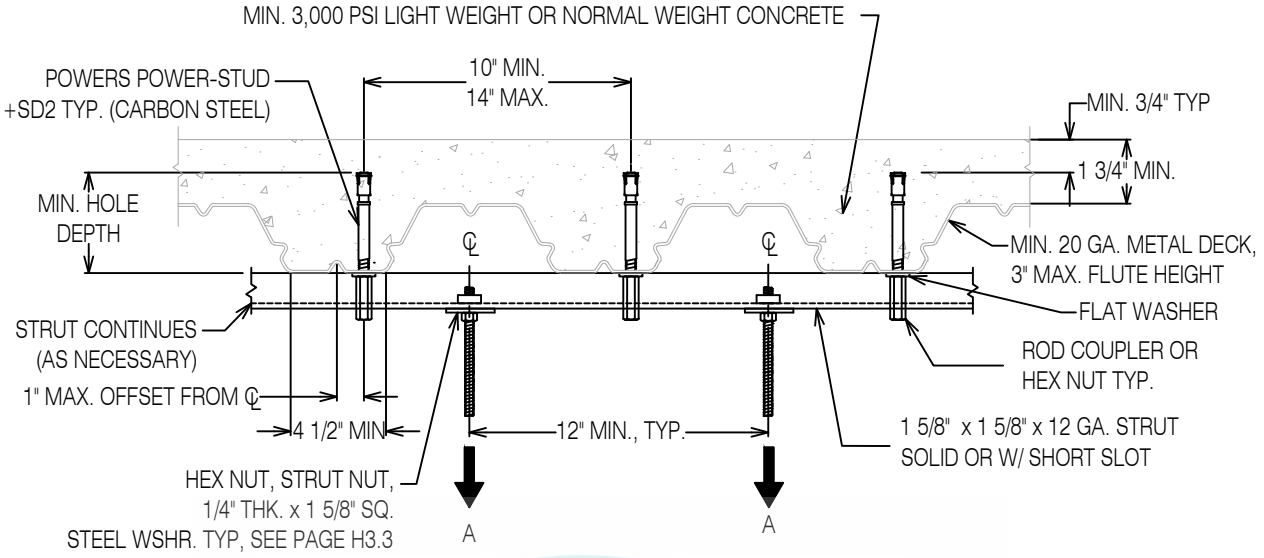

REVIEWED FOR CODE COMPLIANCE
HCAi
OPM-0403
By: William Staehlin
DATE: 01-26-2024
CALIFORNIA BUILDING CODE 2022

Seismically Qualified For Anchorage In Cracked Concrete
Seismic Design Categories D, E and F
Powers Power-Stud+ SD2 Concrete Expansion Anchor, Minimum 3000 psi LWC
ICC Report No. ESR-2502 (Dated May 2017), Table 1, Table 5 and Fig. 5A.

Anchor Diameter Inch	Tension Design Value Lbs.	Minimum Hole Depth Inch	Minimum Effective Embed.[1] Inch	Installation Torque Ft-Lbs.	Minimum Edge Distance Inch	Minimum Anchor Spacing Inch
3/8	399	2 5/8	2	20	4 1/2	6
1/2	405	2 3/4	2	40	4 1/2	6
1/2	718	4	3 1/4	40	7 1/2	9 3/4
5/8	1440	5 1/4	4 1/4	60	8 3/4	12 3/4

1. MINIMUM EFFECTIVE EMBEDMENT IS AFTER THE ANCHOR HAS BEEN SET.
2. ROD LOCATIONS WITH SINGLE, RIGID BRACE CONNECTIONS REQUIRE ADDITIONAL SEISMIC LOAD CONSIDERATIONS BEFORE APPLYING THE ABOVE VALUES. REFER TO ISAT BRACING LEGEND. THIS LOAD INCREASE DOES NOT APPLY TO CABLE BRACES OR WHERE TWO RIGID BRACES CONNECTED TO A COMMON ROD ARE INSTALLED IN OPPOSING DIRECTIONS.
3. LOAD VALUES SHOWN ARE ALLOWABLE STRESS DESIGN (ASD). CAPACITIES DERIVED IN CONFORMANCE WITH ASCE 7-10, PIN 62 & ACI 318-11, Appendix D.
4. REFER TO DETAIL G6.1SD2 FOR MINIMUM CONCRETE THICKNESS ABOVE TOP FLUTE.

MULTIPLE POWERS POWER-STUD +SD2 ANCHOR VERTICAL SUPPORT CONNECTION TO METAL DECK W/CONCRETE

REGISTERED PROFESSIONAL ENGINEER MARCIN WASAZNIK S-6612 STRUCTURAL STATE OF CALIFORNIA

ISAT
A Division of Tomarco Contractor Specialties
International Seismic Application Technology
14848 Northam Street, La Mirada, CA 90638
877-999-4728 (Toll Free) 714-523-0845 (fax)
www.isatsb.com

Rev. 7
06/18/18

Page
G6.7SD2

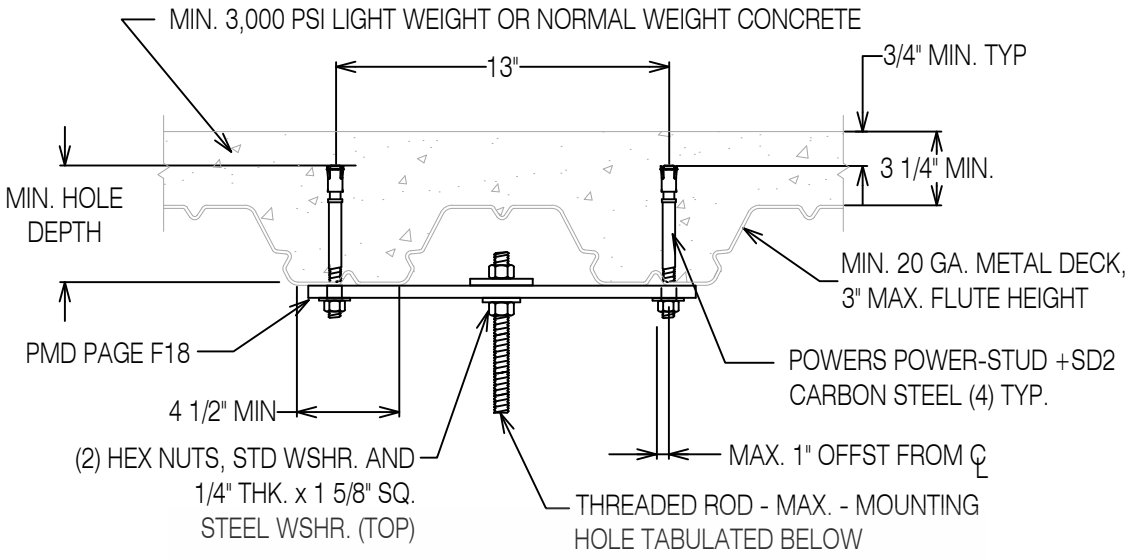

REVIEWED FOR CODE COMPLIANCE
OPM-0403
BY: William Staehlin
DATE: 01-26-2024
CALIFORNIA BUILDING CODE, 2022

Seismically Qualified For Anchorage In Cracked Concrete
Seismic Design Categories D, E and F
Powers Power-Stud+ SD2 Concrete Expansion Anchor, Minimum 3000 psi LWC
ICC Report No. ESR-2502 (Dated May 2017), Table 1, Table 5 and Fig. 5A.

Anchor Diameter Inch	Maximum Vertical Load Lbs.	Minimum Hole Depth Inch	Minimum Effective Embed.[1] Inch	Installation Torque Ft-Lbs.	Minimum Edge Distance Inch	Minimum Anchor Spacing Inch	Plate Number Page F18	Maximum Rod Diameter Inch
3/8	1,460	2 5/8	2	20	4 1/2	6	G634	1/2
1/2	2,225	2 3/4	2	40	4 1/2	6	G645	5/8
1/2	3,500	4	3 1/4	40	7 1/2	9 3/4	G646	3/4
5/8	4,452	5 1/4	4 1/4	60	8 3/4	12 3/4	G657	7/8

1. MINIMUM EFFECTIVE EMBEDMENT IS AFTER THE ANCHOR HAS BEEN SET.
2. ROD LOCATIONS WITH SINGLE, RIGID BRACE CONNECTIONS REQUIRE ADDITIONAL SEISMIC LOAD CONSIDERATIONS BEFORE APPLYING THE ABOVE VALUES. REFER TO ISAT BRACING LEGEND. THIS LOAD INCREASE DOES NOT APPLY TO CABLE BRACES OR WHERE TWO RIGID BRACES CONNECTED TO A COMMON ROD ARE INSTALLED IN OPPOSING DIRECTIONS.
3. LOAD VALUES SHOWN ARE ALLOWABLE STRESS DESIGN (ASD). CAPACITIES DERIVED IN CONFORMANCE WITH ASCE 7-10, PIN 62 & ACI 318-11, Appendix D.
4. REFER TO DETAIL G6.1SD2 FOR MINIMUM CONCRETE THICKNESS ABOVE TOP FLUTE.

4-ANCHOR POWERS POWER-STUD +SD2
VERTICAL SUPPORT CONNECTION TO METAL DECK W/CONCRETE

REGISTERED PROFESSIONAL ENGINEER MARCIN WASAZNIK S 6612 STRUCTURAL STATE OF CALIFORNIA

ISAT
A Division of Tomarco Contractor Specialties

International Seismic Application Technology
14848 Northam Street, La Mirada, CA 90638
877-999-4728 (Toll Free) 714-523-0845 (fax)
www.isatsb.com

Rev. 7
06/18/18
Page
G6.8SD2

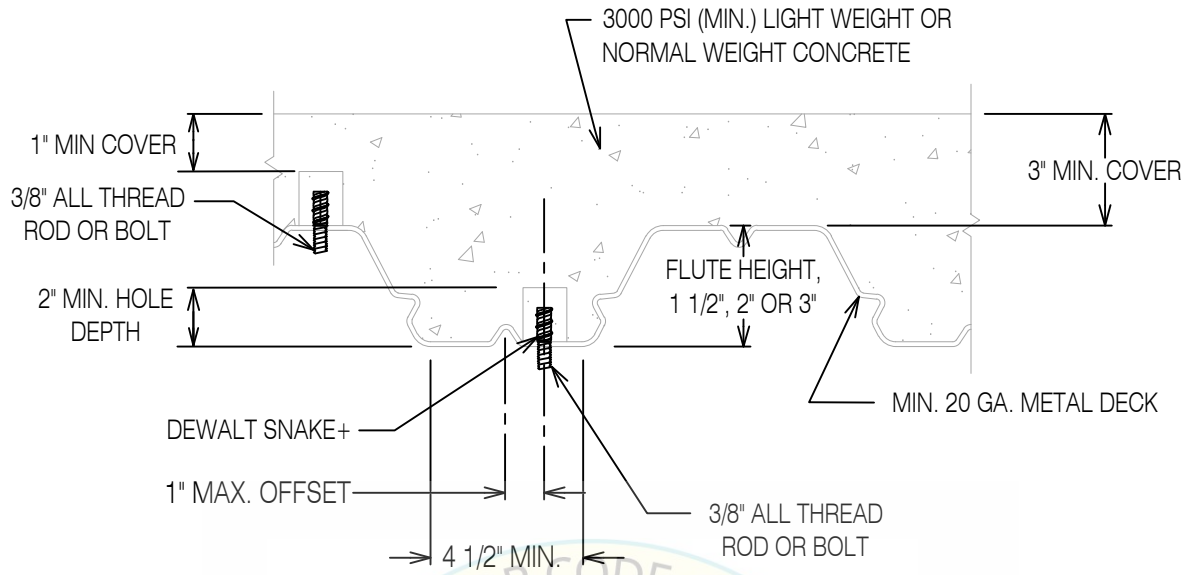

Single Anchor Vertical Support Connection Details
Metal Deck With Minimum 3,000 psi Light Weight or Normal Weight Concrete
Seismically Qualified For Anchorage In Cracked Concrete
Dewalt Snake+ Concrete Screw Anchor
ICC Report No. ESR-2272 (Dated Dec. 2022), Table 1 and Fig. 5.
Special Inspection Required By Manufacturer's ICC Report

Anchor Diameter	Tension Design Value	Minimum Hole Depth[1]	Minimum Effective Embedment[2]	Minimum Anchor Spacing	Critical Edge Distance	Screwdriver Installation Max. Torque	Rod or Bolt Installation Max. Torque	Min. Concrete Thickness Above Top Flute (Inch)		
								Metal Deck Flute Height		
Inch	Inch	Lbs.	Inch	Inch	Inch	Ft-Lbs.	Ft-Lbs.	1 1/2"	2"	3"
3/8	408	2	1 1/8	6 3/4	3	345	8	3	3	3

1. MINIMUM HOLE DEPTH TO BE VERIFIED BY INSPECTOR.
2. MINIMUM EFFECTIVE EMBEDMENT IS AFTER THE ANCHOR HAS BEEN SET.
3. ROD LOCATION WITH SINGLE, RIGID BRACE CONNECTIONS REQUIRE ADDITIONAL SEISMIC LOAD CONSIDERATIONS BEFORE APPLYING THE ABOVE VALUES. REFER TO THE PROJECT SPECIFIC ISAT BRACING LEGEND, OR C-SERIES PAGES. THIS LOAD INCREASE DOES NOT APPLY TO CABLE BRACES OR WHERE TWO RIGID BRACES CONNECTED TO A COMMON ROD ARE INSTALLED IN OPPOSING DIRECTIONS.

REVIEWED FOR CODE COMPLIANCE BY: William Staehlin DATE: 01-26-2024 CALIFORNIA BUILDING CODE 2022

SINGLE ANCHOR DEWALT SNAKE+
FOR SEISMIC BRACE CONNECTION IN METAL DECK SLAB

REGISTERED PROFESSIONAL ENGINEER MARCIN WASAZNIK S-6612 STRUCTURAL STATE OF CALIFORNIA

ISAT
A Division of Tomarco Contractor Specialties
International Seismic Application Technology
14848 Northam Street, La Mirada, CA 90638
877-999-4728 (Toll Free) 714-523-0845 (fax)
www.isatsb.com

Rev. 10
11/21/23
Page
G6.1SN

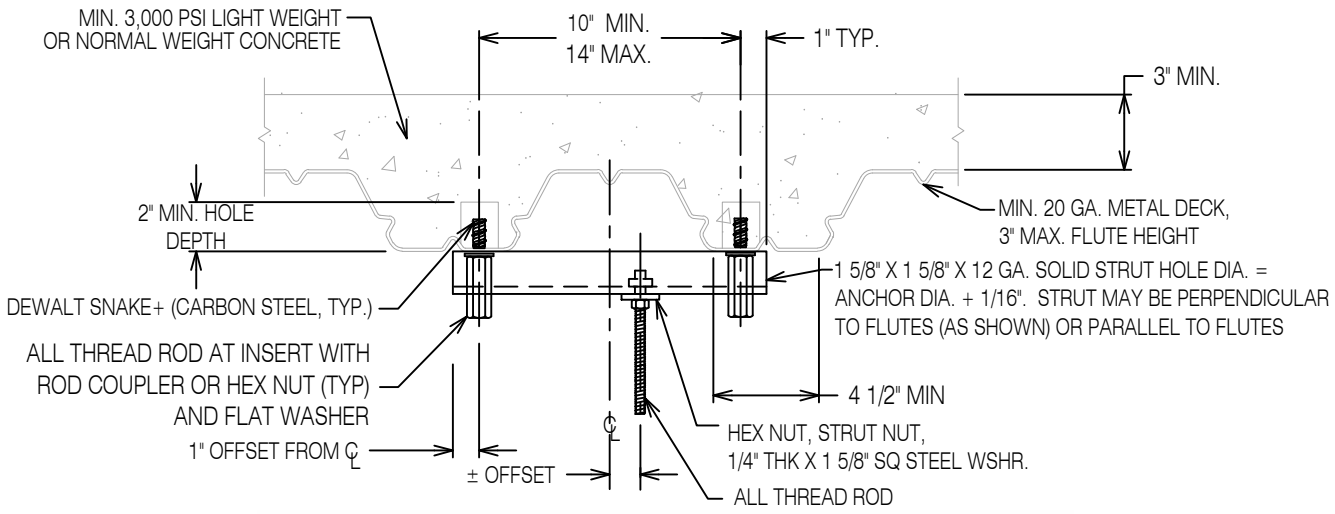

ALL COMPONENTRY FROM ISAT APPROVED MANUFACTURERS. SEE PAGE H3.3.

REVIEWED FOR CODE COMPLIANCE
HCAi
OPM-0403
BY: William Staehlin
DATE: 01-26-2024
CALIFORNIA BUILDING CODE, 2022

Metal Deck With Minimum 3000 psi Light Weight or Normal Weight Concrete
Seismically Qualified for Anchorage In Cracked Concrete
Dewalt Snake+ Concrete Screw Anchor
ICC Report No. ESR-2272 (Dated Dec. 2022), Table 1
Special Inspection Required by Manufacturer's ICC Report

Anchor Diameter Inch	Minimum Hole Depth [1] Inch	Minimum Effective Embedment [2] Inch	Minimum Concrete Thickness Inch	Screwdriver Installation Max. Torque Ft-Lbs.	Rod or Bolt Installation Max. Torque Ft-Lbs.	Minimum Anchor Spacing Inch	Minimum Edge Distance Inch	Two Anchor Connection Tension Design Value Lbs. Vertical Support Rod Max. Offset From C.L.				
								CL ± 0"	CL ± 1"	CL ± 2"	CL ± 3"	CL ± 4"
3/8	2	1 1/8	4	345	8	6 3/4	3	816	680	583	510	454

1. MINIMUM HOLE DEPTH IS TO BE VERIFIED BY THE INSPECTOR.
2. MINIMUM EFFECTIVE EMBEDMENT IS AFTER THE ANCHOR HAS BEEN SET.
3. ROD LOCATIONS WITH SINGLE, RIGID BRACE CONNECTIONS REQUIRE ADDITIONAL SEISMIC LOAD CONSIDERATIONS BEFORE APPLYING THE ABOVE VALUES. REFER TO PROJECT SPECIFIC ISAT BRACING LEGEND.
   THIS LOAD INCREASE DOES NOT APPLY TO CABLE BRACES OR WHERE TWO RIGID BRACES CONNECTED TO A COMMON ROD ARE INSTALLED IN OPPOSING DIRECTIONS.

DUAL DEWALT SNAKE+
VERTICAL SUPPORT CONNECTION

REGISTERED PROFESSIONAL ENGINEER
MARCIN WASAZNIK
S 6612
STRUCTURAL
STATE OF CALIFORNIA

ISAT
A Division of Tomarco Contractor Specialties
International Seismic Application Technology
14848 Northam Street, La Mirada, CA 90638
877-999-4728 (Toll Free) 714-523-0845 (fax)
www.isatsb.com

Rev. 10
11/21/23
Page
G6.2SN

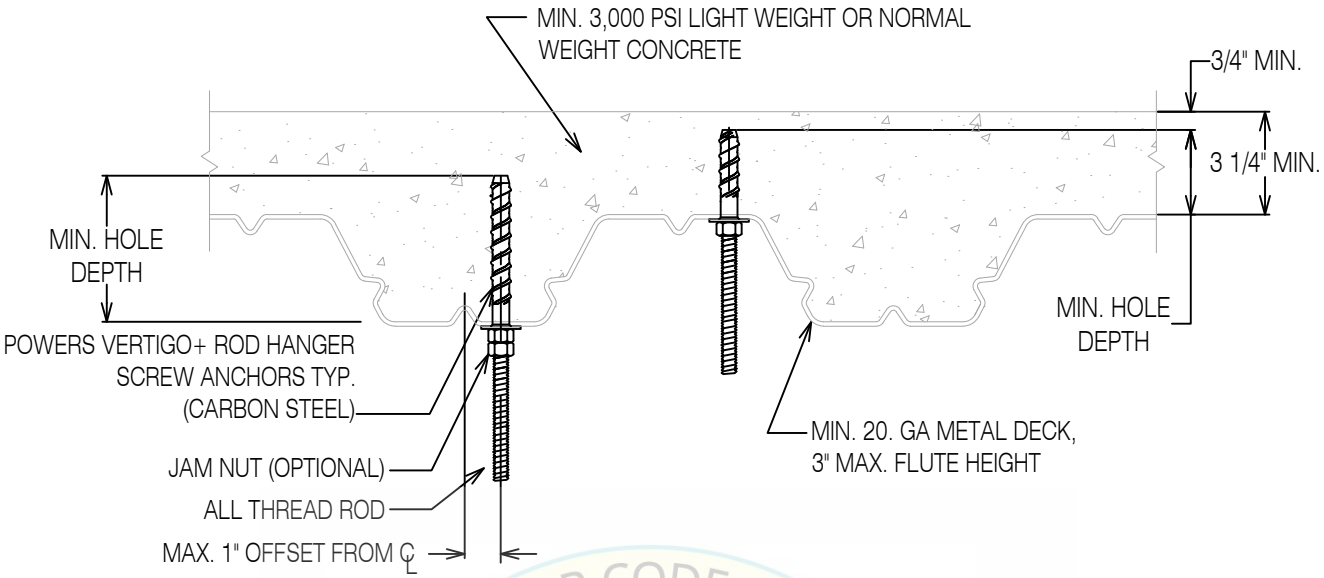

REVIEWED FOR CODE COMPLIANCE
HCAi
OPM-0403
By: William Staehlin
DATE: 01-26-2024
CALIFORNIA BUILDING CODE 2022

Seismically Qualified for Anchorage In Cracked Concrete
Seismic Design Categories D, E and F
Powers Vertigo+ Screw Anchor, Minimum 3000 psi LWC
ICC Report No. ESR-2526 (Dated June 2016), Table 4, 5 and 6

Anchor Diameter Inch	Design Tension 3 ksi Conc Lbs.	Minimum Hole Depth Inch	Minimum Effective Embed. Inch	Max. Impact Wrench Torque Ft-Lbs.	Minimum Edge Distance Inch	Minimum Anchor Spacing Inch	Min. Concrete Thickness Above Top Flute (Inch)3		
							Metal Deck Flute Height		
							1 1/2"	2"	3"
1/4	535	2 1/2	1.425	185	4 1/2	6 3/4	2 1/4	2 1/4	2 1/4
3/8	535	2 1/2	1.425	185	4 1/2	6 3/4	2 1/4	2 1/4	2 1/4
1/2	535	2 1/2	1.425	185	7 1/2	6 3/4	2 1/4	2 1/4	2 1/4

1. MINIMUM EFFECTIVE EMBEDMENT IS AFTER THE ANCHOR HAS BEEN SET.
2. ROD LOCATIONS WITH SINGLE, RIGID BRACE CONNECTIONS REQUIRE ADDITIONAL SEISMIC LOAD CONSIDERATIONS BEFORE APPLYING THE ABOVE VALUES. REFER TO PROJECT SPECIFIC ISAT BRACING LEGEND. THIS LOAD INCREASE DOES NOT APPLY TO CABLE BRACES OR WHERE TWO RIGID BRACES CONNECTED TO A COMMON ROD ARE INSTALLED IN OPPOSING DIRECTIONS.
3. BASED ON INSTALLATION IN LOW FLUTE.
4. LOAD VALUES SHOWN ARE ALLOWABLE STRESS DESIGN (ASD). CAPACITIES DERIVED IN CONFORMANCE WITH ASCE 7-10, PIN 62 & ACI 318-11, Appendix D.

SINGLE POWERS VERTIGO+ ROD HANGER SCREW ANCHOR
VERTICAL SUPPORT CONNECTION TO METAL DECK W/CONCRETE

REGISTERED PROFESSIONAL ENGINEER MARCIN WASAZNIK S 6612 STRUCTURAL STATE OF CALIFORNIA

ISAT
A Division of Tomarco Contractor Specialties

International Seismic Application Technology
14848 Northam Street, La Mirada, CA 90638
877-999-4728 (Toll Free) 714-523-0845 (fax)
www.isatsb.com

Rev. 7
06/18/18

Page
G6.1VRT3

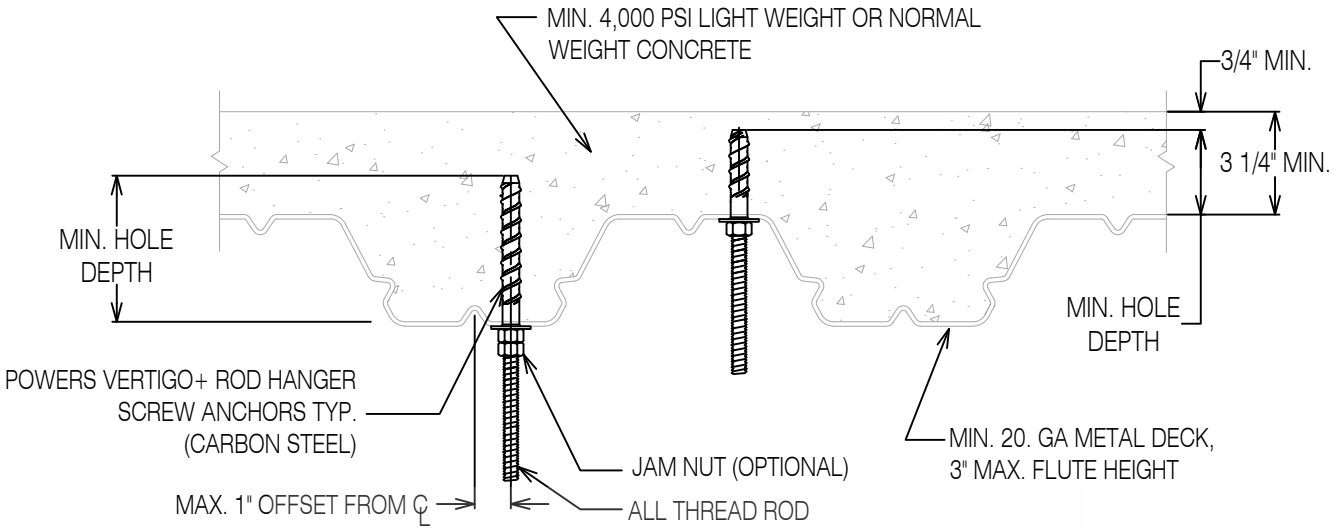

REVIEWED FOR CODE COMPLIANCE
HCAi
OPM-0403
Dr. William Staehlin
DATE: 01-26-2024
CALIFORNIA BUILDING CODE 2022

Seismically Qualified for Anchorage In Cracked Concrete
Seismic Design Categories D, E and F
Powers Vertigo+ Screw Anchor, Minimum 4000 psi LWC
ICC Report No. ESR-2526 (Dated June 2016), Table 4, 5 and 6

Anchor Diameter Inch	Design Tension 4 ksi Conc Lbs.	Minimum Hole Depth Inch	Minimum Effective Embed. Inch	Max. Impact Wrench Torque Ft-Lbs.	Minimum Edge Distance Inch	Minimum Anchor Spacing Inch	Min. Concrete Thickness Above Top Flute (Inch)[3] Metal Deck Flute Height		
							1 1/2"	2"	3"
1/4	618	2 1/2	1.425	185	4 1/2	6 3/4	2 1/4	2 1/4	2 1/4
3/8	618	2 1/2	1.425	185	4 1/2	6 3/4	2 1/4	2 1/4	2 1/4
1/2	618	2 1/2	1.425	185	7 1/2	6 3/4	2 1/4	2 1/4	2 1/4

1. MINIMUM EFFECTIVE EMBEDMENT IS AFTER THE ANCHOR HAS BEEN SET.
2. ROD LOCATIONS WITH SINGLE, RIGID BRACE CONNECTIONS REQUIRE ADDITIONAL SEISMIC LOAD CONSIDERATIONS BEFORE APPLYING THE ABOVE VALUES. REFER TO PROJECT SPECIFIC ISAT BRACING LEGEND. THIS LOAD INCREASE DOES NOT APPLY TO CABLE BRACES OR WHERE TWO RIGID BRACES CONNECTED TO A COMMON ROD ARE INSTALLED IN OPPOSING DIRECTIONS.
3. BASED ON INSTALLATION IN LOW FLUTE.
4. LOAD VALUES SHOWN ARE ALLOWABLE STRESS DESIGN (ASD). CAPACITIES DERIVED IN CONFORMANCE WITH ASCE 7-10, PIN 62 & ACI 318-11, Appendix D.

SINGLE POWERS VERTIGO+ ROD HANGER SCREW ANCHOR VERTICAL SUPPORT CONNECTION TO METAL DECK W/CONCRETE

REGISTERED PROFESSIONAL ENGINEER MARCIN WASAZNIK S 6612 STRUCTURAL STATE OF CALIFORNIA

ISAT
A Division of Tomarco Contractor Specialties

International Seismic Application Technology
14848 Northam Street, La Mirada, CA 90638
877-999-4728 (Toll Free) 714-523-0845 (fax)
www.isatsb.com

Rev. 7
06/19/18
Page
G6.1VRT4

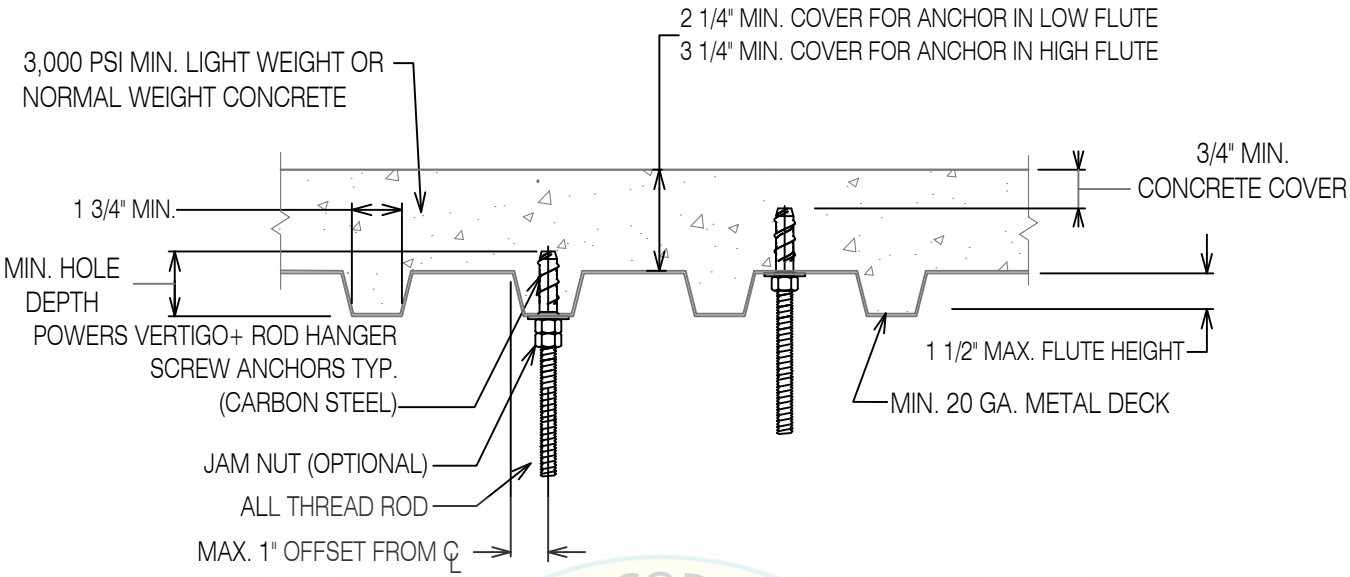

Seismically Qualified for Anchorage In Cracked Concrete
Seismic Design Categories D, E and F
Powers Vertigo+ Screw Anchor, Minimum 3000 psi LWC
ICC Report No. ESR-2526 (Dated June 2016), Table 4, 5 and 6

Anchor Diameter Inch	Design Tension 3 ksi Conc Lbs.	Minimum Hole Depth Inch	Minimum Effective Embed. Inch	Max. Impact Wrench Torque Ft-Lbs.	Minimum Edge Distance Inch	Minimum Anchor Spacing Inch	Min. Concrete Thickness [5] Metal Deck Flute Height 1 1/2"
1/4	513	2 1/2	1.425	185	1 1/2	4.275	2 1/4
3/8	535	2 1/2	1.425	185	1 1/2	4.275	2 1/4
1/2	535	2 1/2	1.425	185	1 1/2	4.275	2 1/4

1. MINIMUM EFFECTIVE EMBEDMENT IS AFTER THE ANCHOR HAS BEEN SET.
2. ROD LOCATIONS WITH SINGLE, RIGID BRACE CONNECTIONS REQUIRE ADDITIONAL SEISMIC LOAD CONSIDERATIONS BEFORE APPLYING THE ABOVE VALUES. REFER TO PROJECT SPECIFIC ISAT BRACING LEGEND. THIS LOAD INCREASE DOES NOT APPLY TO CABLE BRACES OR W HERE TWO RIGID BRACES CONNECTED TO A COMMON ROD ARE INSTALLED IN OPPOSING DIRECTIONS.
3. LOAD VALUES SHOWN ARE ALLOWABLE STRESS DESIGN (ASD). CAPACITIES DERIVED IN CONFORMANCE WITH ASCE 7-10, PIN 62 & ACI 318-11, Appendix D.
4. BASED ON INSTALLATION IN LOWER FLUTE.

SINGLE POWERS VERTIGO+ ROD HANGER SCREW ANCHOR VERTICAL SUPPORT CONNECTION TO B DECK W/CONCRETE

REGISTERED PROFESSIONAL ENGINEER MARCIN WASAZNIK S 6612 STRUCTURAL STATE OF CALIFORNIA

ISAT
A Division of Tomarco Contractor Specialties
International Seismic Application Technology
14848 Northam Street, La Mirada, CA 90638
877-999-4728 (Toll Free) 714-523-0845 (fax)
www.isatsb.com

Rev. 7
06/18/18

Page
G6.1VRTB

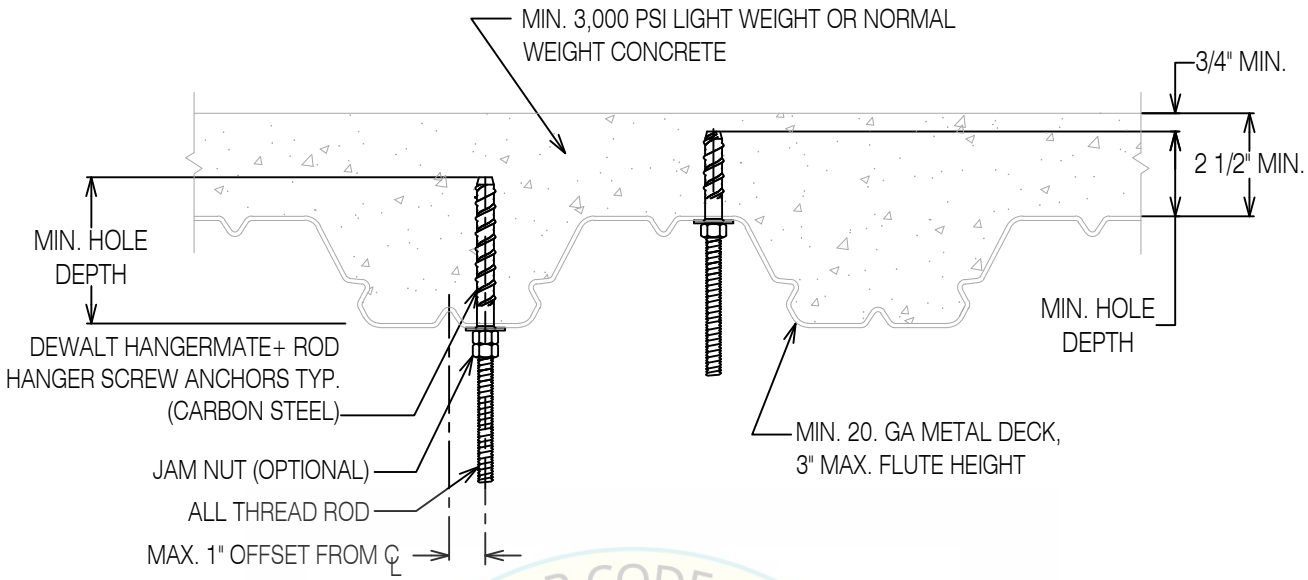

Dewalt Hangermate+ Screw Anchor, Minimum 3000 psi NWC
Seismically Qualified For Anchorage In Cracked Concrete
Seismic Design Categories D, E, and F
ICC. Report No. ESR-3889 (Dated November 2022), Table 1B, 4

Anchor Diameter	Internal Thread Diameter	Design Tension Value[2,4]	Minimum Hole Depth	Minimum Effective Embed[1]	Max. Impact Wrench Torque	Maximum Installation Torque	Minimum Edge Distance	Minimum Anchor Spacing	Minimum Concrete Thickness Above Top Flute (Inch)[3] Metal Deck Flute Height		
Inch	Lbs.		Inch	Inch	Ft-Lbs.	Inch	Inch	Inch	1 1/2"	2"	3"
1/4	1/4	110	2	1.200	150	19	4 1/2	6 3/4	2 1/2	2 1/2	2 1/2
3/8	3/8	110	2	1.200	150	19	4 1/2	6 3/4	2 1/2	2 1/2	2 1/2
3/8	1/2	285	2 7/8	1.940	150	25	7 1/2	6 3/4	2 1/2	2 1/2	2 1/2

1. MINIMUM EFFECTIVE EMBEDMENT IS AFTER THE ANCHOR HAS BEEN SET.
2. ROD LOCATION WITH SINGLE, RIGID BRACE CONNECTIONS REQUIRE ADDITIONAL SEISMIC LOAD CONSIDERATIONS BEFORE APPLYING THE ABOVE VALUES. REFER TO THE PROJECT SPECIFIC ISAT BRACING LEGEND, OR C-SERIES PAGES. THIS LOAD INCREASE DOES NOT APPLY TO CABLE BRACES OR WHERE TWO RIGID BRACES CONNECTED TO A COMMON ROD ARE INSTALLED IN OPPOSING DIRECTIONS.
3. BASED ON INSTALLATION IN LOW FLUTE.
4. LOAD VALUES SHOWN ARE ALLOWABLE STRESS DESIGN (ASD). CAPACITIES DERIVED IN CONFORMANCE WITH ASCE 7-16 AND ACI 318.

REVIEWED FOR CODE COMPLIANCE
OPM-0403
BY: William Staehlin
DATE: 01-26-2024
CALIFORNIA BUILDING CODE, 2022

SINGLE DEWALT HANGERMATE+ ROD HANGER SCREW ANCHOR VERTICAL SUPPORT CONNECTION TO METAL DECK W/CONCRETE

REGISTERED PROFESSIONAL ENGINEER MARCIN WASAZNIK S 6612 STRUCTURAL STATE OF CALIFORNIA

ISAT
A Division of Tomarco Contractor Specialties

International Seismic Application Technology
14848 Northam Street, La Mirada, CA 90638
877-999-4728 (Toll Free) 714-523-0845 (fax)
www.isatsb.com

Rev. 2
11/21/23
Page
G6.1HMT3

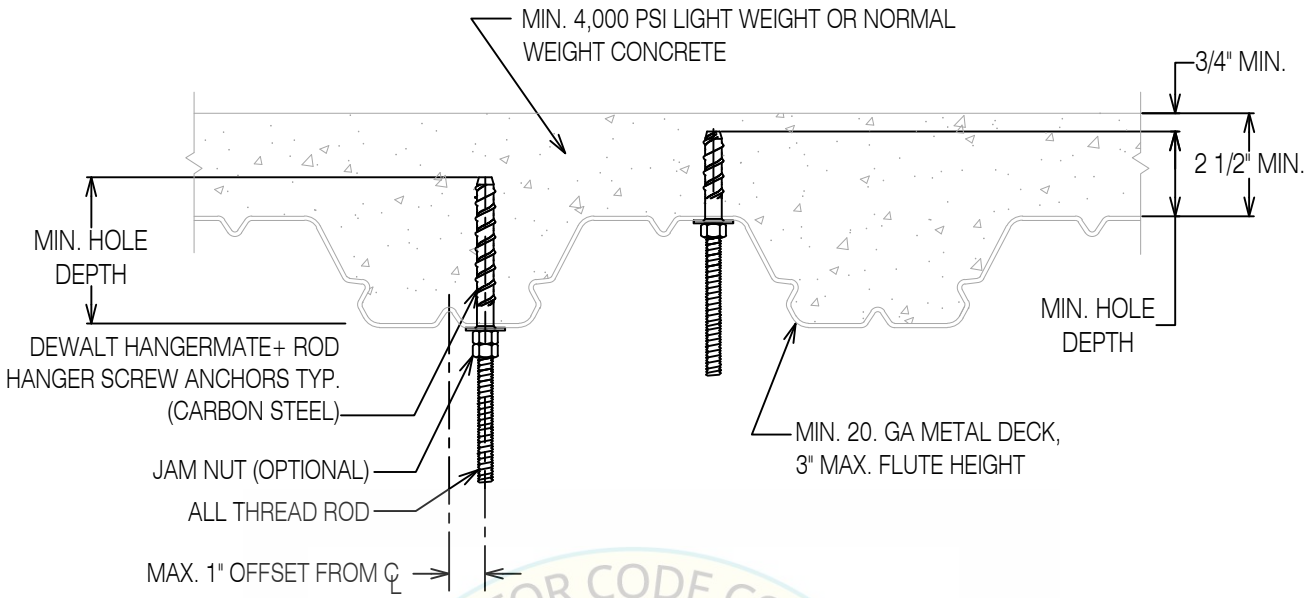

Dewalt Hangermate+ Screw Anchor, Minimum 4000 psi NWC
Seismically Qualified For Anchorage In Cracked Concrete
Seismic Design Categories D, E, and F
ICC. Report No. ESR-3889 (Dated November 2022), Table 1B, 4

Anchor Diameter	Internal Thread Diameter	Design Tension Value[2,4]	Minimum Hole Depth	Minimum Effective Embed[1]	Max. Impact Wrench Torque	Maximum Installation Torque	Minimum Edge Distance	Minimum Anchor Spacing	Minimum Concrete Thickness Above Top Flute (Inch)[3]		
									Metal Deck Flute Height		
Inch	Lbs.		Inch	Inch	Ft-Lbs.	Inch	Inch	Inch	1 1/2"	2"	3"
1/4	1/4	120	2	1.200	150	19	4 1/2	6 3/4	2 1/2	2 1/2	2 1/2
3/8	3/8	127	2	1.200	150	19	4 1/2	6 3/4	2 1/2	2 1/2	2 1/2
3/8	1/2	329	2 7/8	1.940	150	25	7 1/2	6 3/4	2 1/2	2 1/2	2 1/2

1. MINIMUM EFFECTIVE EMBEDMENT IS AFTER THE ANCHOR HAS BEEN SET.
2. ROD LOCATION WITH SINGLE, RIGID BRACE CONNECTIONS REQUIRE ADDITIONAL SEISMIC LOAD CONSIDERATIONS BEFORE APPLYING THE ABOVE VALUES. REFER TO THE PROJECT SPECIFIC ISAT BRACING LEGEND, OR C-SERIES PAGES. THIS LOAD INCREASE DOES NOT APPLY TO CABLE BRACES OR WHERE TWO RIGID BRACES CONNECTED TO A COMMON ROD ARE INSTALLED IN OPPOSING DIRECTIONS.
3. BASED ON INSTALLATION IN LOW FLUTE.
4. LOAD VALUES SHOWN ARE ALLOWABLE STRESS DESIGN (ASD). CAPACITIES DERIVED IN CONFORMANCE WITH ASCE 7-16 AND ACI 318.

REVIEWED FOR CODE COMPLIANCE
HCAi
OPM-0403
BY: William Staehlin
DATE: 01-26-2024
CALIFORNIA BUILDING CODE 2019

SINGLE DEWALT HANGERMATE+ ROD HANGER SCREW ANCHOR VERTICAL SUPPORT CONNECTION TO METAL DECK W/CONCRETE

REGISTERED PROFESSIONAL ENGINEER MARCIN WASAZNIK S-6612 STRUCTURAL STATE OF CALIFORNIA

ISAT
A Division of Tomarco Contractor Specialties
International Seismic Application Technology
14848 Northam Street, La Mirada, CA 90638
877-999-4728 (Toll Free) 714-523-0845 (fax)
www.isatsb.com

Rev. 2
11/21/23

Page
G6.1HMT4

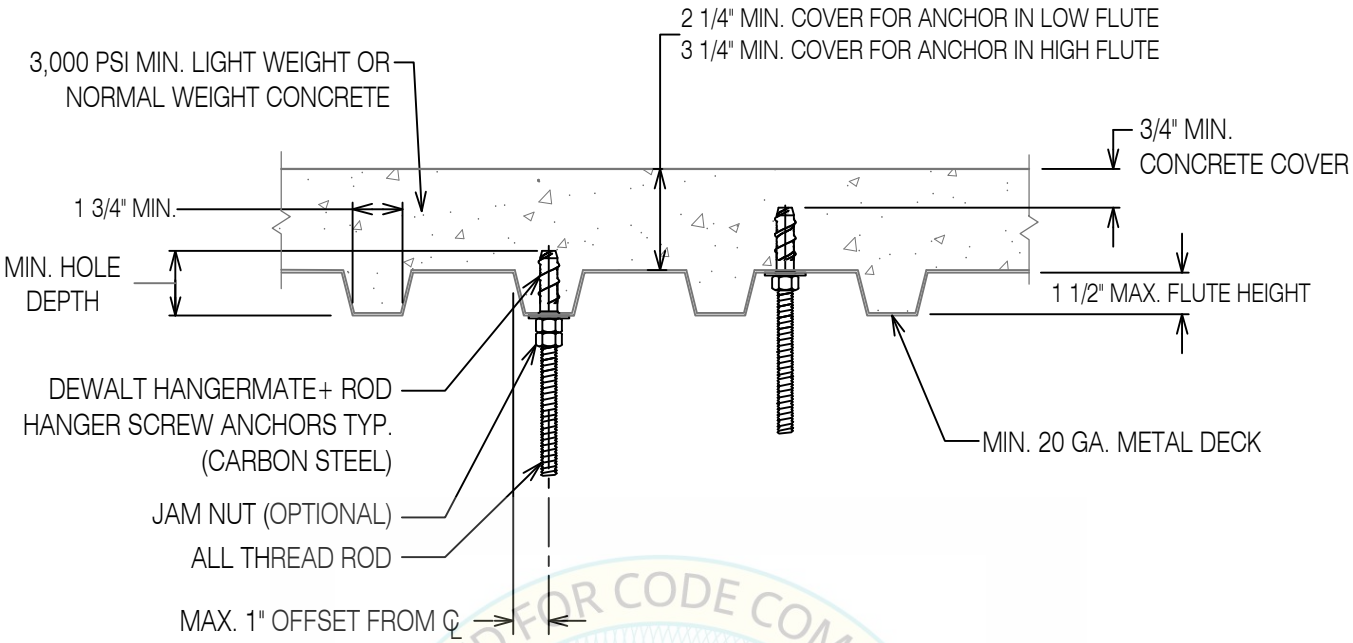

Dewalt Hangermate+ Screw Anchor, Minimum 3000 psi NWC
Seismically Qualified For Anchorage In Cracked Concrete
Seismic Design Categories D, E, and F
ICC. Report No. ESR-3889 (Dated November 2022), Table 1B, 4

Anchor Diameter	Internal Thread Diameter	Design Tension Value[2,4]	Minimum Hole Depth	Minimum Effective Embed[1]	Max. Impact Wrench Torque	Maximum Installation Torque	Minimum Edge Distance	Minimum Anchor Spacing	Min. Concrete Thickness[3] Metal Deck Flute Height
Inch	Lbs.		Inch	Inch	Ft-Lbs.	Inch	Inch	Inch	1 1/2"
1/4	1/4	110	2	1.200	150	19	4 1/2	3.60	2 1/2
3/8	3/8	110	2	1.200	150	19	4 1/2	3.60	2 1/2
3/8	1/2	285	2 7/8	1.940	150	25	7 1/2	5.82	2 1/2

1. MINIMUM EFFECTIVE EMBEDMENT IS AFTER THE ANCHOR HAS BEEN SET.
2. ROD LOCATION WITH SINGLE, RIGID BRACE CONNECTIONS REQUIRE ADDITIONAL SEISMIC LOAD CONSIDERATIONS BEFORE APPLYING THE ABOVE VALUES. REFER TO THE PROJECT SPECIFIC ISAT BRACING LEGEND, OR C-SERIES PAGES. THIS LOAD INCREASE DOES NOT APPLY TO CABLE BRACES OR WHERE TWO RIGID BRACES CONNECTED TO A COMMON ROD ARE INSTALLED IN OPPOSING DIRECTIONS.
3. BASED ON INSTALLATION IN LOW FLUTE.
4. LOAD VALUES SHOWN ARE ALLOWABLE STRESS DESIGN (ASD). CAPACITIES DERIVED IN CONFORMANCE WITH ASCE 7-16 AND ACI 318.

REVIEWED FOR CODE COMPLIANCE
HCAi
OPM-0403
BY: William Staehlin
DATE: 01-26-2024
CALIFORNIA BUILDING CODE 2022

SINGLE DEWALT HANGERMATE+ ROD HANGER SCREW ANCHOR VERTICAL SUPPORT CONNECTION TO B DECK W/CONCRETE

REGISTERED PROFESSIONAL ENGINEER MARCIN WASAZNIK S-6612 STRUCTURAL STATE OF CALIFORNIA

ISAT
A Division of Tomarco Contractor Specialties
International Seismic Application Technology
14848 Northam Street, La Mirada, CA 90638
877-999-4728 (Toll Free) 714-523-0845 (fax)
www.isatsb.com

Rev. 2
11/21/23
Page
G6.1HMTB

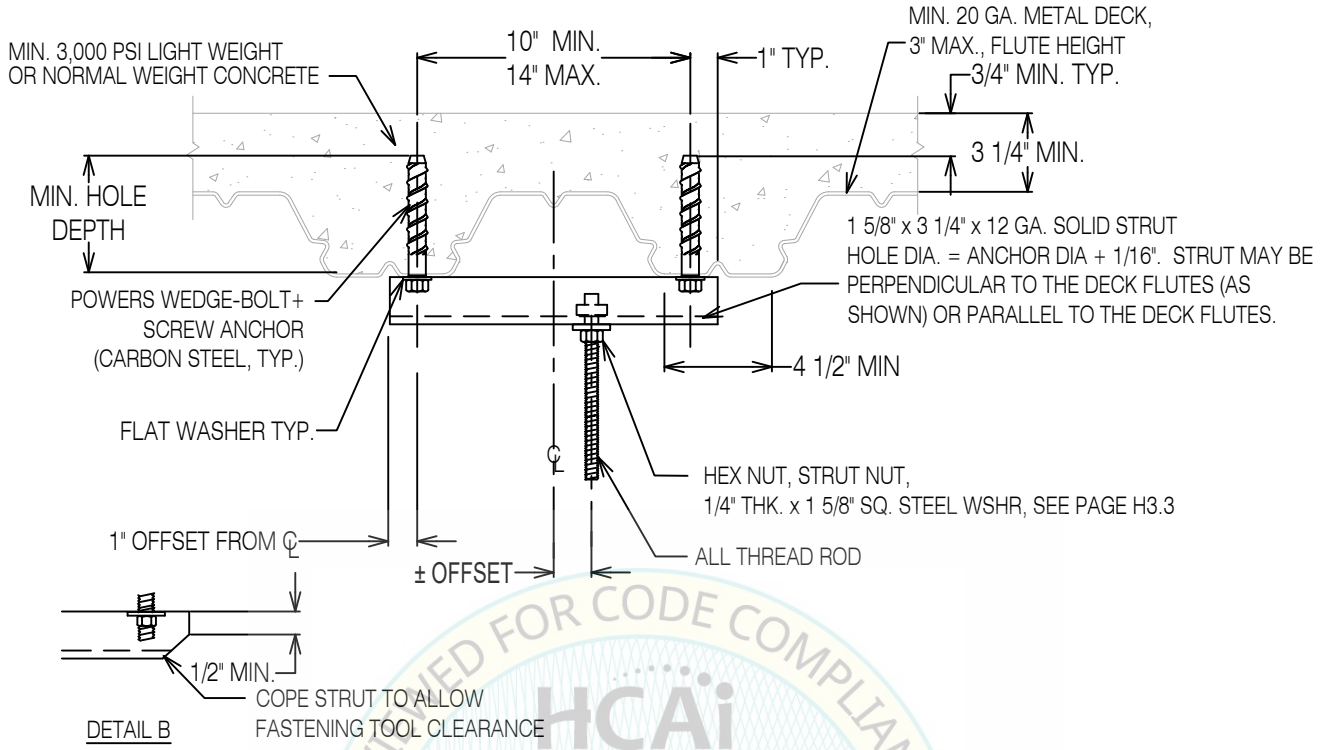

Seismically Qualified For Anchorage In Cracked Concrete
Seismic Design Categories D, E and F
Powers Wedge-Bolt+ Screw Anchor, Minimum 3000 psi LWC
ICC Report No. ESR-2526 (Dated June 2017), Table 1, 2 and 3, and Fig. 5

Anchor Diameter Inch	Two Anchor Connection Tension Design Value Lbs. [2] Vertical Support Rod Max. Offset From C.L.					Minimum Hole Depth Inch	Minimum Effective Embed. [1] Inch	Max. Impact Wrench Torque Ft-Lbs.	Minimum Edge Distance Inch	Minimum Anchor Spacing Inch
	CL ± 0"	CL ± 1"	CL ± 2"	CL ± 3"	CL ± 4"					
3/8	1,082	902	773	676	601	2 1/4	1.43	245	4 1/2	6.75
1/2	1,333	1,111	952	833	740	2 3/4	1.65	300	4 1/2	6.75
1/2	1,333	1,111	952	833	740	4	2.50	300	7 1/2	7.50
5/8[3]	1,426	1,455	1,446	1,265	1,124	5	3.10	350	8 3/4	9.30

1. MINIMUM EFFECTIVE EMBEDMENT IS AFTER THE ANCHOR HAS BEEN SET.
2. CONNECTION DESIGN VALUE MAY BE LIMITED BY ROD STRENGTH, PG. H1, OR STRUT NUT PULL OUT STRENGTH, PG. H3.3.
3. ROD LOCATIONS WITH SINGLE, RIGID BRACE CONNECTIONS REQUIRE ADDITIONAL SEISMIC LOAD CONSIDERATIONS BEFORE APPLYING THE ABOVE VALUES. REFER TO PROJECT SPECIFIC ISAT BRACING LEGEND. THIS LOAD INCREASE DOES NOT APPLY TO CABLE BRACES OR WHERE TWO RIGID BRACES CONNECTED TO A COMMON ROD ARE INSTALLED IN OPPOSING DIRECTIONS.
4. LOAD VALUES SHOWN ARE ALLOWABLE STRESS DESIGN (ASD). CAPACITIES DERIVED IN CONFORMANCE WITH ASCE 7-10, PIN 62 & ACI 318-11, Appendix D.
5. REFER TO DETAIL D2.1WB FOR MINIMUM CONCRETE THICKNESS ABOVE TOP FLUTE.

DUAL POWERS WEDGE-BOLT+ SCREW ANCHOR W/ 1 5/8" x 1 5/8" STRUT VERTICAL SUPPORT CONNECTION TO METAL DECK W/CONCRETE

REGISTERED PROFESSIONAL ENGINEER MARCIN WASAZNIK S-6612 STRUCTURAL STATE OF CALIFORNIA

ISAT
A Division of Tomarco Contractor Specialties
International Seismic Application Technology
14848 Northam Street, La Mirada, CA 90638
877-999-4728 (Toll Free) 714-523-0845 (fax)
www.isatsb.com

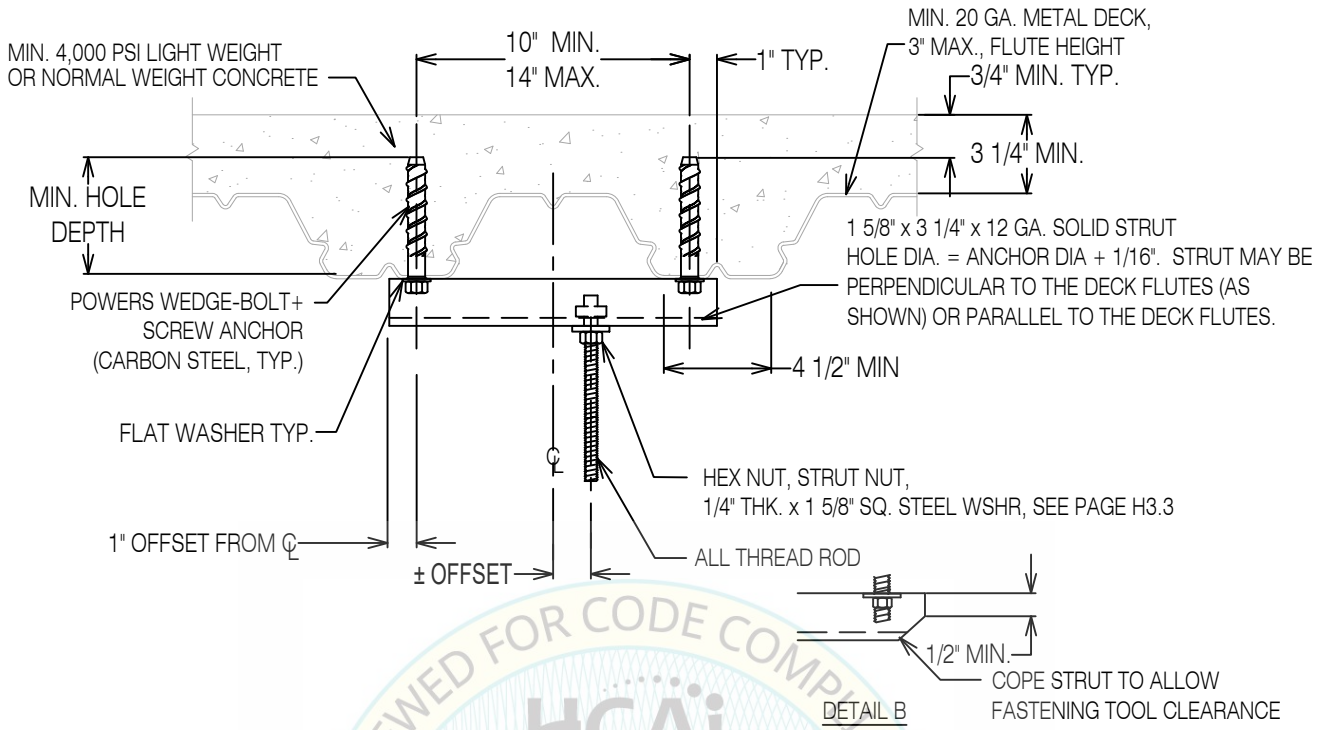

REVIEWED FOR CODE COMPLIANCE
HCAi
OPM-0403
DATE 01-26-2024
INTERNATIONAL CODE COUNCIL

Seismically Qualified For Anchorage In Cracked Concrete
Seismic Design Categories D, E and F
Powers Wedge-Bolt+ Screw Anchor, Minimum 4000 psi LWC
ICC Report No. ESR-2526 (Dated June 2017), Table 1, 2 and 3, and Fig. 5

Anchor Diameter Inch	Two Anchor Connection Tension Design Value Lbs. [2] Vertical Support Rod Max. Offset From C.L.					Minimum Hole Depth Inch	Minimum Effective Embed. [1] Inch	Max. Impact Wrench Torque Ft-Lbs.	Minimum Edge Distance Inch	Minimum Anchor Spacing Inch
	CL ± 0"	CL ± 1"	CL ± 2"	CL ± 3"	CL ± 4"					
3/8	1,250	1,041	893	781	694	2 1/4	1.43	245	4 1/2	6.75
1/2	1,426	1,282	1,099	962	855	2 3/4	1.65	300	4 1/2	6.75
1/2	1,426	1,282	1,099	962	855	4	2.50	300	7 1/2	7.50
5/8[3]	1,426	1,455	1,552	1,461	1,298	5	3.10	350	8 3/4	9.30

1. MINIMUM EFFECTIVE EMBEDMENT IS AFTER THE ANCHOR HAS BEEN SET.
2. CONNECTION DESIGN VALUE MAY BE LIMITED BY ROD STRENGTH, PG. H1, OR STRUT NUT PULL OUT STRENGTH, PG. H3.3.
3. ROD LOCATIONS WITH SINGLE, RIGID BRACE CONNECTIONS REQUIRE ADDITIONAL SEISMIC LOAD CONSIDERATIONS BEFORE APPLYING THE ABOVE VALUES. REFER TO PROJECT SPECIFIC ISAT BRACING LEGEND. THIS LOAD INCREASE DOES NOT APPLY TO CABLE BRACES OR WHERE TWO RIGID BRACES CONNECTED TO A COMMON ROD ARE INSTALLED IN OPPOSING DIRECTIONS.
4. LOAD VALUES SHOWN ARE ALLOWABLE STRESS DESIGN (ASD). CAPACITIES DERIVED IN CONFORMANCE WITH ASCE 7-10, PIN 62 & ACI 318-11, Appendix D.
5. REFER TO DETAIL D2.1WB FOR MINIMUM CONCRETE THICKNESS ABOVE TOP FLUTE.

DUAL POWERS WEDGE-BOLT+ SCREW ANCHOR W/ 1 5/8" x 1 5/8" STRUT VERTICAL SUPPORT CONNECTION TO METAL DECK W/CONCRETE

REGISTERED PROFESSIONAL ENGINEER
MARCIN WASAZNIK
S 6612
STRUCTURAL
STATE OF CALIFORNIA

ISAT
A Division of Tomarco Contractor Specialties
International Seismic Application Technology
14848 Northam Street, La Mirada, CA 90638
877-999-4728 (Toll Free) 714-523-0845 (fax)
www.isatsb.com

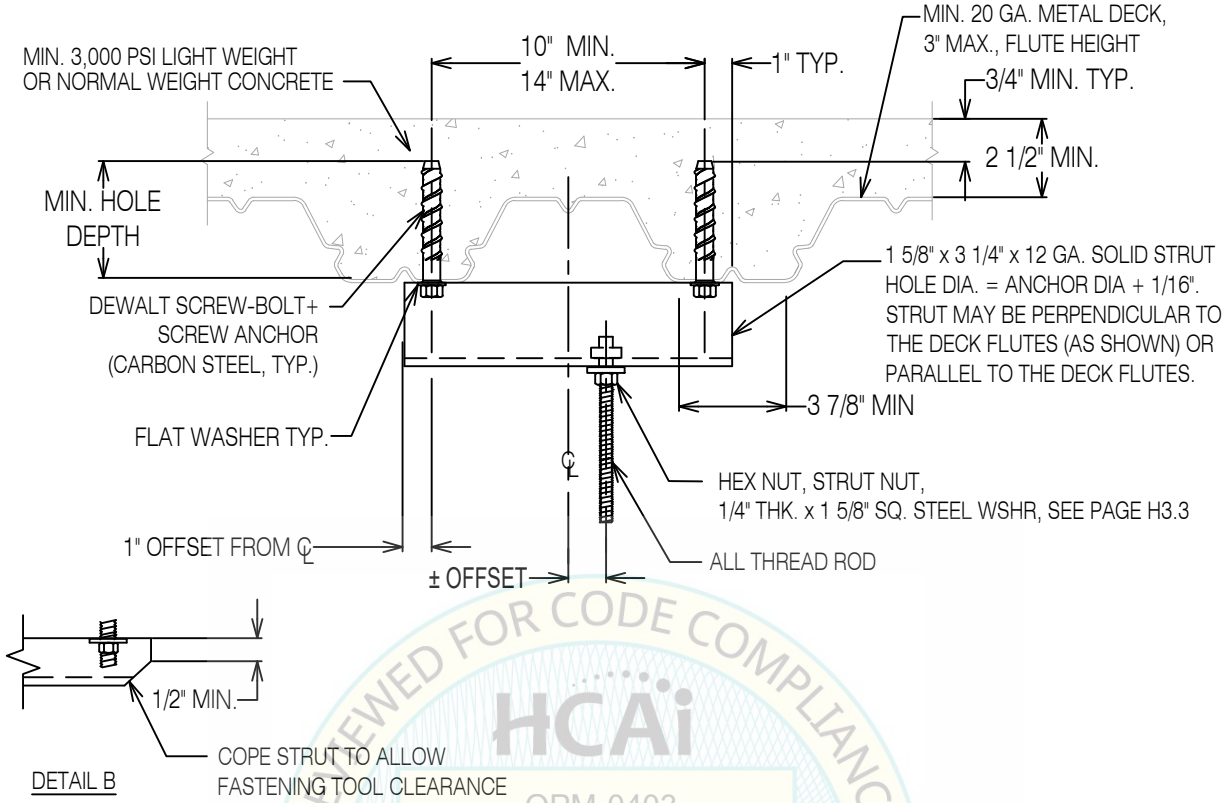

REVIEWED FOR CODE COMPLIANCE
HCAi
OPM-0403
By William Staehlin
DATE: 01-26-2024
CALIFORNIA BUILDING CODE 2022

Dewalt Screw-Bolt+ Screw Anchor, Minimum 3000 psi LWC
Seismically Qualified For Anchorage In Cracked Concrete
Seismic Design Categories C, D, E and F
ICC Report No. ESR-3889 (Dated November 2022), Table 1A, 2, 5 and Fig. 5A

Anchor Diameter	Two Anchor Connection Tension Design Value (lbs) [2] Vertical Support Rod Max. Offset From C.L.					Minimum Hole Depth	Minimum Effective Embed. [1]	Max. Impact Wrench Torque	Minimum Edge Distance	Minimum Anchor Spacing
(in)	CL ± 0"	CL ± 1"	CL ± 2"	CL ± 3"	CL ± 4"	(in)	(in)	(ft-lbs)	(in)	(in)
1/4	847	706	605	529	470	2 7/8	1.94	150	4 1/2	6.75
3/8	980	816	700	612	544	2 3/8	1.33	300	4 1/2	6.75
3/8	1,426	1,449	1,242	1,087	966	3 5/8	2.39	300	4 1/2	7.17
1/2	1,426	1,455	1,552	1,747	1,700	4 5/8	3.23	300	7 1/2	9.69
5/8[3]	1,426	1,455	1,552	1,747	2,086	5 3/8	3.73	700	8 3/4	11.19

1. MINIMUM EFFECTIVE EMBEDMENT IS AFTER THE ANCHOR HAS BEEN SET.
2. CONNECTION DESIGN VALUE MAY BE LIMITED BY ROD STRENGTH, PAGE H1, OR STRUT NUT PULL OUT STRENGTH, PAGE H3.3.
3. ROD LOCATION WITH SINGLE, RIGID BRACE CONNECTIONS REQUIRE ADDITIONAL SEISMIC LOAD CONSIDERATIONS BEFORE APPLYING THE ABOVE VALUES. REFER TO THE PROJECT SPECIFIC ISAT BRACING LEGEND. THIS LOAD INCREASE DOES NOT APPLY TO CABLE BRACES OR WHERE TWO RIGID BRACES CONNECTED TO A COMMON ROD ARE INSTALLED IN OPPOSING DIRECTIONS.
4. LOAD VALUES SHOWN ARE ALLOWABLE STRESS DESIGN (ASD). CAPACITIES DERIVED IN CONFORMANCE WITH ASCE 7-16, ACI 318.
5. REFER TO DETAIL D2.1DSB FOR MINIMUM CONCRETE THICKNESS ABOVE TOP FLUTE.

DUAL DEWALT SCREW-BOLT+ SCREW ANCHOR VERTICAL SUPPORT CONNECTION TO METAL DECK W/CONCRETE

REGISTERED PROFESSIONAL ENGINEER
MARCIN WASAZNIK
S 6612
STRUCTURAL
STATE OF CALIFORNIA

ISAT
A Division of Tomarco Contractor Specialties

International Seismic Application Technology
14848 Northam Street, La Mirada, CA 90638
877-999-4728 (Toll Free) 714-523-0845 (fax)
www.isatsb.com

Rev. 2
11/21/23

Page
G6.2DSB3

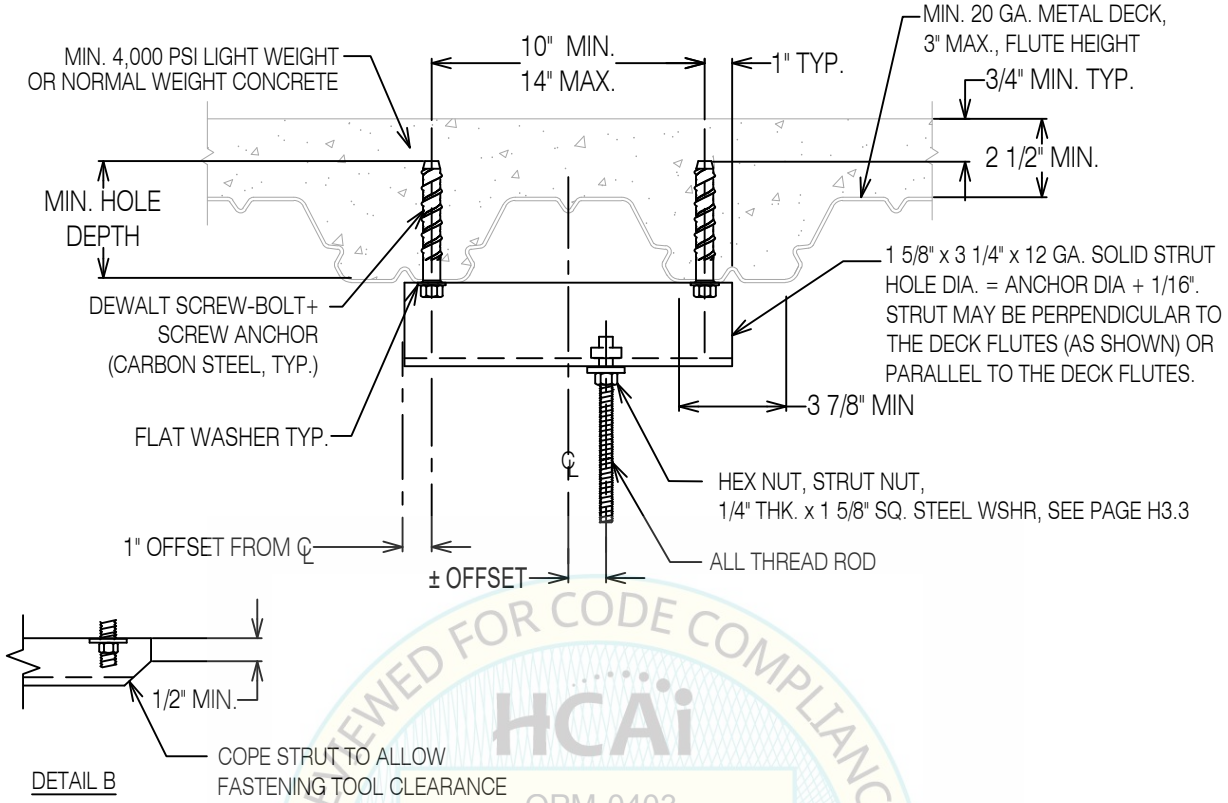

REVIEWED FOR CODE COMPLIANCE
HCAi
OPM-0403
By: William Staehlin
DATE: 01-26-2024
CALIFORNIA BUILDING CODE, 2022

Dewalt Screw-Bolt+ Screw Anchor, Minimum 4000 psi LWC
Seismically Qualified For Anchorage In Cracked Concrete
Seismic Design Categories D, E and F
ICC Report No. ESR-3889 (Dated November 2022), Table 1A, 2, 5 and Fig. 5A

Anchor Diameter	Two Anchor Connection Tension Design Value (lbs)[2] Vertical Support Rod Max. Offset From C.L.					Minimum Hole Depth	Minimum Effective Embed.[1]	Max. Impact Wrench Torque	Minimum Edge Distance	Minimum Anchor Spacing
(in)	CL ± 0"	CL ± 1"	CL ± 2"	CL ± 3"	CL ± 4"	(in)	(in)	(ft-lbs)	(in)	(in)
1/4	923	769	659	577	513	2 7/8	1.94	150	4 1/2	6.75
3/8	1,131	943	808	707	628	2 3/8	1.33	300	4 1/2	6.75
3/8	1,426	1,455	1,434	1,255	1,116	3 5/8	2.39	300	4 1/2	7.17
1/2	1,426	1,455	1,552	1,747	1,963	4 5/8	3.23	300	7 1/2	9.69
5/8[3]	1,426	1,455	1,552	1,747	2,117	5 3/8	3.73	700	8 3/4	11.19

1. MINIMUM EFFECTIVE EMBEDMENT IS AFTER THE ANCHOR HAS BEEN SET.
2. CONNECTION DESIGN VALUE MAY BE LIMITED BY ROD STRENGTH, PAGE H1, OR STRUT NUT PULL OUT STRENGTH, PAGE H3.3.
3. ROD LOCATION WITH SINGLE, RIGID BRACE CONNECTIONS REQUIRE ADDITIONAL SEISMIC LOAD CONSIDERATIONS BEFORE APPLYING THE ABOVE VALUES. REFER TO THE PROJECT SPECIFIC ISAT BRACING LEGEND. THIS LOAD INCREASE DOES NOT APPLY TO CABLE BRACES OR WHERE TWO RIGID BRACES CONNECTED TO A COMMON ROD ARE INSTALLED IN OPPOSING DIRECTIONS.
4. LOAD VALUES SHOWN ARE ALLOWABLE STRESS DESIGN (ASD). CAPACITIES DERIVED IN CONFORMANCE WITH ASCE 7-16, ACI 318.
5. REFER TO DETAIL D2.1DSB FOR MINIMUM CONCRETE THICKNESS ABOVE TOP FLUTE.

DUAL DEWALT SCREW-BOLT+ SCREW ANCHOR VERTICAL SUPPORT CONNECTION TO METAL DECK W/CONCRETE

REGISTERED PROFESSIONAL ENGINEER
MARCIN WASAZNIK
S 6612
STRUCTURAL
STATE OF CALIFORNIA

ISAT
A Division of Tomarco Contractor Specialties
International Seismic Application Technology
14848 Northam Street, La Mirada, CA 90638
877-999-4728 (Toll Free) 714-523-0845 (fax)
www.isatsb.com

Rev. 2
11/21/23

Page
G6.2DSB4

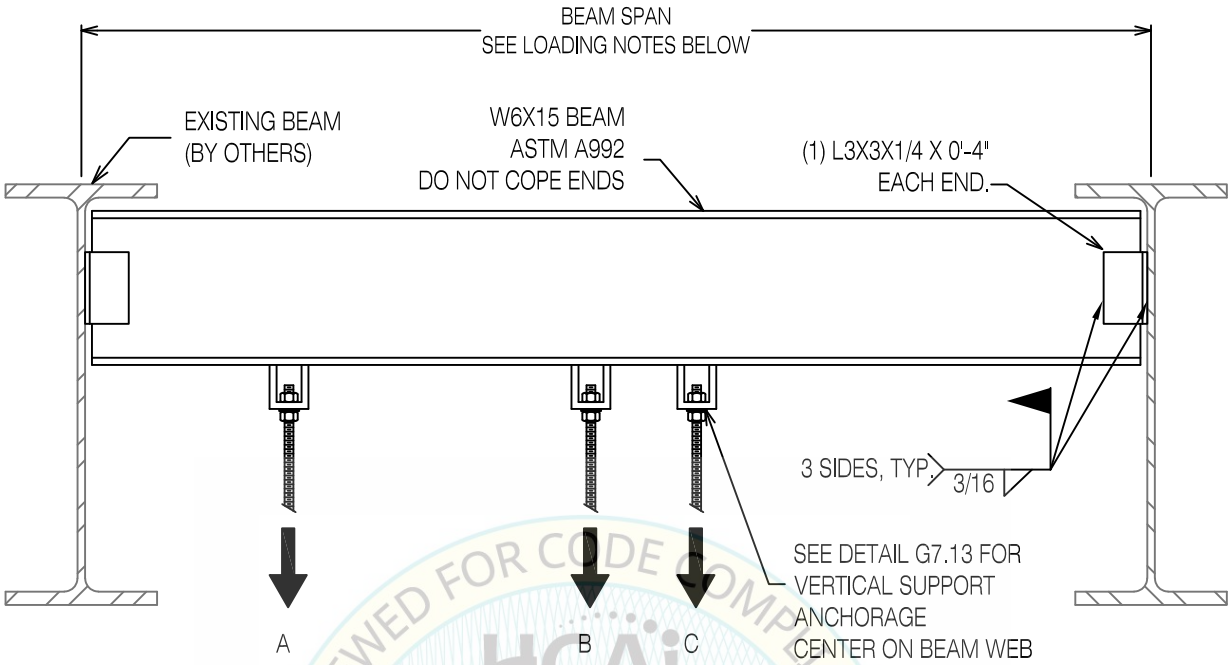

REVIEWED FOR CODE COMPLIANCE
HCAi
OPM-0403
DATE: 01-26-2024
CALIFORNIA BUILDING CODE, 2022

LOADING NOTES:

1. BEAM SPAN = 10' THE MAXIMUM ALLOWABLE LOAD = 10,000 LBS (TOTAL LOADING).
2. BEAM SPAN = 15' THE MAXIMUM ALLOWABLE LOAD = 5,000 LBS (TOTAL LOADING).
3. ANY NUMBER OF VERTICAL SUPPORT RODS MAY BE ATTACHED AT ANY LOCATION ALONG THE BOTTOM FLANGE OF BEAM. LOADS ARE TO BE CENTERED ON THE W6 BEAM WEB.

CONNECTION NOTES:

1. W6 SUPPLEMENTAL BEAM MAY BE SET AT ANY ELEVATION WITHIN THE DEPTH OF THE BEAM (DO NOT COPE ENDS).
2. W6 MAY BE PLACED ON TOP OF THE TOP FLANGE WITH 3" MINIMUM BEARING ON EACH END. USE (2) 3/16" X 2" FILLET WELDS AT THE W6 FLANGE EDGES.
3. W6 MAY BE PLACED AT THE BOTTOM OF THE BOTTOM FLANGE WITH 3" OF OVERLAP ON EACH END. USE 3/16" FILLET WELDS ALL AROUND.

STRUCTURAL ENGINEER OF RECORD TO VERIFY ADEQUACY OF FLOOR/ROOF BEAMS FOR THE ACTUAL LOADING COMBINATIONS.

NO ATTACHMENTS IN PROTECTED ZONES AS DEFINED IN AISC 341

WIDE FLANGE BEAM
SUPPLEMENTAL STEEL VERTICAL SUPPORT DETAIL

REGISTERED PROFESSIONAL ENGINEER
MARCIN WASAZNIK
S 6612
STRUCTURAL
STATE OF CALIFORNIA

ISAT
A Division of Tomarco Contractor Specialties
International Seismic Application Technology
14848 Northam Street, La Mirada, CA 90638
877-999-4728 (Toll Free) 714-523-0845 (fax)
www.isatsb.com

Rev. 7
03/17/17

Page
G7.1

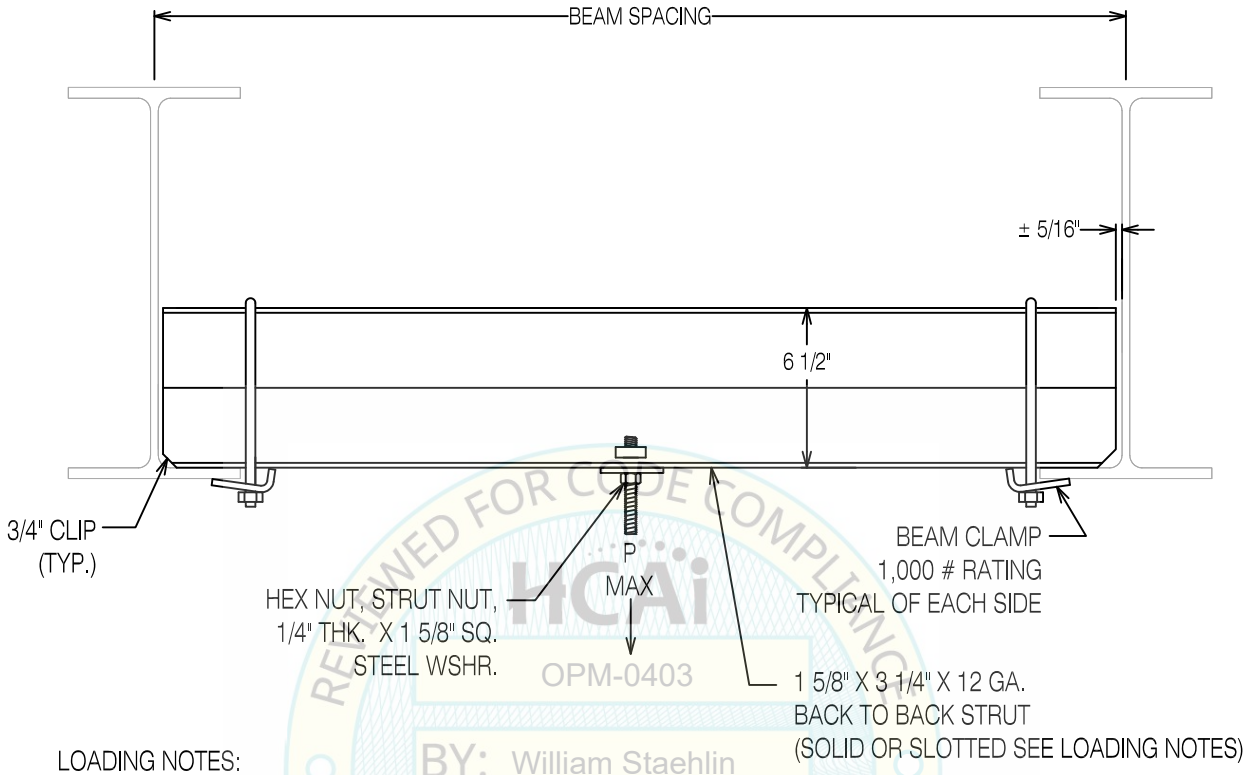

REVIEWED FOR CODE COMPLIANCE
HCAi
OPM-0403
BY: William Staehlin
DATE: 01/26/2024
CALIFORNIA BUILDING CODE

LOADING NOTES:

1. FOR 10'-0" BEAM SPACING, PMAX = 800# AT ANY LOCATION (700# FOR STRUT WITH SHORT SLOTS)
2. FOR 8'-0" BEAM SPACING , PMAX = 1000# AT ANY LOCATION (SOLID OR WITH SHORT SLOTS)
   = 1300# IN CENTER ±2'-0" FOR SOLID STRUT (1100# FOR SHORT SLOTS)
3. FOR 6'-0" BEAM SPACING , PMAX = 1000# AT ANY LOCATION (SOLID OR WITH SHORT SLOTS)
   = 1500# IN CENTER ±1'-0" (SOLID OR WITH SHORT SLOTS)

CONNECTION NOTES:

STRUT MAY BE PLACED ON THE TOP OF THE BOTTOM FLANGE (AS SHOWN), ON TOP OF THE TOP FLANGE, OR HUNG FROM EITHER THE TOP OR BOTTOM FLANGES.

STRUCTURAL ENGINEER OF RECORD TO VERIFY ADEQUACY OF FLOOR/ROOF BEAMS FOR THE ACTUAL LOADING COMBINATIONS.

NO ATTACHMENTS IN PROTECTED ZONES AS DEFINED IN AISC 341

1 5/8" x 3 1/4" BACK TO BACK STRUT VERTICAL SUPPORT CONNECTION

REGISTERED PROFESSIONAL ENGINEER
MARCIN WASAZNIK
S 6612
STRUCTURAL
STATE OF CALIFORNIA

ISAT
A Division of Tomarco Contractor Specialties

International Seismic Application Technology
14848 Northam Street, La Mirada, CA 90638
877-999-4728 (Toll Free) 714-523-0845 (fax)
www.isatsb.com

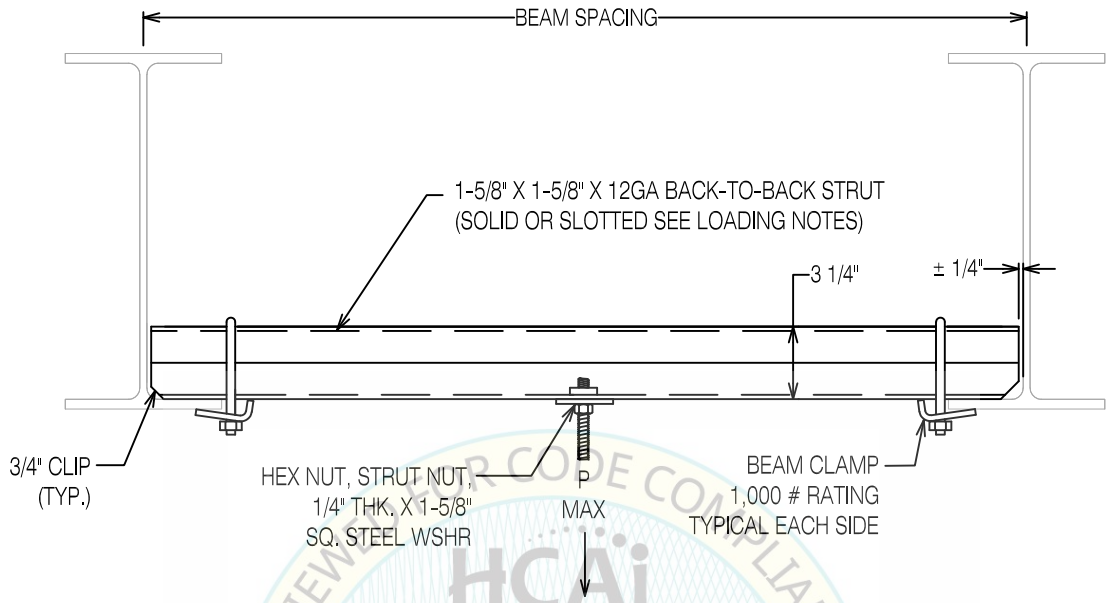

REVIEWED FOR CODE COMPLIANCE
HCAi
OPM-0403
BY: William Staehlin
DATE: 01-26-2024
CALIFORNIA BUILDING CODE 2022

LOADING NOTES:

1. FOR 6'-0" BEAM SPACING PMAX = 700# AT ANY LOCATION FOR SOLID STRUT (PMAX = 600# FOR STRUT WITH SHORT SLOTS)
2. FOR 8'-0" BEAM SPACING PMAX = 500# AT ANY LOCATION FOR SOLID STRUT (PMAX = 400# FOR STRUT WITH SHORT SLOTS)
3. FOR 10'-0" BEAM SPACING PMAX = 350# AT ANY LOCATION FOR SOLID STRUT (PMAX = 300# FOR STRUT WITH SHORT SLOTS)

CONNECTION NOTES:

STRUT MAY BE PLACED ON THE TOP OF THE BOTTOM FLANGE (AS SHOWN) ON TOP OF THE TOP FLANGE OR HUNG FROM EITHER THE TOP OF BOTTOM FLANGES.

STRUCTURAL ENGINEER OF RECORD TO VERIFY ADEQUACY OF FLOOR/ROOF BEAMS FOR THE ACTUAL LOADING COMBINATIONS.

NO ATTACHMENTS IN PROTECTED ZONES AS DEFINED IN AISC 341

1 5/8" x 1 5/8" BACK TO BACK STRUT VERTICAL SUPPORT CONNECTION

REGISTERED PROFESSIONAL ENGINEER
MARCIN WASAZNIK
S 6612
STRUCTURAL
STATE OF CALIFORNIA

ISAT
A Division of Tomarco Contractor Specialties
International Seismic Application Technology
14848 Northam Street, La Mirada, CA 90638
877-999-4728 (Toll Free) 714-523-0845 (fax)
www.isatsb.com

Rev. 7
03/30/18

Page
G7.3

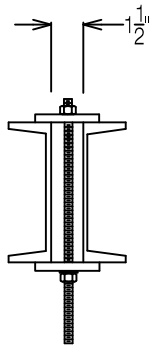

SUPPORT ROD DETAIL

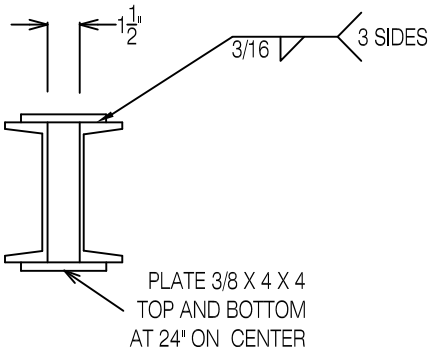

CHANNEL TIE PLATE DETAIL

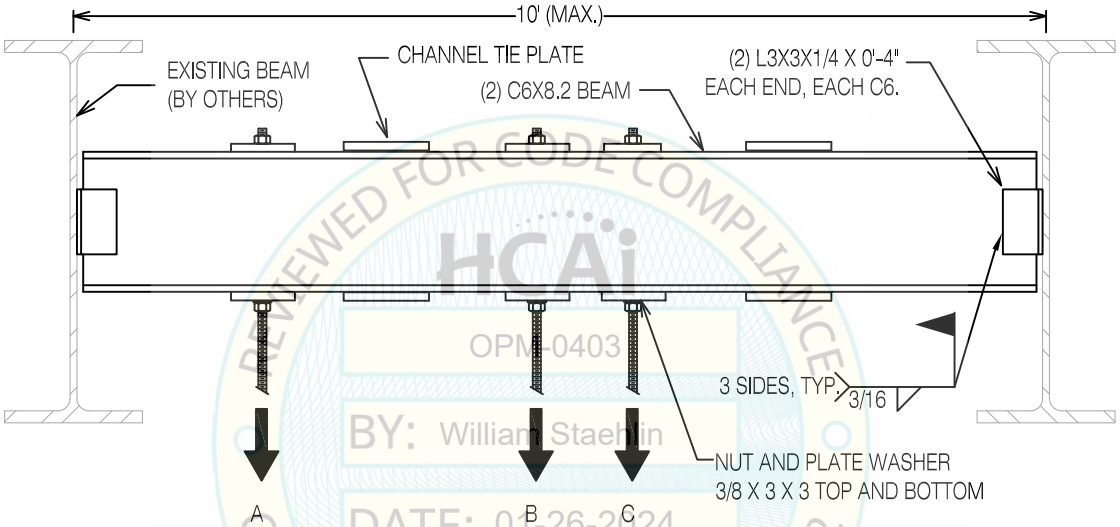

REVIEWED FOR CODE COMPLIANCE
HCAi
OPM-0403
BY: William Staehlin
DATE: 01-26-2024
CALIFORNIA BUILDING CODE, 2022

LOADING NOTES:

MAXIMUM ALLOWABLE LOAD =
4,000 LBS (TOTAL LOADING) FOR A 10' CHANNEL SPAN
6,000 LBS (TOTAL LOADING) FOR A 8' CHANNEL SPAN
9,000 LBS (TOTAL LOADING) FOR A 6' CHANNEL SPAN

CONNECTION NOTES:

1. ANY NUMBER OF VERTICAL SUPPORT RODS MAY BE ATTACHED TO ABOVE ANCHORAGE AT ANY LOCATION.
2. ROD EXTENDS TO THE TOP FLANGE FOR THE CHANNELS.
3. C6 SUPPLEMENTAL BEAMS MAY BE SET AT ANY ELEVATION WITHIN THE DEPTH OF THE BEAM (DO NOT COPE ENDS).

STRUCTURAL ENGINEER OF RECORD TO VERIFY ADEQUACY OF FLOOR/ROOF BEAMS FOR THE ACTUAL LOADING COMBINATIONS.

NO ATTACHMENTS IN PROTECTED ZONES AS DEFINED IN AISC 341

(2)C6X8.2 STEEL CHANNELS (ASTM A36)
SUPPLEMENTAL STEEL VERTICAL SUPPORT DETAIL

REGISTERED PROFESSIONAL ENGINEER
MARCIN WASAZNIK
S 6612
STRUCTURAL
STATE OF CALIFORNIA

ISAT
A Division of Tomarco Contractor Specialties
International Seismic Application Technology
14848 Northam Street, La Mirada, CA 90638
877-999-4728 (Toll Free) 714-523-0845 (fax)
www.isatsb.com

Rev. 7
03/23/18

Page
G7.4

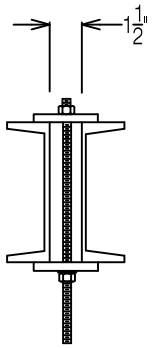

SUPPORT ROD DETAIL

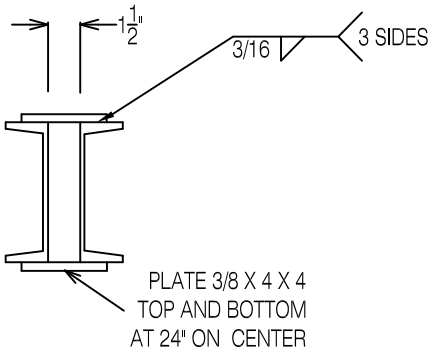

CHANNEL TIE PLATE DETAIL

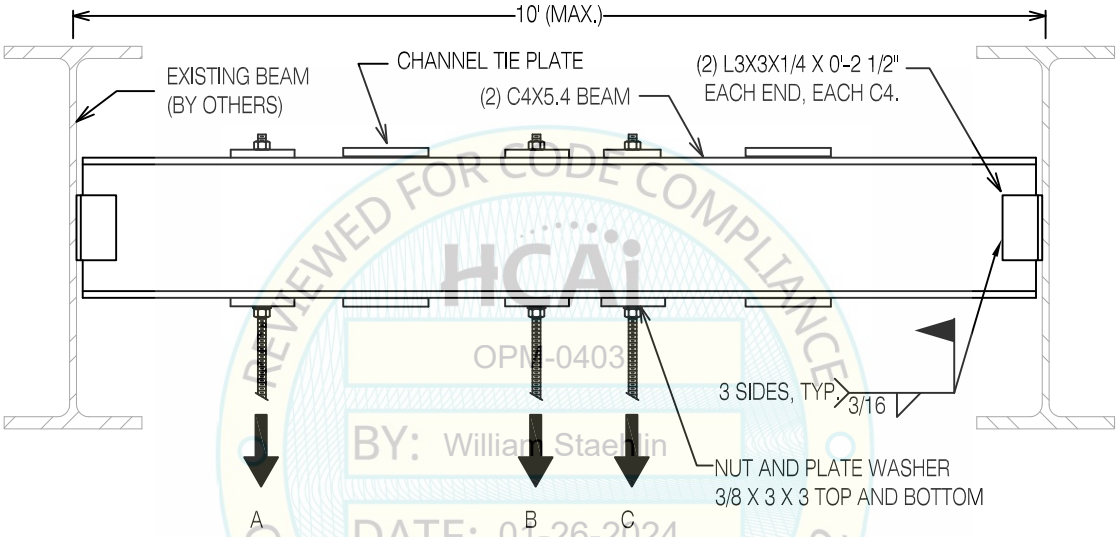

REVIEWED FOR CODE COMPLIANCE
HCAi
OPM-0403
BY: William Staehlin
DATE: 01-26-2024
CALIFORNIA BUILDING CODE, 2022

LOADING NOTES:

MAXIMUM ALLOWABLE LOAD =
1,750 LBS (TOTAL LOADING) FOR A 10' CHANNEL SPAN
2,500 LBS (TOTAL LOADING) FOR A 8' CHANNEL SPAN
4,000 LBS (TOTAL LOADING) FOR A 6' CHANNEL SPAN

CONNECTION NOTES:

1. ANY NUMBER OF VERTICAL SUPPORT RODS MAY BE ATTACHED TO ABOVE ANCHORAGE AT ANY LOCATION.
2. ROD EXTENDS TO THE TOP FLANGE FOR THE CHANNELS.
3. C4 SUPPLEMENTAL BEAMS MAY BE SET AT ANY ELEVATION WITHIN THE DEPTH OF THE BEAM (DO NOT COPE ENDS).

STRUCTURAL ENGINEER OF RECORD TO VERIFY ADEQUACY OF FLOOR/ROOF BEAMS FOR THE ACTUAL LOADING COMBINATIONS.

NO ATTACHMENTS IN PROTECTED ZONES AS DEFINED IN AISC 341

(2)C4X5.4 STEEL CHANNELS (ASTM A36)
SUPPLEMENTAL STEEL VERTICAL SUPPORT DETAIL

ISAT
A Division of Tomarco Contractor Specialties
International Seismic Application Technology
14848 Northam Street, La Mirada, CA 90638
877-999-4728 (Toll Free) 714-523-0845 (fax)
www.isatsb.com

Rev. 7
03/23/18

Page
G7.4.1

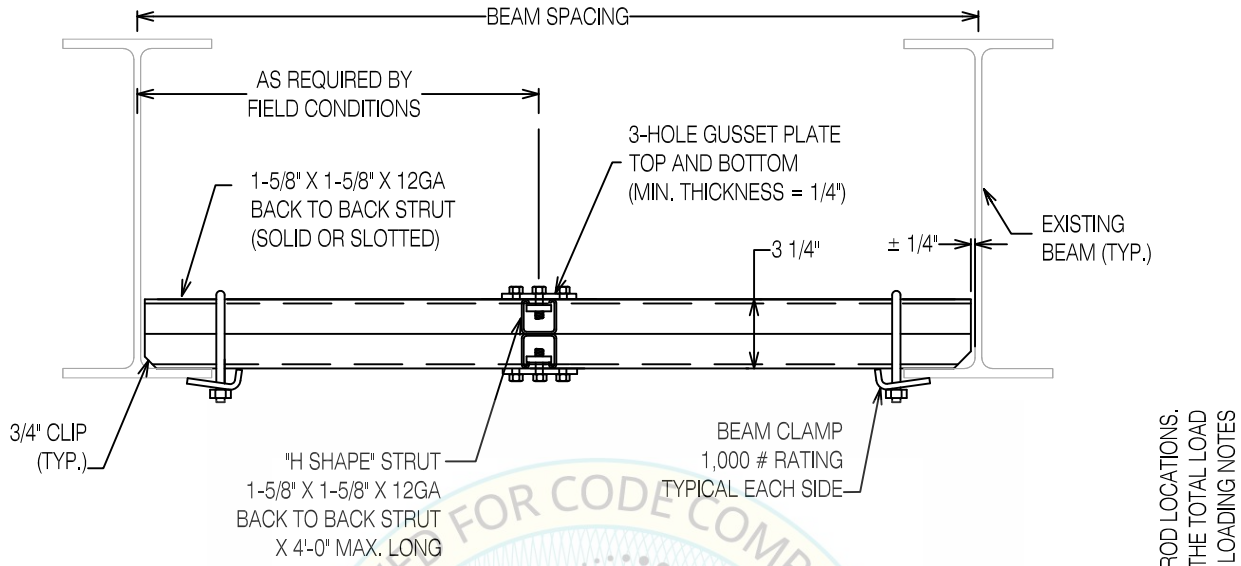

LOADING NOTES:

1. FOR 6'-0" BEAM SPACING PMAX = 700# AT ANY LOCATION FOR SOLID STRUT (PMAX = 600# FOR STRUT WITH SHORT SLOTS)
2. FOR 8'-0" BEAM SPACING PMAX = 500# AT ANY LOCATION FOR SOLID STRUT (PMAX = 400# FOR STRUT WITH SHORT SLOTS)
3. FOR 10'-0" BEAM SPACING PMAX = 350# AT ANY LOCATION FOR SOLID STRUT (PMAX = 300# FOR STRUT WITH SHORT SLOTS)

CONNECTION NOTES:

1. STRUT MAY BE PLACED ON THE TOP OF THE BOTTOM FLANGE (AS SHOWN) ON TOP OF THE TOP FLANGE OR HUNG FROM EITHER THE TOP OF BOTTOM FLANGES.
2. PMAX MAY BE LOCATED ANYWHERE ALONG THE 4'-0" LENGTH OF THE "H-SHAPE" STRUT.

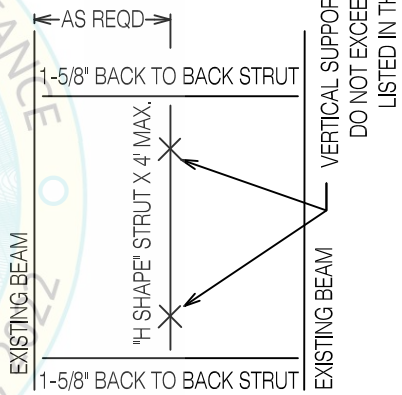

SCHEMATIC PLAN

STRUCTURAL ENGINEER OF RECORD TO VERIFY ADEQUACY OF FLOOR/ROOF BEAMS FOR THE ACTUAL LOADING COMBINATIONS.

NO ATTACHMENTS IN PROTECTED ZONES AS DEFINED IN AISC 341

REVIEWED FOR CODE COMPLIANCE
HCAi
OPM-0403
BY: William Staehlin
DATE: 01-26-2024
CALIFORNIA BUILDING CODE, 2022

"H-SHAPE" 1 5/8" x 1 5/8" BACK TO BACK STRUT VERTICAL SUPPORT CONNECTION

REGISTERED PROFESSIONAL ENGINEER MARCIN WASAZNIK S-6612 STRUCTURAL STATE OF CALIFORNIA

ISAT
A Division of Tomarco Contractor Specialties

International Seismic Application Technology
14848 Northam Street, La Mirada, CA 90638
877-999-4728 (Toll Free) 714-523-0845 (fax)
www.isatsb.com

Rev. 7
03/23/18

Page
G7.5

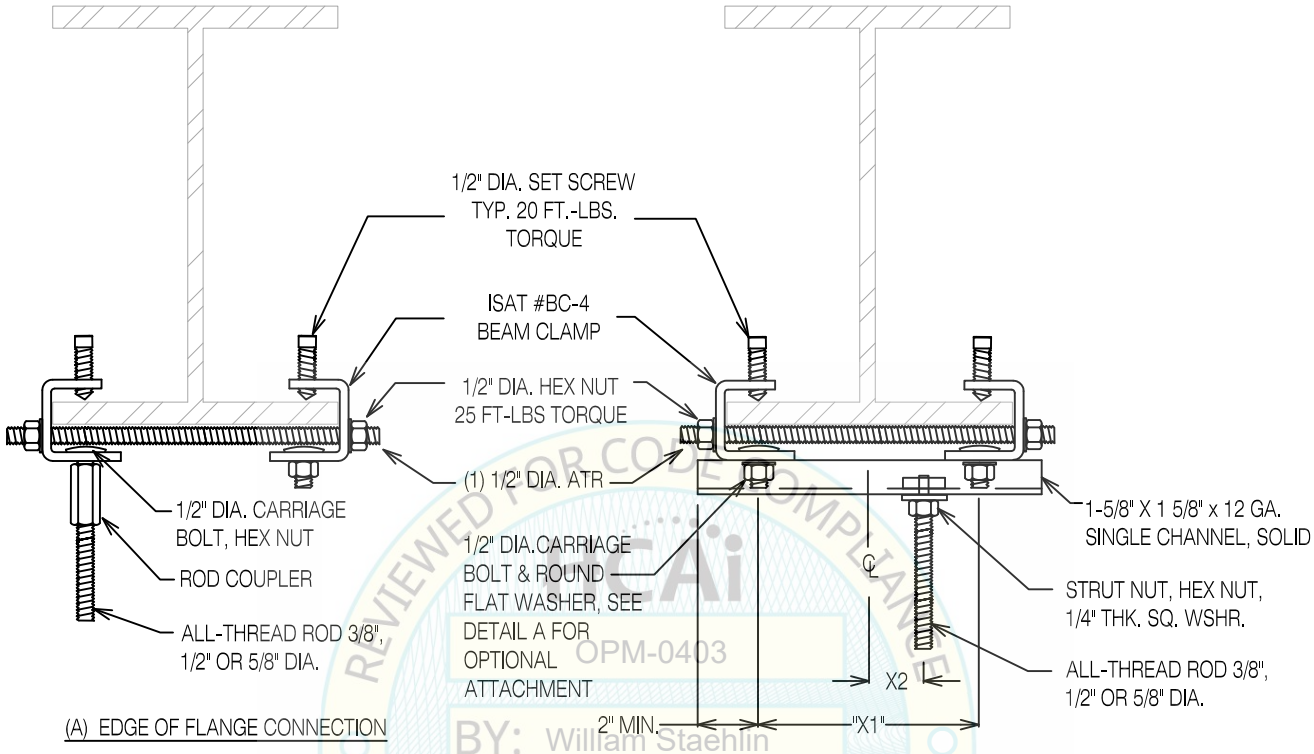

(A) EDGE OF FLANGE CONNECTION

(B) LOCATION OF ROD VARIES

VERTICAL SUPPORT TENSION DESIGN LOAD:
700 LBS MAX.

REVIEWED FOR CODE COMPLIANCE
OPM-0403
BY: William Staehlin
DATE: 01-26-2024
CALIFORNIA BUILDING CODE, 2022

MAXIMUM ALLOWABLE LOAD (LBS)						
MAX SPAN	ROD LOCATION X2 CL +/- (INCH)					
X1 (INCH)	0	1	2	3	4	5
6	1400	1050	840	-	-	-
8	1400	1120	933	800	-	-
10	1400	1167	1000	875	778	-
12	1400	1200	1050	933	840	764

ALLOWABLE LOAD MAY BE LIMITED BY ROD STRENGTH, PAGE H1
OR STRUT NUT PULL-OUT STRENGTH, PAGE H3.2.

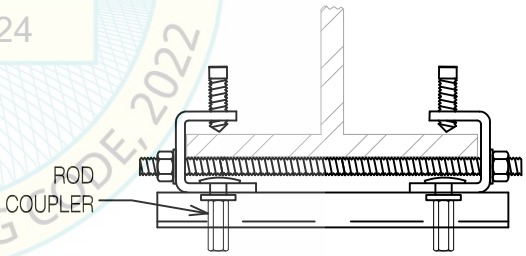

DETAIL A - OPTIONAL ATTACHMENT
ROD COUPLER

CONNECTION TO STRUCTURAL STEEL SUBJECT TO PRIOR APPROVAL FROM ENGINEER OF RECORD

STRUCTURAL ENGINEER OF RECORD TO VERIFY ADEQUACY OF FLOOR/ROOF BEAMS FOR THE ACTUAL LOADING COMBINATIONS.

NO ATTACHMENTS IN PROTECTED ZONES AS DEFINED IN AISC 341

BC-4 BEAM CLAMP ASSEMBLY
VERTICAL SUPPORT CONNECTION

REGISTERED PROFESSIONAL ENGINEER
MARCIN WASAZNIK
S 6612
STRUCTURAL
STATE OF CALIFORNIA

ISAT
A Division of Tomarco Contractor Specialties
International Seismic Application Technology
14848 Northam Street, La Mirada, CA 90638
877-999-4728 (Toll Free) 714-523-0845 (fax)
www.isatsb.com

Rev. 7
04/30/18

Page
G7.10

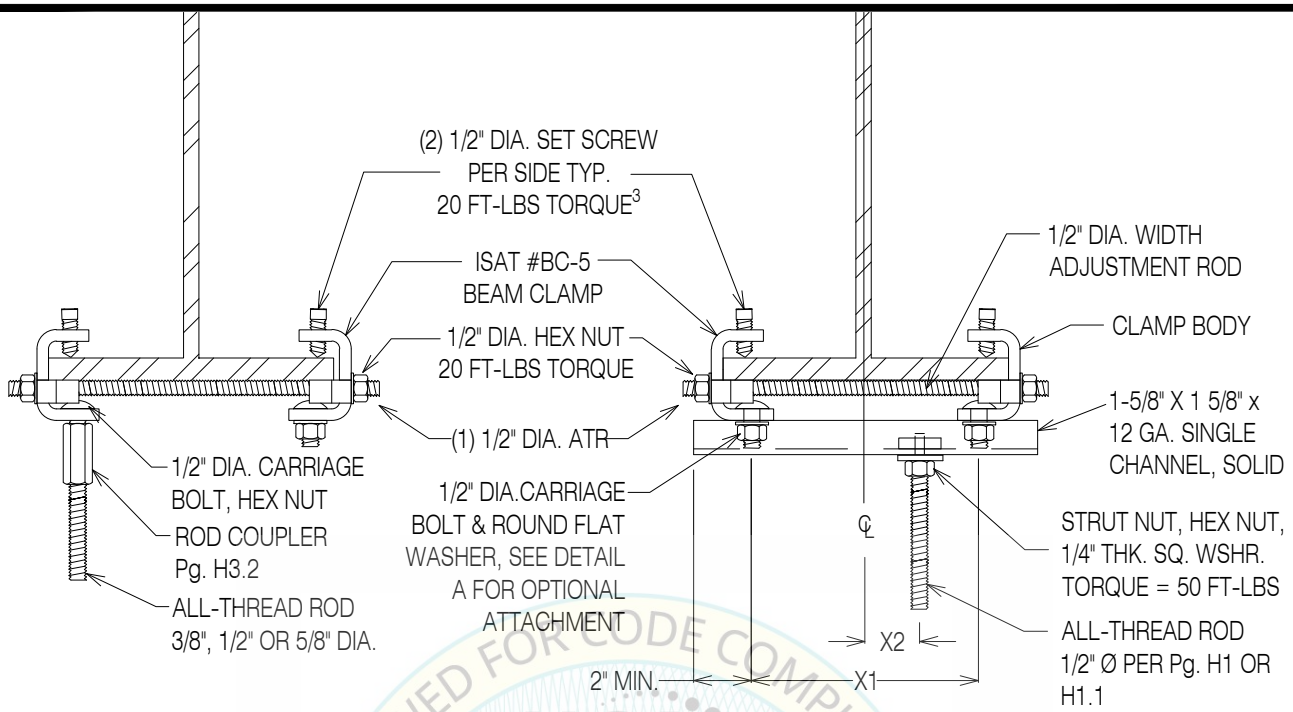

(A) EDGE OF FLANGE CONNECTION

(B) LOCATION OF ROD VARIES

VERTICAL SUPPORT TENSION DESIGN LOAD:
1585 LBS MAX.

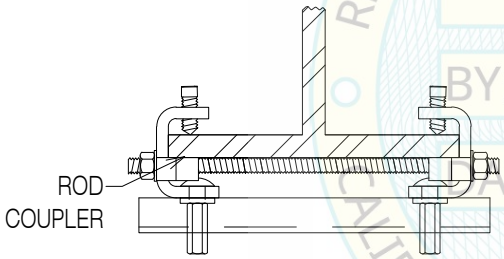

DETAIL A - OPTIONAL ATTACHMENT
ROD COUPLER

MAXIMUM ALLOWABLE LOAD (LBS)						
MAX. SPAN X1 (IN.)	ROD LOCATION X2 CL +/- (IN.)					
	0	1	2	3	4	5
6	2,440	2,375	1,900	-	-	-
8	2,440	2,440	2,115	1,810	-	-
10	1,995	2,080	2,265	1,980	1,760	-
12	1,665	1,710	1,870	2,110	1,900	1,730

ALLOWABLE LOAD MAY BE LIMITED BY ROD STRENGTH, H1, H1.1 OR STRUT NUT PULL-OUT STRENGTH, PAGE H3.3

CONNECTION TO STRUCTURAL STEEL SUBJECT TO PRIOR APPROVAL FROM ENGINEER OF RECORD

REVIEWED FOR CODE COMPLIANCE
HCAi
OPM-0403
BY: William Staehlin
DATE: 01-26-2024
CALIFORNIA BUILDING CODE

INSTALLATION INSTRUCTIONS:

1. LOOSELY FIT THE BC-5 ASSEMBLY OVER THE STEEL BEAM AS SHOWN IN THE IMAGE ABOVE.
2. HAND TIGHTEN THE NUTS ON THE "WIDTH ADJUSTMENT ROD" AND SET SCREWS ON THE "CLAMP BODY" SO THAT THE "CLAMP BODY" ON EACH SIDE IS SITTING FLAT AGAINST THE SIDE OF THE BEAM FLANGE.
3. STARTING WITH EITHER OF THE "CLAMP BODIES", TORQUE THE FIRST SET SCREW TO 20 FT-LBS, THEN TORQUE THE SECOND SET SCREW TO 20 FT-LBS. NOTE, TORQUE EACH SET SCREW ONLY ONCE.
4. REPEAT STEP 3 ON THE OTHER "CLAMP BODY".
5. TORQUE THE NUTS ON THE "WIDTH ADJUSTMENT ROD" TO 20 FT-LBS.

6A. FOR APPLICATION "A", ATTACH THE VERTICAL ATR TO THE CARRIAGE BOLT USING A ROD COUPLER.

6B. FOR APPLICATION "B", ATTACH THE STRUT MEMBER TO THE CARRIAGE BOLTS, THEN ATTACH THE VERTICAL ATR TO THE STRUT MEMBER.

7. DESIGN IS CONTROLLED BY SEISMIC FORCES. NON-SEISMIC FORCES SUCH AS GRAVITY ARE OUTSIDE THE SCOPE OF THIS OPM.

BC-5 BEAM CLAMP ASSEMBLY
VERTICAL SUPPORT CONNECTION

REGISTERED PROFESSIONAL ENGINEER
MARCIN WASAZNIK
S-6612
STRUCTURAL
STATE OF CALIFORNIA

ISAT
A Division of Tomarco Contractor Specialties
International Seismic Application Technology
14848 Northam Street, La Mirada, CA 90638
877-999-4728 (Toll Free) 714-523-0845 (fax)
www.isatsb.com

Rev. 1
6/1/2023

Page
G7.10.1

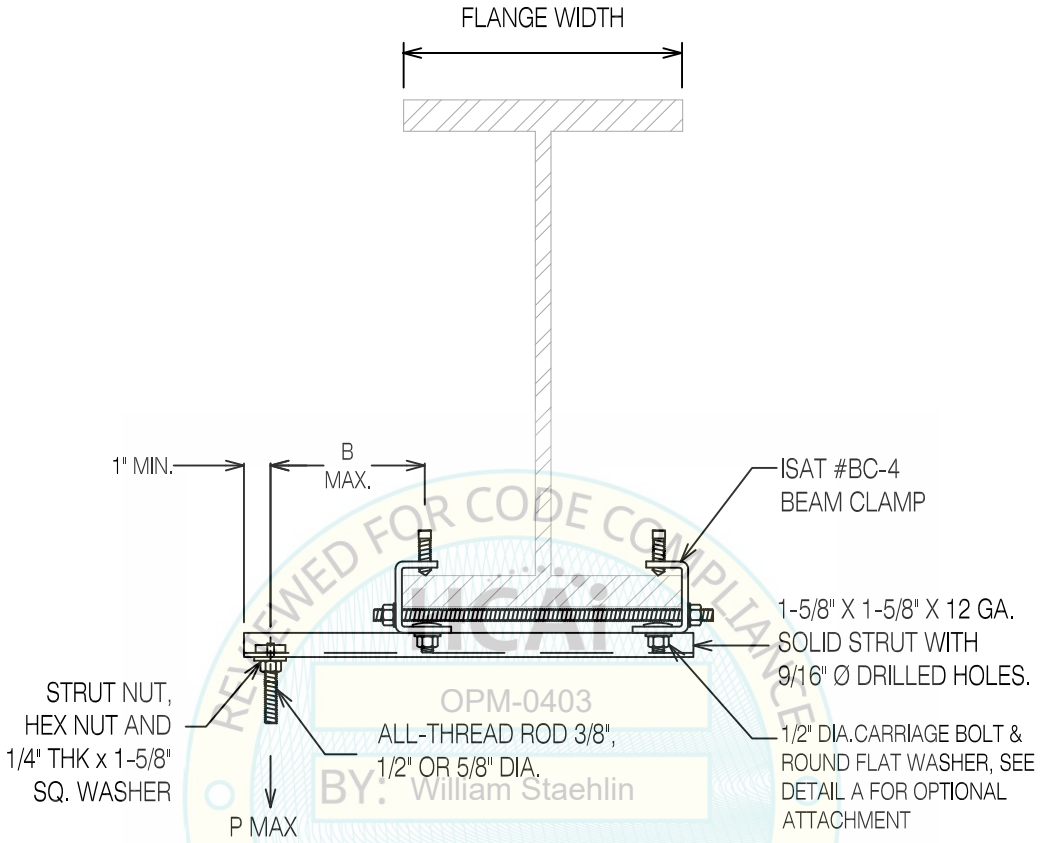

REVIEWED FOR CODE COMPLIANCE
OPM-0403
BY: William Staehlin
DATE: 01-26-2024
CALIFORNIA BUILDING CODE, 2022

B	FLANGE WIDTH	PMAX
6"	≥6"	500#
6"	<6"	350#
10"	≥6"	450#
10"	<6"	300#

CONNECTION TO STRUCTURAL STEEL SUBJECT TO PRIOR APPROVAL FROM ENGINEER OF RECORD

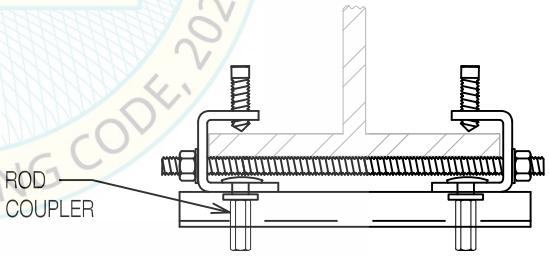

DETAIL A - OPTIONAL ATTACHMENT
ROD COUPLER

STRUCTURAL ENGINEER OF RECORD TO VERIFY ADEQUACY OF FLOOR/ROOF BEAMS FOR THE ACTUAL LOADING COMBINATIONS.

NO ATTACHMENTS IN PROTECTED ZONES AS DEFINED IN AISC 341

CANTILEVERED STRUT WITH BC-4 BEAM CLAMP VERTICAL SUPPORT CONNECTION

REGISTERED PROFESSIONAL ENGINEER
MARCIN WASAZNIK
S 6612
STRUCTURAL
STATE OF CALIFORNIA

ISAT
A Division of Tomarco Contractor Specialties
International Seismic Application Technology
14848 Northam Street, La Mirada, CA 90638
877-999-4728 (Toll Free) 714-523-0845 (fax)
www.isatsb.com

Rev. 7
05/01/18

Page
G7.11

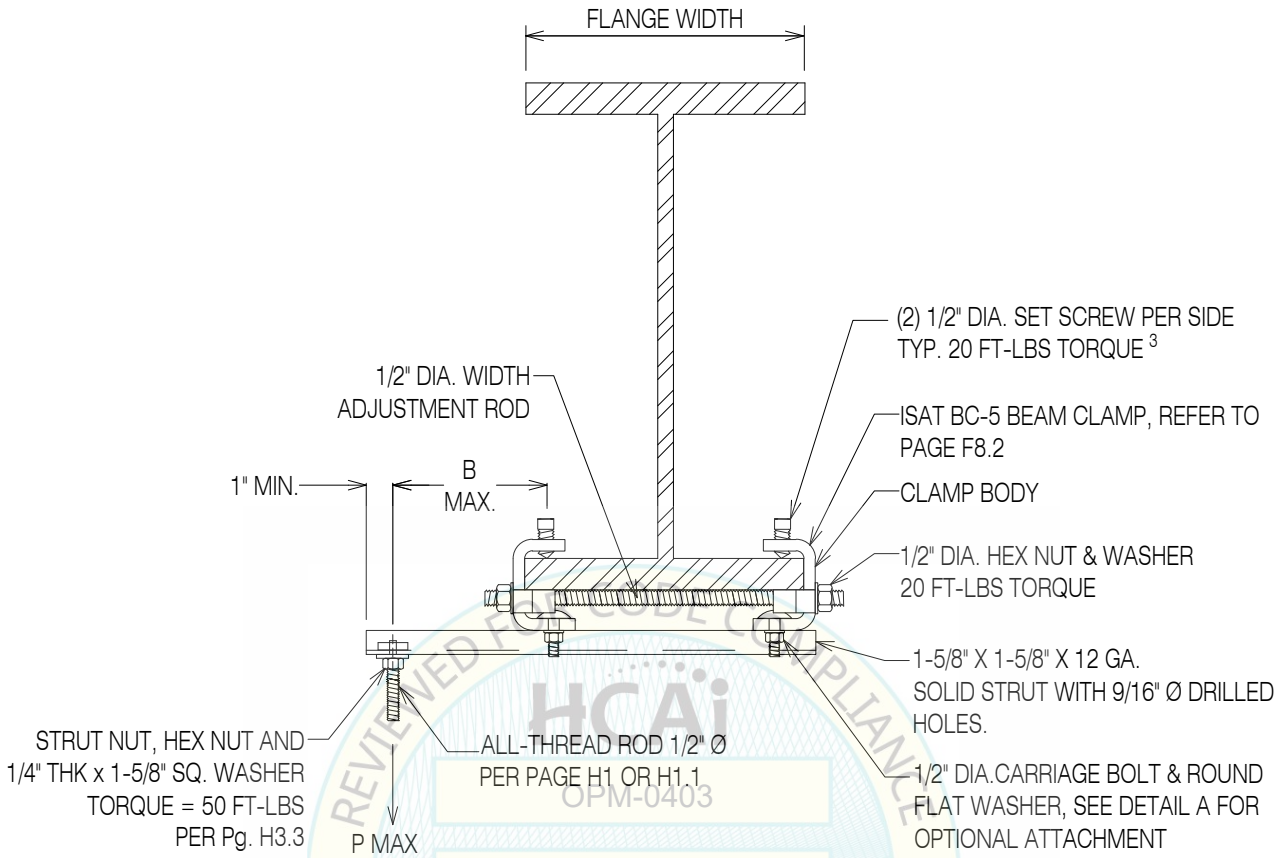

B	FLANGE WIDTH	PMAX
6"	≥6"	675#
6"	<6"	450#
10"	≥6"	490#
10"	<6"	450#

CONNECTION TO STRUCTURAL STEEL SUBJECT TO PRIOR APPROVAL FROM ENGINEER OF RECORD

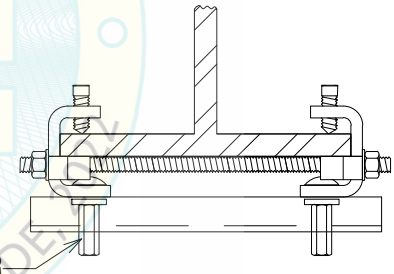

DETAIL A - OPTIONAL ATTACHMENT ROD COUPLER

REVIEWED FOR CODE COMPLIANCE
HCAi
OPM-0403
BY: William Staehlin
DATE: 01-26-2024
CALIFORNIA BUILDING CODE

INSTALLATION INSTRUCTIONS:

1. LOOSELY FIT THE BC-5 ASSEMBLY OVER THE STEEL BEAM AS SHOWN IN THE IMAGE ABOVE.
2. HAND TIGHTEN THE NUTS ON THE "WIDTH ADJUSTMENT ROD" AND SET SCREWS ON THE "CLAMP BODY" SO THAT THE "CLAMP BODY" ON EACH SIDE IS SITTING FLAT AGAINST THE SIDE OF THE BEAM FLANGE.
3. STARTING WITH EITHER OF THE "CLAMP BODIES", TORQUE THE FIRST SET SCREW TO 20 FT-LBS, THEN TORQUE THE SECOND SET SCREW TO 20 FT-LBS. NOTE, TORQUE EACH SET SCREW ONLY ONCE.
4. REPEAT STEP 3 ON THE OTHER "CLAMP BODY".
5. TORQUE THE NUTS ON THE "WIDTH ADJUSTMENT ROD" TO 20 FT-LBS.
6. ATTACH THE STRUT MEMBER TO THE CARRIAGE BOLTS, THEN ATTACH THE VERTICAL ATR TO THE STRUT MEMBER.
7. DESIGN IS CONTROLLED BY SEISMIC FORCES. NON-SEISMIC FORCES SUCH AS GRAVITY ARE OUTSIDE THE SCOPE OF THIS OPM.

CANTILEVERED STRUT WITH BC-5 BEAM CLAMP
VERTICAL SUPPORT CONNECTION

REGISTERED PROFESSIONAL ENGINEER MARCIN WASAZNIK S-6612 STRUCTURAL STATE OF CALIFORNIA

ISAT
A Division of Tomarco Contractor Specialties
International Seismic Application Technology
14848 Northam Street, La Mirada, CA 90638
877-999-4728 (Toll Free) 714-523-0845 (fax)
www.isatsb.com

Rev. 1
6/7/2023

Page
G7.11.1

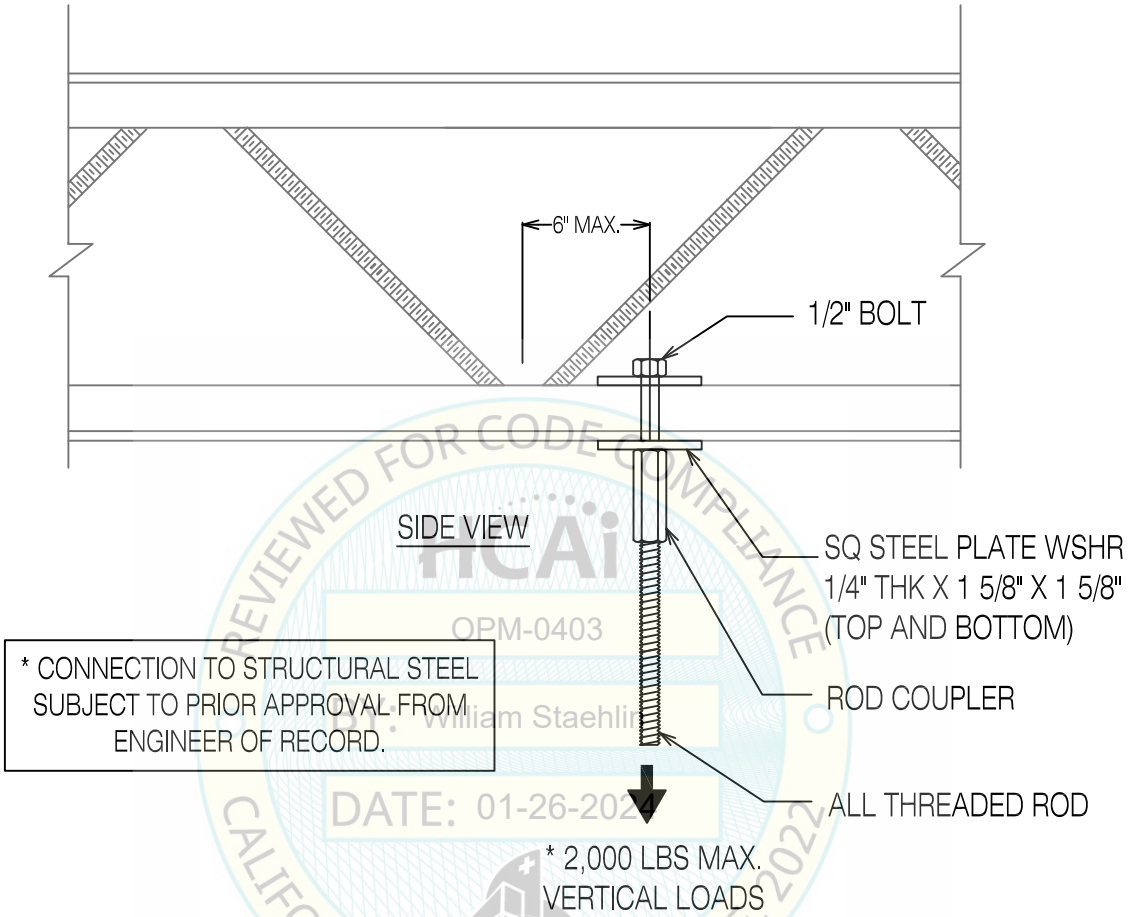

* CONNECTION TO STRUCTURAL STEEL SUBJECT TO PRIOR APPROVAL FROM ENGINEER OF RECORD.

REVIEWED FOR CODE COMPLIANCE
HCAi
OPM-0403
By: William Staehlin
DATE: 01-26-2024
CALIFORNIA BUILDING CODE, 2022

IN-LINE VERTICAL SUPPORT CONNECTION
BOTTOM OF CHORDS OF OPEN WEB STEEL JOIST

REGISTERED PROFESSIONAL ENGINEER
MARCIN WASAZNIK
S 6612
STRUCTURAL
STATE OF CALIFORNIA

ISAT
A Division of Tomarco Contractor Specialties

International Seismic Application Technology
14848 Northam Street, La Mirada, CA 90638
877-999-4728 (Toll Free) 714-523-0845 (fax)
www.isatsb.com

Rev. 7
03/17/17

Page
G7.12

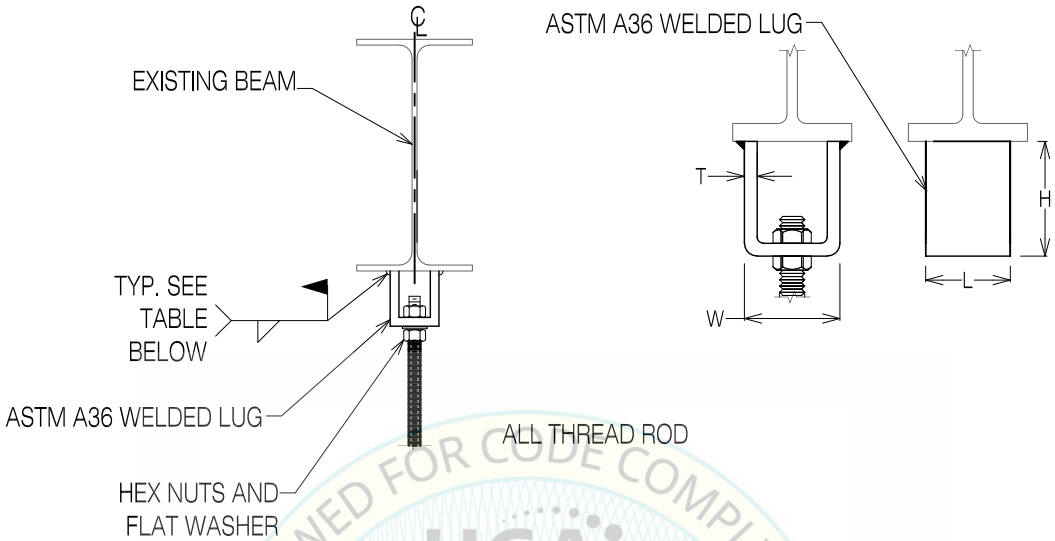

REVIEWED FOR CODE COMPLIANCE
HCAi
OPM-0403
BY: William Staehlin
DATE: 01-26-2024
CALIFORNIA BUILDING CODE 2022

WELDED LUG, ANSI/MSS SP58-2009, TYPE 22										
ROD DIA. (IN)	MOUNTING LUG PART NUMBER	LUG DIMENSIONS (IN)							MIN. WELD SIZE (IN)	MAX. DESIGN TENSION (LBS)
		H	C	D	E	L	T	W		
3/8	LUGS	3	1 7/8	1	7/8	2 1/2	0.364	3	3/16	730
1/2	LUGS	3	1 7/8	1	7/8	2 1/2	0.364	3	3/16	1,350
5/8	LUGS	3	1 7/8	1	7/8	2 1/2	0.364	3	3/16	2,160
3/4	LUGS	3	1 7/8	1	7/8	2 1/2	0.364	3	3/16	3,230
7/8	LUGS	3	1 7/8	1	7/8	2 1/2	0.364	3	3/16	4,480
1	LUGL	4 1/2	1 3/4	1	7/8	3	0.500	3 3/4	3/16	5,900
1-1/8	LUGL	4 1/2	1 3/4	1	7/8	3	0.500	3 3/4	3/16	6,230
1-1/4	LUGL	4 1/2	1 3/4	1	7/8	3	0.500	3 3/4	3/16	8,620

STRUCTURAL ENGINEER OF RECORD TO VERIFY ADEQUACY OF FLOOR/ROOF BEAMS FOR THE ACTUAL LOADING COMBINATIONS.

NO ATTACHMENTS IN PROTECTED ZONES AS DEFINED IN AISC 341

WELDED LUG ATTACHMENT TO WIDE FLANGE BEAM

REGISTERED PROFESSIONAL ENGINEER MARCIN WASAZNIK S-6612 STRUCTURAL STATE OF CALIFORNIA

ISAT
A Division of Tomarco Contractor Specialties
International Seismic Application Technology
14848 Northam Street, La Mirada, CA 90638
877-999-4728 (Toll Free) 714-523-0845 (fax)
www.isatsb.com

Rev. 7
03/23/18

Page
G7.13

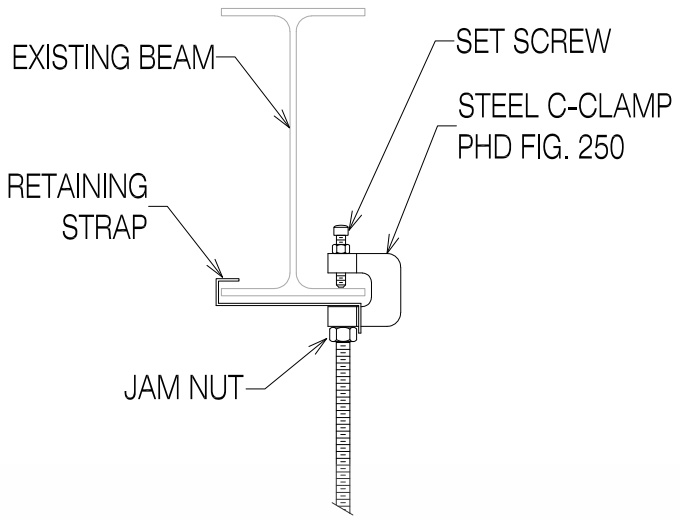

STEEL C-CLAMP ANSI-MSS SP58-2009 TYPE 23	
ROD. DIA. Inch	MAX. DESIGN TENSION Lbs
3/8	400
1/2	500
5/8	550
3/4	600
7/8	900

SET SCREW TORQUE				
NOMINAL THREAD SIZE		3/8"	5/8"	3/4"
REQ'D TORQUE	IN-LBS	60	250	400

REVIEWED FOR CODE COMPLIANCE
HCAi
OPM-0403
BY: William Staehlin
DATE: 01-26-2024
CALIFORNIA BUILDING CODE, 2022

1. PRODUCTS FROM MANUFACTURERS ARE TO MEET THE MINIMUM TABULATED DESIGN TENSION VALUES.
2. WHEN USED AT SEISMIC VERTICAL SUPPORT LOCATIONS, C-CLAMPS REQUIRE RETAINING STRAPS.

STRUCTURAL ENGINEER OF RECORD TO VERIFY ADEQUACY OF FLOOR/ROOF BEAMS FOR THE ACTUAL LOADING COMBINATIONS.

NO ATTACHMENTS IN PROTECTED ZONES AS DEFINED IN AISC 341

BEAM CLAMP ATTACHMENT TO WIDE FLANGE BEAM

REGISTERED PROFESSIONAL ENGINEER MARCIN WASAZNIK S 6612 STRUCTURAL STATE OF CALIFORNIA

ISAT
A Division of Tomarco Contractor Specialties
International Seismic Application Technology
14848 Northam Street, La Mirada, CA 90638
877-999-4728 (Toll Free) 714-523-0845 (fax)
www.isatsb.com

Rev. 8
10/05/18

Page
G7.13.1

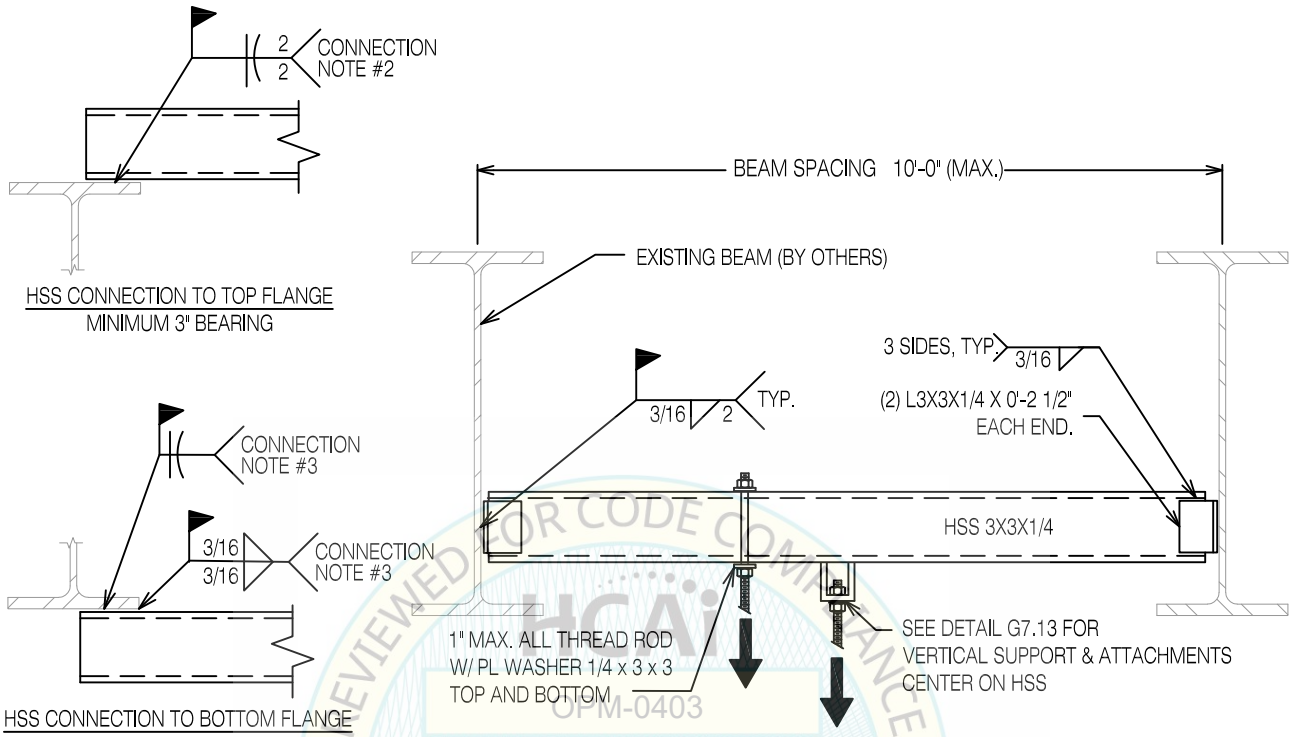

REVIEWED FOR CODE COMPLIANCE
OPM-0403
BY: William Staehlin
DATE: 01-26-2024

MULTIPLE VERTICAL LOADS MAY BE ATTACHED TO BOTTOM OF HSS.
SUM OF LOADS NOT EXCEED THE MAX. TOTAL VERTICAL LOAD

BEAM SPACING	MAX. TOTAL VERTICAL LOAD
10'-0"	2200 LBS.
8'-0"	2800 LBS.
6'-0"	3200 LBS.

CONNECTION NOTES:

1. HSS SUPPLEMENTAL BEAM MAY BE SET AT ANY ELEVATION WITHIN THE DEPTH OF THE BEAM (DO NOT COPE ENDS).
2. HSS MAY BE PLACED ON TOP OF THE TOP FLANGE WITH 3" MINIMUM BEARING ON EACH END.
USE (2) 3/16" X 2" BEVEL WELDS AT THE HSS CORNERS.
3. HSS MAY BE PLACED AT THE BOTTOM OF THE BOTTOM FLANGE WITH 3" OF OVERLAP ON EACH END.
USE 3/16" BEVEL WELDS AT THE HSS CORNERS AND 3/16" FILLET WELDS ACROSS THE END AND BEAM FLANGE.

STRUCTURAL ENGINEER OF RECORD TO VERIFY ADEQUACY OF FLOOR/ROOF BEAMS AND DIAPHRAM FOR THE ACTUAL LOADING COMBINATIONS.

STRUCTURAL ENGINEER OF RECORD TO VERIFY ADEQUACY OF FLOOR/ROOF BEAMS FOR THE ACTUAL LOADING COMBINATIONS.

HSS 3X3 SUPPLEMENTAL STEEL VERTICAL SUPPORT CONNECTION

REGISTERED PROFESSIONAL ENGINEER
MARCIN WASAZNIK
S 6612
STRUCTURAL
STATE OF CALIFORNIA

ISAT
A Division of Tomarco Contractor Specialties
International Seismic Application Technology
14848 Northam Street, La Mirada, CA 90638
877-999-4728 (Toll Free) 714-523-0845 (fax)
www.isatsb.com

Rev. 8
10/5/18

Page
G7.14

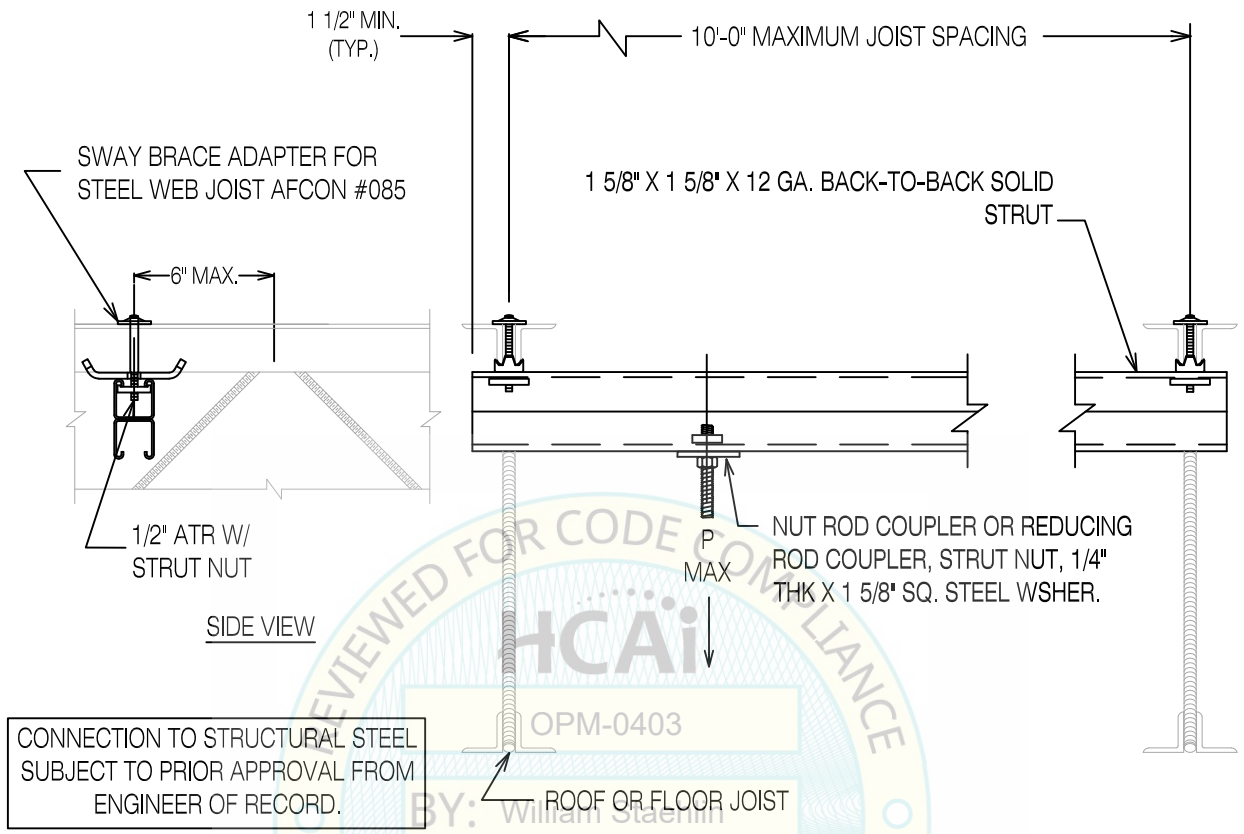

MAXIMUM VERTICAL SUPPORT LOAD

JOIST SPACING	MAX. TOTAL VERTICAL LOAD	
	SOLID STRUT	SLOTTED STRUT
6' - 0"	700 LBS	600 LBS
8' - 0"	500 LBS	400 LBS
10' - 0"	350 LBS	300 LBS

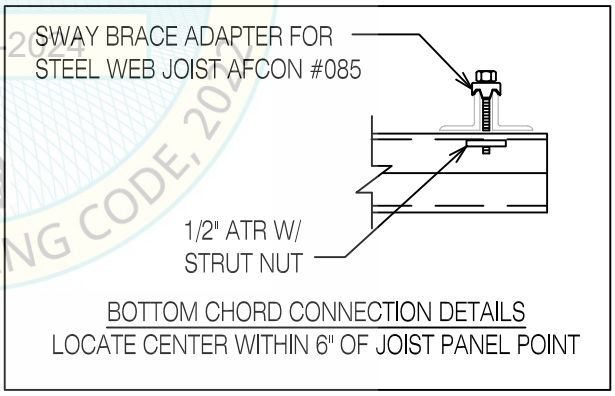

BOTTOM CHORD CONNECTION DETAILS
LOCATE CENTER WITHIN 6" OF JOIST PANEL POINT

REVIEWED FOR CODE COMPLIANCE
HCAi
OPM-0403
BY: William Staehlin
DATE: 01-26-2024
CALIFORNIA BUILDING CODE, 2019

STRUT CONNECTION TO STEEL BAR JOIST
VERTICAL SUPPORT CONNECTION

REGISTERED PROFESSIONAL ENGINEER
MARCIN WASAZNIK
S 6612
STRUCTURAL
STATE OF CALIFORNIA

ISAT
A Division of Tomarco Contractor Specialties

International Seismic Application Technology
14848 Northam Street, La Mirada, CA 90638
877-999-4728 (Toll Free) 714-523-0845 (fax)
www.isatsb.com

Rev. 7
02/20/18

Page
G7.15

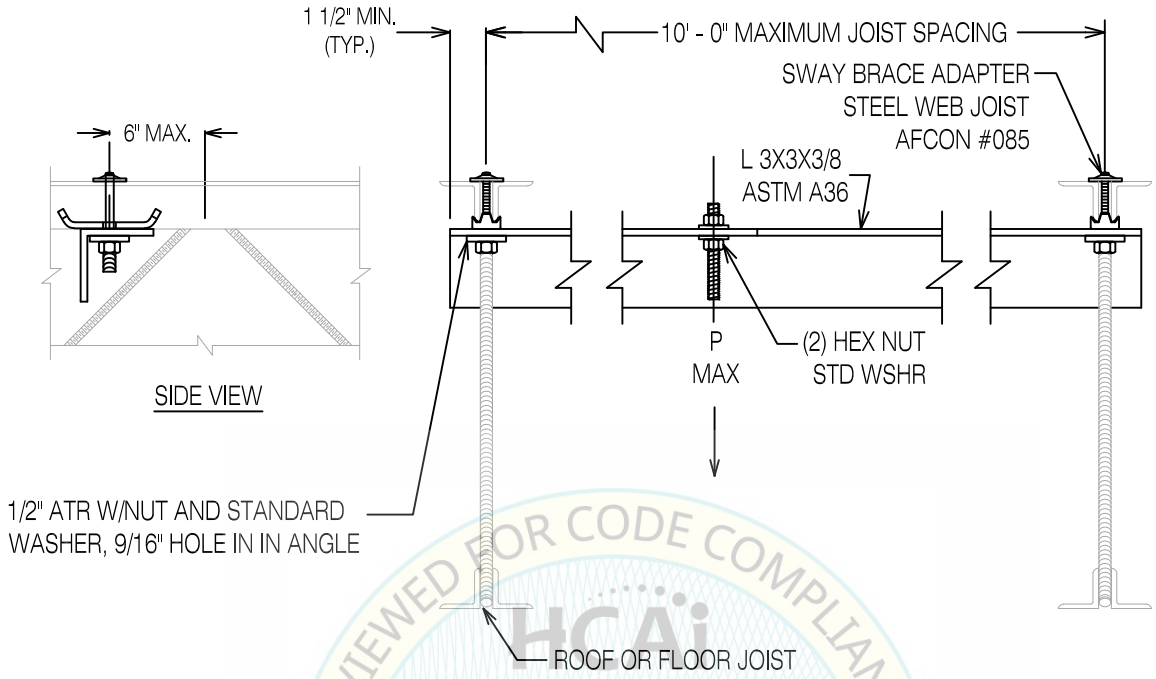

REVIEWED FOR CODE COMPLIANCE
HCAi
OPM-0403
BY: William Staehlin
DATE: 01-26-2024
CALIFORNIA BUILDING CODE 2022

VERTICAL SUPPORT LOAD

JOIST SPACING	MAX. TOTAL VERTICAL LOAD
10' - 0"	600 LBS
8' - 0"	800 LBS
6' - 0"	1,100 LBS

1. CONNECTION TO STRUCTURAL STEEL SUBJECT TO PRIOR APPROVAL FROM ENGINEER OF RECORD.
2. JOIST BRIDGING, CHORD BENDING AND TRANSFER OF LOADS INTO THE STRUCTURAL DIAPHRAGM ARE TO BE DESIGNED BY THE ENGINEER OF RECORD.

STRUCTURAL ANGLE AT STEEL BAR JOIST VERTICAL SUPPORT CONNECTION

REGISTERED PROFESSIONAL ENGINEER
MARCIN WASAZNIK
S 6612
STRUCTURAL
STATE OF CALIFORNIA

ISAT
A Division of Tomarco Contractor Specialties
International Seismic Application Technology
14848 Northam Street, La Mirada, CA 90638
877-999-4728 (Toll Free) 714-523-0845 (fax)
www.isatsb.com

Rev. 7
02/20/18

Page
G7.16

STRUCTURAL ENGINEER OF RECORD IS TO VERIFY THE CAPACITY OF THE DECK AND THE STRUCTURE FOR THE LOADS SHOWN

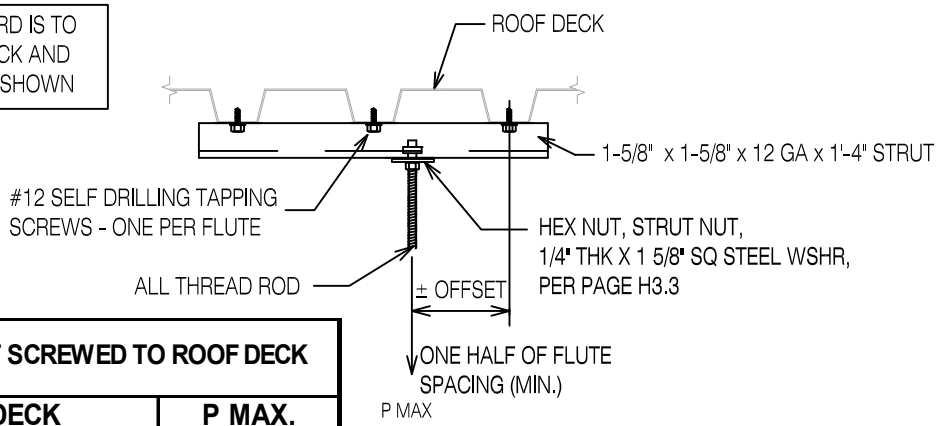

STRUT SCREWED TO ROOF DECK	
DECK THICKNESS	**P MAX. LBS.**
33 MIL (20 GAGE)	190
43 MIL (18 GAGE)	245
54 MIL (16 GAGE)	300

DETAIL 1 - SINGLE STRUT SCREWED DIRECTLY TO ROOF DECK

REVIEWED FOR CODE COMPLIANCE
HCAI
OPM-0403
BY: William Staehlin
DATE: 01-26-2024
CALIFORNIA BUILDING CODES

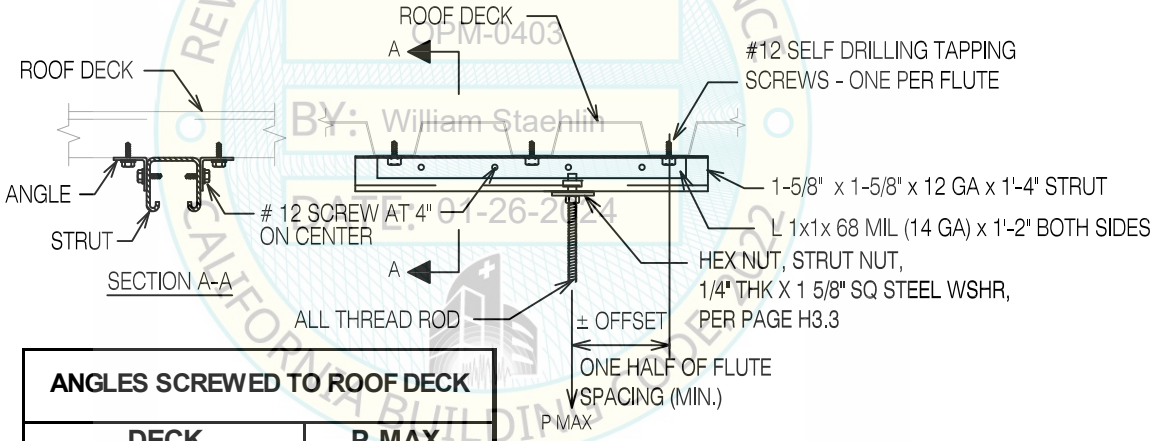

ANGLES SCREWED TO ROOF DECK	
DECK THICKNESS	**P MAX. LBS.**
33 MIL (20 GAGE)	380
43 MIL (18 GAGE)	490
54 MIL (16 GAGE)	600

DETAIL 2 - SINGLE STRUT WITH ANGLES ON BOTH SIDES

ROOF DECK VERTICAL SUPPORT CONNECTION

ISAT
A Division of Tomarco Contractor Specialties
International Seismic Application Technology
14848 Northam Street, La Mirada, CA 90638
877-999-4728 (Toll Free) 714-523-0845 (fax)
www.isatsb.com

Rev. 7
02/22/18

Page
G7.17

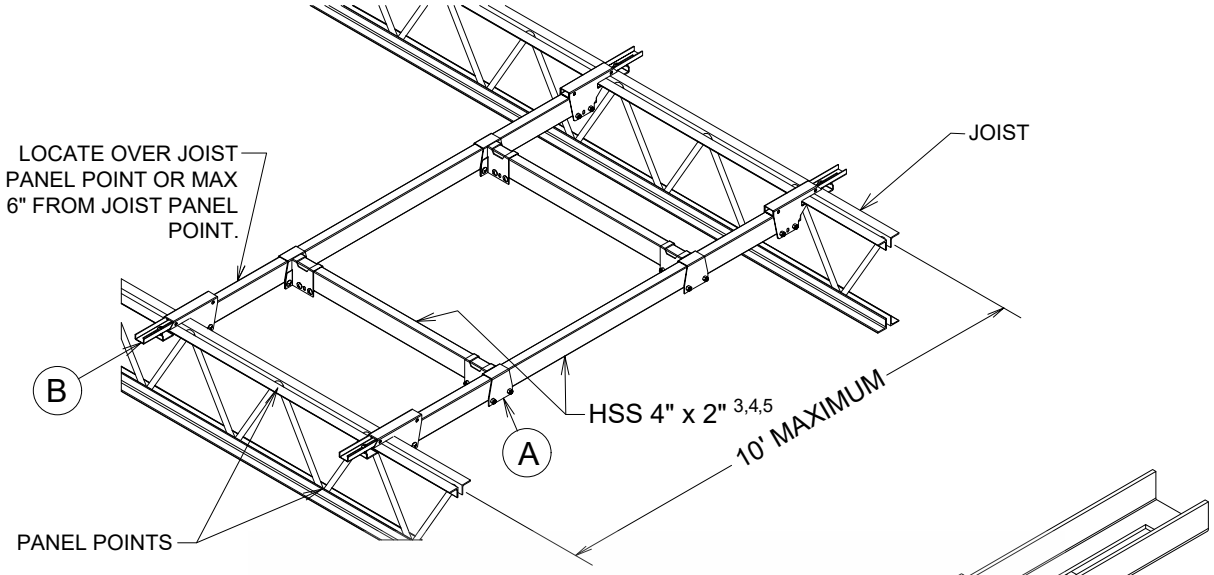

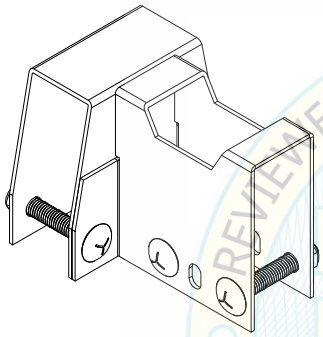

A 4" T-BRACKET - ISO VIEW
REFER TO PAGE H4.20

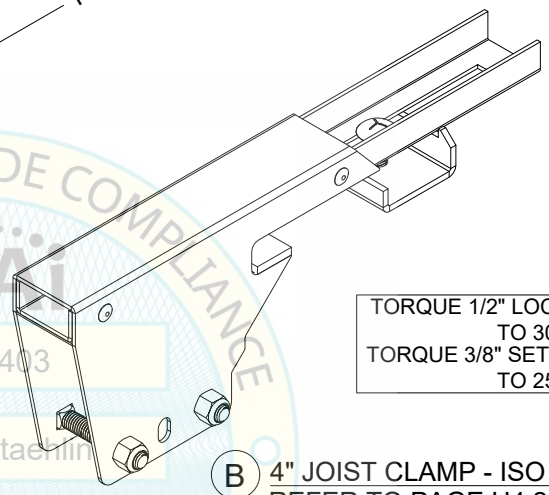

TORQUE 1/2" LOCKNUTS TO 30 FT-LBS
TORQUE 3/8" SETSCREW TO 25 FT-LBS

B 4" JOIST CLAMP - ISO VIEW
REFER TO PAGE H4.20

REVIEWED FOR CODE COMPLIANCE
HCAI
OPM-0403
BY: William Staehlin
DATE: 01-26-2024
CALIFORNIA BUILDING CODE 2022

CHICAGO CLAMP CO. MAXIMUM DESIGN LOADS (ASD)							
PART NUMBER	T-BRACKET / JOIST CLAMP (IN)	T-BRACKET [1,2]			JOIST CLAMP [1,2]		
		Fx (lbs)	Fy (lbs)	Fz (lbs)	Fx (lbs)	Fy (lbs)	Fz (lbs)
JG FCS	4	431	430	531	397	563	441

1. FACTOR OF SAFETY: 2.0
2. MATERIAL: CARBON STEEL
3. STRUCTURAL ENGINEER OF RECORD SHALL DETERMINE HSS WALL THICKNESS SUBJECT TO CODE LOAD REQUIREMENTS ABD DEFLECTION LIMITATIONS.
4. INSTALL PER MANUFACTURER'S INSTRUCTIONS IN INSTALLATION GUIDE.
5. HSS ASTM A500, GRADE B OR BETTER.
6. ENVIRONMENTAL FACTORS, e.g. WIND, SNOW, RAIN/FLOODS, ECT., ARE BEYOND THE SCOPE OF THE OPM.

4 INCH TUBE FRAMING CLAMP SYSTEM

STRUCTURAL ENGINEER OF RECORD IS TO VERIFY THE ADEQUACY OF THE EXISTING BEAMS AND DIAPHRAGM.

REGISTERED PROFESSIONAL ENGINEER
MARCIN WASAZNIK
S-6612
STRUCTURAL
STATE OF CALIFORNIA

ISAT
A Division of Tomarco Contractor Specialties
International Seismic Application Technology
14848 Northam Street, La Mirada, CA 90638
877-999-4728 (Toll Free) 714-523-0845 (fax)
www.isatsb.com

Rev. 1
09/12/23

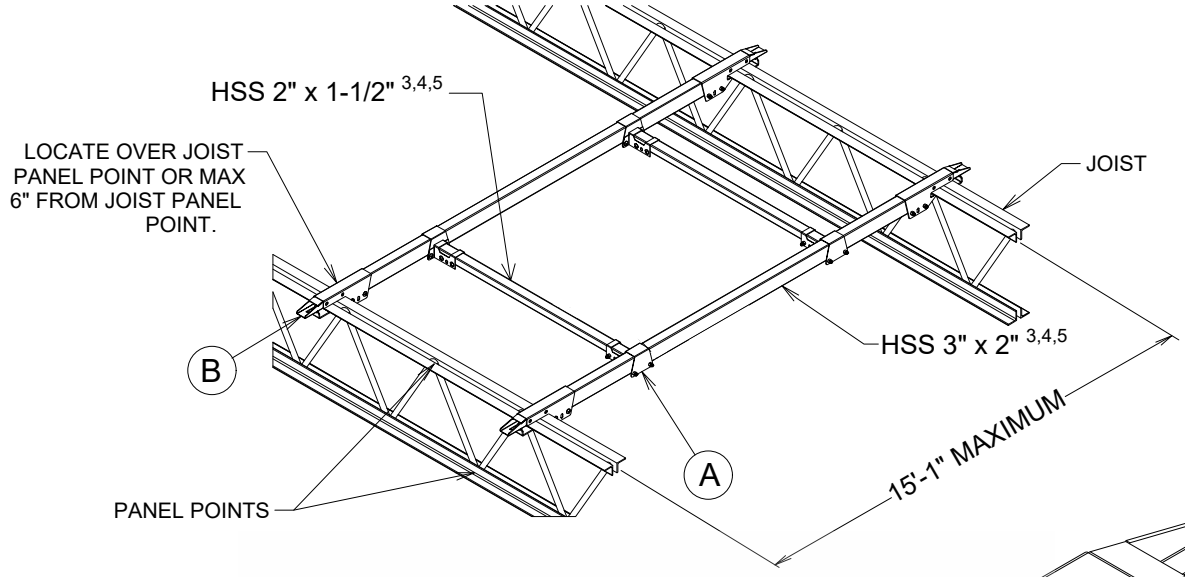

INSTALLATION ISO VIEW

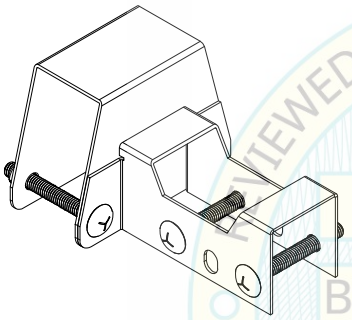

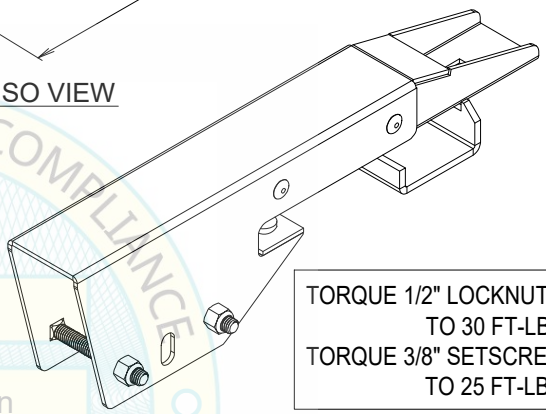

TORQUE 1/2" LOCKNUTS TO 30 FT-LBS
TORQUE 3/8" SETSCREW TO 25 FT-LBS

A 3" T-BRACKET - ISO VIEW
REFER TO PAGE H4.20.1
FOR ALL ATTACHMENTS

B 3" JOIST CLAMP - ISO VIEW
REFER TO PAGE H4.20.1
FOR ALL ATTACHMENTS

REVIEWED FOR CODE COMPLIANCE
HCAi
OPM-0403
BY: William Staehlin
DATE: 01-26-2024
CALIFORNIA BUILDING CODE 2022

CHICAGO CLAMP CO. MAXIMUM DESIGN LOADS (ASD)							
PART NUMBER	T-BRACKET / JOIST CLAMP (IN)	T-BRACKET[1,2]			JOIST CLAMP[1,2]		
		Fx (lbs)	Fy (lbs)	Fz (lbs)	Fx (lbs)	Fy (lbs)	Fz (lbs)
3 INCH FCS	3	1,010	685	465	407	536	951

1. FACTOR OF SAFETY: 2.0
2. MATERIAL: CARBON STEEL
3. STRUCTURAL ENGINEER OF RECORD SHALL DETERMINE HSS WALL THICKNESS SUBJECT TO CODE LOAD REQUIREMENTS ABD DEFLECTION LIMITATIONS.
4. INSTALL PER MANUFACTURER'S INSTRUCTIONS IN INSTALLATION GUIDE.
5. HSS ASTM A500, GRADE B OR BETTER.
6. ENVIRONMENTAL FACTORS, e.g. WIND, SNOW, RAIN/FLOODS, ECT., ARE BEYOND THE SCOPE OF THE OPM.

3 INCH TUBE FRAMING CLAMP SYSTEM

STRUCTURAL ENGINEER OF RECORD IS TO VERIFY THE ADEQUACY OF THE EXISTING BEAMS AND DIAPHRAGM.

REGISTERED PROFESSIONAL ENGINEER
MARCIN WASAZNIK
S-6612
STRUCTURAL
STATE OF CALIFORNIA

ISAT
A Division of Tomarco Contractor Specialties

International Seismic Application Technology
14848 Northam Street, La Mirada, CA 90638
877-999-4728 (Toll Free) 714-523-0845 (fax)
www.isatsb.com

Rev. 1
09/12/23

Page
G7.19.1

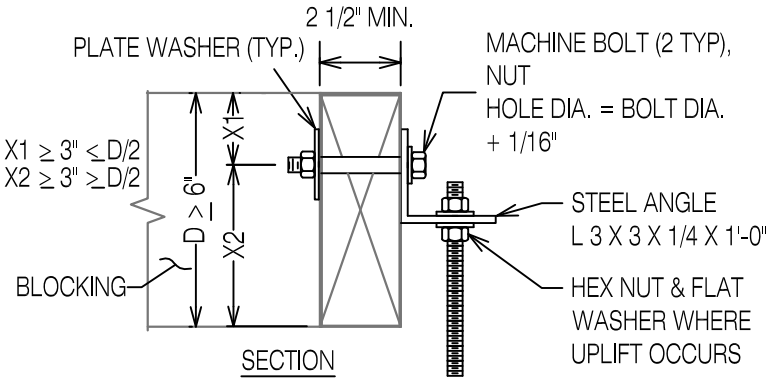

SECTION

TWO BOLT

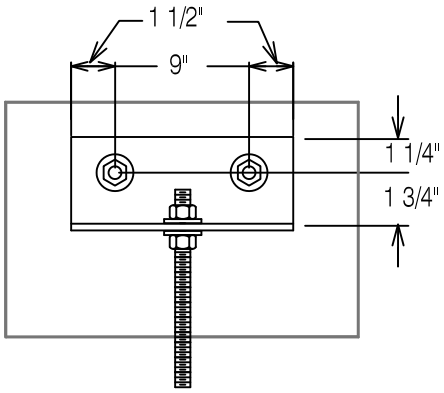

SIDE VIEW - PERPENDICULAR

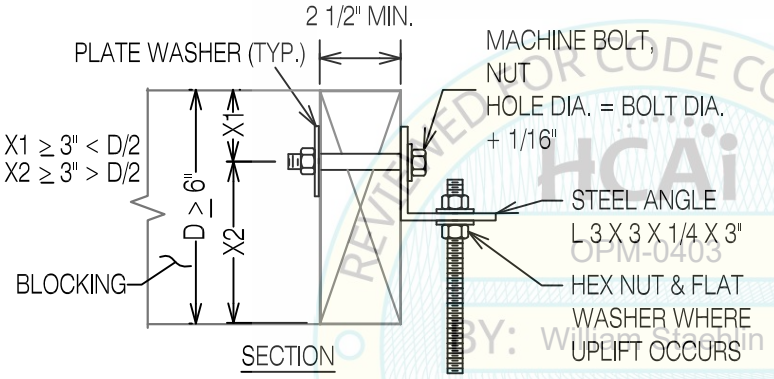

SECTION

SINGLE BOLT

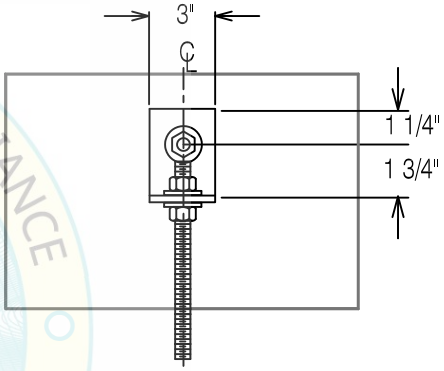

SIDE VIEW - PERPENDICULAR

REVIEWED FOR CODE COMPLIANCE
HCAi
OPM-0403
BY: William Staehlin
DATE: 01-26-2024
CALIFORNIA BUILDING CODE, 2022

WOOD SPECIES SPECIFIC GRAVITY G=0.50 MIN.
PLATE WASHER REQ'D UNDER BOLT HEAD OR NUT BEARING ON WOOD.
REFER TO INSTALLATION REQUIREMENTS PAGE D6.1.

NOTE: ENGINEER OF RECORD TO CONFIRM SUITABILITY OF STRUCTURE TO ACCOMMODATE THE LOADS SHOWN BELOW.

MAXIMUM ALLOWABLE VERTICAL LOAD		
BOLT DIAMETER Inch	1 BOLT Lbs.	2 BOLT Lbs.
1/2	410	650
5/8	470	750
3/4	530	900

DESIGN AND DETAILING OF BLOCKING REQUIRED FOR STRUCTURAL STABILITY AND TIES TO HORIZONTAL DIAPHRAGM ARE TO BE BY THE STRUCTURAL ENGINEER OF RECORD (TYP OF ALL CONFIGURATIONS).

THRU BOLT VERTICAL SUPPORT CONNECTIONS TO STRUCTURAL LUMBER

REGISTERED PROFESSIONAL ENGINEER
MARCIN WASAZNIK
S 6612
STRUCTURAL
STATE OF CALIFORNIA

ISAT
A Division of Tomarco Contractor Specialties

International Seismic Application Technology
14848 Northam Street, La Mirada, CA 90638
877-999-4728 (Toll Free) 714-523-0845 (fax)
www.isatsb.com

Rev. 7
02/20/18

Page
G8.30

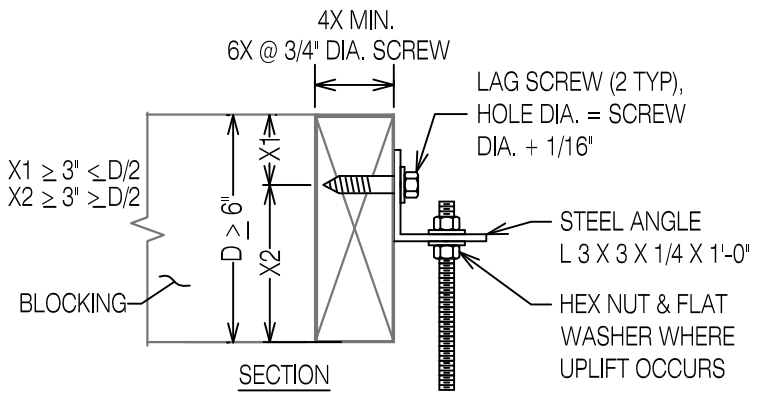

SECTION

TWO BOLT

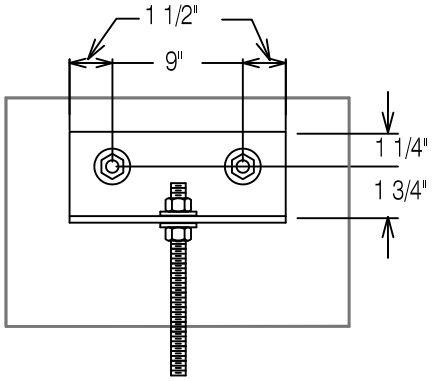

SIDE VIEW - PERPENDICULAR

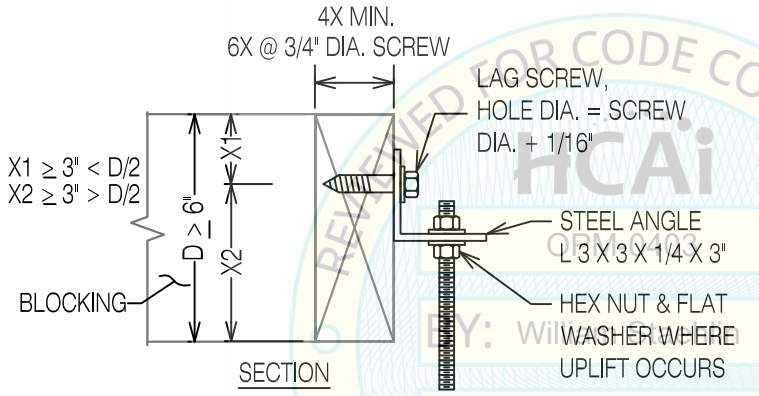

SECTION

SINGLE BOLT

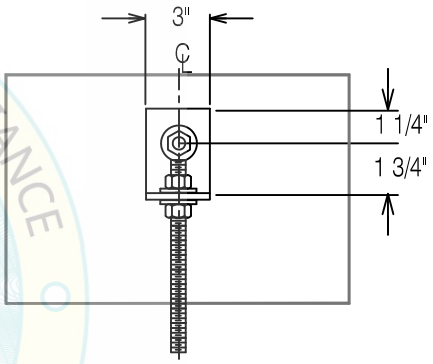

SIDE VIEW - PERPENDICULAR

REVIEWED FOR CODE COMPLIANCE
HCAi
OPM-0403
BY: William Staehlin
DATE: 01-26-2024
CALIFORNIA BUILDING CODE, 2022

WOOD SPECIES SPECIFIC GRAVITY G=0.50 MIN.
REFER TO INSTALLATION REQUIREMENTS PAGE D6.1.

NOTE: ENGINEER OF RECORD TO CONFIRM SUITABILITY OF STRUCTURE TO ACCOMMODATE THE LOADS SHOWN BELOW.

MAXIMUM ALLOWABLE VERTICAL LOAD		
LAG SCREW Inch	1 SCREW Lbs.	2 SCREWS Lbs.
1/2 X 3 1/2	230	460
5/8 X 3 1/2	250	500
3/4 X 5 1/2	470	940

DESIGN AND DETAILING OF BLOCKING REQUIRED FOR STRUCTURAL STABILITY AND TIES TO HORIZONTAL DIAPHRAGM ARE TO BE BY THE STRUCTURAL ENGINEER OF RECORD (TYP OF ALL CONFIGURATIONS).

LAG SCREW VERTICAL SUPPORT CONNECTIONS TO STRUCTURAL LUMBER

ISAT
A Division of Tomarco Contractor Specialties
International Seismic Application Technology
14848 Northam Street, La Mirada, CA 90638
877-999-4728 (Toll Free) 714-523-0845 (fax)
www.isatsb.com

Rev. 7
02/20/18

Page
G8.31

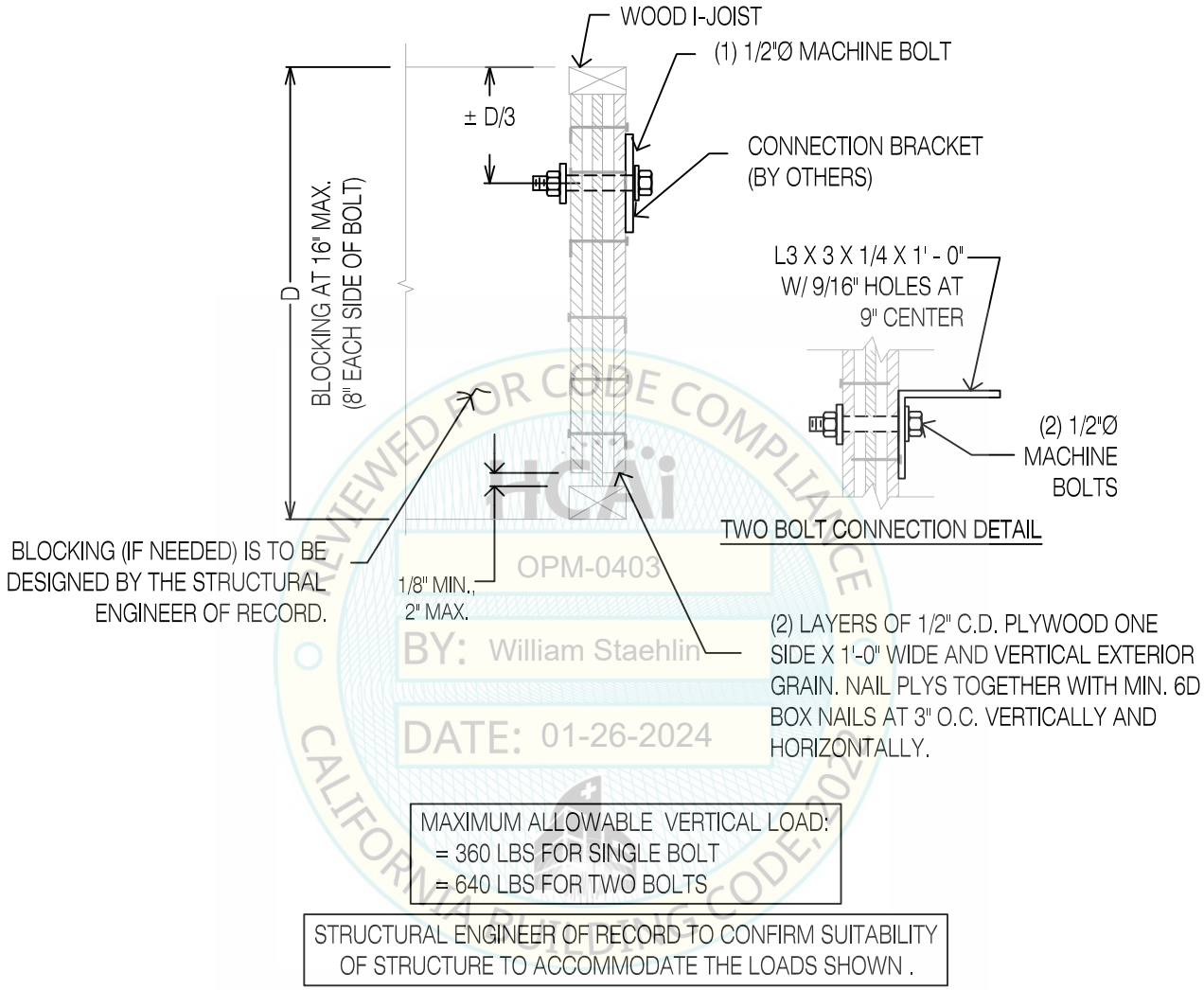

REVIEWED FOR CODE COMPLIANCE
HCAi
OPM-0403
BY: William Staehlin
DATE: 01-26-2024
CALIFORNIA BUILDING CODE, 2022

MAXIMUM ALLOWABLE VERTICAL LOAD:
= 360 LBS FOR SINGLE BOLT
= 640 LBS FOR TWO BOLTS

STRUCTURAL ENGINEER OF RECORD TO CONFIRM SUITABILITY OF STRUCTURE TO ACCOMMODATE THE LOADS SHOWN .

VERTICAL SUPPORT CONNECTION TO TJI WOOD JOIST

REGISTERED PROFESSIONAL ENGINEER
MARCIN WASAZNIK
S 6612
STRUCTURAL
STATE OF CALIFORNIA

ISAT
A Division of Tomarco Contractor Specialties

International Seismic Application Technology
14848 Northam Street, La Mirada, CA 90638
877-999-4728 (Toll Free) 714-523-0845 (fax)
www.isatsb.com

Rev. 7
02/20/18

Page
G8.32

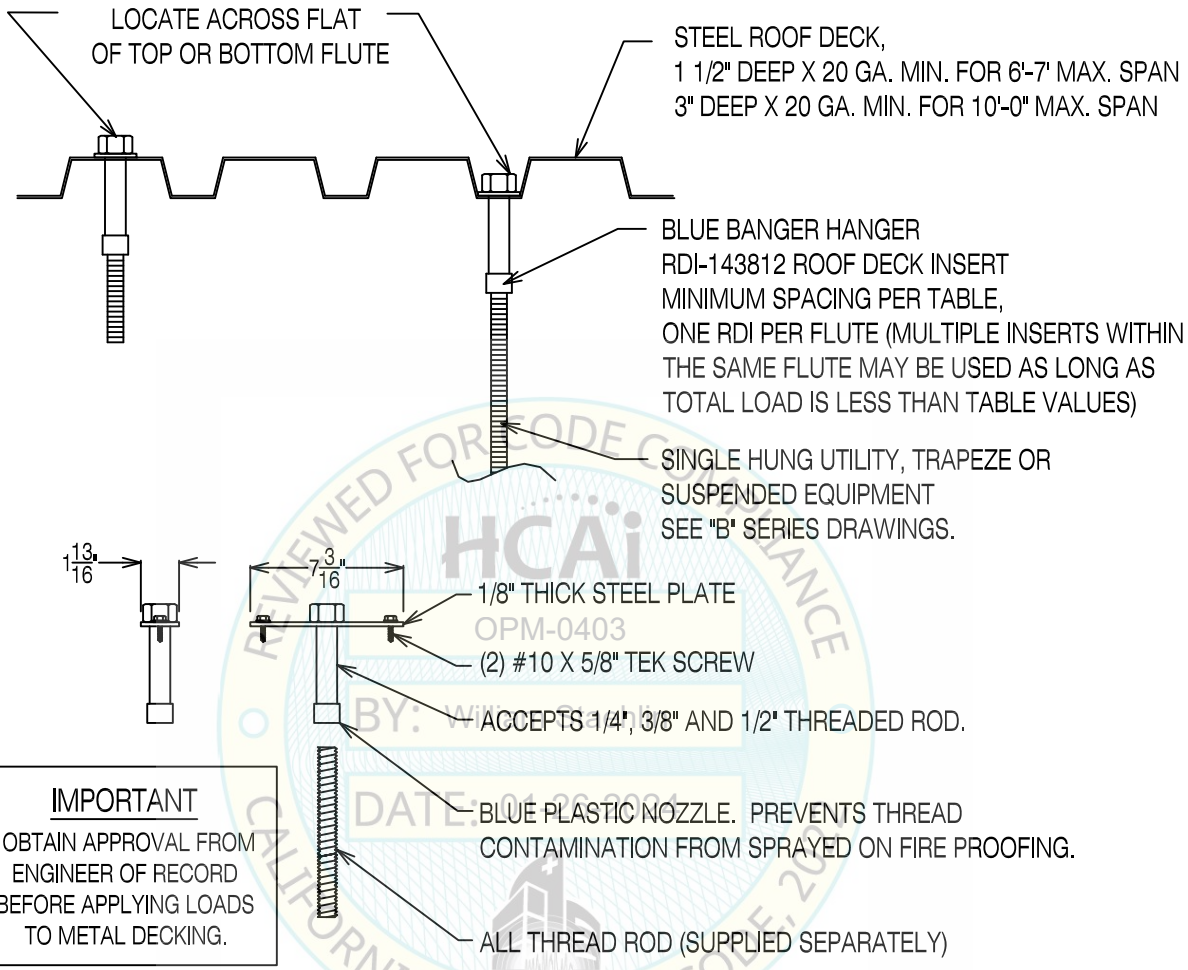

IMPORTANT

OBTAIN APPROVAL FROM ENGINEER OF RECORD BEFORE APPLYING LOADS TO METAL DECKING.

SPACING (in)	LOAD (lbs)[1]
24	300
18	250
12	200
6	110

1. DESIGN VALUE (VERTICAL SUPPORT LOADS ONLY), MAXIMUM PER INSERT.

BLUE BANGER HANGER "RDI-143812" ROOF DECK INSERT VERTICAL SUPPORT APPLICATIONS

REGISTERED PROFESSIONAL ENGINEER MARCIN WASAZNIK S-6612 STRUCTURAL STATE OF CALIFORNIA

ISAT
A Division of Tomarco Contractor Specialties

International Seismic Application Technology
14848 Northam Street, La Mirada, CA 90638
877-999-4728 (Toll Free) 714-523-0845 (fax)
www.isatsb.com

Rev. 8
10/10/23

Page
G10.1

REVIEWED FOR CODE COMPLIANCE
HCAi
OPM-0403
BY: William Staehlin
DATE: 01/26/2024
CALIFORNIA BUILDING CODE, 2022

INDEX - GENERAL HARDWARE

PAGE	DESCRIPTION
	ROD CHARACTERISTICS
H1	ALL-THREAD ROD TENSION DESIGN VALUES FOR PIPING SYSTEMS VERTICAL SUPPORTS
H1.1	ALL-THREAD ROD TENSION DESIGN VALUES FOR TRAPEZED ELECTRICAL SYSTEMS
H1.2	THREADED FASTENER TENSION AND SHEAR DESIGN VALUES
	STRUT CHANNELS
H2	CHANNEL PROFILE DESIGNATIONS AND SECTION VALUES
H2.1	PHD BRAND CHANNEL PROFILE DESIGNATIONS AND SECTION VALUES
	PHD HARDWARE
H3.1	PHD FIG. 2000 SERIES 2-PIECE TRAPEZE CLAMP - FOR USE WITH STEEL PIPE ≥ SCH 10 OR RMC CONDUIT
H3.1.1	1 PIECE PHD TRAPEZE CLAMP - FOR USE WITH CAST IRON PIPING
H3.1.2	PHD SERIES 7200, 1-PIECE STANDARD PIPE STRAP - FOR USE WITH STEEL PIPE ≥ SCH 10 OR RMC CONDUIT
H3.1.3	PHD SERIES 7200, 1-PIECE STANDARD PIPE STRAP - FOR USE WITH EMT
H3.1.4	PHD FIG. 035 SWAY BRACE BAR JOIST ADAPTER
H3.1.5	PHD FIG. 045 SWAY BRACE STRUCTURAL ADAPTER
H3.1.6	2 PIECE PHD TRAPEZE CLAMP - FOR USE WITH EMT
H3.1.10	2 PIECE PHD TRAPEZE CLAMP WITH EPOXY - FOR USE WITH COPPER
H3.1.11	2 PIECE PHD TRAPEZE CUSH CLAMP - FOR USE WITH COPPER
H3.2	FASTENERS - GENERAL
H3.3	STRUT NUTS, SQUARE WASHERS
	SCREW STRENGTHS / DESIGN VALUES
H3.8	SCREW SHEAR DESIGN VALUES
H3.8.1	SCREW SHEAR DESIGN VALUES FOR METAL STUDS, JOISTS AND ACCESSORIES
H3.9	SCREW TENSION DESIGN VALUES
H3.9.1	SCREW TENSION DESIGN VALUES FOR METAL STUDS, JOISTS AND ACCESSORIES
H3.10	SCREW SHEAR DESIGN VALUES FOR GYPSUM WALL BOARD.
	SEISMIC TUNING FORK (STF) ACCESSORIES
H4	SEISMIC TUNING FORK SPACER
H4.20	4 INCH TUBE FRAMING CLAMP SYSTEM
H4.20.1	3 INCH TUBE FRAMING CLAMP SYSTEM
H5.1	SROH-1-50/1000 SPRING ASSEMBLY
H5.2	SROH-1-1250/2865 SPRING ASSEMBLY

REVIEWED FOR CODE COMPLIANCE
ICAi
OPM-0403
BY: William Staehlin
DATE: 01-26-2024
CALIFORNIA BUILDING CODE, 2022

REGISTERED PROFESSIONAL ENGINEER
MARCIN WASAZNIK
S 6612
STRUCTURAL
STATE OF CALIFORNIA

ISAT
A Division of Tomarco Contractor Specialties

International Seismic Application Technology
14848 Northam Street, La Mirada, CA 90638
877-999-4728 (Toll Free) 714-523-0845 (fax)
www.isatsb.com

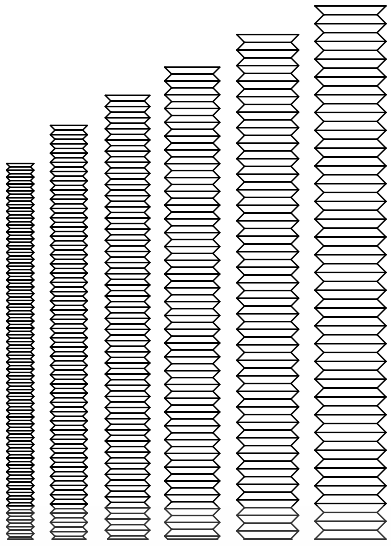

Rod Diameter Inch	Min. ASTM A36 Steel	
	High Temperature Applications Maximum Tension Design Value Lbs	Building Services Piping Maximum Tension Design Value Lbs
3/8	730	790
1/2	1,350	1,460
5/8	2,160	2,340
3/4	3,230	3,500
7/8	4,480	4,860
1	5,900	6,400
1-1/8	6,230	8,000
1-1/4	9,500	10,300
1-3/8	9,500	12,180
1-1/2	13,800	14,960
1-3/4	18,600	20,180
2	24,600	26,680
	ASME B31.1 Rod Temp of 650 Deg.	ASME B31.9

REVIEWED FOR CODE COMPLIANCE
HCAI
OPM-0403
BY: William Staehlin
DATE: 01-26-2024
CALIFORNIA BUILDING CODE

ALL-THREAD ROD MAXIMUM TENSION DESIGN VALUES

PIPING SYSTEM VERTICAL SUPPORTS

REGISTERED PROFESSIONAL ENGINEER
MARCIN WASAZNIK
S-6612
STRUCTURAL
STATE OF CALIFORNIA

ISAT
A Division of Tomarco Contractor Specialties

International Seismic Application Technology
14848 Northam Street, La Mirada, CA 90638
877-999-4728 (Toll Free) 714-523-0845 (fax)
www.isatsb.com

Rev. 9
09/07/18

Page
H1

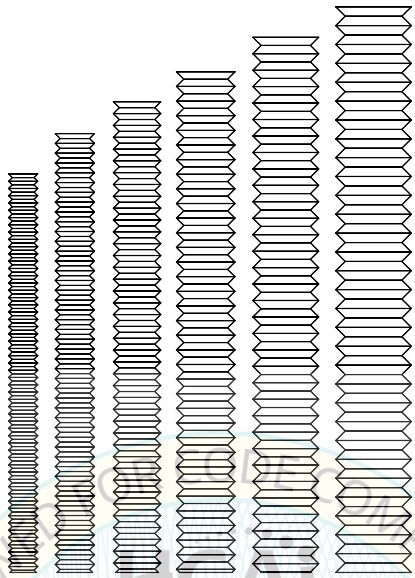

Min. ASTM A36 Steel	
Rod Diameter IN	Maximum Tension Design Value LBS
3/8	2,400
1/2	4,270
5/8	6,670
3/4	9,600
7/8	13,070
1	17,080
1-1/8	16,700
1-1/4	20,600
1-3/8	25,000
1-1/2	29,700
1-3/4	40,400
2	52,800

REVIEWED FOR CODE COMPLIANCE
HCAI
OPM-0403
BY: William Staehlin
DATE: 01-26-2024
CALIFORNIA BUILDING CODE, 2022

ALL-THREAD ROD MAXIMUM TENSION DESIGN VALUES EXCEPT PIPING SYSTEMS

REGISTERED PROFESSIONAL ENGINEER
MARCIN WASAZNIK
S-6612
STRUCTURAL
STATE OF CALIFORNIA

ISAT
A Division of Tomarco Contractor Specialties

International Seismic Application Technology
14848 Northam Street, La Mirada, CA 90638
877-999-4728 (Toll Free) 714-523-0845 (fax)
www.isatsb.com

THREADED FASTENER DESIGN VALUES [1]					
Fastener Diameter (in)	Tension (lbs)	Shear (lbs)	Combined[2] Tension and Shear (lbs) @ 45°[4]	Combined[2] Tension and Shear (lbs) @ 30°[4]	Combined[2] Tension and Shear (lbs) @ 60°[4]
1/4	884	490	600[3]	585[3]	650[3]
3/8	1,988	1,104	1360[3]	1315[3]	1510[3]
1/2	4,270	2,560	2,900	2,850	3,265
5/8	6,670	4,000	5,500	5,100	6,800
3/4	9,600	5,765	6,500	6,400	7,200
7/8	13,070	7,845	9,000	8,700	10,000
1	17,080	10,250	11,700	11,400	13,000
1 1/8	21,600	12,970	14,900	14,400	16,500
1 1/4	26,700	16,000	18,400	17,800	20,500
1 3/8	32,300	19,375	22,200	21,000	24,700
1 1/2	38,400	23,060	26,400	25,000	29,400
1 3/4	52,300	31,390	36,000	34,000	40,000
2	68,300	40,995	47,100	45,700	52,000

1. ASTM A307 BOLTS OR ASTM A36 ALL THREAD RODS.

2. AISC SECTION J3.7 AND EQ. J3-3B ARE USED FOR COMBINED TENSION AND SHEAR CALCULATIONS BASED ON AN APPLIED LOAD.

3. AISI SECTION E3.4 & TABLE E3.4-1 ARE USED FOR COMBINED TENSION AND SHEAR CALCULATIONS BASED ON APPLIED LOAD.

4. ANGLE MEASURED FROM HORIZONTAL.

REVIEWED FOR CODE COMPLIANCE
HCAi
OPM-0403
BY: William Staehlin
DATE: 01-26-2024
CALIFORNIA BUILDING CODE, 2022

THREADED FASTENER DESIGN VALUES

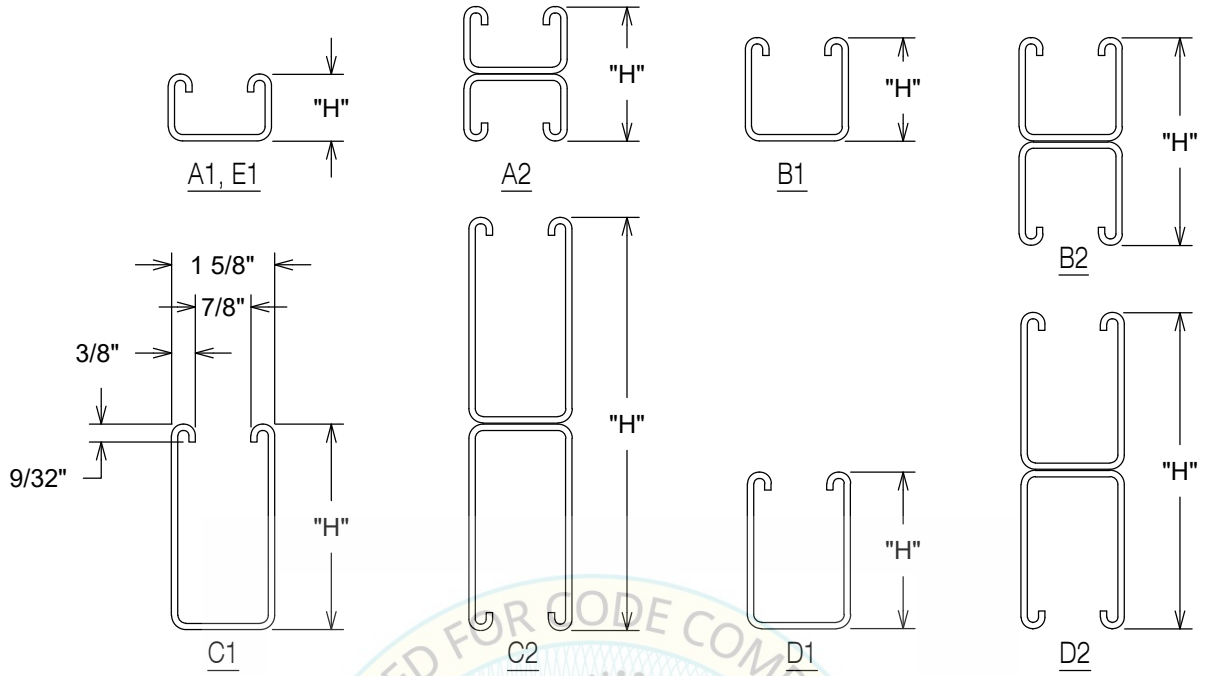

Channel	Steel Gage	Height "H" Inch	Area Of Section Inch ^{2}	MINIMUM ELEMENTS OF SECTION (For Solid) X-X AXIS Moment of Inertia Inch ^{4}	X-X AXIS Section Modulus Inch ^{3}	X-X AXIS Radius of Gyration Inch	Y-Y AXIS Moment of Inertia Inch ^{4}	Y-Y AXIS Section Modulus Inch ^{3}	Y-Y AXIS Radius of Gyration Inch
A1	12	13/16	0.376	0.031	0.064	0.283	0.115	0.142	0.554
A2	12	1 5/8	0.752	0.146	0.180	0.436	0.230	0.284	0.554
B1	12	1 5/8	0.552	0.185	0.202	0.576	0.234	0.288	0.647
B2	12	3 1/4	1.104	0.928	0.571	0.914	0.468	0.576	0.647
C1	12	3 1/4	0.887	1.098	0.627	1.107	0.431	0.530	0.695
C2	12	6 1/2	1.775	6.225	1.915	1.863	0.862	1.060	0.695
D1	12	2 7/16	0.720	0.522	0.39	0.848	0.334	0.411	0.679
D2	12	4 7/8	1.439	2.805	1.151	1.390	0.667	0.82	0.679
E1	10	2	0.912	0.476	0.438	0.723	0.569	0.569	0.790

1. QUALIFIED BRANDS MEETING OR EXCEEDING ABOVE VALUES MAY BE USED SUBJECT TO ISAT REVIEW AND APPROVAL FROM ENGINEER-OF-RECORD.
2. BEAM LOAD SHALL BE LIMITED BY APPROVED SPOT WELD CAPACITY.
3. A2, B2, C2 AND D2 - FACTORY SPOT WELDED BACK-TO-BACK CHANNEL.
4. TABULATED VALUES ARE SOLID STRUT. STRUT WITH STANDARD HOLES HAVE SECTION PROPERTIES REDUCED BY 0.10. STRUT WITH SLOTS (9/16" WIDE X 1-1/8" LONG 2" OC TYP) HAVE SECTION REDUCED BY 0.15.

REVIEWED FOR CODE COMPLIANCE
OPM-0403
BY: William Staehlin
DATE: 01-26-2024
HCAI
OSHPD
CALIFORNIA BUILDING CODE 2022

CHANNEL PROFILE DESIGNATIONS AND SECTION VALUES, ASTM A653 GRADE 33

REGISTERED PROFESSIONAL ENGINEER
MARCIN WASAZNIK
S 6612
STRUCTURAL
STATE OF CALIFORNIA

ISAT
A Division of Tomarco Contractor Specialties

International Seismic Application Technology
14848 Northam Street, La Mirada, CA 90638
877-999-4728 (Toll Free) 714-523-0845 (fax)
www.isatsb.com

Rev. 10
10/10/23

Page
H2

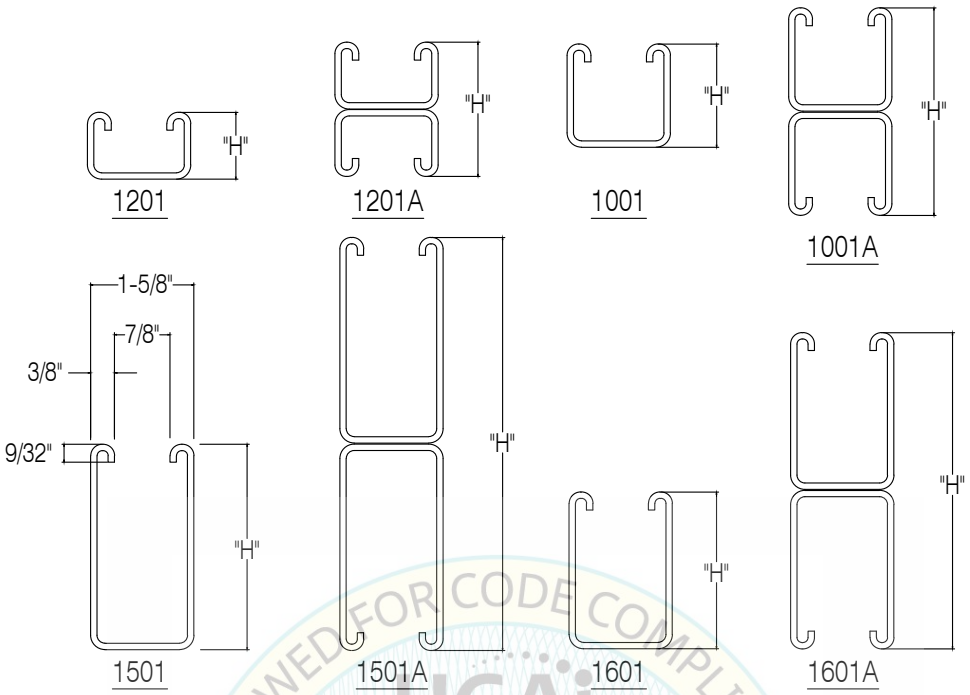

Channel	Steel Gage	Height "H" Inch	Area Of Section Inch ^{2}	MINIMUM ELEMENTS OF SECTION (For Solid)					
				X-X AXIS			Y-Y AXIS		
				Moment of Inertia Inch ^{4}	Section Modulus Inch ^{3}	Radius of Gyration Inch	Moment of Inertia Inch ^{4}	Section Modulus Inch ^{3}	Radius of Gyration Inch
1201	12	13/16	0.376	0.033	0.068	0.297	0.115	0.142	0.554
1201A	12	1 5/8	0.752	0.148	0.182	0.444	0.230	0.284	0.554
1001	12	1 5/8	0.561	0.189	0.209	0.580	0.239	0.294	0.653
1001A	12	3 1/4	1.122	0.958	0.589	0.924	0.479	0.588	0.653
1501	12	3 1/4	0.902	1.115	0.641	1.112	0.436	0.537	0.695
1501A	12	6 1/2	1.804	6.349	1.953	1.876	0.873	1.074	0.695
1601	12	2 7/16	0.732	0.531	0.401	0.852	0.338	0.416	0.680
1601A	12	4 7/8	1.464	2.874	1.179	1.401	0.676	0.832	0.680

1. BEAM LOAD MAY BE LIMITED BY SPOT WELD SHEAR. REFER TO PHD TECHNICAL DATA.
2. 1001A, 1201A, 1501A AND 1601A
3. TABULATED VALUES ARE SOLID STRUT. STRUT WITH STANDARD HOLES HAVE SECTION PROPERTIES REDUCED BY 0.10. STRUT WITH SLOTS (9/16" WIDE X 1-1/8" LONG 2"OC TYP) HAVE SECTION REDUCED BY 0.15.

'PHD' BRAND CHANNEL PROFILE DESIGNATIONS AND SECTION VALUES, ASTM A653 GRADE 33

REGISTERED PROFESSIONAL ENGINEER MARCIN WASAZNIK S-6612 STRUCTURAL STATE OF CALIFORNIA

ISAT
A Division of Tomarco Contractor Specialties
International Seismic Application Technology
14848 Northam Street, La Mirada, CA 90638
877-999-4728 (Toll Free) 714-523-0845 (fax)
www.isatsb.com

REVIEWED FOR CODE COMPLIANCE BY HCAI OPM-0403 BY William Staehlin DATE: 01-26-2024 CALIFORNIA BUILDING CODE 2022

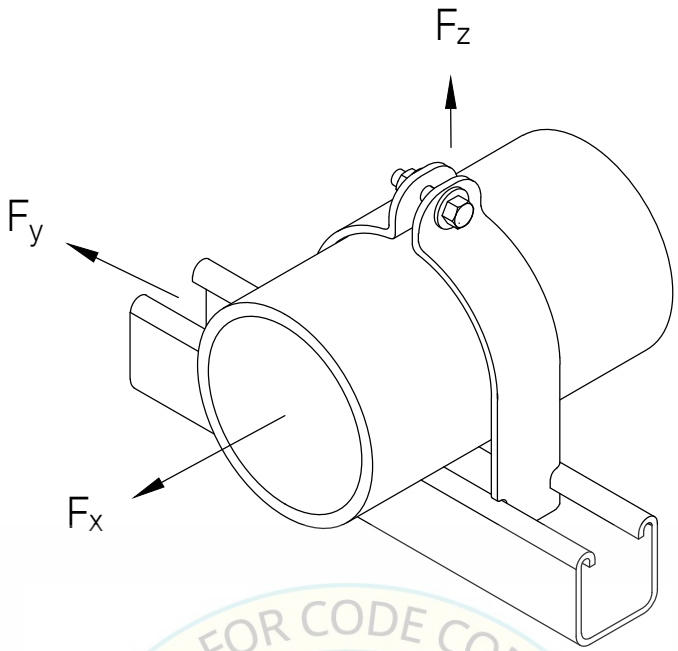

MATERIAL: CLAMP - HOT ROLLED MILD STEEL, ASTM A1011SS, GRADE 33
BOLT - ASTM A307, GRADE A
FLAT WASHER - ANSI/ASME B18.22.1

REVIEWED FOR CODE COMPLIANCE
OPM-0403
by William Staehlin
DATE: 01-26-2024
CALIFORNIA BUILDING CODE, 2022

PHD Figure Number	Nominal Pipe Size (in)	Bolt + Washer Diameter (in)	Bolt Torque (ft-lbs)	Design Loads, ASD (lbs)		
				Fx	Fy	Fz
2005	1 1/4	1/4	6	265	230	64
2006	1 1/2	5/16	14	380	215	76
2007	2	5/16	14	365	405	106
2008-38[2]	2 1/2	3/8	19	215	305	159
2009	3	5/16	14	420	310	213
2010	3 1/2	5/16	14	400	315	260
2011	4	5/16	14	440	395	351
2012	5	3/8	19	270	525	484
2013	6	3/8	19	215	360	643

1. TRAPEZE STRUT SECTIONAL PROPERTIES MUST MEET OR EXCEED THE SECTIONAL PROPERTIES ON PAGE H2.
2. A 7/16" DRILLED HOLE ON PHD FIGURE NUMBER 2008 SAMPLES TO ACCOMMODATE THE 3/8" DIAMETER BOLT.
3. FOR USE WITH STEEL PIPE AND RMC CONDUIT.
4. FACTOR OF SAFETY = 2.0

2 PIECE PHD TRAPEZE CLAMP - FOR USE WITH STEEL PIPE ≥ SCH 10 OR RMC CONDUIT

REGISTERED PROFESSIONAL ENGINEER MARCIN WASAZNIK S-6612 STRUCTURAL STATE OF CALIFORNIA

ISAT
A Division of Tomarco Contractor Specialties
International Seismic Application Technology
14848 Northam Street, La Mirada, CA 90638
877-999-4728 (Toll Free) 714-523-0845 (fax)
www.isatsb.com

Rev. 10
12/06/18

Page
H3.1

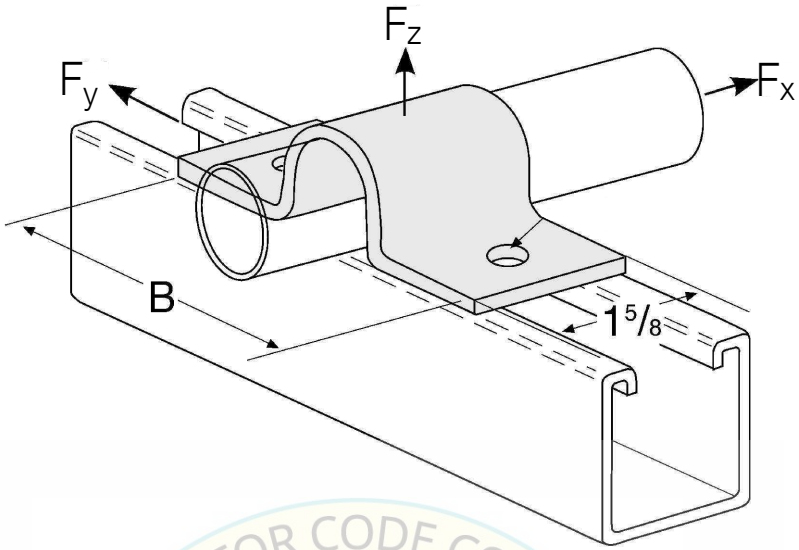

MATERIAL: CLAMP - HOT ROLLED MILD STEEL, ASTM A1011SS, GRADE 33
BOLT - ASTM A307, GRADE A

REVIEWED FOR CODE COMPLIANCE
ICAI
OPM-0403
BY: William Staehlin
DATE: 01-26-2024
CALIFORNIA BUILDING CODE 2022

PHD Figure Number	Nominal Pipe Diameter (in)	Bolt Diameter (in)	Bolt Torque (ft-lbs)	Design Loads, ASD (lbs)		
				Fx	Fy	Fz
7256	2	3/8	19	675	910	106
7260	4	3/8	19	505	965	351

1. TRAPEZE STRUT SECTIONAL PROPERTIES MUST MEET OR EXCEED THE SECTIONAL PROPERTIES ON PAGE H2.
2. FOR USE WITH CAST IRON.
3. FACTOR OF SAFETY = 2.0

1 PIECE PHD STANDARD 2-HOLE PIPE STRAP - FOR USE WITH CAST IRON PIPING

REGISTERED PROFESSIONAL ENGINEER
MARCIN WASAZNIK
S 6612
STRUCTURAL
STATE OF CALIFORNIA

ISAT
A Division of Tomarco Contractor Specialties

International Seismic Application Technology
14848 Northam Street, La Mirada, CA 90638
877-999-4728 (Toll Free) 714-523-0845 (fax)
www.isatsb.com

Rev. 1
12/20/18

Page
H3.1.1

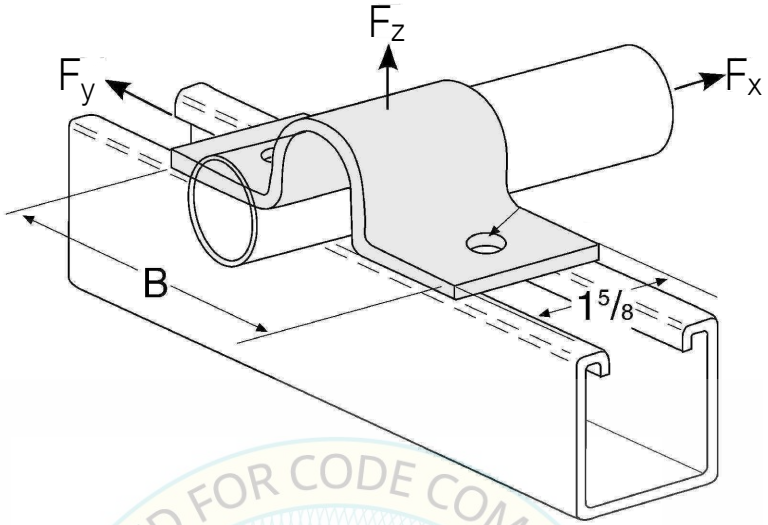

MATERIAL: CLAMP - HOT ROLLED MILD STEEL, ASTM A1011SS, GRADE 33
BOLT - ASTM A307, GRADE A

REVIEWED FOR CODE COMPLIANCE
HCAi
OPM-0403
BY: William Staehlin
DATE: 01-26-2024
CALIFORNIA BUILDING CODE, 2022

PHD Figure Number	Nominal Pipe Diameter (in)	Bolt Diameter (in)	Bolt Torque (ft-lbs)	Design Loads, ASD (lbs)		
				Fx	Fy	Fz
7254	1 1/4	5/16	14	380	210	64
7255	1 1/2	5/16	14	250	240	76
7256	2	3/8	19	615	1420	106
7257	2 1/2	3/8	19	200	675	159
7258	3	3/8	19	615	1350	213
7259	3 1/2	3/8	19	555	555	260
7260	4	3/8	19	415	1190	351
7262	6	3/8	19	165	875	643

1.TRAPEZE STRUT SECTIONAL PROPERTIES MUST MEET OR EXCEED THE SECTIONAL PROPERTIES ON PAGE H2.
2. FOR USE WITH STEEL PIPE AND RMC CONDUIT.
3. FACTOR OF SAFETY = 2.0

1 PIECE PHD STANDARD 2-HOLE PIPE STRAP - FOR USE WITH STEEL PIPE ≥ SCH 10 OR RMC CONDUIT

REGISTERED PROFESSIONAL ENGINEER MARCIN WASAZNIK S-6612 STRUCTURAL STATE OF CALIFORNIA

ISAT
A Division of Tomarco Contractor Specialties
International Seismic Application Technology
14848 Northam Street, La Mirada, CA 90638
877-999-4728 (Toll Free) 714-523-0845 (fax)
www.isatsb.com

Rev. 10
12/06/18

Page
H3.1.2

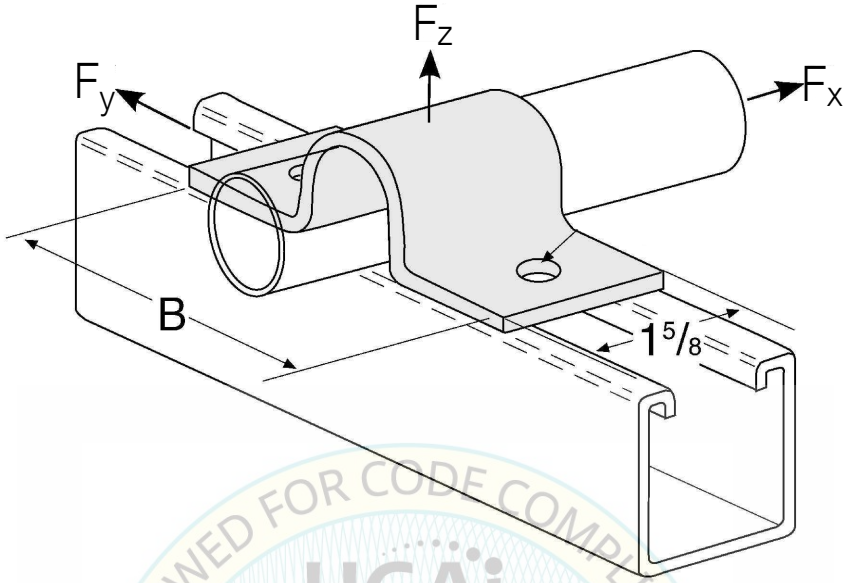

REVIEWED FOR CODE COMPLIANCE
HCAi
OPM-0403
BY: William Staehlin
DATE: 01-26-2024
CALIFORNIA BUILDING CODE, 2022

MATERIAL: CLAMP - HOT ROLLED MILD STEEL, ASTM A1011SS, GRADE 33
BOLT - ASTM A307, GRADE A

PHD Figure Number	Nominal Pipe Diameter (in)	Bolt Diameter (in)	Bolt Torque (ft-lbs)	Design Loads, ASD (lbs)		
				Fx	Fy	Fz
7257	2 1/2	3/8	19	180	655	159
7258	3	3/8	19	585	1160	213
7260	4	3/8	19	395	1210	351

1. TRAPEZE STRUT SECTIONAL PROPERTIES MUST MEET OR EXCEED THE SECTIONAL PROPERTIES ON PAGE H2.
2. FOR USE WITH EMT/IMT CONDUIT.
3. FACTOR OF SAFETY = 2.0

1 PIECE PHD STANDARD 2-HOLE PIPE STRAP - FOR USE WITH EMT/IMT CONDUIT

REGISTERED PROFESSIONAL ENGINEER MARCIN WASAZNIK S-6612 STRUCTURAL STATE OF CALIFORNIA

ISAT
A Division of Tomarco Contractor Specialties
International Seismic Application Technology
14848 Northam Street, La Mirada, CA 90638
877-999-4728 (Toll Free) 714-523-0845 (fax)
www.isatsb.com

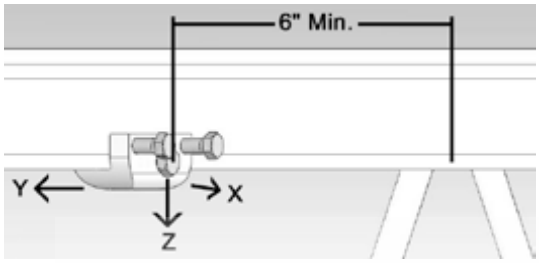

BAR JOIST CLAMP

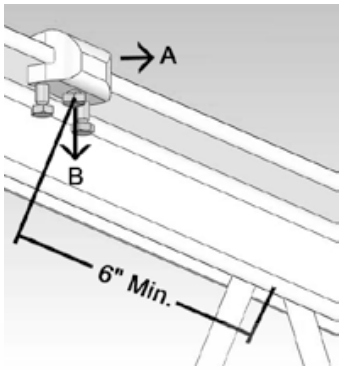

BAR JOIST CLAMP AS BEAM CLAMP

Bar Joist Clamp	Maximum Design Load	
Brace Angle From Horizontal	X-Z (Lateral)	Y-Z (Longitudinal)
46°-60°	1040 lbs.	970 lbs.
31°-45°	1490 lbs.	1370 lbs.
16°-30°	1800 lbs.	2060 lbs.
0°-15°	2010 lbs.	2300 lbs.

Bar Joist Clamp As Beam Clamp	Maximum Design Load
Brace Angle From Horizontal	A-B (Lateral)
46°-60°	1150 lbs.
31°-45°	1660 lbs.
16°-30°	1990 lbs.
0°-15°	2220 lbs.

Minimum Beam Flange Thickness = 1/4"
Maximum Beam Flange Thickness = 3/8"

REVIEWED FOR CODE COMPLIANCE
HCAi
OPM-0403
BY: William Staehlin
DATE: 01-26-2024
CALIFORNIA BUILDING CODE 2022

FUNCTION: Allows for attachment of a sway brace assembly to a steel bar joist or structural member as a point of connection in lieu of drilling or welding. Utilize the Fig. 035 Bar Joist Clamp as a beam clamp, or bar joist clamp in the transverse direction of beam/ joist; as a bar joist clamp in the longitudinal direction of the bar joist with a bracing element to form a complete sway brace assembly.

FASTENER SIZE: 1/2" Diameter M. B.

FINISH: Electro-galvanized

INSTALL: Place on structural member with the flange contacting the back of the jaw. Tighten set screws finger tight then evenly tighten until hex heads break off. Attach brace arm connector to the integral attachment bolt. Ensure that the attachment bolt head bottoms out securely.

PHD FIG. 035 SWAY BRACE BAR STRUCTURAL JOIST ADAPTER

ISAT
A Division of Tomarco Contractor Specialties
International Seismic Application Technology
14848 Northam Street, La Mirada, CA 90638
877-999-4728 (Toll Free) 714-523-0845 (fax)
www.isatsb.com

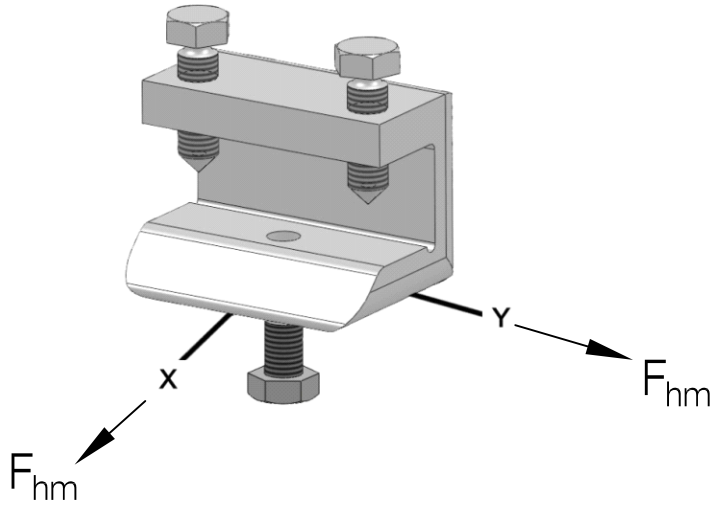

FM Maximum Design Load, Horizontal			
Beam Flange Thickness	Brace Angle From Horizontal (Degrees)	X	Y
		F_{hm} Lbs.	F_{hm} Lbs.
3/8" Min. 1-1/4" Max.	46° - 60°	1,150	900
	31° - 45°	1,800	1,050
	16° - 30°	2,230	1,260
	0° - 15°	2,460	1,410

REVIEWED FOR CODE COMPLIANCE
OPM-0403
BY: William Staehlin
DATE: 01-26-2024
CALIFORNIA BUILDING CODE, 2019

FUNCTION: Allows for attachment of a sway brace assembly to a steel structural member as a point of connection in lieu of drilling or welding. Utilize the Fig. 045 beam clamp with a bracing element to form a complete sway brace assembly.
FASTENER SIZE: 1/2" Diameter M. B.
FINISH: Electro-galvanized
INSTALL: Place on structural member with the flange contacting the back of the jaw. Tighten set screws finger tight then evenly tighten until hex heads break off. Attach brace arm connector with the supplied attachment bolt. Ensure that the attachment bolt head bottoms out.

NOTE: "FM Maximum Design Load" Shown = Maximum Horizontal Force, F(hm)
Maximum Allowable Axial Brace Force (P) at 45 Degrees = F(hm) x 1.414
Multiplier For Axial Brace Capacity (P) at ___Degrees From Horizontal:

	Degrees		
	30	45	60
= F(hm) x	1.155	1.414	2.000

PHD FIG. 045 SWAY BRACE STRUCTURAL ADAPTER

REGISTERED PROFESSIONAL ENGINEER MARCIN WASAZNIK S 6612 STRUCTURAL STATE OF CALIFORNIA

ISAT
A Division of Tomarco Contractor Specialties
International Seismic Application Technology
14848 Northam Street, La Mirada, CA 90638
877-999-4728 (Toll Free) 714-523-0845 (fax)
www.isatsb.com

Rev. 9
07/27/17
Page
H3.1.5

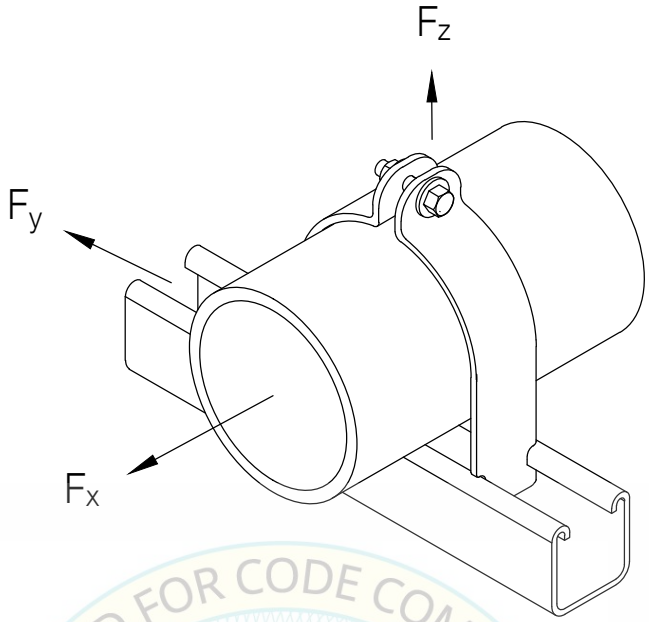

MATERIAL: CLAMP - HOT ROLLED MILD STEEL, ASTM A1011SS, GRADE 33
BOLT - ASTM A307, GRADE A
FLAT WASHER - ANSI/ASME B18.22.1 ON EACH SIDE

REVIEWED FOR CODE COMPLIANCE
HCA
OPM-0403
BY: William Staehlin
DATE: 01-26-2024
CALIFORNIA BUILDING CODE, 2022

PHD Figure Number	Nominal Pipe Size (in)	Bolt + Washer Diameter (in)	Bolt Torque (ft-lbs)	Design Loads, ASD (lbs)		
				Fx	Fy	Fz
2205	1 1/4	1/4	6	145	150	64
2206	1 1/2	5/16	11	195	215	76
2207	2	5/16	11	245	275	106
2008	2 1/2	5/16	11	310	375	159
2009	3	5/16	11	320	330	213
2011	4	5/16	11	295	440	260

1. TRAPEZE STRUT SECTIONAL PROPERTIES MUST MEET OR EXCEED THE SECTIONAL PROPERTIES ON PAGE H2.
2. FOR USE WITH EMT CONDUIT.
3. FACTOR OF SAFETY = 2.0

2 PIECE PHD TRAPEZE CLAMP - FOR USE WITH EMT CONDUIT

REGISTERED PROFESSIONAL ENGINEER
MARCIN WASAZNIK
S 6612
STRUCTURAL
STATE OF CALIFORNIA

ISAT
A Division of Tomarco Contractor Specialties
International Seismic Application Technology
14848 Northam Street, La Mirada, CA 90638
877-999-4728 (Toll Free) 714-523-0845 (fax)
www.isatsb.com

Rev. 1
12/06/18

Page
H3.1.6

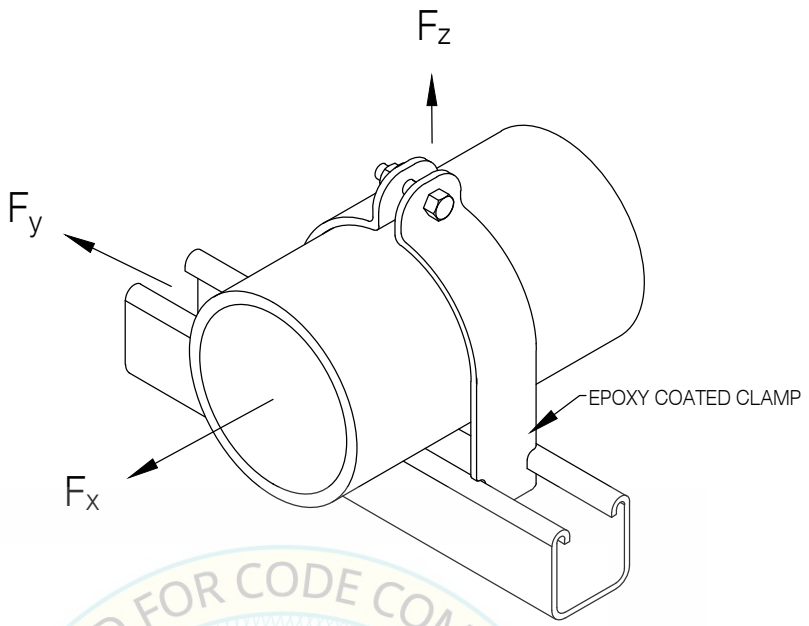

MATERIAL: CLAMP - HOT ROLLED MILD STEEL, ASTM A1011SS, GRADE 33
BOLT - ASTM A307, GRADE A

REVIEWED FOR CODE COMPLIANCE
HCAi
OPM-0403
By: William Staehlin
DATE: 01-26-2024
CALIFORNIA BUILDING CODE, 2022

PHD Figure Number	Nominal Pipe Size (in)	Bolt Diameter (in)	Bolt Torque (ft-lbs)	Design Loads, ASD (lbs)		
				Fx	Fy	Fz
2306	1 1/4	1/4	7	100	165	64
2307	1 1/2	1/4	7	130	125	76
2308	2	1/4	7	205	155	106
2309	2 1/2	5/16	11	280	175	159
2310	3	5/16	16	215	375	213
2312	4	5/16	16	275	305	351
2313	5	3/8	24	735	380	484
2314	6	3/8	24	435	415	643

1. TRAPEZE STRUT SECTIONAL PROPERTIES MUST MEET OR EXCEED THE SECTIONAL PROPERTIES ON PAGE H2.
2. FOR USE WITH COPPER TYPE L & K.
3. FACTOR OF SAFETY = 2.0

2 PIECE PHD TRAPEZE CLAMP WITH EPOXY - FOR USE WITH COPPER TYPE L & K

REGISTERED PROFESSIONAL ENGINEER MARCIN WASAZNIK S 6612 STRUCTURAL STATE OF CALIFORNIA

ISAT
A Division of Tomarco Contractor Specialties
International Seismic Application Technology
14848 Northam Street, La Mirada, CA 90638
877-999-4728 (Toll Free) 714-523-0845 (fax)
www.isatsb.com

Rev. 0
12/05/18

Page
H3.1.10

MATERIAL
CLAMP: LOW CARBON STEEL
CUSHION MATERIAL: MULTI-FLEX TES A9110 EV1 BLACK, IN ACCORDANCE WITH ASTM D4474 TES 0130 A90000
BOLT: SAE J429, GRADE 8

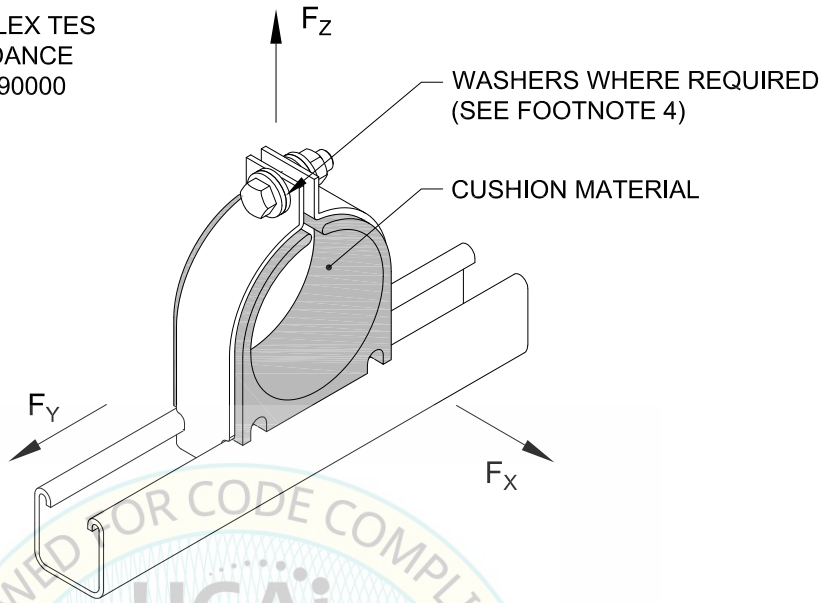

REVIEWED FOR CODE COMPLIANCE
HCAi
OPM-0403
BY: William Staehlin
DATE: 01-26-2024
CALIFORNIA BUILDING CODE 2022

PHD Figure Number	Nominal Pipe Size (in)	Bolt Diameter (in)	Bolt Torque (ft-lbs)	Design Loads, ASD (lbs)		
				Fx	Fy	Fz
2508[4]	1 1/4	1/4	15	200	134	64
2509[4]	1 1/2	1/4	15	200	134	76
2510[4]	2	1/4	15	200	134	106
2511	2 1/2	1/4	15	180	192	159
2512	3	1/4	20	180	192	213
2514	4	3/8	30	378	286	351
2525	5	3/8	30	378	286	484
2526	6	3/8	30	377	380	643

1. TRAPEZE STRUT SECTIONAL PROPERTIES MUST MEET OR EXCEED THE SECTIONAL PROPERTIES ON PAGE H2.
2. FOR USE WITH COPPER TYPE L & K.
3. FACTOR OF SAFETY = 2.0
4. USE DOUBLE WASHER ON EACH END OF BOLT (4 TOTAL).

2-PIECE PHD TRAPEZE CUSH CLAMP FOR USE WITH COPPER TYPE L & K

REGISTERED PROFESSIONAL ENGINEER MARCIN WASAZNIK S-6612 STRUCTURAL STATE OF CALIFORNIA

ISAT
A Division of Tomarco Contractor Specialties
International Seismic Application Technology
14848 Northam Street, La Mirada, CA 90638
877-999-4728 (Toll Free) 714-523-0845 (fax)
www.isatsb.com

Rev. 1
6/22/2023

Page
H3.1.11

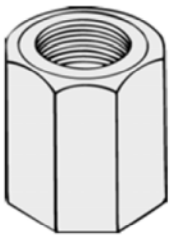

Rod Coupler
ASME B18.2.2,
Tabl. 13

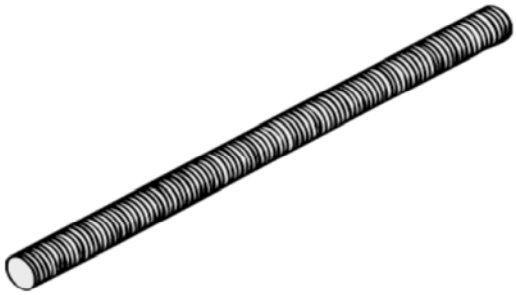

Threaded Rod
ASTM A36
Yield Strength = 36 ksi Min.

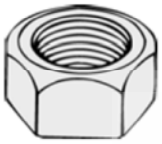

Hex Nut
ANSI/ASME B18.2.2

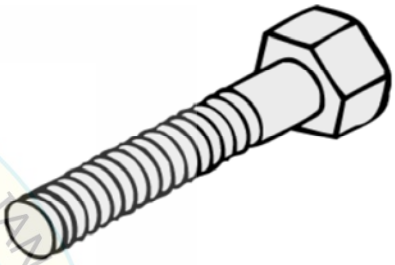

Hex Head Bolt
ANSI/ASME B18.2.1

Flat Washer
ANSI/ASME B18.22.1

Lock Washer
ANSI/ASME B18.21.1

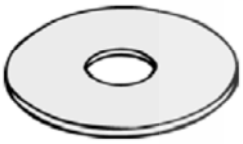

Fender Washer
ANSI/ASME B18.22.1

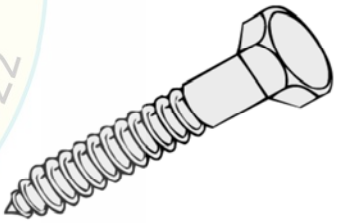

Lag Screw
ANSI/ASME B18.6.1

Note: Lag screws not allowed
for fire sprinkler bracing

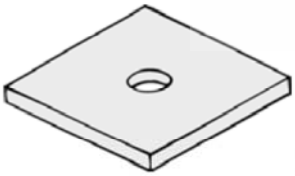

Plate Washer
1/4" Thickness and below ASTM A1011
Structural Steel, Grade 33
3/8" Thickness and above ASTM A-36,
Structural Grade

REVIEWED FOR CODE COMPLIANCE
HCAi
OPM-0403
BY: William Staehlin
DATE: 01-26-2024
CALIFORNIA BUILDING CODE, 2022

FASTENERS - GENERAL

REGISTERED PROFESSIONAL ENGINEER
MARCIN WASAZNIK
S 6612
STRUCTURAL
STATE OF CALIFORNIA

ISAT
A Division of Tomarco Contractor Specialties

International Seismic Application Technology
14848 Northam Street, La Mirada, CA 90638
877-999-4728 (Toll Free) 714-523-0845 (fax)
www.isatsb.com

Rev. 11
10/10/23

Page
H3.2

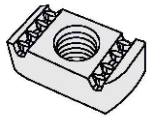

PHD 3008, 3108
Strut Nut

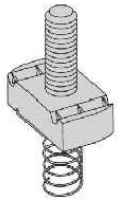

PHD 3611
Studded Strut Nut

With or Without Spring

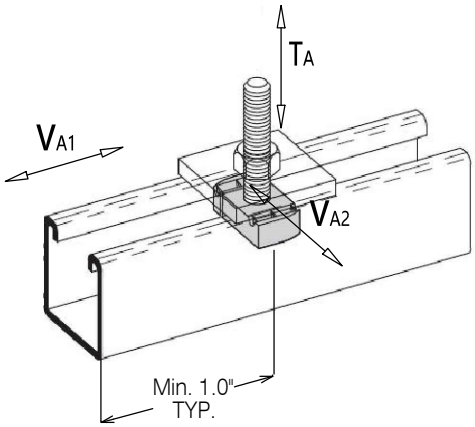

DESIGN VALUES IN 12 GA. STRUT (ASD) WITHOUT PRYING [1]						
PHD PART #	Thread Size Inch	Pull-Out Strength T_A Lbs	Resistance To Slip (Parallel) V_{A1} Lbs	Shear Strength (Perpend.) V_{A2} Lbs	Bolt [2] Torque Ft-Lbs	Nut Thickness Inch
3008/3108/3611	1/2-13	3,250	1,850	1,415	50	1/2

Steel : ASTM A-576, Grade M1015 Case Hardened to RC25 Min.

1. Check for unity when determining allowed combined tenion and shear capacity:
$T / T_A + V_1 / V_{A1} + V_2 / V_{A2} \leq 1.2$

2. Hex Bolt With Std Hex Nut Only. For Studded Strut Nut With Tite-End Fastener (Pg F14), Tighten Till Hex Head Shears Off.

3. Effects of prying to be analyzed when brace attachments are used.

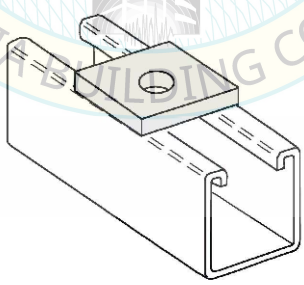

SQUARE WASHER (1-5/8" x 1-5/8" x 1/4" TYP.)
FOR 3/8", 1/2", 5/8" DIA. ROD OR BOLT
STEEL: ASTM A-1011, GRADE 33

STRUT NUTS, SQUARE WASHERS

REVIEWED FOR CODE COMPLIANCE
ICC-ES
OPM-0403
BY: William Staehlin
DATE: 01-26-2024
CALIFORNIA BUILDING CODE, 2022

REGISTERED PROFESSIONAL ENGINEER
MARCIN WASAZNIK
S 6612
STRUCTURAL
STATE OF CALIFORNIA

ISAT
A Division of Tomarco Contractor Specialties

International Seismic Application Technology
14848 Northam Street, La Mirada, CA 90638
877-999-4728 (Toll Free) 714-523-0845 (fax)
www.isatsb.com

ALLOWABLE SCREW SHEAR STRENGTH FOR Fu = 45 KSI (33 KSI YIELD STRENGTH) [1]										
										Ω = 3
SCREW SIZE	SCREW DIAMETER	THICKNESS OF MEMBER IN CONTACT WITH SCREW HEAD	ALLOWABLE FASTENER STRENGTH	ALLOWABLE SHEAR STRENGTH, Pns / Ω [2]						
				THICKNESS OF MEMBER NOT IN CONTACT WITH SCREW HEAD						
				INCH	INCH	INCH	INCH	INCH	INCH	INCH
			Pss / Ω	0.036	0.048	0.060	0.075	0.090	0.105	0.135
	INCH	INCH	LBS.	LBS.	LBS.	LBS.	LBS.	LBS.	LBS.	LBS.
#8	0.164	0.036	464	174	239	239	239	239	239	239
		0.048	464	174	268	319	319	319	319	319
		0.060	464	174	268	373	400	400	400	400
		0.075	464	174	268	373	497	497	497	497
		0.090	464	174	268	373	497	597	597	597
		0.105	464	174	268	373	497	597	697	697
		0.135	464	174	268	373	497	597	697	897
#10	0.190	0.036	495	188	277	277	277	277	277	277
		0.048	495	188	289	370	370	370	370	370
		0.060	495	188	289	403	463	463	463	463
		0.075	495	188	289	403	563	577	577	577
		0.090	495	188	289	403	563	693	693	693
		0.105	495	188	289	403	563	693	807	807
		0.135	495	188	289	403	563	693	807	1040
#12	0.216	0.036	692	200	309	315	315	315	315	315
		0.048	692	200	308	420	420	420	420	420
		0.060	692	200	308	430	523	523	523	523
		0.075	692	200	308	430	600	657	657	657
		0.090	692	200	308	430	600	787	787	787
		0.105	692	200	308	430	600	787	920	920
		0.135	692	200	308	430	600	787	920	1180
#14	0.237	0.036	924	218	340	363	363	363	363	363
		0.048	924	218	331	467	487	487	487	487
		0.060	924	218	331	463	607	607	607	607
		0.075	924	218	331	463	647	760	760	760
		0.090	924	218	331	463	647	850	910	910
		0.105	924	218	331	463	647	850	1063	1063
		0.135	924	218	331	463	647	850	1063	1367

1. MINIMUM SPACING IS TO BE THREE TIMES THE FASTENER DIAMETER. MINIMUM EDGE DISTANCE SHALL BE 1.5 TIMES THE FASTENER DIAMETER.
2. CONNECTION CAPACITY MAY BE GOVERNED BY THE ALLOWABLE SHEAR STRENGTH OF THE FASTENER. TABULATED VALUES ARE BASED ON DARTS SELF-DRILLING SCREWS GIVEN IN ESR-1408.
3. PENETRATION OF SCREWS THROUGH JOINED MATERIALS SHALL NOT BE LESS THAN 3 EXPOSED THREADS.

REVIEWED FOR CODE COMPLIANCE
OPM-0403
BY: William Staehlin
DATE: 01-26-2024
CALIFORNIA BUILDING CODE 2019

SCREW SHEAR DESIGN VALUES

AISI SPECIFICATION, 2007 EDITION / S2-10

REGISTERED PROFESSIONAL ENGINEER
MARCIN WASAZNIK
S 6612
STRUCTURAL
STATE OF CALIFORNIA

ISAT
A Division of Tomarco Contractor Specialties

International Seismic Application Technology
14848 Northam Street, La Mirada, CA 90638
877-999-4728 (Toll Free) 714-523-0845 (fax)
www.isatsb.com

ALLOWABLE SCREW SHEAR STRENGTH FOR Fu = 45 KSI (33 KSI YIELD STRENGTH) [1]										
										Ω = 3
SCREW SIZE	SCREW DIAMETER	THICKNESS OF MEMBER IN CONTACT WITH SCREW HEAD T_1		ALLOWABLE FASTENER STRENGTH	ALLOWABLE SHEAR STRENGTH, Pns / Ω [2]					
					THICKNESS OF MEMBER NOT IN CONTACT WITH SCREW HEAD T_2					
					INCH	INCH	INCH	INCH	INCH	INCH
		DESIGN			0.031	0.035	0.045	0.057	0.071	0.102
		THICKNESS	MILS [4]	Pss / Ω	33 (DW)	33 (ST)	43	54	68	97
	INCH	INCH		LBS.	LBS.	LBS.	LBS.	LBS.	LBS.	LBS.
#8	0.164	0.031	33 (DW)	464	141	142	142	142	142	142
		0.035	33 (ST)	464	141	164	177	177	177	177
		0.045	43	464	141	164	244	254	254	254
		0.057	54	464	141	164	244	344	349	349
		0.071	68	464	141	164	244	344	474	474
		0.102	97	464	141	164	244	344	474	677
#10	0.190	0.031	33 (DW)	495	151	153	153	153	153	153
		0.035	33 (ST)	495	151	177	194	194	194	194
		0.045	43	495	151	177	263	277	277	277
		0.057	54	495	151	177	263	370	381	381
		0.071	68	495	151	177	263	370	523	530
		0.102	97	495	151	177	263	370	523	785
#12	0.216	0.031	33 (DW)	692	161	163	163	163	163	163
		0.035	33 (ST)	692	161	188	207	207	207	207
		0.045	43	692	161	188	280	300	300	300
		0.057	54	692	161	188	280	394	412	412
		0.071	68	692	161	188	280	394	557	576
		0.102	97	692	161	188	280	394	557	892
#14	0.250	0.031	33 (DW)	924	174	176	176	176	176	176
		0.035	33 (ST)	924	174	203	223	223	223	223
		0.045	43	924	174	203	302	323	323	323
		0.057	54	924	174	203	302	424	450	450
		0.071	68	924	174	203	302	424	600	635
		0.102	97	924	174	203	302	424	600	1026

1. MINIMUM SPACING IS TO BE 3 TIMES THE FASTENER DIAMETER. MINIMUM EDGE DISTANCE SHALL BE 1.5 TIMES THE FASTENER DIAMETER.
2. CONNECTION CAPACITY MAY BE GOVERNED BY THE ALLOWABLE SHEAR STRENGTH OF THE FASTENER. TABULATED VALUES ARE BASED ON DARTS SELF-DRILLING SCREWS GIVEN IN ESR-1408.
3. PENETRATION OF SCREWS THROUGH JOINED MATERIALS SHALL NOT BE LESS THAN 3 EXPOSED THREADS.
4. 33 MIL (DW) = 20 GA. DRYWALL, 33 MIL (ST) = 20 GA. STRUCTURAL, 43 MIL = 18 GA., 54 MIL = 16 GA. 68 MIL = 14 GA., 97 MIL = 12 GA.

REVIEWED FOR CODE COMPLIANCE
HCAi
OPM-0403
BY: William Staehlin
DATE: 01-26-2024
CALIFORNIA BUILDING CODE, 2022

SCREW SHEAR DESIGN VALUES FOR METAL STUDS, JOISTS AND ACCESSORIES (STEEL TO STEEL CONNECTIONS)

AISI SPECIFICATION, 2007 EDITION / S2-10

REGISTERED PROFESSIONAL ENGINEER
MARCIN WASAZNIK
S 6612
STRUCTURAL
STATE OF CALIFORNIA

ISAT
A Division of Tomarco Contractor Specialties

International Seismic Application Technology
14848 Northam Street, La Mirada, CA 90638
877-999-4728 (Toll Free) 714-523-0845 (fax)
www.isatsb.com

ALLOWABLE SCREW PULL-OUT TENSION STRENGTH FOR Fu - 45 KSI (33 KSI YIELD STRENGTH) [1] MATERIAL NOT IN CONTACT WITH SCREW HEAD Ω = 3									
SCREW SIZE	SCREW DIAMETER	ALLOWABLE FASTENER STRENGTH	ALLOWABLE PULL-OUT STRENGTH, Pnot / Ω [2]						
			THICKNESS OF MEMBER NOT IN CONTACT WITH SCREW HEAD						
			INCH	INCH	INCH	INCH	INCH	INCH	INCH
		Pst / Ω	0.036	0.048	0.060	0.075	0.090	0.105	0.125
	INCH	LBS.	LBS.	LBS.	LBS.	LBS.	LBS.	LBS.	LBS.
#8	0.164	658	75	100	125	157	188	220	282
#10	0.190	386	87	116	145	182	218	254	327
#12	0.216	868	99	126	165	207	248	289	373
#14	0.250	1067	115	153	191	239	287	333	430

ALLOWABLE SCREW PULL-OVER TENSION STRENGTH FOR Fu - 45 KSI (33 KSI YIELD STRENGTH) [1] MATERIAL IN CONTACT WITH SCREW HEAD - HEX WASHER HEAD SCREWS Ω [3] = 6									
SCREW SIZE	HEX HEAD DIAMETER	ALLOWABLE FASTENER STRENGTH	ALLOWABLE PULL-OVER STRENGTH, PnoV / Ω [2]						
			THICKNESS OF MEMBER NOT IN CONTACT WITH SCREW HEAD						
			INCH	INCH	INCH	INCH	INCH	INCH	INCH
		Pst / Ω	0.036	0.048	0.060	0.075	0.090	0.105	0.125
	INCH	LBS.	LBS.	LBS.	LBS.	LBS.	LBS.	LBS.	LBS.
#8	0.335	329	136	182	227	283	340	395	508
#10	0.399	193	153	215	270	337	403	472	607
#12	0.415	433	168	223	280	350	420	490	630
#14	0.500	533	203	270	338	422	507	590	760

1. MINIMUM SPACING IS TO BE THREE TIMES THE FASTENER DIAMETER. MINIMUM EDGE DISTANCE SHALL BE 1.5 TIMES THE FASTENER DIAMETER.
2. CONNECTION CAPACITY MAY BE GOVERNED BY THE ALLOWABLE TENSILE STRENGTH OF THE FASTENER. TABULATED VALUES ARE BASED ON DARTS SELF-DRILLING SCREWS GIVEN IN ESR-1408.
3. FOR ECCENTRICALLY LOADED CONNECTIONS THAT PRODUCE A NON-UNIFORM PULL-OVER FORCE ON THE FASTENER, THE NOMINAL PULL-OVER STRENGTH HAS BEEN TAKEN AS 50 PERCENT OF Pnov.
4. PENETRATION OF SCREWS THROUGH JOINED MATERIALS SHALL NOT BE LESS THAN 3 EXPOSED THREADS.

REVIEWED FOR CODE COMPLIANCE
OPM-0403
Reviewed by William Staehlin
DATE: 01-26-2024
CALIFORNIA BUILDING CODE 2022

SCREW TENSION DESIGN VALUES

AISI SPECIFICATION, 2007 EDITION / S2-10

REGISTERED PROFESSIONAL ENGINEER MARCIN WASAZNIK S 6612 STRUCTURAL STATE OF CALIFORNIA

ISAT
A Division of Tomarco Contractor Specialties

International Seismic Application Technology
14848 Northam Street, La Mirada, CA 90638
877-999-4728 (Toll Free) 714-523-0845 (fax)
www.isatsb.com

ALLOWABLE SCREW PULL-OUT TENSION STRENGTH FOR Fu = 45 KSI (33 KSI YIELD STRENGTH) [1] MATERIAL NOT IN CONTACT WITH SCREW HEAD								Ω = 3
SCREW SIZE	SCREW DIAMETER	ALLOWABLE FASTENER STRENGTH	ALLOWABLE PULL-OUT STRENGTH, Pnot / Ω [2]					
			THICKNESS OF MEMBER NOT IN CONTACT WITH SCREW HEAD					
			MIL	MIL	MIL	MIL	MIL	MIL
		Pst / Ω	33 (DW)	33 (ST)	43	54	68	97
	INCH	LBS.	LBS.	LBS.	LBS.	LBS.	LBS.	LBS.
#8	0.164	726	65	72	94	118	149	213
#10	0.190	386	76	84	109	137	173	247
#12	0.216	868	86	95	124	156	196	281
1/4	0.250	1067	99	110	144	180	227	325

ALLOWABLE PULL-OVER TENSION STRENGTH - Fu = 45 KSI (33 KSI YIELD STRENGTH) [1] MATERIAL IN CONTACT WITH SCREW HEAD - HEX WASHER HEAD SCREWS								Ω [3] = 6
SCREW SIZE	HEX HEAD DIAMETER	ALLOWABLE FASTENER STRENGTH	ALLOWABLE PULL-OVER STRENGTH, Pnov / Ω [2]					
			THICKNESS OF MEMBER IN CONTACT WITH SCREW HEAD					
			MIL	MIL	MIL	MIL	MIL	MIL
		Pst / Ω	33 (DW)	33 (ST)	43	54	68	97
	INCH	LBS.	LBS.	LBS.	LBS.	LBS.	LBS.	LBS.
#8	0.335	363	118	130	170	213	269	384
#10	0.399	193	140	155	202	254	320	458
#12	0.415	434	146	162	211	264	333	476
1/4	0.500	533	175	195	254	318	401	574

REVIEWED FOR CODE COMPLIANCE
ISAT
OPM-0403
BY: William Staehlin
DATE: 01-26-2024
CALIFORNIA BUILDING CODE 2022

1. MINIMUM SPACING IS TO BE THREE TIMES THE FASTENER DIAMETER. MINIMUM EDGE DISTANCE SHALL BE 1.5 TIMES THE FASTENER DIAMETER.
2. CONNECTION CAPACITY MAY BE GOVERNED BY THE ALLOWABLE TENSILE STRENGTH OF THE FASTENER. TABULATED VALUES ARE BASED ON DARTS SELF-DRILLING SCREWS GIVEN IN ESR-1408.
3. FOR ECCENTRICALLY LOADED CONNECTIONS THAT PRODUCE A NON-UNIFORM PULL-OVER FORCE ON THE FASTENER, THE NOMINAL PULL-OVER STRENGTH HAS BEEN TAKEN AS 50 PERCENT OF Pnov.
4. PENETRATION OF SCREWS THROUGH JOINED MATERIALS SHALL NOT BE LESS THAN 3 EXPOSED THREADS.
5. 33 MIL (DW) = 20 GA. DRYWALL, 33 MIL (ST) = 20 GA. STRUCTURAL, 43 MIL = 18 GA., 54 MIL = 16 GA., 68 MIL = 14 GA., 97 MIL = 12 GA.

SCREW TENSION DESIGN VALUES FOR METAL STUDS, JOISTS AND ACCESSORIES

AISI SPECIFICATION, 2007 EDITION / S2-10

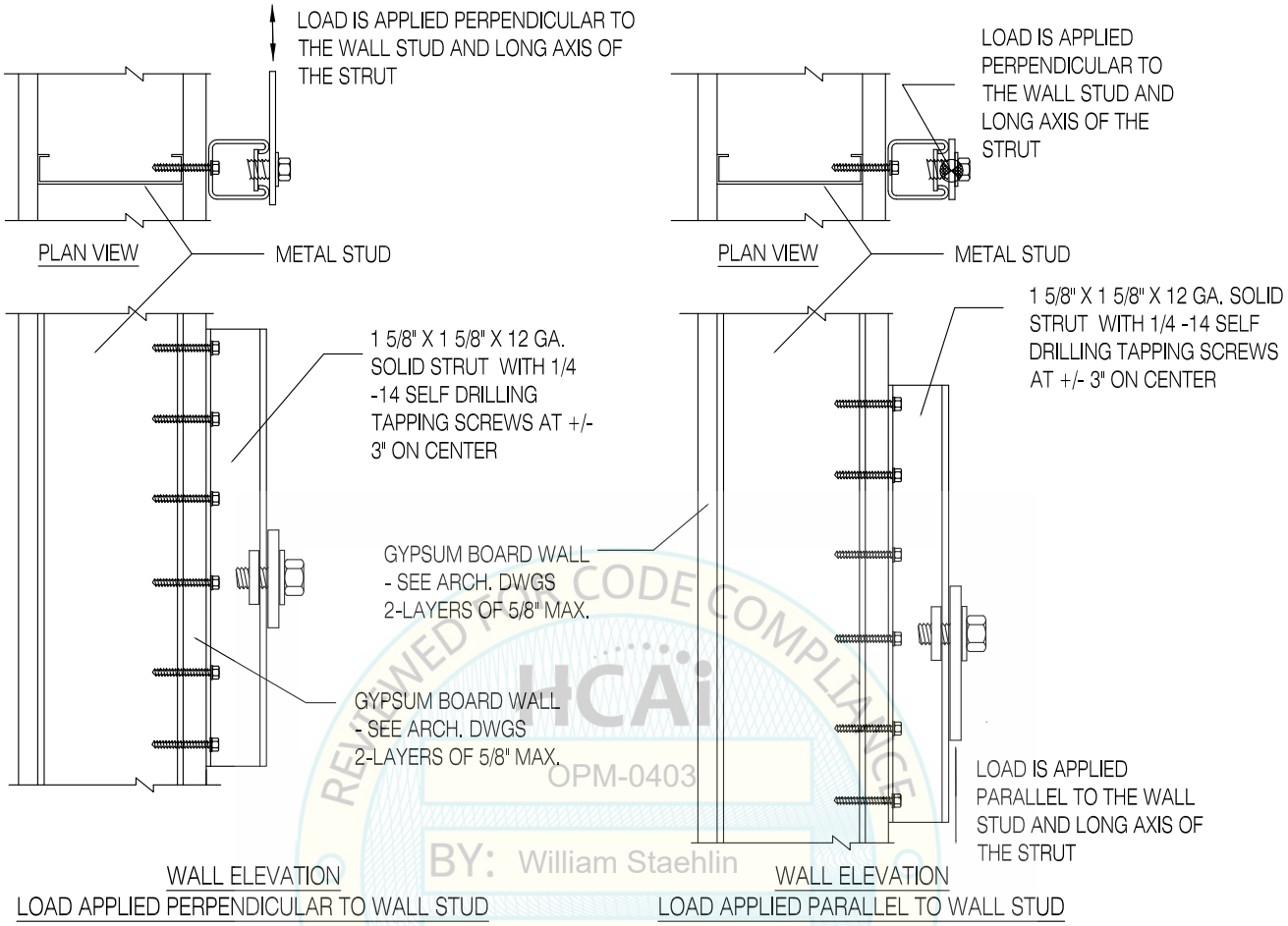

REVIEWED FOR CODE COMPLIANCE
HCAi
OPM-0403
BY: William Staehlin
DATE: 01-26-2024
CALIFORNIA BUILDING CODE, 2022

ALLOWABLE SHEAR PER SCREW						
SCREW SIZE	WALL STUD THINCKNESS (GAGE)	GYPSUM BOARD THICKNESS INCH	LOAD APPLIED PARALLEL LBS.	GYPSUM BOARD THICKNESS INCH	LOAD APPLIED PARALLEL LBS.	LOAD APPLIED PERPENDICULAR LBS.
#14	33 MIL (20 GA.)	5/8	124	(2) AT 5/8	97	40
	≥ 43 MIL (18 GA.)	5/8	226	(2) AT 5/8	166	40
#12	33 MIL (20 GA.)	5/8	N/A	(2) AT 5/8	N/A	N/A
	≥ 43 MIL (18 GA.)	5/8	180	(2) AT 5/8	130	30
#10	33 MIL (20 GA.)	5/8	100	(2) AT 5/8	70	15
	≥ 43 MIL (18 GA.)	5/8	140	(2) AT 5/8	100	25

NOTES:

1. THE PRINCIPLE OF SUPERPOSTION CAN BE USED TO COMBINE LOADS NOT PARALLEL OR PERPENDICULAR TO THE WALL SUCH AS A BRACE SPLAYED AT A 45 DEGREE ANGLE.
2. INSPECTION SHALL INCLUDE VERIFICATION OF SCREWS BEARING AGAINST THE STRUT AND THE STRUT BEARING AGAINST THE WALL BOARD MATERIAL.

SCREW SHEAR DESIGN VALUES FOR GYPSUM WALL BOARD
(Based Static and Cyclic Load Tests)

REGISTERED PROFESSIONAL ENGINEER MARCIN WASAZNIK S-6612 STRUCTURAL STATE OF CALIFORNIA

ISAT
A Division of Tomarco Contractor Specialties
International Seismic Application Technology
14848 Northam Street, La Mirada, CA 90638
877-999-4728 (Toll Free) 714-523-0845 (fax)
www.isatsb.com

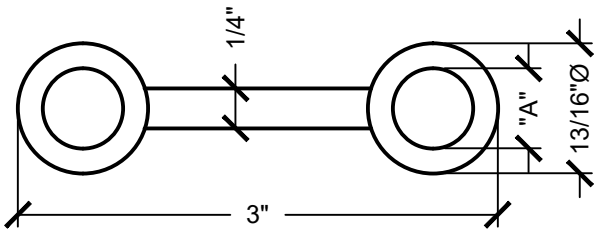

PLAN VIEW

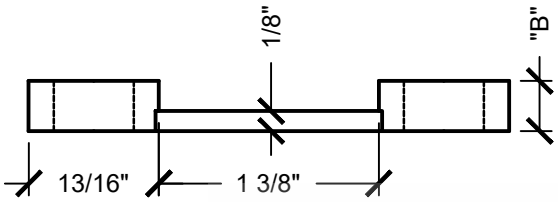

SIDE VIEW

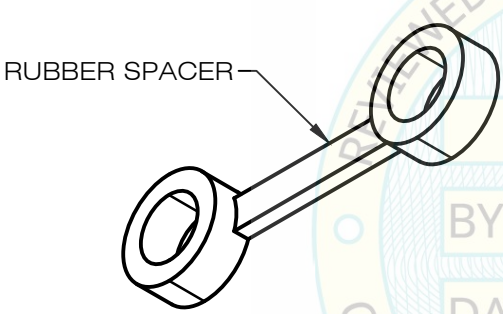

ISOMETRIC VIEW

SEISMIC TUNING FORK SPACER (TFS)

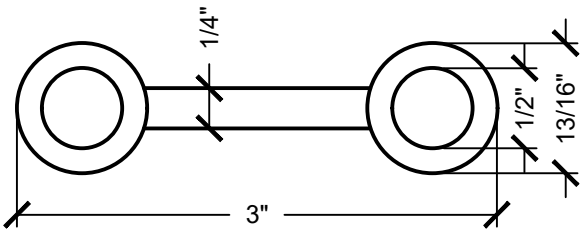

PLAN VIEW

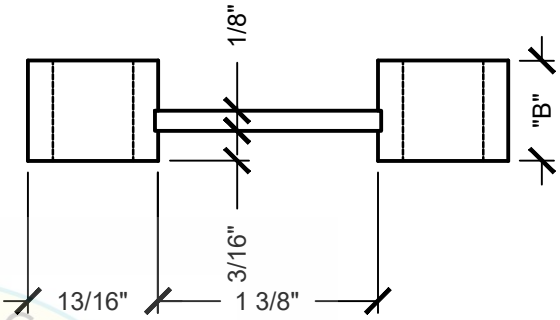

SIDE VIEW

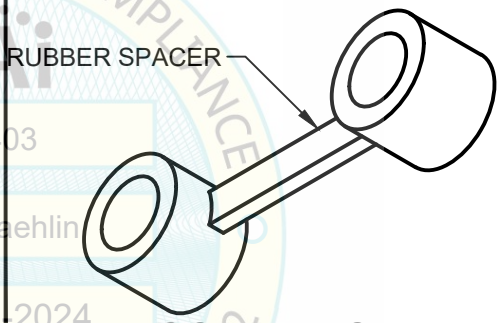

ISOMETRIC VIEW

ANCHOR BRACKET TUNING FORK SPACER (ABTFS)

REVIEWED FOR CODE COMPLIANCE
HCAi
OPM-0403
BY: William Staehlin
DATE: 01-26-2024
CALIFORNIA BUILDING CODE

SPACER			
MODEL #	BOLT SIZE (in)	A (in)	B (in)
TFS38	3/8	3/8	5/16
TFS12	1/2	1/2	5/16
TFS58	5/8	5/8	5/16
ABTFS12	1/2	1/2	5/8

SEISMIC TUNING FORK (TFS) & ANCHOR BRACKET TUNING FORK (ABTFS) SPACER

REGISTERED PROFESSIONAL ENGINEER
MARCIN WASAZNIK
S 6612
STRUCTURAL
STATE OF CALIFORNIA

ISAT
A Division of Tomarco Contractor Specialties
International Seismic Application Technology
14848 Northam Street, La Mirada, CA 90638
877-999-4728 (Toll Free) 714-523-0845 (fax)
www.isatsb.com

DATE: 12/13/2023

PAGE: **H4**

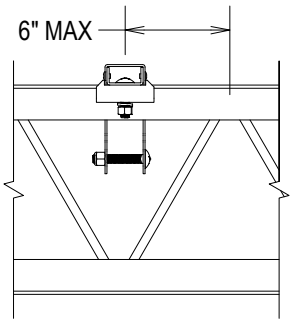

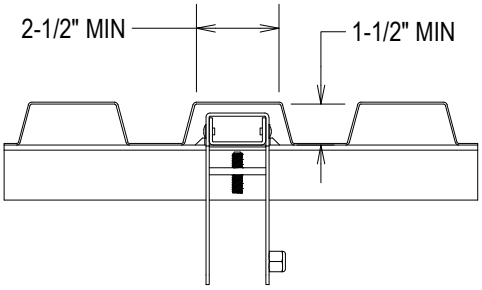

CONNECTION TO STRUCTURAL STEEL SUBJECT TO PRIOR APPROVAL FROM ENGINEER OF RECORD.

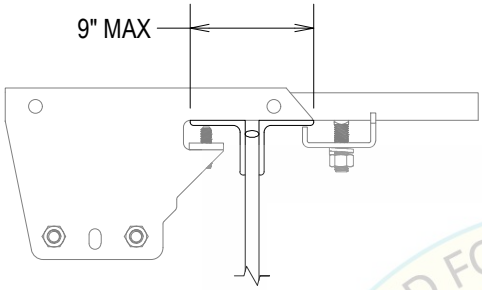

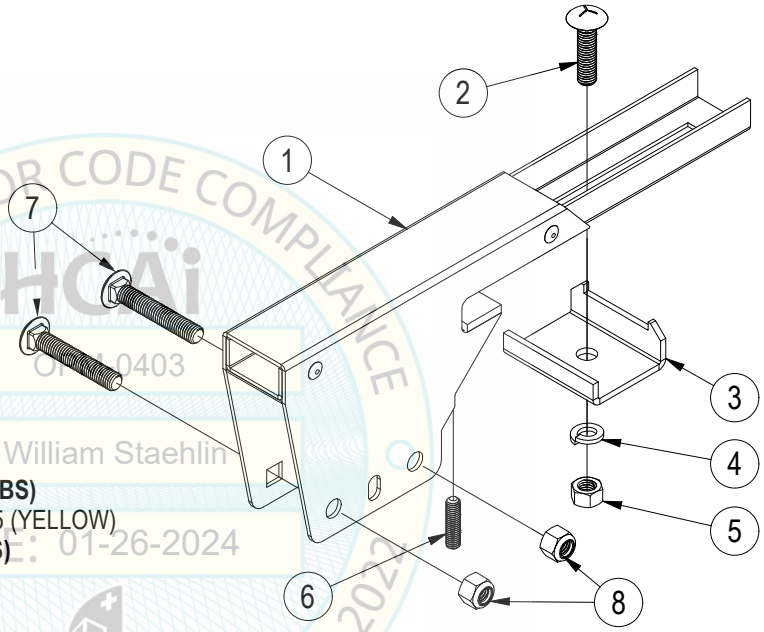

4" JOIST CLAMP - ASSEMBLED PART LIST

ITEM	QTY	DESCRIPTION
1	1	4" JOIST CLAMP
2	1	1/2" X 2" CARRIAGE BOLT
3	1	RETAINER HEEL CLIP
4	1	1/2" LOCK WASHER
5	1	1/2" HEX NUT
6	1	3/8" SET SCREW **(TORQUE 25 FT-LBS)**
7	2	1/2" X 3" CARRIAGE BOLT GRADE 5 (YELLOW)
8	2	1/2" LOCKNUT **(TORQUE 30 FT-LBS)**

REVIEWED FOR CODE COMPLIANCE
HCAi
OPM-0403
BY: William Staehlin
DATE: 01-26-2024
CALIFORNIA BUILDING CODE, 2022

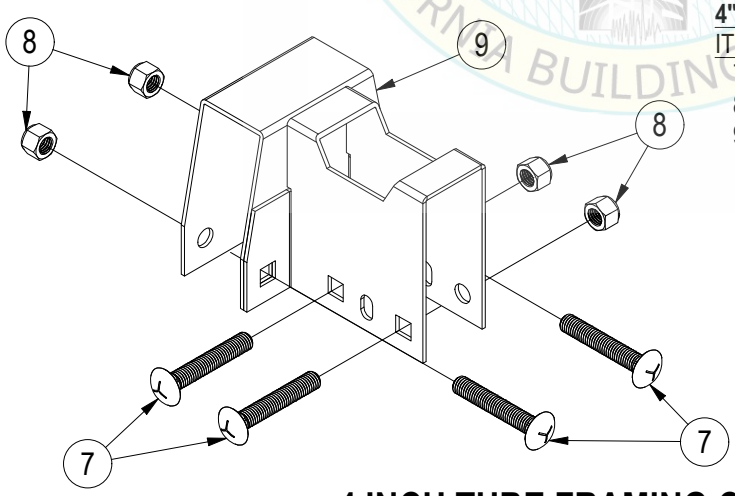

4" T-BRACKET - ASSEMBLED PART LIST

ITEM	QTY	DESCRIPTION
7	2	1/2" X 3" CARRIAGE BOLT GRADE 5 (YELLOW)
8	2	1/2" LOCKNUT **(TORQUE 30 FT-LBS)**
9	1	4" T-BRACKET CLAMP

4 INCH TUBE FRAMING CLAMP SYSTEM

REGISTERED PROFESSIONAL ENGINEER
MARCIN WASAZNIK
S-6612
STRUCTURAL
STATE OF CALIFORNIA

ISAT
A Division of Tomarco Contractor Specialties
International Seismic Application Technology
14848 Northam Street, La Mirada, CA 90638
877-999-4728 (Toll Free) 714-523-0845 (fax)
www.isatsb.com

Rev. 0
05/26/23

Page
H4.20

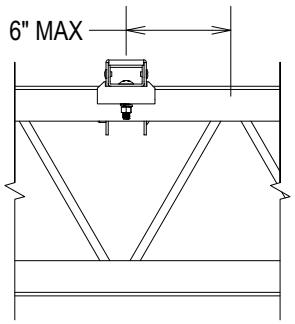

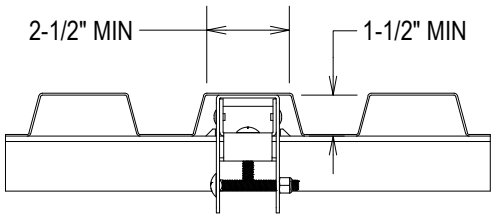

CONNECTION TO STRUCTURAL STEEL SUBJECT TO PRIOR APPROVAL FROM ENGINEER OF RECORD.

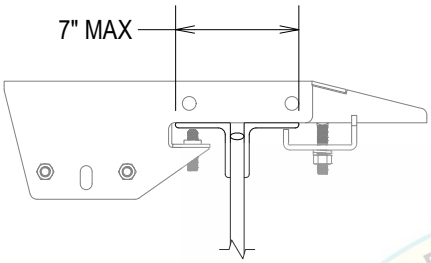

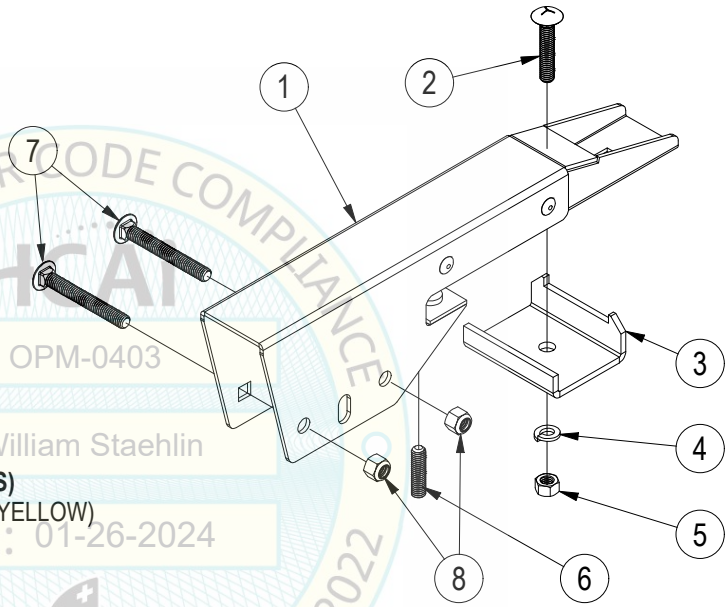

3" END CLAMP - ASSEMBLED PART LIST

ITEM	QTY	DESCRIPTION
1	1	3" END CLAMP
2	1	3/8" X 2" CARRIAGE BOLT
3	1	RETAINER HEEL CLIP
4	1	3/8" LOCK WASHER
5	1	3/8" HEX NUT
6	1	3/8" SET SCREW **(TORQUE 25 FT-LBS)**
7	2	3/8" X 3" CARRIAGE BOLT GRADE 5 (YELLOW)
8	2	3/8" LOCKNUT **(TORQUE 25 FT-LBS)**

REVIEWED FOR CODE COMPLIANCE
HCAI
OPM-0403
BY: William Staehlin
DATE: 01-26-2024
CALIFORNIA BUILDING CODE, 2022

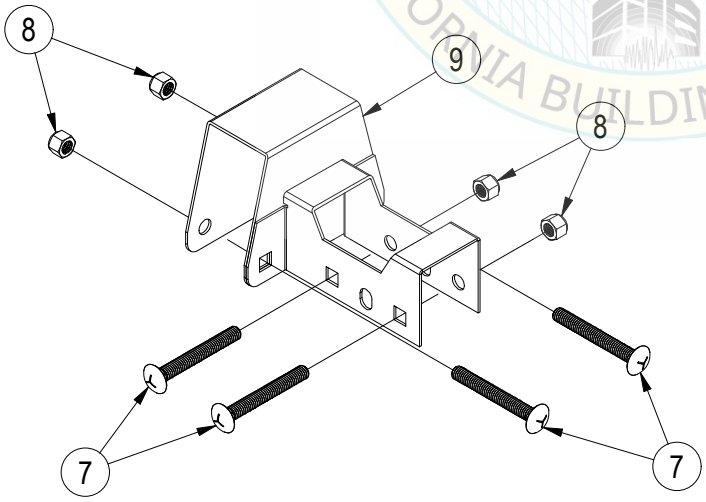

3" T-BRACKET - ASSEMBLED PART LIST

ITEM	QTY	DESCRIPTION
7	2	3/8" X 3" CARRIAGE BOLT GRADE 5 (YELLOW)
8	2	3/8" LOCKNUT **(TORQUE 25 FT-LBS)**
9	1	3" T-BRACKET CLAMP

3 INCH TUBE FRAMING CLAMP SYSTEM

REGISTERED PROFESSIONAL ENGINEER
MARCIN WASAZNIK
S-6612
STRUCTURAL
STATE OF CALIFORNIA

ISAT
A Division of Tomarco Contractor Specialties
International Seismic Application Technology
14848 Northam Street, La Mirada, CA 90638
877-999-4728 (Toll Free) 714-523-0845 (fax)
www.isatsb.com

Rev. 0
05/26/23
Page
H4.20.1

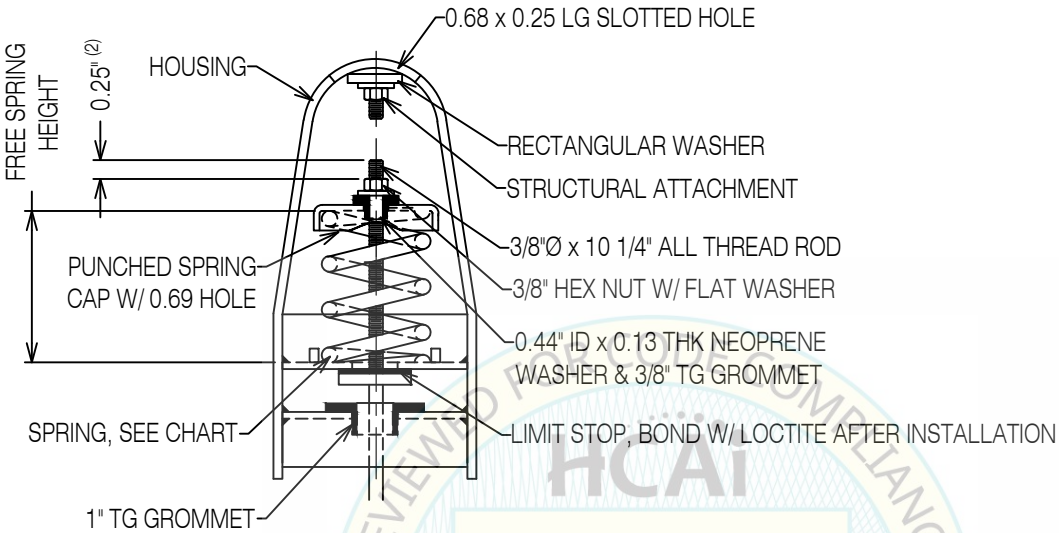

FRONT ELEVATION

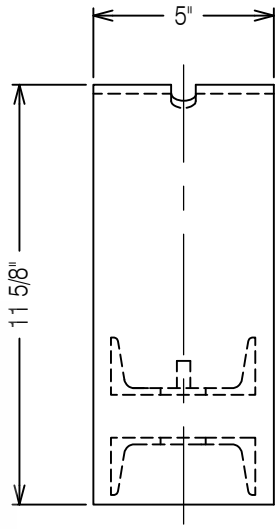

SIDE ELEVATION

HCAi
REVIEWED FOR CODE COMPLIANCE
OPM-0403
BY: William Staehlin
DATE: 01-26-2024
CALIFORNIA BUILDING CODE 2022

KINETICS NOISE CONTROL										
ITEM NO.	MODEL NO. (OUTER)	SPR. NO. (OUTER)	COLOR	WIRE DIA.	MATERIAL	DEFL.	FREE HT.	SPRING O.D.	COMP. HT.	RATE LB/IN
		22.030								
01	SROH-1-50	12	BEIGE	0.234	ASTM A229 [6]	1.00	4.20	3.00	1.42	50
02	SROH-1-100	13	CHROME	0.273	ASTM A229 [6]	1.00	4.20	3.00	1.62	100
03	SROH-1-250	01	BLUE	0.273	ASTM A229 [6]	1.79	4.20	3.00	1.32	140
04	SROH-1-450	02	GREEN	0.331	ASTM A229 [6]	1.54	4.20	3.00	1.69	292
05	SROH-1-625	03	BLACK	0.363	ASTM A229 [6]	1.44	4.20	3.00	1.86	434
06	SROH-1-800	04	GRAY	0.394	ASTM A229 [6]	1.31	4.20	3.00	2.05	611
07	SROH-1-1000	05	RED	0.430	ASTM A229 [6]	1.15	4.20	3.00	2.29	870

NOTES:

1. ALL DIMENSIONS ARE IN INCHES.
2. WHEN COIL IS AT FREE HT AND LIMIT STOP IS IN CONTACT WITH HSG
3. MAX. SEISMIC LOAD RATING: 1990 LBS. LOAD RATING IS ASD VALUE.
   FACTOR OF SAFETY = 1.5
4. MATERIAL: MIN. ASTM A36 (HOUSING, TAPPED PLATE, RECTANGULAR WASHER)
5. MIN. TENSILE STRENGTH IS 147 KSI.

SROH-1-50/1000 SPRING ASSEMBLY

REGISTERED PROFESSIONAL ENGINEER MARCIN WASAZNIK S 6612 STRUCTURAL STATE OF CALIFORNIA

ISAT
A Division of Tomarco Contractor Specialties
International Seismic Application Technology
14848 Northam Street, La Mirada, CA 90638
877-999-4728 (Toll Free) 714-523-0845 (fax)
www.isatsb.com

Rev. 11/16/18

Page **H5.1**

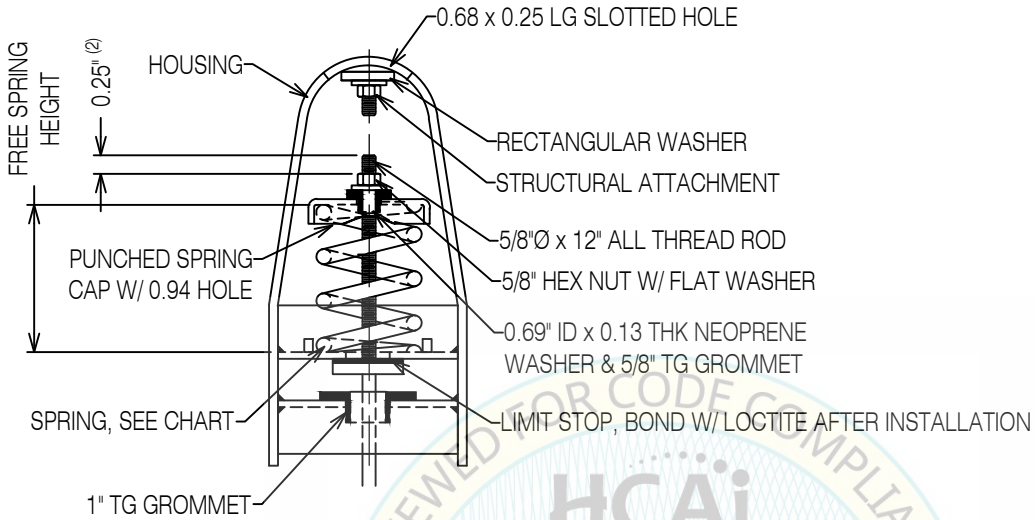

FRONT ELEVATION

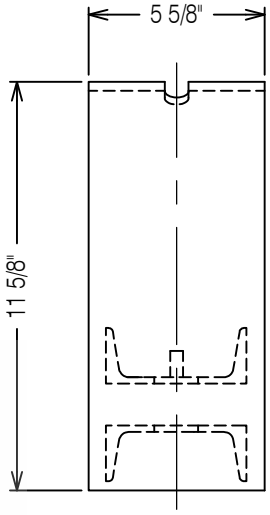

SIDE ELEVATION

KINETICS NOISE CONTROL																		
ITEM NO.	MODEL NO. (OUTER)	SPR. NO. (OUTER)	COLOR	WIRE DIA.	MATERIAL	DEFL.	FREE HT.	SPRING O.D.	COMP. HT.	SPR. NO. (INNER)	COLOR	WIRE DIA.	MATERIAL	DEFL.	FREE HT.	SPRING O.D.	COMP. HT.	RATE LB/IN
		22.030								22.025								
01	SROH-1-1250	06	BROWN	0.454	ASTM A229 [7]	1.09	4.20	3.00	2.37									1147
02	SROH-1-1700	07	ORANGE	0.499	ASTM A229 [7]	0.95	4.20	3.00	2.59									1789
03	SROH-1-2200	07	ORANGE	0.499	ASTM A229 [7]	0.95	4.20	3.00	2.59	01	GRAY	0.283	ASTM A229 [7]	1.00	4.20	1.84	2.29	2189
04	SROH-1-2465	11	BLUE	0.531	ASTM A401 [6]	1.00	4.20	3.00	2.70									2465
05	SROH-1-2865	11	BLUE	0.531	ASTM A401 [6]	1.00	4.20	3.00	2.70	01	GRAY	0.283	ASTM A229 [7]	1.00	4.20	1.84	2.29	2865

NOTES:
1. ALL DIMENSIONS ARE IN INCHES.
2. WHEN COIL IS AT FREE HT AND LIMIT STOP IS IN CONTACT WITH HSG.
3. MAX. SEISMIC LOAD RATING: 2625 LBS. LOAD RATING IS ASD VALUE.
   FACTOR OF SAFETY = 1.5
4. MATERIAL: MIN. ASTM A36 (HOUSING, TAPPED PLATE, RECTANGULAR WASHER)
5. MIN. TENSILE STRENGTH IS 202 KSI.
6. MIN. TENSILE STRENGTH IS 147 KSI.

REVIEWED FOR CODE COMPLIANCE
HCAi
BY: William Staehlin
DATE: 01.26.2024
FOR CBC 2022 & CRC 2022 BUILDING CODE, 2022

SROH-1-1250/2865 SPRING ASSEMBLY

REGISTERED PROFESSIONAL ENGINEER
MARCIN WASAZNIK
S 6612
STRUCTURAL
STATE OF CALIFORNIA

ISAT
A Division of Tomarco Contractor Specialties
International Seismic Application Technology
14848 Northam Street, La Mirada, CA 90638
877-999-4728 (Toll Free) 714-523-0845 (fax)
www.isatsb.com

Rev. 11/16/18

Page ***H5.2***

INDEX - REFERENCE DOCUMENTS

PAGE	*DESCRIPTION*
X1.1 - X1.2	PROJECT INFORMATION WORKSHEET
	WEIGHT CHARTS
X1.3	ELECTRICAL CONDUIT (EMT, IMC, GRC/RMC)
X1.4	CONDUIT WEIGHT CHARTS (ALUMINUM CONDUCTORS)
X1.5	CONDUIT WEIGHT CHARTS (CAT 6 CABLES)
X2.1	STEEL PIPE (SCH 40, 80)
X2.2	COPPER TUBING (TYPE L, K)
X2.3	NO-HUB CAST IRON PIPE
	SHEET METAL HVAC GALVANIZED DUCT WEIGHT CHARTS
X3.1	ROUND DUCT (34-IN TO 72-IN)
X3.2	RECTANGULAR, SMALL (16 X 60 TO 60 X 60)
X3.3	RECTANGULAR, MEDIUM (16 X 64 TO 72 X 92)
X3.4	RECTANGULAR, LARGE (20 X 96 TO 72 X 120)
	PLASTIC PIPE WEIGHT CHARTS
X4.0	PVC
X4.1	CPVC

INTERNATIONAL SEISMIC APPLICATION TECHNOLOGY

14848 Northam Street
La Mirada, CA 90638
877-999-4728 Phone
714-523-0845 Fax
www.isatsb.com

PROJECT INFORMATION WORKSHEET

DATE: _____

PROJECT NAME: _____

PROJECT ADDRESS: _____

_____ **ZIP CODE:** _____

GENERAL CONTRACTOR: _____

CONTRACTOR ADDRESS: _____ **FAX NO.:** _____

OFFICE CONTACT: _____ **PHONE:** _____ **E-MAIL:** _____

FIELD CONTACT: _____ **PHONE:** _____ **E-MAIL:** _____

SUB-CONTRACTOR: _____ **TRADE:** _____

CONTRACTOR ADDRESS: _____ **FAX NO.:** _____

OFFICE CONTACT: _____ **PHONE:** _____ **E-MAIL:** _____

FIELD CONTACT: _____ **PHONE:** _____ **E-MAIL:** _____

STRUCTURAL ENGINEER OF RECORD: _____ **PHONE:** _____ **E-MAIL:** _____

INSPECTOR: _____ **PHONE:** _____ **E-MAIL:** _____

BUILDING CODE: _____ (CBC 2013, Etc.)

SEISMIC DESIGN CRITERIA: (Refer To Cover Sheet Of Project's Structural Plan Set, S.0)

Note: Data Required In Block 1 Is Crucial. Only Proceed To Fill In Block 2 If Block 1 Data Unavailable.

BLOCK 1 S_{DS} = _____ **SEISMIC DESIGN CATEGORY:** _____ **(A, B, C, D, E, or F)**

Ip = _____ (Component Importance Factor: 1.0 or 1.50)

BLOCK 2 S_{MS} = _____ SITE CLASS(Or Soil Type): _____ (A, B, C, D, E, or F)

Fa = _____ SEISMIC USE GROUP: _____ (I, II, or III)

Ss = _____

ADDITIONAL REQUIRED PROJECT DATA:

AVERAGE ROOF ELEVATION RELATIVE TO GRADE (*h*): _____ (FT.)

EACH FLOORS (FINISHED FLOOR) ELEVATION (*z*) RELATIVE TO GRADE: **FOR REFERENCE ONLY**

BASEMENT	1st FLOOR	2nd FLOOR	3rd FLOOR	4th FLOOR	5th FLOOR	6th FLOOR	7th FLOOR	8th FLOOR

FOR REFERENCE ONLY

CONTINUED ON PAGE X1.2

ISAT PROJECT INFORMATION WORKSHEET, PAGE X1.2

DECK STRUCTURE(S):

	DECK TYPE*	CONCRETE TYPE / DENSITY**	THICKNESS (H)	FLUTE HEIGHT (H_f)
1st FLOOR (FLOOR / BASEMENT CEILING DECK):	_____	_____	_____	_____
OTHER FLOORS (FLOOR / CEILING DECKS):	_____	_____	_____	_____
TOP FLOOR CEILING DECK (ROOF DECK):	_____	_____	_____	_____
MECHANICAL PENTHOUSE CEILING DECK (ROOF DECK):	_____	_____	_____	_____

** EXAMPLE DECK TYPES….FORM POUR SLAB, METAL DECK ("W" DECK), CONCRETE TEES, WAFFLE SLAB, ETC…*
***EXAMPLE: 4000psi NORMAL WEIGHT (HARDROCK), 3000psi LIGHT WEIGHT, ETC…*

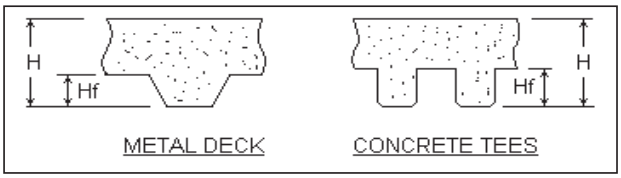

SCHEDULE OF SUSPENDED UTILITIES:

SINGLE HUNG PIPE* OR CONDUIT** TYPE & DIAMETER	TYPE OF CONNECTIONS***	ROD DIA. (IN.)	VERT. SUPPORT SPACING (FT.)	VERT. DROP LENGTH

* STEEL (S), COPPER (C), CAST IRON (CI), VIBRATION ISOLATED (VI)

** EMT (EMT), RIGID STEEL (RS) ***THREADED PIPE, BOLTED, WELDED, ETC…

TRAPEZE TYPE*	WEIGHT (LBS/LF) or DUCT WEIGHT (LBS/LF)	ROD. DIA. (IN.)	VERT. SUPPORT SPACING (FT.)	VERT. DROP LENGTH

*TRAPEZE ABBREVIATIONS: PIPE RACK (PR), VIBRATION ISOLATED PIPE RACK (VPR), CONDUIT RACK (CR), CABLE TRAY (CT), BUS DUCT (BD), HVAC DUCT (DUCT), VIBRATION ISOLATED DUCT (VDUCT), MECHANICAL EQUIPMENT (EQ), VIBRATION ISOLATED MECHANICAL EQUIPMENT (VEQ)

FOR REFERENCE ONLY

ELECTRICAL METALLIC TUBING (EMT) - THINWALL CONDUIT			
Trade Size	Weight of Conduit (Lbs/Lf)	Weight of Conductor (Lbs/Lf)	Combined Weight (Lbs/Lf)
1/2	0.30	0.24	**0.54**
3/4	0.46	0.46	**0.92**
1	0.67	0.71	**1.38**
1 1/4	1.01	1.32	**2.33**
1 1/2	1.16	2.20	**3.36**
2	1.48	3.30	**4.78**
2 1/2	2.16	4.12	**6.28**
3	2.63	6.97	**9.60**
3 1/2	3.49	8.45	**11.94**
4	3.93	9.14	**13.07**

INTERMEDIATE METAL CONDUIT (IMC)			
Trade Size	Weight of Conduit (Lbs/Lf)	Weight of Conductor (Lbs/Lf)	Combined Weight (Lbs/Lf)
1/2	0.60	0.24	**0.84**
3/4	0.82	0.46	**1.28**
1	1.16	0.71	**1.87**
1 1/4	1.50	1.32	**2.82**
1 1/2	1.82	2.20	**4.02**
2	2.42	3.30	**5.72**
2 1/2	4.28	4.12	**8.40**
3	5.26	6.97	**12.23**
3 1/2	6.12	8.45	**14.57**
4	6.82	9.14	**15.96**

RIGID METAL CONDUIT (RMC)			
Trade Size	Weight of Conduit (Lbs/Lf)	Weight of Conductor (Lbs/Lf)	Combined Weight (Lbs/Lf)
1/2	0.82	0.24	**1.06**
3/4	1.09	0.46	**1.55**
1	1.61	0.71	**2.32**
1 1/4	2.18	1.32	**3.50**
1 1/2	2.63	2.20	**4.83**
2	3.50	3.30	**6.80**
2 1/2	5.59	4.12	**9.71**
3	7.27	6.97	**14.24**
3 1/2	8.80	8.45	**17.25**
4	10.30	9.14	**19.44**
5	14.00	16.95	**30.95**
6	18.40	39.30	**57.70**

CONDUIT WEIGHT CHARTS

International Seismic Application Technology
14848 Northam Street, La Mirada, CA 90638
877-999-4728 (Toll Free) 714-523-0845 (fax)
www.isatsb.com

ELECTRICAL METALLIC TUBING (EMT) - THINWALL CONDUIT			
Trade Size	Weight of Conduit (Lbs/Lf)	Weight of Conductor (Lbs/Lf)	Combined Weight (Lbs/Lf)
1/2	0.30	0.09	**0.39**
3/4	0.46	0.17	**0.63**
1	0.67	0.26	**0.93**
1 1/4	1.01	0.47	**1.48**
1 1/2	1.16	0.70	**1.86**
2	1.48	1.12	**2.60**
2 1/2	2.16	1.46	**3.62**
3	2.63	2.30	**4.93**
3 1/2	3.49	2.80	**6.29**
4	3.93	3.42	**7.35**

INTERMEDIATE METAL CONDUIT (IMC)			
Trade Size	Weight of Conduit (Lbs/Lf)	Weight of Conductor (Lbs/Lf)	Combined Weight (Lbs/Lf)
1/2	0.60	0.09	**0.69**
3/4	0.82	0.17	**0.99**
1	1.16	0.26	**1.42**
1 1/4	1.50	0.47	**1.97**
1 1/2	1.82	0.70	**2.52**
2	2.42	1.12	**3.54**
2 1/2	4.28	1.46	**5.74**
3	5.26	2.30	**7.56**
3 1/2	6.12	2.80	**8.92**
4	6.82	3.42	**10.24**

RIGID METAL CONDUIT (RMC)			
Trade Size	Weight of Conduit (Lbs/Lf)	Weight of Conductor (Lbs/Lf)	Combined Weight (Lbs/Lf)
1/2	0.82	0.09	**0.91**
3/4	1.09	0.17	**1.26**
1	1.61	0.26	**1.87**
1 1/4	2.18	0.47	**2.65**
1 1/2	2.63	0.70	**3.33**
2	3.50	1.12	**4.62**
2 1/2	5.59	1.46	**7.05**
3	7.27	2.30	**9.57**
3 1/2	8.80	2.80	**11.60**
4	10.30	3.42	**13.72**
5	14.00	5.86	**19.86**
6	18.40	7.82	**26.22**

CONDUIT WEIGHT CHARTS (ALUMINUM CONDUCTORS)

ELECTRICAL METALLIC TUBING (EMT) - THINWALL CONDUIT			
Trade Size	Weight of Conduit (Lbs/Lf)	Weight of Cable (Lbs/Lf)	Combined Weight (Lbs/Lf)
1/2	0.30	0.05	**0.35**
3/4	0.46	0.09	**0.55**
1	0.67	0.19	**0.86**
1 1/4	1.01	0.28	**1.29**
1 1/2	1.16	0.44	**1.60**
2	1.48	0.75	**2.23**
2 1/2	2.16	1.18	**3.34**
3	2.63	1.71	**4.34**
3 1/2	3.49	2.33	**5.82**
4	3.93	3.05	**6.98**

INTERMEDIATE METAL CONDUIT (IMC)			
Trade Size	Weight of Conduit (Lbs/Lf)	Weight of Cable (Lbs/Lf)	Combined Weight (Lbs/Lf)
1/2	0.60	0.05	**0.65**
3/4	0.82	0.09	**0.91**
1	1.16	0.19	**1.35**
1 1/4	1.50	0.28	**1.78**
1 1/2	1.82	0.44	**2.26**
2	2.42	0.75	**3.17**
2 1/2	4.28	1.18	**5.46**
3	5.26	1.71	**6.97**
3 1/2	6.12	2.33	**8.45**
4	6.82	3.05	**9.87**

RIGID METAL CONDUIT (RMC)			
Trade Size	Weight of Conduit (Lbs/Lf)	Weight of Cable (Lbs/Lf)	Combined Weight (Lbs/Lf)
1/2	0.82	0.05	**0.87**
3/4	1.09	0.09	**1.18**
1	1.61	0.19	**1.80**
1 1/4	2.18	0.28	**2.46**
1 1/2	2.63	0.44	**3.07**
2	3.50	0.75	**4.25**
2 1/2	5.59	1.18	**6.77**
3	7.27	1.71	**8.98**
3 1/2	8.80	2.33	**11.1**
4	10.30	3.05	**13.3**
5	14.00	3.76	**17.8**
6	18.40	5.47	**23.9**

CONDUIT WEIGHT CHARTS (CAT 6 CABLES)

REGISTERED PROFESSIONAL ENGINEER
MARCIN WASAZNIK
S 6612
STRUCTURAL
STATE OF CALIFORNIA

ISAT
A Division of Tomarco Contractor Specialties

International Seismic Application Technology
14848 Northam Street, La Mirada, CA 90638
877-999-4728 (Toll Free) 714-523-0845 (fax)
www.isatsb.com

Rev. 0
02/19/19

Page
X1.5

STEEL PIPE DATA: SCHEDULE 40 & STD.							
Schedule	Pipe Dia. Inch	Pipe Weight Empty Lbs/Lf	Weight of Water Lbs/Lf	Pipe Weight Full Lbs/Lf	Insulation Thickness* Inch	Insulation Weight Lbs/Lf	Pipe Weight Full & Insulated Lbs/Lf
40	1/2	0.85	0.13	1.0	1"	0.46	1.5
	3/4	1.13	0.23	1.4	1"	0.43	1.8
	1	1.70	0.37	2.1	1"	0.6	2.7
	1 1/2	2.70	0.88	3.6	1"	0.66	4.2
	2	3.60	1.45	5.1	1"	0.84	5.9
	2 1/2	5.80	2.07	7.9	1"	0.96	8.8
	3	7.60	3.20	10.8	1"	1.06	11.9
	4	10.80	5.51	16.3	2"	3.18	19.5
	5	14.62	8.66	23.3	2"	3.61	26.9
	6	19.00	12.51	31.5	2"	4.21	35.7
	8	28.50	21.60	50.1	2"	5.14	55.2
	10	40.50	34.10	74.6	2"	6.35	81.0
STD	12	49.70	48.50	98.2	2"	7.33	105.5
	14	54.70	59.75	114.5	2"	7.42	121.9
	16	62.70	79.12	141.8	2"	8.34	150.2
	18	70.80	101.18	172.0	2"	9.20	181.2
	20	78.80	125.67	204.5	2"	10.10	214.6
	24	94.62	183.95	278.6	2"	11.87	290.4
	26	102.63	216.99	319.6	2"	12.78	332.4
	28	110.64	252.73	363.4	2"	13.69	377.1
	30	118.65	291.18	409.8	2"	14.53	424.4
	36	142.70	422.89	565.6	2"	40.00	605.6

* Fiber Glass Pipe Insulation With ASJ

STEEL PIPE DATA: SCHEDULE 80							
Schedule	Pipe Dia. Inch	Pipe Weight Empty Lbs/Lf	Weight of Water Lbs/Lf	Pipe Weight Full Lbs/Lf	Insulation Thickness* Inch	Insulation Weight Lbs/Lf	Pipe Weight Full & Insulated Lbs/Lf
80	1/2"	1.09	0.10	1.2	1"	0.46	1.7
	3/4"	1.47	0.19	1.7	1"	0.43	2.1
	1"	2.17	0.31	2.5	1"	0.6	3.1
	1 1/2"	3.63	0.77	4.4	1"	0.66	5.1
	2"	5.02	1.28	6.3	1"	0.84	7.1
	2 1/2"	7.66	1.83	9.5	1"	0.96	10.5
	3"	10.25	2.86	13.1	1"	1.06	14.2
	4"	14.98	4.98	20.0	2"	3.18	23.1
	5"	20.78	7.87	28.7	2"	3.61	32.3
	6"	28.57	11.29	39.9	2"	4.21	44.1
	8"	43.39	19.80	63.2	2"	5.14	68.3
	10"	64.42	31.11	95.5	2"	6.35	101.9

* Fiber Glass Pipe Insulation With ASJ

STEEL PIPE WEIGHT CHARTS

REGISTERED PROFESSIONAL ENGINEER
MARCIN WASAZNIK
S 6612
STRUCTURAL
STATE OF CALIFORNIA

International Seismic Application Technology
14848 Northam Street, La Mirada, CA 90638
877-999-4728 (Toll Free) 714-523-0845 (fax)
www.isatsb.com
A Division of Tomarco Contractor Specialties

TYPE K COPPER TUBING						
Dia. Inch	Pipe Weight Empty Lbs/Lf	Weight of Water Lbs/Lf	Pipe Weight Full Lbs/Lf	Insulation Thickness Inch	Insulation Weight* Lbs/Lf	Pipe Weight Full & Insulated Lbs/Lf
1/2	0.34	0.09	0.4	1"	0.46	0.9
3/4	0.64	0.19	0.8	1"	0.43	1.3
1	0.84	0.34	1.2	1"	0.6	1.8
1 1/2	1.36	0.74	2.1	1"	0.66	2.8
2	2.06	1.31	3.4	1"	0.84	4.2
2 1/2	2.92	2	4.9	1"	0.96	5.9
3	4.01	2.96	7.0	1"	1.06	8.0
3 1/2	5.12	3.9	9.0	1"	1.66	10.7
4	6.51	5.06	11.6	2"	3.18	14.8
5	9.67	8	17.7	2"	3.61	21.3
6	13.87	11.2	25.1	2"	4.21	29.3
8	25.9	19.5	45.4	2"	5.14	50.5
10	40.3	30.42	70.7	2"	6.35	77.1
12	57.8	43.68	101.5	2"	7.33	108.8

* Fiber Glass Pipe Insulation With ASJ

TYPE L COPPER TUBING						
Dia. Inch	Pipe Weight Empty Lbs/Lf	Weight of Water Lbs/Lf	Pipe Weight Full Lbs/Lf	Insulation Thickness Inch	Insulation Weight* Lbs/Lf	Pipe Weight Full & Insulated Lbs/Lf
1/2	0.29	0.1	0.4	1"	0.46	0.9
3/4	0.46	0.21	0.7	1"	0.43	1.1
1	0.66	0.36	1.0	1"	0.6	1.6
1 1/2	1.14	0.77	1.9	1"	0.66	2.6
2	1.75	1.34	3.1	1"	0.84	3.9
2 1/2	2.48	2.06	4.5	1"	0.96	5.5
3	3.33	2.95	6.3	1"	1.06	7.3
3 1/2	4.29	3.99	8.3	1"	1.66	9.9
4	5.38	5.19	10.6	2"	3.18	13.8
5	7.61	8.08	15.7	2"	3.61	19.3
6	10.2	11.62	21.8	2"	4.21	26.0
8	19.29	20.29	39.6	2"	5.14	44.7
10	30.1	31.59	61.7	2"	6.35	68.0
12	40.4	45.42	85.8	2"	7.33	93.2

* Fiber Glass Pipe Insulation With ASJ

COPPER TUBING WEIGHT CHARTS

NO-HUB CAST IRON PIPE			
Dia. Inch	Pipe Weight Empty Lbs/Lf	Weight of Water Lbs/Lf	Pipe Weight Full Lbs/Lf
2	3.60	1.36	5.0
3	5.20	3.06	8.3
4	7.40	5.44	12.8
5	9.40	8.50	17.9
6	11.00	12.23	23.2
8	18.00	21.75	39.7
10	25.80	33.98	59.8
12	35.50	48.93	84.4
15	51.50	76.46	128.0

N0-HUB CAST IRON PIPE WEIGHT CHART

REGISTERED PROFESSIONAL ENGINEER
MARCIN WASAZNIK
S 6612
STRUCTURAL
STATE OF CALIFORNIA

ISAT
A Division of Tomarco Contractor Specialties
International Seismic Application Technology
14848 Northam Street, La Mirada, CA 90638
877-999-4728 (Toll Free) 714-523-0845 (fax)
www.isatsb.com

Rev. 2
03/07/16

Page
X2.3

ROUND HVAC DUCT - GALVANIZED STEEL DUCT AREA ≥ 6 SQUARE FEET			
Diameter Inches	Insul. Thick [1] Inches	Sht Metal Gage	Weight Lbs / LF [2]
34	2	20	15
36	2	20	16
38	2	20	17
40	2	20	18
42	2	28	24
48	2	28	27
54	2	28	30
60	2	28	34
66	2	26	46
72	2	26	50

1. INSULATION THICKNESS SHOWN IS FOR WEIGHT ESTIMATE ONLY. FOIL FACED FIBERGLASS INSULATION AT 1.5 POUNDS PER CUBIC FOOT IS USED.
2. BASED ON POSITIVE PRESSURE WITH INSULATION OR A NEGATIVE PRESSURE OF 4 INCHES OF WATER WITH NO INSULATION.

ROUND DUCT WEIGHT CHART

REGISTERED PROFESSIONAL ENGINEER
MARCIN WASAZNIK
S 6612
STRUCTURAL
STATE OF CALIFORNIA

International Seismic Application Technology
14848 Northam Street, La Mirada, CA 90638
877-999-4728 (Toll Free) 714-523-0845 (fax)
www.isatsb.com
A Division of Tomarco Contractor Specialties

Rev. 3
03/07/16

Page
X3.1

RECTANGULAR GALVANIZED STEEL DUCT FROM 16X60 TO 60x60

Inches	30	32	34	36	40	44	48	52	56	60	Property
16									25.8	27.3	Duct Wt.
									28.8	30.4	Wt. Per Ft. with 2-in. Insulation
18							23.7	25.1	26.6	28.0	Duct Wt.
							26.4	28.0	29.6	31.2	Wt. Per Ft. with 2-in. Insulation
20						23.0	24.4	25.8	27.3	28.7	Duct Wt.
						25.6	27.2	28.8	30.4	32.0	Wt. Per Ft. with 2-in. Insulation
22					22.2	23.7	25.1	26.6	28.0	29.4	Duct Wt.
					24.8	26.4	28.0	29.6	31.2	32.8	Wt. Per Ft. with 2-in. Insulation
24				18.3	23.0	24.4	25.8	27.3	28.7	30.1	Duct Wt.
				20.8	25.6	27.2	28.8	30.4	32.0	33.6	Wt. Per Ft. with 2-in. Insulation
26			18.3	18.9	23.7	25.1	26.6	28.0	29.4	30.9	Duct Wt.
			21.0	21.0	26.0	28.0	30.0	31.0	33.0	34.0	Wt. Per Ft. with 2-in. Insulation
28		18.3	18.9	19.5	24.4	25.8	27.3	28.7	30.1	31.6	Duct Wt.
		20.8	21.5	22.2	27.2	28.8	30.4	32.0	33.6	35.2	Wt. Per Ft. with 2-in. Insulation
30	18.3	18.9	19.5	20.1	25.1	26.6	28.0	29.4	30.9	32.0	Duct Wt.
	20.8	21.5	22.2	22.9	28.0	29.6	31.2	32.8	34.4	35.8	Wt. Per Ft. with 2-in. Insulation
36		20.1	20.7	21.3	25.8	27.3	30.1	31.6	33.0	34.4	Duct Wt.
		23.5	24.2	24.9	30.4	32.0	33.6	35.2	36.8	38.4	Wt. Per Ft. with 2-in. Insulation
40		21.9	22.5	23.2	28.7	30.1	31.6	33.0	34.4	35.9	Duct Wt.
		24.9	25.6	26.3	32.0	33.6	35.2	36.8	38.4	40.0	Wt. Per Ft. with 2-in. Insulation
44						31.6	33.0	34.4	35.9	37.3	Duct Wt.
						35.2	36.8	38.4	40.0	41.6	Wt. Per Ft. with 2-in. Insulation
48							34.4	35.9	37.3	38.8	Duct Wt.
							38.4	40.0	41.6	43.3	Wt. Per Ft. with 2-in. Insulation
54									39.5	40.9	Duct Wt.
									44.1	45.7	Wt. Per Ft. with 2-in. Insulation
60										43.1	Duct Wt.
										48.1	Wt. Per Ft. with 2-in. Insulation

DUCT WEIGHT CHART
RECTANGULAR GALVANIZED STEEL DUCT 16 x 60 TO 60 x 60

REGISTERED PROFESSIONAL ENGINEER
MARCIN WASAZNIK
S 6612
STRUCTURAL
STATE OF CALIFORNIA

ISAT
A Division of Tomarco Contractor Specialties

International Seismic Application Technology
14848 Northam Street, La Mirada, CA 90638
877-999-4728 (Toll Free) 714-523-0845 (fax)
www.isatsb.com

Rev. 2
02/24/17

Page
X3.2

RECTANGULAR GALVANIZED STEEL DUCT FROM 16X64 TO 72x92									
Inches	64	68	72	76	80	84	88	92	Property
16	28.7	30.1	31.6	43.0	44.8				Duct Wt.
	32.0	33.6	35.2	46.8	48.8				Wt. Per Ft. with 2-in Insulation
18	29.4	30.9	32.3	43.9	45.8	47.6	49.5	51.4	Duct Wt.
	32.8	34.4	36.0	47.8	49.9	51.9	53.9	56.0	Wt. Per Ft. with 2-in Insulation
20	30.1	31.6	33.0	44.8	46.7	48.6	50.5	52.3	Duct Wt.
	33.6	35.2	36.8	48.8	50.9	52.9	55.0	57.0	Wt. Per Ft. with 2-in Insulation
22	30.9	32.3	33.7	45.8	47.6	49.5	51.4	53.3	Duct Wt.
	34.4	36.0	37.6	49.9	51.9	53.9	56.0	58.0	Wt. Per Ft. with 2-in Insulation
24	31.6	33.0	34.4	46.7	48.6	50.5	52.3	54.2	Duct Wt.
	35.2	36.8	38.4	50.9	52.9	55.0	57.0	59.0	Wt. Per Ft. with 2-in Insulation
26	32.3	33.7	35.2	47.6	49.5	51.4	53.3	53.0	Duct Wt.
	36.0	37.6	39.2	51.9	53.9	56.0	58.0	60.0	Wt. Per Ft. with 2-in Insulation
28	33.0	34.4	35.8	48.6	50.5	52.3	54.2	56.1	Duct Wt.
	36.8	38.4	40.0	52.9	55.0	57.0	59.0	61.1	Wt. Per Ft. with 2-in Insulation
30	33.7	35.2	36.6	49.5	51.4	53.3	55.1	57.0	Duct Wt.
	37.6	39.2	40.8	53.9	56.0	58.0	60.0	62.1	Wt. Per Ft. with 2-in Insulation
36	35.9	37.3	38.8	52.3	54.2	56.1	57.9	59.8	Duct Wt.
	40.0	41.6	43.3	57.0	59.0	61.1	63.1	65.0	Wt. Per Ft. with 2-in Insulation
40	37.3	38.8	40.2	54.2	56.1	57.9	59.8	61.7	Duct Wt.
	41.6	43.3	44.9	59.0	61.1	63.1	65.1	67.2	Wt. Per Ft. with 2-in Insulation
44	38.8	40.2	41.6	56.1	57.9	59.8	61.7	63.5	Duct Wt.
	43.3	44.9	46.5	61.1	63.1	65.1	67.2	69.2	Wt. Per Ft. with 2-in Insulation
48	40.2	41.6	43.1	57.9	59.8	61.7	63.5	65.4	Duct Wt.
	44.9	46.5	48.1	63.1	65.1	67.2	69.2	71.2	Wt. Per Ft. with 2-in Insulation
54	42.3	43.8	45.2	60.7	62.6	64.5	66.3	68.2	Duct Wt.
	47.3	48.9	50.5	66.1	68.2	70.2	72.2	74.3	Wt. Per Ft. with 2-in Insulation
60	44.5	45.9	47.4	63.5	65.4	67.3	69.1	71.0	Duct Wt.
	49.7	51.3	52.9	69.2	71.2	73.3	75.3	77.3	Wt. Per Ft. with 2-in Insulation
66		48.1	49.5	66.3	68.2	70.1	71.9	73.8	Duct Wt.
		53.7	55.3	72.2	74.3	76.3	78.4	80.4	Wt. Per Ft. with 2-in Insulation
72			51.7	69.1	71.0	72.9	74.7	76.6	Duct Wt.
			57.7	75.3	77.3	79.4	81.4	83.4	Wt. Per Ft. with 2-in Insulation

DUCT WEIGHT CHART
RECTANGULAR GALVANIZED STEEL DUCT 16 x 64 TO 72 x 92

REGISTERED PROFESSIONAL ENGINEER
MARCIN WASAZNIK
S 6612
STRUCTURAL
STATE OF CALIFORNIA

ISAT
A Division of Tomarco Contractor Specialties

International Seismic Application Technology
14848 Northam Street, La Mirada, CA 90638
877-999-4728 (Toll Free) 714-523-0845 (fax)
www.isatsb.com

Rev. 10
05/30/23

Page
X3.3

RECTANGULAR GALVANIZED STEEL DUCT FROM 20X96 TO 72x120								
Inches	96	100	104	108	112	116	120	Property
20	54.2	56.1						Duct Wt.
	59.0	61.1						Wt. Per Ft. with 2-in Insulation
22	55.1	57.0	58.9	60.7	62.6			Duct Wt.
	60.0	62.1	64.1	66.1	68.2			Wt. Per Ft. with 2-in Insulation
24	56.1	57.9	59.8	61.7	63.5	65.4	67.3	Duct Wt.
	61.1	63.1	65.1	67.2	69.2	71.2	73.3	Wt. Per Ft. with 2-in Insulation
26	57.0	58.9	60.7	62.6	64.5	66.3	68.2	Duct Wt.
	62.1	64.1	66.1	68.2	70.2	72.2	74.3	Wt. Per Ft. with 2-in Insulation
28	57.9	59.8	61.7	63.5	65.4	67.3	69.1	Duct Wt.
	63.1	65.1	67.2	69.2	71.2	73.3	75.3	Wt. Per Ft. with 2-in Insulation
30	58.9	60.7	62.6	64.5	66.3	68.2	70.1	Duct Wt.
	64.1	66.1	68.2	70.2	72.2	74.3	76.3	Wt. Per Ft. with 2-in Insulation
36	61.7	63.5	65.4	67.3	69.1	71.0	72.9	Duct Wt.
	67.2	69.2	71.2	73.3	75.3	77.3	79.4	Wt. Per Ft. with 2-in Insulation
40	63.5	65.4	67.3	69.1	71.0	72.9	74.7	Duct Wt.
	69.2	71.2	73.3	75.3	77.3	79.4	81.4	Wt. Per Ft. with 2-in Insulation
44	65.4	67.3	69.1	71.0	72.9	74.7	76.6	Duct Wt.
	71.2	73.3	75.3	77.3	79.4	81.4	83.4	Insulation Thickness Wt. Per Ft. with
48	67.3	69.1	71.0	72.9	74.7	76.6	78.5	Duct Wt.
	73.3	75.3	77.3	79.4	81.4	83.4	85.5	Wt. Per Ft. with 2-in Insulation
54	70.1	71.9	73.8	75.7	77.5	79.4	81.3	Duct Wt.
	76.3	78.4	80.4	82.4	84.5	86.5	88.5	Wt. Per Ft. with 2-in Insulation
60	72.9	74.7	76.6	78.5	80.3	82.2	84.1	Duct Wt.
	79.4	81.4	83.4	85.5	87.5	89.5	91.6	Wt. Per Ft. with 2-in Insulation
66	75.7	77.5	79.4	81.3	83.1	85.0	86.9	Duct Wt.
	82.4	84.5	86.5	88.5	90.6	92.6	94.6	Wt. Per Ft. with 2-in Insulation
72	78.5	80.3	82.2	84.1	86.0	87.8	89.7	Duct Wt.
	85.5	87.5	89.5	91.6	93.6	95.7	97.7	Wt. Per Ft. with 2-in Insulation

DUCT WEIGHT CHART
RECTANGULAR GALVANIZED STEEL DUCT 20 x 96 TO 72 x 120

REGISTERED PROFESSIONAL ENGINEER MARCIN WASAZNIK S-6612 STRUCTURAL STATE OF CALIFORNIA

ISAT
A Division of Tomarco Contractor Specialties

International Seismic Application Technology
14848 Northam Street, La Mirada, CA 90638
877-999-4728 (Toll Free) 714-523-0845 (fax)
www.isatsb.com

Rev. 9
05/31/17

Page
X3.4

Plastic Pipe Weight Charts						
Schedule 40 PVC						
Dia. Inch	Pipe I.D.	Pipe O.D.	Wall Thickness	Empty Pipe Weight (lbs/ft)	Water Weight	Pipe Weight Full (lbs/ft)
1/8	0.269	0.405	0.068	0.04	0.02	0.07
1/4	0.364	0.54	0.088	0.08	0.05	0.12
3/8	0.493	0.675	0.091	0.10	0.08	0.18
1/2	0.622	0.84	0.109	0.15	0.13	0.28
3/4	0.824	1.05	0.113	0.20	0.23	0.43
1	1.049	1.315	0.133	0.30	0.37	0.67
1 1/4	1.38	1.66	0.14	0.41	0.65	1.05
1 1/2	1.61	1.9	0.145	0.49	0.88	1.37
2	2.067	2.375	0.154	0.65	1.45	2.11
2 1/2	2.469	2.875	0.203	1.03	2.07	3.11
3	3.068	3.5	0.216	1.35	3.20	4.56
3 1/2	3.548	4	0.226	1.63	4.28	5.91
4	4.026	4.5	0.237	1.93	5.52	7.44
5	5.047	5.563	0.258	2.61	8.67	11.28
6	6.065	6.625	0.28	3.39	12.52	15.91
8	7.981	8.625	0.322	5.10	21.68	26.78
10	10.02	10.75	0.365	7.23	34.17	41.40
12	11.938	12.75	0.406	9.56	48.50	58.06
14	13.126	14	0.437	11.31	58.64	69.94
16	15	16	0.5	14.78	76.58	91.36
18	16.876	18	0.562	18.69	96.93	115.62
20	18.814	20	0.593	21.95	120.47	142.42
24	22.626	24	0.687	30.55	174.23	204.78

Schedule 80 PVC						
Dia. Inch	Pipe I.D.	Pipe O.D.	Wall Thickness	Empty Pipe Weight (lbs/ft)	Water Weight	Pipe Weight Full (lbs/ft)
1/8	0.215	0.405	0.095	0.06	0.02	0.07
1/4	0.302	0.54	0.119	0.10	0.03	0.13
3/8	0.423	0.675	0.126	0.13	0.06	0.19
1/2	0.546	0.84	0.147	0.19	0.10	0.30
3/4	0.742	1.05	0.154	0.26	0.19	0.45
1	0.957	1.315	0.179	0.39	0.31	0.70
1 1/4	1.278	1.66	0.191	0.54	0.56	1.09
1 1/2	1.5	1.9	0.2	0.65	0.77	1.41
2	1.939	2.375	0.218	0.90	1.28	2.18
2 1/2	2.323	2.875	0.276	1.37	1.84	3.20
3	2.9	3.5	0.3	1.83	2.86	4.69
3 1/2	3.364	4	0.318	2.23	3.85	6.08
4	3.826	4.5	0.337	2.68	4.98	7.66
5	4.813	5.563	0.375	3.71	7.88	11.60
6	5.761	6.625	0.432	5.10	11.30	16.40
8	7.625	8.625	0.5	7.75	19.79	27.54
10	9.564	10.75	0.593	11.49	31.13	42.62
12	11.376	12.75	0.687	15.81	44.04	59.85
14	12.5	14	0.75	18.96	53.18	72.13
16	14.314	16	0.843	24.37	69.73	94.11
18	16.126	18	0.937	30.50	88.50	119.00
20	17.938	20	1.031	37.31	109.51	146.82
24	21.564	24	1.218	52.93	158.26	211.19

PLASTIC PIPE WEIGHT CHARTS (PVC)

REGISTERED PROFESSIONAL ENGINEER
MARCIN WASAZNIK
S-6612
STRUCTURAL
STATE OF CALIFORNIA

ISAT
A Division of Tomarco Contractor Specialties
International Seismic Application Technology
14848 Northam Street, La Mirada, CA 90638
877-999-4728 (Toll Free) 714-523-0845 (fax)
www.isatsb.com

Rev. 0
05/30/23

Page
X4.0

Plastic Pipe Weight Charts						
Schedule 40 CPVC						
Dia. Inch	Pipe I.D.	Pipe O.D.	Wall Thickness	Empty Pipe Weight (lbs/ft)	Water Weight	Pipe Weight Full (lbs/ft)
1/8	0.269	0.405	0.068	0.05	0.02	0.07
1/4	0.364	0.54	0.088	0.08	0.05	0.13
3/8	0.493	0.675	0.091	0.11	0.08	0.19
1/2	0.622	0.84	0.109	0.16	0.13	0.30
3/4	0.824	1.05	0.113	0.22	0.23	0.45
1	1.049	1.315	0.133	0.32	0.37	0.70
1 1/4	1.38	1.66	0.14	0.44	0.65	1.09
1 1/2	1.61	1.9	0.145	0.52	0.88	1.41
2	2.067	2.375	0.154	0.70	1.45	2.16
2 1/2	2.469	2.875	0.203	1.12	2.07	3.19
3	3.068	3.5	0.216	1.46	3.20	4.66
3 1/2	3.548	4	0.226	1.76	4.28	6.04
4	4.026	4.5	0.237	2.08	5.52	7.60
5	5.047	5.563	0.258	2.82	8.67	11.49
6	6.065	6.625	0.28	3.66	12.52	16.18
8	7.981	8.625	0.322	5.50	21.68	27.18
10	10.02	10.75	0.365	7.80	34.17	41.97
12	11.938	12.75	0.406	10.32	48.50	58.82
14	13.126	14	0.437	12.20	58.64	70.84
16	15	16	0.5	15.95	76.58	92.53
18	16.876	18	0.562	20.17	96.93	117.10
20	18.814	20	0.593	23.69	120.47	144.16
24	22.626	24	0.687	32.97	174.23	207.20

Schedule 80 CPVC						
Dia. Inch	Pipe I.D.	Pipe O.D.	Wall Thickness	Empty Pipe Weight (lbs/ft)	Water Weight	Pipe Weight Full (lbs/ft)
1/8	0.215	0.405	0.095	0.06	0.02	0.08
1/4	0.302	0.54	0.119	0.10	0.03	0.13
3/8	0.423	0.675	0.126	0.14	0.06	0.20
1/2	0.546	0.84	0.147	0.21	0.10	0.31
3/4	0.742	1.05	0.154	0.28	0.19	0.47
1	0.957	1.315	0.179	0.42	0.31	0.73
1 1/4	1.278	1.66	0.191	0.58	0.56	1.13
1 1/2	1.5	1.9	0.2	0.70	0.77	1.47
2	1.939	2.375	0.218	0.97	1.28	2.25
2 1/2	2.323	2.875	0.276	1.48	1.84	3.31
3	2.9	3.5	0.3	1.98	2.86	4.84
3 1/2	3.364	4	0.318	2.41	3.85	6.26
4	3.826	4.5	0.337	2.89	4.98	7.87
5	4.813	5.563	0.375	4.00	7.88	11.89
6	5.761	6.625	0.432	5.51	11.30	16.80
8	7.625	8.625	0.5	8.36	19.79	28.15
10	9.564	10.75	0.593	12.40	31.13	43.53
12	11.376	12.75	0.687	17.06	44.04	61.10
14	12.5	14	0.75	20.46	53.18	73.63
16	14.314	16	0.843	26.30	69.73	96.03
18	16.126	18	0.937	32.91	88.50	121.41
20	17.938	20	1.031	40.26	109.51	149.77
24	21.564	24	1.218	57.12	158.26	215.38

PLASTIC PIPE WEIGHT CHARTS (CPVC)

REGISTERED PROFESSIONAL ENGINEER
MARCIN WASAZNIK
S 6612
STRUCTURAL
STATE OF CALIFORNIA

ISAT
A Division of Tomarco Contractor Specialties

International Seismic Application Technology
14848 Northam Street, La Mirada, CA 90638
877-999-4728 (Toll Free) 714-523-0845 (fax)
www.isatsb.com

Rev. 0
05/30/23

Page
X4.1