APPLICATION FOR HCAI PREAPPROVAL OF MANUFACTURER'S CERTIFICATION (OPM)

OFFICE USE ONLY

APPLICATION #: OPM-0043

HCAI Preapproval of Manufacturer's Certification (OPM)

Type: ☐ New ☒ Renewal/Update

Manufacturer Information

Manufacturer: Mason West

Manufacturer's Technical Representative: Todd Noce

Mailing Address: 1601 East Miraloma, Placentia, CA 92870

Telephone: (714) 630-0701 Email: tnoce@masonwest.com

Product Information

Product Name: SEISMIC RESTRAINT COMPONENTS FOR SUSPENDED UTILITIES

Product Type: Seismic Restraint Components for Suspended Utilities

Product Model Number: SHB, UCC, SRC, SSBS, SCB, SCBH, SAS(E), SSB, Z-1011, CHS;, MW-PAL-A, WPL, SAP, KY, SSN, BON, UCC-BON, SCBBON, WBB, SPC, SSC, SSCE, SCC, SCCI

General Description: Seismic Restraint Guidelines for Suspended Distribution Systems

REVIEWED FOR CODE COMPLIANCE
HCAi
BY: William Staehlin
DATE: 01/23/2023
CALIFORNIA BUILDING CODE, 2022

Applicant Information

Applicant Company Name: Mason Industries

Contact Person: Luke Do

Mailing Address: 2101 West Crescent, Ste D, Anaheim, CA 92801

Telephone: (714) 535-2727 Email: ldo@mason-ind.com

Title: Engineering Manager

Registered Design Professonal Preparing Engineering Recommendations

Company Name: MASON INDUSTRIES

Name: Gummadi Reddy California License Number: CE29627

Mailing Address: 2101 W. Crescent Ave., Ste. D, Anaheim, CA 92801

Telephone: (714) 535-2727 Email: HCAIPlaceholder@HCAI.ca.gov

HCAI Special Seismic Certification Preapproval (OSP)

☐ Special Seismic Certification is preapproved under OSP OSP Number:

Certification Method

Testing in accordance with: ☐ ICC-ES AC156 ☒ FM 1950-16

☐ Other(s) (Please Specify):

*Use of criteria other than those adopted by the California Building Standards Code, 2019 (CBSC 2019) for component supports and attachments are not permitted. For distribution system, interior partition wall, and suspended ceiling seismic bracings, test criteria other than those adopted in the CBSC 2019 may be used when approved by HCAI prior to testing.

☐ Analysis

☐ Experience Data

☐ Combination of Testing, Analysis, and/or Experience Data (Please Specify):

REVIEWED FOR CODE COMPLIANCE
HCAI
OPM-0043
BY: William Staehlin
DATE: 01/23/2023
CALIFORNIA BUILDING CODE, 2022

HCAI Approval

Date: 1/23/2023

Name: William Staehlin Title: Senior Structural Engineer

Condition of Approval (if applicable):

MASON WEST

SEISMIC RESTRAINT GUIDELINES FOR SUSPENDED DISTRIBUTION SYSTEMS

8TH EDITION, 2022

OPM-0043

REVIEWED FOR CODE COMPLIANCE
CALIFORNIA BUILDING CODE, 2022
HCAI
OPM-0043
BY: William Staehlin
DATE: 01-23-2023



TABLE OF CONTENTS
MECHANICAL, PLUMBING, AND FIRE PROTECTION PIPE

	PAGE(S)
DESIGN GENERAL NOTES	A0.1 - A0.7
GENERAL NOTES	A10.0 - A10.8
DESIGN PROCEDURE	A11.0 - A11.12
LAYOUT OF SEISMIC BRACING	A12.0 - A12.9
12" RULE FOR SUSPENDED PIPING	A13.0
TRANSVERSE BRACE ALLOWABLE BRACE ANGLE VARIATION IN PLAN	A14.0 - A14.1
ALTERNATE ARRANGEMENT OF SEISMIC BRACES	A15.0 - A15.5
ATTACHMENT OPTIONS FOR PIPING TO TRAPEZE	A16.0 - A16.4
INSTALLATION OPTION - OFF STRUT HANGER	A18.0 - A18.7
INSTALLATION OPTION - PIPE CLAMP	A19.0 - A19.1
INSTALLATION OPTION - INDIVIDUALLY SUSPENDED PIPING	A19.2 - A19.7
SEISMIC BRACE TABLES	B1.0 - B1.20
INDIVIDUALLY HUNG PIPE - KIT INSTALLATION DETAILS - SOLID (RIGID) BRACING	C1.10 - C1.75
INDIVIDUALLY HUNG PIPE - KIT INSTALLATION DETAILS - CABLE BRACING (STANDARD)	C2.10 - C2.52
INDIVIDUALLY HUNG PIPE - KIT INSTALLATION DETAILS - WALL ATTACHMENT	C3.10 - C3.30
TRAPEZE SUPPORTED PIPE - KIT INSTALLATION DETAILS - SOLID (RIGID) BRACING	F1.10 - F1.75
TRAPEZE SUPPORTED PIPE - KIT INSTALLATION DETAILS - CABLE BRACING (STANDARD)	F2.10 - F2.42
TRAPEZE SUPPORTED PIPE - KIT INSTALLATION DETAILS - CABLE BRACING (X - PATTERN)	F3.10 - F3.13
TRAPEZE SUPPORTED PIPE - KIT INSTALLATION DETAILS - WALL ATTACHMENT	F4.10 - F4.32
HANGER - STRUCTURE ATTACHMENT DETAILS	M0.00 - M9.10
HANGER INSTALLATION DETAILS WITH ROD STIFFENER	M10.10 - M10.12
BRACE - STRUCTURE ATTACHMENT DETAILS	N0.00 - N7.10
SUPPLEMENTAL STEEL DETAILS	P1.10 - P1.12
PIPE BRACE SPACING TABLES	S1.0 - S1.5
PIPE CLAMP SPACING TABLES	S3.0 - S3.2.1
TRAPEZE SELECTION TABLES	T2.0 - T2.7
COMPONENTS	X1.0 - X9.0.9

REVIEWED FOR CODE COMPLIANCE
HCAI
OPM-0043
BY: William Staehlin
DATE: 01/23/2023
CALIFORNIA BUILDING CODE, 2022

MASON WEST
1601 E. Miraloma Ave. Placentia, CA 92870
TEL (714) 630 - 0701, www.masonwest.com

Jiefu "Jeff" Zhang, SE
California SE No. S5270

PAGE
TOC-C

TABLE OF CONTENTS
DUCTWORK

	PAGE(S)
DESIGN GENERAL NOTES	A0.1 - A0.7
GENERAL NOTES	A1.0 - A1.6
DESIGN PROCEDURE	A2.0 - A2.3
LAYOUT OF SEISMIC BRACING	A3.0 - A3.2
12" RULE FOR SUSPENDED DUCTWORK	A4.0
TRANSVERSE BRACE ALLOWABLE BRACE ANGLE VARIATION IN PLAN	A5.0
ALTERNATE ARRANGEMENT OF SEISMIC BRACES	A6.0 - 6.2
INSTALLATION OPTION - OFF STRUT HANGER	A7.0 - A7.3
SEISMIC BRACE TABLES	B2.0 - B4.5
RECTANGULAR DUCT - KIT INSTALLATION DETAILS - SOLID (RIGID) BRACING	D1.10 - D1.35
ROUND DUCT - KIT INSTALLATION DETAILS - SOLID (RIGID) BRACING	D2.10 - D2.32
FACTORY BUILT VENT DUCT - KIT INSTALLATION DETAILS - SOLID (RIGID) BRACING	D3.10 - D3.22
RECTANGULAR DUCT - KIT INSTALLATION DETAILS - CABLE BRACING (STANDARD)	D4.10 - D4.32
RECTANGULAR DUCT - KIT INSTALLATION DETAILS - CABLE BRACING (X - PATTERN)	D5.10 - D5.12
ROUND DUCT - KIT INSTALLATION DETAILS - CABLE BRACING (STANDARD)	D6.10 - D6.22
ROUND DUCT - KIT INSTALLATION DETAILS - CABLE BRACING (X - PATTERN)	D7.10 - D7.12
FACTORY BUILT VENT DUCT - KIT INSTALLATION DETAILS - CABLE BRACING	D8.10 - D8.22
IN LINE DUCT DEVICE - KIT INSTALLATION DETAILS - SOLID (RIGID) BRACING	D9.10 - D9.13
IN LINE DUCT DEVICE - KIT INSTALLATION DETAILS - CABLE BRACING	D10.10 - D10.13
SUSPENDED EQUIPMENT - KIT INSTALLATION DETAILS - SOLID (RIGID) BRACING	D11.10 - D11.13
SUSPENDED EQUIPMENT - KIT INSTALLATION DETAILS - CABLE BRACING (STANDARD)	D12.10 - D12.13
SUSPENDED EQUIPMENT - KIT INSTALLATION DETAILS - CABLE BRACING (X - PATTERN)	D13.10 - D13.13
RECTANGULAR DUCT - KIT INSTALLATION DETAILS - WALL ATTACHMENT	D14.10 - D14.32
HANGER - STRUCTURE ATTACHMENT DETAILS	M0.00 - M9.10
HANGER INSTALLATION DETAILS WITH ROD STIFFENER	M10.10 - M10.12
BRACE - STRUCTURE ATTACHMENT DETAILS	N0.00 - N7.10
SUPPLEMENTAL STEEL DETAILS	P1.10 - P1.12
TRAPEZE SELECTION TABLES	T1.0 - T1.7
COMPONENTS	X1.0 - X9.0.9

HCAI
OPM-0043
REVIEWED FOR CODE COMPLIANCE
BY: William Staehlin
DATE: 01/23/2023
CALIFORNIA BUILDING CODE

MASON WEST
1601 E. Miraloma Ave. Placentia, CA 92870
TEL (714) 630 - 0701, www.masonwest.com

Jiefu "Jeff" Zhang, SE
California SE No. S5270

PAGE
TOC-D

TABLE OF CONTENTS
ELECTRICAL RACEWAYS

	PAGE(S)
DESIGN GENERAL NOTES	A0.1 - A0.7
GENERAL NOTES	A20.0 - A20.6
DESIGN PROCEDURE	A21.0 - A21.6
LAYOUT OF SEISMIC BRACING	A22.0 - A22.7
12" RULE FOR SUSPENDED RACEWAYS	A23.0
TRANSVERSE BRACE ALLOWABLE BRACE ANGLE VARIATION IN PLAN	A24.0 - A24.2
ALTERNATE ARRANGEMENT OF SEISMIC BRACES	A25.0 - A25.2
ATTACHMENT OPTIONS FOR CONDUITS TO TRAPEZE	A26.0
INSTALLATION OPTION - OFF STRUT HANGER	A27.0 - A27.11
INSTALLATION OPTION - PIPE CLAMP	A28.0 - A28.1
SEISMIC BRACE TABLES	B1.12 - B1.20, B5.0 - B5.8
INDIVIDUALLY HUNG CONDUIT - KIT INSTALLATION DETAILS - SOLID (RIGID) BRACING	C1.10 - C1.35
INDIVIDUALLY HUNG CONDUIT - KIT INSTALLATION DETAILS - CABLE BRACING	C2.10 - C2.32
INDIVIDUALLY HUNG CONDUIT - KIT INSTALLATION DETAILS - WALL ATTACHMENT	C3.10 - C3.30
CONDUITS ON TRAPEZE - KIT INSTALLATION DETAILS - SOLID (RIGID) BRACING	F1.10 - F1.75
CONDUITS ON TRAPEZE - KIT INSTALLATION DETAILS - CABLE BRACING (STANDARD)	F2.10 - F2.42
CONDUITS ON TRAPEZE - KIT INSTALLATION DETAILS - CABLE BRACING (X - PATTERN)	F3.10 - F3.13
CONDUITS ON TRAPEZE - KIT INSTALLATION DETAILS - WALL ATTACHMENT	F4.10 - F4.32
CABLE TRAYS ON TRAPEZE - KIT INSTALLATION DETAILS - SOLID (RIGID) BRACING	E1.10 - E1.32
CABLE TRAYS ON TRAPEZE - KIT INSTALLATION DETAILS - CABLE BRACING (STANDARD)	E2.10 - E2.32
CABLE TRAYS ON TRAPEZE - KIT INSTALLATION DETAILS - CABLE BRACING (X - PATTERN)	E3.10 - E3.12
CABLE TRAYS ON TRAPEZE - KIT INSTALLATION DETAILS - WALL ATTACHMENT	E4.10 - E4.32
HANGER - STRUCTURE ATTACHMENT DETAILS	M0.00 - M9.10
HANGER INSTALLATION DETAILS WITH ROD STIFFENER	M10.10 - M10.12
BRACE - STRUCTURE ATTACHMENT DETAILS	N0.00 - N7.10
SUPPLEMENTAL STEEL DETAILS	P1.10 - P1.12
CONDUIT BRACE SPACING TABLES	S2.1 - S2.2
PIPE CLAMP SPACING TABLES	S4.0 - S4.2
TRAPEZE SELECTION TABLES	T2.0 - T3.7
COMPONENTS	X1.0 - X9.0.9

REVIEWED FOR CODE COMPLIANCE
OPM-0043
BY: William Staehlin
DATE: 01/23/2023
CALIFORNIA BUILDING CODE 2022

MASON WEST
1601 E. Miraloma Ave. Placentia, CA 92870
TEL (714) 630 - 0701, www.masonwest.com

Jiefu "Jeff" Zhang, SE
California SE No. S5270

PAGE
TOC-E

DESIGN GENERAL NOTES

Conditions of Use:
This OSHPD Pre-approval of Manufacturer's Certification (OPM) is based on the 2013 CBC. The Demand (design forces) for use with the OPM shall be based on the 2013 CBC.

This OPM is also applicable to the 2016 CBC without modification and the 2019/2022 CBC with modifications indicated on pages A1.5a, A10.5a, A10.6a, A20.5a and A20.6a in lieu of pages A1.5, A10.5, A10.6, A20.5 and A20.6, respectively. Note to be added to note 1 on sheets A1.0, A10.0, A20.0, and X9.0.

Maximum allowable S_{DS} for this OPM is limited to 2.5g.

These drawings are prepared for Mason West.

This pre-approval is for the seismic bracing of interior pipes, ducts, conduits and cable trays. It does not address other loads such as, but not limited to, those generated by thermal growth, pressure, fluid dynamics, pipe rupture, or movements of equipment to which brace components are attached. It does not address components that cross seismic separations of buildings. Nor does it address components (other than pipe risers) attached to portions of the structure or equipment that will experience relative seismic displacement. The range of component sizes and material included in the pre-approval are as follows:

a) Pipes:
   i. Steel; Sch. 10 and larger - Sizes up to 30"
   ii. Copper; Type L and K - Sizes up to 6"
   iii. Cast Iron Pipe - Sizes 2" - 12"
b) Ducts:
   i. Galvanized Rectangular Duct; all sizes up to 120" wide
   ii. Galvanized Round Duct; 3" to 84"
c) Conduits/Cable Trays:
   i. RMC Conduit - Sizes up to 6"
   ii. IMC Conduit - Sizes up to 4"
   iii. EMT Conduit - Sizes up to 4"
   iv. Cable trays -- ladder type, all sizes
d) Fire Protection (or Sprinkler) Pipes:
   i. Steel; Sch. 10 (Sizes up to 8"), Sch. 40 (Sizes up to 12")

The substrates included in this pre-approval are as follows:
a) Concrete
b) Metal Decking
c) Steel
d) Wood

REVIEWED FOR CODE COMPLIANCE
HCAi
OPM 0043
BY: William Staehlin
DATE: 01/23/2023
CALIFORNIA BUILDING CODE, 2022

Registered Design Professional Responsibility:
The Registered Design Professional (RDP) is the engineer executing the design of the seismic bracing system. The RDP delivers the complete seismic bracing design to the Structural Engineer of Record (SEOR) for the OSHPD project. It is the responsibility of the Registered Design Professional in responsible charge to:

1) Verify that the nonstructural components or system is seismically qualified in accordance with the CBC, where necessary.

2) Verify that the proper Mason West brace system is selected to meet the seismic requirements of this OPM.

MASON WEST
1601 E. Miraloma Ave. Placentia, CA 92870
TEL (714) 630 - 0701, www.masonwest.com

Jiefu "Jeff" Zhang, SE
California SE No. S5270

PAGE
A0.1

DESIGN GENERAL NOTES

3) Verify that the structure to which the Mason West seismic brace is anchored meets the requirements of the applicable anchorage ICC ESR Report.

4) Verify that anchor edge distance and spacing meets the requirements of the applicable ICC ESR.

5) Verify that the installation is in conformance with the 2013 CBC and with details shown in this OPM. Testing of post installed anchors shall also be performed in accordance with 2013 CBC Section 1913A.7 or with 2016/2019/2022 CBC Section 1910A.5.

Layout Drawings:

A) Layout drawings of the supports, attachments, and bracing systems in accordance with the pre-approval shall be submitted to the Structural Engineer Of Record (SEOR)/Registered Design Professional (RDP) in responsible charge of the project for review to verify that the details are in conformance with the code requirements. The layout drawings shall, as a minimum, satisfy the requirements of ASCE 7 Section 13.6 (including Supplements # 1 & # 2) as modified by CBC 2013/2016 Section 1616A or CBC 2019/2022 Section 1617A.

1. The SEOR shall verify that the supporting structure is adequate for the forces imposed on it by the supports, attachments and braces installed in accordance with the pre-approval in addition to all other loads.

2. The SEOR shall forward the supports, attachments, and bracing drawings (including construction documents for supplementary framing, where required) to the RDP in responsible charge with a notation indicating that the drawings have been reviewed and are in general conformance with the pre-approval and the design of the project.

3. A review stamp shall be permitted to be used, by the SEOR, to indicate compliance with this requirement.

4. The Registered Design Professional (RDP), other than SEOR, may provide the review stamp for small projects at the discretion of OSHPD.

B) The SEOR shall design any supplementary framing that is needed to resist the loads, maintain stability and/or is required for installation of pre-approved system.
- The supplementary framing shall be submitted to OSHPD as part of original Construction Documents or as a Deferred Submittal Item; Deferred Submittal Items shall be listed on the cover page of the original Construction Documents.

C) The layout drawings, with the review stamp, shall be submitted to OSHPD, as part of original CDs or as Deferred Submittal Items in accordance with CAC Section 7-126 and CBC Section 107.3.4.1 for verification that:

1) Structure supporting the distribution system has adequate capacity;
2) Seismic design forces (F_P) are in accordance with the CBC; and
3) Verify that submittal is within the scope of OSHPD Preapproval of Manufacturer's Certification (OPM):
   a. Size of distribution system components
   b. Spacing of bracing and flex. joints, and
   c. Substrate for attachments

REVIEWED FOR CODE COMPLIANCE
HCAi
OPM-0043
BY: William Staehlin
DATE: 01/23/2023
FILED WITH BUILDING CODE, 2022

MASON WEST
1601 E. Miraloma Ave. Placentia, CA 92870
TEL (714) 630 - 0701, www.masonwest.com

Jiefu "Jeff" Zhang, SE
California SE No. S5270

PAGE
A0.2

DESIGN GENERAL NOTES

D. The layout drawings, with the review stamp, shall be kept on the jobsite to be used for installation of the support and bracing.
   - The approved agency/inspector of record shall provide inspection in accordance with CBC Sections 1704 or 1704A/CAC Section 7-145.
   - OSHPD field staff will review/inspect the installation in accordance with CAC Section 7-147.

E. A copy of the bracing system(s) installation guide/OPM manual shall be on the jobsite prior to starting the installation of hangers and/or braces.
   - The approved agency/inspector shall maintain an approved copy of the OPM (obtained from the OSHPD website) in accordance with CAC Section 7-145 Item #4.

F. Components of two or more pre-approved bracing systems shall not be mixed.
   - Only one pre-approved bracing system may be used for a run of pipe, duct, or raceway.
   - Any substitution of a component of an OPM system shall require OSHPD review and approval.

Expansion Anchors:

1) All post installed concrete anchors shall meet requirements of 2013/2016 CBC Section 1616A.1.19 or 2019/2022 CBC Section 1617A.1.19, and be installed per their ICC ESR report.
2) The special inspector shall be on the jobsite continuously during anchor installation, unless otherwise noted in the ICC ESR.
3) Expansion anchors to be tested per the requirements specified in 2013 CBC Section 1913A.7 or 2016/2019/2022 CBC Section 1910A.5.

Definitions:

1) Snug tight - Tightness required to bring the connected plies into firm contact, and that the nuts could not be removed without the use of a wrench.

REVIEWED FOR CODE COMPLIANCE
CALIFORNIA BUILDING CODE, 2022
HCAI
OPM-0043
BY: William Staehlin
DATE: 01/23/2023

MASON WEST
1601 E. Miraloma Ave. Placentia, CA 92870
TEL (714) 630 - 0701, www.masonwest.com

Jiefu "Jeff" Zhang, SE
California SE No. S5270

PAGE
A0.3

EXPANSION ANCHOR TEST VALUES

	Anchor Size	Concrete Slab Test Values	Torque Test Values
		(lbs)	(ft-lbs)
HILTI KB-TZ2	3/8"Ø x 2" MIN. EFF. EMBED.	2220	30
	1/2"Ø x 2" MIN. EFF. EMBED.	2220	50
	1/2"Ø x 3 1/4" MIN. EFF. EMBED.	3720	50
	5/8"Ø x 3 1/4" MIN. EFF. EMBED.	4600	40
	5/8"Ø x 4" MIN. EFF. EMBED.	5090	40
	3/4"Ø x 3 3/4" MIN. EFF. EMBED.	5700	110
	3/4"Ø x 4 3/4" MIN. EFF. EMBED.	6500	110
POWERS POWER-STUD+ SD1	3/8"Ø x 2" MIN. EFF. EMBED.	1520	20
	1/2"Ø x 3 1/4" MIN. EFF. EMBED.	1870	40
	5/8"Ø x 2 3/4" MIN. EFF. EMBED.	2900	80
POWERS POWER-STUD+ SD2	3/8"Ø x 2" MIN. EFF. EMBED.	1620	20
	1/2"Ø x 2" MIN. EFF. EMBED.	1800	40
	1/2"Ø x 3 1/4" MIN. EFF. EMBED.	3270	40
	5/8"Ø x 3 1/4" MIN. EFF. EMBED.	3720	60
	5/8"Ø x 4 1/4" MIN. EFF. EMBED.	5570	60
	3/4"Ø x 3 3/4" MIN. EFF. EMBED.	4620	110
MASON IND. N.Y. SAS(E)	3/8"Ø x 2 1/2" MIN. EFF. EMBED.	2070	30
	1/2"Ø x 2 1/4" MIN. EFF. EMBED.	2150	60
	1/2"Ø x 3 3/8" MIN. EFF. EMBED.	2800	60
	5/8"Ø x 4 1/2" MIN. EFF. EMBED.	5150	90
	3/4"Ø x 5" MIN. EFF. EMBED.	6350	150

	Anchor Size	CMU Wall Test Values	Torque Test Values
		(lb)	(ft-lbs)
HILTI KB-TZ2	1/2"Ø x 3 1/4" MIN. EFF. EMBED.	1280	25

REVIEWED FOR CODE COMPLIANCE
OPM-0043
BY: William Staehlin
DATE: 01/23/2023
CALIFORNIA RESIDENTIAL CODE, 2022

NOTES:

1. Anchor diameter refers to the thread size.
2. Apply proof test loads to anchors without removing the nut if possible. If not, remove nut and install a threaded coupler to the same tightness of the original nut using a torque wrench and apply load.
3. Reaction loads from test fixtures may be applied close to the anchor being tested, provided the anchor is not restrained from withdrawing by the fixture(s).
4. Test equipment is to be calibrated by an approved testing laboratory in accordance with standard recognized procedures.
5. Testing shall be done in the presence of the special inspector and a report of the test results shall be submitted to the enforcement agency.
6. The following criteria apply for the acceptance of installed anchors:
   HYDRAULIC RAM METHOD: The anchor should have no observable movement at the applicable test load. A practical way to determine observable movement is that the washer under the nut becomes loose.
   TORQUE WRENCH METHOD: The applicable test torque must be reached within 1/2 turn of the nut.
7. Testing shall occur 24 hours minimum after installation of the subject anchors.
8. Refer to appropriate M1 and N1 pages for appropriate slab installation parameters or M2 and N2 pages for appropriate soffit of concrete over metal deck installation.

MASON WEST
1601 E. Miraloma Ave. Placentia, CA 92870
TEL (714) 630 - 0701, www.masonwest.com

Jiefu "Jeff" Zhang, SE
California SE No. S5270

PAGE
A0.4

EXPANSION ANCHOR TEST VALUES

	Anchor Size	Soffit of Concrete over Deck Test Values (lbs)	Torque Test Values (ft-lbs)
HILTI KB-TZ2	3/8"Ø x 2 1/2" MIN. EFF. EMBED.	1670	30
	1/2"Ø x 2 1/2" MIN. EFF. EMBED.	2240	50
	1/2"Ø x 3 1/4" MIN. EFF. EMBED.	2290	50
	5/8"Ø x 2 3/4" MIN. EFF. EMBED.	2690	40
	5/8"Ø x 4" MIN. EFF. EMBED.	3000	40
	3/4"Ø x 3 3/4" MIN. EFF. EMBED.	2550	110
HILTI KB-TZ2 (B DECK)	3/8"Ø x 2" MIN. EFF. EMBED.	1450	30
	1/2"Ø x 2" MIN. EFF. EMBED.	1020	50
	1/2"Ø x 3 1/4" MIN. EFF. EMBED.	1290	50
	5/8"Ø x 2 3/4" MIN. EFF. EMBED.	1800	110
POWERS POWER-STUD+ SD1	3/8"Ø x 2" MIN. EFF. EMBED.	940	20
	1/2"Ø x 2" MIN. EFF. EMBED.	1640	40
	5/8"Ø x 2 3/4" MIN. EFF. EMBED.	1350	80
	3/4"Ø x 3 1/8" MIN. EFF. EMBED.	1940	110
POWERS POWER-STUD+ SD2	3/8"Ø x 2" MIN. EFF. EMBED.	990	20
	1/2"Ø x 2" MIN. EFF. EMBED.	1000	40
	1/2"Ø x 3 1/4" MIN. EFF. EMBED.	1770	40
	5/8"Ø x 3 1/4" MIN. EFF. EMBED.	2250	60
	5/8"Ø x 4 1/4" MIN. EFF. EMBED.	3570	60
	3/4"Ø x 3 3/4" MIN. EFF. EMBED.	2370	110
MASON IND. N.Y. SAS(E)	3/8"Ø x 1 5/8" MIN. EFF. EMBED.	720	30
	3/8"Ø x 3" MIN. EFF. EMBED.	1790	30
	1/2"Ø x 2 1/4" MIN. EFF. EMBED.	1400	60
	1/2"Ø x 4" MIN. EFF. EMBED.	1870	60
	5/8"Ø x 2 3/4" MIN. EFF. EMBED.	1790	90
	5/8"Ø x 5" MIN. EFF. EMBED.	3400	90
	3/4"Ø x 3 3/8" MIN. EFF. EMBED.	1920	150

NOTE: See sheet A0.4 for notes regarding anchor testing.

REVIEWED FOR CODE COMPLIANCE
OPM-0043
By: William Staehlin
Date: 01/23/2023
CALIFORNIA BUILDING CODE, 2022

MASON WEST
1601 E. Miraloma Ave. Placentia, CA 92870
TEL (714) 630 - 0701, www.masonwest.com

Jiefu "Jeff" Zhang, SE
California SE No. S5270

PAGE
A0.5

SCREW ANCHOR TEST VALUES

	Anchor Size	Concrete Slab Test Values (lbs)
POWERS HANGERMATE+ SCREW-BOLT+	¼"Ø x 2" MIN. EFF. EMBED.	870
	⅜"Ø x 2½" MIN. EFF. EMBED.	2070
	½"Ø x 2¼" MIN. EFF. EMBED.	1890
	½"Ø x 3¼" MIN. EFF. EMBED.	3520
	⅝"Ø x 2⅞" MIN. EFF. EMBED.	1840
	⅝"Ø x 3¾" MIN. EFF. EMBED.	2520
	¾"Ø x 3⅛" MIN. EFF. EMBED.	3050
MASON IND. N.Y. SAST	⅜"Ø x 1⅞" MIN. EFF. EMBED.	920
	½"Ø x 2⅜" MIN. EFF. EMBED.	2290
	½"Ø x 3" MIN. EFF. EMBED.	3290
	⅝"Ø x 3" MIN. EFF. EMBED.	2270
	⅝"Ø x 4¼" MIN. EFF. EMBED.	4170
	¾"Ø x 4¼" MIN. EFF. EMBED.	4540
HILTI KH-EZ KH-EZ-I	¼"Ø x 2" MIN. EFF. EMBED.	870
	⅜"Ø x 1⅛" MIN. EFF. EMBED.	550
	⅜"Ø x 1⅞" MIN. EFF. EMBED.	1620
	½"Ø x 2¼" MIN. EFF. EMBED.	2020
	⅝"Ø x 2½" MIN. EFF. EMBED.	2350
	⅝"Ø x 3⅞" MIN. EFF. EMBED.	4850
	¾"Ø x 3" MIN. EFF. EMBED.	3170

NOTES:

1. Anchor diameter refers to the thread size.
2. Reaction loads from test fixtures may be applied close to the anchor being tested, provided the anchor is not restrained from withdrawing by the fixture(s).
3. Test equipment is to be calibrated by an approved testing laboratory in accordance with standard recognized procedures.
4. Testing shall be done in the presence of the special inspector and a report of the test results shall be submitted to the enforcement agency.
5. The following criteria apply for the acceptance of installed anchors:
   HYDRAULIC RAM METHOD: The anchor should have no observable movement at the applicable test load. A practical way to determine observable movement is that the washer under the nut becomes loose.
6. Testing shall occur 24 hours minimum after installation of the subject anchors.
7. Refer to appropriate M1 and N1 pages for appropriate slab installation parameters.

REVIEWED FOR CODE COMPLIANCE
HCAI
OPM-0043
BY: William Staehlin
DATE: 01/23/2023
CALIFORNIA BUILDING CODE, 2022

MASON WEST
1601 E. Miraloma Ave. Placentia, CA 92870
TEL (714) 630 - 0701, www.masonwest.com

Jiefu "Jeff" Zhang, SE
California SE No. S5270

PAGE
A0.6

SCREW ANCHOR TEST VALUES

	Anchor Size	Soffit of Concrete over Deck Test Values (lbs)
POWERS HANGERMATE+ SCREW-BOLT+	¼"Ø x 2" MIN. EFF. EMBED.	640
	⅜"Ø x 2½" MIN. EFF. EMBED.	1390
	½"Ø x 1¾" MIN. EFF. EMBED.	870
	½"Ø x 2¼" MIN. EFF. EMBED.	1590
	½"Ø x 3¼" MIN. EFF. EMBED.	2750
	⅝"Ø x 2⅞" MIN. EFF. EMBED.	1190
	⅝"Ø x 3¾" MIN. EFF. EMBED.	1650
	¾"Ø x 3⅛" MIN. EFF. EMBED.	2340
MASON IND. N.Y. SAST	⅜"Ø x 1¼" MIN. EFF. EMBED.	340
	⅜"Ø x 1⅞" MIN. EFF. EMBED.	600
	½"Ø x 1⅜" MIN. EFF. EMBED.	1170
	½"Ø x 1⅞" MIN. EFF. EMBED.	600
	½"Ø x 2⅝" MIN. EFF. EMBED.	1400
HILTI KH-EZ KH-EZ-I	¼"Ø x 1⅛" MIN. EFF. EMBED.	500
	¼"Ø x 2" MIN. EFF. EMBED.	670
	⅜"Ø x 1⅛" MIN. EFF. EMBED.	820
	⅜"Ø x 1⅞" MIN. EFF. EMBED.	1420
	⅜"Ø x 2½" MIN. EFF. EMBED.	1900
	½"Ø x 2¼" MIN. EFF. EMBED.	1320
	½"Ø x 3¼" MIN. EFF. EMBED.	2300
	⅝"Ø x 2½" MIN. EFF. EMBED.	1800
	⅝"Ø x 3⅞" MIN. EFF. EMBED.	4090
	¾"Ø x 3" MIN. EFF. EMBED.	1800

NOTES:

1. Anchor diameter refers to the thread size.
2. Reaction loads from test fixtures may be applied close to the anchor being tested, provided the anchor is not restrained from withdrawing by the fixture(s).
3. Test equipment is to be calibrated by an approved testing laboratory in accordance with standard recognized procedures.
4. Testing shall be done in the presence of the special inspector and a report of the test results shall be submitted to the enforcement agency.
5. The following criteria apply for the acceptance of installed anchors:
   HYDRAULIC RAM METHOD: The anchor should have no observable movement at the applicable test load. A practical way to determine observable movement is that the washer under the nut becomes loose.
6. Testing shall occur 24 hours minimum after installation of the subject anchors.
7. Refer to appropriate M2 and N2 pages for appropriate soffit of concrete over metal deck installation parameters.

REVIEWED FOR CODE COMPLIANCE
OPM-0043
By William Staehlin
DATE: 01/23/2023
CALIFORNIA BUILDING CODE 2022

MASON WEST
1601 E. Miraloma Ave. Placentia, CA 92870
TEL (714) 630 - 0701, www.masonwest.com

Jiefu "Jeff" Zhang, SE
California SE No. S5270

DUCTWORK GENERAL NOTES

1) This OSHPD Preapproval of Manufacturer's Certification (OPM) is based on the 2013 CBC. The demand (design forces) for use with this OPM shall be based on the 2013 CBC.

2) Per ASCE 7-10, Section 13.3.1, restraints and their anchorages must be capable of restraining horizontal, F_P , and vertical, F_{PV}, seismic accelerations as follows.

$$F_P = (0.7)\frac{0.4a_P S_{DS} W_P}{R_P/I_P}\left(1+2\frac{z}{h}\right) \quad \text{(ASD)} \quad \text{(ASCE 7-10 EQ 13.3-1)}$$

is not required to be taken greater than $(0.7)1.6S_{DS}I_PW_P$ (ASD) (ASCE 7-10 EQ 13.3-2)

shall not be taken less than $(0.7)0.3S_{DS}I_PW_P$ (ASD) (ASCE 7-10 EQ 13.3-3)

$$F_{PV} = (0.7)0.2S_{DS}W_P \quad \text{(ASD)}$$

Where:

S_{DS} = short period spectral acceleration - up to 2.5g. Values of S_{DS} indicated in the general notes of the structural drawing take precedence over those calculated per ASCE 7-10, 11.4.4.

W_P = component (or tributary length of duct) operating weight (lbs/ft).

I_P = component importance factor

= 1.5 for OSHPD 1 & 4 in accordance with the 2013 CBC, Section 1616A.1.17 and for OSHPD 2 & 3, where required by ASCE 7, Section 13.1.3.

= 1.0 for OSHPD 2 & 3, when permitted by ASCE 7, Section 13.1.3.

a_P = component amplification factor (Ref. ASCE 7-10, Table 13.6-1)

= 2.5 for airside HVAC equipment and ductwork.

R_P = component response modification factor (Ref. ASCE 7-10, Table 13.6-1)

= 3.0 for ductwork, including in-line devices, constructed of low-deformability materials, such as cast iron, glass and non-ductile plastics.

= 6.0 for airside HVAC equipment and ductwork, including in-line duct devices, constructed of high- or limited deformability materials, with joints made by means other than welding or brazing.

= 9.0 for ductwork, including in-line duct devices, constructed of high-deformability materials, with joints made by welding or brazing.

Note: Per ASCE 7-10, Section 13.4.1, do not use an Rp factor greater than 6.0 when calculating Fp and Fpv for design of the attachment.

z = height in structure of point of connection of component with respect to base (ft).

h = average roof height of structure with respect to base (ft).

3) For systems anchored to concrete only, the anchorage to concrete overstrength factor, Ωo, must be applied. Sections M & N provide alternate allowable load tables with and without Ωo applied. For cases where Ωo is applicable, use the appropriate tables in Sections M & N so it is not necessary to apply this factor when calculating F_P and F_{PV}. Ωo is not applicable if a yielding steel element is considered in the load path. Refer to ACI 318-11 Appendix D, Section D.3.3.4.3 or ACI 318-14 Chapter 17, Section 17.2.3.4.3 for a list of qualifying conditions. The Registered Design Professional (RDP) shall use the allowable vertical loads under overstrength factor Ωo = 2.0 unless the vertical support complies with one of the qualifying conditions.

4) A complete description on how to use these guidelines is provided in Section A2. It includes specific examples for both using the enclosed details/charts and a layout procedure for bracing of suspended duct systems.

MASON WEST
1601 E. Miraloma Ave. Placentia, CA 92870
TEL (714) 630 - 0701, www.masonwest.com

Jiefu "Jeff" Zhang, SE
California SE No. S5270

PAGE
A1.0

DUCTWORK GENERAL NOTES (continued)

Notes on Seismic Bracing:

1) These guidelines list installations which may be exempt from seismic bracing under the CBC. The RDP shall be responsible for determining whether to allow these exceptions, subject to approval by the SEOR and OSHPD.

2) Each straight run of a duct system requires a minimum of two transverse braces (perpendicular to the run). (Option: A longitudinal brace located at any point of the straight run on the opposite side of an elbow or tee may act as a transverse brace. Refer to the layout examples detailed in Section A3.)

3) Each straight run of a duct system requires a minimum of one longitudinal brace (parallel to the run). (Option: A transverse brace on the opposite side of an elbow or tee can act as a longitudinal brace provided it is located within 2 feet of the elbow or tee. Refer to the layout examples detailed in Section A3.)

   Note: For items 2) and 3) above, a short run of ductwork may not require seismic bracing if its tributary seismic load transfers to an adjacent run of ductwork that is sufficiently seismically braced that can accept the additional seismic loads, when approved by OSHPD for a specific project.

4) Transverse and longitudinal braces that project to the overhead structure shall be installed between 30 and 60 degrees from horizontal. Braces that project to an adjacent wall may be installed directly horizontal (zero degrees) or between 30 and 60 degrees from the horizontal. However, this is limited depending on the capacity of the brace and method of connection to structure.

5) Seismic bracing may consist of solid bracing designed to accept loads in tension and compression or cable bracing designed to accept tension loads only. Each brace method requires a vertical hanger within close proximity of their connection to the distribution system. (Refer to the specific detail for limitations). The vertical hanger may or may not require stiffening or additional anchorage to the structure (Refer to Notes on Supports, Page A1.2).

6) Avoid mixing solid bracing with cable bracing in the same direction on any run of a distribution system unless specifically engineered and approved by the enforcement agency.

7) Avoid bracing a system to two different parts of a building which may act differently in response to an earthquake (i.e. separated by a seismic joint) . In cases where this may occur, the duct run must be designed to accept the seismic relative displacement.

8) Systems with significant thermal motion shall be designed on a case by case basis by a professional engineer familiar with both seismic loading and thermal expansion.

9) Seismic brace details for suspended duct systems include maximum allowable horizontal seismic load, F_P, at different brace angles. The details include Mason Industries N.Y. seismic brace component size, aircraft cable or solid brace member size, acceptable hanger rod diameter(s) and hanger rod stiffening requirements. Trapeze member sizes and connection to structure for both hanger rods and seismic braces are tabulated and/or detailed in Sections B, T, M, and N, respectively.

10) Seismic brace requirements for seismic accelerations ranging from 0.25 to 1.0g (ASD) are tabulated in Sections B2, B3 and B4. Each schedule is designed to a specific seismic acceleration and provides maximum transverse, longitudinal and all-directional brace spacings based on operating weight per linear foot of the duct system. In addition, the schedules provide hanger rod and seismic brace connection options that meet the same criteria.

REVIEWED FOR CODE COMPLIANCE
HCAi
OPM-0043
BY: William Staehlin
DATE: 01/23/2023
CALIFORNIA BUILDING CODE, 2022

MASON WEST
1601 E. Miraloma Ave. Placentia, CA 92870
TEL (714) 630 - 0701, www.masonwest.com

Jiefu "Jeff" Zhang, SE
California SE No. S5270

PAGE
A1.1

DUCTWORK GENERAL NOTES (continued)

11) Multi-layer duct systems that share support rods must be braced independently from one another or as specifically engineered by the RDP. Layers supporting loads ≤ 10 lbs/ft need not be braced, provided that the load is accounted for in the nearest braced layer. Each section of threaded rod between trapezes and/or the building structure is subject to vertical stiffening requirements.

12) Vertical drops from suspended duct systems to equipment (or flexible connectors where applicable) may be braced using the transverse and longitudinal braces in this manual. Note: Do not exceed ½ of the maximum brace spacing as measured from the seismic brace to the equipment or flexible connector when bracing vertical drops. (Refer to Layout of Seismic Braces, Section A3). If the transverse or longitudinal brace cannot accept the full vertical drop, a seismic floor support designed for the applicable loads is required. Design of this support shall account for seismic relative displacement between floors and may require a flexible connection between the floor support and the first seismic brace location above.

13) Any system which crosses a building separation or seismic joint must be designed to accommodate the seismic relative displacement per ASCE 7, Section 13.3.2, 13.3.2.1, and 13.3.2.2, or as specified by the engineer of record for approval by the enforcement agency.

Notes on Supports:

1) Where the seismic brace system incorporates the use of a threaded vertical hanger rod designed to carry gravity loads only, additional anchorage and/or stiffening may be required as detailed. General support of suspended duct systems and equipment to carry gravity loads shall be determined by the engineer of record and/or mechanical code requirements. However, hanger rod connection details in this manual may be used as a guide for these supports. ASTM A307 threaded rods may be used in lieu of ASTM A36 threaded rods as called out in this manual. The use of "C-Clamps" designed to attach threaded rod to one side of a steel beam flange shall not be used unless they are provided with a restraining strap or hook to the opposite beam flange equivalent to those specified in NFPA 13, Section 9.3.7 and approved by OSHPD.

2) Support rod capacity and its anchorage to the structure is an important part of a solid bracing system. Solid braces shall not be attached to existing systems or support rods designed for gravity loads unless they are checked for increased loads.

3) Threaded vertical hanger rods where seismic sway bracing is attached may require stiffening if the length of the rod exceeds the maximum unbraced rod length indicated on the kit installation detail in Section D. However, if the calculated compression on the rod due to combined gravity, the vertical brace component of the bracing system as a result of Fp, and Fpv loads is less than or equal to zero, no rod stiffening is required, regardless of rod length. A vertical rod stiffener using a 1⅝"x1⅝"x12ga strut channel or angle cut to the appropriate length and attached to the threaded rod with a minimum of two Mason Ind. N.Y. Type UCC or SRC clamps is required, as detailed in Section D. The contractor may substitute a break-off bolt set to a minimum of 10 ft-lbs (Ref. X3.0). Rod stiffening strut may be solid, slotted or punched. Ref. X7.0 and X7.1 for strut member data.

4) Trapeze supports shall consist of 12 gauge single or double channel strut, steel angles or tube steel as tabulated in Sections B and T. For gravity-only trapeze supports and trapeze supports where transverse seismic braces are installed, the acceptable size of the trapeze member is provided in the same sections. For trapeze supports where longitudinal seismic braces are to be installed, the acceptable size of the trapeze member is also provided. Trapeze members may be provided with round holes sized for hanger rods. Ref. X7.0 and X7.1 for strut member data. In all cases, for analysis purposes, the following information is required: a) seismic 'g' coefficient, b) duct weight per foot and c) maximum span between threaded rod supports. The trapezes shall be supported by threaded rods, with nuts and washers as detailed in Section D, with rod stiffeners as required per Note 3.

MASON WEST
1601 E. Miraloma Ave. Placentia, CA 92870
TEL (714) 630 - 0701, www.masonwest.com

Jiefu "Jeff" Zhang, SE
California SE No. S5270

PAGE
A1.2

DUCTWORK GENERAL NOTES (continued)

5) Concrete overstrength factor, Ω_0, is not required for hanger supports designed for gravity only or hanger supports at seismic cable brace locations where seismic forces do not exceed 20% of the total forces.

Notes on Seismic Cable Bracing:

1) Cables shall be prestretched galvanized 7x19 strand core aircraft cable, with no limit to their installed length. Cables meet the following specifications: MIL-DTL-83420M with Amendment 2, Type 1 non-jacketed cable.

2) Cables shall be installed slightly slack, so as not to support gravity loads.

3) Cable shall connect the braced item to a building structural element. Cable shall have a bracket at each end to make the connections. The cable assembly, with connection brackets, shall be Mason Ind. N.Y. SCB or SCBH, refer to pages X1.0 & X1.1. Cable is held to end brackets with one or two bolts. Cable bolts shall be tightened to the torque values stated in the details or, in the case where break off nuts are provided, until the nut breaks off. Break off nuts are as manufactured by Mason West, Inc. (Refer to Page X4.0).

4) The Mason Ind. N.Y. SCBH component can be used for connection directly to the threaded vertical hanger rod used for supporting system gravity loads as detailed in Section D.

5) The SCB bracket and cable (Ref. X1.0), SCBH bracket and cable (Ref. X1.1), and UCC rod stiffener clamp (Ref. X3.0) are manufactured by Mason Ind. N.Y. and are included (with accompanying hardware) in the kit options provided in Section D.

Notes on Seismic Solid (Rigid) Bracing:

1) Solid bracing members shall be 12 gauge channel strut or steel angle. Strut members may be solid, slotted or punched. The details in Section D indicate the minimum solid brace size based on a maximum solid brace length. The charts on pages X2.0 and X2.1 tabulate different solid brace member sizes for maximum installed lengths of 5'-0", 9'-6" or 14'-6". Ref. X7.0 and X7.1 for strut member data.

2) Solid brace members shall be connected to both the distribution system and the structure using the seismic solid brace components (Mason Ind. N.Y. Type SSBS or SHB. Refer to pages X2.0 or X2.1, respectively).

3) The attachment between the solid brace component and the 12 gauge channel strut shall consist of (1) or (2) 1/2" bolt and strut nut connections torqued to 50 ft-lbs or, in the case where break off nuts are provided, until the nut breaks off. Refer to Section D to determine the quantity of bolt/strut nut connections required. Break off nuts are as manufactured by Mason West, Inc. (Refer to Page X4.0).

4) The SSBS bracket (Ref. X2.0), SHB bracket (Ref. X2.1), and UCC rod stiffener clamp (Ref. X3.0) are manufactured by Mason Ind. N.Y. and are included in the kit options (with accompanying hardware) provided in Section D.

REVIEWED FOR CODE COMPLIANCE
OPM-0043
BY: William Staehlin
DATE: 1/23/2023
ALL OTHER BUILDING CODES 2022

MASON WEST
1601 E. Miraloma Ave. Placentia, CA 92870
TEL (714) 630 - 0701, www.masonwest.com

Jiefu "Jeff" Zhang, SE
California SE No. S5270

PAGE
A1.3

DUCTWORK GENERAL NOTES (continued)

Notes on Seismic Brace Attachment to Building Structure:

1) Attachment methods and hardware (connectors) used for seismic bracing attachment to the building structural element is the critical factor in the design of seismic sway-bracing. Lightweight structures may limit the maximum spacing between seismic braces. The structural engineer of record shall determine the maximum allowable seismic loads that may be imposed on the building structure.

2) Attachment to different types of structures are addressed in these guidelines. Attachment types include reinforced normal or sand lightweight concrete (flat slabs, slabs poured in steel decking, walls or columns), fully grouted reinforced concrete masonry, hollow steel decking, steel framing, timber framing, and metal stud wall framing. Attachments may be made with pre- or post-installed concrete anchors, machine bolts, self-drilling and self-tapping screws, lag bolts, nails or in cases of steel on steel attachments, by arc-welding. Use of attachment methods not detailed in these guidelines must be engineered on an individual job basis subject to approval by the enforcement agency. Note: The structural engineer of record shall verify that attachment details specified by the RDP are in accordance with the design concept for the primary structure.

3) Expansion anchors shall be Hilti Kwik Bolt TZ2, Powers Power-Stud+ SD1, Mason Ind. N.Y. SAS(E) or Powers Power-Stud+ SD2 for minimum 3000 psi concrete slabs, beams, or walls and concrete filled decks (sand light or normal weight) installed in accordance with ICC Reports ICC ESR 4266, 2818, 3037 or 2502, respectively. Hilti Kwik Bolt TZ2 expansion anchors shall be used to resist static and transient seismic tension and shear loads in uncracked, grout-filled concrete masonry. Expansion anchors designed to ICC-ES AC01 are limited to allowable stress design only in accordance with AC01 1.2. SEOR shall verify that: (1) masonry is not cracked as defined in ICC-ES AC01 Section 2.3; calculation required to show masonry wall would not crack under the design earthquake loads under all service load conditions; wall has to remain elastic; (2) masonry wall shall be fully grouted in accordance with ESR-4561 Section 3.2; (3) condition of use requirements in accordance with ESR-4561 Section 5.0 is satisfied. When expansion anchors are used, 50 percent of alternate bolts in a group shall be tension tested or torque tested per 2013 CBC Section 1913A.7 or 2016/2019/2022 CBC Section 1910A.5. Testing shall be done in the presence of the special inspector and a report of the test results shall be submitted to the enforcement agency. If any anchors fail, test all previously untested anchors installed by the same trade until 20 consecutive anchors pass. Then resume the original test frequency. Refer to page A0.4 or A0.5 for test loads.

4) Concrete inserts shall be Hilti KCM-WF/PD, Dewalt/Powers Wood Knocker/Wood Knocker II+, or Caddy CRLW for installation in normal or sand lightweight concrete slabs or HIlti KCM-MD-SP/LP, Dewalt/Powers Bang-It+ or DDI+, or Caddy CRLM for installation in normal or sand lightweight concrete filled metal decks installed in accordance with applicable ICC Reports ICC ESR 4145, 3657, 3958, or 3864.

5) All welded attachments shall be minimum 70xx electrode welds. Minimum 60xx electrode welds may be used for steel thicknesses that are 12 gauge or less.

6) Metal decks for expansion anchor attachments and inserts shall be minimum 20 gauge with either a maximum 3 inch flute and minimum 1-1/2 inch cover or a maximum 1-1/2 inch flute and minimum 2-1/4 inch cover. Refer to appropriate M2 and N2 pages for allowable deck anchor attachments. Concrete fill shall be minimum 3000 psi sand lightweight concrete. *Note:* Metal decks with minimum 3000 psi stone aggregate concrete fill may use the sand lightweight concrete deck charts.

7) Concrete attachments are based on specified anchor bolts or inserts. Substitution of alternate anchors must be approved by Mason West and the enforcement agency on a job by job basis.

8) When installing drilled-in anchors in existing non-prestressed reinforced concrete, use care and caution to avoid cutting or damaging reinforcing bars. When installing them in existing prestressed concrete, locate the prestressed tendons by using a non-destructive method and do not cut or damage the tendons during installation.

MASON WEST
1601 E. Miraloma Ave. Placentia, CA 92870
TEL (714) 630 - 0701, www.masonwest.com

Jiefu "Jeff" Zhang, SE
California SE No. S5270

PAGE
A1.4

ACCEPTED FOR CODE COMPLIANCE
OPM-0043
BY: William Staehlin
DATE: 01/23/2023
ORANGE COUNTY BUILDING CODES

DUCTWORK GENERAL NOTES (continued)

9) Attachments are provided for wide flange structural steel members, open web steel trusses as well as wood trusses, joists, and beams in Section N3.11-3.13, N4.10-4.13.

10) Screw anchors shall be Powers Screw-Bolt+/Hangermate+, Mason Ind. N.Y. SAST, or Hilti Kwik HUS-EZ/HUS-EZ I for minimum 3000 psi concrete slabs, beams, or walls and concrete filled decks (sand light or normal weight) installed in accordance with ICC Reports ICC ESR 3889, 2713 or 3027, respectively. Testing shall be done in the presence of the special inspector and a report of the test results shall be submitted to the enforcement agency. If any anchors fail, test all previously untested anchors installed by the same trade until 20 consecutive anchors pass. Then resume the original test frequency. Screw anchors shall not be tested using a torque wrench. Screw anchors may be loosened a maximum of one full turn to facilitate the positioning of a tension test collar. Following the tension test, the anchor shall be re-torqued in accordance with the manufacturer's installation instructions. Refer to page A0.6 or A0.7 for test loads.

Notes on Suspended HVAC Ducts and Factory Built Vent Duct:

Note: Ductwork designed to carry toxic, highly toxic or flammable gases, or used for smoke control shall be designed and braced without considering the exceptions noted below.

1) Per 2013/2016 CBC Sections 1616A.1.18 & 1616A.1.24, ASCE 7-10 Sections 13.1.4 and 13.6.7, design for the seismic forces are not required for HVAC Ductwork and Factory Built Vent Duct where any of the following are satisfied:
   a) The component is positively attached to the structure; and the project is designated as Seismic Design Categories D, E or F; flexible connections are provided between the duct and the component/equipment; and the duct weighs 5 lbs/ft or less; or
   b) Trapeze assemblies are used to support ductwork and the total weight of the ductwork supported by trapeze assemblies is less than 10 lbs/ft; or
   c) The ductwork is supported by hangers and each hanger in the duct run is 12" or less in length from the duct support point to the supporting structure (refer to Note 2 below for 12" Inch Rule). Where rod hangers are used with a diameter greater than 3/8", they shall be equipped with swivels, eye bolts or other devices to prevent inelastic bending of the rod; or
   d) Provisions are made to avoid impact with larger ducts or mechanical components or to protect the ducts in the event of such impact and the HVAC ducts or Factory Built Vent Ducts have a cross-sectional area of 6 ft^2 or less or weigh 10 lbs/ft or less.

   Note: Seismic Design Category and I_P can be found in the general notes of the structural drawings for a specific project under Design Criteria.

2) Section A4 of these guidelines details the "12 Inch Rule" exception described in Note 1c for Suspended HVAC Ducts and Factory Built Vent Duct.

3) Ductwork conforming to SMACNA standards, including but not limited to duct construction and joint connections, shall be braced at a maximum transverse and longitudinal brace spacing of 30 feet and 60 feet, respectively.

4) Rectangular and oval ductwork shall be supported at seismic brace locations with a trapeze support member sized to carry the gravity load of the ductwork; a minimum of (2) threaded vertical hanger rods. An upper support member over top of the duct is required when seismic bracing is attached to the top. The trapeze and upper support members must be fastened to the ductwork with sheet metal screws as detailed in Section D. Refer to Sections B and T for sizing of the trapeze and upper support members. Refer to installation pages for connection details from the ductwork to the trapeze members.

REVIEWED FOR CODE COMPLIANCE
OPM-0043
By: William Staehlin
Date: 1/23/2023
CALIFORNIA BUILDING CODE 2022

MASON WEST
1601 E. Miraloma Ave. Placentia, CA 92870
TEL (714) 630 - 0701, www.masonwest.com

Jiefu "Jeff" Zhang, SE
California SE No. S5270

PAGE
A1.5

DUCTWORK GENERAL NOTES FOR 2019/2022 CBC (continued)

9) Attachments are provided for wide flange structural steel members, open web steel trusses as well as wood trusses, joists, and beams in Section N3.11-3.13, N4.10-4.13.

10) Screw anchors shall be Powers Screw-Bolt+/Hangermate+, Mason Ind. N.Y. SAST, or Hilti Kwik HUS-EZ/HUS-EZ I for minimum 3000 psi concrete slabs, beams, or walls and concrete filled decks (sand light or normal weight) installed in accordance with ICC Reports ICC ESR 3889, 2713 or 3027, respectively. Testing shall be done in the presence of the special inspector and a report of the test results shall be submitted to the enforcement agency. If any anchors fail, test all previously untested anchors installed by the same trade until 20 consecutive anchors pass. Then resume the original test frequency. Screw anchors shall not be tested using a torque wrench. Screw anchors may be loosened a maximum of one full turn to facilitate the positioning of a tension test collar. Following the tension test, the anchor shall be re-torqued in accordance with the manufacturer's installation instructions. Refer to page A0.6 or A0.7 for test loads.

Notes on Suspended HVAC Ducts and Factory Built Vent Duct:

Note: Ductwork designed to carry toxic, highly toxic or flammable gases, or used for smoke control shall be designed and braced without considering the exceptions noted below.

1) Per 2019/2022 CBC Sections 1601A.1.4 & 1617A.1.18 applicable only to OSHPD-1,2,4,5 and 1R designated projects, distributed HVAC Ductwork and Factory Built Vent Duct weighing 5 lbs/ft or less are exempt from design for the seismic forces of ASCE 7-16 Section 13.3. For remaining duct systems, per 2019/2022 CBC Section 1617A.1.25, design for the seismic forces and relative displacements shall not be required for HVAC Ductwork and Factory Built Vent Duct where flexible connections or other assemblies are provided to accommodate the relative displacement between the duct system and associated components, the duct system is positively attached to the structure, and where one of the following apply:
   a) Trapeze assemblies with $\frac{3}{8}$" or $\frac{1}{2}$" diameter rod hangers not exceeding 12" in length from the duct support point to the connection at the supporting structure are used to support duct, and the total weight supported by any single trapeze is less than 10 lb/ft and 100 lbs or less; or
   b) The duct is supported by individual rod hangers $\frac{3}{8}$" or $\frac{1}{2}$" in diameter, and each hanger in the duct run is 12" or less in length from the duct support point to the connection at the supporting structure, and the total weight supported by any single rod is 50 lbs or less.

2) Design for the seismic forces and relative displacements shall not be required where provisions are made to avoid impact with other ducts or mechanical components or to protect the ducts in the event of such impact, the distribution system is positively attached to the structure, and HVAC Ductwork or Factory Built Vent Duct have a cross-sectional area of less than 6 square feet and weigh 20 lbs/ft or less.

3) Ductwork conforming to SMACNA standards, including but not limited to duct construction and joint connections, shall be braced at a maximum transverse and longitudinal brace spacing of 30 feet and 60 feet, respectively.

4) Rectangular and oval ductwork shall be supported at seismic brace locations with a trapeze support member sized to carry the gravity load of the ductwork; a minimum of (2) threaded vertical hanger rods. An upper support member over top of the duct is required when seismic bracing is attached to the top. The trapeze and upper support members must be fastened to the ductwork with sheet metal screws as detailed in Section D. Refer to Sections B and T for sizing of the trapeze and upper support members. Refer to installation pages for connection details from the ductwork to the trapeze members.

OPM-0043
Reviewed for Code Compliance by William Staehlin
DATE: 01/23/2023
CALIFORNIA BUILDING CODE 2022

MASON WEST
1601 E. Miraloma Ave. Placentia, CA 92870
TEL (714) 630 - 0701, www.masonwest.com

Jiefu "Jeff" Zhang, SE
California SE No. S5270

PAGE
A1.5a

DUCTWORK GENERAL NOTES (continued)

5) Multiple ducts may be combined in a single frame and braced based on the combined duct weight.

6) Wall penetrations may be considered transverse brace locations where duct is tightly blocked, subject to approval by the SEOR. If a breakaway smoke damper is present, its ability to accept the transverse seismic load shall be evaluated on a case by case basis. The Engineer of Record or the Project Architect must verify the ability of the wall to accommodate the transverse seismic load.

7) Floor penetrations of vertical duct may be considered transverse and longitudinal brace locations where duct is tightly blocked, no smoke dampers are installed, and the distance from the floor penetration to the inside of the 90 degree turn horizontal is less than 2 feet.

8) Components or equipment that are installed in-line with the duct system and have an operating weight greater than 75 lbs such as fans, heat exchangers, humidifiers and VAV/CAV/ATU boxes, etc. shall be supported and laterally braced independent of the duct system. Unbraced piping attached to in-line components or equipment shall be provided with adequate flexibility (e.g. flexible connections or (3) 90 degree offsets) to accommodate the seismic relative displacements.

9) Components or equipment that are installed in-line with the duct system and have an operating weight of 75 lbs or less such as fans, heat exchangers, humidifiers and VAV/CAV/ATU boxes, etc. and are otherwise not independently braced shall be positively attached with mechanical fasteners to the rigid duct on both sides. Unbraced piping attached to in-line components or equipment shall be provided with adequate flexibility (e.g. flexible connections or (3) 90 degree offsets) to accommodate the seismic relative displacements.

   Note: If the in-line duct device requires special seismic certification or an OSHPD OSP, support and lateral bracing shall be provided as specified in the certification or OSP document, regardless of in-line duct device operating weight.

10) The appendix of this manual tabulates the duct weight per foot for rectangular and round ductwork of different sizes and gages.

11) If a 2 piece rod is used to support ductwork, minimum engagement of the rod in the coupling nut shall be equal to the rod diameter. Rods shall be run up tight in the coupling nut.

Notes on Vertical Risers:

1) Vertical ductwork systems supported at each floor shall be considered seismically braced if the penetration through each floor is tightly packed and the floor-to-floor spacing is not in excess of 30 feet. Tops of risers exceeding 3 feet shall be provided with a 4-way brace. Where the 4-way brace is attached on the horizontal ductwork, it shall be installed within 2 feet of the centerline of the riser.

2) Vertical duct risers in an open shaft must be attached to steel supports with both steel supports and connections sized to accept the combined gravity and seismic loads. Thermal loads shall be considered, where applicable. Lateral seismic restraint spacing shall not exceed 30 feet. Supports and connections must be engineered on a job by job basis subject to approval by the enforcement agency. Seismic relative displacement between floors shall be considered in the design.

REVIEWED FOR CODE COMPLIANCE
HCAI
OPM-0043
BY: William Staehlin
DATE: 01/23/2023
CALIFORNIA BUILDING CODE, 2022

MASON WEST
1601 E. Miraloma Ave. Placentia, CA 92870
TEL (714) 630 - 0701, www.masonwest.com

Jiefu "Jeff" Zhang, SE
California SE No. S5270

PAGE
A1.6

DUCTWORK DESIGN PROCEDURE

Follow the five steps below to determine the seismic kit installation, hanger and brace connection details that pertain to a specific suspended duct system. An example is provided on the following pages.

Step 1. **Determine 'g' Forces:**
Calculate the lateral acceleration, F_P, and vertical acceleration, F_{PV}, in terms of 'g' using the equations outlined on page A1.0 for each level of the building.

Step 2. **Determine Operating Weight (lbs/ft or lbs):**
Determine the operating weight, W_P, of the distribution system (lbs/ft) or component (lbs) to be seismically braced. Refer to the appendix for rectangular and round duct weights.

Step 3. **Determine Seismic Forces (lbs):**
Determine the maximum allowable brace spacings from page A1.5, note 3. *If you choose to use the pre-designed schedules in Section B, skip the remainder of this step.*
Calculate the maximum lateral and vertical forces applied to the seismic brace system. Resolve the maximum lateral force to the brace, F_P, and maximum load on the hanger rod, T_{Rod}.

The resultant compression load on the hanger rod at seismic brace locations may be calculated to determine if rod stiffening is required.

Step 4. **Select Seismic Kit Installation, Hanger and Brace connection Details:** Select the appropriate details from the schedules in Section B for rectangular, round or factory built vent duct based on maximum 'g' force, system weight per foot and maximum transverse, longitudinal and all directional brace spacing.

If you calculated the seismic forces in step 3, verify the details selected are correct by comparing the calculated lateral force, F_P, and load on the hanger rod, T_{Rod}, with the rated loads tabulated on the detail sheets. If F_P and T_{Rod} are less than or equal to the tabulated rated loads, the details are acceptable.

Step 5. **Select Trapeze Upper and Lower Members:**
Select the upper and lower trapeze members from the tables in Section B or T for transverse, longitudinal and all-directional seismic braces based on 'g' force and maximum span of trapeze member.

REVIEWED FOR CODE COMPLIANCE
OPM-0043
BY: William Staehlin
DATE: 01/23/2023
CALIFORNIA BUILDING CODE, 2022

MASON WEST
1601 E. Miraloma Ave. Placentia, CA 92870
TEL (714) 630 - 0701, www.masonwest.com

Jiefu "Jeff" Zhang, SE
California SE No. S5270

PAGE
A2.0

DUCTWORK DESIGN PROCEDURE (continued)

Example:

70" x 48" x 18 gauge rectangular ductwork, constructed per SMACNA standards, is suspended within a 3 story poured-in place concrete building with basement. The ductwork is supported at every 8 feet. The elevation of each floor, including the basement, is 15 feet. The short period spectral acceleration, S_{DS}, listed on the contract structural drawings, is 1.02. The component importance factor, $I_P = 1.5$.

Note: When anchoring to concrete, allowable loads have been reduced by the concrete overstrength factor, Ωo, where applicable, in Sections M & N. Therefore, Ωo is not used when calculating applied seismic forces in this example.

Step 1. **Determine 'g' Forces**

Component amplification and response modification factors for suspended ductwork, constructed by means other than welding or brazing are as follows:

$a_P = 2.5$; $R_P = 6.0$

Therefore,

$$F_P = (0.7)\frac{0.4(2.5)(1.02)W_P}{(6.0)/(1.5)}(1+2\frac{z}{h}) = 0.18(1+2\frac{z}{h})W_P$$

$$F_{P(min)} = (0.7)(0.3)(1.02)(1.5)W_P = 0.32W_P$$

$$F_{P(max)} = (0.7)(1.6)(1.02)(1.5)W_P = 1.71W_P$$

$$F_{PV} = (0.7)(0.2)(1.02)W_P = 0.14W_P$$

Tabulated below are the 'g' forces for each level of the building

Floor Level	F_P	F_{PV}
Basement	0.32g	0.14g
1	0.32g	0.14g
2	0.42g	0.14g
3	0.54g	0.14g

Step 2. **Determine Operating Weight (lbs/ft):**

From page APP1.3, the operating weight of an 70" x 48" x 18 gauge rectangular ductwork is 45.4 lbs/ft.

HCAi
REVIEWED FOR CODE COMPLIANCE
OPM-0043
BY: William Staehlin
DATE: 01/23/2023
CALIFORNIA BUILDING CODE, 2022

MASON WEST
1601 E. Miraloma Ave. Placentia, CA 92870
TEL (714) 630 - 0701, www.masonwest.com

Jiefu "Jeff" Zhang, SE
California SE No. S5270

PAGE
A2.1

DUCTWORK DESIGN PROCEDURE (continued)

Step 3. **Determine Seismic Forces (lbs):**

From page A1.5 Note 3, the maximum transverse and longitudinal brace spacing for suspended ductwork (constructed of ductile materials with ductile connections) is 30 feet and 60 feet, respectively, for all levels.

Note: At this point, you have the option to calculate the seismic forces and loads on the hanger rods and complete this step or move on to step 4.

For Basement Level and Level 1,

F_P (Transverse) = 0.32 x 45.4 lbs/ft x 30 ft brace spacing = 436 lbs
F_P (Longitudinal) = 0.32 x 45.4 lbs/ft x 60 ft brace spacing = 872 lbs
F_{PV} = 0.14 x 45.4 lbs/ft x 8 ft support spacing = 51 lbs

Note: Fp does not need to be increased due to installation tolerances indicated in assembly details.

For seismic solid brace installations:

$T_{Rod} = F_P \tan(\text{brace angle}) + (45.4 \text{ lbs/ft} \times 8 \text{ ft} + F_{PV})/2 = 643$ lbs.

Note: Brace angle = 45 degrees for this example. Longitudinal loads considered split evenly to each rod.

For seismic cable brace installations:

$T_{Rod} = (45.4 \text{ lbs/ft} \times 8 \text{ ft} + F_{PV})/2 = 207$ lbs.

Note: In both seismic solid and cable brace T_{Rod} calculations, the gravity loads are assumed to be evenly distributed to each hanger. If this is not the case, make the necessary adjustment.

Similarly for Levels 2 and 3, F_P, F_{PV} and T_{Rod} are as tabulated below.

Floor Level	F_P	F_{PV}	T_{Rod}(Solid)	T_{Rod}(Cable)
Basement	436 lbs	51 lbs	643 lbs	207 lbs
1	436 lbs	51 lbs	643 lbs	207 lbs
2	572 lbs	51 lbs	779 lbs	207 lbs
3	735 lbs	51 lbs	942 lbs	207 lbs

$C_{Rod} = F_P \tan(\text{brace angle}) + F_{PV} - 0.9Wp$
$= 436 \text{ lbs} \times \tan(45 \text{ degrees}) + 51 \text{ lbs}/2 - 0.9 \times (45.4 \text{ lbs/ft} \times 8 \text{ ft})/2 = 298$ lbs.

Note: If $C_{Rod} \leq 0$, rod stiffeners are not required.

REVIEWED FOR CODE COMPLIANCE
HCAi
OPM-0043
BY: William Staehlin
DATE: 01/23/2023
CALIFORNIA BUILDING CODE 2022

MASON WEST
1601 E. Miraloma Ave. Placentia, CA 92870
TEL (714) 630 - 0701, www.masonwest.com

Jiefu "Jeff" Zhang, SE
California SE No. S5270

PAGE
A2.2

DUCTWORK DESIGN PROCEDURE (continued)

Step 4. **Select Seismic Kit Installation, Hanger and Brace connection Details:**

For rectangular duct with operating weight of 45.4 lbs/ft, acceptable seismic kit installation, hanger and connection details from the charts in Section B for each level of the building are as tabulated below.

Seismic Solid (Rigid) Brace, Hanger and Brace connection Details

Floor Level	Fp	Section B Page	Tran/Long Spacing	Kit Installation Details			Trans./ Long. Hanger Conn. Desig.	All Dir. Hanger Conn. Desig.	Brace Conn. Desig.
				Transverse	Longitudinal	All-Directional			
Basement	0.32g	B2.1	30'/60'	D1.33	D1.34	N/A	63L	N/A	63J
1	0.32g	B2.1	30'/60'	D1.33	D1.34	N/A	63L	N/A	63J
2	0.42g	B2.1	30'/60'	D1.33	D1.34	N/A	63L	N/A	63J
3	0.54g	B2.2	20'/40'	D1.33	D1.34	D1.32	63M	63P	63L

Seismic Cable (Standard) Brace, Hanger and Brace connection Details

Floor Level	Fp	Section B Page	Tran/Long Spacing	Kit Installation Details			Hanger Conn. Desig.	Brace Conn. Desig.
				Transverse	Longitudinal	All-Directional		
Basement	0.32g	B2.4	20'/40'	D4.20	D4.21	D4.22	50E	50G
1	0.32g	B2.4	20'/40'	D4.20	D4.21	D4.22	50E	50G
2	0.42g	B2.4	20'/40'	D4.20	D4.21	D4.22	50E	50G
3	0.54g	B2.5	8'/16'	D4.20	D4.21	D4.22	50E	50F

For calculated F_P and T_{Rod} select the appropriate details in Sections D, M and N by comparing the calculated values with the tabulated values indicated on each detail.

Step 5. **Select Trapeze Upper and Lower Members:**

For a rectangular duct weighing 45.4 lbs/ft supported by a trapeze member with a maximum span between hanger rods of 78 in. and the seismic accelerations calculated in step 2, go to the tables in Section T1 to find the allowable trapeze members for transverse, longitudinal and all-directional seismic braces for each level of the building. For transverse brace spacing of 30 feet and longitudinal/all-directional brace spacing of 60 feet:

Trapeze Upper Member at Longitudinal and All-Directional Brace Locations

Floor Level	Fp	Section T Page	Longitudinal	All-Directional
Basement	0.32g	T1.2	3-1/4" Single Strut	3-1/4" Single Strut
1	0.32g	T1.2	3-1/4" Single Strut	3-1/4" Single Strut
2	0.42g	T1.3	3-1/4" Single Strut	3-1/4" Single Strut
3	0.54g	T1.4	3-1/4" Single Strut	3-1/4" Single Strut

Refer to page T1.0 for trapeze upper member at transverse brace locations and trapeze lower member at all brace locations; for these cases, trapeze member to be 1-5/8" Single Strut.

REVIEWED FOR CODE COMPLIANCE
HCAI
OPM-0043
BY: William Staehlin
DATE: 01/23/2023
CALIFORNIA BUILDING CODE 2022

MASON WEST
1601 E. Miraloma Ave. Placentia, CA 92870
TEL (714) 630 - 0701, www.masonwest.com

Jiefu "Jeff" Zhang, SE
California SE No. S5270

PAGE
A2.3

LAYOUT OF SEISMIC BRACES FOR DUCTWORK

Step 1. Separate the layout of the system into individual straight runs. A straight run is defined as a section of the utility between changes in direction. If an offset(s) occurs between changes of direction it may be neglected if the distance perpendicular to the run is less than 2 feet.

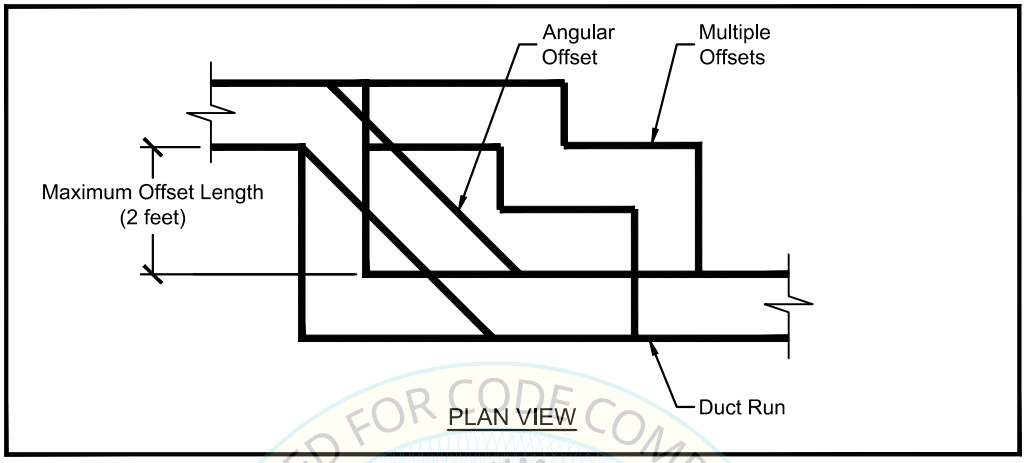

Step 2. Each straight run must be braced in the transverse direction (perpendicular to the run) at each end.

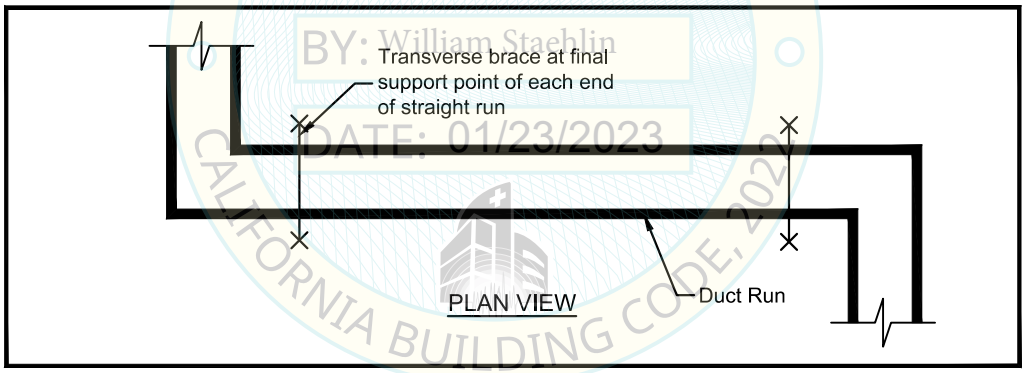

REVIEWED FOR CODE COMPLIANCE
HCAi
OPM-0043
BY: William Staehlin
DATE: 01/23/2023
CALIFORNIA BUILDING CODE, 2022

MASON WEST
1601 E. Miraloma Ave. Placentia, CA 92870
TEL (714) 630 - 0701, www.masonwest.com

Jiefu "Jeff" Zhang, SE
California SE No. S5270

PAGE
A3.0

LAYOUT OF SEISMIC BRACES FOR DUCTWORK (continued)

Step 3. Add transverse braces, if required, to limit the spacing(s) to the maximum spacing indicated in Section A.

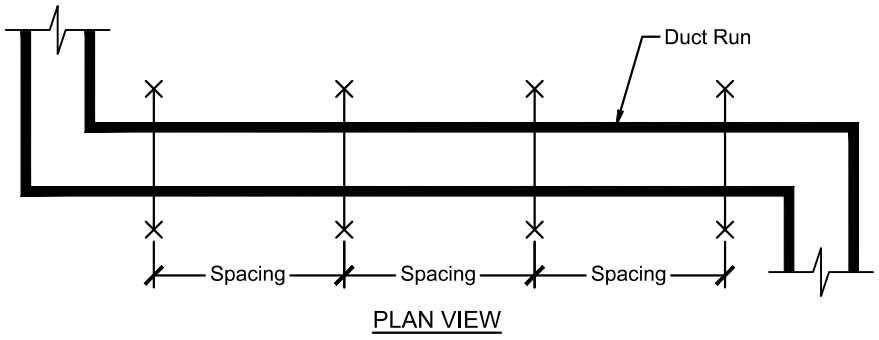

PLAN VIEW

Spacing [**Maximum transverse brace spacing**

Step 4. Each straight run must be braced in the longitudinal direction (parallel to the run) with at least one brace. Transverse braces within the maximum offset length discussed in Step 1 may be used in addition to or in lieu of independent longitudinal braces. The length of duct around a 90 degree turn (indicated as 'P' below) longitudinally braced from a transverse brace = S-0.5T-A, where:

S = Maximum Allowable Transverse Brace Spacing (30 feet per note 3, Page A1.5)
T = The distance between Transverse Braces
A = Offset Length [2 feet

REVIEWED FOR CODE COMPLIANCE
OPM-0043
BY: William Staehlin
DATE: 01/23/2023
CALIFORNIA BUILDING CODE, 2022

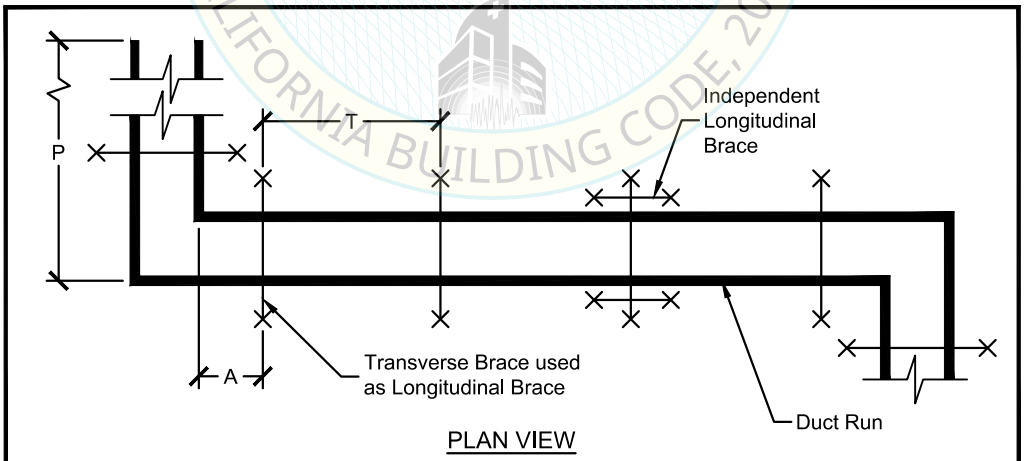

PLAN VIEW

MASON WEST
1601 E. Miraloma Ave. Placentia, CA 92870
TEL (714) 630 - 0701, www.masonwest.com

Jiefu "Jeff" Zhang, SE
California SE No. S5270

PAGE
A3.1

LAYOUT OF SEISMIC BRACES FOR DUCTWORK (continued)

Step 5. Multiple changes in direction may be treated as one complete system. Straight runs greater than the maximum offset length require 2 transverse braces. Straight runs less than the maximum offset length may require as few as one or no braces. (See layout below)

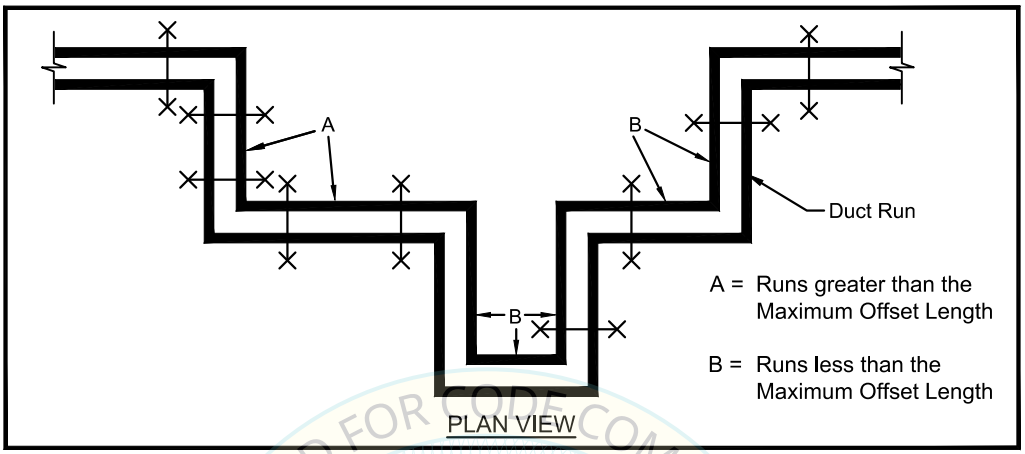

Step 6. Vertical drops to equipment must be restrained with a transverse brace at the final support point before the vertical drop. The distance from the transverse brace to the drop must be within the maximum offset length of the system. The maximum allowable length of the system braced from the transverse brace to the flexible connector is equal to ½ of the maximum transverse brace spacing indicated in Section A. If this distance is greater than ½ of the maximum transverse brace spacing, an additional brace is required at the end of the vertical drop by attaching to the floor. Consideration must be given to seismic relative displacements(SRD) imposed on duct when braced to the floor.

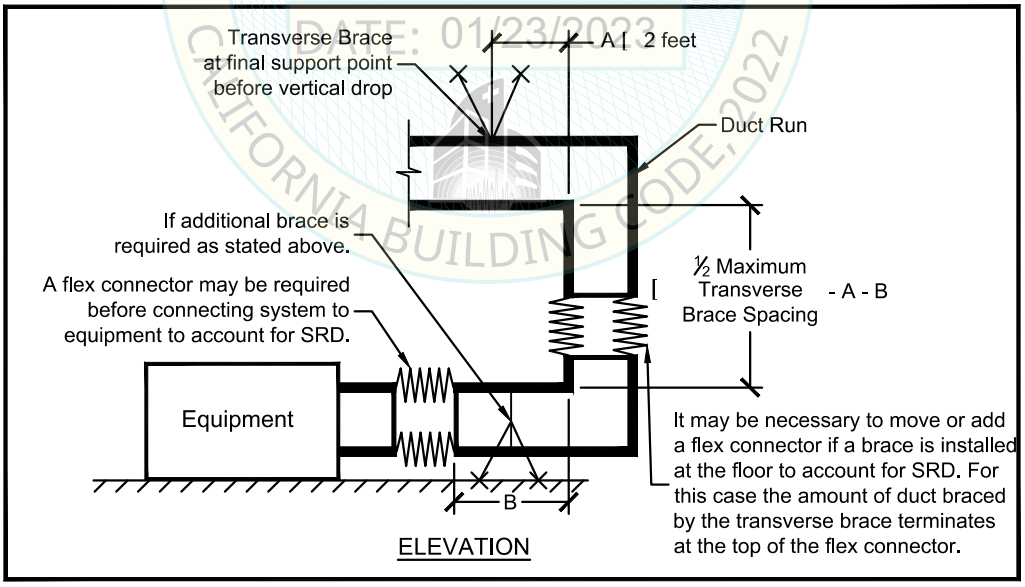

REVIEWED FOR CODE COMPLIANCE OPM-0043 BY: William Staehlin DATE: 01/23/2023 CALIFORNIA BUILDING CODE, 2022

MASON WEST
1601 E. Miraloma Ave. Placentia, CA 92870
TEL (714) 630 - 0701, www.masonwest.com

Jiefu "Jeff" Zhang, SE
California SE No. S5270

PAGE
A3.2

12" RULE FOR SUSPENDED DUCTWORK

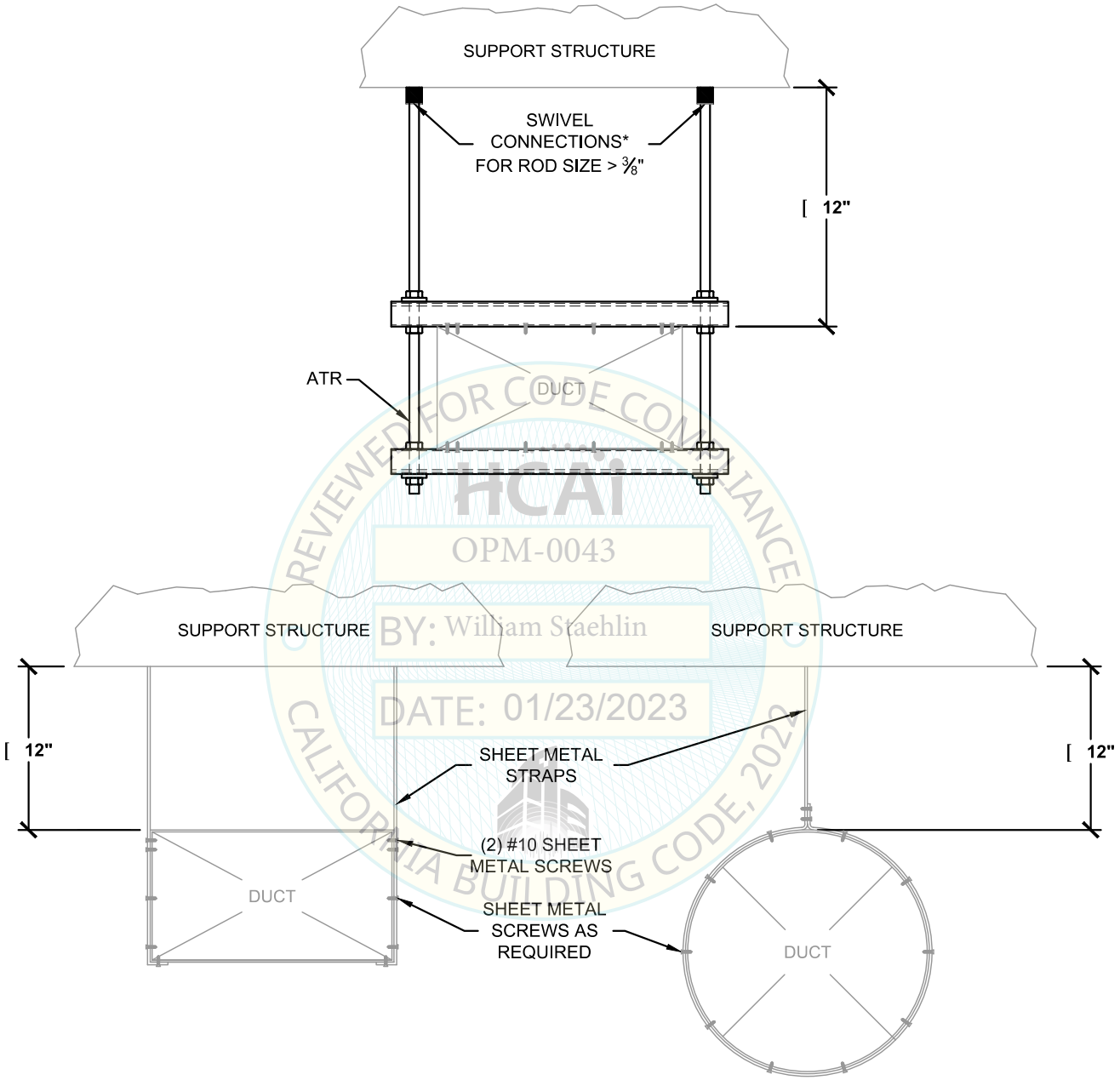

REVIEWED FOR CODE COMPLIANCE
HCAi
OPM-0043
BY: William Staehlin
DATE: 01/23/2023
CALIFORNIA BUILDING CODE, 2022

*NOTE: CONNECTIONS COMPLYING INCLUDE SWIVEL JOINTS, EYE BOLTS, ETC.

MASON WEST
1601 E. Miraloma Ave. Placentia, CA 92870
TEL (714) 630 - 0701, www.masonwest.com

Jiefu "Jeff" Zhang, SE
California SE No. S5270

PAGE
A4.0

SEISMIC BRACE REQUIREMENTS
FOR DUCTWORK ON MULTI-LAYER TRAPEZES

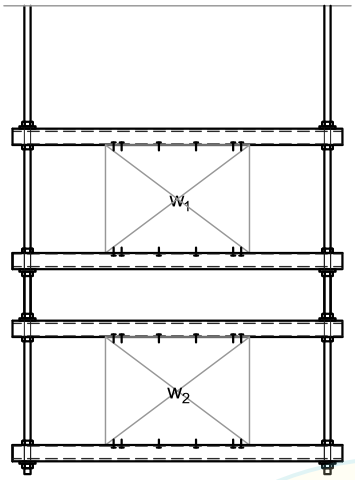

CASE 1
IF w_{total} < 10 LB/FT,
NO BRACING REQ'D

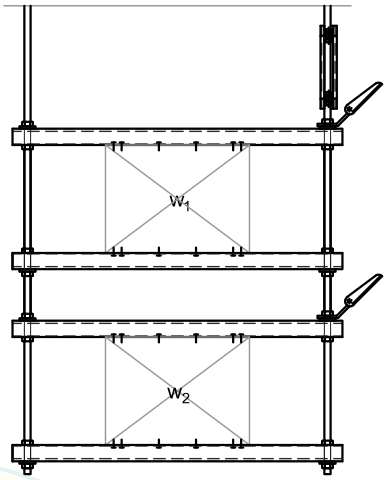

CASE 2
IF $w_1 \geq 10$ LB/FT AND $w_2 \geq 10$ LB/FT,
BRACE EACH LAYER INDEPENDENTLY

REVIEWED FOR CODE COMPLIANCE
HCAI
OPM-0043
BY: William Staehlin
DATE: 01/23/2023
CALIFORNIA BUILDING CODE, 2022

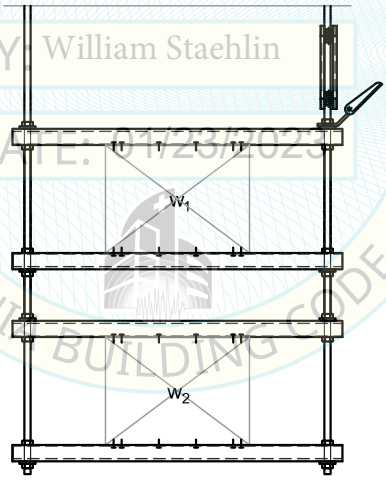

CASE 3
IF $w_{total} \geq 10$ LB/FT AND $w_2 <$ 10 LB/FT,
BRACE TOP TRAPEZE FOR w_{total}
(BOTTOM TRAPEZE NEED NOT BE BRACED PROVIDED THE
LOAD IS ACCOUNTED FOR IN THE NEAREST BRACED LAYER)

NOTES:
1) REGISTERED DESIGN PROFESSIONAL (RDP) SHALL VERIFY BRACE REQUIREMENTS LISTED ON PAGE A1.5.
2) HANGER REACTIONS SHALL BE DETERMINED FROM TOTAL DUCT WEIGHT FROM ALL LAYERS.

MASON WEST
1601 E. Miraloma Ave. Placentia, CA 92870
TEL (714) 630 - 0701, www.masonwest.com

Jiefu "Jeff" Zhang, SE
California SE No. S5270

PAGE
A4.1

TRANSVERSE BRACE ALLOWABLE ANGLE VARIATIONS IN PLAN FOR DUCTWORK

THE ANGLE VARIATION MAY INCREASE BEYOND 2.5 DEGREES UP TO 15 DEGREES PROVIDED THE TRANSVERSE BRACES ARE SKEWED IN THE SAME DIRECTION AND A LONGITUDINAL BRACE OCCURS OPPOSITE THE SKEWED ANGLE DIRECTION AS SHOWN BELOW.

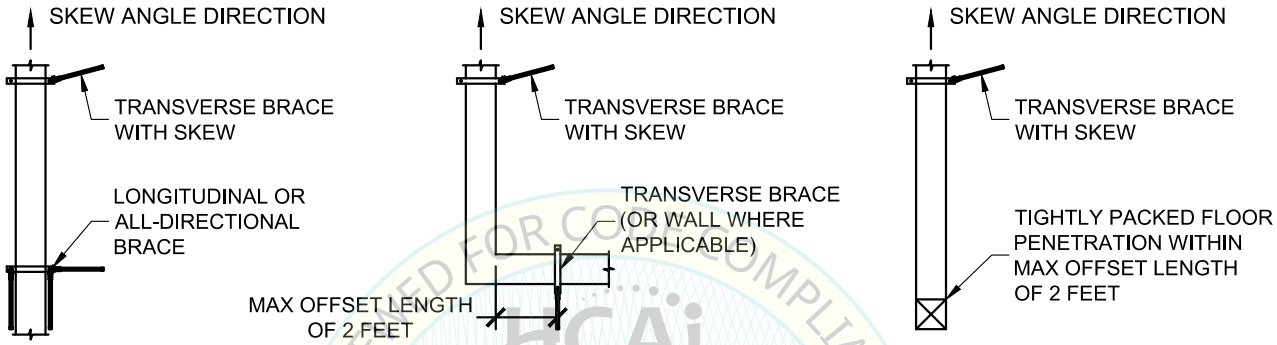

SOLID BRACE

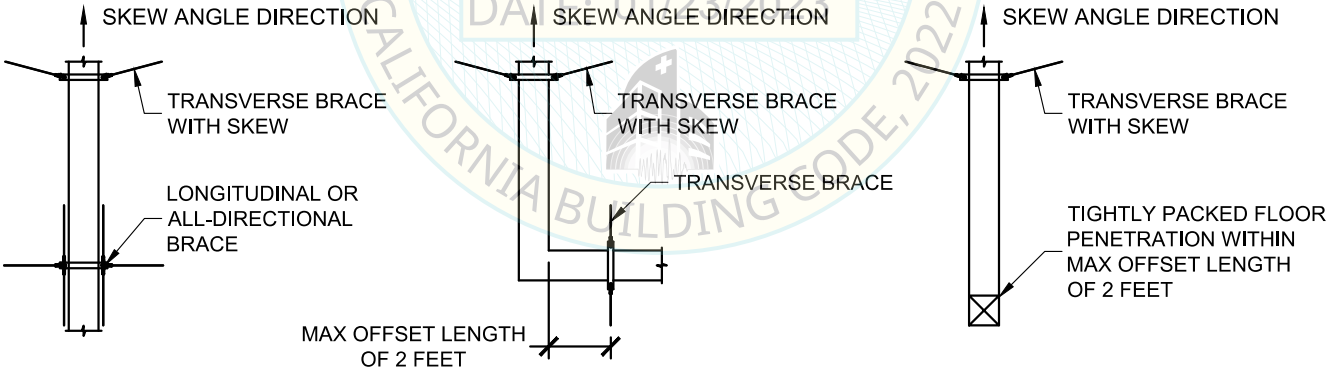

CABLE BRACE

NOTE: ANY OR ALL BRACE LOCATIONS ARE PERMITTED TO USE THE ANGLE VARIATION TO MEET FIELD CONDITIONS.

REVIEWED FOR CODE COMPLIANCE
HCAi
OPM-0043
BY: William Staehlin
DATE: 01/23/2023
CALIFORNIA BUILDING CODE, 2022

MASON WEST
1601 E. Miraloma Ave. Placentia, CA 92870
TEL (714) 630 - 0701, www.masonwest.com

Jiefu "Jeff" Zhang, SE
California SE No. S5270

PAGE
A5.0

ALTERNATE ARRANGEMENT OF SEISMIC BRACES FOR DUCTWORK, IN-LINE DEVICES, AND SUSPENDED EQUIPMENT

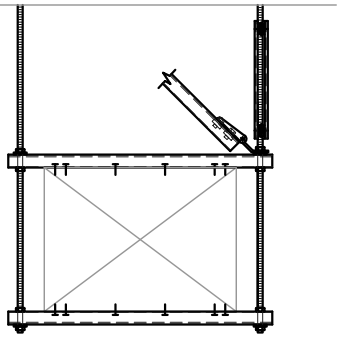

ELEVATION VIEW
SOLID BRACE INSTALLED
IN-BETWEEN HANGERS
(TRANSVERSE OR
ALL-DIRECTIONAL BRACE)

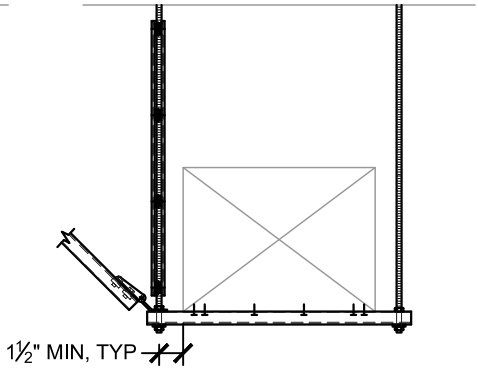

ELEVATION VIEW
SOLID BRACE INSTALLED AT
BOTTOM TRAPEZE
(TRANSVERSE BRACE ONLY)

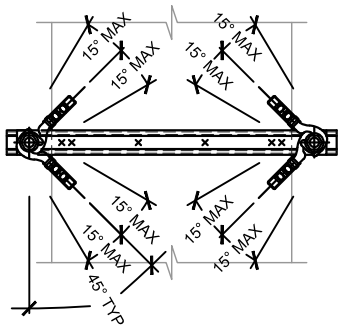

PLAN VIEW
CABLE X-PATTERN BRACE INSTALLED
IN-BETWEEN HANGERS

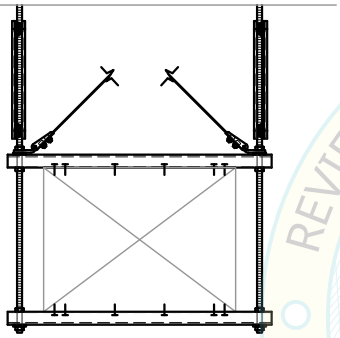

ELEVATION VIEW
CABLE BRACE INSTALLED
IN-BETWEEN HANGERS

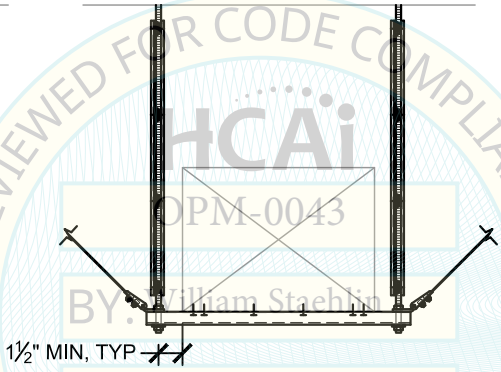

ELEVATION VIEW
CABLE BRACE INSTALLED AT
BOTTOM TRAPEZE
(TRANSVERSE BRACE ONLY)

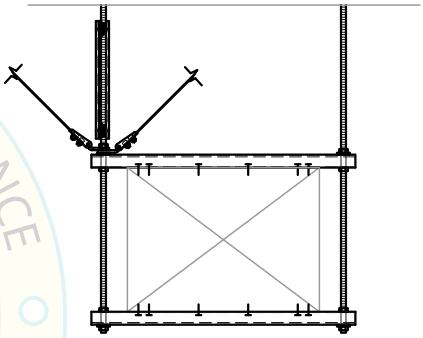

ELEVATION VIEW
CABLE BRACE INSTALLED AT
SINGLE HANGER
(TRANSVERSE BRACES ONLY)

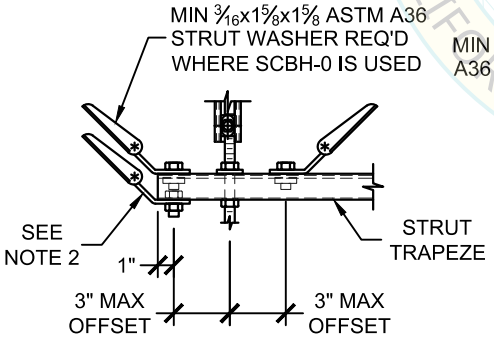

(TRANSVERSE
BRACE ONLY)

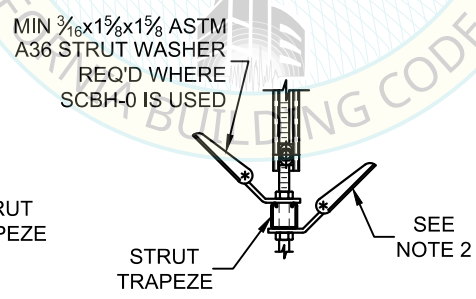

(LONGITUDINAL OR
ALL-DIRECTIONAL BRACE)

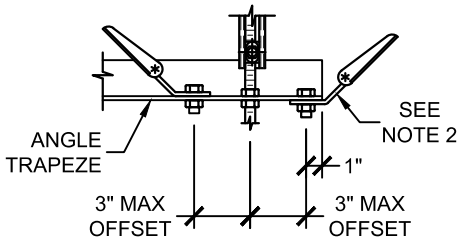

(TRANSVERSE, LONGITUDINAL
OR ALL-DIRECTIONAL BRACE)

SEISMIC BRACE BRACKET OFFSET FROM HANGER RODS

NOTES:
1) REFER TO APPROPRIATE DETAIL D PAGES FOR DIMENSIONS AND NOTATIONS NOT SHOWN.
2) WHEN INSTALLING SHB TO BOTTOM OF TRAPEZE, MW-KY SHB KEY IS REQ'D (REF. X2.4).

REVIEWED FOR CODE COMPLIANCE
HCAi
OPM-0043
BY: William Staehlin
DATE: 1/23/2023
CALIFORNIA BUILDING CODE, 2022

MASON WEST
1601 E. Miraloma Ave. Placentia, CA 92870
TEL (714) 630 - 0701, www.masonwest.com

Jiefu "Jeff" Zhang, SE
California SE No. S5270

PAGE
A6.0

ALTERNATE ARRANGEMENT OF SEISMIC BRACES FOR DUCTWORK, IN-LINE DEVICES, AND SUSPENDED EQUIPMENT

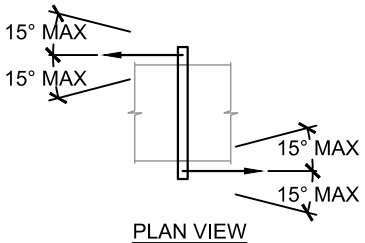

PLAN VIEW
LONGITUDINAL SOLID BRACES
INSTALLED IN ALTERNATING DIRECTIONS

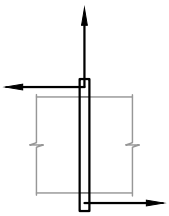

PLAN VIEW
ALL-DIRECTIONAL SOLID BRACES
INSTALLED IN ALTERNATING DIRECTIONS

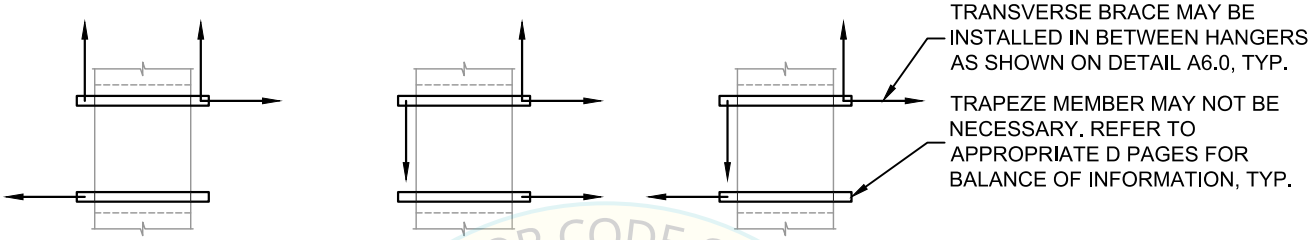

PLAN VIEW
ALL-DIRECTIONAL SOLID BRACES INSTALLED IN ALTERNATING DIRECTIONS

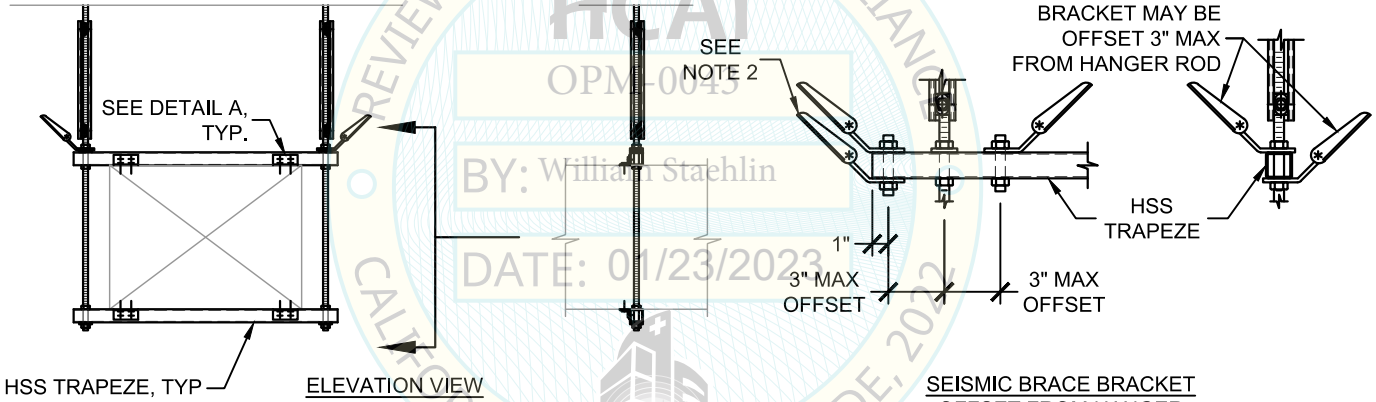

ELEVATION VIEW
DUCT ATTACHMENT TO HSS TRAPEZE

SEISMIC BRACE BRACKET OFFSET FROM HANGER ROD FOR HSS TRAPEZE

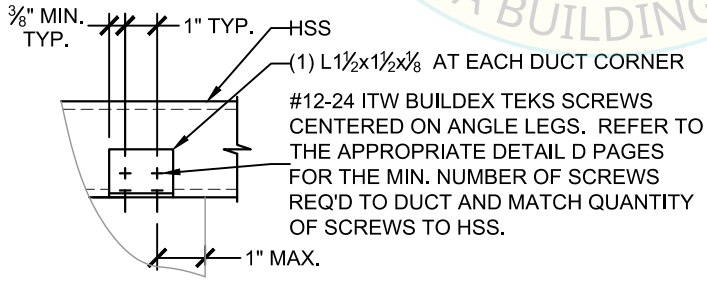

DETAIL A

NOTES:
1) REFER TO APPROPRIATE DETAIL D PAGES FOR DIMENSIONS AND NOTATIONS NOT SHOWN.
2) WHEN INSTALLING SHB TO BOTTOM OF TRAPEZE, MW-KY SHB KEY IS REQ'D (REF. X2.4).
3) ALLOWABLE ANGLE RANGES ARE TYPICAL FOR ALL ARRANGEMENTS OF SEISMIC BRACES.

HCAi
OPM-0043
BY: William Staehlin
DATE: 01/23/2023
REVIEWED FOR CODE COMPLIANCE
CALIFORNIA BUILDING CODE, 2022

MASON WEST
1601 E. Miraloma Ave. Placentia, CA 92870
TEL (714) 630 - 0701, www.masonwest.com

Jiefu "Jeff" Zhang, SE
California SE No. S5270

PAGE
A6.1

ALTERNATE ARRANGEMENT OF SEISMIC BRACES FOR DUCTWORK, IN-LINE DEVICES, AND SUSPENDED EQUIPMENT

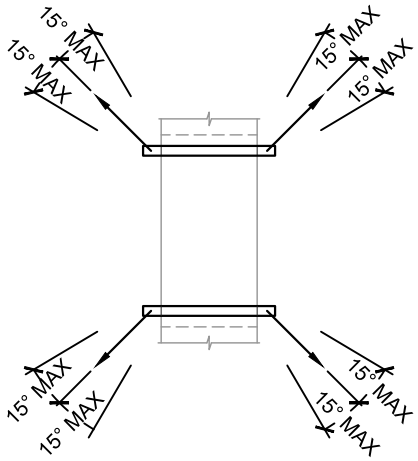

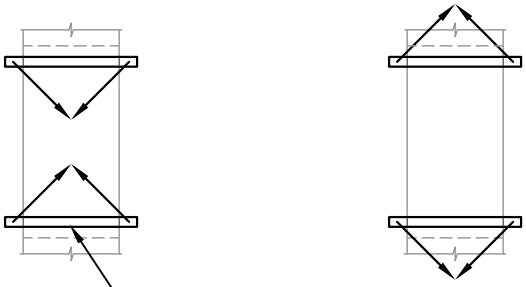

TRAPEZE MEMBERS MAY NOT BE NECESSARY. REFER TO APPROPRIATE D PAGES FOR BALANCE OF INFORMATION, TYP.

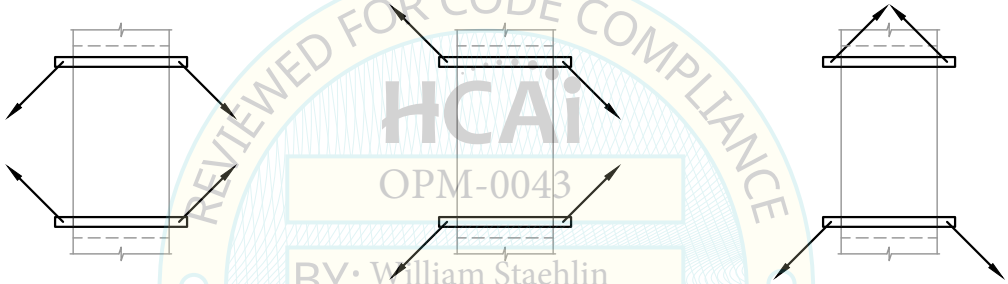

PLAN VIEW
SPLIT X-PATTERN CABLE BRACING INSTALLED IN ALTERNATING DIRECTIONS

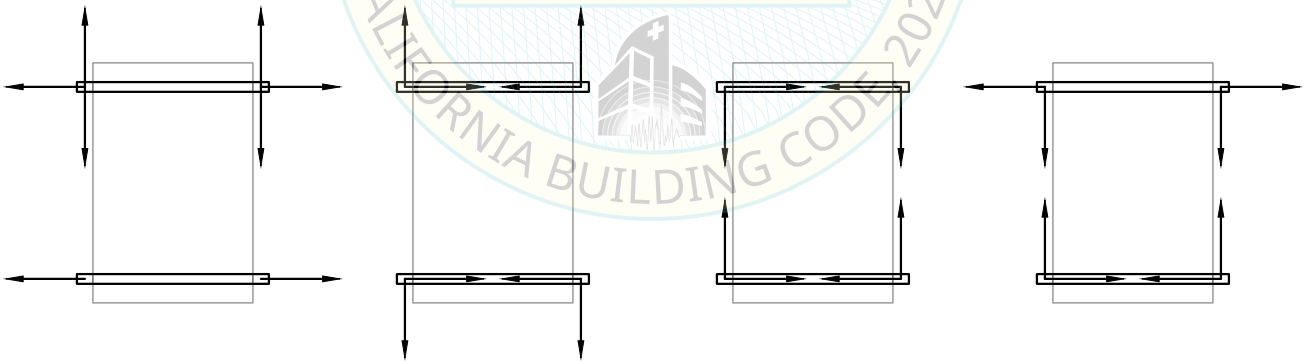

PLAN VIEW
CABLE BRACING INSTALLED IN ALTERNATING DIRECTIONS

REVIEWED FOR CODE COMPLIANCE
HCAi
OPM-0043
BY: William Staehlin
DATE: 01/23/2023
CALIFORNIA BUILDING CODE 2022

NOTES:
1) REFER TO APPROPRIATE DETAIL D PAGES FOR DIMENSIONS AND NOTATIONS NOT SHOWN.
2) ALLOWABLE ANGLE RANGES ARE TYPICAL FOR ALL ARRANGEMENTS OF SEISMIC BRACES.
3) RESULTANT FORCE SHALL NOT MEET AT A SINGLE POINT TO PREVENT ROTATION AT THE CENTER OF GRAVITY.

MASON WEST
1601 E. Miraloma Ave. Placentia, CA 92870
TEL (714) 630 - 0701, www.masonwest.com

Jiefu "Jeff" Zhang, SE
California SE No. S5270

PAGE
A6.2

SEISMIC SOLID BRACING OFF STRUT HANGER TRANSVERSE OPTION FOR SUSPENDED DUCTWORK

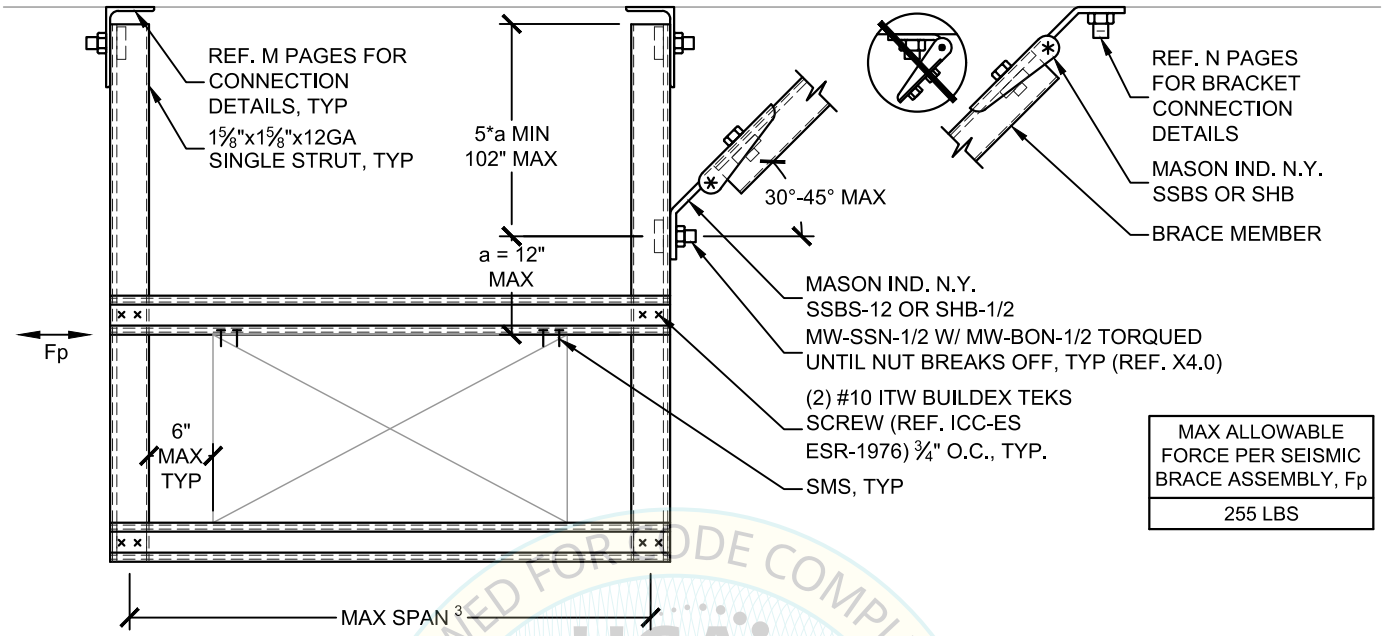

MAX ALLOWABLE FORCE PER SEISMIC BRACE ASSEMBLY, Fp
255 LBS

SINGLE STRUT OPTION

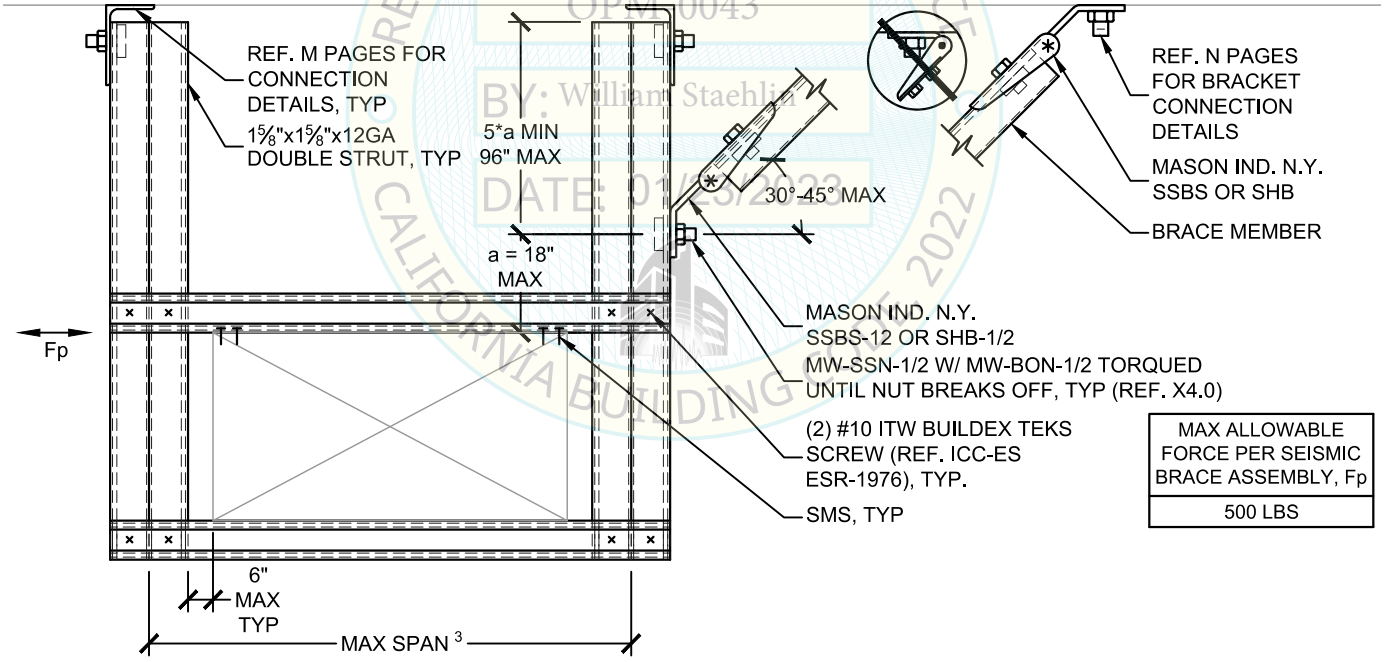

MAX ALLOWABLE FORCE PER SEISMIC BRACE ASSEMBLY, Fp
500 LBS

DOUBLE STRUT OPTION

OPM-0043
BY: William Staehlin
DATE: 01/23/2023

NOTES:

1) REFER TO APPROPRIATE D PAGES FOR DIMENSIONS AND ANNOTATIONS NOT SHOWN.
2) SINGLE STRUT AND DOUBLE STRUT OPTIONS MAY CARRY UP TO A MAXIMUM OF 30LBS/FT OR 60LBS/FT, RESPECTIVELY.
3) REFER TO T PAGES FOR TRAPEZE SELECTION FOR MAX STRUT SPAN.

MASON WEST
1601 E. Miraloma Ave. Placentia, CA 92870
TEL (714) 630 - 0701, www.masonwest.com

Jiefu "Jeff" Zhang, SE
California SE No. S5270

PAGE
A7.0

SEISMIC SOLID BRACING OFF STRUT HANGER
LONGITUDINAL OPTION FOR SUSPENDED DUCTWORK

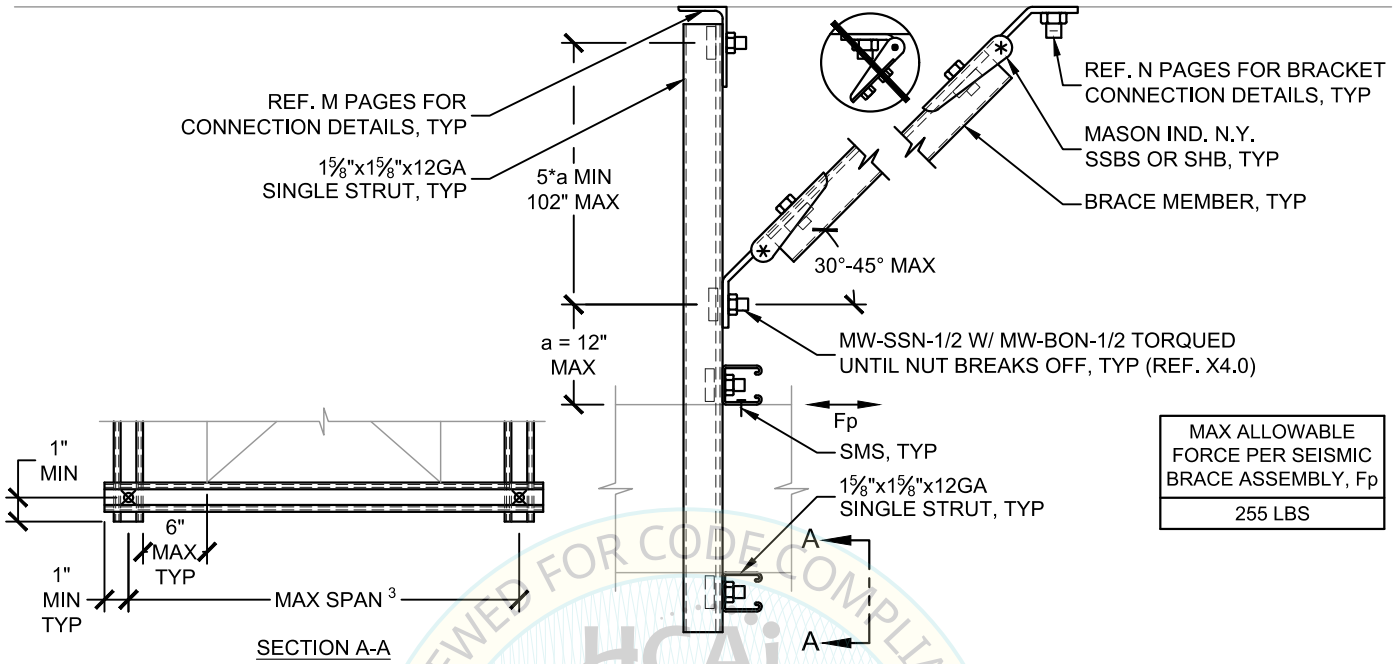

MAX ALLOWABLE FORCE PER SEISMIC BRACE ASSEMBLY, Fp
255 LBS

SECTION A-A

SINGLE STRUT OPTION

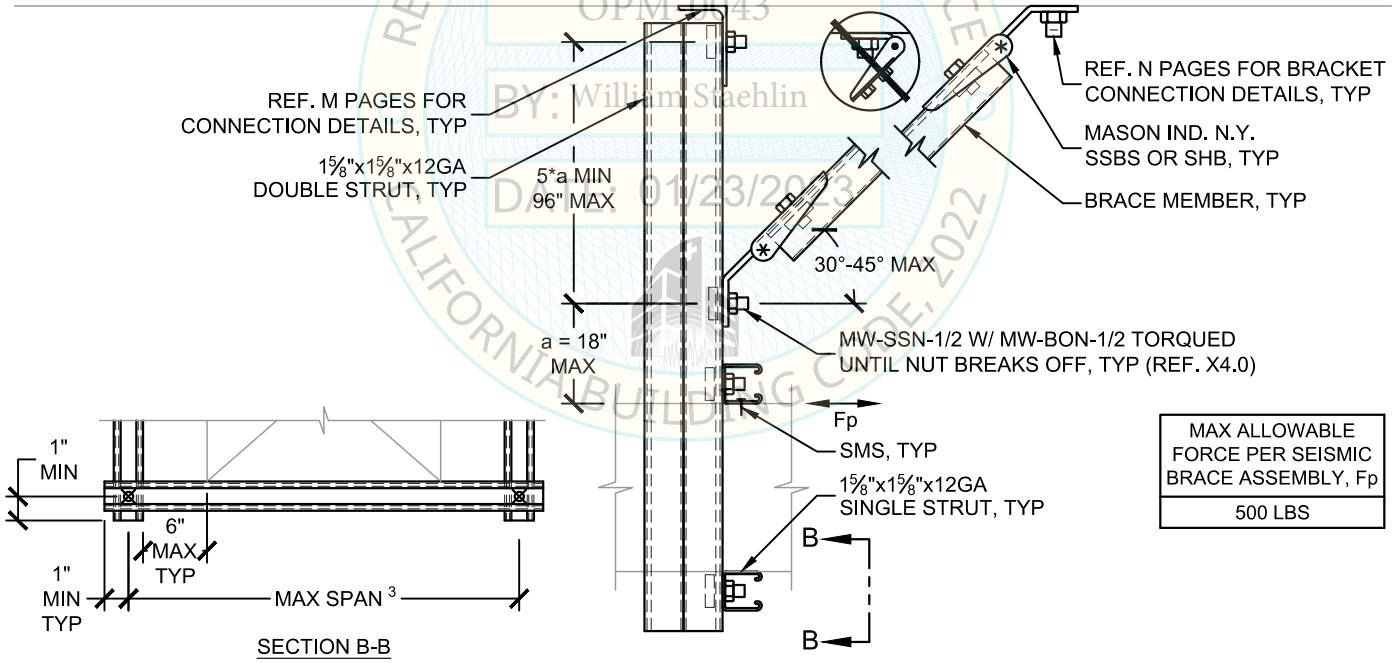

MAX ALLOWABLE FORCE PER SEISMIC BRACE ASSEMBLY, Fp
500 LBS

SECTION B-B

DOUBLE STRUT OPTION

REVIEWED FOR CODE COMPLIANCE
CALIFORNIA BUILDING CODE 2022
HCAi
OPM-0043
BY: William Staehlin
DATE: 01/23/2023

NOTES:
1) REFER TO APPROPRIATE D PAGES FOR DIMENSIONS AND ANNOTATIONS NOT SHOWN.
2) SINGLE STRUT AND DOUBLE STRUT OPTIONS MAY CARRY UP TO A MAXIMUM OF 30LBS/FT OR 60LBS/FT, RESPECTIVELY.
3) REFER TO T PAGES FOR TRAPEZE SELECTION FOR MAX STRUT SPAN.

MASON WEST
1601 E. Miraloma Ave. Placentia, CA 92870
TEL (714) 630 - 0701, www.masonwest.com

Jiefu "Jeff" Zhang, SE
California SE No. S5270

PAGE
A7.1

SEISMIC CABLE BRACING OFF STRUT HANGER TRANSVERSE OPTION FOR SUSPENDED DUCTWORK

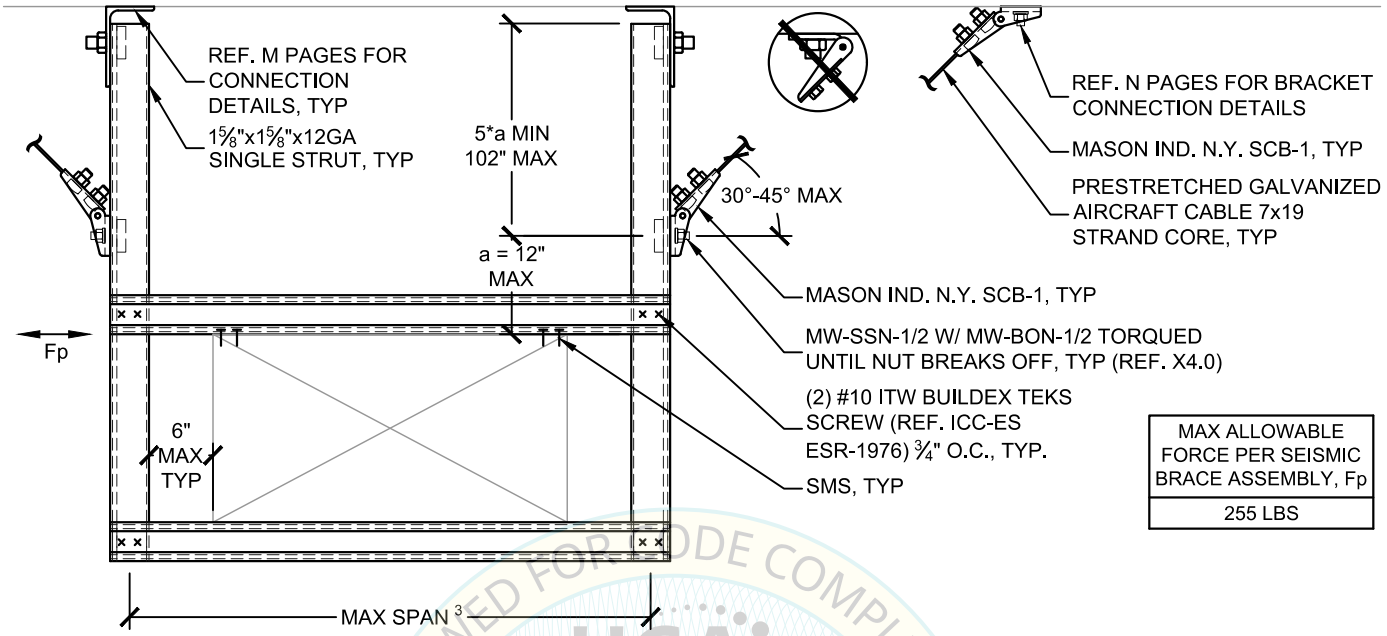

MAX ALLOWABLE FORCE PER SEISMIC BRACE ASSEMBLY, Fp
255 LBS

SINGLE STRUT OPTION

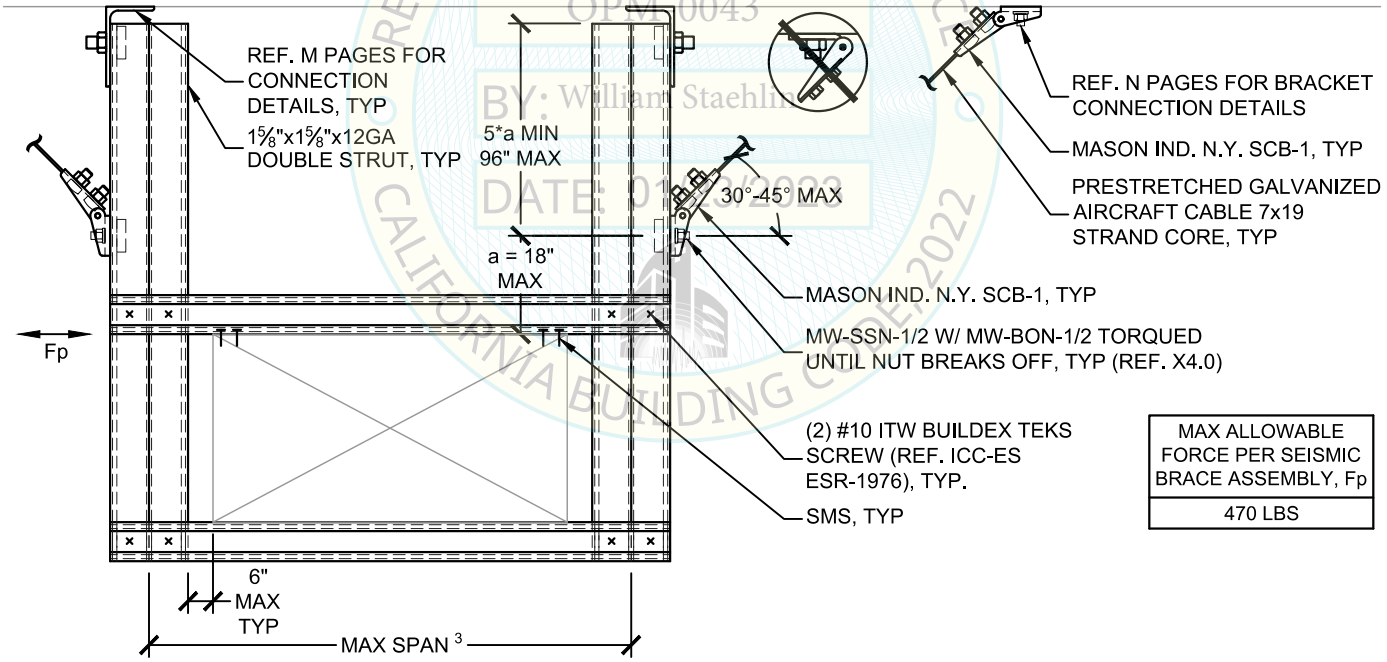

MAX ALLOWABLE FORCE PER SEISMIC BRACE ASSEMBLY, Fp
470 LBS

DOUBLE STRUT OPTION

NOTES:
1) REFER TO APPROPRIATE D PAGES FOR DIMENSIONS AND ANNOTATIONS NOT SHOWN.
2) SINGLE STRUT AND DOUBLE STRUT OPTIONS MAY CARRY UP TO A MAXIMUM OF 30LBS/FT OR 60LBS/FT, RESPECTIVELY.
3) REFER TO T PAGES FOR TRAPEZE SELECTION FOR MAX STRUT SPAN.

REVIEWED FOR CODE COMPLIANCE
CALIFORNIA BUILDING CODE 2022
OPM-0043
BY: William Staehlin
DATE: 01/23/2023

MASON WEST
1601 E. Miraloma Ave. Placentia, CA 92870
TEL (714) 630 - 0701, www.masonwest.com

Jiefu "Jeff" Zhang, SE
California SE No. S5270

PAGE
A7.2

SEISMIC CABLE BRACING OFF STRUT HANGER LONGITUDINAL OPTION FOR SUSPENDED DUCTWORK

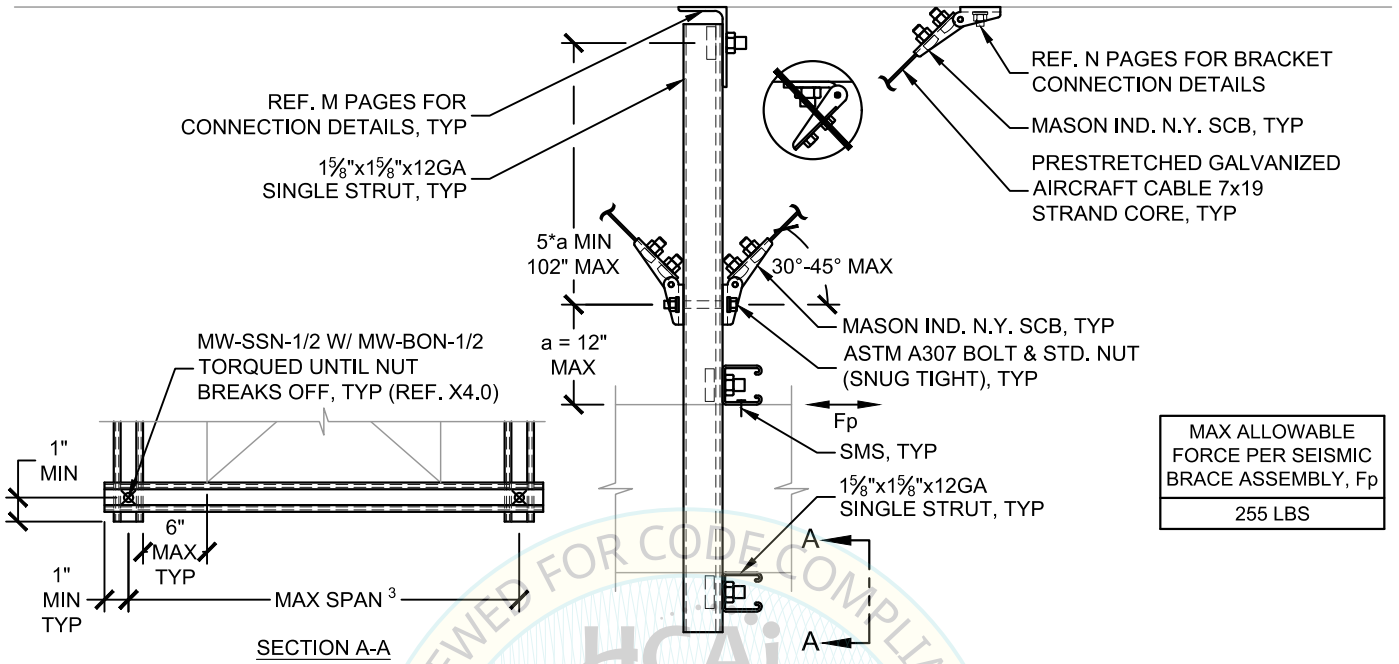

MAX ALLOWABLE FORCE PER SEISMIC BRACE ASSEMBLY, Fp
255 LBS

SINGLE STRUT OPTION

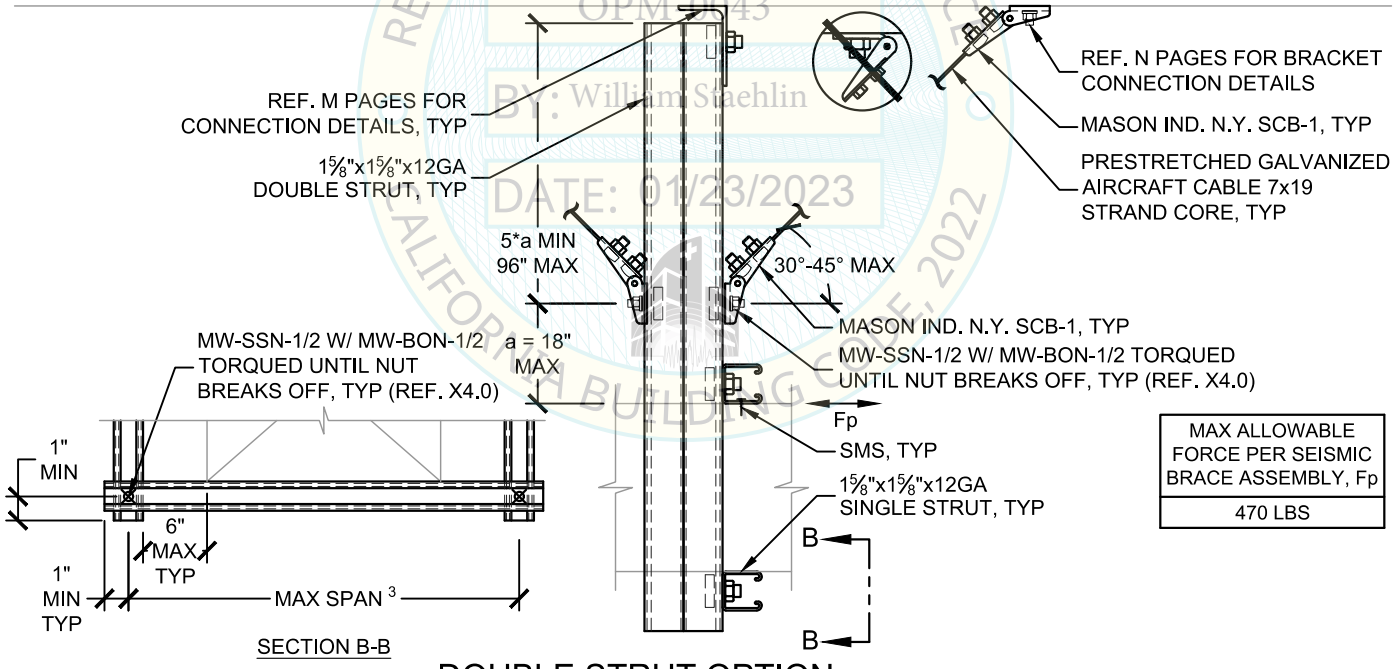

MAX ALLOWABLE FORCE PER SEISMIC BRACE ASSEMBLY, Fp
470 LBS

DOUBLE STRUT OPTION

REVIEWED FOR CODE COMPLIANCE
OPM-0043
BY: William Staehlin
DATE: 01/23/2023
CALIFORNIA BUILDING CODE 2022

NOTES:
1) REFER TO APPROPRIATE D PAGES FOR DIMENSIONS AND ANNOTATIONS NOT SHOWN.
2) SINGLE STRUT AND DOUBLE STRUT OPTIONS MAY CARRY UP TO A MAXIMUM OF 30LBS/FT OR 60LBS/FT, RESPECTIVELY.
3) REFER TO T PAGES FOR TRAPEZE SELECTION FOR MAX STRUT SPAN.

MASON WEST
1601 E. Miraloma Ave. Placentia, CA 92870
TEL (714) 630 - 0701, www.masonwest.com

Jiefu "Jeff" Zhang, SE
California SE No. S5270

PAGE
A7.3

TRANSVERSE SEISMIC BRACING OFF ROD STIFFENER FOR SUSPENDED DUCTWORK

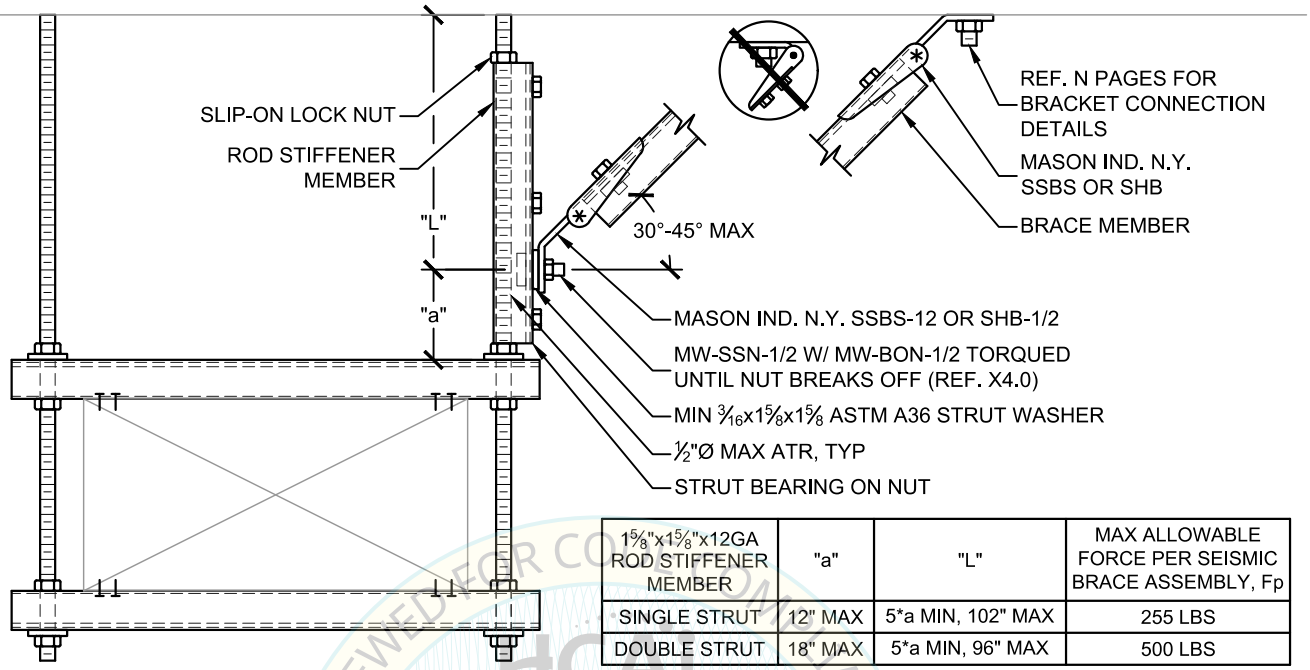

1⅝"x1⅝"x12GA ROD STIFFENER MEMBER	"a"	"L"	MAX ALLOWABLE FORCE PER SEISMIC BRACE ASSEMBLY, Fp
SINGLE STRUT	12" MAX	5*a MIN, 102" MAX	255 LBS
DOUBLE STRUT	18" MAX	5*a MIN, 96" MAX	500 LBS

SOLID BRACING OPTION

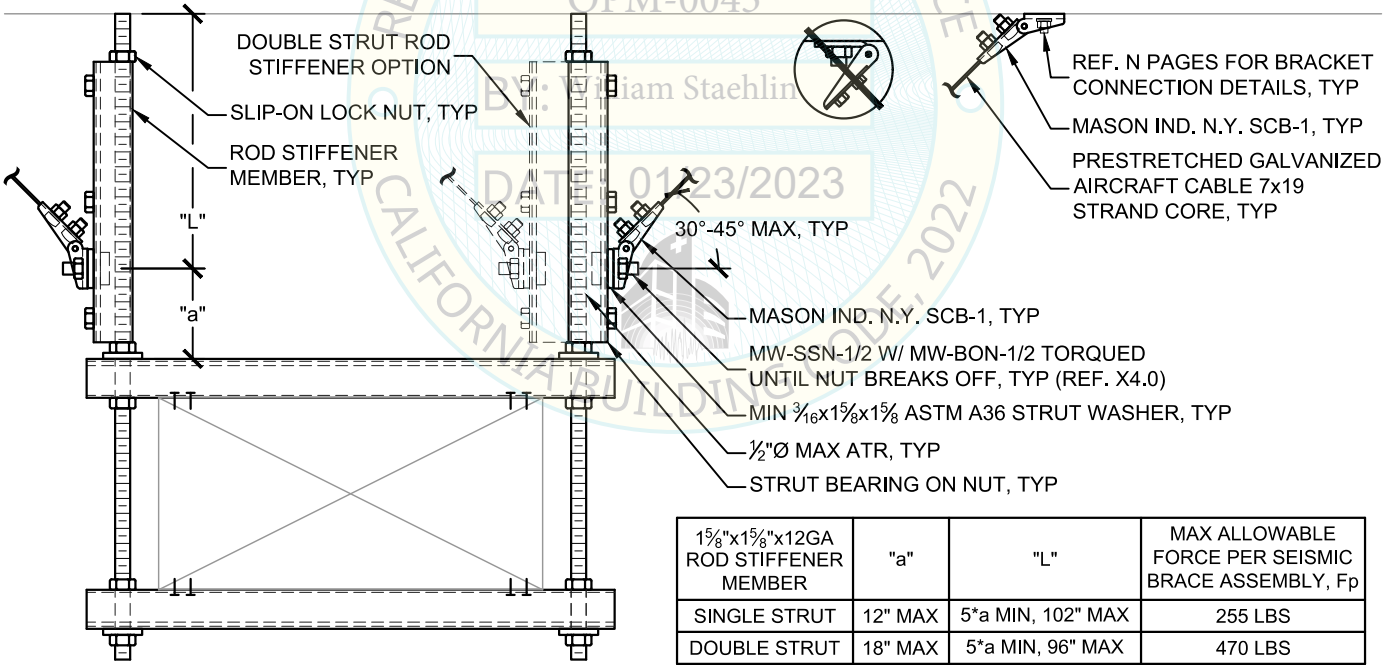

1⅝"x1⅝"x12GA ROD STIFFENER MEMBER	"a"	"L"	MAX ALLOWABLE FORCE PER SEISMIC BRACE ASSEMBLY, Fp
SINGLE STRUT	12" MAX	5*a MIN, 102" MAX	255 LBS
DOUBLE STRUT	18" MAX	5*a MIN, 96" MAX	470 LBS

CABLE BRACING OPTION

NOTE: REFER TO APPROPRIATE D PAGES FOR DIMENSIONS AND ANNOTATIONS NOT SHOWN.

MASON WEST
1601 E. Miraloma Ave. Placentia, CA 92870
TEL (714) 630 - 0701, www.masonwest.com

Jiefu "Jeff" Zhang, SE
California SE No. S5270

PAGE
A7.4

REVIEWED FOR CODE COMPLIANCE CALIFORNIA BUILDING CODE, 2022
HCAI OPM-0043
By: William Staehlin
DATE: 01/23/2023

LONGITUDINAL SEISMIC BRACING OFF ROD STIFFENER FOR SUSPENDED DUCTWORK

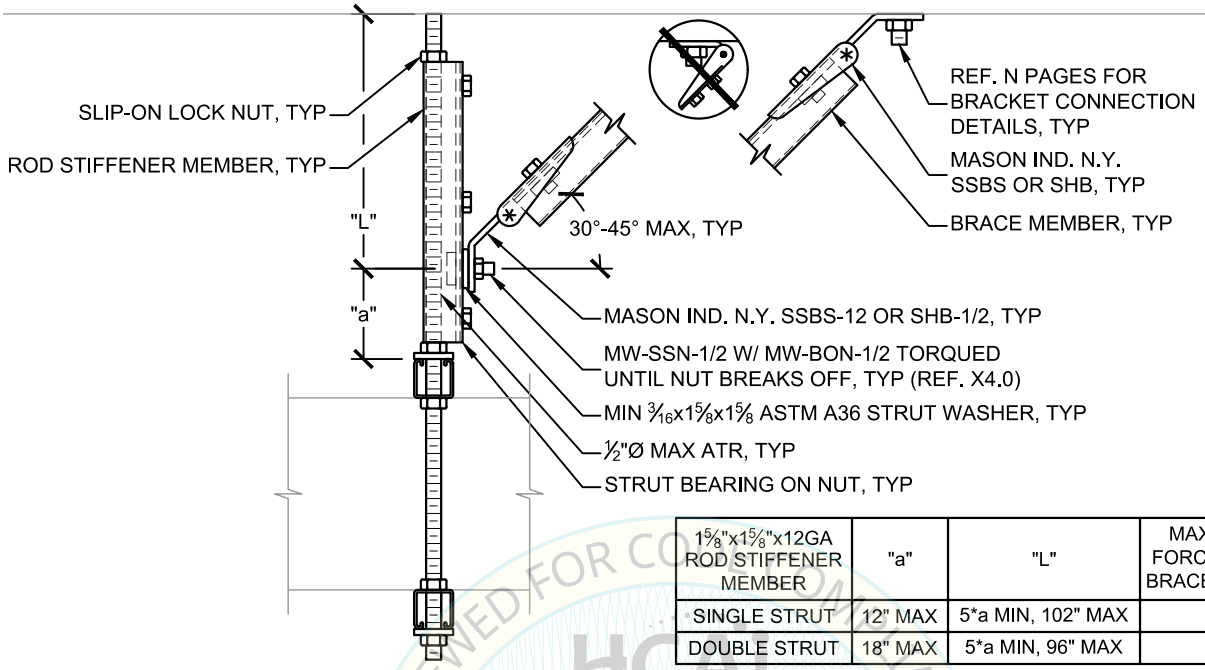

1⅝"x1⅝"x12GA ROD STIFFENER MEMBER	"a"	"L"	MAX ALLOWABLE FORCE PER SEISMIC BRACE ASSEMBLY, Fp
SINGLE STRUT	12" MAX	5*a MIN, 102" MAX	255 LBS
DOUBLE STRUT	18" MAX	5*a MIN, 96" MAX	500 LBS

SOLID BRACING OPTION

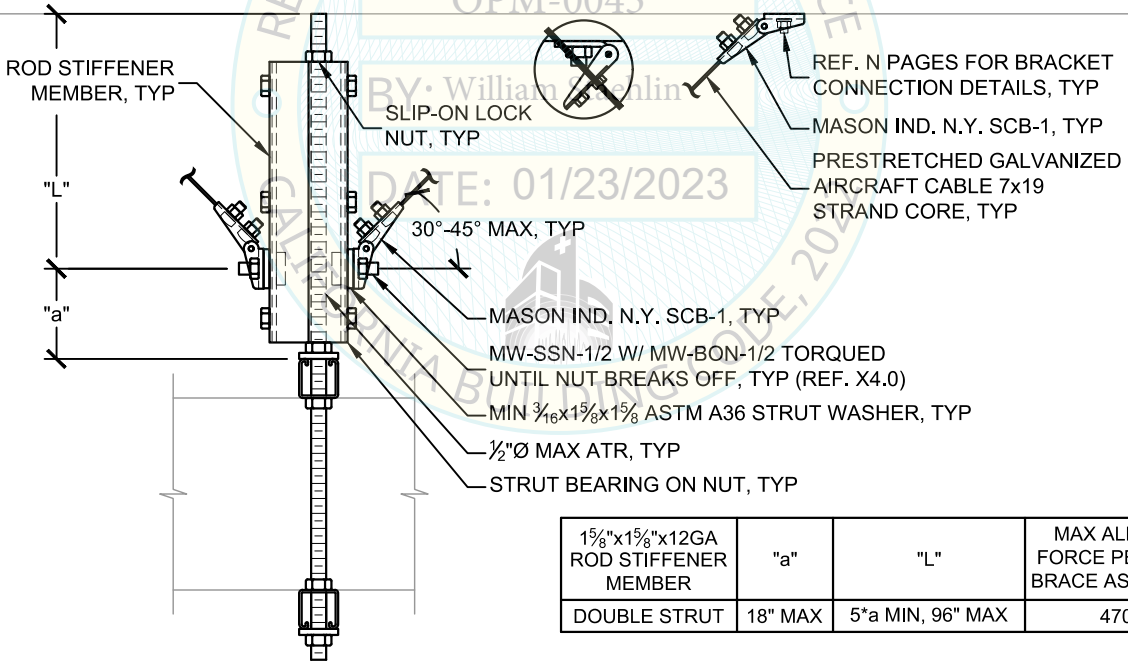

1⅝"x1⅝"x12GA ROD STIFFENER MEMBER	"a"	"L"	MAX ALLOWABLE FORCE PER SEISMIC BRACE ASSEMBLY, Fp
DOUBLE STRUT	18" MAX	5*a MIN, 96" MAX	470 LBS

CABLE BRACING OPTION

NOTE: REFER TO APPROPRIATE D PAGES FOR DIMENSIONS AND ANNOTATIONS NOT SHOWN.

MASON WEST
1601 E. Miraloma Ave. Placentia, CA 92870
TEL (714) 630 - 0701, www.masonwest.com

Jiefu "Jeff" Zhang, SE
California SE No. S5270

PAGE
A7.5

REVIEWED FOR CODE COMPLIANCE
HCAI
OPM-0043
BY: William Staehlin
DATE: 01/23/2023
CALIFORNIA BUILDING CODE, 2022

PIPING GENERAL NOTES

1) This OSHPD Preapproval of Manufacturer's Certification (OPM) is based on the 2013 CBC. The demand (design forces) for use with this OPM shall be based on the 2013 CBC.

2) Per ASCE 7-10, Section 13.3.1, restraints and their anchorages must be capable of restraining horizontal, F_P, and vertical, F_{PV}, seismic accelerations as follows.

$$F_P = (0.7)\frac{0.4a_P S_{DS} W_P}{R_P/I_P}(1+2\frac{z}{h}) \quad \text{(ASD)} \quad \text{(ASCE 7-10 EQ 13.3-1)}$$

is not required to be taken greater than $(0.7)1.6S_{DS}I_PW_P$ (ASD) (ASCE 7-10 EQ 13.3-2)

shall not be taken less than $(0.7)0.3S_{DS}I_PW_P$ (ASD) (ASCE 7-10 EQ 13.3-3)

$$F_{PV} = (0.7)0.2S_{DS}W_P \quad \text{(ASD)}$$

Where:

S_{DS} = short period spectral acceleration - up to 2.5g. Values of S_{DS} indicated in the general notes of the structural drawing take precedence over those calculated per ASCE 7-10, 11.4.4.

W_P = component (or tributary length of pipe) operating weight (lbs/ft).

I_P = component importance factor
= 1.5 for OSHPD 1 & 4 in accordance with 2013 CBC, Section 1616A.1.17 and for OSHPD 2 & 3, where required by ASCE 7, Section 13.1.3.
= 1.0 for OSHPD 2 & 3, when permitted by ASCE 7, Section 13.1.3.

a_P = component amplification factor (Ref. ASCE 7-10, Table 13.6-1)
= 1.0 for gravity waste, vent and drain cast iron plumbing pipe.
= 2.5 for all other piping and tubing.

R_P = component response modification factor (Ref. ASCE 7-10, Table 13.6-1)
= 2.5 for gravity, waste, vent and drain cast iron plumbing pipe.
= 3.0 for piping and tubing constructed of low-deformability materials such as cast iron, glass, and nonductile plastics.
= 4.5 for piping and tubing not in accordance with ASME B31, including in-line components, constructed of high- or limited-deformability materials, with joints made by threading, bonding, compression couplings, or grooved couplings.
= 6.0 for piping in accordance with ASME B31, including in-line components, constructed of high- or limited-deformability materials, with joints made by threading, bonding, compression couplings, or grooved couplings.
= 9.0 for piping and tubing not in accordance with ASME B31, including in-line components, constructed of high-deformability materials, with joints made by welding or brazing.
= 12.0 for piping in accordance with ASME B31, including in-line components with joints made by welding or brazing.
NOTE: Per ASCE 7-10, Section 13.4.1, do not use an Rp factor greater than 6.0 when calculating Fp and Fpv for design of the attachment.

z = height in structure of point of connection of component with respect to base (ft).

h = average roof height of structure with respect to base (ft).

3) For systems anchored to concrete only, the anchorage to concrete overstrength factor, Ωo, must be applied. Sections M & N provide alternate allowable load tables with and without Ωo applied. For cases where Ωo is applicable, use the appropriate tables in Sections M & N so it is not necessary to apply this factor when calculating F_P and F_{PV}. Ωo is not applicable if a yielding steel element is considered in the load path. Refer to ACI 318-11 Appendix D, Section D.3.3.4.3 or ACI 318-14 Chapter 17, Section 17.2.3.4.3 for a list of qualifying conditions. The Registered Design Professional (RDP) shall use the allowable vertical loads under overstrength factor Ωo = 2.0 unless the vertical support complies with one of the qualifying conditions.

MASON WEST
1601 E. Miraloma Ave. Placentia, CA 92870
TEL (714) 630 - 0701, www.masonwest.com

Jiefu "Jeff" Zhang, SE
California SE No. S5270

PAGE
A10.0

1/23/2023 OPM-0043: Reviewed for Code Compliance by William Staehlin 41 of 792

PIPING GENERAL NOTES (continued)

4) A complete description on how to use these guidelines is provided in Section A11. It includes specific examples for both using the enclosed details/charts and a layout procedure for bracing of suspended pipe systems.

Notes on Seismic Bracing:

1) These guidelines list installations which may be exempt from seismic bracing under the CBC. The RDP shall be responsible for determining whether to allow these exceptions, subject to approval by the SEOR and OSHPD.

2) Each straight run of a pipe system requires a minimum of two transverse braces (perpendicular to the run). (Option: A longitudinal brace located at any point of the straight run on the opposite side of an elbow or tee may act as a transverse brace. Refer to the layout examples detailed in Section A12.)

3) Each straight run of a pipe system requires a minimum of one longitudinal brace (parallel to the run). (Option: A transverse brace on the opposite side of an elbow or tee can act as a longitudinal brace. Refer to the layout examples detailed in Section A12.)
   Note: For items 2) and 3) above, a short run of piping may not require seismic bracing if its tributary seismic load transfers to an adjacent run of pipe that is sufficiently seismically braced that can accept the additional seismic loads, when approved by OSHPD for a specific project.

4) Transverse and longitudinal braces that project to the overhead structure shall be installed between 30 and 60 degrees from horizontal. Braces that project to an adjacent wall may be installed directly horizontal (zero degrees) or between 30 and 60 degrees from the horizontal. However, this is limited depending on the capacity of the brace and method of connection to structure.

5) Seismic bracing may consist of solid bracing designed to accept loads in tension and compression or cable bracing designed to accept tension loads only. Each brace method requires a vertical hanger within close proximity of their connection to the distribution system. (Refer to the specific detail for limitations). The vertical hanger may or may not require stiffening or additional anchorage to the structure (Refer to Notes on Supports, Page A10.2).

6) Avoid mixing solid bracing with cable bracing in the same direction on any run of a distribution system unless specifically engineered and approved by the enforcement agency.

7) Avoid bracing a system to two different parts of a building which may act differently in response to an earthquake (i.e. separated by a seismic joint). In cases where this may occur, the pipe run must be designed to accept the seismic relative displacement.

8) Systems with significant thermal motion shall be designed on a case by case basis by a professional engineer familiar with both seismic loading and thermal expansion.

9) Seismic brace details for suspended pipe systems include maximum allowable horizontal seismic load, F_P, at different brace angle ratios. The details include Mason Industries N.Y. seismic brace component size, aircraft cable or solid brace member size, acceptable hanger rod diameter(s) and hanger rod stiffening requirements. Trapeze member sizes and connection to structure for both hanger rods and seismic braces are tabulated and/or detailed in Sections B, T, M, and N, respectively.

REVIEWED FOR CODE COMPLIANCE
OPM 0043
By: William Staehlin
DATE: 01/23/2023
CALIFORNIA BUILDING CODE, 2022

MASON WEST
1601 E. Miraloma Ave. Placentia, CA 92870
TEL (714) 630 - 0701, www.masonwest.com

Jiefu "Jeff" Zhang, SE
California SE No. S5270

PAGE
A10.1

PIPING GENERAL NOTES (continued)

10) Seismic brace requirements for seismic accelerations ranging from 0.25 to 1.0g (ASD) are tabulated in Sections B1. Each schedule is designed to a specific seismic acceleration and provides maximum transverse, longitudinal and all-directional brace spacings based on operating weight per lineal foot of the pipe system. In addition, the schedules provide hanger rod and seismic brace connection options that meet the same criteria. For systems that require design for over 1.0g, the brace spacing is reduced (Refer to Page A10.6, note 3).

11) Multi-layer piping systems that share support rods must be braced independently from one another or as specifically engineered by the RDP. Layers supporting loads ≤ 10 lbs/ft need not be braced, provided that the load is accounted for in the nearest braced layer. Each section of threaded rod between trapezes and/or the building structure is subject to vertical stiffening requirements.

12) Vertical drops from suspended pipe systems to equipment (or flexible connectors where applicable) may be braced using the transverse and longitudinal braces in this manual. Note: Do not exceed ½ of the maximum brace spacing as measured from the seismic brace to the equipment or flexible connector when bracing vertical drops. (Refer to the Figures on Page A12.2.) If the transverse or longitudinal brace cannot accept the full vertical drop, a seismic floor support designed for the applicable loads is required. Design of this support shall account for seismic relative displacement between floors and may require a flexible connection between the floor support and the first seismic brace location above.

13) Any system which crosses a building separation or seismic joint must be designed to accommodate the seismic relative displacement per ASCE 7, Section 13.3.2, 13.3.2.1, and 13.3.2.2, or as specified by the engineer of record for approval by the enforcement agency.

Notes on Supports:

1) Where the seismic brace system incorporates the use of a threaded vertical hanger rod designed to carry gravity loads only, additional anchorage and/or stiffening may be required as detailed. General support of suspended pipe systems and equipment to carry gravity loads shall be determined by the engineer of record and/or mechanical code requirements. However, hanger rod connection details in this manual may be used as a guide for these supports. ASTM A307 threaded rods may be used in lieu of ASTM A36 threaded rods as called out in this manual. The use of "C-Clamps" designed to attach threaded rod to one side of a steel beam flange shall not be used unless they are provided with a restraining strap or hook to the opposite beam flange, equivalent to those specified in NFPA 13, Section 9.3.7 and approved by OSHPD.

2) Support rod capacity and its anchorage to the structure is an important part of a solid bracing system. Solid braces shall not be attached to existing systems or support rods designed for gravity loads unless they are checked for increased loads.

3) Threaded vertical hanger rods where seismic sway bracing is attached may require stiffening if the length of the rod exceeds the maximum unbraced rod length indicated on the kit installation detail in Sections C and F. However, if the calculated compression on the rod due to combined gravity, the vertical brace component of the bracing system as a result of Fp, and Fpv loads is less than or equal to zero, no rod stiffening is required, regardless of rod length. A vertical rod stiffener using a 1⅝"x1⅝"x12ga strut channel or steel angle cut to the appropriate length and attached to the threaded rod with a minimum of two Mason Ind. N.Y. Type UCC or SRC clamps is required, as detailed in Sections C and F. The contractor may substitute a break-off bolt set to a minimum of 10 ft-lbs (Ref. X3.0). Rod stiffening strut may be solid, slotted or punched. Ref. X7.0 and X7.1 for strut member data.

REVIEWED FOR CODE COMPLIANCE
OPM-0043
DATE: 01/23/2023
FOR CBC BUILDING CODE

MASON WEST
1601 E. Miraloma Ave. Placentia, CA 92870
TEL (714) 630 - 0701, www.masonwest.com

Jiefu "Jeff" Zhang, SE
California SE No. S5270

PAGE
A10.2

PIPING GENERAL NOTES (continued)

4) Trapeze supports shall consist of 12 gauge single or double channel strut, steel angles or tube steel as tabulated in Sections B and T. For gravity only trapeze supports and trapeze supports where transverse seismic braces are installed, the acceptable size of the trapeze member is provided in the same sections. For trapeze supports where longitudinal seismic braces are installed, the acceptable size of the trapeze member is also provided. Trapeze members may be provided with round holes sized for hanger rods. Ref. X7.0 and X7.1 for strut member data. In all cases, for analysis purposes, the following information is required: a) seismic 'g' coefficient, b) pipe weight per foot and c) maximum span between threaded rod supports. The trapezes shall be supported by threaded rods, with nuts and washers as detailed in Section F and with rod stiffeners as required per Note 3.

5) Concrete overstrength factor, Ω_0, is not required for hanger supports designed for gravity only or hanger supports at seismic cable brace locations where seismic forces do not exceed 20% of the total forces.

Notes on Seismic Cable Bracing:

1) Cables shall be prestretched galvanized 7x19 strand core aircraft cable, with no limit to their installed length. Cables meet the following specifications: MIL-DTL-83420M with Amendment 2, Type 1 non-jacketed cable.

2) Cables shall be installed slightly slack, so as not to support gravity loads.

3) Cable shall connect the braced item to a building structural element. Cable shall have at each end a bracket to make the connections. The cable assembly, with connection brackets, shall be Mason Ind. N.Y. SCB or SCBH, refer to pages X1.0 & X1.1. Cable is held to end brackets with one or two bolts. Cable bolts shall be tightened to the torque values stated in the details or, in the case where break off nuts are provided, until the nut breaks off. Break off nuts are as manufactured by Mason West, Inc. (Refer to page X4.0).

4) The Mason Ind. N.Y. SCBH component can be used for connection directly to the threaded vertical hanger rod used for supporting system gravity loads as detailed in Sections C and F.

5) The SCB bracket and cable (Ref. X1.0), SCBH bracket and cable (Ref. X1.1), UCC rod stiffener clamp (Ref. X3.0), and SRC rod stiffener clamp (Ref. X3.1) are manufactured by Mason Ind. N.Y. and are included (with accompanying hardware) in the kit options provided in Sections C and F.

Notes on Seismic Solid (Rigid) Bracing:

1) Solid bracing members shall be 12 gauge channel strut or steel angle. Strut members may be solid, slotted or punched. The details in Sections C and F indicate the minimum solid brace size based on a maximum solid brace length. The charts on pages X2.0, X2.1, and X2.2 tabulate different solid brace member sizes for maximum installed lengths of 5'-0", 9'-6" or 14'-6". Ref. X7.0 and X7.1 for strut member data.

2) Solid brace members shall be connected to both the distribution system and the structure using the seismic solid brace components (Mason Ind. N.Y. Type SSBS, SHB, or SSB. Refer to pages X2.0, X2.1, or X2.2, respectively).

3) The attachment between the solid brace component and the 12 gauge channel strut shall consist of (1) or (2) 1/2" bolt and strut nut connections torqued to 50 ft-lbs or, in the case where break off nuts are provided, until the nut breaks off. Refer to Sections C and F to determine the quantity of bolt/strut nut combinations required. Break off nuts are as manufactured by Mason West, Inc. (Refer to page X4.0).

4) The SSBS bracket (Ref. X2.0), SHB bracket (Ref. X2.1), SSB bracket (Ref. X2.2), UCC rod stiffener clamp (Ref. X3.0), and SRC rod stiffener clamp (Ref. X3.1) are manufactured by Mason Ind. N.Y. and are included (with accompanying hardware) in the kit options provided in Sections C and F.

REVIEWED FOR CODE COMPLIANCE
OPM-0043
BY: William Staehlin
DATE: 01/23/2023
CALIFORNIA BUILDING CODE 2022

MASON WEST
1601 E. Miraloma Ave. Placentia, CA 92870
TEL (714) 630 - 0701, www.masonwest.com

Jiefu "Jeff" Zhang, SE
California SE No. S5270

PAGE
A10.3

PIPING GENERAL NOTES (continued)

Notes on Seismic Brace Attachment to Building Structure:

1) Attachment methods and hardware (connectors) used for seismic bracing attachment to the building structural element is the critical factor in the design of seismic sway-bracing. Lightweight structures may limit the maximum spacing between seismic braces. The structural engineer of record shall determine the maximum allowable seismic loads that may be imposed on the building structure.

2) Attachment to different types of structures are addressed in these guidelines. Attachment types include reinforced normal or sand lightweight concrete (flat slabs, slabs poured in steel decking, walls or columns), fully grouted reinforced concrete masonry, hollow steel decking, steel framing, timber framing, and metal stud wall framing. Attachments may be made with pre- or post-installed concrete anchors, machine bolts, self-drilling and self-tapping screws, lag bolts, nails or in cases of steel on steel connections, by arc-welding. Use of attachment methods not detailed in these guidelines must be engineered on an individual job basis subject to approval by the enforcement agency. Note: The structural engineer of record shall verify that attachment details specified by the RDP are in accordance with the design concept for the primary structure.

3) Expansion anchors shall be Hilti Kwik Bolt TZ2, Powers Power-Stud+ SD1, Mason Ind. N.Y. SAS(E) or Powers Power-Stud+ SD2 for minimum 3000 psi concrete slabs, beams, or walls and concrete filled decks (sand light or normal weight) installed in accordance with ICC Reports ICC ESR 4266, 2818, 3037 or 2502, respectively. Hilti Kwik Bolt TZ2 expansion anchors shall be used to resist static and transient seismic tension and shear loads in uncracked, grout-filled concrete masonry. Expansion anchors designed to ICC-ES AC01 are limited to allowable stress design only in accordance with AC01 1.2. SEOR shall verify that: (1) masonry is not cracked as defined in ICC-ES AC01 Section 2.3; calculation required to show masonry wall would not crack under the design earthquake loads under all service load conditions; wall has to remain elastic; (2) masonry wall shall be fully grouted in accordance with ESR-4561 Section 3.2; (3) condition of use requirements in accordance with ESR-4561 Section 5.0 is satisfied. When expansion anchors are used, 50 percent of alternate bolts in a group shall be tension tested or torque tested per 2013 CBC Section 1913A.7 or 2016/2019/2022 CBC Section 1910A.5. Testing shall be done in the presence of the special inspector and a report of the test results shall be submitted to the enforcement agency. If any anchors fail, test all previously untested anchors installed by the same trade until 20 consecutive anchors pass. Then resume the original test frequency. Refer to page A0.4 or A0.5 for test loads.

4) Concrete inserts shall be Hilti KCM-WF/PD, Dewalt/Powers Wood Knocker/Wood Knocker II+, or Caddy CRLW for installation in normal or sand lightweight concrete slabs or HIlti KCM-MD-SP/LP, Dewalt/Powers Bang-It+ or DDI+, or Caddy CRLM for installation in normal or sand lightweight concrete filled metal decks installed in accordance with applicable ICC Reports ICC ESR 4145, 3657, 3958, or 3864.

5) All welded attachments shall be minimum 70xx electrode welds. Minimum 60xx electrode welds may be used for steel thicknesses that are 12 gauge or less.

6) Metal decks for expansion anchor attachments and inserts shall be minimum 20 gauge with either a maximum 3 inch flute and minimum 1-1/2 inch cover or a maximum 1-1/2 inch flute and minimum 2-1/4 inch cover. Refer to appropriate M2 and N2 pages for allowable deck anchor attachments. Concrete fill shall be minimum 3000 psi sand lightweight concrete. *Note:* Metal decks with minimum 3000 psi stone aggregate concrete fill may use the sand lightweight concrete deck charts.

7) Concrete attachments are based on specified anchor bolts or inserts. Substitution of alternate anchors must be approved by Mason West and the enforcement agency on a job by job basis.

8) When installing drilled-in anchors in existing non-prestressed reinforced concrete, use care and caution to avoid cutting or damaging reinforcing bars. When installing them in existing prestressed concrete, locate the prestressed tendons by using a non-destructive method and do not cut or damage the tendons during installation.

9) Attachments are provided for wide flange structural steel members, open web steel trusses as well as wood trusses, joists and beams in Section N3.11-3.13, N4.10-4.13.

MASON WEST
1601 E. Miraloma Ave. Placentia, CA 92870
TEL (714) 630 - 0701, www.masonwest.com

Jiefu "Jeff" Zhang, SE
California SE No. S5270

PAGE
A10.4

PIPING GENERAL NOTES (continued)

10) Screw anchors shall be Powers Screw-Bolt+/Hangermate+, Mason Ind. N.Y. SAST, or Hilti Kwik HUS-EZ/HUS-EZ I for minimum 3000 psi concrete slabs, beams, or walls and concrete filled decks (sand light or normal weight) installed in accordance with ICC Reports ICC ESR 3889, 2713 or 3027, respectively. Testing shall be done in the presence of the special inspector and a report of the test results shall be submitted to the enforcement agency. If any anchors fail, test all previously untested anchors installed by the same trade until 20 consecutive anchors pass. Then resume the original test frequency. Screw anchors shall not be tested using a torque wrench. Screw anchors may be loosened a maximum of one full turn to facilitate the positioning of a tension test collar. Following the tension test, the anchor shall be re-torqued in accordance with the manufacturer's installation instructions. Refer to page A0.6 or A0.7 for test loads.

Notes on Suspended Piping: (Refer to Page A10.7 for Fire Protection Pipe Brace Requirements)

1) Per 2013/2016 CBC Sections 1616A.1.18 and 1616A.1.26, ASCE 7-10 Sections 13.1.4 and 13.6.8 design of piping systems and attachments for the seismic forces are not required for piping where any of the following are satisfied:
   a) The component is positively attached to structure; and the project is designated as Seismic Design Categories D, E or F*; flexible connections are provided between the distributed system and the component/equipment*; and the distributed system weighs 5 lbs/ft or less; or
   b) Trapeze assemblies are used to support piping whereby no single pipe exceeds the limits set forth in d) below and the total operating weight of the piping supported by trapeze assemblies is less than 10 lbs/ft; or
   c) The piping is supported by hangers and each hanger in the piping run is 12" or less in length from the top of the pipe to the supporting structure. Where pipes are supported on a trapeze, the trapeze shall be supported by hangers having a length of 12" or less from the top of the trapeze member to the supporting structure. Where rod hangers are used with a diameter greater than 3/8", they shall be equipped with swivels, eye bolts or other devices to prevent inelastic bending of the rod; or
   d) Piping with an R_P of 4.5 or greater is used and provisions are made to avoid impact with other structural or nonstructural components or to protect the piping in the event of such impact and the following size requirements are met.
      i. The project is designated a Seismic Design Category of D, E or F*, the value of I_P is greater than 1.0*, and the nominal pipe size is 1" or less; or
      ii. The project is designated a Seismic Design Category of D, E or F*, the value of I_P = 1.0*, and the nominal pipe size is 3" or less.

REVIEWED FOR CODE COMPLIANCE
HCAI
OPM-0043
BY: William Staehlin
DATE: 01/23/2023
CALIFORNIA BUILDING CODE 2022

SUMMARY OF INDIVIDUALLY SUPPORTED PIPING SYSTEMS THAT ARE EXEMPT FROM DESIGN FOR SEISMIC FORCES AND SEISMIC RELATIVE DISPLACEMENTS (PER NOTES 1a and 1d ABOVE)		
Mechanical, Plumbing, Process Pipe and Similar Systems (Rp ≥ 4.5, Refer to Page A10.0, Note 2)		
SYSTEM (e.g.) - Steel or Copper Material	Ip*	EXEMPTIONS
Heating Hot and Chilled Water Condenser Water High Temperature Hot Water Steam and Steam Vent Condensate Return Water Boiler Feed Water and Blowdown Domestic Hot and Cold Water Fuel Oil, Gas and Compressed Air Medical Gases and Vacuum Industrial, Irrigation and Soft Water Emergency Cold Water Grease Waste and Vent Sanitary Waste and Vent	1.0	1. All pipes ≤ 3" diameter. 2. All pipes exempted for the Ip=1.5 case below.
	1.5	1. The following pipes (≤ 5 lbs/ft) where a flexible connection is provided between pipes and components*. a. ≤ 2" diameter vent, gas or empty SCH 40 steel pipe. b. ≤ 1-1/2" diameter SCH 40 steel pipe. c. ≤ 3" diameter vent, gas or empty copper pipe. d. ≤ 2" diameter copper pipe. e. Any other piping with an operating weight ≤ 5 lbs/ft. (Note: Refer to system weights in the appendix. Pipes with hazardous contents (e.g. medical gases, fuel oil, natural gas, etc.) shall be braced regardless of weight. Pipe size exemption 2 below still applies. Non-hazardous contents include, but are not limited to, medical vacuum and compressed air.) 2. All other pipes ≤ 1" diameter.

*** Refer to A10.6 for continuation of table and notes on Seismic Design Category, Ip and flexible connection.**

MASON WEST
1601 E. Miraloma Ave. Placentia, CA 92870
TEL (714) 630 - 0701, www.masonwest.com

Jiefu "Jeff" Zhang, SE
California SE No. S5270

PAGE
A10.5

PIPING GENERAL NOTES FOR 2019/2022 CBC (continued)

10) Screw anchors shall be Powers Screw-Bolt+/Hangermate+, Mason Ind. N.Y. SAST, or Hilti Kwik HUS-EZ/HUS-EZ I for minimum 3000 psi concrete slabs, beams, or walls and concrete filled decks (sand light or normal weight) installed in accordance with ICC Reports ICC ESR 3889, 2713 or 3027, respectively. Testing shall be done in the presence of the special inspector and a report of the test results shall be submitted to the enforcement agency. If any anchors fail, test all previously untested anchors installed by the same trade until 20 consecutive anchors pass. Then resume the original test frequency. Screw anchors shall not be tested using a torque wrench. Screw anchors may be loosened a maximum of one full turn to facilitate the positioning of a tension test collar. Following the tension test, the anchor shall be re-torqued in accordance with the manufacturer's installation instructions. Refer to page A0.6 or A0.7 for test loads.

Notes on Suspended Piping: (Refer to Page A10.8 for Fire Protection Pipe Brace Requirements)

1) Per 2019/2022 CBC Sections 1601A.1.4 & 1617A.1.18 applicable only to OSHPD-1,2,4,5 and 1R designated projects, distributed piping systems weighing 5 lbs/ft or less are exempt from design for the seismic forces of ASCE 7-16 Section 13.3. For remaining piping systems, per 2019/2022 CBC Section 1617A1.26, design for the seismic forces and relative displacements shall not be required for piping systems where flexible connections or other assemblies are provided to accommodate the relative displacement between component and piping, where the piping system is positively attached to the structure, and where any of the following apply:
   a) Trapeze assemblies are supported by ⅜" or ½" diameter rod hangers not exceeding 12" in length from the pipe support point to the connection at the supporting structure, do not support piping with Ip greater than 1.0, and no single pipe exceeds the diameter limits set forth in item b.ii below or 2" for Seismic Design Category D, E, or F where Ip is greater than 1.0 and the total weight supported by any single trapeze is 100 lbs or less; or
   b) Piping that has an Rp of 4.5 or greater is either supported by rod hangers and provisions are made to avoid impact with other structural or nonstructural components or to protect the piping in the event of such impact, **or** pipes with Ip = 1.0 supported by individual rod hangers ⅜" or ½" in diameter, where each hanger in the pipe run is 12" or less in length from the pipe support point to the connection at the supporting structure; and the total weight supported by any single hanger is 50 pounds or less. In addition, the following limitations on the size of piping shall be observed:
      i. In structures assigned to Seismic Design Category D, E, or F where Ip is greater than 1.0, the nominal pipe size shall be 1" or less.
      ii. In structures assigned to Seismic Design Category D, E, or F where Ip = 1.0, the nominal pipe size shall be 3" or less.
   c) Pneumatic tube systems supported with trapeze assemblies using ⅜" diameter rod hangers not exceeding 12" in length from the tube support point to the connection at the supporting structure and the total weight supported by any single trapeze is 100 lbs or less.
   d) Pneumatic tube systems supported by individual rod hangers ⅜" or ½" in diameter, and each hanger in the run is 12" or less in length from the tube support point to the connection at the supporting structure, and the total weight supported by any single rod is 50 lbs or less.

2) Flexible connections in piping required in Note 1 above are not required where pipe is rigidly attached to the same floor or wall that provides vertical and lateral support for the equipment, or to a fixture. Flexible connections in piping are required at seismic separation joints and shall be detailed to accommodate the seismic relative displacements at connections.

REVIEWED FOR CODE COMPLIANCE
HCAI
OPM-0043
BY: William Staehlin
DATE: 01/23/2023
CALIFORNIA BUILDING CODE, 2022

MASON WEST
1601 E. Miraloma Ave. Placentia, CA 92870
TEL (714) 630 - 0701, www.masonwest.com

Jiefu "Jeff" Zhang, SE
California SE No. S5270

PIPING GENERAL NOTES (continued)

Plumbing Pipe Gravity, Waste, Vent and Similar Systems (Rp < 4.5, Refer to Page A10.0, Note 2)		
SYSTEM (e.g.) - Non-Ductile Cast Iron Material	Ip*	EXEMPTIONS
Sanitary Waste Vent Storm and Overflow Drain Grease Waste Vent	1.0 or 1.5	1. The following pipes where a flexible connection is provided between the pipes and components*. a. No-Hub cast iron vent pipes ≤ 3" diameter. b. No-Hub cast iron pipes ≤ 2" diameter. c. Any other piping with an operating weight ≤ 5 lbs/ft.

* Notes:
1) Seismic Design Category and I_P can be found in the general notes of the contract structural drawings for a specific project under Design Criteria. Piping not detailed to accommodate the seismic relative displacement at connections to other components shall be provided with connections having sufficient flexibility to avoid failure of the connection between the components.
2) Flexible connections are not required in cases where pipe is rigidly attached to the same floor or wall that provides vertical and lateral support for the equipment as there is no relative motion between pipe and equipment.
3) Flexible connections are required at seismic separation joints.

2) Section A13 of these guidelines details the "12 Inch Rule" exception described in Note 1.c for Suspended Piping.

3) Steel and copper pipe shall be braced at the spacings tabulated in Section S. Brace spacings vary based on the value of Ip, pipe material, service (water filled or vapor) and pipe connection method. Longitudinal brace spacings shall not exceed 3 times the tabulated transverse brace spacings. For cases where multiple pipes with varying brace spacings are supported on a trapeze, the smallest brace spacing shall govern. The seismic design engineer may design brace spacings for trapezed pipe based on combined pipe sections and/or by adding steel strengthening sections on a job by job basis subject to approval by the enforcement agency.

4) Cast iron pipe (no-hub pipe) brace spacings shall not exceed the spacings tabulated in Section S. No-hub couplings shall be manufactured in accordance with ASTM C1540, shall be certified in accordance with FM 1680 Class 1 and gravity hangers shall be spaced per the requirements of Table 313.1 of the 2013 California Plumbing Code (CPC 2013) for no-hub cast iron pipe.

Exception: Cast iron (no-hub) pipe joined by couplings not satisfying ASTM C1540 or not certified in accordance with FM 1680 Class 1 shall be designed on a project by project basis, and shall require project specific OSHPD approval.

5) Rigid grooved coupling listed for UL Standard 213 shall be permitted in horizontal run of pipe. Flexible grooved coupling listed for UL Standard 213 shall be permitted in vertical risers (to accommodate drift) and other locations (e.g. seismic separation, equipment nozzle, etc.) to accommodate small movement and/or rotation. Non-UL listed groove couplings shall not be used unless approved on project specific basis.

6) Seismic restraints for individually supported pipes shall be attached directly to the pipe using a Mason West, Inc. Type WPL, welded pipe lug (Refer to page X8.4) for standard schedule or larger steel pipe or a Mason West, Inc. Type SPC seismic pipe clamp (Refer to page X8.3) for steel and cast iron pipe utilizing details in Section C. In addition, a Mason West, Inc. Type SSC strut steel clamp (Refer to page X8.0) for steel pipe or Type SCC strut copper clamp (Refer to page X8.1) or Type SCCI strut copper clamp with insulation (Refer to pages X8.6 - X8.6.3) for copper pipe may be used utilizing detail pages A18.0 - A18.2.

REVIEWED FOR CODE COMPLIANCE
OPM-0043
BY: William Staehlin
DATE: 01/23/2023
CALIFORNIA BUILDING CODE 2013

MASON WEST
1601 E. Miraloma Ave. Placentia, CA 92870
TEL (714) 630 - 0701, www.masonwest.com

Jiefu "Jeff" Zhang, SE
California SE No. S5270

PIPING GENERAL NOTES FOR 2019/2022 CBC (continued)

SUMMARY OF PIPING SYSTEMS THAT ARE EXEMPT FROM DESIGN FOR SEISMIC FORCES AND SEISMIC RELATIVE DISPLACEMENTS (PER PAGE A10.5a, NOTE 1)
The following pipes (≤ 5 lbs/ft) without hazardous contents are exempt from seismic design: a. ≤ 2" diameter vent, gas or empty SCH 40 steel pipe. b. ≤ 1-1/2" diameter SCH 40 steel pipe. c. ≤ 3" diameter vent, gas or empty copper pipe. d. ≤ 2" diameter copper pipe. e. No-Hub cast iron vent and storm drain pipes ≤ 3" diameter. f. No-Hub cast iron waste pipes ≤ 2" diameter. g. Any other piping with an operating weight ≤ 5 lbs/ft. h. Trapezed piping with combined operating weight ≤ 5 lbs/ft. Notes: 1. Refer to system weights in the appendix 2. Hazardous - Including, but not limited to, medical gases, fuel oil, natural gas. 3. Non-hazardous - Including, but not limited to, medical vacuum, compressed air, water.

3) Steel and copper pipe shall be braced at the spacings tabulated in Section S. Brace spacings vary based on the value of Ip, pipe material, service (water filled or vapor) and pipe connection method. Longitudinal brace spacings shall not exceed 3 times the tabulated transverse brace spacings. For cases where multiple pipes with varying brace spacings are supported on a trapeze, the smallest brace spacing shall govern. The seismic design engineer may design brace spacings for trapezed pipe based on combined pipe sections and/or by adding steel strengthening sections on a job by job basis subject to approval by the enforcement agency.

4) Cast iron pipe (no-hub pipe) brace spacings shall not exceed the spacings tabulated in Section S. No-hub couplings shall be manufactured in accordance with ASTM C1540, shall be certified in accordance with FM 1680 Class 1 and gravity hangers shall be spaced per the requirements of Table 313.3 of the 2019/2022 California Plumbing Code (CPC 2019/2022) for no-hub cast iron pipe.

   Exception: Cast iron (no-hub) pipe joined by couplings not satisfying ASTM C1540 or not certified in accordance with FM 1680 Class 1 shall be designed on a project by project basis, and shall require project specific OSHPD approval.

5) Rigid grooved coupling listed for UL Standard 213 shall be permitted in horizontal run of pipe. Flexible grooved coupling listed for UL Standard 213 shall be permitted in vertical risers (to accommodate drift) and other locations (e.g. seismic separation, equipment nozzle, etc.) to accommodate small movement and/or rotation. Non-UL listed groove couplings shall not be used unless approved on project specific basis.

6) Seismic restraints for individually supported pipes shall be attached directly to the pipe using a Mason West, Inc. Type WPL, welded pipe lug (Refer to page X8.4) for standard schedule or larger steel pipe or a Mason West, Inc. Type SPC seismic pipe clamp (Refer to page X8.3) for steel and cast iron pipe utilizing details in Section C. In addition, a Mason West, Inc. Type SSC strut steel clamp (Refer to page X8.0) for steel pipe or Type SCC strut copper clamp (Refer to page X8.1) or Type SCCI strut copper clamp with insulation (Refer to pages X8.6 - X8.6.3) for copper pipe may be used utilizing detail pages A18.0 - A18.2.

REVIEWED FOR CODE COMPLIANCE
HCAI
OPM-0043
BY: William Staehlin
DATE: 01/23/2023
CALIFORNIA BUILDING CODE, 2022

MASON WEST
1601 E. Miraloma Ave. Placentia, CA 92870
TEL (714) 630 - 0701, www.masonwest.com

Jiefu "Jeff" Zhang, SE
California SE No. S5270

PAGE
A10.6a

PIPING GENERAL NOTES (continued)

7) Seismic restraints for trapeze supported pipe shall be attached to the trapeze member at the hanger locations as detailed in Section F. Pipes supported by trapezes at seismic brace locations shall utilize Mason West, Inc. Type SSC, strut steel clamp (Refer to page X8.0) for steel pipe or Type SCC, strut copper clamp (Refer to page X8.1) for copper pipe utilizing details in Section F.

8) The pipe weights tabulated in Section B1 are based on schedule 40 steel pipe for up to 12" diameter, schedule 30 steel pipe for 14" to 18" diameter and schedule 20 for 20" and 24" diameters. Total weights include water and insulation. Verify the maximum weight per foot listed in the column next to pipe size when determining seismic brace requirements tabulated in Section B1. The appendix of these guidelines tabulates the weight per foot for steel, copper, PVC, PVDF and cast iron pipe.

9) If a 2 piece rod is used to support piping, minimum engagement of the rod in the coupling nut shall be equal to the rod diameter. Rods shall be run up tight in the coupling nut.

10) For vertical support methods at seismic brace locations other than what are detailed in this manual, the seismic design engineer must provide calculations and/or testing of any additional components or materials (e.g. hangers, clamps, etc.) to comply with the CBC on a job by job basis subject to review and approval by the enforcement agency.

Notes on Vertical Risers:

1) Vertical piping systems supported at each floor shall be considered seismically braced if the penetration through each floor is tightly packed with approved firestops, satisfying NFPA 13-13 Section 9.3.5.8.5 and the floor to floor spacing does not exceed the maximum brace spacing tabulated in Section S. Tops of risers exceeding 3 feet shall be provided with a 4-way brace. Where the 4-way brace is attached to the horizontal piping, it shall be installed within 2 feet of the centerline of the riser.

2) Vertical pipe risers in an open shaft must be attached to steel supports with both steel supports and connections sized to accept the combined gravity and seismic loads. Thermal loads shall be considered, where applicable. Lateral seismic restraint spacing shall not exceed the spacings tabulated in Section S. Supports and connections must be engineered on a job by job basis subject to approval by the enforcement agency. Seismic relative displacement between floors shall be considered in the design.

3) Vertical pipe risers subject to thermal expansion or contraction may be engineered to allow pipe movement and reduce load transfer between floors. Sliding guides and/or resilient anchors shall be employed to allow or control thermal movement while designed to accept seismic loads at maximum spacings tabulated in Section S. Pipe penetrating cored holes at floor levels that are tightly packed may be considered as pipe guides. Where insulated pipes penetrate cored holes used as guides, a hard insulation insert that exceeds the floor depth at each end is required. Riser clamps or brackets shall be designed to transfer resultant horizontal and vertical loads from the pipe to the supports. Supports and connections must be engineered on a job by job basis subject to approval by the enforcement agency.

4) A pipe penetrating a floor with the annular space packed with firestop may act as an all-directional brace at the end of a horizontal pipe run as described in Note 1 above and depicted on Page A14.0 if the distance from the centerline of the floor to the top of the horizontal pipe is less than 'A', where 'A' is a function of the maximum transverse brace spacing, 'S', as defined on Page A12.1. A pipe connecting to a floor or roof drain poured into or directly connected to the floor or roof may also act as an all-directional brace if the distance from the bottom of the drain to the top of the horizontal pipe is less than 'A'.

REVIEWED FOR CODE COMPLIANCE
OPM-0043
BY William Staehlin
DATE 01/23/2023
ALTERNATE BUILDING CODE

MASON WEST
1601 E. Miraloma Ave. Placentia, CA 92870
TEL (714) 630 - 0701, www.masonwest.com

Jiefu "Jeff" Zhang, SE
California SE No. S5270

PAGE
A10.7

PIPING GENERAL NOTES (continued)

Notes on Fire Protection (or Sprinkler) Pipes:

1) Per NFPA 13 Standard for the Installation of Sprinkler Systems, 2016 Edition, seismic bracing is required for the following systems (Note: Ip = 1.5 for all Fire Protection Piping per ASCE7-16 Section 13.1.3, Note 1):
   a) In Seismic Design Categories C, D, E or F:
      i. All mains.
      ii. All cross mains.
      iii. All branch lines 2-1/2" diameter nominal pipe size and larger
      iv. The last length of pipe at the end of a feed or cross main.

      Exception: Transverse seismic bracing shall not be required for pipes supported by individual hangers where each hanger in the pipe run is 6" or less in length from the top of the pipe to the supporting structure.

2) The maximum distance between hangers shall not exceed that specified in NFPA 13 Table 9.2.2.1(a) except where the provisions of NFPA 13 Section 9.2.4 apply.

3) Refer to Page A10.1 notes 2, 3, 4, 5, 6 and 7 for transverse and longitudinal brace discussion.

4) Maximum transverse brace spacings shall not exceed 40 feet for ductile steel pipe 2½" diameter and larger and 30 feet for ductile steel pipe 2" diameter and smaller. The Zone of Influence (ZOI) Method in NFPA 13, Annex E shall be addressed when determining maximum transverse brace spacing. The distance between the last brace and the end of the pipe shall not exceed 6 feet.

5) Maximum longitudinal brace spacings shall not exceed 80 feet for ductile steel pipe 2½" diameter and larger and 60 feet for ductile steel pipe 2" diameter and smaller. The distance between the last brace and the end of the pipe shall not exceed 40 feet.

6) Transverse braces may act as longitudinal braces if they are installed within 24" of the centerline of the piping being braced longitudinally and the lateral brace is on a pipe of equal or greater size than the pipe being braced longitudinally. Similarly, longitudinal braces may act as transverse braces if they are installed within 24" of the centerline of the piping being braced transversely.

7) Each run of pipe between changes in direction shall be provided with both lateral and longitudinal braces. However, it is permissible to brace a straight pipe run of less than 12 feet using the braces on the adjacent runs of pipe.

8) Refer to Page A10.6 (or Page A10.6a for 2019 CBC), note 5 for pipes with grooved couplings. Where flexible couplings are installed on mains other than as required in NFPA 13 Section 9.3.2, a transverse brace shall be provided within 24" of every other coupling, including flexible grooved couplings, but not more than 40 feet on center.

9) Tops of vertical offsets or risers exceeding 3 feet shall be provided with a 4-way brace. Where the 4-way brace is attached to the horizontal piping, it shall be installed within 2 feet of the centerline of the riser. The maximum distance between 4-way braces on a riser shall not exceed 25 feet.

10) Restraint of branch lines is considered a lesser degree of resisting loads than bracing and shall be provided as required in NFPA 13 Section 9.3.6.

REVIEWED FOR CODE COMPLIANCE
OPM-0043
BY: William Staehlin
DATE: 01/23/2023
CALIFORNIA BUILDING CODE 2022

MASON WEST
1601 E. Miraloma Ave. Placentia, CA 92870
TEL (714) 630 - 0701, www.masonwest.com

Jiefu "Jeff" Zhang, SE
California SE No. S5270

PAGE
A10.8

PIPING DESIGN PROCEDURE

Follow the five steps below to determine the seismic kit installation, hanger and brace connection details that pertain to a specific suspended piping system. An example is provided on the following pages.

Step 1. **Determine 'g' Forces:**
Calculate the lateral acceleration, F_P, and vertical acceleration, F_{PV}, in terms of 'g' using the equations outlined on page A10.0 for each level of the building.

Step 2. **Determine Operating Weight (lbs/ft or lbs):**
Determine the operating weight, W_P, of the distribution system (lbs/ft) or component (lbs) to be seismically braced. Refer to the appendix for pipe weights.

Step 3. **Determine Seismic Forces (lbs):**
Determine the maximum allowable brace spacings from page A10.6 and Section S. *If you choose to use the pre-designed schedules in Section B, skip the remainder of this step.*
Calculate the maximum lateral and vertical forces applied to the seismic brace system. Resolve the maximum lateral force to the brace, F_P, and maximum load on the hanger rod, T_{Rod}.

For trapeze supported piping, determine the maximum allowable brace spacing from page A10.6, Section S and Section X8. *If you choose to use the pre-designed schedules in Section B, skip the remainder of this step.*
Calculate the maximum lateral and vertical forces applied to the seismic brace system. Resolve the maximum lateral force to the brace, F_P, and maximum load on the hanger rod, T_{Rod}.

The resultant compression load on the hanger rod at seismic brace locations may be calculated to determine if rod stiffening is required.

Check trapeze seismic attachment to pipe. Use tables in Section S3 to check the capacities of the strut clamps to strut trapezes or details in Section A16 for additional options.

Step 4. **Select Seismic Kit Installation, Hanger and Brace connection Details:** Select the appropriate details from the schedules in Section B for single hung pipe or pipe on trapeze based on maximum 'g' force, system weight per foot or pipe size and maximum transverse, longitudinal and all directional brace spacing.

If you calculated the seismic forces in step 3, verify the details selected are correct by comparing the calculated lateral force, F_P, and load on the hanger rod, T_{Rod}, with the rated loads tabulated on the detail sheets. If F_P and T_{Rod} are less than or equal to the tabulated rated loads, the details are acceptable.

Step 5. **Select Trapeze Member (where applicable):**
Select the trapeze member from the tables in Section B or T for transverse, longitudinal and all-directional seismic braces based on 'g' force and maximum span of trapeze member.

REVIEWED FOR CODE COMPLIANCE
HCAI
OPM-0043
BY: William Staehlin
DATE: 01/23/2023
CALIFORNIA BUILDING CODE, 2022

MASON WEST
1601 E. Miraloma Ave. Placentia, CA 92870
TEL (714) 630 - 0701, www.masonwest.com

Jiefu "Jeff" Zhang, SE
California SE No. S5270

PAGE
A11.0

PIPING DESIGN PROCEDURE (continued)

Example:

4"Ø standard steel pipe is suspended within a 3 story poured-in place concrete building with basement. The pipe is supported at every 10 feet. The elevation of each floor, including the basement, is 15 feet. The short period spectral acceleration, S_{DS}, listed on the contract structural drawings, is 1.02. The component importance factor, I_P = 1.5. (For trapeze supported pipe example, refer to page A11.4).

Note: When anchoring to concrete, allowable loads have been reduced by the concrete overstrength factor, Ωo, where applicable, in Sections M & N. Therefore, Ωo is not used when calculating applied seismic forces in this example.

Step 1. **Determine 'g' Forces**

Component amplification and response modification factors for steel mechanical pipe are as follows:

$a_P = 2.5$; $R_P = 6.0$

Therefore,

$$F_P = (0.7)\frac{0.4(2.5)(1.02)W_P}{(6.0)/(1.5)}(1+2\frac{z}{h}) = 0.18(1+2\frac{z}{h})W_P$$

$$F_{P(min)} = (0.7)(0.3)(1.02)(1.5)W_P = 0.32W_P$$

$$F_{P(max)} = (0.7)(1.6)(1.02)(1.5)W_P = 1.71W_P$$

$$F_{PV} = (0.7)(0.2)(1.02)W_P = 0.14W_P$$

Tabulated below are the 'g' forces for each level of the building

Floor Level	F_P	F_{PV}
Basement	0.32g	0.14g
1	0.32g	0.14g
2	0.42g	0.14g
3	0.54g	0.14g

Step 2. **Determine Operating Weight (lbs/ft):**

From page APP2.1, the operating weight of a 4"Ø steel pipe with water and insulation is 18.3 lbs/ft.

REVIEWED FOR CODE COMPLIANCE
HCAi
OPM-0043
BY: William Staehlin
DATE: 01/23/2023
CALIFORNIA BUILDING CODE, 2022

MASON WEST
1601 E. Miraloma Ave. Placentia, CA 92870
TEL (714) 630 - 0701, www.masonwest.com

Jiefu "Jeff" Zhang, SE
California SE No. S5270

PAGE
A11.1

PIPING DESIGN PROCEDURE (continued)

Step 3. **Determine Seismic Forces (lbs):**

From page S1.0, the maximum transverse brace spacing for suspended steel pipe is 53 feet for Basement Level and Level 1, 50 feet for Level 2 and 47 feet for Level 3. However, due to seismic brace capacity limits, we will use 30 feet as the maximum brace spacing for this example. Maximum longitudinal brace spacing shall not exceed 3 times the transverse brace spacing. For this example, we will limit the longitudinal brace spacing to 60 feet.

Note: At this point, you have the option to calculate the seismic forces and loads on the hanger rods and complete this step or move on to step 4.

For Basement Level and Level 1,

F_P(Transverse) = 0.32 x 18.3 lbs/ft x 30 ft brace spacing = 176 lbs
F_P(Longitudinal) = 0.32 x 18.3 lbs/ft x 60 ft brace spacing = 351 lbs
F_{PV} = 0.14 x 18.3 lbs/ft x 10 ft support spacing = 26 lbs

Note: Fp does not need to be increased due to installation tolerances indicated in assembly details.

For seismic solid brace installations:

T_{Rod}(Transverse) = F_P(Transverse) tan (brace angle) + (18.3 lbs/ft x 10 ft + F_{PV}) = 385 lbs.

T_{Rod}(Longitudinal) = F_P(Longitudinal) tan (brace angle) + (18.3 lbs/ft x 10 ft + F_{PV}) = 560 lbs.

Note: Brace angle = 45 degrees for this example.

For seismic cable brace installations:

T_{Rod} = (18.3 lbs/ft x 10 ft + F_{PV}) = 209 lbs.

Note: In the case of piping on trapeze, for seismic solid and cable brace T_{Rod} calculations, 2/3 of the total gravity load is assumed as the worst case on each hanger. If this is not the case, make the necessary adjustment.

Similarly for Levels 2 and 3, F_P, F_{PV} and T_{Rod} are as tabulated below.

Floor Level	F_P (Transverse)	F_P (Longitudinal)	F_{PV}	T_{Rod}(Solid -Tran)	T_{Rod}(Solid-Long)	T_{Rod}(Cable)
Basement	176 lbs	351 lbs	26 lbs	385 lbs	560 lbs	209 lbs
1	176 lbs	351 lbs	26 lbs	385 lbs	560 lbs	209 lbs
2	231 lbs	461 lbs	26 lbs	440 lbs	670 lbs	209 lbs
3	296 lbs	593 lbs	26 lbs	505 lbs	802 lbs	209 lbs

C_{Rod} = $F_P$tan (brace angle) + F_{PV} - 0.9Wp
= 351 lbs x tan (45 degrees) + 26 lbs - 0.9 x (18.3 lbs/ft x 10 ft) = 212 lbs.

Note: If $C_{Rod} \leq 0$, rod stiffeners are not required.

REVIEWED FOR CODE COMPLIANCE
HCAI
OPM-0043
BY: William Staehlin
DATE: 01/23/2023
CALIFORNIA BUILDING CODE, 2022

MASON WEST
1601 E. Miraloma Ave. Placentia, CA 92870
TEL (714) 630 - 0701, www.masonwest.com

Jiefu "Jeff" Zhang, SE
California SE No. S5270

PIPING DESIGN PROCEDURE (continued)

Step 4. **Select Seismic Kit Installation, Hanger and Brace connection Details:**

For 4" standard steel pipe with operating weight of 18.3 lbs/ft, acceptable seismic kit installation, hanger and connection details from the charts in Section B for each level of the building are as tabulated below.

Seismic Solid (Rigid) Brace, Hanger and Brace connection Details

Floor Level	Fp	Section B Page	Tran/Long Spacing	Kit Installation Details			Trans. Hanger Conn. Desig.	Long. Hanger Conn. Desig.	All Dir. Hanger Conn. Desig.	Trans. Brace Conn. Desig.	Long./ All Dir. Brace Conn. Desig.
				Transverse	Longitudinal	All-Directional					
Basement	0.32g	B1.1	30'/60'	C1.30	C1.32	C1.34	63H	63K	63L	63E	63G
1	0.32g	B1.1	30'/60'	C1.30	C1.32	C1.34	63H	63K	63L	63E	63G
2	0.42g	B1.1	30'/60'	C1.30	C1.32	C1.34	63H	63K	63L	63E	63G
3	0.54g	B1.2	30'/30'	C1.30	C1.32	C1.34	63K	63K	63L	63G	63G

Seismic Cable (Standard) Brace, Hanger and Brace connection Details

Floor Level	Fp	Section B Page	Tran/Long Spacing	Kit Installation Details			Hanger Conn. Desig.	Trans. Brace Conn. Desig.	Long./ All Dir. Brace Conn. Desig.
				Transverse	Longitudinal	All-Directional			
Basement	0.32g	B1.4	30'/60'	C2.30	C2.41	C2.42	63F	50E	63G
1	0.32g	B1.4	30'/60'	C2.30	C2.41	C2.42	63F	50E	63G
2	0.42g	B1.4	30'/60'	C2.30	C2.41	C2.42	63F	50E	63G
3	0.54g	B1.5	30'/30'	C2.40	C2.41	C2.42	75F	63G	63G

For calculated F_P and T_{Rod} select the appropriate details in Sections C, M and N by comparing the calculated values with the tabulated values indicated on each detail.

REVIEWED FOR CODE COMPLIANCE
HCAI
OPM-0043
BY: William Staehlin
DATE: 01/23/2023
CALIFORNIA BUILDING CODE, 2022

MASON WEST
1601 E. Miraloma Ave. Placentia, CA 92870
TEL (714) 630 - 0701, www.masonwest.com

Jiefu "Jeff" Zhang, SE
California SE No. S5270

PAGE
A11.3

PIPING DESIGN PROCEDURE (continued)

Example:

(4) 1¼" and (4) 1½" type K drawn copper gas pipes with (4) 2" type L copper water pipes are suspended within a 3 story poured-in place concrete building with basement. The piping is supported at every 8 feet. The elevation of each floor, including the basement, is 15 feet. The short period spectral acceleration, S_{DS}, listed on the contract structural drawings, is 1.02. The component importance factor, $I_P = 1.5$.

Note: When anchoring to concrete, allowable loads have been reduced by the concrete overstrength factor, Ωo, where applicable, in Sections M & N. Therefore, Ωo is not used when calculating applied seismic forces in this example.

Step 1. **Determine 'g' Forces**

Component amplification and response modification factors for suspended copper pipes are as follows:

$a_P = 2.5$; $R_P = 6.0$

Therefore,

$$F_P = (0.7)\frac{0.4(2.5)(1.02)W_P}{(6.0)/(1.5)}(1+2\frac{Z}{h}) = 0.18(1+2\frac{Z}{h})W_P$$

$$F_{P(min)} = (0.7)(0.3)(1.02)(1.5)W_P = 0.32W_P$$

$$F_{P(max)} = (0.7)(1.6)(1.02)(1.5)W_P = 1.71W_P$$

$$F_{PV} = (0.7)(0.2)(1.02)W_P = 0.14W_P$$

Tabulated below are the 'g' forces for each level of the building

Floor Level	F_P	F_{PV}
Basement	0.32g	0.14g
1	0.32g	0.14g
2	0.42g	0.14g
3	0.54g	0.14g

Step 2. **Determine Operating Weight (lbs/ft):**

From page APP2.0, the operating weight of (4) 1¼" (1.04 lbs/ft), (4) 1½" (1.36 lbs/ft) type K copper gas pipes and (4) 2" type L copper water pipes (4.2 lbs/ft) is about 27 lbs/ft.

REVIEWED FOR CODE COMPLIANCE
HCAi
OPM-0043
BY: William Staehlin
DATE: 01/23/2023
CALIFORNIA BUILDING CODE, 2022

MASON WEST
1601 E. Miraloma Ave. Placentia, CA 92870
TEL (714) 630 - 0701, www.masonwest.com

Jiefu "Jeff" Zhang, SE
California SE No. S5270

PAGE
A11.4

PIPING DESIGN PROCEDURE (continued)

Step 3. **Determine Seismic Forces (lbs):**

From page A10.6 Note 3, the maximum transverse and longitudinal brace spacing for suspended type K and type L copper piping is specified in Section S (Page S1.2.1). The maximum transverse brace spacing is governed by the lowest brace spacing, in this case, 2" type L drawn copper pipe with water. For Basement Level and Level 1 F_P of 0.32g, the 0.375g column lists 25 feet, for Level 2 F_P of 0.42g, the 0.5g column lists 22 feet, and for Level 3 F_P of 0.54g, the 0.625g column lists 20 feet. For this example, we will use 20 feet as the maximum transverse brace spacing for all levels. Per note 3 on page S1.2.1, the maximum longitudinal brace spacing may be 3 times the transverse brace spacing, or 60 feet. We will limit it to 40 feet for this example.

Note: At this point, you have the option to calculate the seismic forces and loads on the hanger rods and complete this step or move on to step 4.

For Basement Level and Level 1,

F_P (Transverse) = 0.32 x 27.0 lbs/ft x 20 ft brace spacing = 173 lbs
F_P (Longitudinal) = 0.32 x 27.0 lbs/ft x 40 ft brace spacing = 346 lbs
F_{PV} = 0.14 x 27.0 lbs/ft x 8 ft support spacing = 30 lbs

Note: Fp does not need to be increased due to installation tolerances indicated in assembly details.

For seismic solid brace installations:

$T_{Rod} = F_P \tan(\text{brace angle}) + (27.0 \text{ lbs/ft} \times 8 \text{ ft} + F_{PV})*(2/3) = 337$ lbs.

Note: Brace angle = 45 degrees for this example. Longitudinal loads considered split evenly to each rod.

For seismic cable brace installations:

$T_{Rod} = (27.0 \text{ lbs/ft} \times 8 \text{ ft} + F_{PV})*(2/3) = 164$ lbs.

Note: In the case of pipes on trapeze, for seismic solid and cable brace T_{Rod} calculations, 2/3 of the total gravity load is assumed as the worst case on each hanger. If this is not the case, make the necessary adjustment.

Similarly for Levels 2 and 3, F_P, F_{PV} and T_{Rod} are as tabulated below.

Floor Level	F_P	F_{PV}	T_{ROD}(Solid)	T_{ROD}(Cable)
Basement	173 lbs	30 lbs	337 lbs	164 lbs
1	173 lbs	30 lbs	337 lbs	164 lbs
2	227 lbs	30 lbs	391 lbs	164 lbs
3	292 lbs	30 lbs	456 lbs	164 lbs

$C_{Rod} = F_P \tan(\text{brace angle}) + F_{PV} - 0.9Wp$
$= 173 \text{ lbs} \times \tan(45 \text{ degrees}) + (2/3)*30 \text{ lbs} - 0.9 \times (2/3)*(27.0 \text{ lbs/ft} \times 8 \text{ ft}) = 63$ lbs.

Note: If $C_{Rod} \leq 0$, rod stiffeners are not required.

Check the seismic clamps, MW-SCC-13 (for 1¼" copper), MW-SCC-15 (for 1½" copper) and MW-SCC-20 (for 2" copper) for 20 feet transverse spacing and 40 feet longitudinal brace spacing on sheet S3.1 for Type L drawn and sheet S3.2 for Type K drawn. All brace spacings in charts meet or exceed the necessary brace spacings.

REVIEWED FOR CODE COMPLIANCE
HCAi
OPM-0043
BY: William Staehlin
DATE: 1/23/2023
CALIFORNIA BUILDING CODE, 2022

MASON WEST
1601 E. Miraloma Ave. Placentia, CA 92870
TEL (714) 630 - 0701, www.masonwest.com

Jiefu "Jeff" Zhang, SE
California SE No. S5270

PAGE
A11.5

PIPING DESIGN PROCEDURE (continued)

Step 4. **Select Seismic Kit Installation, Hanger and Brace connection Details:**

For a set of pipes with operating weight of 27.0 lbs/ft, acceptable seismic kit installation, hanger and connection details from the charts in Section B for each level of the building are as tabulated below.

Seismic Solid (Rigid) Brace, Hanger and Brace connection Details

Floor Level	Fp	Section B Page	Tran/Long Spacing	Kit Installation Details			Trans./ Long. Hanger Conn. Desig.	All Dir. Hanger Conn. Desig.	Brace Conn. Desig.
				Transverse	Longitudinal	All-Directional			
Basement	0.32g	B1.13	20'/40'	F1.10	F1.11	F1.12	38G	38L	50E
1	0.32g	B1.13	20'/40'	F1.10	F1.11	F1.12	38G	38L	50E
2	0.42g	B1.13	20'/40'	F1.10	F1.11	F1.12	38G	38L	50E
3	0.54g	B1.14	15'/30'	F1.20	F1.21	F1.22	50J	50M	50G

Seismic Cable (Standard) Brace, Hanger and Brace connection Details

Floor Level	Fp	Section B Page	Tran/Long Spacing	Kit Installation Details			Hanger Conn. Desig.	Brace Conn. Desig.
				Transverse	Longitudinal	All-Directional		
Basement	0.32g	B1.16	20'/40'	F2.20	F2.21	F2.22	50E	50E
1	0.32g	B1.16	20'/40'	F2.20	F2.21	F2.22	50E	50E
2	0.42g	B1.16	20'/40'	F2.20	F2.21	F2.22	50E	50E
3	0.54g	B1.17	15'/30'	F2.20	F2.21	F2.22	50E	50G

For calculated F_P and T_{ROD} select the appropriate details in Section F, M and N by comparing the calculated values with the tabulated values indicated on each detail.

Step 5. **Select Trapeze Member (where applicable):**

For a set of pipes on trapeze weighing 27.0 lbs/ft supported by a trapeze member with a maximum span between hanger rods of 48 in. and the seismic accelerations calculated in step 2, go to the tables in Section T2 to find the allowable trapeze members for transverse, longitudinal and all-directional seismic braces for each level of the building. For transverse brace spacing of 20 feet and longitudinal/all-directional brace spacing of 40 feet:

Trapeze Member at Longitudinal and All-Directional Brace Locations

Floor Level	Fp	Section T Page	Longitudinal	All-Directional
Basement	0.32g	T2.2	(2) 13/16" Double Strut	(2) 13/16" Double Strut
1	0.32g	T2.2	(2) 13/16" Double Strut	(2) 13/16" Double Strut
2	0.42g	T2.3	3-1/4" Single Strut	3-1/4" Single Strut
3	0.54g	T2.4	3-1/4" Single Strut	3-1/4" Single Strut

Refer to page T2.0 for trapeze member at transverse brace locations; for these cases, member to be 1-5/8" Single Strut.

REVIEWED FOR CODE COMPLIANCE
HCAI
OPM-0043
BY: William Staehlin
DATE: 01/23/2023
CALIFORNIA BUILDING CODE 2022

MASON WEST
1601 E. Miraloma Ave. Placentia, CA 92870
TEL (714) 630 - 0701, www.masonwest.com

Jiefu "Jeff" Zhang, SE
California SE No. S5270

PAGE
A11.6

FIRE PROTECTION PIPING DESIGN PROCEDURE

Follow the five steps below to determine the seismic kit installation, hanger and brace connection details that pertain to a specific suspended piping system. An example is provided on the following pages.

Step 1. **Determine 'g' Forces:**
Calculate the lateral acceleration, F_P, and vertical acceleration, F_{PV}, in terms of 'g' using the equations outlined on page A10.0 for each level of the building.

Step 2. **Determine Operating Weight (lbs/ft or lbs):**
Determine the operating weight, W_P, of the distribution system (lbs/ft) to be seismically braced. Consider Zone of Influence (ZOI) effects from branch lines per NFPA 13, Annex 13. Refer to the tables on pages A11.11 and A11.12 for pipe weights. Per NFPA 13, W_P shall be taken as 1.15 times the weight of the water filled pipe.

Step 3. **Determine the Maximum Brace Spacing, S:**
Using the seismic 'g' force from Step 1 and the weight from Step 2, determine the maximum transverse brace spacing from the appropriate table on pages A11.11 and A11.12.

Step 4. **Determine Seismic Forces (lbs):**
Calculate the maximum lateral and vertical forces applied to the seismic brace system. Resolve the maximum lateral force to the brace, F_P, and maximum load on the hanger rod, T_{Rod}.

The resultant compression load on the hanger rod at seismic brace locations may be calculated to determine if rod stiffening is required.

Step 5. **Select Seismic Kit Installation, Hanger and Brace connection Details:**
Verify the details selected are correct by comparing the calculated lateral force, F_P, and load on the hanger rod, T_{Rod}, with the rated loads tabulated on the detail sheets. If F_P and T_{Rod} are less than or equal to the tabulated rated loads, the details are acceptable.

REVIEWED FOR CODE COMPLIANCE
HCAI
OPM-0043
BY: William Staehlin
DATE: 01/23/2023
CALIFORNIA BUILDING CODE, 2022

MASON WEST
1601 E. Miraloma Ave. Placentia, CA 92870
TEL (714) 630 - 0701, www.masonwest.com

Jiefu "Jeff" Zhang, SE
California SE No. S5270

PAGE
A11.7

FIRE PROTECTION PIPING DESIGN PROCEDURE (continued)

Example:

4"Ø schedule 40 steel pipe is suspended within a 3 story poured-in place concrete building with basement. The pipe is supported at every 15 feet. The elevation of each floor, including the basement, is 15 feet. The short period spectral acceleration, S_{DS}, listed on the contract structural drawings, is 1.02. The component importance factor, $I_P = 1.5$.

Note: When anchoring to concrete, allowable loads have been reduced by the concrete overstrength factor, Ωo, where applicable, in Sections M & N. Therefore, Ωo is not used when calculating applied seismic forces in this example.

Step 1. **Determine 'g' Forces**

Component amplification and response modification factors for steel pipe with grooved couplings are as follows:

$a_P = 2.5$; $R_P = 4.5$

Therefore,

$$F_P = (0.7)\frac{0.4(2.5)(1.02)W_P}{(4.5)/(1.5)}(1+2\frac{z}{h}) = 0.24(1+2\frac{z}{h})W_P$$

$$F_{P(min)} = (0.7)(0.3)(1.02)(1.5)W_P = 0.32W_P$$

$$F_{P(max)} = (0.7)(1.6)(1.02)(1.5)W_P = 1.71W_P$$

$$F_{PV} = (0.7)(0.2)(1.02)W_P = 0.14W_P$$

Tabulated below are the 'g' forces for each level of the building

Floor Level	F_P	F_{PV}
Basement	0.32g	0.14g
1	0.40g	0.14g
2	0.56g	0.14g
3	0.72g	0.14g

Note: We are expressing the seismic coefficient in terms of 'g' which is defined as C_p in NFPA 13.

Step 2. **Determine Operating Weight (lbs/ft):**

For this example, assume the combined weight of the main pipe and branch pipes within the Zone of Influence (ZOI) is 600 lbs.

REVIEWED FOR CODE COMPLIANCE
HCAi
OPM-0043
BY: William Staehlin
DATE: 01/23/2023
CALIFORNIA BUILDING CODE, 2022

MASON WEST
1601 E. Miraloma Ave. Placentia, CA 92870
TEL (714) 630 - 0701, www.masonwest.com

Jiefu "Jeff" Zhang, SE
California SE No. S5270

PAGE
A11.8

FIRE PROTECTION PIPING DESIGN PROCEDURE (continued)

Step 3. **Determine the Maximum Brace Spacings**

The maximum transverse brace spacing for 4"Ø steel pipe is 40 feet. However, we must check the pipe for the combined load of the main pipe and branch lines of 600 lbs using the appropriate seismic coefficient 'g' table on page A11.12.

From Step 2, the maximum 'g' force of 0.72 occurs on level 3. Go to Table 1 on page A11.12 for maximum 'g' of 0.75. For 4"Ø pipe at 40 foot spacing, the maximum weight, W_P, is 1526 lbs. Since this is greater than 600 lbs, the pipe can be braced in the transverse direction at 40 feet maximum spacing.

The maximum longitudinal brace spacing of 4"Ø pipe is 80 feet. However, we will limit the brace spacing to 60 feet for this example.

Step 4. **Determine Seismic Forces (lbs):**

For Basement Level,

F_P(Transverse) = 0.32 x 600 lbs x 1.15 = 221 lbs
F_P(Longitudinal) = 0.32 x 16.5 lbs/ft x 1.15 x 60 ft brace spacing = 317 lbs
F_{PV} = 0.14 x 16.5 lbs/ft x 1.15 x 15 ft support spacing = 40 lbs

Note: Fp does not need to be increased due to installation tolerances indicated in assembly details.

For seismic solid brace installations:

T_{Rod}(Transverse) = F_P(Transverse) tan (brace angle) + (16.5 lbs/ft x 1.15 x 15 ft + F_{PV}) = 546 lbs.

T_{Rod}(Longitudinal) = F_P(Longitudinal) tan (brace angle) + (16.5 lbs/ft x 1.15 x 15 ft + F_{PV}) = 642 lbs.

Note: Brace angle = 45 degrees for this example.

For seismic cable brace installations:

T_{Rod} = (16.5 lbs/ft x 1.15 x 15 ft + F_{PV}) = 325 lbs.

Similarly for Levels 1, 2 and 3, F_P, F_{PV} and T_{Rod} are as tabulated below.

Floor Level	F_P (Transverse)	F_P (Longitudinal)	F_{PV}	T_{Rod}(Solid -Tran)	T_{Rod}(Solid-Long)	T_{Rod}(Cable)
Basement	221 lbs	317 lbs	40 lbs	546 lbs	642 lbs	325 lbs
1	276 lbs	455 lbs	40 lbs	601 lbs	780 lbs	325 lbs
2	386 lbs	638 lbs	40 lbs	711 lbs	963 lbs	325 lbs
3	497 lbs	820 lbs	40 lbs	822 lbs	1145 lbs	325 lbs

C_{Rod} = $F_P$tan (brace angle) + F_{PV} - 0.9Wp
= 317 lbs x tan (45 degrees) + 40 lbs - 0.9 x (16.5 lbs/ft x 1.15 x 15 ft) = 101 lbs.

Note: Brace Note: If $C_{Rod} \leq 0$, rod stiffeners are not required.

REVIEWED FOR CODE COMPLIANCE
HCAI
OPM-0043
BY: William Staehlin
DATE: 01/23/2023
CALIFORNIA BUILDING CODE, 2022

MASON WEST
1601 E. Miraloma Ave. Placentia, CA 92870
TEL (714) 630 - 0701, www.masonwest.com

Jiefu "Jeff" Zhang, SE
California SE No. S5270

FIRE PROTECTION PIPING DESIGN PROCEDURE (continued)

Step 5. **Select Seismic Kit Installation, Hanger, and Brace connection Details:**

Compare F_P values when using pipe brace details from Section C and brace connection details from Section N. Compare T_{Rod} values with Ta when using hanger connection details from Section M. The table below summarizes details that are applicable for each floor.

Seismic Solid (Rigid) Brace, Hanger and Brace connection Details

Floor Level	Fp	Tran/Long Spacing	Kit Installation Details			Trans. Hanger Conn. Desig.	Long. Hanger Conn. Desig.	All Dir. Hanger Conn. Desig.	Trans. Brace Conn. Desig.	Long./ All Dir. Brace Conn. Desig.
			Transverse	Longitudinal	All-Directional					
Basement	0.32g	40'/60'	C1.30	C1.32	C1.34	63F	63G	63H	63C	63D
1	0.40g	40'/60'	C1.30	C1.32	C1.34	63G	63H	63J	63D	63E
2	0.56g	40'/60'	C1.30	C1.33	C1.35	63H	63J	63K	63E	63G
3	0.72g	40'/60'	C1.30	C1.33	N/A	63H	63L	63L	63F	63H

Seismic Cable (Standard) Brace, Hanger and Brace connection Details

Floor Level	Fp	Tran/Long Spacing	Kit Installation Details			Hanger Conn. Desig.	Trans. Brace Conn. Desig.	Long./ All Dir. Brace Conn. Desig.
			Transverse	Longitudinal	All-Directional			
Basement	0.32g	40'/60'	C2.30	C2.31	C2.32	63D	50C	50D
1	0.40g	40'/60'	C2.30	C2.31	C2.32	63D	50D	50E
2	0.56g	40'/60'	C2.30	C2.41	C2.42	63D	75E	63G
3	0.72g	40'/60'	C2.30	C2.41	C2.42	63D	75F	63H

REVIEWED FOR CODE COMPLIANCE
HCAi
OPM-0043
BY William Staehlin
DATE: 01/23/2023
CALIFORNIA BUILDING CODE, 2022

MASON WEST
1601 E. Miraloma Ave. Placentia, CA 92870
TEL (714) 630 - 0701, www.masonwest.com

Jiefu "Jeff" Zhang, SE
California SE No. S5270

PAGE
A11.10

MAXIMUM TRANSVERSE BRACE SPACING FOR FIRE PROTECTION PIPING

Schedule 10 Steel Pipe

Table 1

Pipe Size (in)	Weight/ft (lbs/ft)	Max Gravity Support Spacing (ft)	Maximum Weight Using ZOI Method, W_P (lbs)									
			Max 'g' force 0.75					Max 'g' force 1.0				
			Max. Transverse Brace Spacing (ft)					Max. Transverse Brace Spacing (ft)				
			20	25	30	35	40	20	25	30	35	40
1	1.84	12	115	92	75	N/A	N/A	86	69	56	N/A	N/A
1¼	2.55	12	193	154	127	N/A	N/A	145	116	95	N/A	N/A
1½	3.09	15	256	205	168	N/A	N/A	192	154	126	N/A	N/A
2	4.28	15	416	333	273	N/A	N/A	312	250	205	N/A	N/A
2½	5.97	15	682	546	447	N/A	N/A	512	409	335	N/A	N/A
3	8.0	15	1037	829	680	582	488	778	622	510	437	366
4	11.9	15	1756	1405	1151	987	826	1317	1054	863	740	620
5	17.5	15	3027	2421	1984	1700	1424	2270	1816	1488	1275	1068
6	23.2	15	4344	3475	2847	2440	2044	3258	2606	2135	1830	1533
8	40.4	15	10314	8251	6760	5794	4852	7736	6188	5070	4346	3639

Table 2

Pipe Size (in)	Weight/ft (lbs/ft)	Max Gravity Support Spacing (ft)	Maximum Weight Using ZOI Method, W_P (lbs)									
			Max 'g' force 1.25					Max 'g' force 1.75				
			Max. Transverse Brace Spacing (ft)					Max. Transverse Brace Spacing (ft)				
			20	25	30	35	40	20	25	30	35	40
1	1.84	12	69	55	45	N/A	N/A	49	39	32	N/A	N/A
1¼	2.55	12	116	93	76	N/A	N/A	83	66	54	N/A	N/A
1½	3.09	15	154	123	101	N/A	N/A	110	88	72	N/A	N/A
2	4.28	15	250	200	164	N/A	N/A	178	143	117	N/A	N/A
2½	5.97	15	409	328	268	N/A	N/A	292	234	192	N/A	N/A
3	8.0	15	622	498	408	349	293	444	355	291	250	209
4	11.9	15	1054	843	691	592	496	753	602	493	423	354
5	17.5	15	1816	1453	1190	1020	854	1297	1038	850	729	610
6	23.2	15	2606	2085	1708	1464	1226	1862	1489	1220	1046	876
8	40.4	15	6188	4951	4056	3477	2911	4420	3536	2897	2483	2079

REFER TO EXAMPLE ON PAGE A11.9 BEFORE USING THESE TABLES.

HCAi
OPM-0043
BY: William Staehlin
DATE: 01/23/2023
REVIEWED FOR CODE COMPLIANCE
CALIFORNIA BUILDING CODES

MASON WEST
1601 E. Miraloma Ave. Placentia, CA 92870
TEL (714) 630 - 0701, www.masonwest.com

Jiefu "Jeff" Zhang, SE
California SE No. S5270

PAGE
A11.11

MAXIMUM TRANSVERSE BRACE SPACING FOR FIRE PROTECTION PIPING

Schedule 40 Steel Pipe

Table 1

Pipe Size (in)	Weight/ft (lbs/ft)	Max Gravity Support Spacing (ft)	Maximum Weight Using ZOI Method, W_P (lbs)									
			Max 'g' force					Max 'g' force				
			0.75					1.0				
			Max. Transverse Brace Spacing (ft)					Max. Transverse Brace Spacing (ft)				
			20	25	30	35	40	20	25	30	35	40
1	2.1	12	133	106	87	N/A	N/A	100	80	65	N/A	N/A
1¼	3.0	12	236	189	155	N/A	N/A	177	141	116	N/A	N/A
1½	3.6	15	324	260	213	N/A	N/A	243	195	159	N/A	N/A
2	5.2	15	558	447	366	N/A	N/A	419	335	274	N/A	N/A
2½	7.9	15	1075	860	705	N/A	N/A	806	645	529	N/A	N/A
3	10.8	15	1741	1393	1141	978	819	1306	1045	856	734	614
4	16.5	15	3245	2596	2127	1823	1526	2433	1947	1595	1367	1145
5	23.7	15	5512	4410	3613	3097	2593	4134	3307	2710	2323	1945
6	31.5	15	8578	6862	5622	4819	4035	6433	5147	4217	3614	3026
8	50	15	16979	13584	11129	9539	7988	12735	10188	8347	7154	5991
10	75	15	30214	24171	19803	16974	14213	22660	18128	14852	12730	10660
12	103	15	44090	35272	28898	24770	20741	33068	26454	21674	18577	15556

Table 2

Pipe Size (in)	Weight/ft (lbs/ft)	Max Gravity Support Spacing (ft)	Maximum Weight Using ZOI Method, W_P (lbs)									
			Max 'g' force					Max 'g' force				
			1.25					1.75				
			Max. Transverse Brace Spacing (ft)					Max. Transverse Brace Spacing (ft)				
			20	25	30	35	40	20	25	30	35	40
1	2.1	12	80	64	52	N/A	N/A	57	46	37	N/A	N/A
1¼	3.0	12	141	113	93	N/A	N/A	101	81	66	N/A	N/A
1½	3.6	15	195	156	128	N/A	N/A	139	111	91	N/A	N/A
2	5.2	15	335	268	220	N/A	N/A	239	191	157	N/A	N/A
2½	7.9	15	645	516	423	N/A	N/A	461	369	302	N/A	N/A
3	10.8	15	1045	836	685	587	491	746	597	489	419	351
4	16.5	15	1947	1557	1276	1094	916	1391	1112	911	781	654
5	23.7	15	3307	2646	2168	1858	1556	2362	1890	1548	1327	1111
6	31.5	15	5147	4117	3373	2891	2421	3676	2941	2409	2065	1729
8	50	15	10188	8150	6677	5723	4793	7277	5822	4770	4088	3423
10	75	15	18128	14502	11882	10184	8528	12949	10359	8487	7275	6091
12	103	15	26454	21163	17339	14862	12445	18896	15117	12385	10616	8889

REFER TO EXAMPLE ON PAGE A11.9 BEFORE USING THESE TABLES.

REVIEWED FOR CODE COMPLIANCE
HCAI
OPM-0043
BY: William Staehlin
DATE: 1/23/2023
CALIFORNIA BUILDING CODES

MASON WEST
1601 E. Miraloma Ave. Placentia, CA 92870
TEL (714) 630 - 0701, www.masonwest.com

Jiefu "Jeff" Zhang, SE
California SE No. S5270

PAGE
A11.12

LAYOUT OF SEISMIC BRACES FOR INDIVIDUALLY SUSPENDED PIPING

Step 1. Separate the layout of the system into individual straight runs. A straight run is defined as a section of the utility between changes in direction. If an offset(s) occurs between changes of direction it may be neglected if the distance perpendicular to the run is less than the offset length, $\frac{S}{10}$, where S is the maximum transverse brace spacing tabulated in Section S.

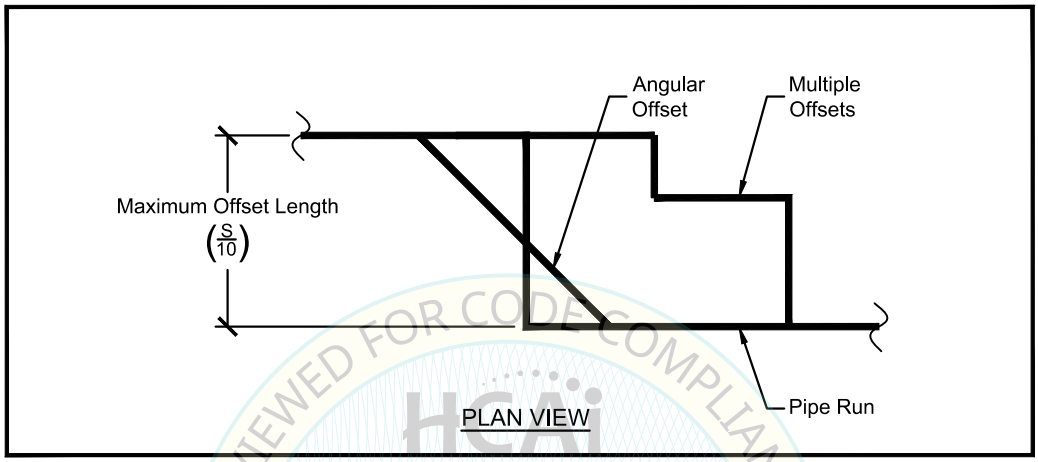

REVIEWED FOR CODE COMPLIANCE
HCAI
OPM-0043
BY: William Staehlin
DATE: 01/23/2023
CALIFORNIA BUILDING CODE 2022

Step 2. Each straight run must be braced in the transverse direction (perpendicular to the run) at each end.

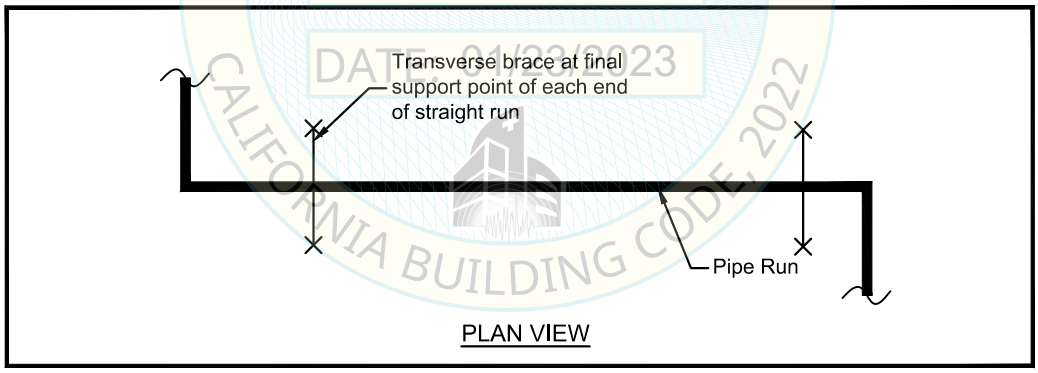

MASON WEST
1601 E. Miraloma Ave. Placentia, CA 92870
TEL (714) 630 - 0701, www.masonwest.com

Jiefu "Jeff" Zhang, SE
California SE No. S5270

PAGE
A12.0

LAYOUT OF SEISMIC BRACES FOR INDIVIDUALLY SUSPENDED PIPING (continued)

Step 3. Add transverse braces, if required, to limit the spacing(s) to the maximum spacing indicated in Section S.

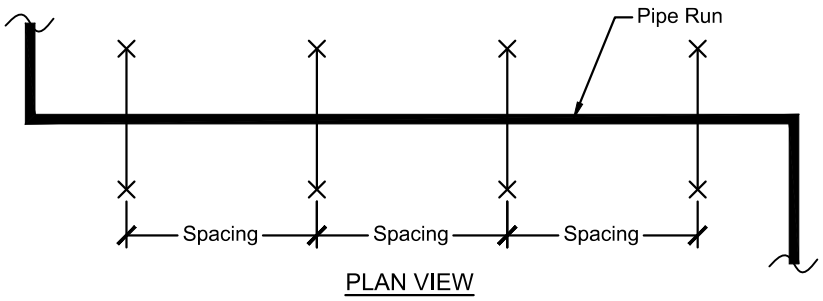

PLAN VIEW

Spacing [**Maximum transverse brace spacing**

Step 4. Each straight run must be braced in the longitudinal direction (parallel to the run) with at least one brace. Transverse braces within offset distance 'A' may be used in addition to or in lieu of independent longitudinal braces. The maximum length of pipe around a 90 degree turn (indicated as 'P' below) longitudinally braced from a transverse brace at offset distance 'A' is as follows:

When A [0.30*S, P = 0.5*S,
When A [0.25*S, P = 0.75*S,
When A [0.20*S, P = S,
When A [0.15*S, P = 1.5*S, where:

S = Maximum Allowable Transverse Brace Spacing (From Section S)
T = The distance between Transverse Braces
A = Offset Distance

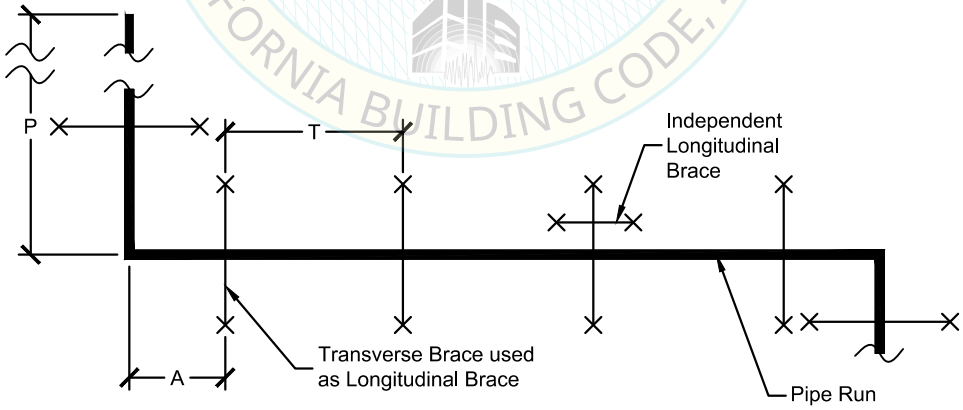

PLAN VIEW

REVIEWED FOR CODE COMPLIANCE
PCAI
OPM-0043
BY: William Staehlin
DATE: 01/23/2023
CALIFORNIA BUILDING CODE, 2022

MASON WEST
1601 E. Miraloma Ave. Placentia, CA 92870
TEL (714) 630 - 0701, www.masonwest.com

Jiefu "Jeff" Zhang, SE
California SE No. S5270

PAGE
A12.1

LAYOUT OF SEISMIC BRACES FOR INDIVIDUALLY SUSPENDED PIPING (continued)

Step 5. Multiple changes in direction may be treated as one complete system. Straight runs greater than the maximum offset length require 2 transverse braces. Straight runs less than the maximum offset length may require as few as one or no braces. (See layout below)

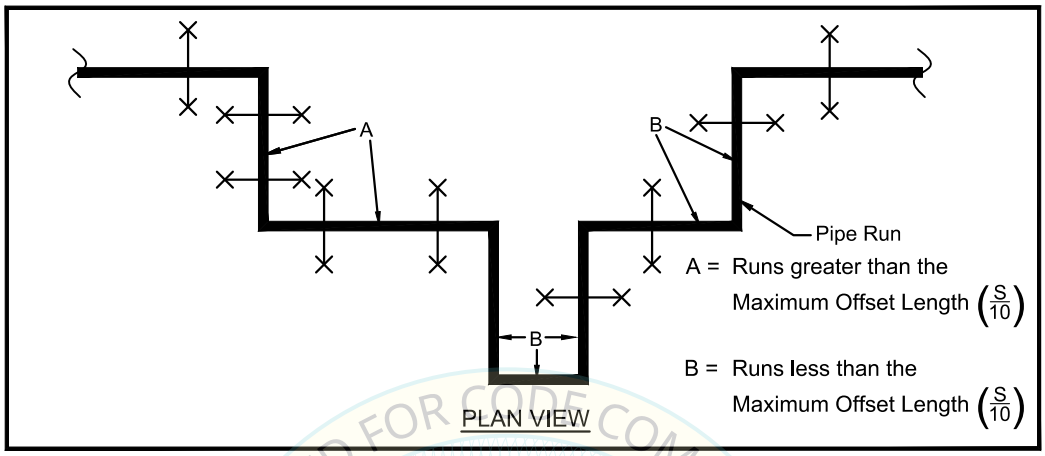

Step 6. Vertical drops to equipment must be restrained with a transverse brace at the final support point before the vertical drop. The distance from the transverse brace to the drop must be within the maximum offset distance 'A' as defined on Page A12.1. The maximum allowable length of the system braced from the transverse brace to the flexible connector is equal to 'P' as defined on Page A12.1. If this distance is greater than 'P', an additional brace is required at the end of the vertical drop by attaching to the floor. Consideration must be given to seismic relative displacements (SRD) imposed on pipe when braced to the floor.

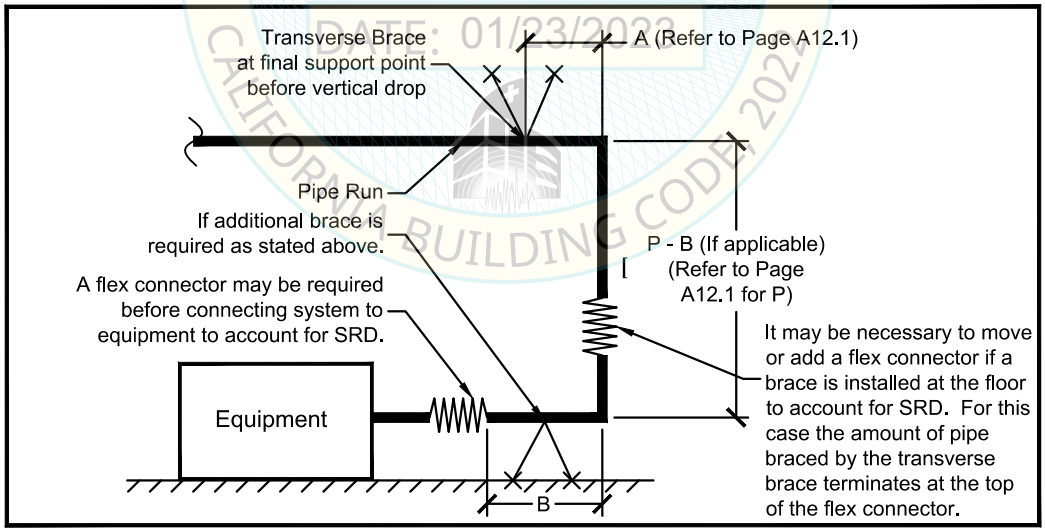

REVIEWED FOR CODE COMPLIANCE BY: William Staehlin DATE: 01/23/2023 CALIFORNIA BUILDING CODE 2022

MASON WEST
1601 E. Miraloma Ave. Placentia, CA 92870
TEL (714) 630 - 0701, www.masonwest.com

Jiefu "Jeff" Zhang, SE
California SE No. S5270

PAGE
A12.2

LAYOUT OF SEISMIC BRACES FOR TRAPEZE SUSPENDED PIPING (continued)

Step 1a. Separate the layout of the system into individual straight runs. A straight run is defined as a section of the utility between changes in direction. If an offset(s) occurs between changes of direction it may be neglected if the distance perpendicular to each pipe run is less than the offset length, $\frac{S}{10}$, where S is the maximum transverse brace spacing tabulated in Section S.

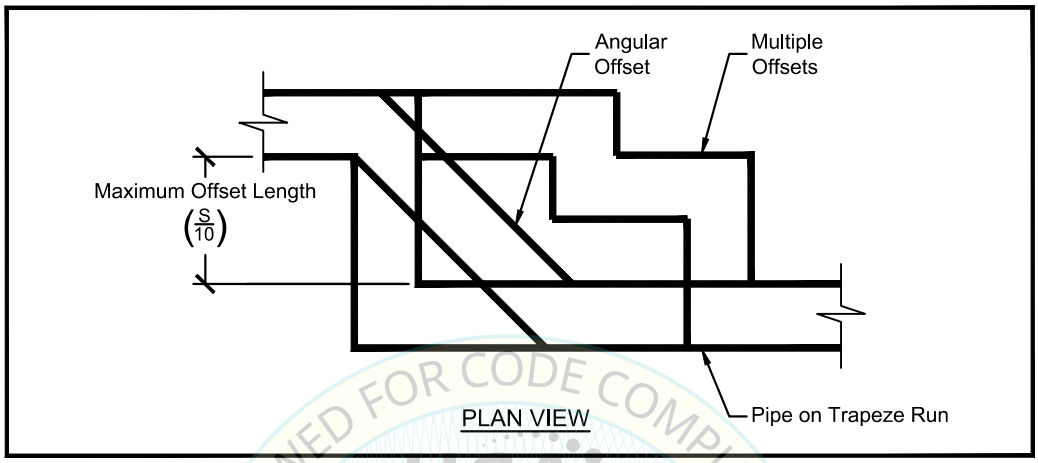

REVIEWED FOR CODE COMPLIANCE
HCAi
OPM-0043
BY: William Staehlin
DATE: 01/23/2023
CALIFORNIA BUILDING CODE 2022

Step 2a. Each straight run must be braced in the transverse direction (perpendicular to the run) at each end.

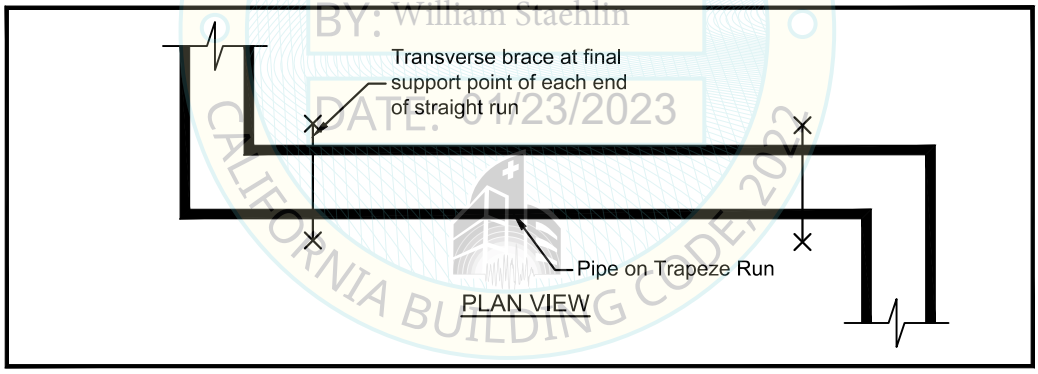

MASON WEST
1601 E. Miraloma Ave. Placentia, CA 92870
TEL (714) 630 - 0701, www.masonwest.com

Jiefu "Jeff" Zhang, SE
California SE No. S5270

PAGE
A12.3

LAYOUT OF SEISMIC BRACES
TRAPEZE SUSPENDED FOR PIPING (continued)

Step 3a. Add transverse braces, if required, to limit the spacing(s) to the maximum spacing indicated in Section S.

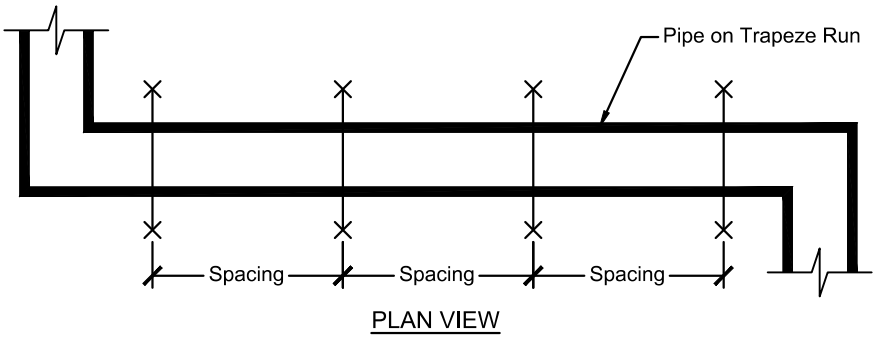

PLAN VIEW

Spacing [**Maximum transverse brace spacing**

Step 4a. Each straight run must be braced in the longitudinal direction (parallel to the run) with at least one brace. Transverse braces within offset distance 'A' may be used in addition to or in lieu of independent longitudinal braces. The maximum length of pipe around a 90 degree turn (indicated as 'P' below) longitudinally braced from a transverse brace at offset distance 'A' is as follows:

When A [0.30*S, P = 0.5*S,
When A [0.25*S, P = 0.75*S,
When A [0.20*S, P = S,
When A [0.15*S, P = 1.5*S, where:

S = Maximum Allowable Transverse Brace Spacing (From Section S)
T = The distance between Transverse Braces
A = Offset Distance

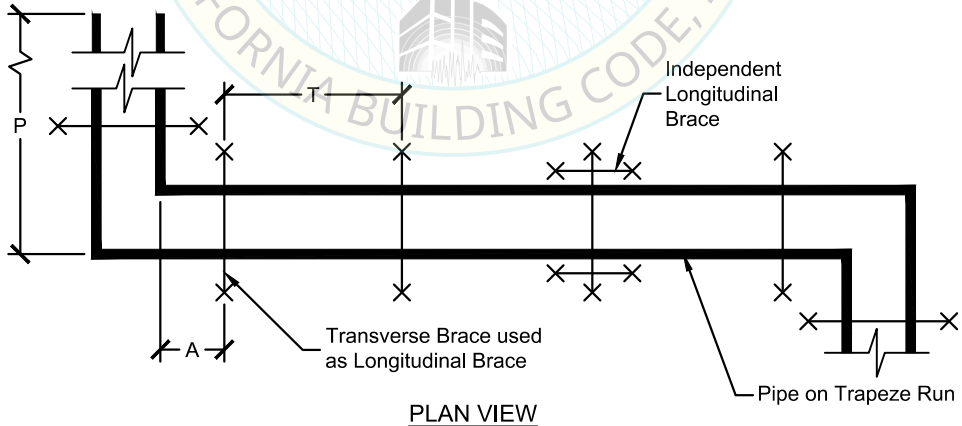

PLAN VIEW

REVIEWED FOR CODE COMPLIANCE
OPM-0043
BY: William Staehlin
DATE: 01/23/2023
CALIFORNIA BUILDING CODE, 2022

MASON WEST
1601 E. Miraloma Ave. Placentia, CA 92870
TEL (714) 630 - 0701, www.masonwest.com

Jiefu "Jeff" Zhang, SE
California SE No. S5270

PAGE
A12.4

LAYOUT OF SEISMIC BRACES FOR TRAPEZE SUSPENDED PIPING (continued)

Step 5a. Multiple changes in direction may be treated as one complete system. Straight runs greater than the maximum offset length require 2 transverse braces. Straight runs less than the maximum offset length may require as few as one or no braces. (See layout below)

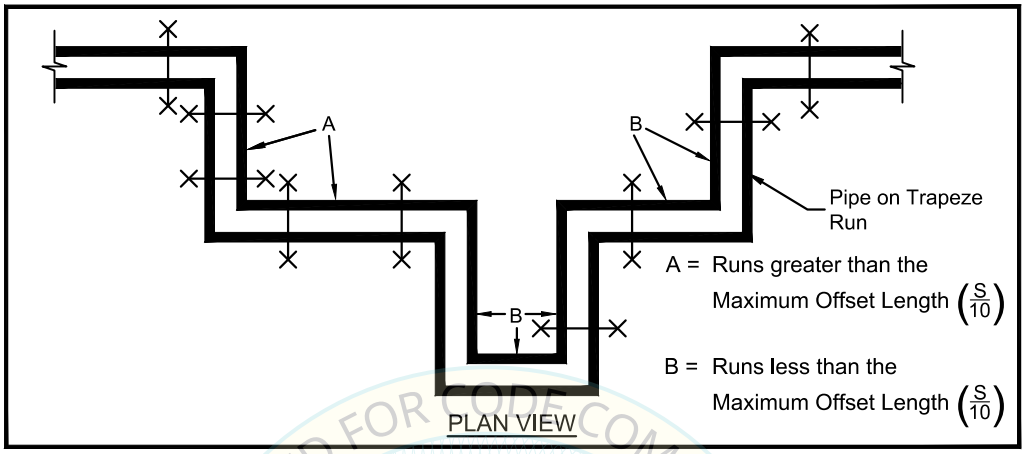

Step 6a. Vertical drops to equipment must be restrained with a transverse brace at the final support point before the vertical drop. The distance from the transverse brace to the drop must be within the maximum offset distance 'A' as defined on Page A12.4. The maximum allowable length of the system braced from the transverse brace to the flexible connector is equal to 'P' as defined on Page A12.4. If this distance is greater than 'P', an additional brace is required at the end of the vertical drop by attaching to the floor. Consideration must be given to seismic relative displacements (SRD) imposed on the pipe when braced to the floor.

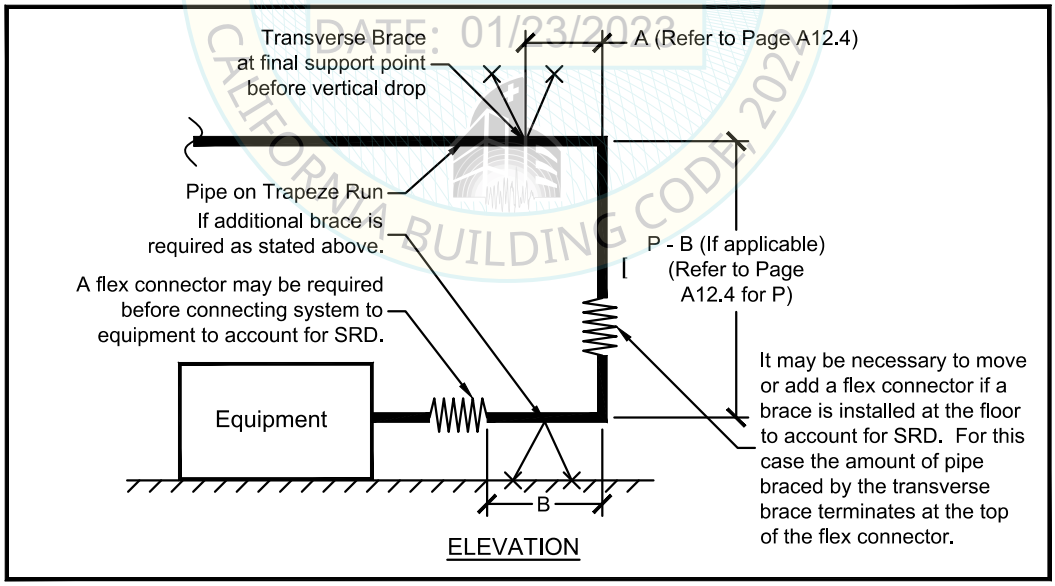

REVIEWED FOR CODE COMPLIANCE BY: William Staehlin DATE: 01/23/2023 CALIFORNIA BUILDING CODE 2022

MASON WEST
1601 E. Miraloma Ave. Placentia, CA 92870
TEL (714) 630 - 0701, www.masonwest.com

Jiefu "Jeff" Zhang, SE
California SE No. S5270

PAGE
A12.5

LAYOUT OF SEISMIC BRACES FOR FIRE PROTECTION PIPING

Step 1. Separate the layout of the system into individual straight runs. A straight run is defined as a section of the utility between changes in direction. If an offset(s) occurs between changes of direction it may be neglected if the distance perpendicular to the run is less than 24".

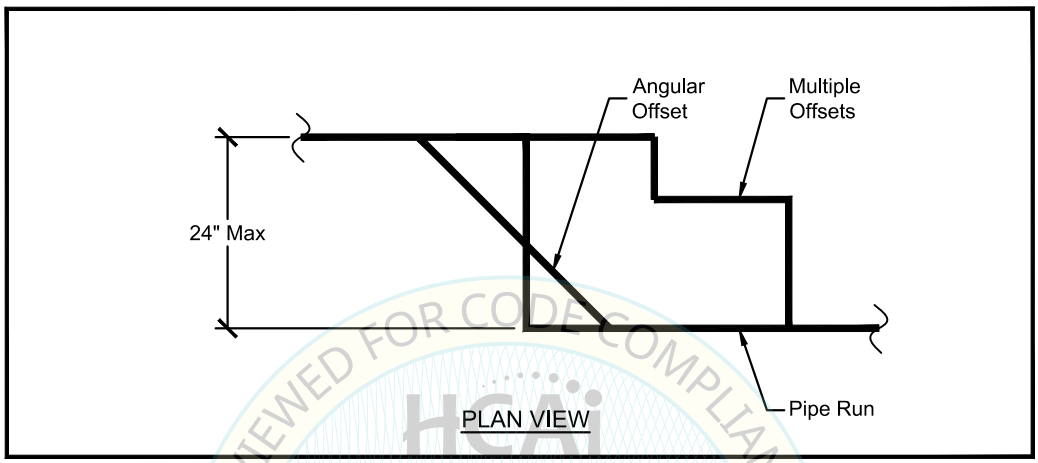

REVIEWED FOR CODE COMPLIANCE
HCAI
OPM-0043
BY: William Staehlin
DATE: 01/23/2023
CALIFORNIA BUILDING CODE 2022

Step 2. Each straight run must be braced in the transverse direction (perpendicular to the run) at each end.

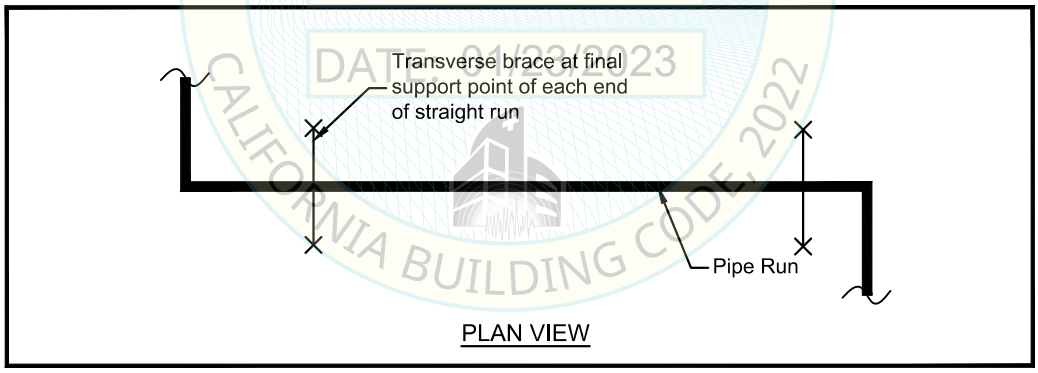

MASON WEST
1601 E. Miraloma Ave. Placentia, CA 92870
TEL (714) 630 - 0701, www.masonwest.com

Jiefu "Jeff" Zhang, SE
California SE No. S5270

PAGE
A12.6

LAYOUT OF SEISMIC BRACES FOR FIRE PROTECTION PIPING (continued)

Step 3. Add transverse braces, if required, to limit the spacing(s) to the maximum spacing indicated in Section S.

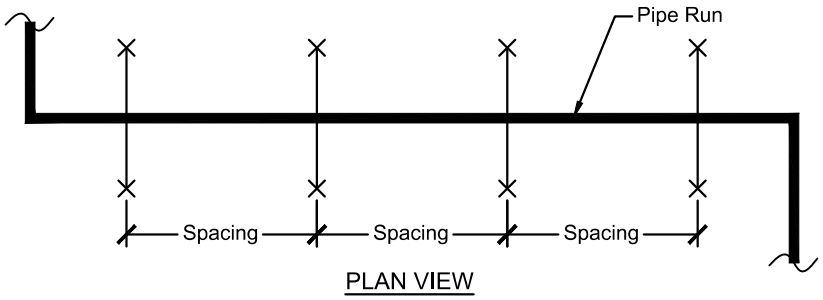

PLAN VIEW

Spacing [**Maximum transverse brace spacing**

Step 4. Each straight run must be braced in the longitudinal direction (parallel to the run) with at least one brace. Transverse braces within the maximum offset length discussed in Step 1 may be used in addition to or in lieu of independent longitudinal braces. The max length of pipe around a 90 degree turn (indicated as 'P' below) longitudinally braced from a transverse brace = L-0.5T-A (not to exceed S), where:

L = Maximum Allowable Longitudinal Brace Spacing (From Section S)
S = Maximum Allowable Transverse Brace Spacing (From Section S)
T = The distance between Transverse Braces
A = Offset Length [Maximum Offset Length $\left(\frac{S}{10}\right)$

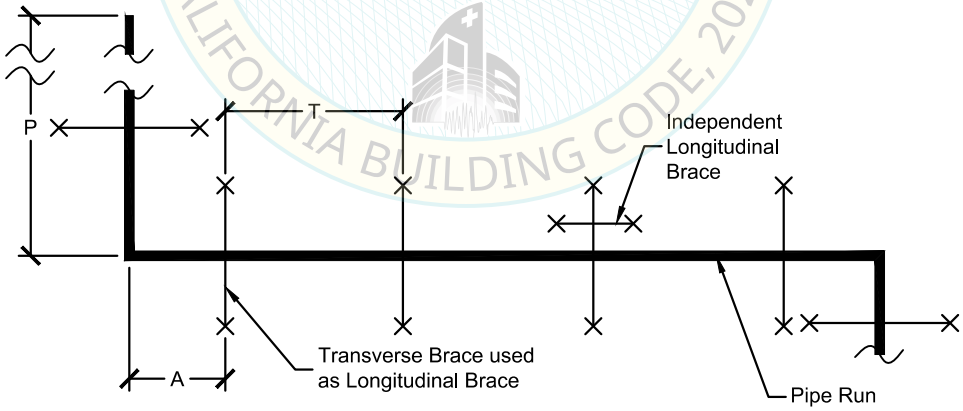

PLAN VIEW

REVIEWED FOR CODE COMPLIANCE
OPM-0043
BY: William Staehlin
DATE: 01/23/2023
CALIFORNIA BUILDING CODE, 2022

MASON WEST
1601 E. Miraloma Ave. Placentia, CA 92870
TEL (714) 630 - 0701, www.masonwest.com

Jiefu "Jeff" Zhang, SE
California SE No. S5270

PAGE
A12.7

LAYOUT OF SEISMIC BRACES FOR FIRE PROTECTION PIPING (continued)

Step 5. Multiple changes in direction may be treated as one complete system. Straight runs greater than the maximum offset length require 2 transverse braces. Straight runs less than the maximum offset length may require as few as one or no braces. (See layout below)

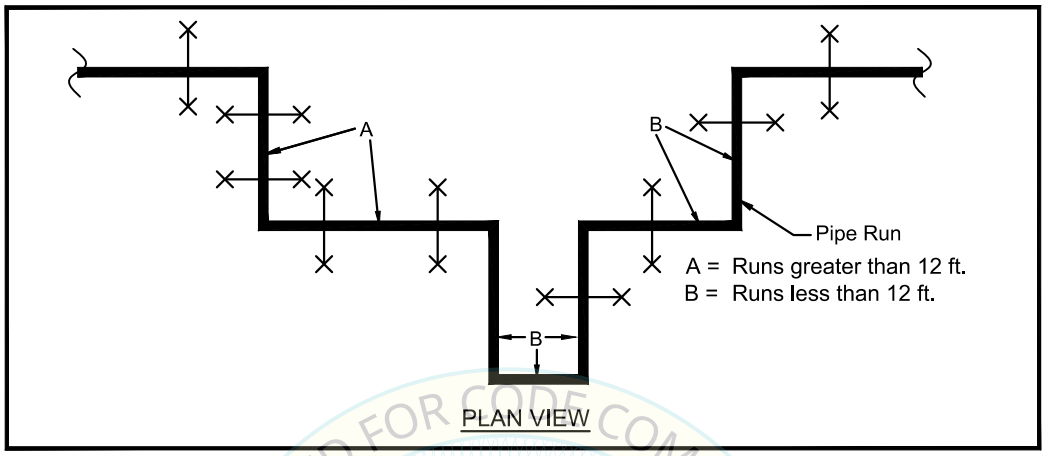

Step 6. Vertical drops to equipment must be restrained with a transverse brace at the final support point before the vertical drop. The distance from the transverse brace to the drop must be within the maximum offset length of the system. The maximum allowable length of the system braced from the transverse brace to the flexible connector is equal to ½ of the maximum transverse brace spacing. If this distance is greater than ½ of the maximum transverse brace spacing, an additional brace is required at the end of the vertical drop by attaching to the floor. Consideration must be given to seismic relative displacements (SRD) imposed on pipe when braced to the floor.

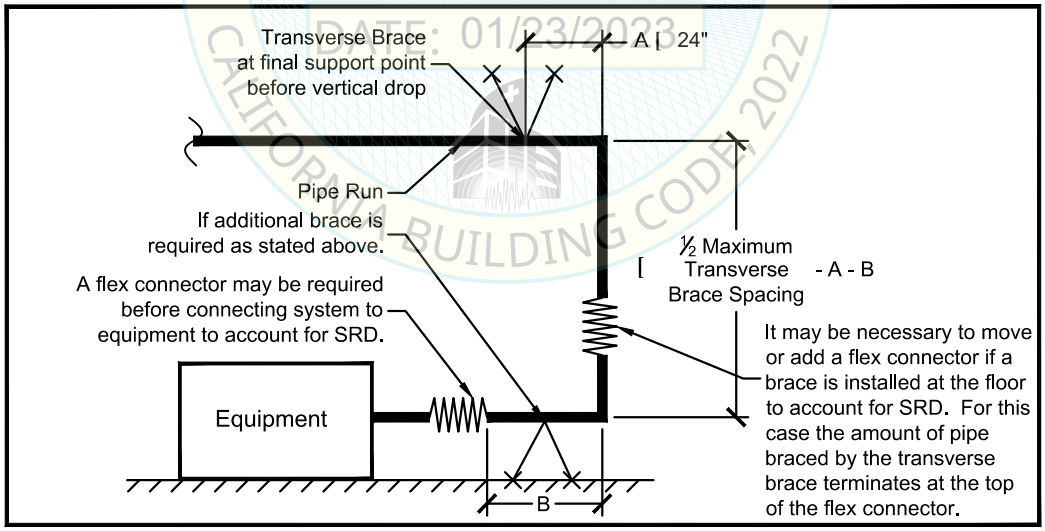

REVIEWED FOR CODE COMPLIANCE
OPM-0043
BY: William Staehlin
DATE: 01/23/2023
CALIFORNIA BUILDING CODE 2022

MASON WEST
1601 E. Miraloma Ave. Placentia, CA 92870
TEL (714) 630 - 0701, www.masonwest.com

Jiefu "Jeff" Zhang, SE
California SE No. S5270

PAGE
A12.8

THIS PAGE INTENTIONALLY LEFT BLANK.

MASON WEST
1601 E. Miraloma Ave. Placentia, CA 92870
TEL (714) 630 - 0701, www.masonwest.com

Jiefu "Jeff" Zhang, SE
California SE No. S5270

PAGE
A12.9

12" RULE FOR SUSPENDED PIPING

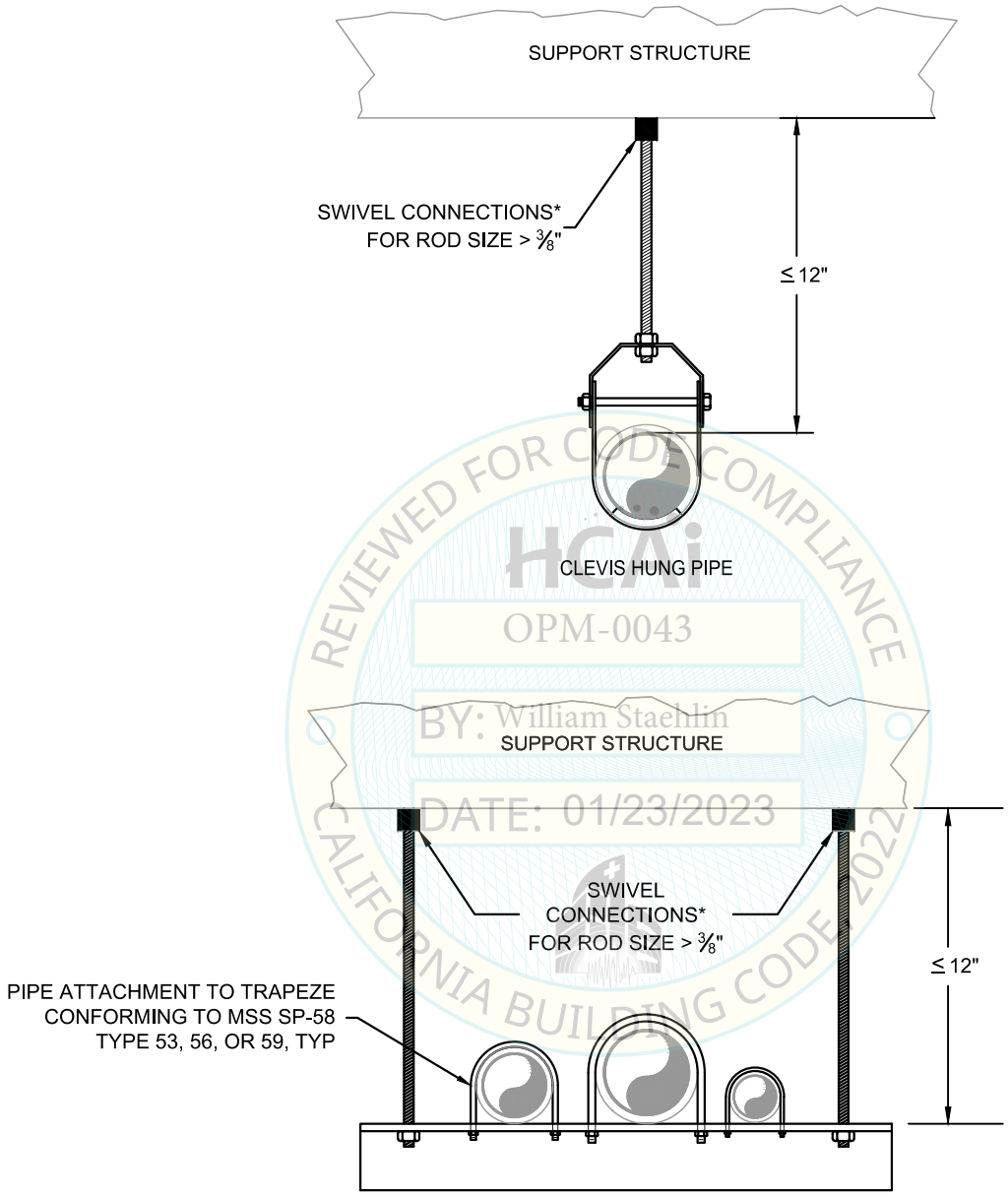

PIPES ON TRAPEZE

REVIEWED FOR CODE COMPLIANCE
HCAi
OPM-0043
BY: William Staehlin
DATE: 01/23/2023
CALIFORNIA BUILDING CODE 2022

*NOTE: CONNECTIONS COMPLYING INCLUDE SWIVEL JOINTS, EYE BOLTS, ETC.

MASON WEST
1601 E. Miraloma Ave. Placentia, CA 92870
TEL (714) 630 - 0701, www.masonwest.com

Jiefu "Jeff" Zhang, SE
California SE No. S5270

PAGE
A13.0

SEISMIC BRACE REQUIREMENTS
FOR PIPING ON MULTI-LAYER TRAPEZES

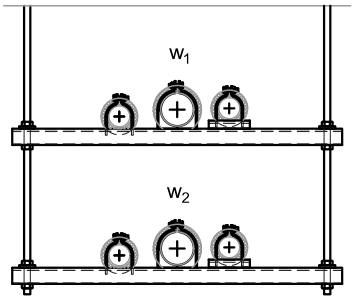

CASE 1
IF w_{total} < 10 LB/FT,
NO BRACING REQ'D

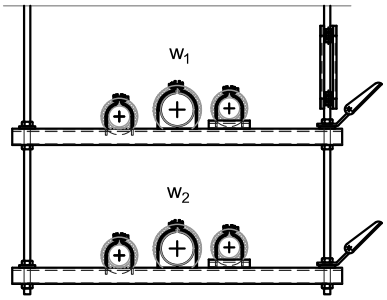

CASE 2
IF $w_1 \geq 10$ LB/FT AND $w_2 \geq 10$ LB/FT,
BRACE EACH LAYER INDEPENDENTLY

REVIEWED FOR CODE COMPLIANCE
HCAi
OPM-0043
BY: William Staehlin
DATE: 01/23/2023
CALIFORNIA BUILDING CODE, 2022

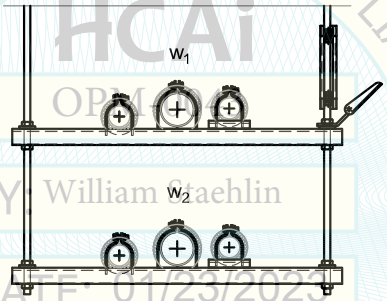

CASE 3
IF $w_{total} \geq 10$ LB/FT AND $w_2 < 10$ LB/FT,
BRACE TOP TRAPEZE FOR w_{total}
(BOTTOM TRAPEZE NEED NOT BE BRACED PROVIDED THE
LOAD IS ACCOUNTED FOR IN THE NEAREST BRACED LAYER)

NOTES:
1) REGISTERED DESIGN PROFESSIONAL (RDP) SHALL VERIFY BRACE REQUIREMENTS LISTED ON PAGE A10.5.
2) HANGER REACTIONS SHALL BE DETERMINED FROM TOTAL PIPING WEIGHT FROM ALL LAYERS.

MASON WEST
1601 E. Miraloma Ave. Placentia, CA 92870
TEL (714) 630 - 0701, www.masonwest.com

Jiefu "Jeff" Zhang, SE
California SE No. S5270

PAGE
A13.1

TRANSVERSE BRACE ALLOWABLE ANGLE VARIATIONS IN PLAN FOR INDIVIDUALLY SUSPENDED PIPE

THE ANGLE VARIATION MAY INCREASE BEYOND 2.5 DEGREES UP TO 15 DEGREES PROVIDED THE TRANSVERSE BRACES ARE SKEWED IN THE SAME DIRECTION AND A LONGITUDINAL BRACE OCCURS OPPOSITE THE SKEWED ANGLE DIRECTION AS SHOWN BELOW.

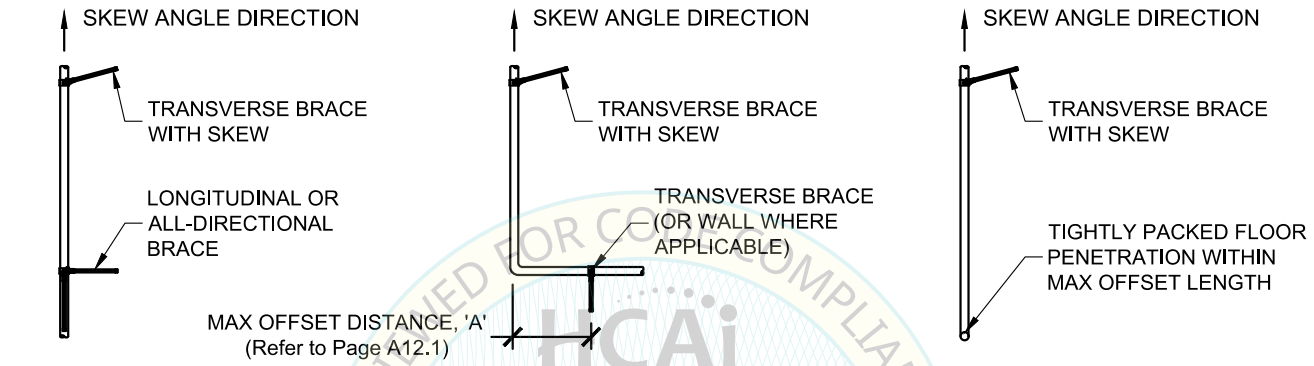

SOLID BRACE

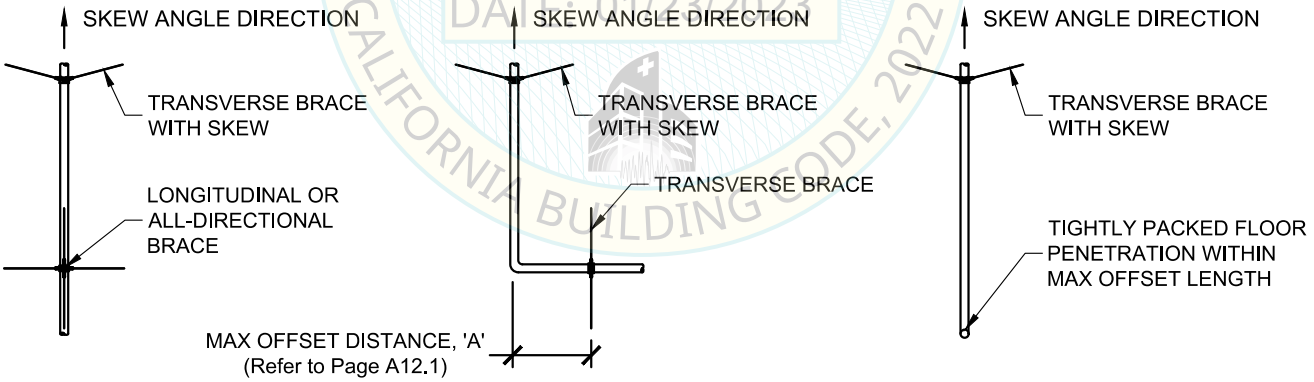

CABLE BRACE

NOTE: ANY OR ALL BRACE LOCATIONS ARE PERMITTED TO USE THE ANGLE VARIATION TO MEET FIELD CONDITIONS.

REVIEWED FOR CODE COMPLIANCE
HCAi
OPM-0043
BY: William Staehlin
DATE: 01/23/2023
CALIFORNIA BUILDING CODE, 2022

MASON WEST
1601 E. Miraloma Ave. Placentia, CA 92870
TEL (714) 630 - 0701, www.masonwest.com

Jiefu "Jeff" Zhang, SE
California SE No. S5270

PAGE
A14.0

TRANSVERSE BRACE ALLOWABLE ANGLE VARIATIONS IN PLAN FOR PIPE ON TRAPEZE

THE ANGLE VARIATION MAY INCREASE BEYOND 2.5 DEGREE UP TO 15 DEGREE PROVIDED THE TRANSVERSE BRACES ARE SKEWED IN THE SAME DIRECTION AND A LONGITUDINAL BRACE OCCURS OPPOSITE THE SKEWED ANGLE DIRECTION AS SHOWN BELOW.

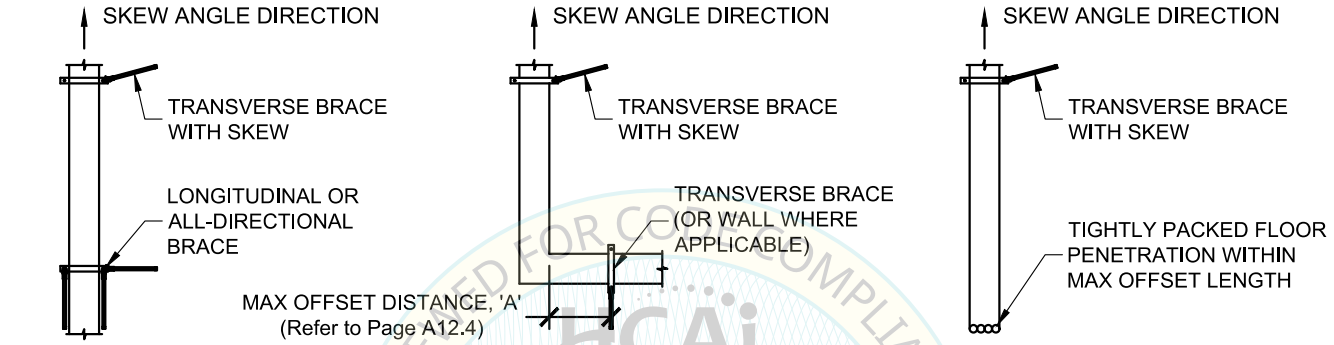

SOLID BRACE

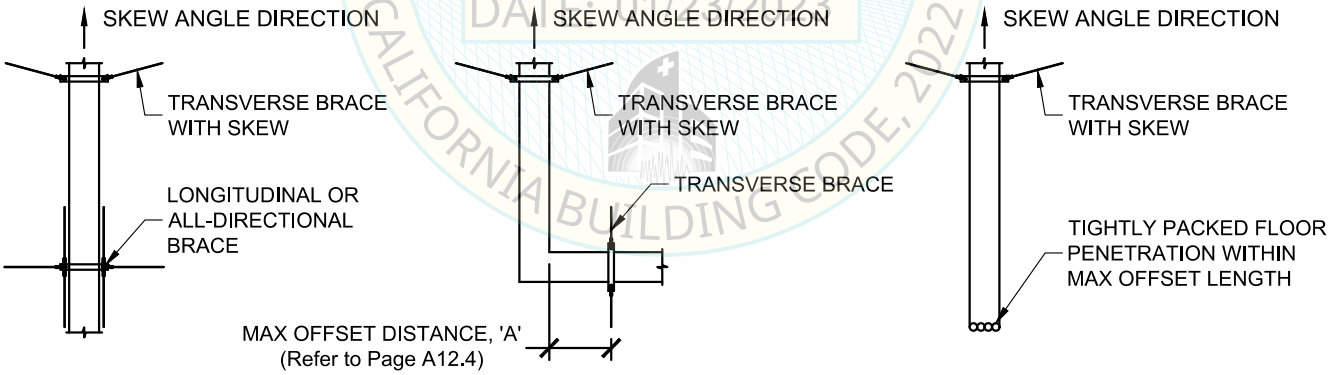

CABLE BRACE

NOTE: ANY OR ALL BRACE LOCATIONS ARE PERMITTED TO USE THE ANGLE VARIATION TO MEET FIELD CONDITIONS.

REVIEWED FOR CODE COMPLIANCE
HCAi
OPM-0043
BY: William Staehlin
DATE: 01/23/2023
CALIFORNIA BUILDING CODE, 2022

MASON WEST
1601 E. Miraloma Ave. Placentia, CA 92870
TEL (714) 630 - 0701, www.masonwest.com

Jiefu "Jeff" Zhang, SE
California SE No. S5270

PAGE
A14.1

ALTERNATE ARRANGEMENT OF SEISMIC BRACES FOR PIPING ON TRAPEZE

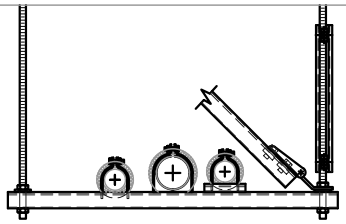

ELEVATION VIEW
SOLID BRACE INSTALLED
IN-BETWEEN HANGERS
(TRANSVERSE OR
ALL-DIRECTIONAL BRACE)

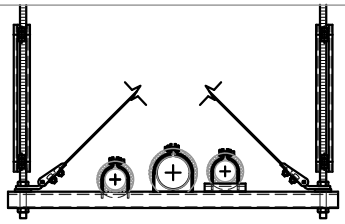

ELEVATION VIEW
CABLE BRACE INSTALLED
IN-BETWEEN HANGERS

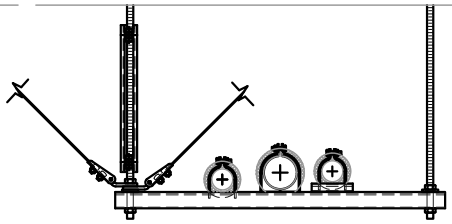

ELEVATION VIEW
CABLE BRACE INSTALLED AT
SINGLE HANGER
(TRANSVERSE BRACES ONLY)

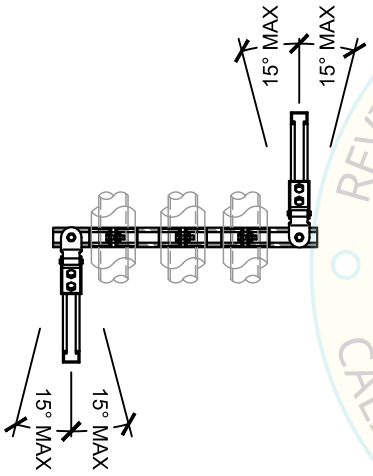

PLAN VIEW
LONGITUDINAL SOLID BRACES INSTALLED
IN ALTERNATING DIRECTIONS

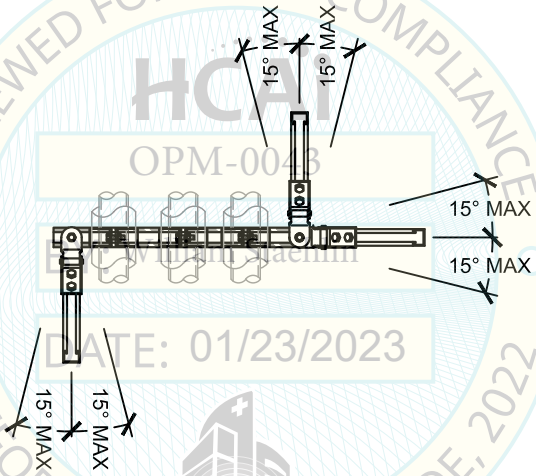

PLAN VIEW
ALL-DIRECTIONAL SOLID BRACES INSTALLED
IN ALTERNATING DIRECTIONS

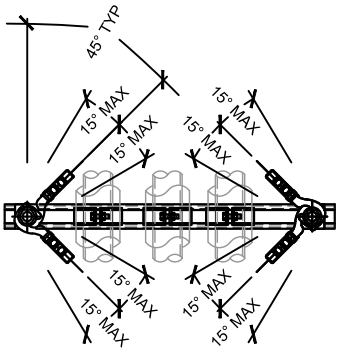

PLAN VIEW
CABLE X-PATTERN BRACE INSTALLED
IN-BETWEEN HANGERS

REVIEWED FOR CODE COMPLIANCE
HCAI
OPM-0043
Reviewed by William Staehlin
DATE: 01/23/2023
CALIFORNIA BUILDING CODE, 2022

NOTES:
1) REFER TO APPROPRIATE DETAIL F PAGES FOR DIMENSIONS AND NOTATIONS NOT SHOWN.

MASON WEST
1601 E. Miraloma Ave. Placentia, CA 92870
TEL (714) 630 - 0701, www.masonwest.com

Jiefu "Jeff" Zhang, SE
California SE No. S5270

PAGE
A15.0

ALTERNATE ARRANGEMENT OF SEISMIC BRACES FOR PIPING ON TRAPEZE

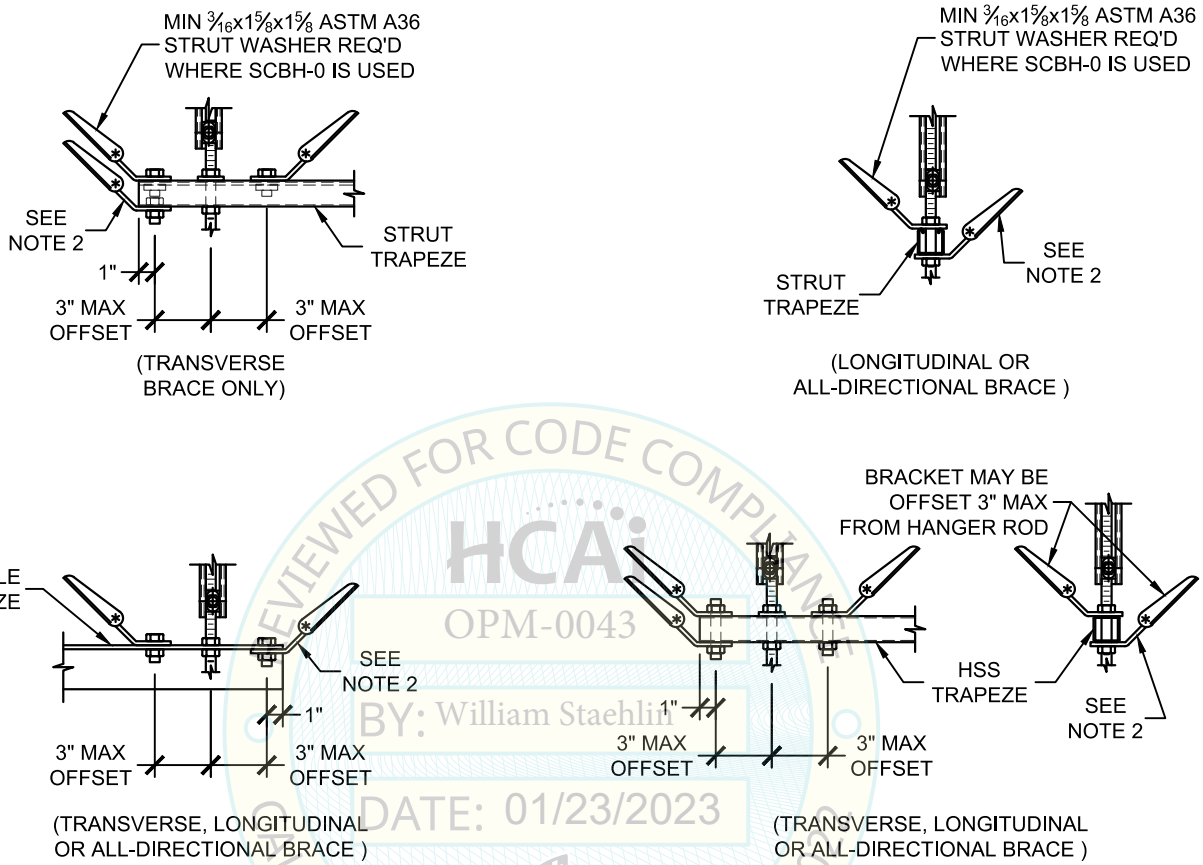

SEISMIC BRACE BRACKET OFFSET FROM HANGER RODS

REVIEWED FOR CODE COMPLIANCE
HCAi
OPM-0043
BY: William Staehlin
DATE: 01/23/2023
CALIFORNIA BUILDING CODE, 2022

NOTES:
1) REFER TO APPROPRIATE DETAIL F PAGES FOR DIMENSIONS AND NOTATIONS NOT SHOWN.
2) WHEN INSTALLING SHB TO BOTTOM OF TRAPEZE, MW-KY SHB KEY IS REQ'D (REF. X2.4).

MASON WEST
1601 E. Miraloma Ave. Placentia, CA 92870
TEL (714) 630 - 0701, www.masonwest.com

Jiefu "Jeff" Zhang, SE
California SE No. S5270

PAGE
A15.1

ALTERNATE ARRANGEMENT OF SEISMIC BRACES FOR INDIVIDUALLY SUSPENDED STEEL PIPING

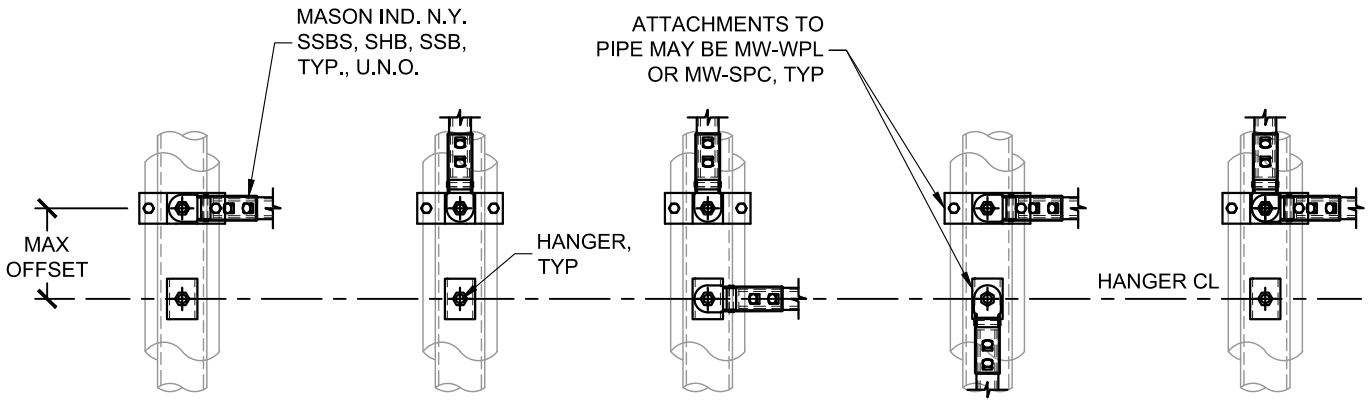

PLAN VIEW
TRANSVERSE SOLID BRACE OFFSET FROM HANGER

PLAN VIEW
LONGITUDINAL SOLID BRACE OFFSET FROM HANGER

PLAN VIEW
ALL-DIRECTIONAL SOLID BRACE W/ LONGITUDINAL BRACE OFFSET FROM HANGER

PLAN VIEW
ALL-DIRECTIONAL SOLID BRACE W/ TRANSVERSE BRACE OFFSET FROM HANGER

PLAN VIEW
ALL-DIRECTIONAL SOLID BRACE OFFSET FROM HANGER

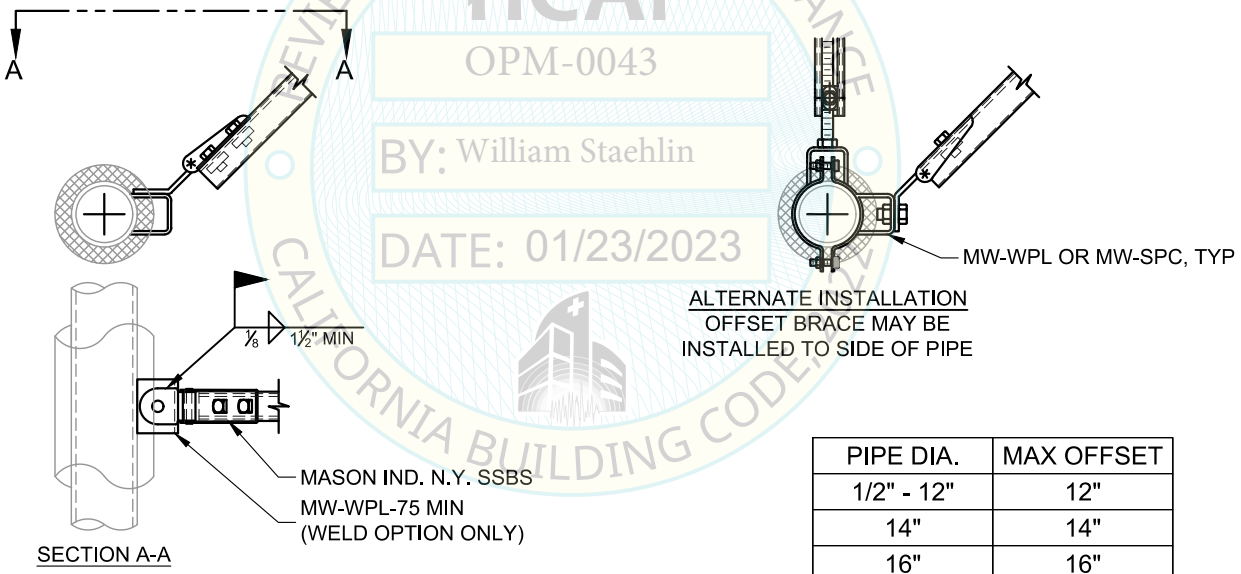

SECTION A-A

ALTERNATE WITH WELD OPTION
TRANSVERSE SOLID BRACE INSTALLED TO SIDE OF PIPE

ALTERNATE INSTALLATION
OFFSET BRACE MAY BE INSTALLED TO SIDE OF PIPE

PIPE DIA.	MAX OFFSET
1/2" - 12"	12"
14"	14"
16"	16"
18"	18"
20"	20"
24"	22"

REVIEWED FOR CODE COMPLIANCE
HCAi
OPM-0043
BY: William Staehlin
DATE: 01/23/2023
CALIFORNIA BUILDING CODE

NOTES:
1) REFER TO APPROPRIATE DETAIL C PAGES FOR DIMENSIONS AND NOTATIONS NOT SHOWN.
2) MAX OFFSETS ARE BASED ON STEEL PIPE CONFORMING TO ASTM SPECIFICATION A53, TYPE E, GRADE B WITH MINIMUM Fy = 35 ksi AND S_A = 14.6 ksi AT MAXIMUM OPERATING PRESSURE AND TEMPERATURE OF 400 psi and 650°F, RESPECTIVELY.

MASON WEST
1601 E. Miraloma Ave. Placentia, CA 92870
TEL (714) 630 - 0701, www.masonwest.com

Jiefu "Jeff" Zhang, SE
California SE No. S5270

PAGE
A15.2

ALTERNATE ARRANGEMENT OF SEISMIC BRACES FOR INDIVIDUALLY SUSPENDED STEEL PIPING

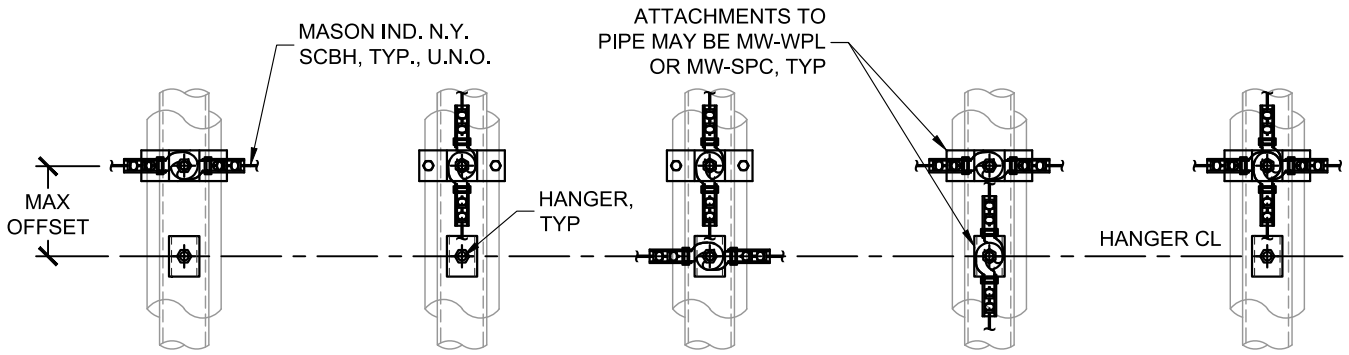

PLAN VIEW
TRANSVERSE CABLE BRACE OFFSET FROM HANGER

PLAN VIEW
LONGITUDINAL CABLE BRACE OFFSET FROM HANGER

PLAN VIEW
ALL-DIRECTIONAL CABLE BRACE W/ LONGITUDINAL BRACE OFFSET FROM HANGER

PLAN VIEW
ALL-DIRECTIONAL CABLE BRACE W/ TRANSVERSE BRACE OFFSET FROM HANGER

PLAN VIEW
ALL-DIRECTIONAL CABLE BRACE OFFSET FROM HANGER

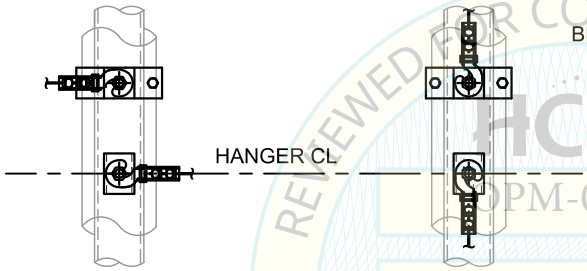

PLAN VIEW
TRANSVERSE CABLE BRACE W/ (1) CABLE BRACE OFFSET FROM HANGER

PLAN VIEW
LONGITUDINAL CABLE BRACE W/ (1) CABLE BRACE OFFSET FROM HANGER

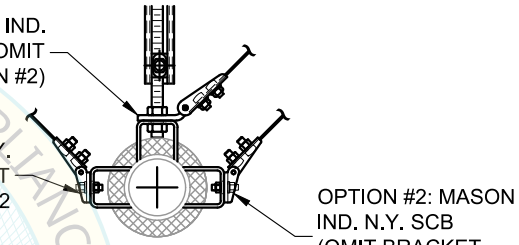

TRANSVERSE CABLE BRACE ALTERNATE INSTALLATION
OFFSET BRACE MAY BE INSTALLED TO SIDE OF PIPE

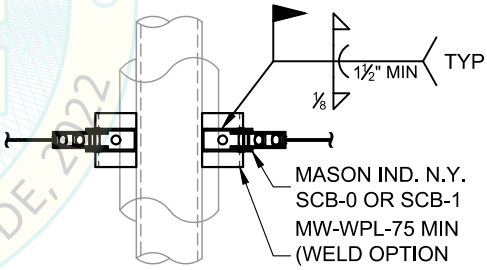

ALTERNATE WITH WELD OPTION

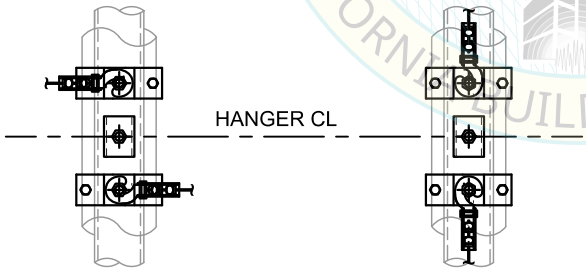

PLAN VIEW
TRANSVERSE CABLE BRACE W/ (2) CABLE BRACES OFFSET FROM HANGER

PLAN VIEW
LONGITUDINAL CABLE BRACE W/ (2) CABLE BRACES OFFSET FROM HANGER

PIPE DIA.	MAX OFFSET
1/2" - 12"	12"
14"	14"
16"	16"
18"	18"
20"	20"
24"	22"

NOTES:
1) REFER TO APPROPRIATE DETAIL C PAGES FOR DIMENSIONS AND NOTATIONS NOT SHOWN.
2) MAX OFFSETS ARE BASED ON STEEL PIPE CONFORMING TO ASTM SPECIFICATION A53, TYPE E, GRADE B WITH MINIMUM Fy = 35 ksi AND S_A = 14.6 ksi AT MAXIMUM OPERATING PRESSURE AND TEMPERATURE OF 400 psi and 650°F, RESPECTIVELY.

REVIEWED FOR CODE COMPLIANCE
HCAI
OPM-0043
BY: William Staehlin
DATE: 1/23/2023
CALIFORNIA BUILDING CODE, 2022

MASON WEST
1601 E. Miraloma Ave. Placentia, CA 92870
TEL (714) 630 - 0701, www.masonwest.com

Jiefu "Jeff" Zhang, SE
California SE No. S5270

PAGE
A15.3

ALTERNATE ARRANGEMENT OF SEISMIC BRACES FOR INDIVIDUALLY SUSPENDED CAST IRON PIPING

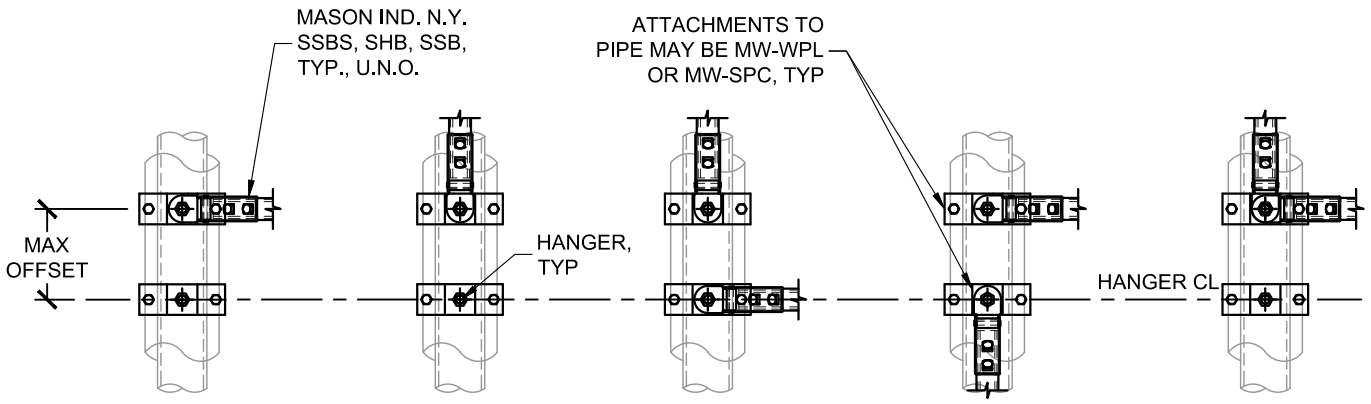

PLAN VIEW
TRANSVERSE SOLID BRACE OFFSET FROM HANGER

PLAN VIEW
LONGITUDINAL SOLID BRACE OFFSET FROM HANGER

PLAN VIEW
ALL-DIRECTIONAL SOLID BRACE W/ LONGITUDINAL BRACE OFFSET FROM HANGER

PLAN VIEW
ALL-DIRECTIONAL SOLID BRACE W/ TRANSVERSE BRACE OFFSET FROM HANGER

PLAN VIEW
ALL-DIRECTIONAL SOLID BRACE OFFSET FROM HANGER

HCAi
OPM-0043
BY: William Staehlin
DATE: 01/23/2023
REVIEWED FOR CODE COMPLIANCE
CALIFORNIA BUILDING CODE

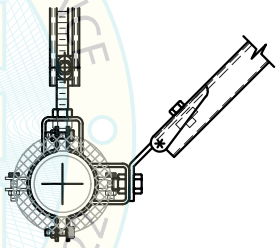

ALTERNATE INSTALLATION
OFFSET BRACE MAY BE INSTALLED TO SIDE OF PIPE

PIPE DIA.	MAX OFFSET
2" - 3"	10"
4" - 12"	12"

NOTES:
1) REFER TO APPROPRIATE DETAIL C PAGES FOR DIMENSIONS AND NOTATIONS NOT SHOWN.
2) MAX OFFSETS ARE BASED ON CAST IRON PIPE CONSTRUCTED TO ASTM A 888 OR CISPI 301 STANDARDS WITH A MINIMUM TENSILE STRENGTH OF 21,000 PSI.

MASON WEST
1601 E. Miraloma Ave. Placentia, CA 92870
TEL (714) 630 - 0701, www.masonwest.com

Jiefu "Jeff" Zhang, SE
California SE No. S5270

PAGE
A15.4

ALTERNATE ARRANGEMENT OF SEISMIC BRACES FOR INDIVIDUALLY SUSPENDED CAST IRON PIPING

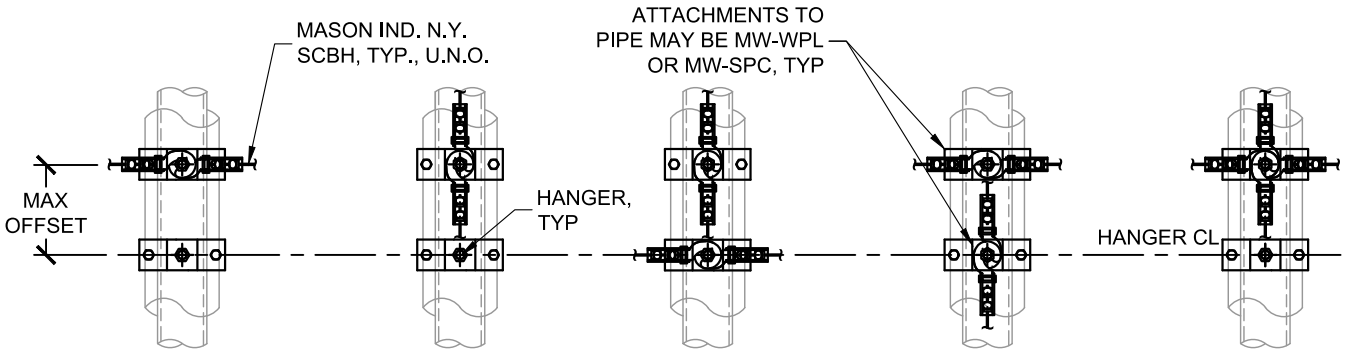

PLAN VIEW
TRANSVERSE CABLE BRACE OFFSET FROM HANGER

PLAN VIEW
LONGITUDINAL CABLE BRACE OFFSET FROM HANGER

PLAN VIEW
ALL-DIRECTIONAL CABLE BRACE W/ LONGITUDINAL BRACE OFFSET FROM HANGER

PLAN VIEW
ALL-DIRECTIONAL CABLE BRACE W/ TRANSVERSE BRACE OFFSET FROM HANGER

PLAN VIEW
ALL-DIRECTIONAL CABLE BRACE OFFSET FROM HANGER

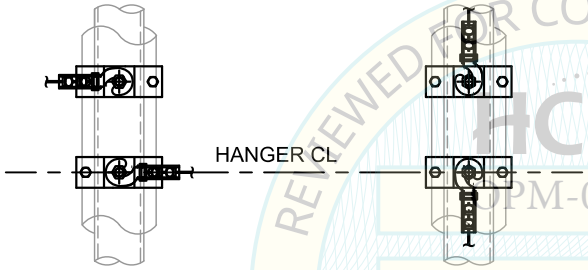

PLAN VIEW
TRANSVERSE CABLE BRACE W/ (1) CABLE BRACE OFFSET FROM HANGER

PLAN VIEW
LONGITUDINAL CABLE BRACE W/ (1) CABLE BRACE OFFSET FROM HANGER

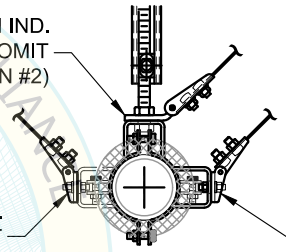

TRANSVERSE CABLE BRACE
ALTERNATE INSTALLATION
OFFSET BRACE MAY BE INSTALLED TO SIDE OF PIPE

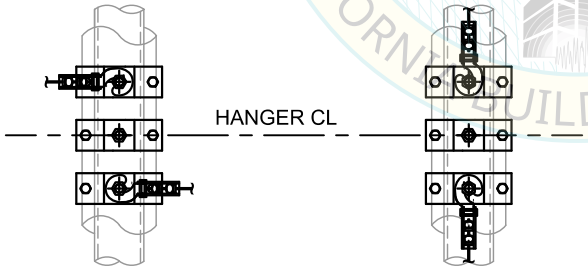

PLAN VIEW
TRANSVERSE CABLE BRACE W/ (2) CABLE BRACES OFFSET FROM HANGER

PLAN VIEW
LONGITUDINAL CABLE BRACE W/ (2) CABLE BRACES OFFSET FROM HANGER

PIPE DIA.	MAX OFFSET
2" - 3"	10"
4" - 12"	12"

NOTES:
1) REFER TO APPROPRIATE DETAIL C PAGES FOR DIMENSIONS AND NOTATIONS NOT SHOWN.
2) MAX OFFSETS ARE BASED ON CAST IRON PIPE CONSTRUCTED TO ASTM A 888 OR CISPI 301 STANDARDS WITH A MINIMUM TENSILE STRENGTH OF 21,000 PSI.

REVIEWED FOR CODE COMPLIANCE
HCAI
OPM-0043
BY: William Staehlin
DATE: 1/23/2023
CALIFORNIA BUILDING CODE, 2022

MASON WEST
1601 E. Miraloma Ave. Placentia, CA 92870
TEL (714) 630 - 0701, www.masonwest.com

Jiefu "Jeff" Zhang, SE
California SE No. S5270

PAGE
A15.5

ATTACHMENT OPTIONS FOR PIPING ON TRAPEZE MEMBERS FOR TRANSVERSE, LONGITUDINAL, AND ALL-DIRECTIONAL BRACING SYSTEMS

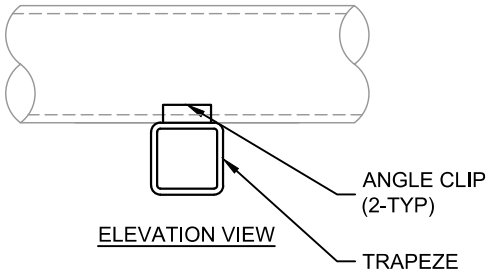

ELEVATION VIEW

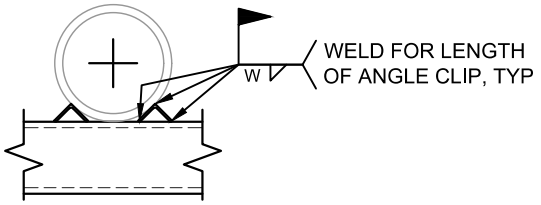

SECTION VIEW

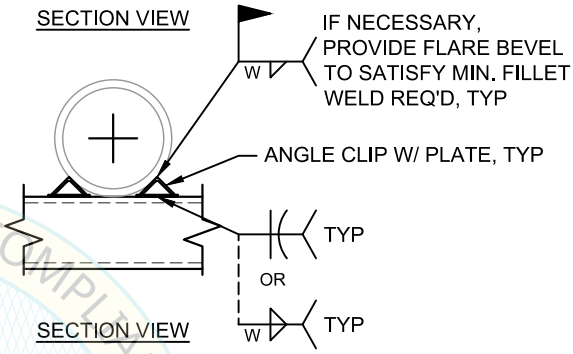

SECTION VIEW

PIPE SIZE	ANGLE CLIP SIZE[2]	WITH PLATE OPTION[2]	w, MIN WELD SIZE	MAX Fp[1] FORCE (lbs)
2½"-3"Ø	L1x1x⅛, 1" LG.	N/A	⅛"	1630
4"-5"Ø		PL3/16x2x1		
6"-8"Ø	L2x2x¼, 2" LG.	PL¼x3½x2	3/16"	2625
10"-18"Ø	L3x3x⅜, 3" LG.	PL½x5¼x3	¼"	11250
20"-30"Ø	L4x4x⅜, 5" LG.	PL⅝x7x4		19795

1. MAX Fp FORCES ARE THE WORST CASE FOR SINGLE DIRECTION LOADING.
2. ASTM A36, Fy = 36 KSI (STEEL ANGLES AND PLATES)

WELDED ANGLE CLIPS

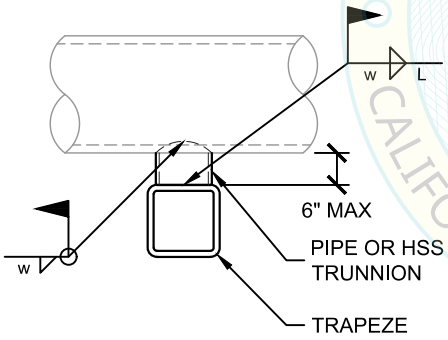

ELEVATION VIEW

STEEL PIPE (STANDARD SCHEDULE)[1, 2, 3, 4]						
PIPE SIZE	MAX TRANSVERSE Fp[4] (lbs)	MAX LONGITUDINAL Fp (lbs)	TRUNNION		w, MIN WELD SIZE	L, WELD LENGTH
			PIPE OPTION	HSS OPTION		
2½"Ø	240	870	1½" STD.	HSS2x2x¼	⅛"	2"
3"-4"Ø	380					
5"Ø	870					
6"-8"Ø	1600	4410	3" STD.	HSS3x3x¼	3/16"	2"
10"-12"Ø	4630	9670	4" STD.	HSS4x4x¼	¼"	3"
14"Ø	3770					
16"-18"Ø	4350					
20"Ø	5460	14630	5" STD.	HSS4x4x⅜	¼"	4"
24"Ø	6350					
30"Ø	7440					

1. MAX Fp FORCES ARE BASED ON STEEL PIPE CONFORMING TO ASTM SPECIFICATION A53, TYPE E, GRADE B WITH MINIMUM Fy = 35 ksi. FOR ASTM A53, TYPE E, GRADE A WITH MINIMUM Fy=30 ksi, REDUCE TRANSVERSE Fp FORCE ONLY BY A FACTOR OF 1.20 UP TO 14"Ø PIPE, 1.33 UP TO 30"Ø PIPE.
2. THE MAX Fp FORCES SHOWN ABOVE MAY BE USED FOR SCH. 80 STEEL PIPE.
3. FOR SCH. 10 STEEL PIPE, THE REGISTERED DESIGN PROFESSIONAL (RDP) SHALL DETERMINE THE MAX ALLOWABLE Fp FORCES.
4. FOR PIPE TRUNNION OPTION, THE BRACE SPACING SHALL NOT EXCEED 40'-0" MAX FOR TRANSVERSE BRACING SYSTEMS.
5. ASTM A53, GRADE B, Fy = 35 KSI (PIPE TRUNNION) OR ASTM A500, GRADE B, Fy = 46 KSI (HSS TRUNNION)

PIPE TRUNNION

REVIEWED FOR CODE COMPLIANCE
OPM-0043
BY: William Staehlin
DATE: 01/23/2023
CALIFORNIA BUILDING CODE, 2022
ICAi

MASON WEST
1601 E. Miraloma Ave. Placentia, CA 92870
TEL (714) 630 - 0701, www.masonwest.com

Jiefu "Jeff" Zhang, SE
California SE No. S5270

PAGE
A16.0

ATTACHMENT OPTIONS FOR PIPING ON TRAPEZE MEMBERS FOR TRANSVERSE, LONGITUDINAL, AND ALL-DIRECTIONAL BRACING SYSTEMS

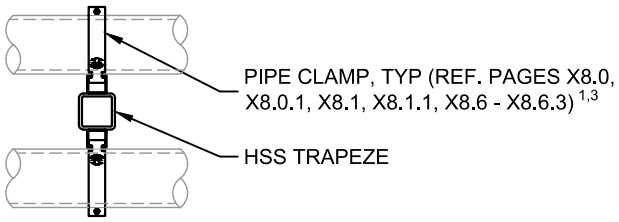

SIDE ELEVATION VIEW

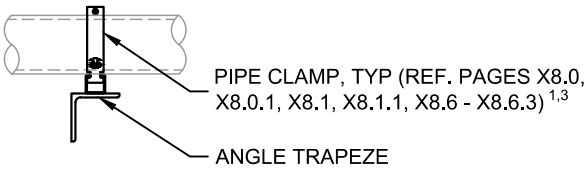

SIDE ELEVATION VIEW

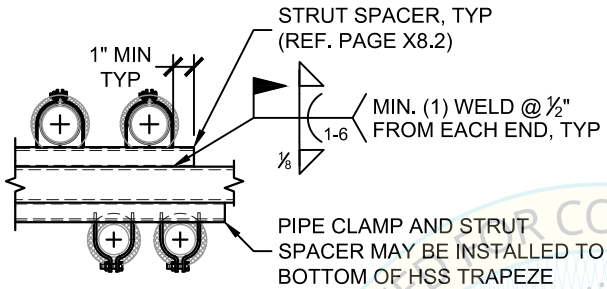

FRONT ELEVATION VIEW

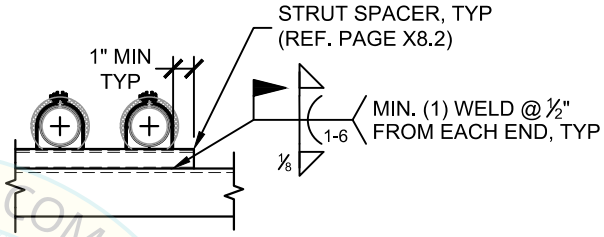

FRONT ELEVATION VIEW

MASON WEST MW-SSC, MW-SCC, AND MW-SCCI PIPE CLAMPS

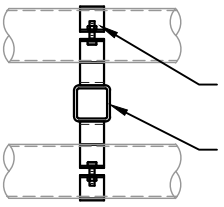

SIDE ELEVATION VIEW

PIPE SIZE	D, BOLT DIAMETER	w, MIN WELD SIZE
1¼"-2"Ø	⅜"	⅛"
2½"-3"Ø	½"	3⁄16"
4"-5"Ø	⅝"	3⁄16"
6"-12"Ø	¾"	¼"

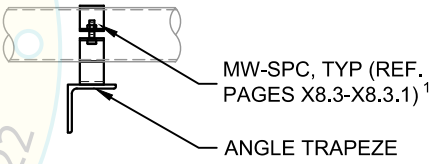

SIDE ELEVATION VIEW

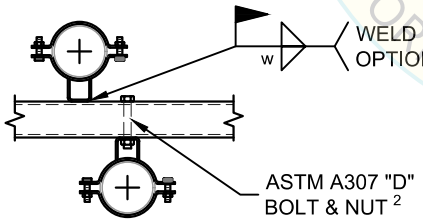

FRONT ELEVATION VIEW

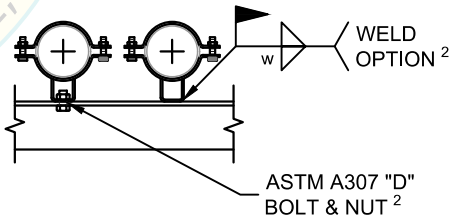

FRONT ELEVATION VIEW

MASON WEST MW-SPC PIPE CLAMPS

NOTES:

1) PIPE CLAMPS MAY BE USED FOR TRANSVERSE, LONGITUDINAL, OR ALL-DIRECTIONAL BRACING SYSTEMS. REF. APPROPRIATE X8 PAGES FOR MAX Fp FORCES.
2) RDP SHALL VERIFY THE SUPPORTING TRAPEZE HAS SUFFICIENT STRENGTH AND STEEL WIDTH FOR WELD AND BOLT ATTACHMENT OPTIONS
3) MASON WEST TYPE MW-SCCI PIPE CLAMPS MAY ONLY BE USED AT TRANSVERSE LOCATIONS.

MASON WEST
1601 E. Miraloma Ave. Placentia, CA 92870
TEL (714) 630 - 0701, www.masonwest.com

Jiefu "Jeff" Zhang, SE
California SE No. S5270

PAGE
A16.1

HCAi
REVIEWED FOR CODE COMPLIANCE
OPM-0043
BY: William Staehlin
DATE: 01/23/2023
CALIFORNIA BUILDING CODE, 2022

ATTACHMENT OPTIONS FOR PIPING ON TRAPEZE MEMBERS FOR LONGITUDINAL BRACING SYSTEMS

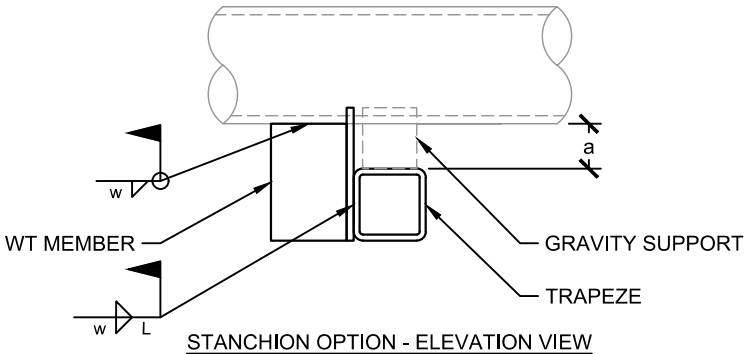

STANCHION OPTION - ELEVATION VIEW

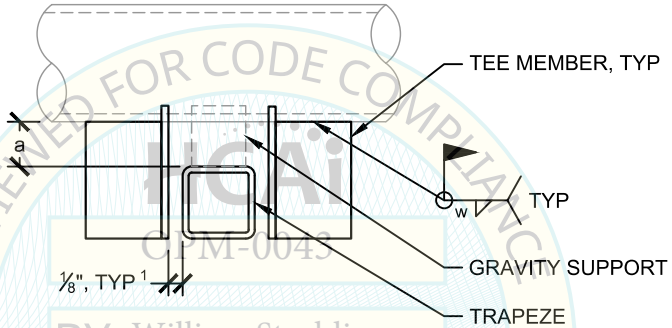

STOPPER OPTION - ELEVATION VIEW

STEEL PIPE (STANDARD SCHEDULE) [1, 2]						
PIPE SIZE	WT SIZE	w, MIN WELD SIZE	L, WELD LENGTH	MAX Fp FORCE (lbs)		
				a = 12" MAX	a = 8" MAX	a = 4" MAX
2½"-3"Ø	MT3x2.2	⅛"	2"	320	440	690
4"-5"Ø	WT3x6	3/16"	2"	810	1100	1730
6"-8"Ø	WT4x7.5	¼"	3"	1530	2090	3290
10"-18"Ø	WT6x13	¼"	4"	2840	3880	6100
20"-30"Ø	WT8x20	¼"	4"	6490	8850	13920

TEE MEMBER STANCHION OR STOPPER OPTION

NOTES:
1) THE MAX Fp FORCES SHOWN ABOVE MAY BE USED FOR SCH. 80 STEEL PIPE. FOR SCH. 10 STEEL PIPE, THE REGISTERED DESIGN PROFESSIONAL (RDP) SHALL DETERMINE THE MAX ALLOWABLE Fp FORCES.
2) GAP MAY INCREASE FOR JOB SPECIFIC THERMAL DESIGN.
3) ASTM A36, Fy = 36 KSI (WT SHAPES)

MASON WEST
1601 E. Miraloma Ave. Placentia, CA 92870
TEL (714) 630 - 0701, www.masonwest.com

Jiefu "Jeff" Zhang, SE
California SE No. S5270

PAGE
A16.2

REVIEWED FOR CODE COMPLIANCE
HCAi
OPM-0043
DATE: 1/23/2023
BY: William Staehlin
CALIFORNIA BUILDING CODE

ATTACHMENT OPTIONS FOR PIPING ON TRAPEZE MEMBERS FOR TRANSVERSE BRACING SYSTEMS

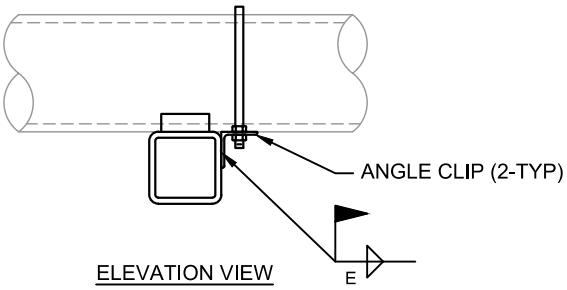

ELEVATION VIEW

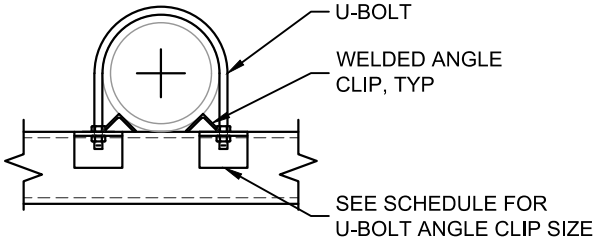

SECTION VIEW

PIPE SIZE	U-BOLT DIA	U-BOLT ANGLE CLIP SIZE	E, WELD SIZE	MAX Fp FORCE (lbs)
2½"-5"Ø	½"	L3x3x¼, 3" LG	3/16"	1200
6"-8"Ø	⅝"			
10"Ø	¾"	L4x4x⅜, 4" LG	¼"	3960
12"-16"Ø	⅞"	L4x4x½, 4" LG	¼"	4970
18"-30"Ø	1"	L5x5x⅝, 5" LG	¼"	6060

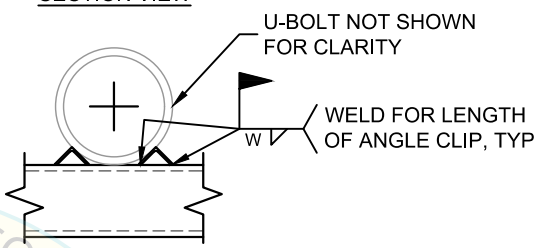

SECTION VIEW: OPTION 1

PIPE SIZE	WELDED ANGLE CLIP SIZE	WITH PLATE OPTION	w, MIN WELD SIZE
2½"-3"Ø	L1x1x⅛, 1" LG.	N/A	⅛"
4"-5"Ø		PL3/16x2x1	
6"-8"Ø	L2x2x¼, 2" LG.	PL¼x3½x2	3/16"
10"-18"Ø	L3x3x⅜, 3" LG.	PL½x5¼x3	¼"
20"-30"Ø	L4x4x⅜, 4" LG.	PL⅝x7x4	¼"

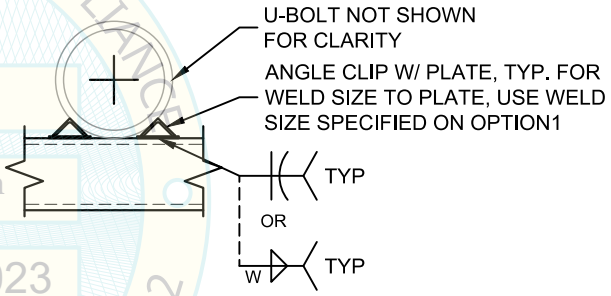

SECTION VIEW: OPTION 2

U-BOLT W/ ANGLE CLIPS [1]

REVIEWED FOR CODE COMPLIANCE HCAi OPM-0043 By: William Staehlin DATE: 01/23/2023 CALIFORNIA BUILDING CODE, 2022

NOTES:
1) U-BOLT W/ ANGLE CLIPS OPTION MAY ONLY BE INSTALLED TO TOP OF TRAPEZE.
2) ASTM A36, Fy = 36 KSI (STEEL ANGLES, PLATES, AND U-BOLTS)

MASON WEST
1601 E. Miraloma Ave. Placentia, CA 92870
TEL (714) 630 - 0701, www.masonwest.com

Jiefu "Jeff" Zhang, SE
California SE No. S5270

PAGE
A16.3

ATTACHMENT OPTIONS FOR PIPING ON TRAPEZE MEMBERS FOR TRANSVERSE BRACING SYSTEMS

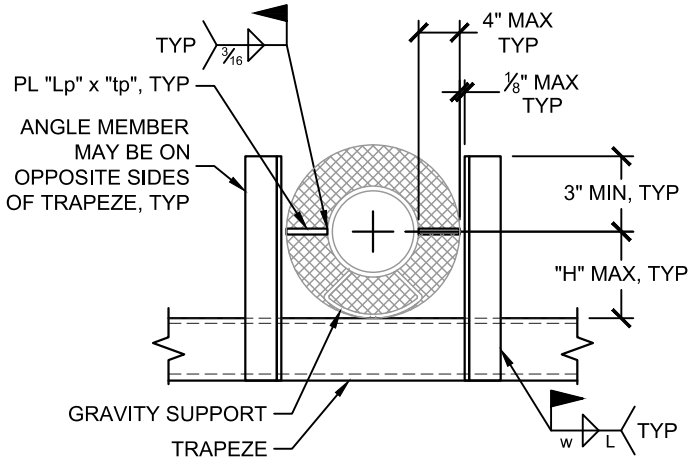

PIPE SIZE	MAX Fp FORCE (lbs)	ANGLE MEMBER	H	w WELD SIZE	L MIN WELD LENGTH	PLATE SIZE	
						Lp	tp
2½"-5"Ø	720	L2x2x¼	9"	⅛"	2"	4"	¼"
6"-8"Ø	1420	L3x3x¼	12"	3/16"	3"	5"	⅜"
10"-18"Ø	1620	L4x4x¼	16"	¼"	4"	6"	
20"-30"Ø	2840	L6x6x⅜	24"	¼"	4"	8"	

ANGLE POST MEMBERS

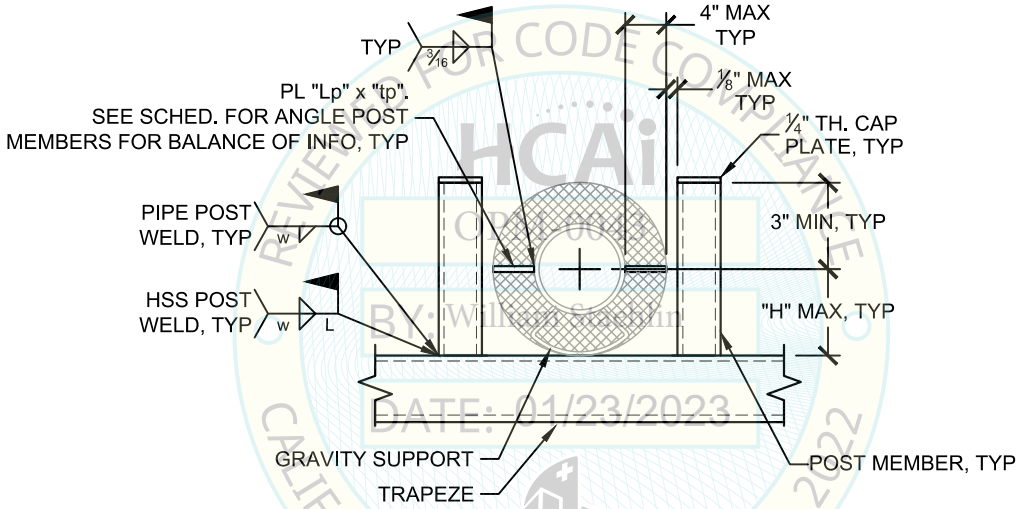

PIPE SIZE	MAX Fp FORCE (lbs)	POST MEMBER		H	w WELD SIZE	L MIN WELD LENGTH
		PIPE OPTION	HSS OPTION			
2½"-5"Ø	580	1½" STD.	HSS2x2x¼	9"	⅛"	2"
6"-8"Ø	2070	3" STD.	HSS3x3x¼	12"	3/16"	3"
10"-18"Ø	3680	4" STD.	HSS4x4x¼	16"	¼"	4"
20"-30"Ø	2460	5" STD.	HSS4x4x⅜	24"	¼"	4"

PIPE OR HSS POST MEMBERS

1. MAX Fp FORCES ARE BASED ON STEEL PIPE CONFORMING TO ASTM SPECIFICATION A53, TYPE E, GRADE B WITH MINIMUM Fy = 35 ksi. FOR ASTM A53, TYPE E, GRADE A WITH MINIMUM Fy=30 ksi, REDUCE TRANSVERSE Fp FORCE ONLY BY A FACTOR OF 1.20 UP TO 14"Ø PIPE, 1.33 UP TO 30"Ø PIPE.
2. THE MAX Fp FORCES SHOWN ABOVE MAY BE USED FOR SCH. 80 STEEL PIPE.
3. FOR SCH. 10 STEEL PIPE, THE REGISTERED DESIGN PROFESSIONAL (RDP) SHALL DETERMINE THE MAX ALLOWABLE Fp FORCES.
4. THE BRACE SPACING SHALL NOT EXCEED 40'-0" MAX FOR TRANSVERSE BRACING SYSTEMS.
5. ASTM A53, GRADE B, Fy = 35 KSI (PIPE POST), ASTM A500, GRADE B, Fy = 46 KSI (HSS POST), OR ASTM A36, Fy = 36 KSI (ANGLE POST)

MASON WEST
1601 E. Miraloma Ave. Placentia, CA 92870
TEL (714) 630 - 0701, www.masonwest.com

Jiefu "Jeff" Zhang, SE
California SE No. S5270

PAGE
A16.4

REVIEWED FOR CODE COMPLIANCE
HCAi
OPM-0043
BY: William Staehlin
DATE: 01/23/2023
CALIFORNIA BUILDING CODE, 2022

SEISMIC SOLID BRACING OFF STRUT HANGER
TRANSVERSE OPTION FOR INDIVIDUALLY SUSPENDED PIPING

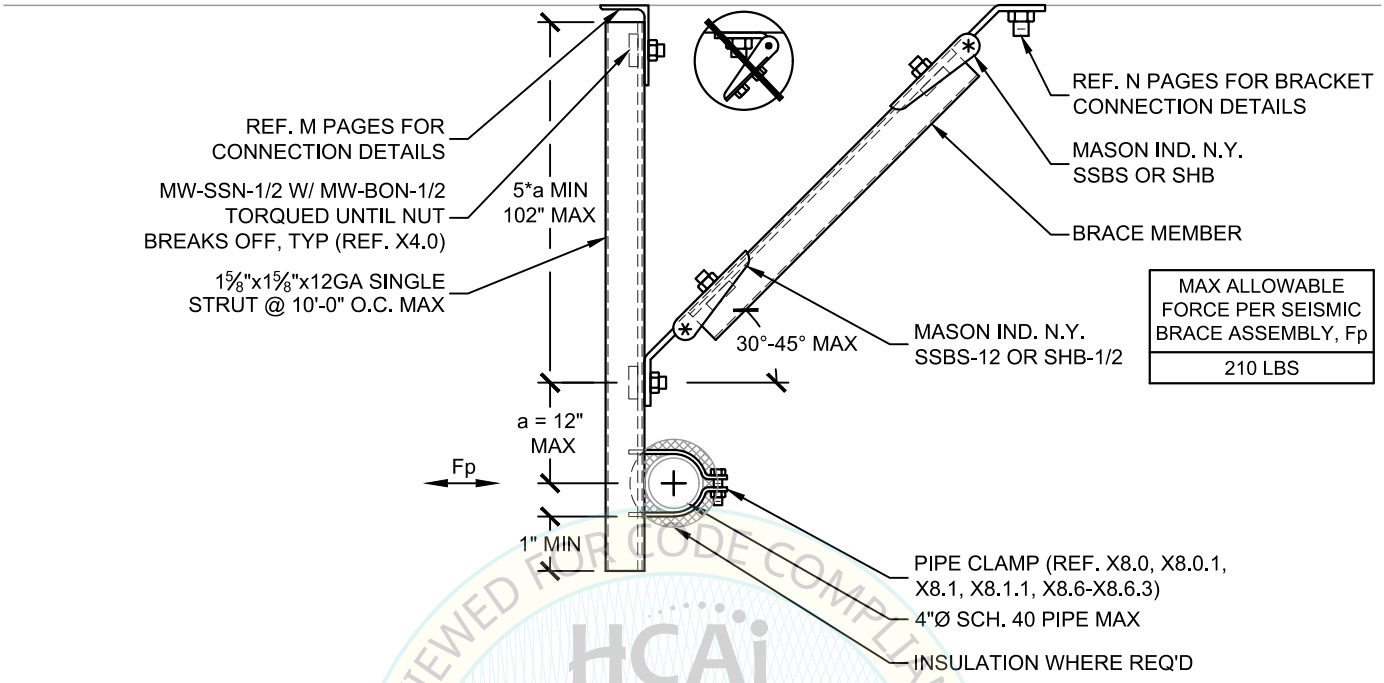

MAX ALLOWABLE FORCE PER SEISMIC BRACE ASSEMBLY, Fp
210 LBS

SINGLE STRUT OPTION

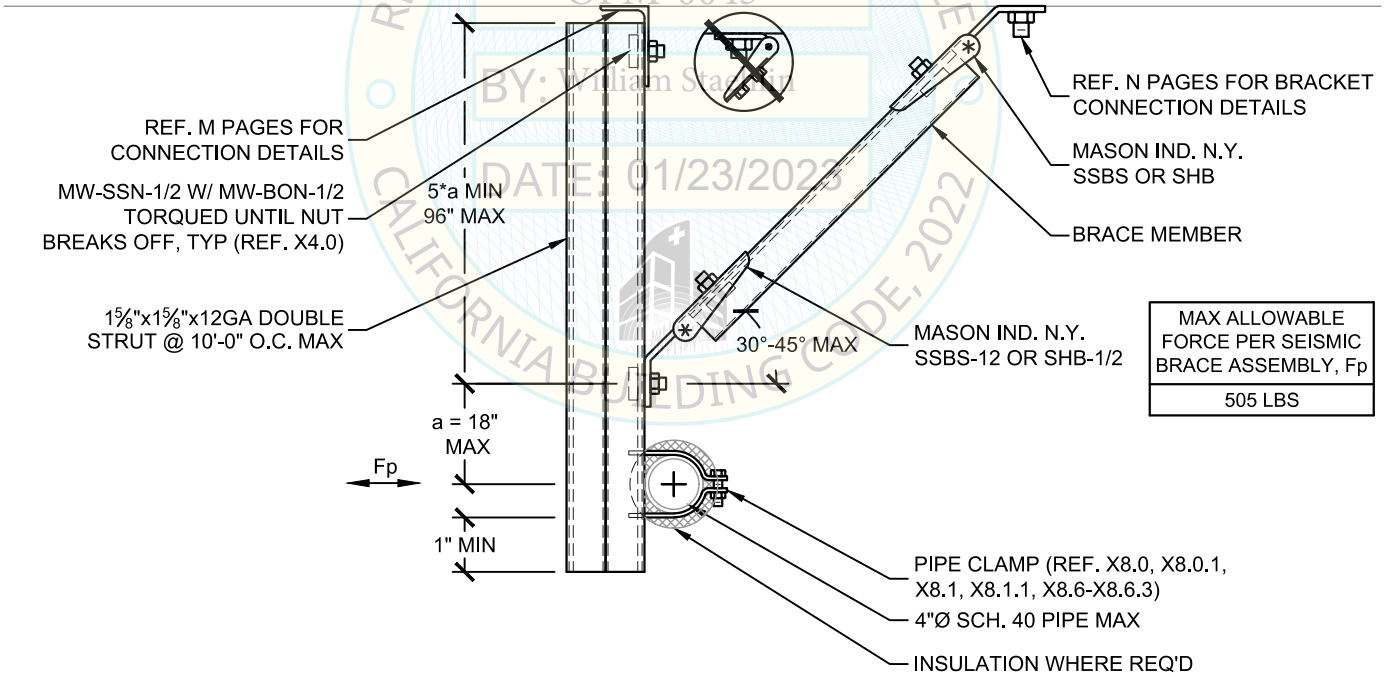

MAX ALLOWABLE FORCE PER SEISMIC BRACE ASSEMBLY, Fp
505 LBS

DOUBLE STRUT OPTION

NOTES:
1) REFER TO APPROPRIATE C PAGES FOR DIMENSIONS AND ANNOTATIONS NOT SHOWN.

HCAi OPM-0043 BY: William Staehlin DATE: 01/23/2023 REVIEWED FOR CODE COMPLIANCE CALIFORNIA BUILDING CODE, 2022

MASON WEST
1601 E. Miraloma Ave. Placentia, CA 92870
TEL (714) 630 - 0701, www.masonwest.com

Jiefu "Jeff" Zhang, SE
California SE No. S5270

PAGE
A18.0

SEISMIC SOLID BRACING OFF STRUT HANGER
LONGITUDINAL OPTION FOR INDIVIDUALLY SUSPENDED PIPING

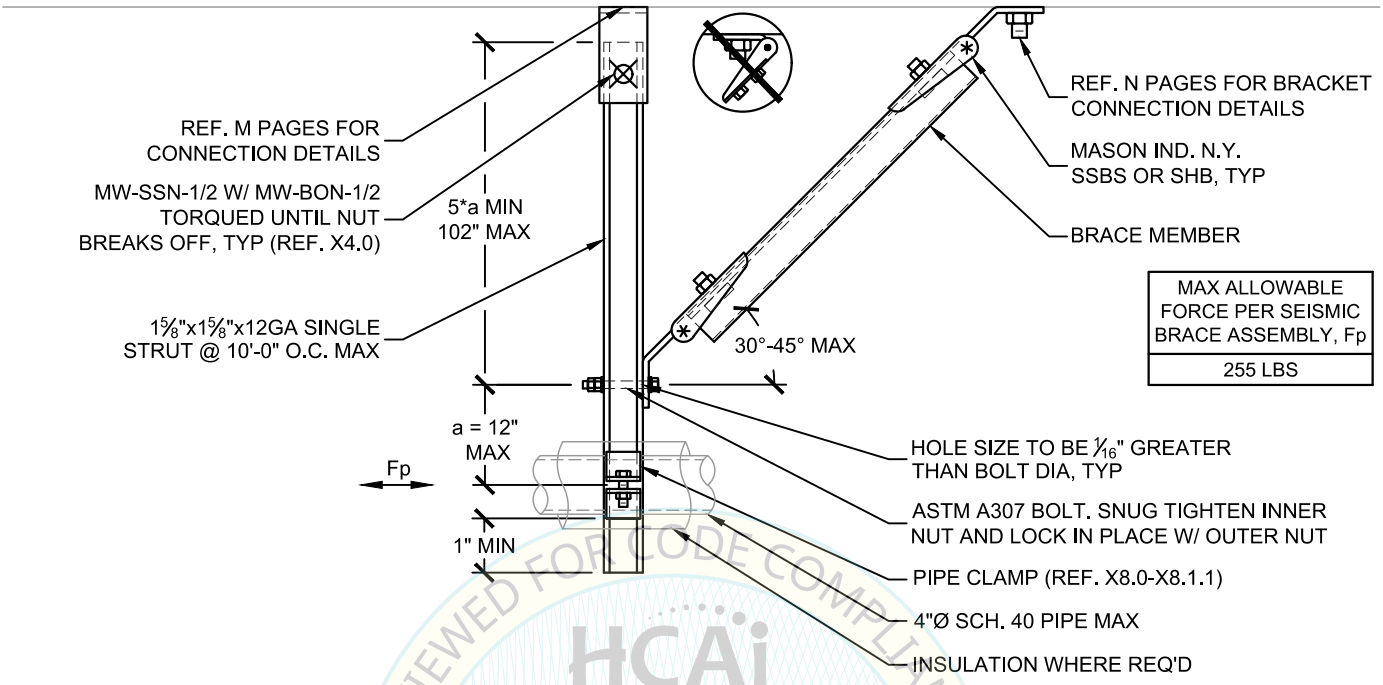

MAX ALLOWABLE FORCE PER SEISMIC BRACE ASSEMBLY, Fp
255 LBS

SINGLE STRUT OPTION

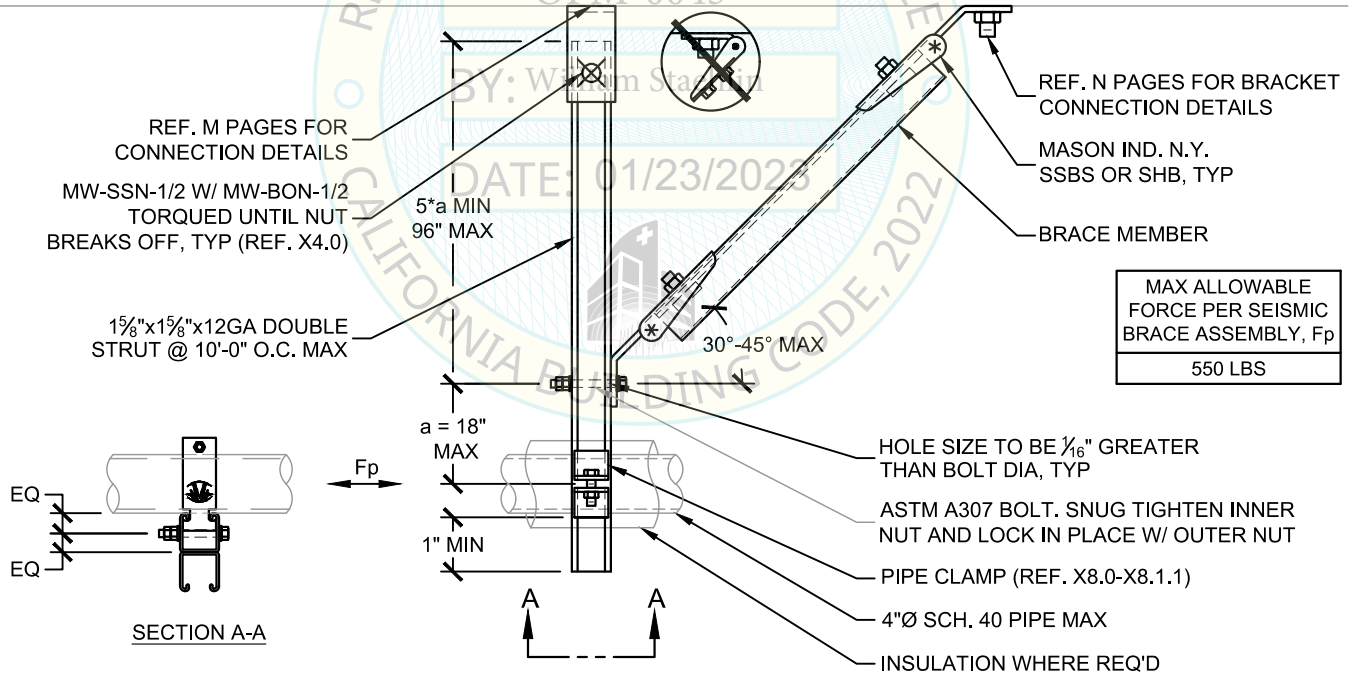

MAX ALLOWABLE FORCE PER SEISMIC BRACE ASSEMBLY, Fp
550 LBS

DOUBLE STRUT OPTION

NOTES:
1) REFER TO APPROPRIATE C PAGES FOR DIMENSIONS AND ANNOTATIONS NOT SHOWN.

HCAi
OPM-0043
BY: William Staehlin
DATE: 01/23/2023
REVIEWED FOR CODE COMPLIANCE
CALIFORNIA BUILDING CODE, 2022

MASON WEST
1601 E. Miraloma Ave. Placentia, CA 92870
TEL (714) 630 - 0701, www.masonwest.com

Jiefu "Jeff" Zhang, SE
California SE No. S5270

PAGE
A18.1

SEISMIC CABLE BRACING OFF STRUT HANGER
TRANSVERSE OPTION FOR INDIVIDUALLY SUSPENDED PIPING

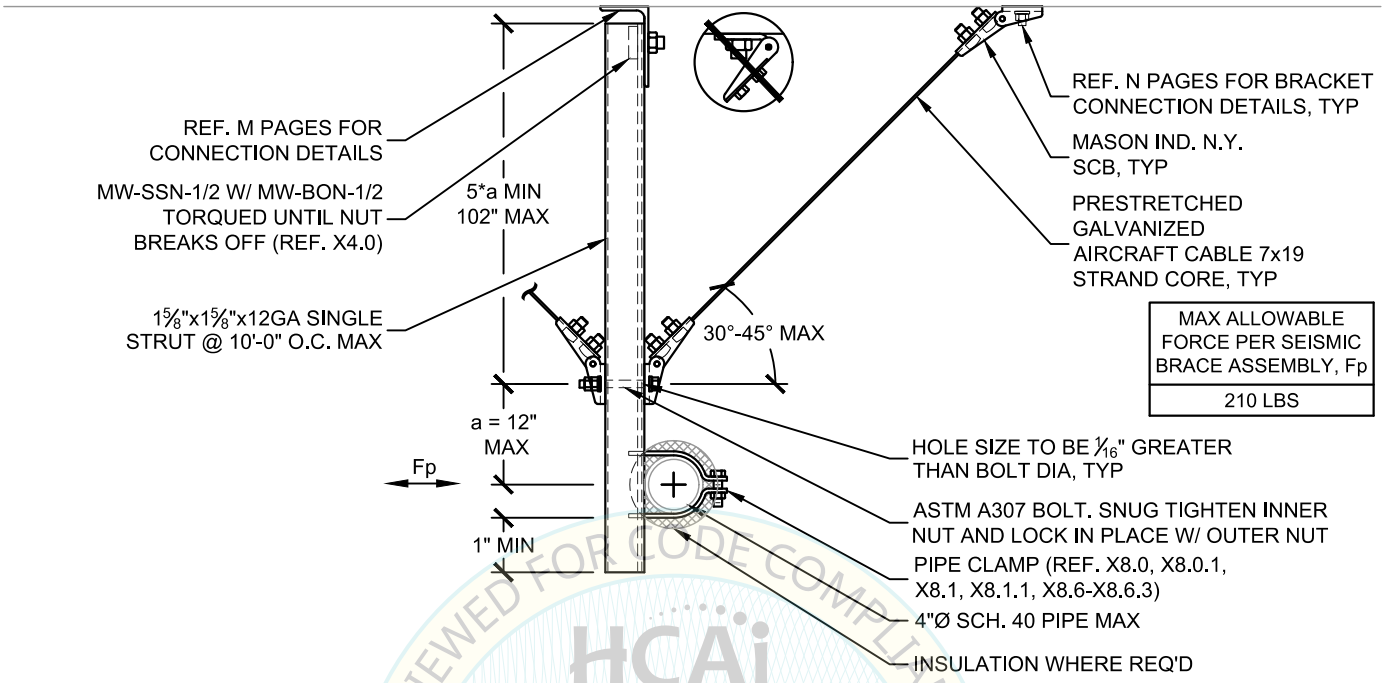

MAX ALLOWABLE FORCE PER SEISMIC BRACE ASSEMBLY, Fp
210 LBS

SINGLE STRUT OPTION

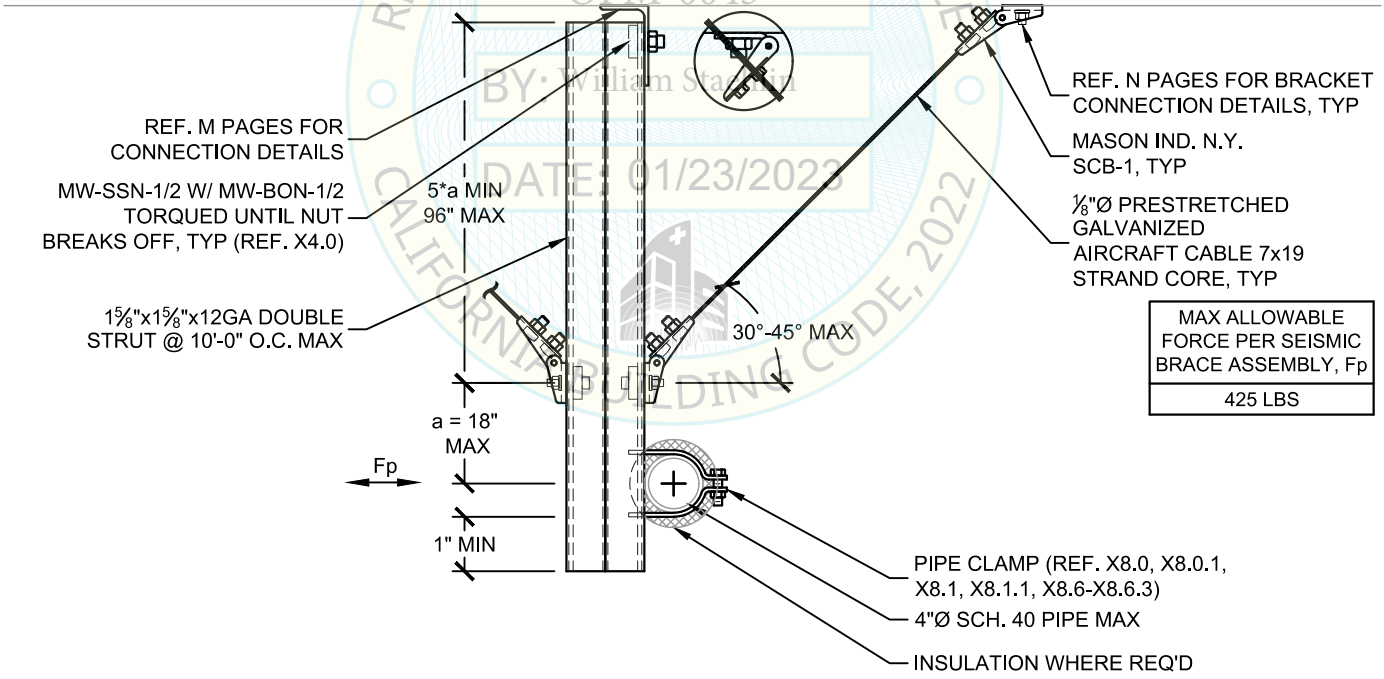

MAX ALLOWABLE FORCE PER SEISMIC BRACE ASSEMBLY, Fp
425 LBS

DOUBLE STRUT OPTION

HCAi
OPM-0043
BY: William Staehlin
DATE: 01/23/2023
REVIEWED FOR CODE COMPLIANCE
CALIFORNIA BUILDING CODE, 2022

NOTES:
1) REFER TO APPROPRIATE C PAGES FOR DIMENSIONS AND ANNOTATIONS NOT SHOWN.

MASON WEST
1601 E. Miraloma Ave. Placentia, CA 92870
TEL (714) 630 - 0701, www.masonwest.com

Jiefu "Jeff" Zhang, SE
California SE No. S5270

PAGE
A18.2

SEISMIC CABLE BRACING OFF STRUT HANGER
LONGITUDINAL OPTION FOR INDIVIDUALLY SUSPENDED PIPING

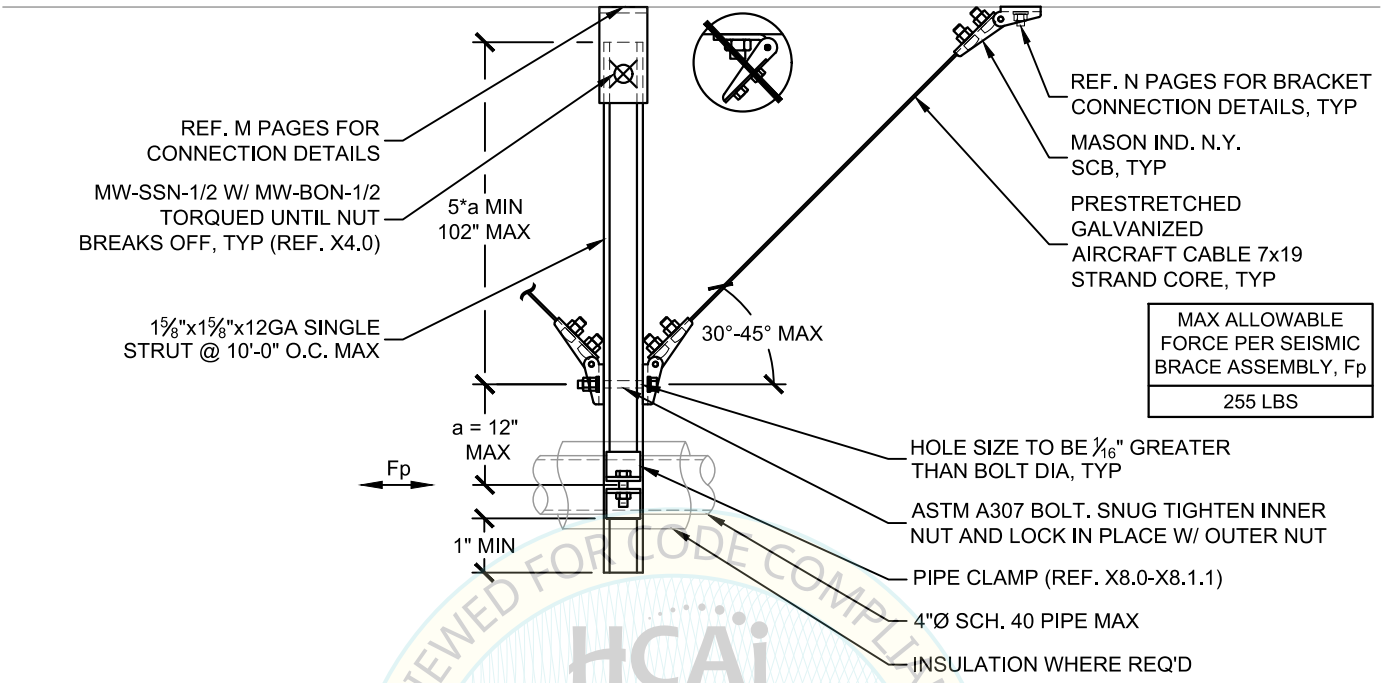

SINGLE STRUT OPTION

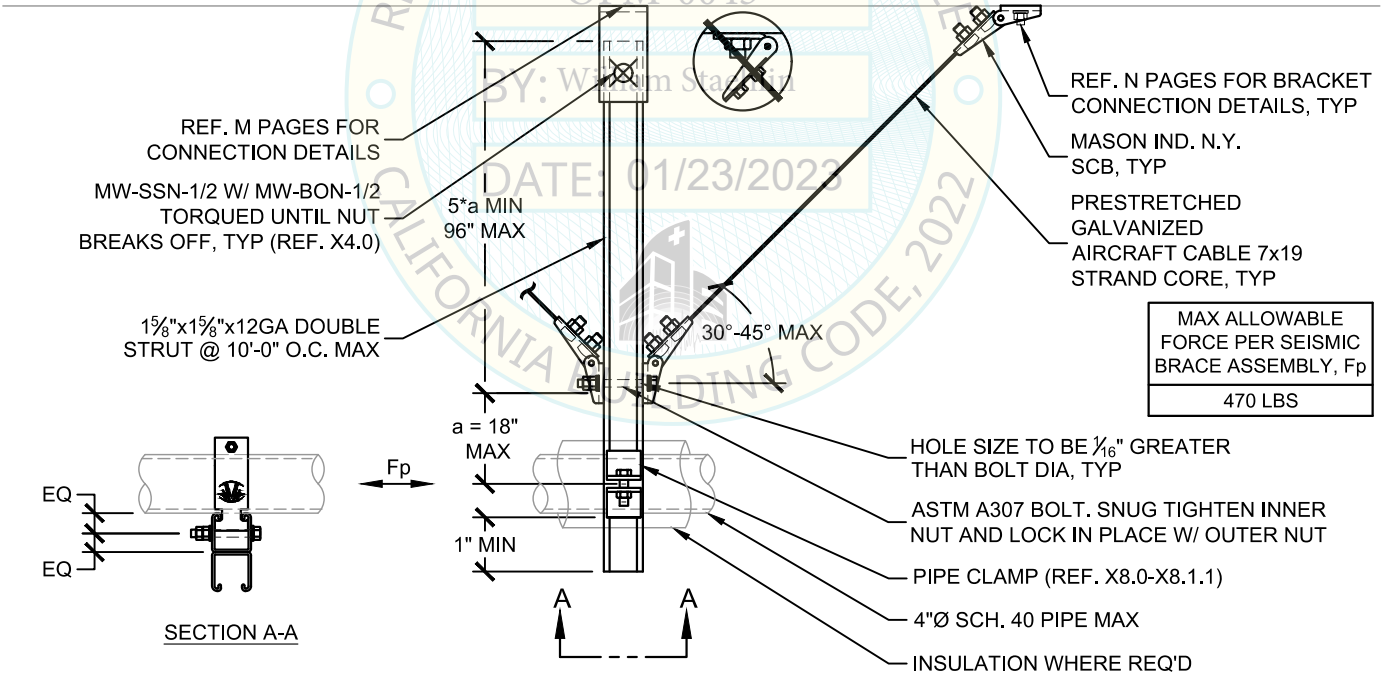

DOUBLE STRUT OPTION

HCAi
OPM-0043
BY: William Staehlin
DATE: 01/23/2023
REVIEWED FOR CODE COMPLIANCE
CALIFORNIA BUILDING CODE, 2022

NOTES:
1) REFER TO APPROPRIATE C PAGES FOR DIMENSIONS AND ANNOTATIONS NOT SHOWN.

MASON WEST
1601 E. Miraloma Ave. Placentia, CA 92870
TEL (714) 630 - 0701, www.masonwest.com

Jiefu "Jeff" Zhang, SE
California SE No. S5270

PAGE
A18.3

SEISMIC SOLID BRACING OFF STRUT HANGER TRANSVERSE OPTION FOR SUSPENDED PIPING ON TRAPEZE

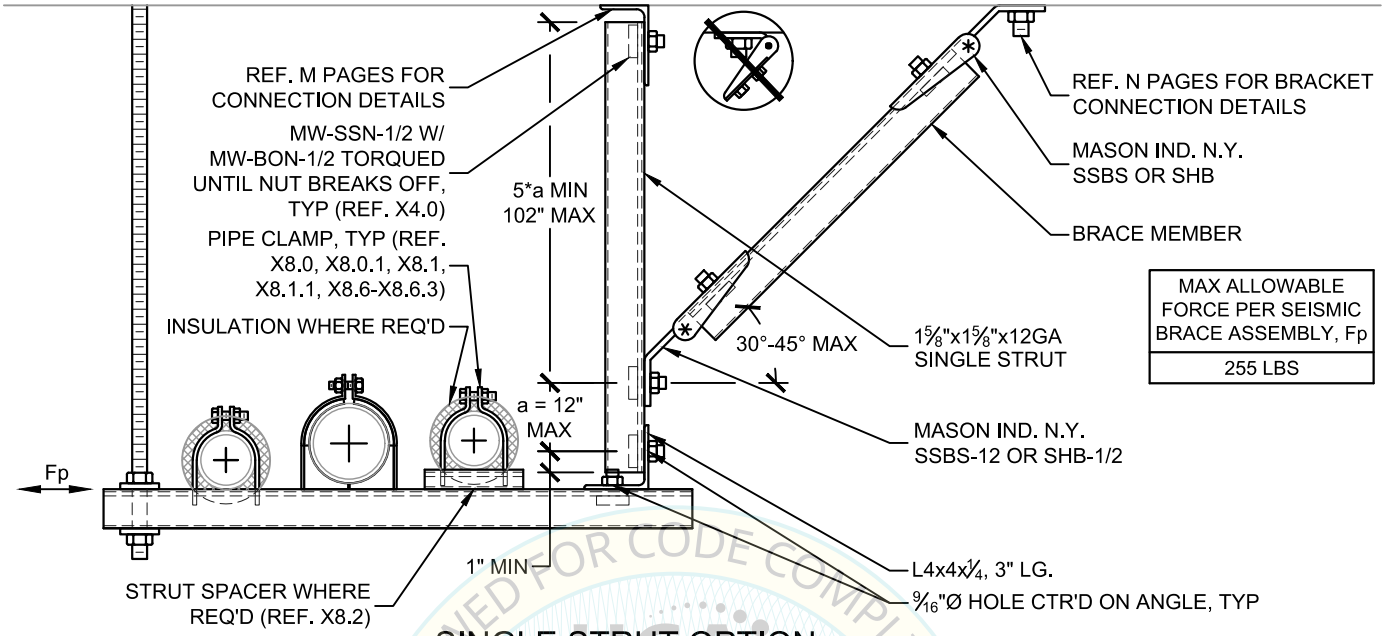

SINGLE STRUT OPTION

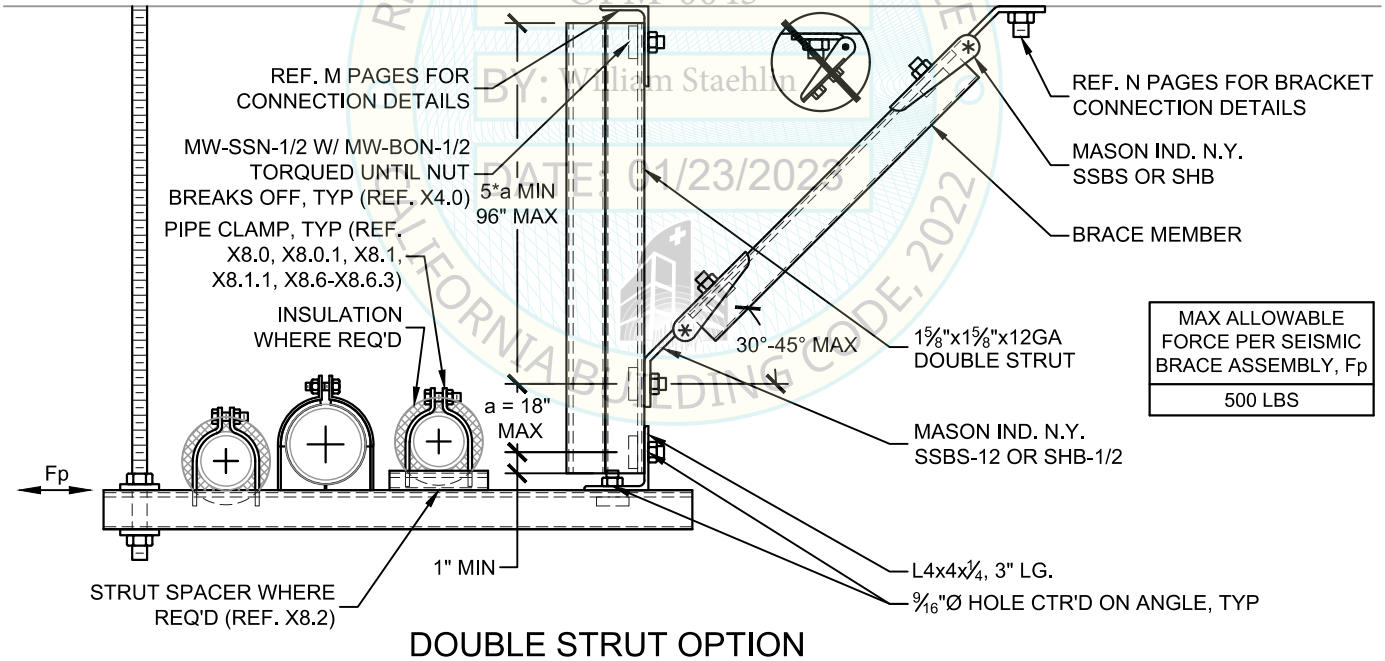

DOUBLE STRUT OPTION

REVIEWED FOR CODE COMPLIANCE
IAPMO UMC
OPM-0043
BY: William Staehlin
DATE: 01/23/2023
CALIFORNIA BUILDING CODE, 2022

NOTES:
1) REFER TO APPROPRIATE F PAGES FOR DIMENSIONS AND ANNOTATIONS NOT SHOWN.
2) SINGLE STRUT AND DOUBLE STRUT OPTIONS MAY CARRY UP TO A MAXIMUM OF 30LBS/FT OR 60LBS/FT, RESPECTIVELY.

MASON WEST
1601 E. Miraloma Ave. Placentia, CA 92870
TEL (714) 630 - 0701, www.masonwest.com

Jiefu "Jeff" Zhang, SE
California SE No. S5270

PAGE
A18.4

SEISMIC SOLID BRACING OFF STRUT HANGER
LONGITUDINAL OPTION FOR SUSPENDED PIPING ON TRAPEZE

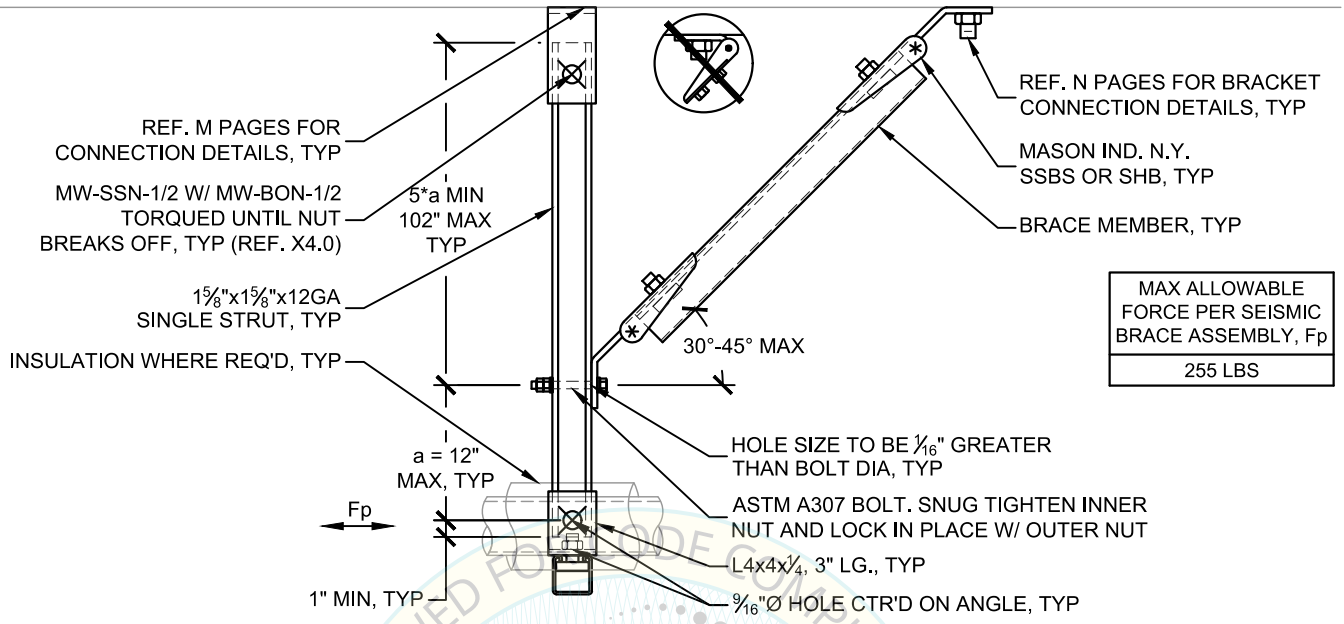

SINGLE STRUT OPTION

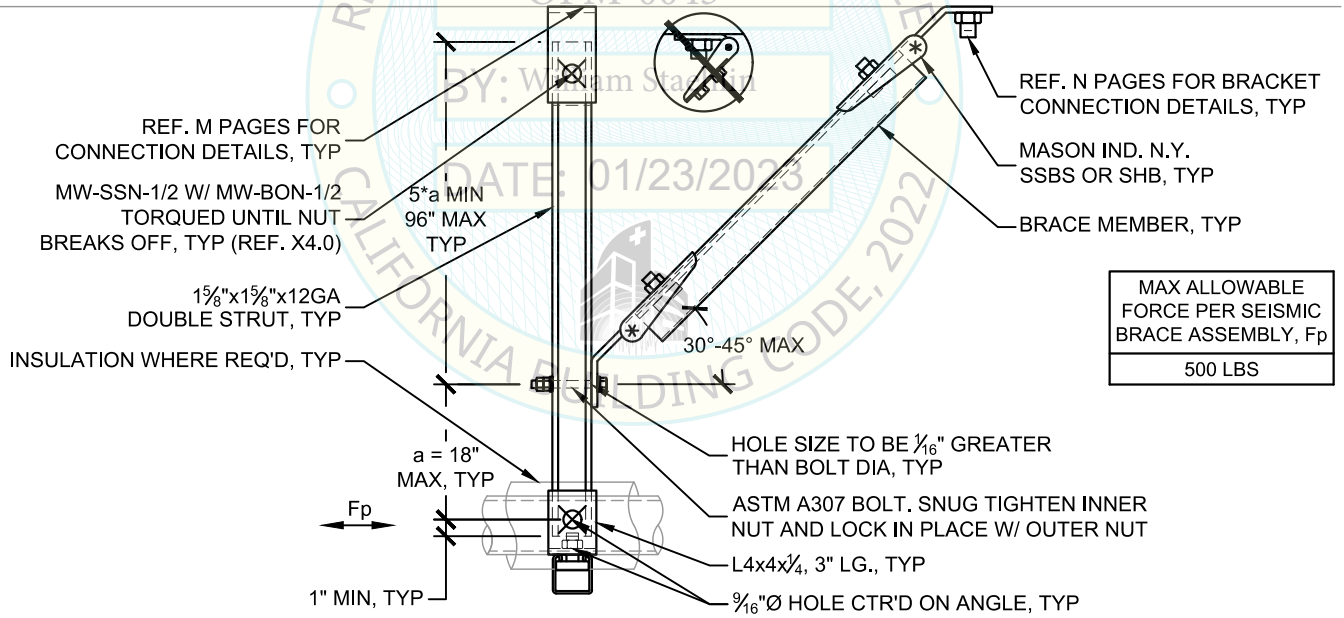

DOUBLE STRUT OPTION

HCAi
OPM-0043
BY: William Staehlin
DATE: 01/23/2023
REVIEWED FOR CODE COMPLIANCE
CALIFORNIA BUILDING CODE, 2022

NOTES:
1) REFER TO APPROPRIATE F PAGES FOR DIMENSIONS AND ANNOTATIONS NOT SHOWN.
2) SINGLE STRUT AND DOUBLE STRUT OPTIONS MAY CARRY UP TO A MAXIMUM OF 30LBS/FT OR 60LBS/FT, RESPECTIVELY.

MASON WEST
1601 E. Miraloma Ave. Placentia, CA 92870
TEL (714) 630 - 0701, www.masonwest.com

Jiefu "Jeff" Zhang, SE
California SE No. S5270

PAGE
A18.5

SEISMIC CABLE BRACING OFF STRUT HANGER TRANSVERSE OPTION FOR SUSPENDED PIPING ON TRAPEZE

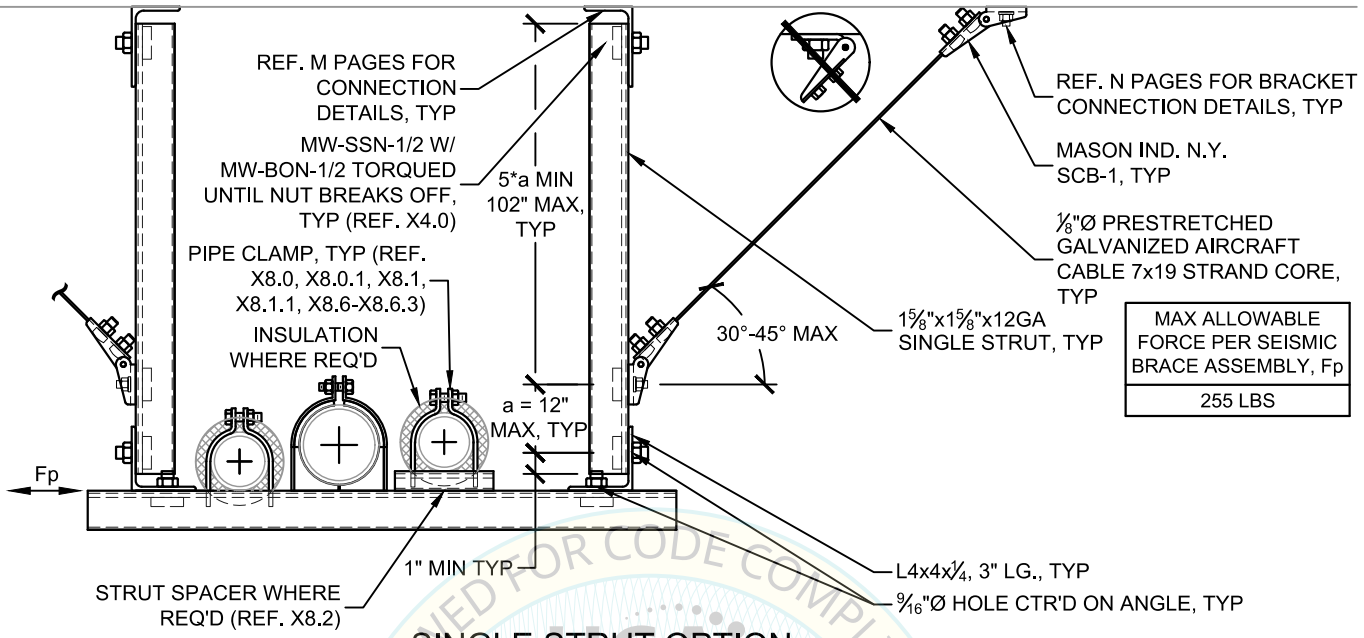

SINGLE STRUT OPTION

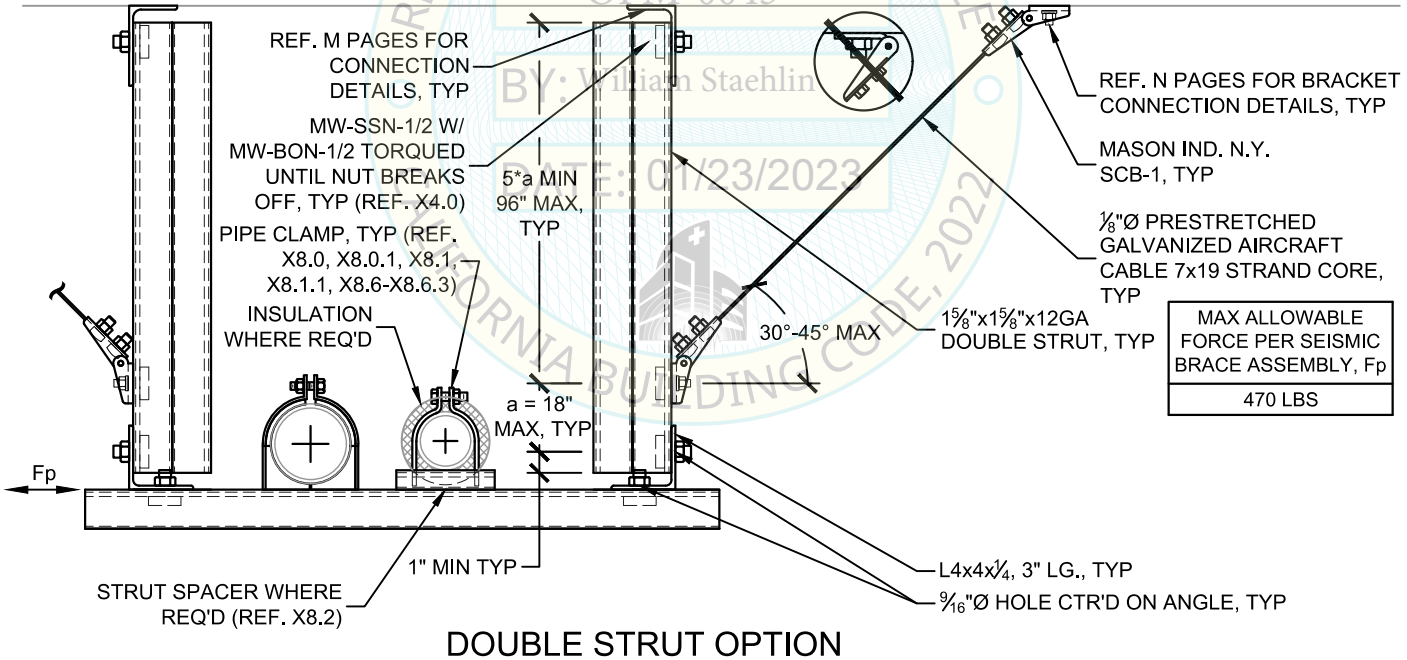

DOUBLE STRUT OPTION

REVIEWED FOR CODE COMPLIANCE
OPM-0043
BY: William Staehlin
DATE: 01/23/2023
CALIFORNIA BUILDING CODE, 2022

NOTES:
1) REFER TO APPROPRIATE F PAGES FOR DIMENSIONS AND ANNOTATIONS NOT SHOWN.
2) SINGLE STRUT AND DOUBLE STRUT OPTIONS MAY CARRY UP TO A MAXIMUM OF 30LBS/FT OR 60LBS/FT, RESPECTIVELY.
3) REF. A18.6.1 FOR ALTERNATE INSTALLATION OPTIONS.

MASON WEST
1601 E. Miraloma Ave. Placentia, CA 92870
TEL (714) 630 - 0701, www.masonwest.com

Jiefu "Jeff" Zhang, SE
California SE No. S5270

PAGE
A18.6

SEISMIC CABLE BRACING OFF STRUT HANGER
TRANSVERSE OPTION FOR SUSPENDED PIPING ON TRAPEZE

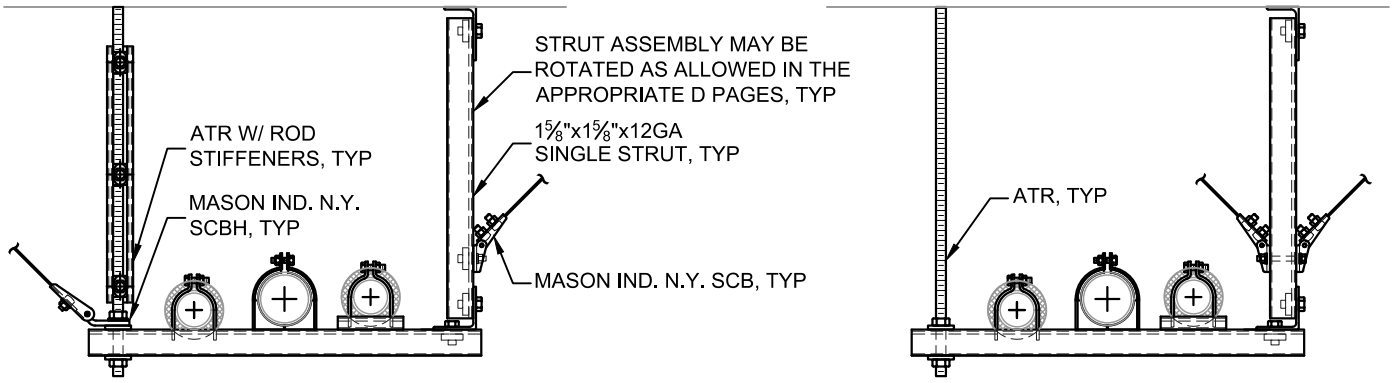

ALTERNATE INSTALLATION FOR SINGLE STRUT OPTION

REVIEWED FOR CODE COMPLIANCE
HCAi
OPM-0043
BY: William Staehlin
DATE: 1/23/2023
CALIFORNIA BUILDING CODE, 2022

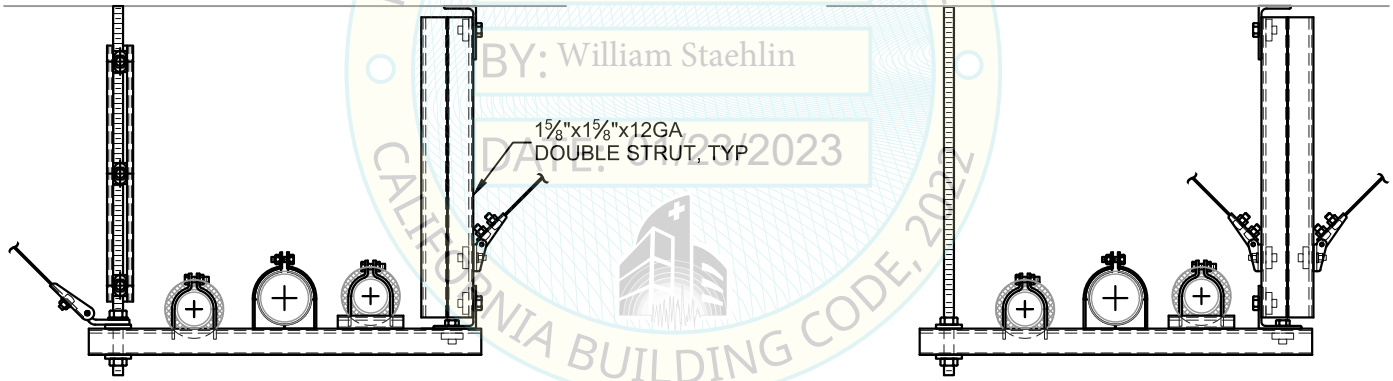

ALTERNATE INSTALLATION FOR DOUBLE STRUT OPTION

NOTES:
1) REFER TO A18.6 AND APPROPRIATE F PAGES FOR DIMENSIONS AND ANNOTATIONS NOT SHOWN.

MASON WEST
1601 E. Miraloma Ave. Placentia, CA 92870
TEL (714) 630 - 0701, www.masonwest.com

Jiefu "Jeff" Zhang, SE
California SE No. S5270

PAGE
A18.6.1

SEISMIC CABLE BRACING OFF STRUT HANGER LONGITUDINAL OPTION FOR SUSPENDED PIPING ON TRAPEZE

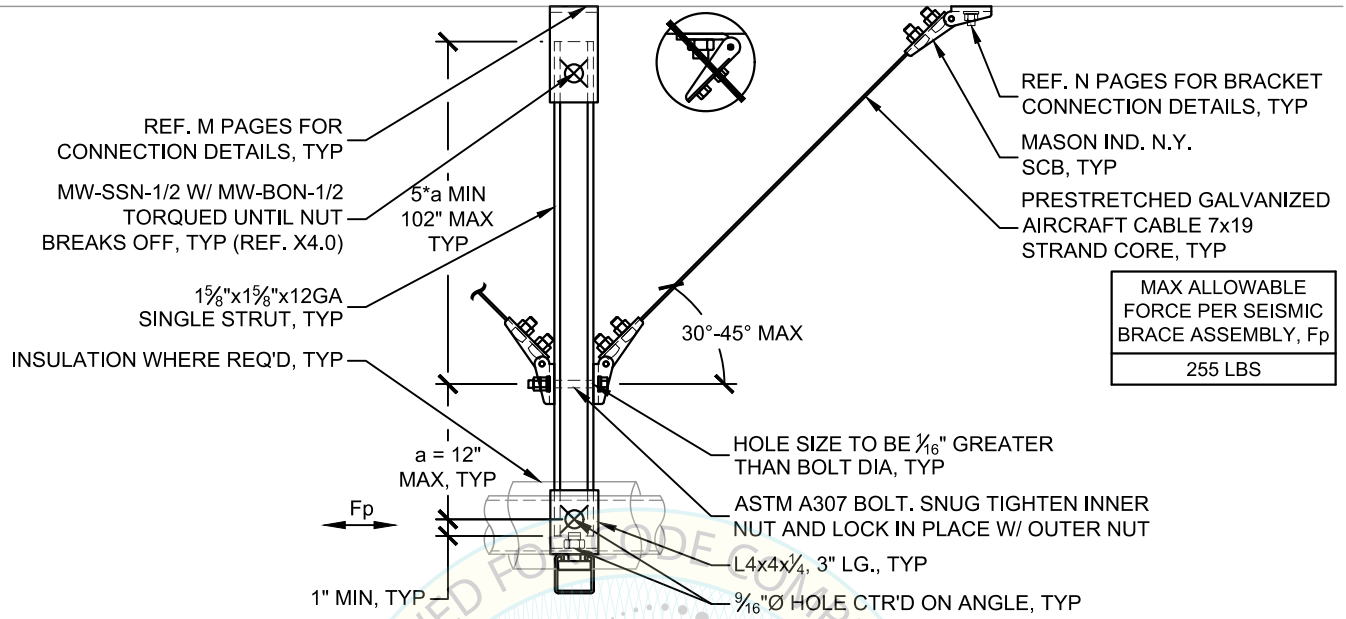

MAX ALLOWABLE FORCE PER SEISMIC BRACE ASSEMBLY, Fp
255 LBS

SINGLE STRUT OPTION

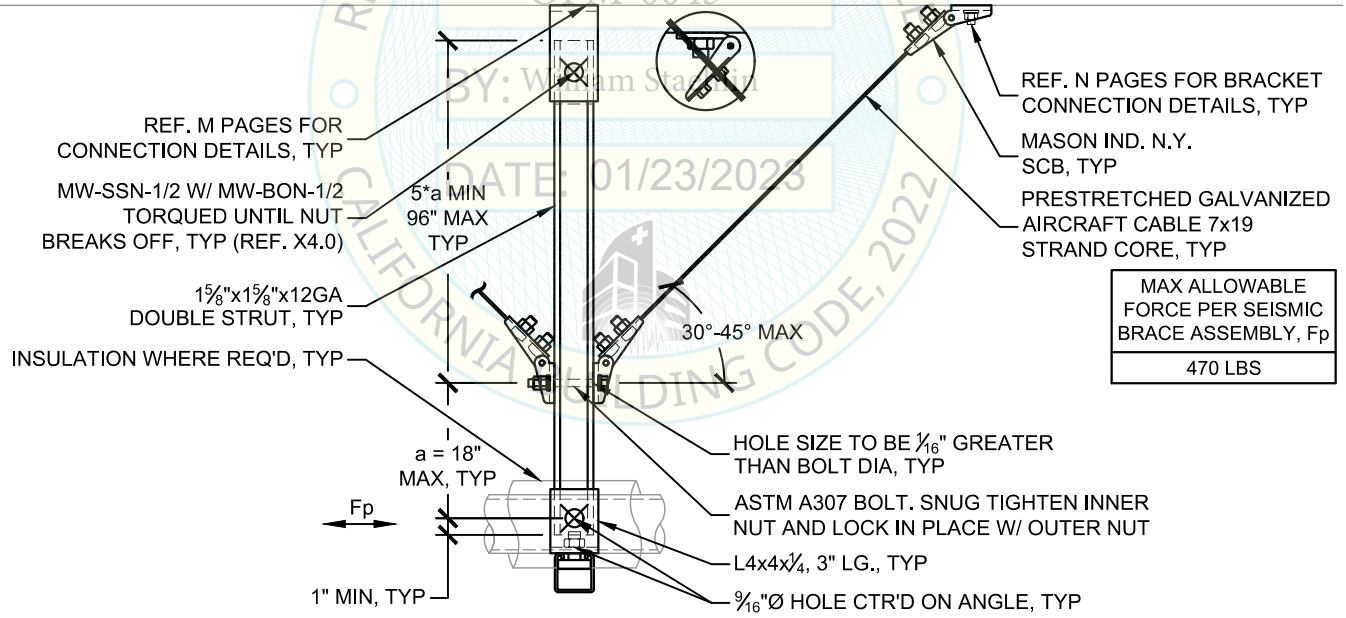

MAX ALLOWABLE FORCE PER SEISMIC BRACE ASSEMBLY, Fp
470 LBS

DOUBLE STRUT OPTION

REVIEWED FOR CODE COMPLIANCE
CALIFORNIA BUILDING CODE, 2022
HCAi
OPM-0043
BY: William Staehlin
DATE: 01/23/2023

NOTES:
1) REFER TO APPROPRIATE F PAGES FOR DIMENSIONS AND ANNOTATIONS NOT SHOWN.
2) SINGLE STRUT AND DOUBLE STRUT OPTIONS MAY CARRY UP TO A MAXIMUM OF 30LBS/FT OR 60LBS/FT, RESPECTIVELY.

MASON WEST
1601 E. Miraloma Ave. Placentia, CA 92870
TEL (714) 630 - 0701, www.masonwest.com

Jiefu "Jeff" Zhang, SE
California SE No. S5270

PAGE
A18.7

TRANSVERSE SEISMIC BRACING OFF ROD STIFFENER FOR SUSPENDED PIPING

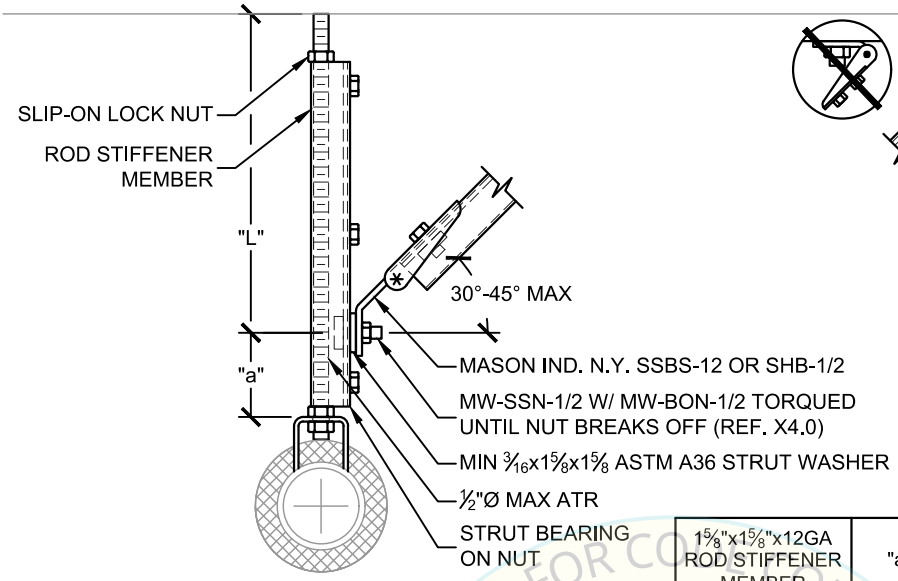

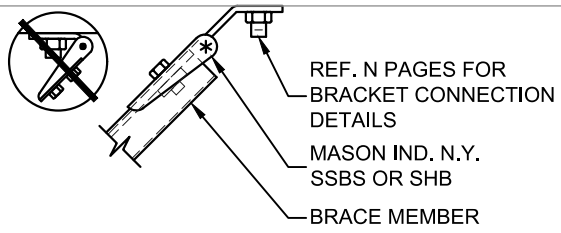

1 5/8"x1 5/8"x12GA ROD STIFFENER MEMBER	"a"	"L"	MAX ALLOWABLE FORCE PER SEISMIC BRACE ASSEMBLY, Fp
SINGLE STRUT	12" MAX	5*a MIN, 102" MAX	255 LBS
DOUBLE STRUT	18" MAX	5*a MIN, 96" MAX	500 LBS

SOLID BRACING OPTION

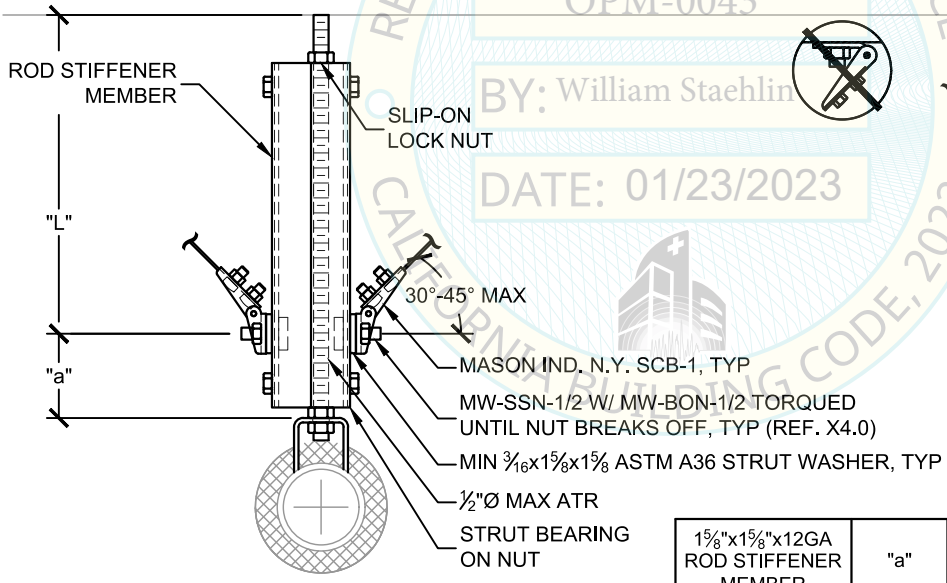

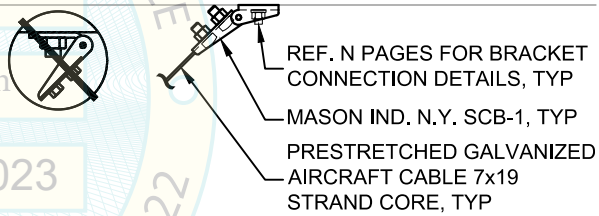

1 5/8"x1 5/8"x12GA ROD STIFFENER MEMBER	"a"	"L"	MAX ALLOWABLE FORCE PER SEISMIC BRACE ASSEMBLY, Fp
DOUBLE STRUT	18" MAX	5*a MIN, 96" MAX	470 LBS

CABLE BRACING OPTION

NOTE: REFER TO APPROPRIATE C PAGES FOR DIMENSIONS AND ANNOTATIONS NOT SHOWN.

MASON WEST
1601 E. Miraloma Ave. Placentia, CA 92870
TEL (714) 630 - 0701, www.masonwest.com

Jiefu "Jeff" Zhang, SE
California SE No. S5270

PAGE
A18.8

REVIEWED FOR CODE COMPLIANCE
HCAI
OPM-0043
BY: William Staehlin
DATE: 01/23/2023
CALIFORNIA BUILDING CODE, 2022

LONGITUDINAL SEISMIC BRACING OFF ROD STIFFENER FOR SUSPENDED PIPING

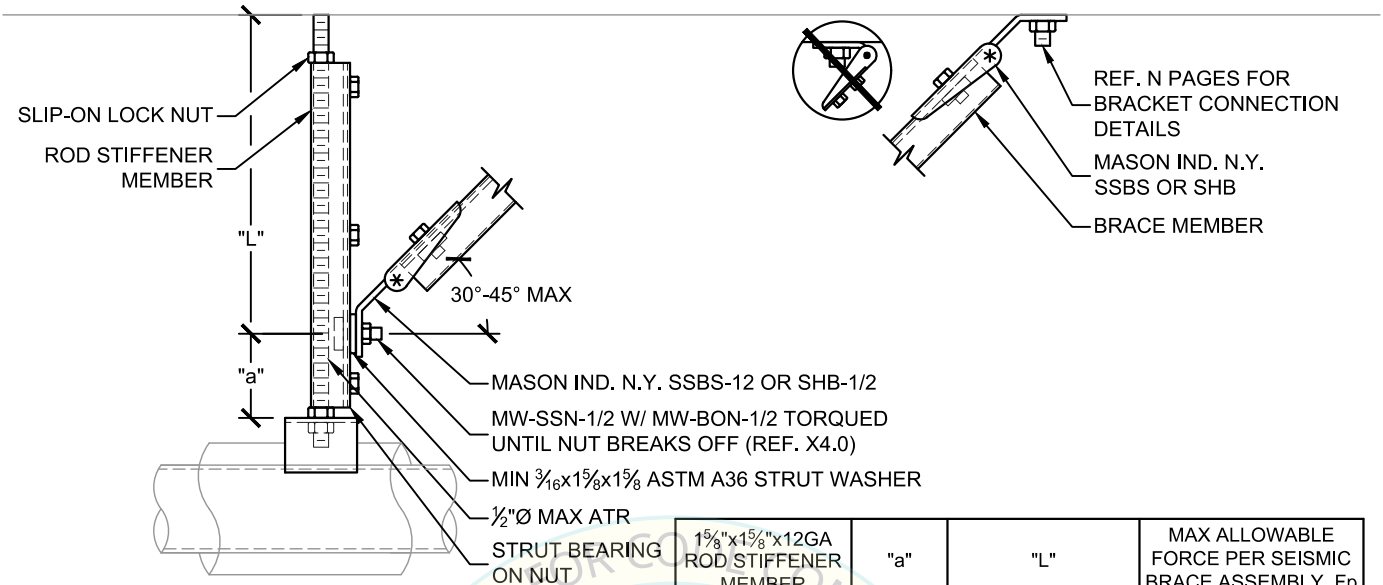

1 5/8"x1 5/8"x12GA ROD STIFFENER MEMBER	"a"	"L"	MAX ALLOWABLE FORCE PER SEISMIC BRACE ASSEMBLY, Fp
SINGLE STRUT	12" MAX	5*a MIN, 102" MAX	255 LBS
DOUBLE STRUT	18" MAX	5*a MIN, 96" MAX	500 LBS

SOLID BRACING OPTION

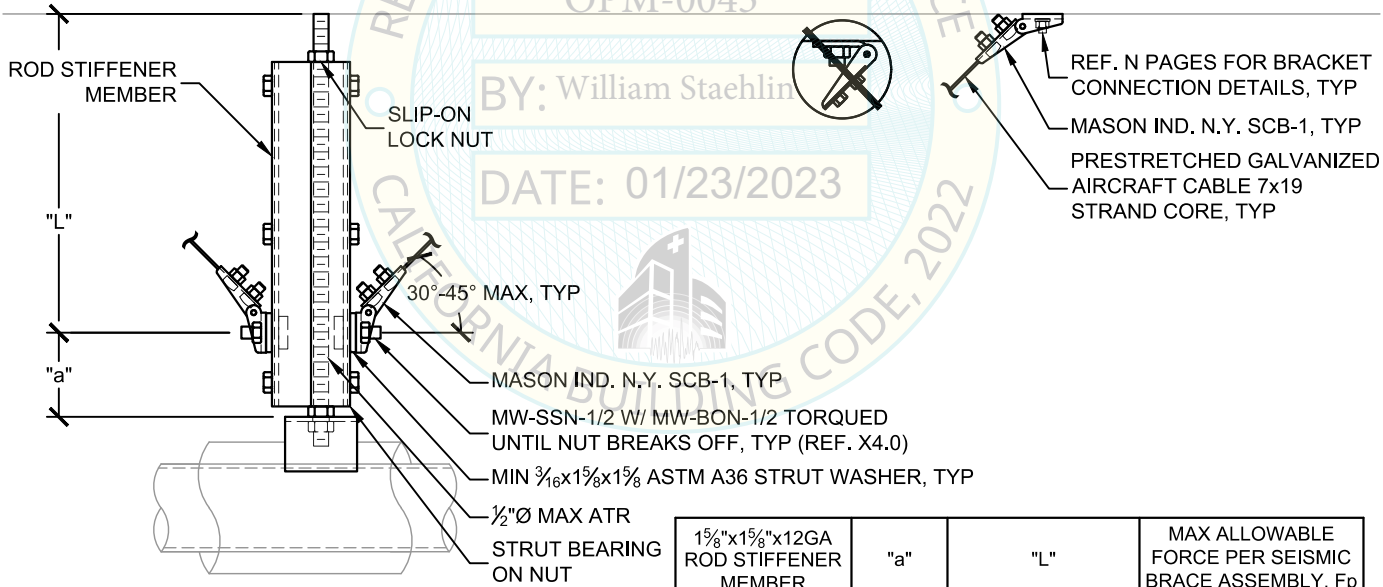

1 5/8"x1 5/8"x12GA ROD STIFFENER MEMBER	"a"	"L"	MAX ALLOWABLE FORCE PER SEISMIC BRACE ASSEMBLY, Fp
DOUBLE STRUT	18" MAX	5*a MIN, 96" MAX	470 LBS

CABLE BRACING OPTION

NOTE: REFER TO APPROPRIATE C PAGES FOR DIMENSIONS AND ANNOTATIONS NOT SHOWN.

MASON WEST
1601 E. Miraloma Ave. Placentia, CA 92870
TEL (714) 630 - 0701, www.masonwest.com

Jiefu "Jeff" Zhang, SE
California SE No. S5270

PAGE
A18.9

REVIEWED FOR CODE COMPLIANCE
HCAI
OPM-0043
BY: William Staehlin
DATE: 01/23/2023
CALIFORNIA BUILDING CODE, 2022

TRANSVERSE SEISMIC BRACING OFF ROD STIFFENER FOR SUSPENDED PIPING ON TRAPEZE

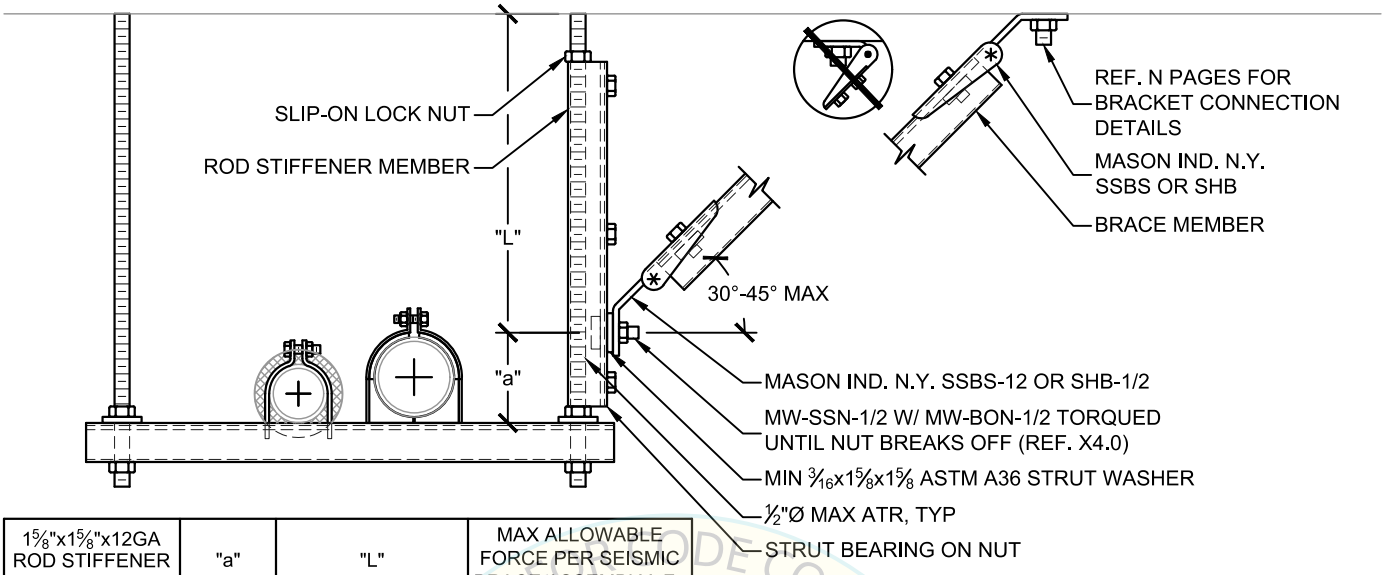

1⅝"x1⅝"x12GA ROD STIFFENER MEMBER	"a"	"L"	MAX ALLOWABLE FORCE PER SEISMIC BRACE ASSEMBLY, Fp
SINGLE STRUT	12" MAX	5*a MIN, 102" MAX	255 LBS
DOUBLE STRUT	18" MAX	5*a MIN, 96" MAX	500 LBS

SOLID BRACING OPTION

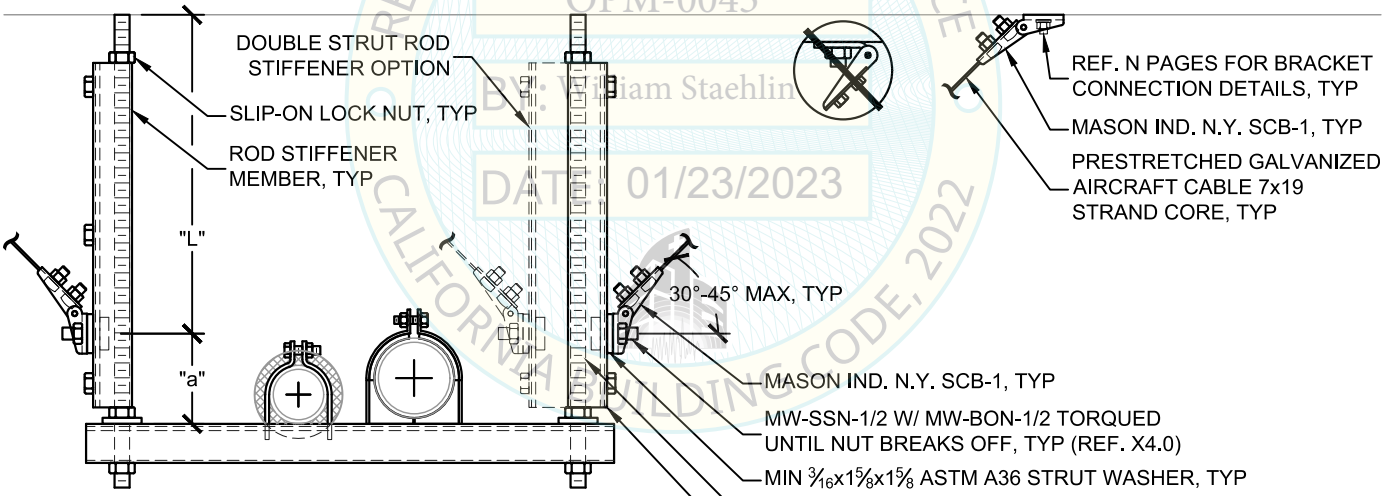

1⅝"x1⅝"x12GA ROD STIFFENER MEMBER	"a"	"L"	MAX ALLOWABLE FORCE PER SEISMIC BRACE ASSEMBLY, Fp
SINGLE STRUT	12" MAX	5*a MIN, 102" MAX	255 LBS
DOUBLE STRUT	18" MAX	5*a MIN, 96" MAX	470 LBS

CABLE BRACING OPTION

NOTE: REFER TO APPROPRIATE F PAGES FOR DIMENSIONS AND ANNOTATIONS NOT SHOWN.

REVIEWED FOR CODE COMPLIANCE
HCAi
OPM-0043
BY: William Staehlin
DATE: 01/23/2023
CALIFORNIA BUILDING CODE, 2022

MASON WEST
1601 E. Miraloma Ave. Placentia, CA 92870
TEL (714) 630 - 0701, www.masonwest.com

Jiefu "Jeff" Zhang, SE
California SE No. S5270

PAGE
A18.10

LONGITUDINAL SEISMIC BRACING OFF ROD STIFFENER FOR SUSPENDED PIPING ON TRAPEZE

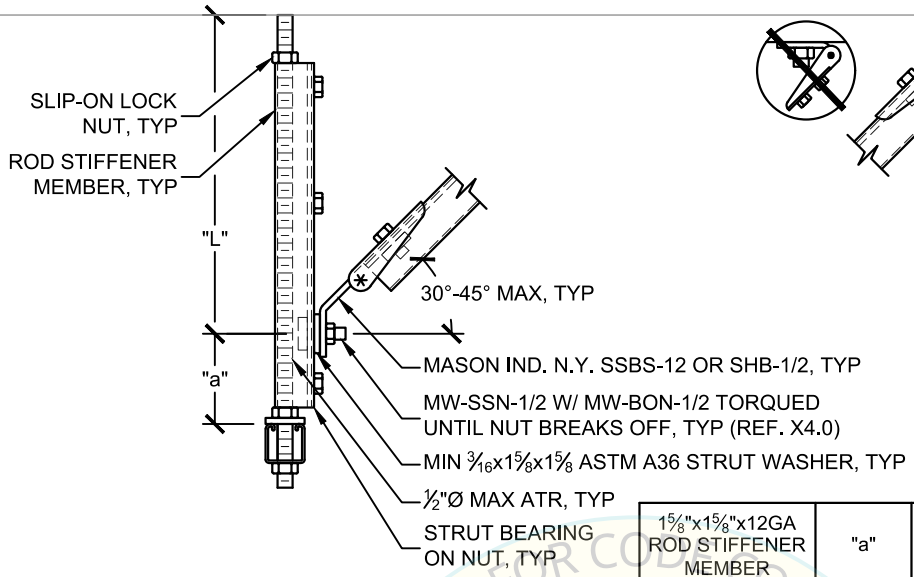

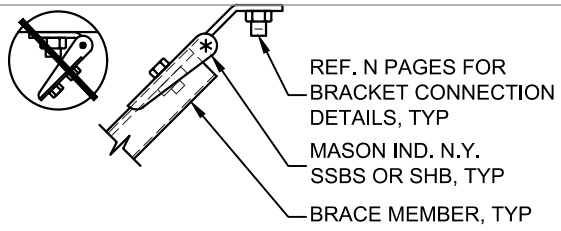

1 5/8"x1 5/8"x12GA ROD STIFFENER MEMBER	"a"	"L"	MAX ALLOWABLE FORCE PER SEISMIC BRACE ASSEMBLY, Fp
SINGLE STRUT	12" MAX	5*a MIN, 102" MAX	255 LBS
DOUBLE STRUT	18" MAX	5*a MIN, 96" MAX	500 LBS

SOLID BRACING OPTION

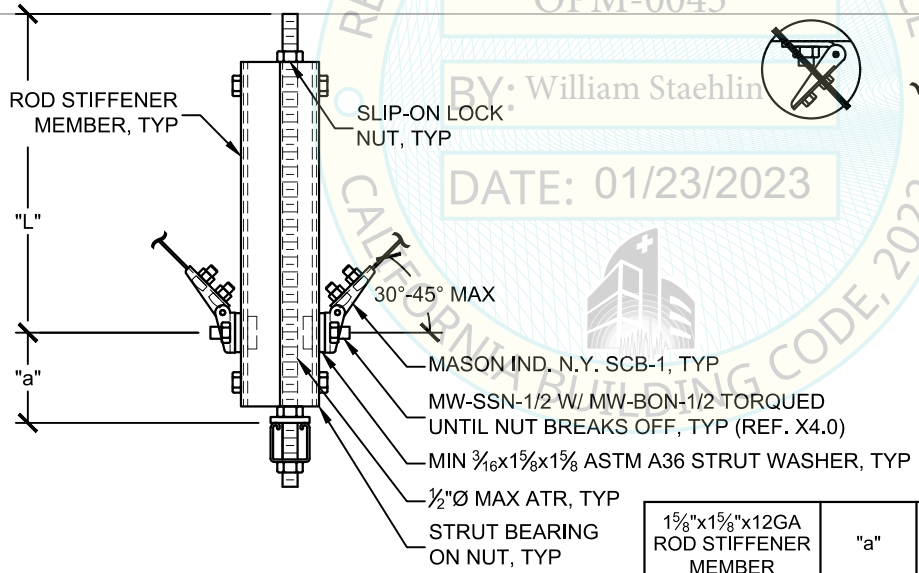

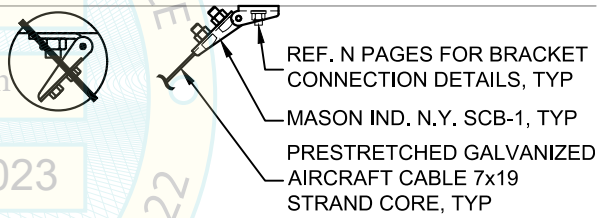

1 5/8"x1 5/8"x12GA ROD STIFFENER MEMBER	"a"	"L"	MAX ALLOWABLE FORCE PER SEISMIC BRACE ASSEMBLY, Fp
DOUBLE STRUT	18" MAX	5*a MIN, 96" MAX	470 LBS

CABLE BRACING OPTION

NOTES:
1) REFER TO APPROPRIATE F PAGES FOR DIMENSIONS AND ANNOTATIONS NOT SHOWN.
2) PIPING NOT SHOWN FOR CLARITY.

REVIEWED FOR CODE COMPLIANCE
HCAI
OPM-0043
BY: William Staehlin
DATE: 01/23/2023
CALIFORNIA BUILDING CODE, 2022

MASON WEST
1601 E. Miraloma Ave. Placentia, CA 92870
TEL (714) 630 - 0701, www.masonwest.com

Jiefu "Jeff" Zhang, SE
California SE No. S5270

PAGE
A18.11

SEISMIC SOLID BRACING PIPE CLAMP OPTION FOR INDIVIDUALLY SUSPENDED PIPING

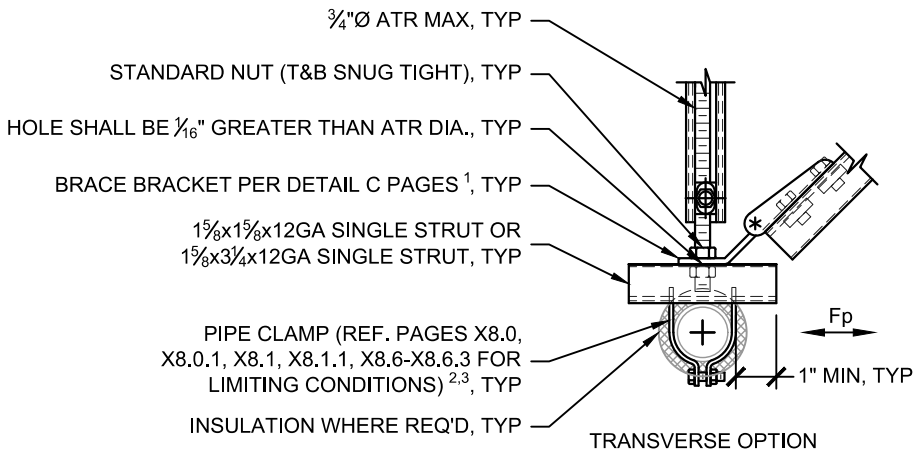

TRANSVERSE OPTION

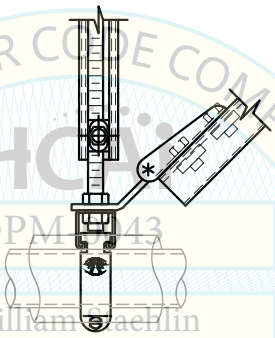

LONGITUDINAL OPTION

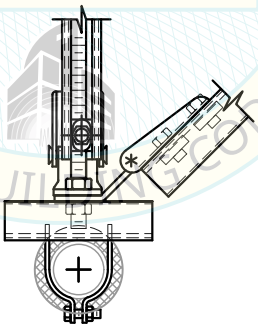

ALL-DIRECTIONAL OPTION

REVIEWED FOR CODE COMPLIANCE
HCAI
OPM-0043
BY: William Staehlin
DATE: 01/23/2023
CALIFORNIA BUILDING CODE, 2022

NOTES:
1) REFER TO APPROPRIATE DETAIL C PAGES FOR CALL-OUTS, DIMENSIONS AND NOTATIONS NOT SHOWN.
2) CLAMP RATING MAY LOWER MAX ALLOWABLE Fp.
3) MASON WEST TYPE MW-SCCI PIPE CLAMPS MAY ONLY BE USED AT TRANSVERSE LOCATIONS.

MASON WEST
1601 E. Miraloma Ave. Placentia, CA 92870
TEL (714) 630 - 0701, www.masonwest.com

Jiefu "Jeff" Zhang, SE
California SE No. S5270

PAGE
A19.0

SEISMIC CABLE BRACING PIPE CLAMP OPTION FOR INDIVIDUALLY SUSPENDED PIPING

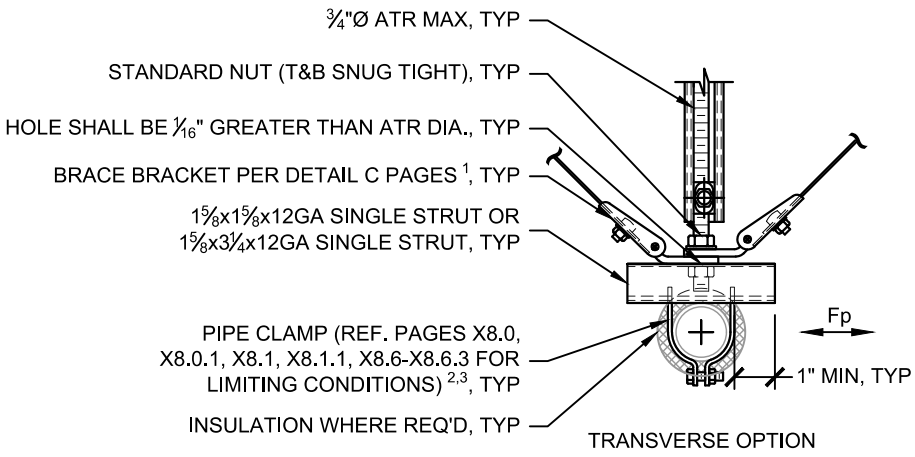

TRANSVERSE OPTION

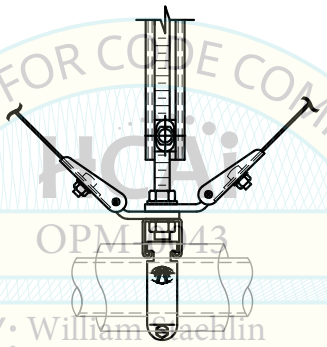

LONGITUDINAL OPTION

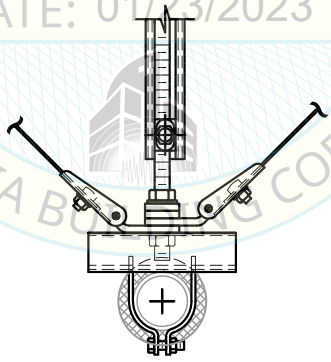

ALL-DIRECTIONAL OPTION

REVIEWED FOR CODE COMPLIANCE
CALIFORNIA BUILDING CODE, 2022
OPM-0043
BY: William Staehlin
DATE: 01/23/2023

NOTES:

1) REFER TO APPROPRIATE DETAIL C PAGES FOR CALL-OUTS, DIMENSIONS AND NOTATIONS NOT SHOWN.
2) CLAMP RATING MAY LOWER MAX ALLOWABLE Fp.
3) MASON WEST TYPE MW-SCCI PIPE CLAMPS MAY ONLY BE USED AT TRANSVERSE LOCATIONS.

MASON WEST
1601 E. Miraloma Ave. Placentia, CA 92870
TEL (714) 630 - 0701, www.masonwest.com

Jiefu "Jeff" Zhang, SE
California SE No. S5270

PAGE
A19.1

TRANSVERSE SEISMIC SOLID BRACING OPTION FOR INDIVIDUALLY SUSPENDED PIPING

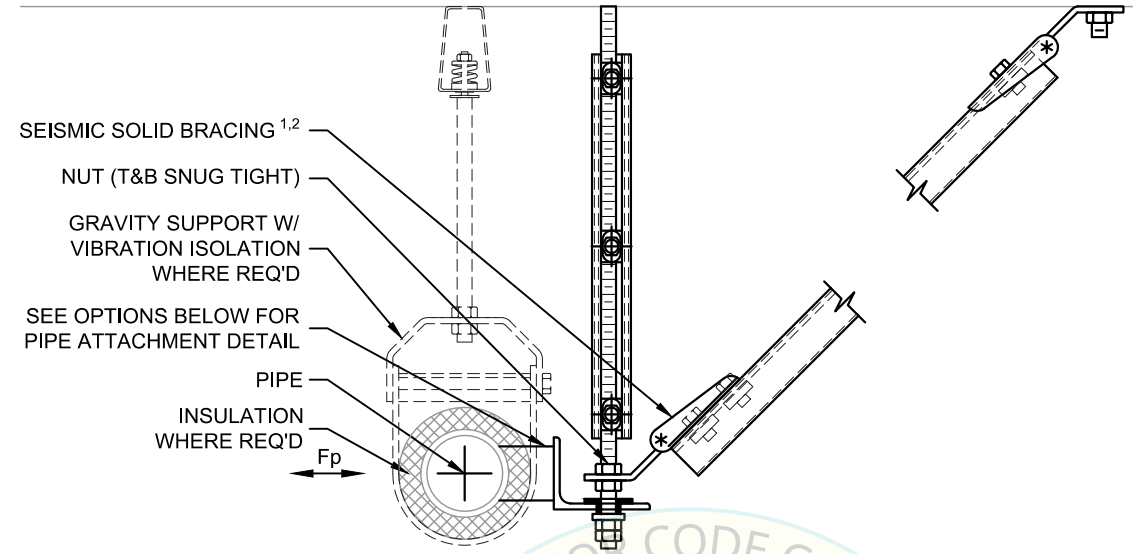

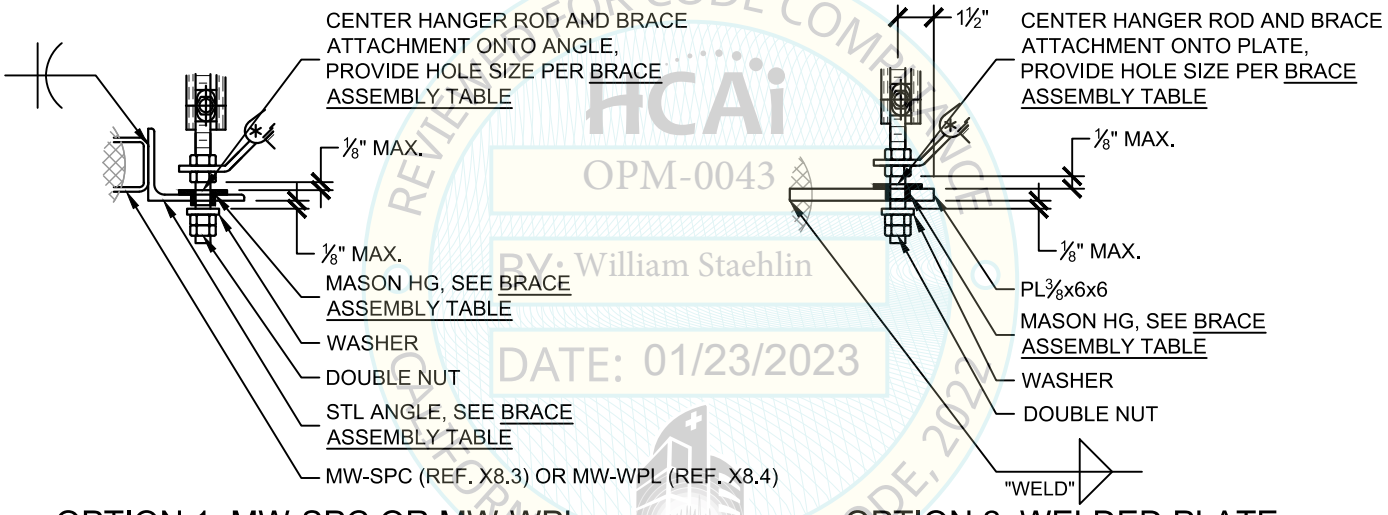

OPTION 1: MW-SPC OR MW-WPL

OPTION 2: WELDED PLATE

HCAi
OPM-0043
BY: William Staehlin
DATE: 01/23/2023
REVIEWED FOR CODE COMPLIANCE
CALIFORNIA BUILDING CODE, 2022

BRACE ASSEMBLY TABLE

PIPE SIZE	HANGER ROD	MASON HG	MW-SPC & STL ANGLE	MW-WPL & STL ANGLE	WELD	HOLE SIZE
1¼"Ø - 2"Ø	⅜	HG-38	L3x2x¼ LLH, 2" LG.	L3x2x¼ LLH, 3" LG.	⅛	⅝
2½"Ø - 3"Ø	½	HG-50	L4x3x¼ LLH, 2" LG.	L4x3x¼ LLH, 3" LG.	3/16	¾
4"Ø - 5"Ø	⅝	HG-63	L4x3x¼ LLH, 2" LG.	L4x3x¼ LLH, 4" LG.	3/16	⅞
6"Ø - 8"Ø	¾	HG-75	L4x3x¼ LLH, 3" LG.	L4x4x¼, 4" LG.	¼	1
10"Ø - 12"Ø	¾	HG-75	L4x4x¼, 3" LG.	L4x4x¼, 5" LG.	5/16	1
14"Ø - 18"Ø	1	HG-100	N/A	L5x5x5/16, 6" LG.	5/16	1¼
20"Ø - 24"Ø	1¼	HG-125	N/A	L5x5x5/16, 7" LG.	5/16	1½

NOTES:
1) REFER TO APPROPRIATE DETAIL C PAGES FOR CALL-OUTS, DIMENSIONS, AND NOTATIONS NOT SHOWN.
2) SEISMIC BRACING DOES NOT NEED TO BE LOCATED AT GRAVITY SUPPORT LOCATIONS, BUT SHALL SATISFY BRACING LAYOUT REQUIREMENTS AS DEFINED IN SECTION A10.

MASON WEST
1601 E. Miraloma Ave. Placentia, CA 92870
TEL (714) 630 - 0701, www.masonwest.com

Jiefu "Jeff" Zhang, SE
California SE No. S5270

PAGE
A19.2

LONGITUDINAL SEISMIC SOLID BRACING OPTION FOR INDIVIDUALLY SUSPENDED PIPING

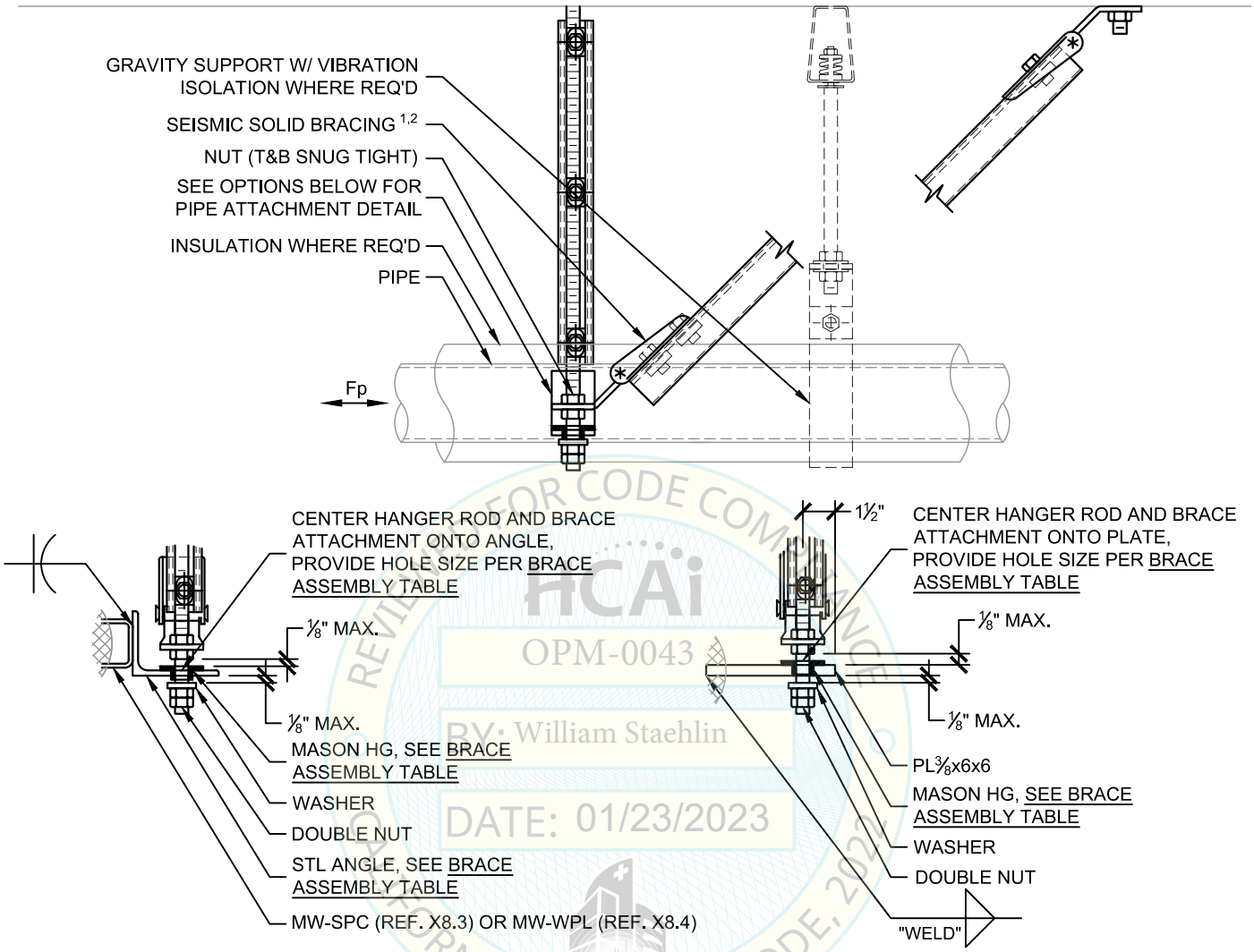

OPTION 1: MW-SPC OR MW-WPL

OPTION 2: WELDED PLATE

BRACE ASSEMBLY TABLE

PIPE SIZE	HANGER ROD	MASON HG	MW-SPC & STL ANGLE	MW-WPL & STL ANGLE	WELD	HOLE SIZE
1¼"Ø - 2"Ø	⅜	HG-38	L3x2x¼ LLH, 2" LG.	L3x2x¼ LLH, 3" LG.	⅛	⅝
2½"Ø - 3"Ø	½	HG-50	L4x3x¼ LLH, 2" LG.	L4x3x¼ LLH, 3" LG.	3/16	¾
4"Ø - 5"Ø	⅝	HG-63	L4x3x¼ LLH, 2" LG.	L4x3x¼ LLH, 4" LG.	3/16	⅞
6"Ø - 8"Ø	¾	HG-75	L4x3x¼ LLH, 3" LG.	L4x4x¼, 4" LG.	¼	1
10"Ø - 12"Ø	¾	HG-75	L4x4x¼, 3" LG.	L4x4x¼, 5" LG.	5/16	1
14"Ø - 18"Ø	1	HG-100	N/A	L5x5x5/16, 6" LG.	5/16	1¼
20"Ø - 24"Ø	1¼	HG-125	N/A	L5x5x5/16, 7" LG.	5/16	1½

NOTES:
1) REFER TO APPROPRIATE DETAIL C PAGES FOR CALL-OUTS, DIMENSIONS, AND NOTATIONS NOT SHOWN.
2) SEISMIC BRACING DOES NOT NEED TO BE LOCATED AT GRAVITY SUPPORT LOCATIONS, BUT SHALL SATISFY BRACING LAYOUT REQUIREMENTS AS DEFINED IN SECTION A10.

MASON WEST
1601 E. Miraloma Ave. Placentia, CA 92870
TEL (714) 630 - 0701, www.masonwest.com

Jiefu "Jeff" Zhang, SE
California SE No. S5270

PAGE
A19.3

HCAi
OPM-0043
BY: William Staehlin
DATE: 01/23/2023
REVIEWED FOR CODE COMPLIANCE
CALIFORNIA BUILDING CODE, 2022

ALL-DIRECTIONAL SEISMIC SOLID BRACING OPTION FOR INDIVIDUALLY SUSPENDED PIPING

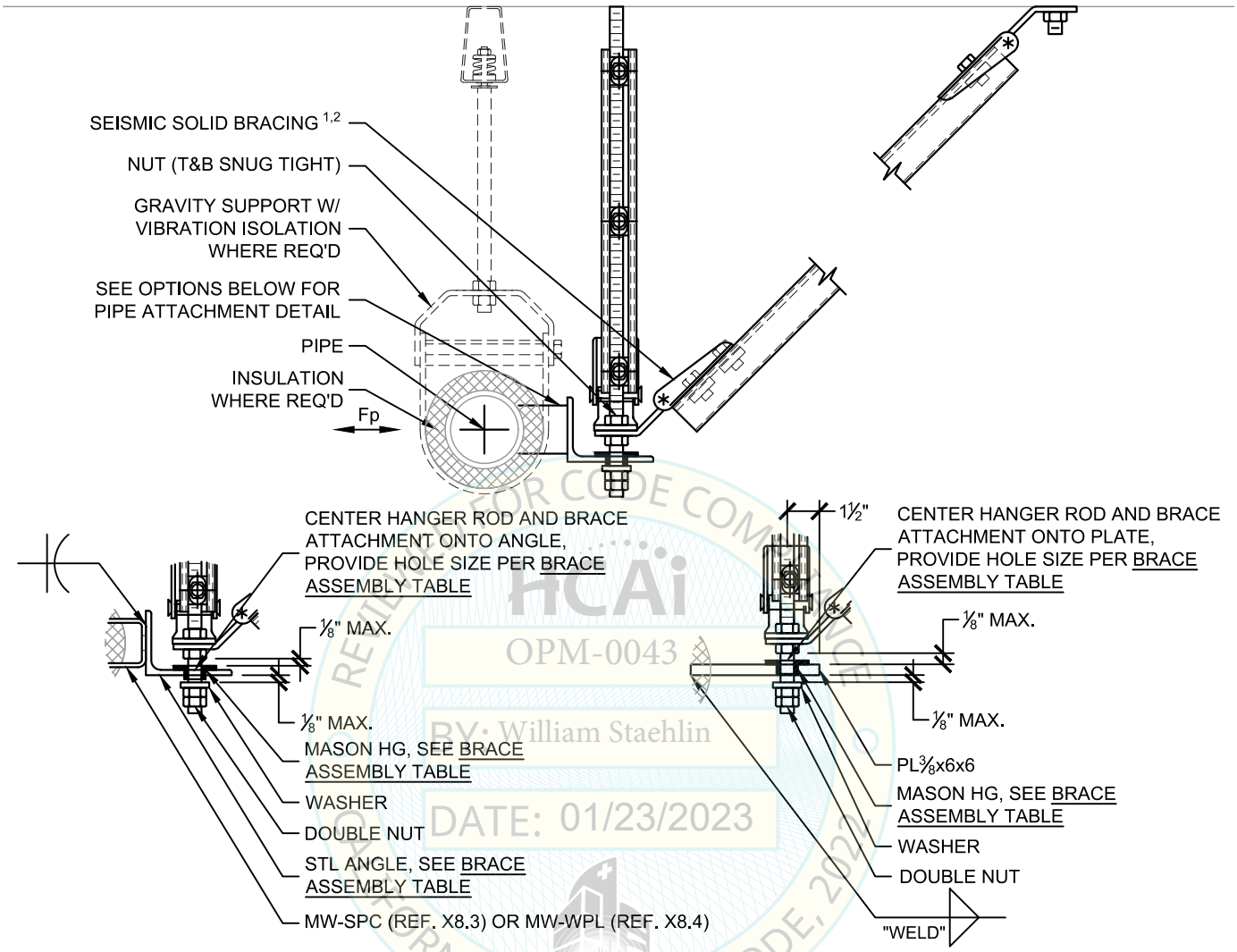

OPTION 1: MW-SPC OR MW-WPL

OPTION 2: WELDED PLATE

HCAi
OPM-0043
BY: William Staehlin
DATE: 01/23/2023
REVIEWED FOR CODE COMPLIANCE
FLORIDA BUILDING CODE, 2023

BRACE ASSEMBLY TABLE

PIPE SIZE	HANGER ROD	MASON HG	MW-SPC & STL ANGLE	MW-WPL & STL ANGLE	WELD	HOLE SIZE
1¼"Ø - 2"Ø	⅜	HG-38	L3x2x¼ LLH, 2" LG.	L3x2x¼ LLH, 3" LG.	⅛	⅝
2½"Ø - 3"Ø	½	HG-50	L4x3x¼ LLH, 2" LG.	L4x3x¼ LLH, 3" LG.	3/16	¾
4"Ø - 5"Ø	⅝	HG-63	L4x3x¼ LLH, 2" LG.	L4x3x¼ LLH, 4" LG.	3/16	⅞
6"Ø - 8"Ø	¾	HG-75	L4x3x¼ LLH, 3" LG.	L4x4x¼, 4" LG.	¼	1
10"Ø - 12"Ø	¾	HG-75	L4x4x¼, 3" LG.	L4x4x¼, 5" LG.	5/16	1
14"Ø - 18"Ø	1	HG-100	N/A	L5x5x5/16, 6" LG.	5/16	1¼
20"Ø - 24"Ø	1¼	HG-125	N/A	L5x5x5/16, 7" LG.	5/16	1½

NOTES:
1) REFER TO APPROPRIATE DETAIL C PAGES FOR CALL-OUTS, DIMENSIONS, AND NOTATIONS NOT SHOWN.
2) SEISMIC BRACING DOES NOT NEED TO BE LOCATED AT GRAVITY SUPPORT LOCATIONS, BUT SHALL SATISFY BRACING LAYOUT REQUIREMENTS AS DEFINED IN SECTION A10.

MASON WEST
1601 E. Miraloma Ave. Placentia, CA 92870
TEL (714) 630 - 0701, www.masonwest.com

Jiefu "Jeff" Zhang, SE
California SE No. S5270

PAGE
A19.4

TRANSVERSE SEISMIC CABLE BRACING OPTION FOR INDIVIDUALLY SUSPENDED PIPING

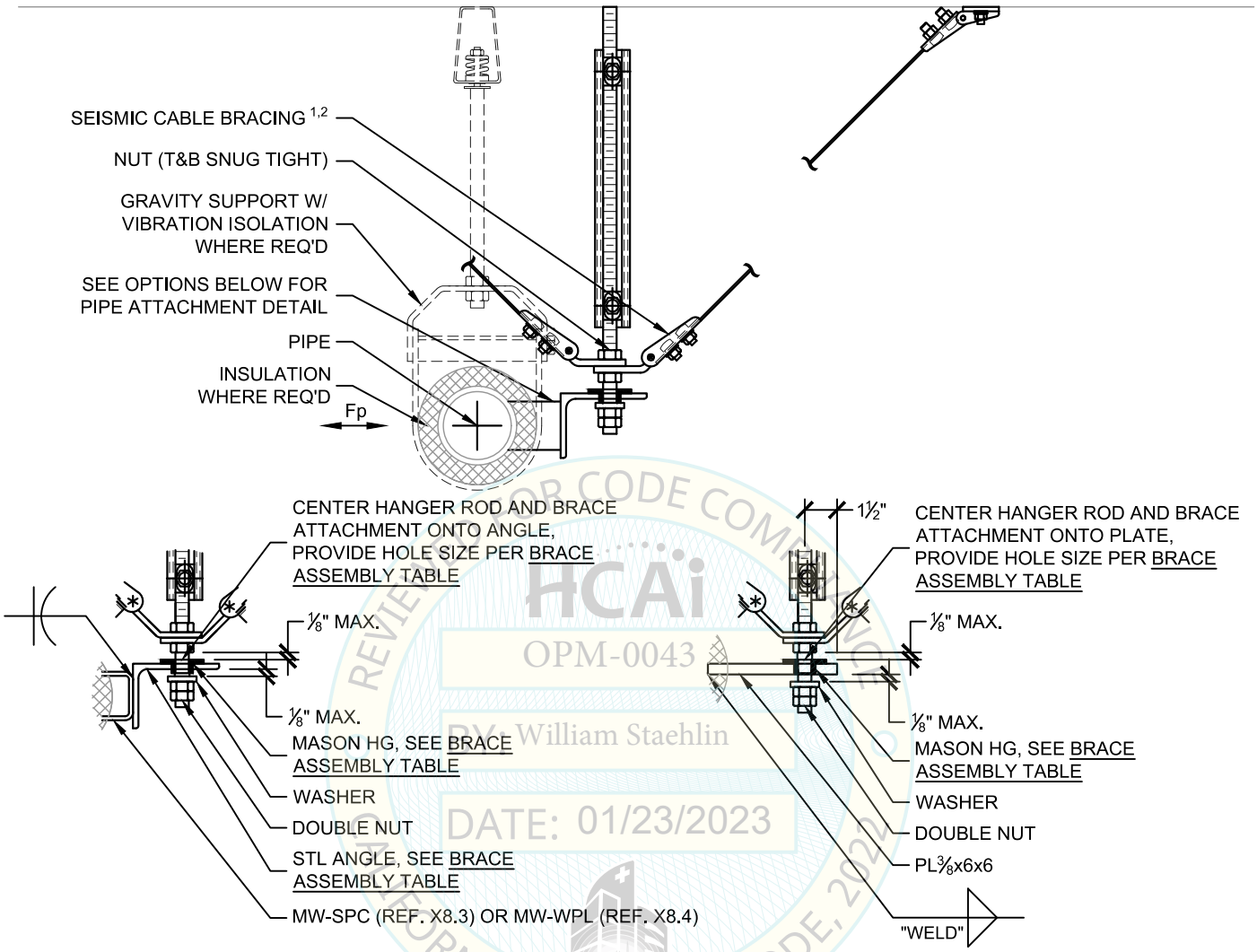

OPTION 1: MW-SPC OR MW-WPL

OPTION 2: WELDED PLATE

HCAi
OPM-0043
BY: William Staehlin
DATE: 01/23/2023
REVIEWED FOR CODE COMPLIANCE
CALIFORNIA BUILDING CODE, 2022

BRACE ASSEMBLY TABLE

PIPE SIZE	HANGER ROD	MASON HG	MW-SPC & STL ANGLE	MW-WPL & STL ANGLE	WELD	HOLE SIZE
1¼"Ø - 2"Ø	⅜	HG-38	L3x2x¼ LLH, 2" LG.	L3x2x¼ LLH, 3" LG.	⅛	⅝
2½"Ø - 3"Ø	½	HG-50	L4x3x¼ LLH, 2" LG.	L4x3x¼ LLH, 3" LG.	3⁄16	¾
4"Ø - 5"Ø	⅝	HG-63	L4x3x¼ LLH, 2" LG.	L4x3x¼ LLH, 4" LG.	3⁄16	⅞
6"Ø - 8"Ø	¾	HG-75	L4x3x¼ LLH, 3" LG.	L4x4x¼, 4" LG.	¼	1
10"Ø - 12"Ø	¾	HG-75	L4x4x¼, 3" LG.	L4x4x¼, 5" LG.	5⁄16	1
14"Ø - 18"Ø	1	HG-100	N/A	L5x5x5⁄16, 6" LG.	5⁄16	1¼
20"Ø - 24"Ø	1¼	HG-125	N/A	L5x5x5⁄16, 7" LG.	5⁄16	1½

NOTES:
1) REFER TO APPROPRIATE DETAIL C PAGES FOR CALL-OUTS, DIMENSIONS, AND NOTATIONS NOT SHOWN.
2) SEISMIC BRACING DOES NOT NEED TO BE LOCATED AT GRAVITY SUPPORT LOCATIONS, BUT SHALL SATISFY BRACING LAYOUT REQUIREMENTS AS DEFINED IN SECTION A10.

MASON WEST
1601 E. Miraloma Ave. Placentia, CA 92870
TEL (714) 630 - 0701, www.masonwest.com

Jiefu "Jeff" Zhang, SE
California SE No. S5270

PAGE
A19.5

LONGITUDINAL SEISMIC CABLE BRACING OPTION FOR INDIVIDUALLY SUSPENDED PIPING

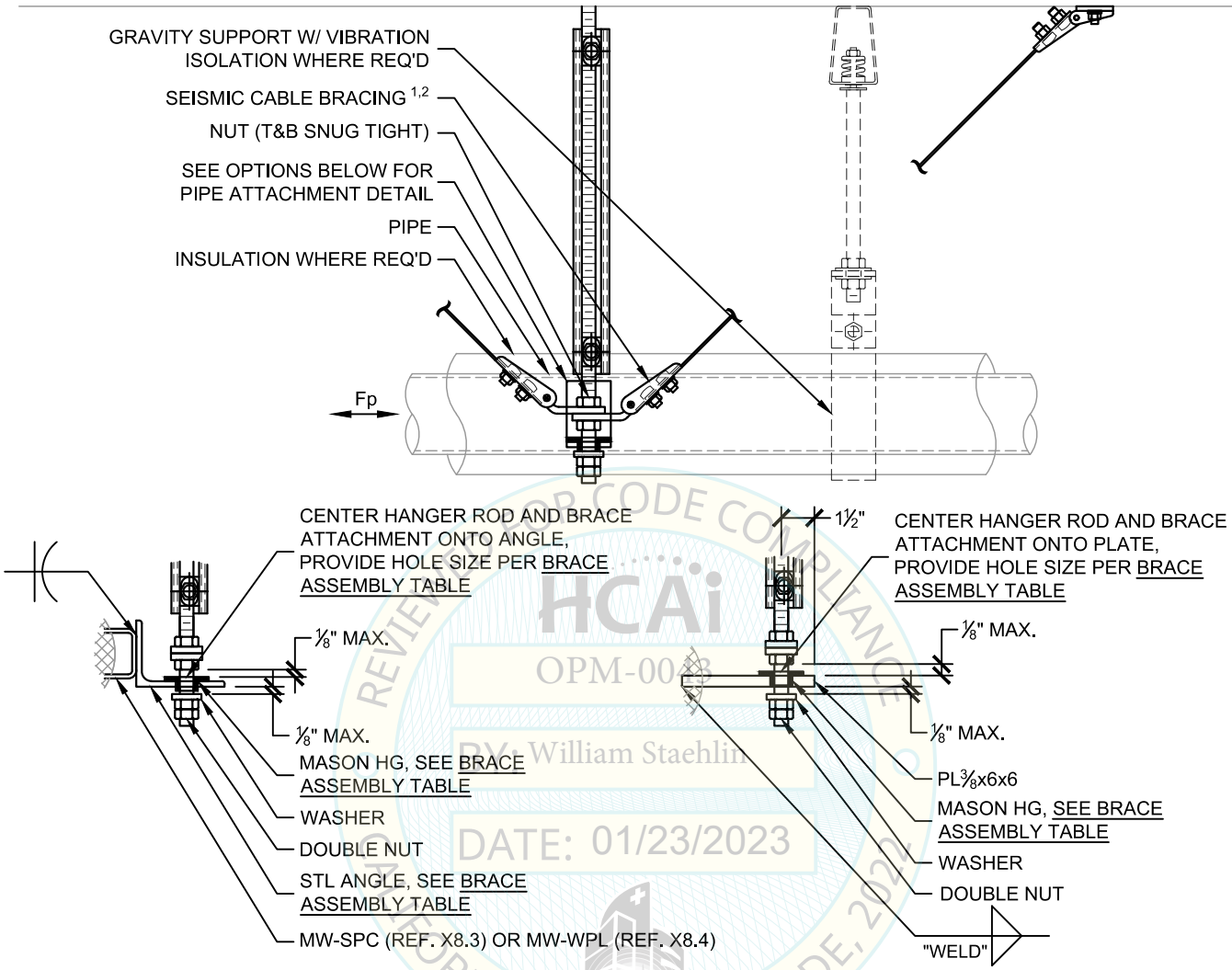

OPTION 1: MW-SPC OR MW-WPL

OPTION 2: WELDED PLATE

HCAi
OPM-0043
BY: William Staehlin
DATE: 01/23/2023
REVIEWED FOR CODE COMPLIANCE
CALIFORNIA BUILDING CODE, 2022

BRACE ASSEMBLY TABLE

PIPE SIZE	HANGER ROD	MASON HG	MW-SPC & STL ANGLE	MW-WPL & STL ANGLE	WELD	HOLE SIZE
1¼"Ø - 2"Ø	⅜	HG-38	L3x2x¼ LLH, 2" LG.	L3x2x¼ LLH, 3" LG.	⅛	⅝
2½"Ø - 3"Ø	½	HG-50	L4x3x¼ LLH, 2" LG.	L4x3x¼ LLH, 3" LG.	3/16	¾
4"Ø - 5"Ø	⅝	HG-63	L4x3x¼ LLH, 2" LG.	L4x3x¼ LLH, 4" LG.	3/16	⅞
6"Ø - 8"Ø	¾	HG-75	L4x3x¼ LLH, 3" LG.	L4x4x¼, 4" LG.	¼	1
10"Ø - 12"Ø	¾	HG-75	L4x4x¼, 3" LG.	L4x4x¼, 5" LG.	5/16	1
14"Ø - 18"Ø	1	HG-100	N/A	L5x5x5/16, 6" LG.	5/16	1¼
20"Ø - 24"Ø	1¼	HG-125	N/A	L5x5x5/16, 7" LG.	5/16	1½

NOTES:
1) REFER TO APPROPRIATE DETAIL C PAGES FOR CALL-OUTS, DIMENSIONS, AND NOTATIONS NOT SHOWN.
2) SEISMIC BRACING DOES NOT NEED TO BE LOCATED AT GRAVITY SUPPORT LOCATIONS, BUT SHALL SATISFY BRACING LAYOUT REQUIREMENTS AS DEFINED IN SECTION A10.

MASON WEST
1601 E. Miraloma Ave. Placentia, CA 92870
TEL (714) 630 - 0701, www.masonwest.com

Jiefu "Jeff" Zhang, SE
California SE No. S5270

PAGE
A19.6

ALL-DIRECTIONAL SEISMIC CABLE BRACING OPTION FOR INDIVIDUALLY SUSPENDED PIPING

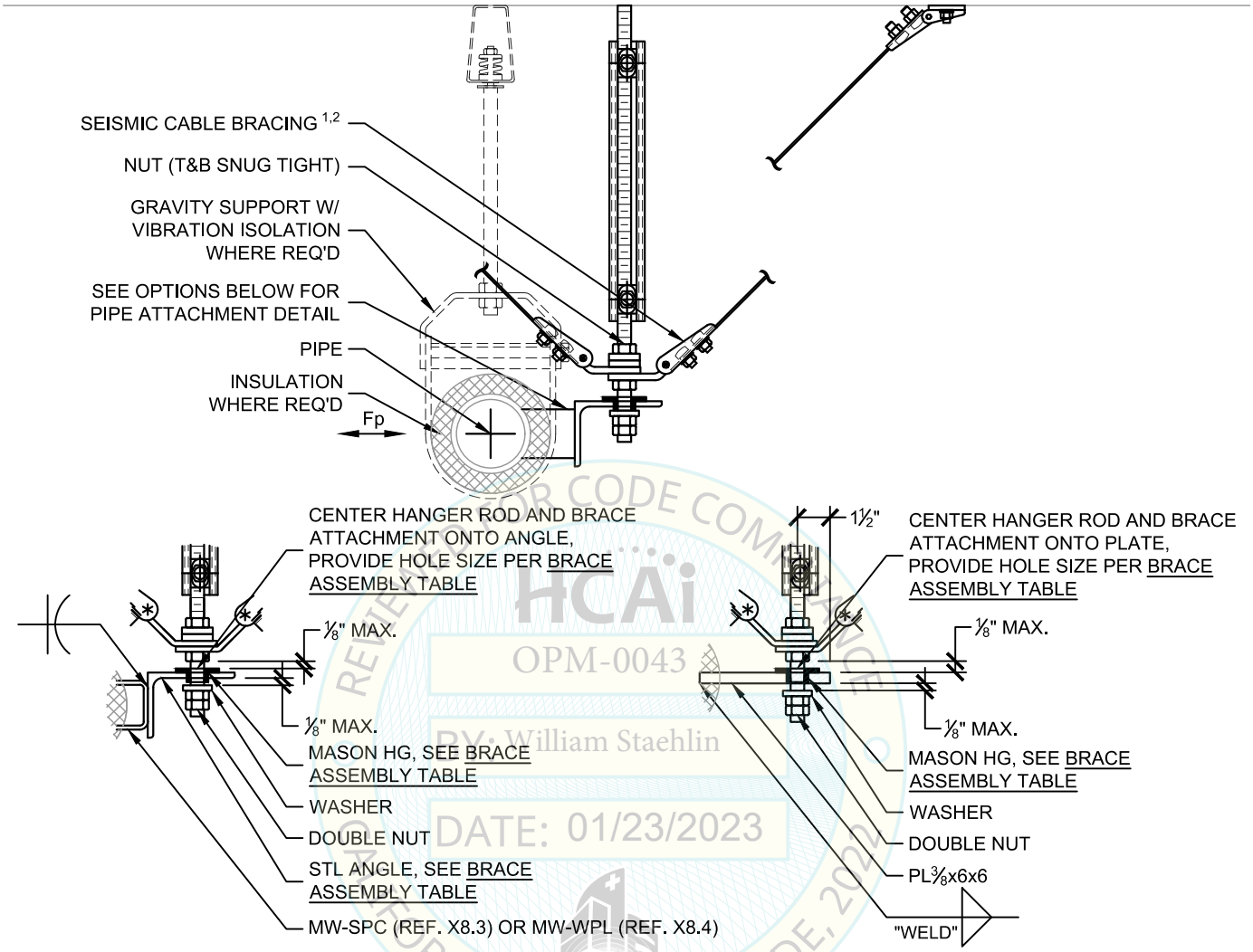

OPTION 1: MW-SPC OR MW-WPL

OPTION 2: WELDED PLATE

HCAi
OPM-0043
BY: William Staehlin
DATE: 01/23/2023
REVIEWED FOR CODE COMPLIANCE
CALIFORNIA BUILDING CODE, 2022

BRACE ASSEMBLY TABLE

PIPE SIZE	HANGER ROD	MASON HG	MW-SPC & STL ANGLE	MW-WPL & STL ANGLE	WELD	HOLE SIZE
1¼"Ø - 2"Ø	⅜	HG-38	L3x2x¼ LLH, 2" LG.	L3x2x¼ LLH, 3" LG.	⅛	⅝
2½"Ø - 3"Ø	½	HG-50	L4x3x¼ LLH, 2" LG.	L4x3x¼ LLH, 3" LG.	3/16	¾
4"Ø - 5"Ø	⅝	HG-63	L4x3x¼ LLH, 2" LG.	L4x3x¼ LLH, 4" LG.	3/16	⅞
6"Ø - 8"Ø	¾	HG-75	L4x3x¼ LLH, 3" LG.	L4x4x¼, 4" LG.	¼	1
10"Ø - 12"Ø	¾	HG-75	L4x4x¼, 3" LG.	L4x4x¼, 5" LG.	5/16	1
14"Ø - 18"Ø	1	HG-100	N/A	L5x5x5/16, 6" LG.	5/16	1¼
20"Ø - 24"Ø	1¼	HG-125	N/A	L5x5x5/16, 7" LG.	5/16	1½

NOTES:
1) REFER TO APPROPRIATE DETAIL C PAGES FOR CALL-OUTS, DIMENSIONS, AND NOTATIONS NOT SHOWN.
2) SEISMIC BRACING DOES NOT NEED TO BE LOCATED AT GRAVITY SUPPORT LOCATIONS, BUT SHALL SATISFY BRACING LAYOUT REQUIREMENTS AS DEFINED IN SECTION A10.

MASON WEST
1601 E. Miraloma Ave. Placentia, CA 92870
TEL (714) 630 - 0701, www.masonwest.com

Jiefu "Jeff" Zhang, SE
California SE No. S5270

PAGE
A19.7

ELECTRICAL GENERAL NOTES

1) This OSHPD Preapproval of Manufacturer's Certification (OPM) is based on the 2013 CBC. The demand (design forces) for use with this OPM shall be based on the 2013 CBC.

2) Per ASCE 7-10, Section 13.3.1, restraints and their anchorages must be capable of restraining horizontal, F_P, and vertical, F_{PV}, seismic accelerations as follows.

$$F_P = (0.7)\frac{0.4a_P S_{DS} W_P}{R_P/I_P}\left(1+2\frac{z}{h}\right) \qquad \text{(ASD)} \qquad \text{(ASCE 7-10 EQ 13.3-1)}$$

is not required to be taken greater than $(0.7)1.6S_{DS}I_PW_P$ (ASD) (ASCE 7-10 EQ 13.3-2)

shall not be taken less than $(0.7)0.3S_{DS}I_PW_P$ (ASD) (ASCE 7-10 EQ 13.3-3)

$$F_{PV} = (0.7)0.2S_{DS}W_P \qquad \text{(ASD)}$$

Where:

- S_{DS} = short period spectral acceleration - up to 2.5g. Values of S_{DS} indicated in the general notes of the structural drawing take precedence over those calculated per ASCE 7-10, 11.4.4.
- W_P = component (or tributary length of raceway) operating weight (lbs/ft).
- I_P = component importance factor
  - = 1.5 for OSHPD 1 & 4 in accordance with 2013 CBC, Section 1616A.1.17 and for OSHPD 2 & 3, where required by ASCE 7, Section 13.1.3.
  - = 1.0 for OSHPD 2 & 3, when permitted by ASCE 7, Section 13.1.3.
- a_P = component amplification factor (Ref. ASCE 7-10, Table 13.6-1)
  - = 2.5 for electrical conduits and cable trays.
- R_P = component response modification factor (Ref. ASCE 7-10, Table 13.6-1)
  - = 6.0 for electrical conduits and cable trays.
- z = height in structure of point of connection of component with respect to base (ft).
- h = average roof height of structure with respect to base (ft).

3) For systems anchored to concrete only, the anchorage to concrete overstrength factor, Ωo, must be applied. Sections M & N provide alternate allowable load tables with and without Ωo applied. For cases where Ωo is applicable, use the appropriate tables in Sections M & N so it is not necessary to apply this factor when calculating F_P and F_{PV}. Ωo is not applicable if a yielding steel element is considered in the load path. Refer to ACI 318-11 Appendix D, Section D.3.3.4.3 or ACI 318-14 Chapter 17, Section 17.2.3.4.3 for a list of qualifying conditions. The Registered Design Professional (RDP) shall use the allowable vertical loads under overstrength factor Ωo = 2.0 unless the vertical support complies with one of the qualifying conditions.

4) A complete description on how to use these guidelines is provided in Section A21. It includes specific examples for both using the enclosed details/charts and a layout procedure for bracing of suspended raceways.

REVIEWED FOR CODE COMPLIANCE
OPM 0043
BY: William Staehlin
ON DATE: 01/23/2023
CALIFORNIA BUILDING CODE

MASON WEST
1601 E. Miraloma Ave. Placentia, CA 92870
TEL (714) 630 - 0701, www.masonwest.com

Jiefu "Jeff" Zhang, SE
California SE No. S5270

PAGE
A20.0

ELECTRICAL GENERAL NOTES (continued)

Notes on Seismic Bracing:

1) These guidelines list installations which may be exempt from bracing under the CBC. The RDP shall be responsible for determining whether to allow these exceptions, subject to approval by the SEOR and OSHPD.

2) Each straight run of a raceway requires a minimum of two transverse braces (perpendicular to the run). (Option: A longitudinal brace located at any point of the straight run on the opposite side of an elbow or tee may act as a transverse brace. Refer to the layout examples detailed in Section A22.)

3) Each straight run of a raceway requires a minimum of one longitudinal brace (parallel to the run). (Option: A transverse brace on the opposite side of an elbow or tee can act as a longitudinal brace. Refer to the layout examples detailed in Section A22.)

   Note: For items 2) and 3) above, a short run of a raceway may not require seismic bracing if its tributary seismic load transfers to an adjacent run of a raceway that is sufficiently seismically braced that can accept the additional seismic loads, when approved by OSHPD for a specific project.

4) Transverse and longitudinal braces that project to the overhead structure shall be installed between 30 and 60 degrees from horizontal. Braces that project to an adjacent wall may be installed directly horizontal (zero degrees) or between 30 and 60 degrees from the horizontal. However, this is limited depending on the capacity of the brace and method of connection to structure.

5) Seismic bracing may consist of solid bracing designed to accept loads in tension and compression or cable bracing designed to accept tension loads only. Each brace method requires a vertical hanger within close proximity of their connection to the distribution system. (Refer to the specific detail for limitations). The vertical hanger may or may not require stiffening or additional anchorage to the structure (Refer to Notes on Supports, Page A20.2).

6) Avoid mixing solid bracing with cable bracing in the same direction on any run of a distribution system unless specifically engineered and approved by the enforcement agency.

7) Avoid bracing a system to two different parts of a building which may act differently in response to an earthquake (i.e separated by a seismic joint). In cases where this may occur, the raceway run must be designed to accept the seismic relative displacement.

8) Systems with significant thermal motion shall be designed on a case by case basis by a professional engineer familiar with both seismic loading and thermal expansion.

9) Seismic brace details for suspended raceways include maximum allowable horizontal seismic load, F_P, at different brace angle ratios. The details include Mason Industries N.Y. seismic brace component size, aircraft cable or solid brace member size, acceptable hanger rod diameter(s) and hanger rod stiffening requirements. Trapeze member sizes and connection to structure for both hanger rods and seismic braces are tabulated and/or detailed in Sections B, T, M, and N, respectively.

10) Seismic brace requirements for seismic accelerations ranging from 0.25 to 1.0g (ASD) are tabulated in Sections B5 and B6. Each schedule is designed to a specific seismic acceleration and provides maximum transverse, longitudinal and all-directional brace spacings based on operating weight per lineal foot of the raceway. In addition, the schedules provide hanger rod and seismic brace connection options that meet the same criteria. For systems that require design for over 1.0g, the brace spacing is reduced (Refer to Page A20.5, note 3).

HCAI
OPM-0043
BY: William Staehlin
DATE: 01/23/2023
REVIEWED FOR CODE COMPLIANCE
CALIFORNIA BUILDING CODE, 2022

MASON WEST
1601 E. Miraloma Ave. Placentia, CA 92870
TEL (714) 630 - 0701, www.masonwest.com

Jiefu "Jeff" Zhang, SE
California SE No. S5270

ELECTRICAL GENERAL NOTES (continued)

11) Multi-layer raceways that share support rods must be braced independently from one another or as specifically engineered by the RDP. Layers supporting loads ≤ 10 lbs/ft need not be braced, provided that the load is accounted for in the nearest braced layer. Each section of threaded rod between trapezes and/or the building structure is subject to vertical stiffening requirements.

12) Vertical drops from suspended pipe systems to equipment (or flexible connectors where applicable) may be braced using the transverse and longitudinal braces in this manual. Note: Do not exceed ½ of the maximum brace spacing as measured from the seismic brace to the equipment or flexible connector when bracing vertical drops. (Refer to the Figures on page A22.2) If the transverse or longitudinal brace cannot accept the full vertical drop, a seismic floor support designed for the applicable loads is required. Design of this support shall account for seismic relative displacement between floors and may require a flexible connection between the floor support and the first seismic brace location above.

13) Any system which crosses a building separation or seismic joint must be designed to accommodate the seismic relative displacement per ASCE 7, Section 13.3.2, 13.3.2.1, and 13.3.2.2, or as specified by the engineer of record for approval by the enforcement agency.

Notes on Supports:

1) Where the seismic brace system incorporates the use of a threaded vertical hanger rod designed to carry gravity loads only, additional anchorage and/or stiffening may be required as detailed. General support of suspended raceways to carry gravity loads shall be determined by the engineer of record and/or mechanical code requirements. However, hanger rod connection details in this manual may be used as a guide for these supports. ASTM A307 threaded rods may be used in lieu of ASTM A36 threaded rods as called out in this manual. The use of "C-Clamps" designed to attach threaded rod to one side of a steel beam flange shall not be used unless they are provided with a restraining strap or hook to the opposite beam flange, equivalent to those specified in NFPA 13, Section 9.3.7 and approved from OSHPD.

2) Support rod capacity and its anchorage to the structure is an important part of a solid bracing system. Solid braces shall not be attached to existing systems or support rods designed for gravity loads unless they are checked for increased loads.

3) Threaded vertical hanger rods where seismic sway bracing is attached may require stiffening if the length of the rod exceeds the maximum unbraced rod length indicated on the kit installation detail in Sections C, E, and F. However, if the calculated compression on the rod due to combined gravity, the vertical brace component of the bracing system as a result of Fp, and Fpv loads is less than or equal to zero, no rod stiffening is required, regardless of rod length. A vertical rod stiffener using a 1⅝"x1⅝"x12ga strut channel or steel angle cut to the appropriate length and attached to the threaded rod with a minimum of two Mason Ind. N.Y. Type UCC or SRC clamps is required, as detailed in Sections C, E, and F. The contractor may substitute a break-off bolt set to a minimum of 10 ft-lbs. Rod stiffening strut may be solid, slotted or punched. Ref. X7.0 and X7.1 for strut member data.

4) Trapeze supports shall consist of 12 gauge single or double channel strut, steel angles or tube steel as tabulated in Sections B5, B6, T2, and T3. For gravity-only trapeze supports and trapeze supports where transverse seismic braces are installed, the acceptable size of the trapeze member is provided in the same section. For trapeze supports where longitudinal seismic braces are to be installed, the acceptable size of the trapeze member is also provided. Trapeze members may be provided with round holes sized for hanger rods. Ref. X7.0 and X7.1 for strut member data. In all cases, for analysis purposes, the following information is required: a) seismic 'g' coefficient, b) raceway weight per foot and c) maximum span between threaded rod supports. The trapezes shall be supported by threaded rods, with nuts and washers as detailed in Sections C, E, and F and with rod stiffeners as required per note 3.

MASON WEST
1601 E. Miraloma Ave. Placentia, CA 92870
TEL (714) 630 - 0701, www.masonwest.com

Jiefu "Jeff" Zhang, SE
California SE No. S5270

PAGE
A20.2

REVIEWED FOR CODE COMPLIANCE
HCAI
OPM-0043
BY: William Staehlin
DATE: 01/23/2023
CALIFORNIA BUILDING CODE 2022

ELECTRICAL GENERAL NOTES (continued)

5) Concrete overstrength factor, Ω_0, is not required for hanger supports designed for gravity only or hanger supports at seismic cable brace locations where seismic forces do not exceed 20% of the total forces.

Notes on Seismic Cable Bracing:

1) Cables shall be prestretched galvanized 7x19 strand core aircraft cable, with no limit to their installed length. Cables meet the following specifications: MIL-DTL-83420M with Amendment 2, Type 1 non-jacketed cable.

2) Cables shall be installed slightly slack, so as not to support gravity loads.

3) Cable shall connect the braced item to a building structural element. Cable shall have a bracket at each end to make the connections. The cable assembly, with connection brackets, shall be Mason Ind. N.Y. SCB or SCBH, refer to pages X1.0 & X1.1. Cable is held to end brackets with one or two bolts. Cable bolts shall be tightened to the torque values stated in the details or, in the case where break off nuts are provided, until the nut breaks off. Break off nuts are as manufactured by Mason West, Inc. (Refer to page X4.0).

4) The Mason Ind. N.Y. SCBH component can be used for connection directly to the threaded vertical hanger rod used for supporting system gravity loads as detailed in Sections C, E, and F.

5) The SCB bracket and cable (Ref. X1.0), SCBH bracket and cable (Ref. X1.1), UCC rod stiffener clamp (Ref. X3.0), and SRC rod stiffener clamp (Ref. X3.1) are manufactured by Mason Ind. N.Y. and are included (with accompanying hardware) in the kit options provided in Sections C, E, and F.

Notes on Seismic Solid (Rigid) Bracing:

1) Solid bracing members shall be 12 gauge channel strut or steel angle. Strut members shall be solid, slotted or punched. The details in Sections C, E, and F indicate the minimum solid brace size based on a maximum solid brace length. The charts on pages X2.0, X2.1, and X2.2 tabulate different solid brace member sizes for maximum installed lengths of 5'-0", 9'-6" or 14'-6". Ref. X7.0 and X7.1 for strut member data.

2) Solid brace members shall be connected to both the distribution system and the structure using the seismic solid brace components (Mason Ind. N.Y. Type SSBS, SHB, or SSB. Refer to pages X2.0, X2.1, or X2.2, respectively).

3) The attachment between the solid brace component and the 12 gauge channel strut shall consist of (1) or (2) 1/2" bolt and strut nut connections torqued to 50 ft-lbs or, in the case where break off nuts are provided, until the nut breaks off. Refer to Sections C, E, or F to determine the quantity of bolt/strut nut connections required. Break off nuts are as manufactured by Mason West, Inc. (Refer to page X4.0).

4) The SSBS bracket (Ref. X2.0), the SHB bracket (Ref. X2.1), the SSB bracket (Ref. X2.2), the UCC rod stiffener clamp (X3.0), and SRC rod stiffener clamp (Ref. X3.1) are manufactured by Mason Ind. N.Y. and are included (with accompanying hardware) in the kit options provided in Sections C, E, and F.

REVIEWED FOR CODE COMPLIANCE
OPM-0043
By: William Staehlin
DATE: 01/23/2023
CALIFORNIA BUILDING CODE, 2022

MASON WEST
1601 E. Miraloma Ave. Placentia, CA 92870
TEL (714) 630 - 0701, www.masonwest.com

Jiefu "Jeff" Zhang, SE
California SE No. S5270

ELECTRICAL GENERAL NOTES (continued)

Notes on Seismic Brace Attachment to Building Structure:

1) Attachment methods and hardware (connectors) used for seismic bracing attachment to building structural element is the critical factor in the design of seismic sway-bracing. Lightweight structures may limit the maximum spacing between seismic braces. The structural engineer of record shall determine the maximum allowable seismic loads that may be imposed on the building structure.

2) Attachment to different types of structures are addressed in these guidelines. Attachment types include reinforced normal or sand lightweight concrete (flat slabs, slabs poured in steel decking, walls or columns), fully grouted reinforced concrete masonry, hollow steel decking, steel framing, timber framing, and metal stud wall framing. Attachments may be made with pre- or post-installed concrete anchors, machine bolts, self-drilling and self-tapping screws, lag bolts, nails or in cases of steel on steel attachments, by arc-welding. Use of attachment methods not detailed in these guidelines must be engineered on an individual job basis subject to approval by the enforcement agency. Note: The structural engineer of record shall verify that attachment details specified by the RDP are in accordance with the design concept for the primary structure.

3) Expansion anchors shall be Hilti Kwik Bolt TZ2, Powers Power-Stud+ SD1, Mason Ind. N.Y. SAS(E) or Powers Power-Stud+ SD2 for minimum 3000 psi concrete slabs, beams, or walls and concrete filled decks (sand light or normal weight) installed in accordance with ICC Reports ICC ESR 4266, 2818, 3037 or 2502, respectively. Hilti Kwik Bolt TZ2 expansion anchors shall be used to resist static and transient seismic tension and shear loads in uncracked, grout-filled concrete masonry. Expansion anchors designed to ICC-ES AC01 are limited to allowable stress design only in accordance with AC01 1.2. SEOR shall verify that: (1) masonry is not cracked as defined in ICC-ES AC01 Section 2.3; calculation required to show masonry wall would not crack under the design earthquake loads under all service load conditions; wall has to remain elastic; (2) masonry wall shall be fully grouted in accordance with ESR-4561 Section 3.2; (3) condition of use requirements in accordance with ESR-4561 Section 5.0 is satisfied. When expansion anchors are used, 50 percent of alternate bolts in a group shall be tension tested or torque tested per 2013 CBC Section 1913A.7 or 2016/2019/2022 CBC Section 1910A.5. Testing shall be done in the presence of the special inspector and a report of the test results shall be submitted to the enforcement agency. If any anchors fail, test all previously untested anchors installed by the same trade until 20 consecutive anchors pass. Then resume the original test frequency. Refer to page A0.4 or A0.5 for test loads.

4) Concrete inserts shall be Hilti KCM-WF/PD, Dewalt/Powers Wood Knocker/Wood Knocker II+, or Caddy CRLW for installation in normal or sand lightweight concrete slabs or HIlti KCM-MD-SP/LP, Dewalt/Powers Bang-It+ or DDI+, or Caddy CRLM for installation in normal or sand lightweight concrete filled metal decks installed in accordance with applicable ICC Reports ICC ESR 4145, 3657, 3958, or 3864.

5) All welded attachments shall be minimum 70xx electrode welds. Minimum 60xx electrode welds may be used for steel thicknesses that are 12 gauge or less.

6) Metal decks for expansion anchor attachments and inserts shall be minimum 20 gauge with either a maximum 3 inch flute and minimum 1-1/2 inch cover or a maximum 1-1/2 inch flute and minimum 2-1/4 inch cover. Refer to appropriate M2 and N2 pages for allowable deck anchor attachments. Concrete fill shall be minimum 3000 psi sand lightweight concrete. *Note:* Metal decks with minimum 3000 psi stone aggregate concrete fill may use the sand lightweight concrete deck charts.

7) Concrete attachments are based on specified anchor bolts or inserts. Substitution of alternate anchors must be approved by Mason West and the enforcement agency on a job by job basis.

8) When installing drilled-in anchors in existing non-prestressed reinforced concrete, use care and caution to avoid cutting or damaging reinforcing bars. When installing them in existing prestressed concrete, locate the prestressed tendons by using a non-destructive method and do not cut or damage the tendons during installation.

9) Attachments are provided for wide flange structural steel members, open web steel trusses as well as wood trusses, joists and beams in Sections N3.11-3.13, N4.10-4.13.

MASON WEST
1601 E. Miraloma Ave. Placentia, CA 92870
TEL (714) 630 - 0701, www.masonwest.com

Jiefu "Jeff" Zhang, SE
California SE No. S5270

PAGE
A20.4

ELECTRICAL GENERAL NOTES (continued)

10) Screw anchors shall be Powers Screw-Bolt+/Hangermate+, Mason Ind. N.Y. SAST, or Hilti Kwik HUS-EZ/HUS-EZ I for minimum 3000 psi concrete slabs, beams, or walls and concrete filled decks (sand light or normal weight) installed in accordance with ICC Reports ICC ESR 3889, 2713 or 3027, respectively. Testing shall be done in the presence of the special inspector and a report of the test results shall be submitted to the enforcement agency. If any anchors fail, test all previously untested anchors installed by the same trade until 20 consecutive anchors pass. Then resume the original test frequency. Screw anchors shall not be tested using a torque wrench. Screw anchors may be loosened a maximum of one full turn to facilitate the positioning of a tension test collar. Following the tension test, the anchor shall be re-torqued in accordance with the manufacturer's installation instructions. Refer to page A0.6 or A0.7 for test loads.

Notes on Suspended Raceways:

1) Per 2013/2016 CBC Sections 1616A.1.18 and 1616A.1.23, ASCE 7-10 Section 13.1.4 and 13.6.5.6, design for the seismic forces are not required for Raceways where any of the following are satisfied:
   a) Component is positively attached to the structure; and the project is designated as Seismic Design Categories D, E or F; flexible connections are provided between the raceway and the component/equipment; and the raceway weighs 5 lbs/ft or less; or
   b) Trapeze assemblies are used to support raceways and the total operating weight of the raceway supported by trapeze assemblies is less than 10 lbs/ft; or
   c) The raceway is supported by hangers and each hanger in the raceway run is 12" or less in length from the raceway support point to the supporting structure. Where rod hangers are used with a diameter greater than 3/8", they shall be equipped with swivels, eye bolts or other devices to prevent inelastic bending of the rod; or
   d) The conduit is 2.5" trade size or smaller.

2) Section A23 of these guidelines details the "12 Inch Rule" exception described in Note 1c for Suspended Raceways.

3) Cable tray transverse and longitudinal brace spacing shall not exceed those specified by the manufacturer. Rigid Metal Conduit (RMC, Schedule 40 pipe), Intermediate Metal Conduit (IMC), and Electrical Metallic Tubing (EMT), shall be braced at spacings tabulated in Section S. Longitudinal brace spacings shall not exceed 3 times the tabulated transverse brace spacings. For cases where multiple conduits with varying brace spacings are supported on a trapeze, the smallest brace spacing shall govern. The seismic design engineer may design brace spacings for trapezed conduits based on combined conduits sections and/or by adding steel strengthening sections on a job by job basis subject to approval by the enforcement agency.

4) Transverse restraints for cable trays shall be installed at general support locations. Cable trays must be positively fastened to the support as detailed in Section E.

5) Seismic restraints for trapeze supported conduit shall be attached to the trapeze member at the hanger locations as detailed in Section F. Conduits supported by trapezes at seismic brace locations shall utilize Mason West, Inc. Type SSC, strut steel clamp (Refer to Page X8.0) for Rigid Metal Conduit (RMC, Schedule 40 pipe) and 2½" to 4" diameter EMT or IMC or Type SSCE, strut steel clamp for up to 2" diameter EMT or IMC (Refer to Page X8.0) utilizing details in Section F.

6) The conduit weights tabulated in the appendix for RMC, IMC, and EMT materials consider the conduit full of conductors to approximate the maximum operating weight. Similarly, the cable tray weight tabulated in the same section consider the cable trays full of cable as allowed by the National Electrical Code (NEC).

REVIEWED FOR CODE COMPLIANCE
OPM-0043
BY: William Staehlin
DATE: 01/23/2023
SANTA CLARA BUILDING DEPARTMENT

MASON WEST
1601 E. Miraloma Ave. Placentia, CA 92870
TEL (714) 630 - 0701, www.masonwest.com

Jiefu "Jeff" Zhang, SE
California SE No. S5270

ELECTRICAL GENERAL NOTES FOR 2019/2022 CBC (continued)

10) Screw anchors shall be Powers Screw-Bolt+/Hangermate+, Mason Ind. N.Y. SAST, or Hilti Kwik HUS-EZ/HUS-EZ I for minimum 3000 psi concrete slabs, beams, or walls and concrete filled decks (sand light or normal weight) installed in accordance with ICC Reports ICC ESR 3889, 2713 or 3027, respectively. Testing shall be done in the presence of the special inspector and a report of the test results shall be submitted to the enforcement agency. If any anchors fail, test all previously untested anchors installed by the same trade until 20 consecutive anchors pass. Then resume the original test frequency. Screw anchors shall not be tested using a torque wrench. Screw anchors may be loosened a maximum of one full turn to facilitate the positioning of a tension test collar. Following the tension test, the anchor shall be re-torqued in accordance with the manufacturer's installation instructions. Refer to page A0.6 or A0.7 for test loads.

Notes on Suspended Raceways:

1) Per 2019/2022 CBC Sections 1601A.1.4 & 1617A.1.18 applicable only to OSHPD-1,2,4,5 and 1R designated projects, distributed conduit, cable trays and raceways weighing 5 lbs/ft or less are exempt from design for the seismic forces of ASCE 7-16 Section 13.3. For remaining electrical distribution systems, per 2019/2022 CBC Section 1617A1.26, cable trays and raceways shall be designed for seismic forces and seismic relative displacements. In addition, conduit equal to or greater than 2.5" trade size and attached to panels, cabinets, or other equipment subject to seismic relative displacements shall be provided with flexible connections or designed for seismic forces and seismic relative displacements. Design for the seismic forces and relative displacements shall not be required for raceway and associated components to accommodate the relative displacement between component and piping, where the cable tray or raceway is positively attached to the structure, and where one of the following apply:
   a) Trapeze assemblies with $\frac{3}{8}$" or $\frac{1}{2}$" diameter rod hangers not exceeding 12" in length from the conduit, cable tray, or raceway support point to the connection at the supporting structure are used to support the cable tray or raceway, and the total weight supported by any single trapeze is 100 lbs or less; or
   b) The conduit, cable tray, or raceway is supported by individual rod hangers $\frac{3}{8}$" or $\frac{1}{2}$" in diameter, and each hanger in the raceway run is 12" or less in length from the conduit, cable tray, or raceway support point connection to the supporting structure, and the total weight supported by any single rod is 50 lbs or less.

2) Design for the seismic forces and relative displacements shall not be required for conduit, regardless of the value of Ip, where the conduit size is less than 2.5" trade size.

3) Cable tray transverse and longitudinal brace spacing shall not exceed those specified by the manufacturer. Rigid Metal Conduit (RMC, Schedule 40 pipe), Intermediate Metal Conduit (IMC), and Electrical Metallic Tubing (EMT), shall be braced at spacings tabulated in Section S. Longitudinal brace spacings shall not exceed 3 times the tabulated transverse brace spacings. For cases where multiple conduits with varying brace spacings are supported on a trapeze, the smallest brace spacing shall govern. The seismic design engineer may design brace spacings for trapezed conduits based on combined conduits sections and/or by adding steel strengthening sections on a job by job basis subject to approval by the enforcement agency.

4) Transverse restraints for cable trays shall be installed at general support locations. Cable trays must be positively fastened to the support as detailed in Section E.

REVIEWED FOR CODE COMPLIANCE
OPM-0043
BY: William Staehlin
DATE: 01/23/2023
CALIFORNIA BUILDING CODE, 2022

MASON WEST
1601 E. Miraloma Ave. Placentia, CA 92870
TEL (714) 630 - 0701, www.masonwest.com

Jiefu "Jeff" Zhang, SE
California SE No. S5270

PAGE
A20.5a

ELECTRICAL GENERAL NOTES (continued)

7) If a 2 piece rod is used to support raceways, minimum engagement of the rod in the coupling nut shall be equal to the rod diameter. Rods shall be run up tight in the coupling nut.

8) For vertical support methods at seismic brace locations other than what are detailed in this manual, the seismic design engineer must provide calculations and/or testing of any additional components or materials (e.g. hangers, clamps, etc.) to comply with the CBC on a job by job basis subject to review and approval by the enforcement agency.

9) Electrical pull boxes installed directly in-line with the conduit systems (no flexes) may be supported and laterally braced as part of the conduit bracing system. Where necessary, consider the ability of the conduit(s) to transfer gravity and seismic loads to adjacent vertical supports and braces.

Notes on Vertical Risers:

1) Vertical raceways supported at each floor shall be considered seismically braced if the penetration through each floor is tightly packed and the floor to floor spacing does not exceed the maximum brace spacing tabulated in Section S. Tops of risers exceeding 3 feet shall be provided with a 4-way brace. Where the 4-way brace is attached to the horizontal raceway, it shall be installed within 2 feet of the centerline of the riser.

2) Vertical raceways in an open shaft must be attached to steel supports with both steel supports and connections sized to accept the combined gravity and seismic loads. Thermal loads shall be considered, where applicable. Lateral seismic restraint spacings for conduit shall not exceed the spacings tabulated in Section S. Supports and connections must be engineered on a job by job basis subject to approval by the enforcement agency. Seismic relative displacement between floors shall be considered in the design.

3) A conduit penetrating a floor with the annular space packed with firestop may act as an all-directional brace at the end of a horizontal conduit run as described in Note 1 above and depicted on Page A24.0 if the distance from the centerline of the floor to the top of the horizontal conduit is less than 'A', where 'A' is a function of the maximum transverse brace spacing, 'S', as defined on Page A22.1.

REVIEWED FOR CODE COMPLIANCE
OPM-0043
DATE: 01/23/2023
CALIFORNIA BUILDING CODE, 2022

MASON WEST
1601 E. Miraloma Ave. Placentia, CA 92870
TEL (714) 630 - 0701, www.masonwest.com

Jiefu "Jeff" Zhang, SE
California SE No. S5270

ELECTRICAL GENERAL NOTES FOR 2019/2022 CBC (continued)

5) Seismic restraints for trapeze supported conduit shall be attached to the trapeze member at the hanger locations as detailed in Section F. Conduits supported by trapezes at seismic brace locations shall utilize Mason West, Inc. Type SSC, strut steel clamp (Refer to Page X8.0) for Rigid Metal Conduit (RMC, Schedule 40 pipe) and 2½" to 4" diameter EMT or IMC or Type SSCE, strut steel clamp for up to 2" diameter EMT or IMC (Refer to Page X8.0) utilizing details in Section F.

6) The conduit weights tabulated in the appendix for RMC, IMC, and EMT materials consider the conduit full of conductors to approximate the maximum operating weight. Similarly, the cable tray weight tabulated in the same section consider the cable trays full of cable as allowed by the National Electrical Code (NEC).

7) If a 2 piece rod is used to support raceways, minimum engagement of the rod in the coupling nut shall be equal to the rod diameter. Rods shall be run up tight in the coupling nut.

8) For vertical support methods at seismic brace locations other than what are detailed in this manual, the seismic design engineer must provide calculations and/or testing of any additional components or materials (e.g. hangers, clamps, etc.) to comply with the CBC on a job by job basis subject to review and approval by the enforcement agency.

9) Electrical pull boxes installed directly in-line with the conduit systems (no flexes) may be supported and laterally braced as part of the conduit bracing system. Where necessary, consider the ability of the conduit(s) to transfer gravity and seismic loads to adjacent vertical supports and braces.

Notes on Vertical Risers:

1) Vertical raceways supported at each floor shall be considered seismically braced if the penetration through each floor is tightly packed and the floor to floor spacing does not exceed the maximum brace spacing tabulated in Section S. Tops of risers exceeding 3 feet shall be provided with a 4-way brace. Where the 4-way brace is attached to the horizontal raceway, it shall be installed within 2 feet of the centerline of the riser.

2) Vertical raceways in an open shaft must be attached to steel supports with both steel supports and connections sized to accept the combined gravity and seismic loads. Thermal loads shall be considered, where applicable. Lateral seismic restraint spacings for conduit shall not exceed the spacings tabulated in Section S. Supports and connections must be engineered on a job by job basis subject to approval by the enforcement agency. Seismic relative displacement between floors shall be considered in the design.

3) A conduit penetrating a floor with the annular space packed with firestop may act as an all-directional brace at the end of a horizontal conduit run as described in Note 1 above and depicted on Page A24.0 if the distance from the centerline of the floor to the top of the horizontal conduit is less than 'A', where 'A' is a function of the maximum transverse brace spacing, 'S', as defined on Page A22.1.

HCAi
OPM-0043
DATE: 01/23/2023
REVIEWED FOR CODE COMPLIANCE
CALIFORNIA BUILDING CODE

MASON WEST
1601 E. Miraloma Ave. Placentia, CA 92870
TEL (714) 630 - 0701, www.masonwest.com

Jiefu "Jeff" Zhang, SE
California SE No. S5270

PAGE
A20.6a

ELECTRICAL DESIGN PROCEDURE

Follow the five steps below to determine the seismic kit installation, hanger and brace connection details that pertain to a specific suspended electrical system. An example is provided on the following pages.

Step 1. **Determine 'g' Forces:**
Calculate the lateral acceleration, F_P, and vertical acceleration, F_{PV}, in terms of 'g' using the equations outlined on page A20.0 for each level of the building.

Step 2. **Determine Operating Weight (lbs/ft or lbs):**
Determine the operating weight, W_P, of the distribution system (lbs/ft) or component (lbs) to be seismically braced. Refer to the appendix APP3.0 for raceway weights.

Step 3. **Determine Seismic Forces (lbs):**
Determine the maximum allowable brace spacings from page A20.5, note 3 and Section S. *If you choose to use the pre-designed schedules in Section B, skip the remainder of this step.*
Calculate the maximum lateral and vertical forces applied to the seismic brace system. Resolve the maximum lateral force to the brace, F_P, and maximum load on the hanger rod, T_{Rod}.

For trapeze supported conduit, determine the maximum allowable brace spacing from page A20.5, Section S and Section X8.0. *If you choose to use the pre-designed schedules in Section B, skip the remainder of this step.*
Calculate the maximum lateral and vertical forces applied to the seismic brace system. Resolve the maximum lateral force to the brace, F_P, and maximum load on the hanger rod, T_{Rod}.

The resultant compression load on the hanger rod at seismic brace locations may be calculated to determine if rod stiffening is required.

Check trapeze seismic attachment to conduit. Use tables in Section S4 to check the capacities of the strut clamps to strut trapezes.

Step 4. **Select Seismic Kit Installation, Hanger and Brace connection Details:** Select the appropriate details from the schedules in Section B for individually suspended conduit or raceways on trapeze based on maximum 'g' force, system weight per foot or conduit size and maximum transverse, longitudinal and all directional brace spacing.
If you calculated the seismic forces in step 3, verify the details selected are correct by comparing the calculated lateral force, F_P, and load on the hanger rod, T_{Rod}, with the rated loads tabulated on the detail sheets. If F_P and T_{Rod} are less than or equal to the tabulated rated loads, the details are acceptable.

Step 5. **Select Trapeze Member (where applicable):**
Select the trapeze member from the tables in Section B or T for transverse, longitudinal and all-directional seismic braces based on 'g' force and maximum span of trapeze member.

REVIEWED FOR CODE COMPLIANCE
HCAI
OPM-0043
BY: William Staehlin
DATE: 01/23/2023
CALIFORNIA BUILDING CODE 2022

MASON WEST
1601 E. Miraloma Ave. Placentia, CA 92870
TEL (714) 630 - 0701, www.masonwest.com

Jiefu "Jeff" Zhang, SE
California SE No. S5270

PAGE
A21.0

ELECTRICAL DESIGN PROCEDURE (continued)

Example:

18" x 4" cable tray is suspended within a 3 story poured-in place concrete building with basement. The cable tray is supported at every 8 feet. The elevation of each floor, including the basement, is 15 feet. The short period spectral acceleration, S_{DS}, listed on the contract structural drawings, is 1.02. The component importance factor, $I_P = 1.5$.

Note: When anchoring to concrete, allowable loads have been reduced by the concrete overstrength factor, Ωo, where applicable, in Sections M & N. Therefore, Ωo is not used when calculating applied seismic forces in this example.

Step 1. **Determine 'g' Forces**

Component amplification and response modification factors for suspended cable trays are as follows:

$a_P = 2.5$; $R_P = 6.0$

Therefore,

$$F_P = (0.7)\frac{0.4(2.5)(1.02)W_P}{(6.0)/(1.5)}(1+2\frac{z}{h}) = 0.18(1+2\frac{z}{h})W_P$$

$$F_{P(min)} = (0.7)(0.3)(1.02)(1.5)W_P = 0.32W_P$$

$$F_{P(max)} = (0.7)(1.6)(1.02)(1.5)W_P = 1.71W_P$$

$$F_{PV} = (0.7)(0.2)(1.02)W_P = 0.14W_P$$

Tabulated below are the 'g' forces for each level of the building

Floor Level	F_P	F_{PV}
Basement	0.32g	0.14g
1	0.32g	0.14g
2	0.42g	0.14g
3	0.54g	0.14g

Step 2. **Determine Operating Weight (lbs/ft):**

From page APP3.0, the operating weight of a 18" x 4" cable tray is 27.0 lbs/ft.

REVIEWED FOR CODE COMPLIANCE
HCAi
OPM-0043
BY: William Staehlin
DATE: 01/23/2023
CALIFORNIA BUILDING CODE, 2022

MASON WEST
1601 E. Miraloma Ave. Placentia, CA 92870
TEL (714) 630 - 0701, www.masonwest.com

Jiefu "Jeff" Zhang, SE
California SE No. S5270

PAGE
A21.1

ELECTRICAL DESIGN PROCEDURE (continued)

Step 3. **Determine Seismic Forces (lbs):**

From page A20.5 Note 3, the maximum transverse and longitudinal brace spacing for suspended cable tray is specified by the manufacturer. We will assume 40 feet transverse and 80 feet longitudinal brace spacing for this example.

Note: At this point, you have the option to calculate the seismic forces and loads on the hanger rods and complete this step or move on to step 4.

For Basement Level and Level 1,

F_P (Transverse) = 0.32 x 27.0 lbs/ft x 40 ft brace spacing = 346 lbs
F_P (Longitudinal) = 0.32 x 27.0 lbs/ft x 80 ft brace spacing = 691 lbs
F_{PV} = 0.14 x 27.0 lbs/ft x 8 ft support spacing = 30 lbs

Note: Fp does not need to be increased due to installation tolerances indicated in assembly details.

For seismic solid brace installations:

$T_{Rod} = F_P \tan(\text{brace angle}) + (27.0 \text{ lbs/ft} \times 8 \text{ ft} + F_{PV})/2 = 469$ lbs.

Note: Brace angle = 45 degrees for this example. Longitudinal loads considered split evenly to each rod.

For seismic cable brace installations:

$T_{Rod} = (27.0 \text{ lbs/ft} \times 8 \text{ ft} + F_{PV})/2 = 123$ lbs.

Note: In the case of cable trays, for seismic solid and cable brace T_{Rod} calculations, the gravity loads are assumed to be evenly distributed to each hanger. In the case of conduits on trapeze, for seismic solid and cable brace T_{Rod} calculations, 2/3 of the total gravity load is assumed as the worst case on each hanger. If this is not the case, make the necessary adjustment.

Similarly for Levels 2 and 3, F_P, F_{PV} and T_{Rod} are as tabulated below.

Floor Level	F_P	F_{PV}	T_{ROD}(Solid)	T_{ROD}(Cable)
Basement	346 lbs	30 lbs	469 lbs	123 lbs
1	346 lbs	30 lbs	469 lbs	123 lbs
2	454 lbs	30 lbs	577 lbs	123 lbs
3	583 lbs	30 lbs	706 lbs	123 lbs

$C_{Rod} = F_P \tan(\text{brace angle}) + F_{PV} - 0.9Wp$
$= 346 \text{ lbs} \times \tan(45 \text{ degrees}) + 30 \text{ lbs}/2 - 0.9 \times (27.0 \text{ lbs/ft} \times 8 \text{ ft})/2 = 264$ lbs.

Note: If $C_{Rod} \leq 0$, rod stiffeners are not required.

REVIEWED FOR CODE COMPLIANCE
HCAI
OPM-0043
BY: William Staehlin
DATE: 01/23/2023
CALIFORNIA BUILDING CODE 2022

MASON WEST
1601 E. Miraloma Ave. Placentia, CA 92870
TEL (714) 630 - 0701, www.masonwest.com

Jiefu "Jeff" Zhang, SE
California SE No. S5270

PAGE
A21.2

ELECTRICAL DESIGN PROCEDURE (continued)

Step 4. **Select Seismic Kit Installation, Hanger and Brace connection Details:**

For an 18" x 4" cable tray with operating weight of 27.0 lbs/ft, acceptable seismic kit installation, hanger and connection details from the charts in Section B for each level of the building are as tabulated below.

Seismic Solid (Rigid) Brace, Hanger and Brace connection Details

Floor Level	Fp	Section B Page	Tran/Long Spacing	Kit Installation Details			Trans./ Long. Hanger Conn. Desig.	All Dir. Hanger Conn. Desig.	Brace Conn. Desig.
				Transverse	Longitudinal	All-Directional			
Basement	0.32g	B5.1	30'/60'	E1.20	E1.21	E1.22	50H	50M	50G
1	0.32g	B5.1	30'/60'	E1.20	E1.21	E1.22	50H	50M	50G
2	0.42g	B5.1	30'/60'	E1.20	E1.21	E1.22	50H	50M	50G
3	0.54g	B5.2	15'/30'	E1.20	E1.21	E1.22	50H	50M	50G

Seismic Cable (Standard) Brace, Hanger and Brace connection Details

Floor Level	Fp	Section B Page	Tran/Long Spacing	Kit Installation Details			Hanger Conn. Desig.	Brace Conn. Desig.
				Transverse	Longitudinal	All-Directional		
Basement	0.32g	B5.4	30'/60'	E2.20	E2.21	E2.22	50D	50G
1	0.32g	B5.4	30'/60'	E2.20	E2.21	E2.22	50D	50G
2	0.42g	B5.4	30'/60'	E2.20	E2.21	E2.22	50D	50G
3	0.54g	B5.5	15'/30'	E2.20	E2.21	E2.22	50D	50G

REVIEWED FOR CODE COMPLIANCE
HCAI
OPM-0043
BY: William Staehlin
DATE: 01/23/2023
CALIFORNIA BUILDING CODE 2022

For calculated F_P and T_{ROD} select the appropriate details in Section E, M and N by comparing the calculated values with the tabulated values indicated on each detail.

Step 5. **Select Trapeze Member (where applicable):**

For cable tray on trapeze weighing 27.0 lbs/ft supported by a trapeze member with a maximum span between hanger rods of 48 in. and the seismic accelerations calculated in step 2, go to the tables in Section T3 to find the allowable trapeze members for transverse, longitudinal and all-directional seismic braces for each level of the building. For transverse brace spacing of 30 feet and longitudinal/all-directional brace spacing of 60 feet:

Trapeze Member at Longitudinal and All-Directional Brace Locations

Floor Level	Fp	Section T Page	Longitudinal	All-Directional
Basement	0.32g	T3.2	1-5/8" Single Strut	1-5/8" Single Strut
1	0.32g	T3.2	1-5/8" Single Strut	1-5/8" Single Strut
2	0.42g	T3.3	1-5/8" Single Strut	1-5/8" Single Strut
3	0.54g	T3.4	1-5/8" Single Strut	1-5/8" Single Strut

Refer to page T3.0 for trapeze member at transverse brace locations; for these cases, member to be 1-5/8" Single Strut.

MASON WEST
1601 E. Miraloma Ave. Placentia, CA 92870
TEL (714) 630 - 0701, www.masonwest.com

Jiefu "Jeff" Zhang, SE
California SE No. S5270

PAGE
A21.3

ELECTRICAL DESIGN PROCEDURE (continued)

Example:

(5) 1½" and (6) 2" IMC conduits are suspended on the top of a trapeze support within a 3 story poured-in place concrete building with basement. The conduits are supported at every 8 feet. The elevation of each floor, including the basement, is 15 feet. The short period spectral acceleration, S_{DS}, listed on the contract structural drawings, is 1.02. The component importance factor, $I_P = 1.5$.

Note: When anchoring to concrete, allowable loads have been reduced by the concrete overstrength factor, Ωo, where applicable, in Sections M & N. Therefore, Ωo is not used when calculating applied seismic forces in this example.

Step 1. **Determine 'g' Forces**

Component amplification and response modification factors for suspended conduits are as follows:

$a_P = 2.5$; $R_P = 6.0$

Therefore,

$$F_P = (0.7)\frac{0.4(2.5)(1.02)W_P}{(6.0)/(1.5)}(1+2\frac{Z}{h}) = 0.18(1+2\frac{Z}{h})W_P$$

$$F_{P(min)} = (0.7)(0.3)(1.02)(1.5)W_P = 0.32W_P$$

$$F_{P(max)} = (0.7)(1.6)(1.02)(1.5)W_P = 1.71W_P$$

$$F_{PV} = (0.7)(0.2)(1.02)W_P = 0.14W_P$$

Tabulated below are the 'g' forces for each level of the building

Floor Level	F_P	F_{PV}
Basement	0.32g	0.14g
1	0.32g	0.14g
2	0.42g	0.14g
3	0.54g	0.14g

Step 2. **Determine Operating Weight (lbs/ft):**

From page APP3.0, the operating weight of (5) 1½" (3.42 lbs/ft) and (6) 2" (5.04 lbs/ft) IMC conduits is 47.3 lbs/ft.

REVIEWED FOR CODE COMPLIANCE
HCAi
OPM-0043
BY: William Staehlin
DATE: 01/23/2023
CALIFORNIA BUILDING CODE, 2022

MASON WEST
1601 E. Miraloma Ave. Placentia, CA 92870
TEL (714) 630 - 0701, www.masonwest.com

Jiefu "Jeff" Zhang, SE
California SE No. S5270

PAGE
A21.4

ELECTRICAL DESIGN PROCEDURE (continued)

Step 3. **Determine Seismic Forces (lbs):**

From page A20.5 Note 3, the maximum transverse and longitudinal brace spacing for suspended IMC is specified in Section S (Page S2.1). The maximum transverse brace spacing is governed by the smallest conduit size, in this case, 1½" IMC. For Basement and Level 1 F_P of 0.32g, the 0.375g column lists 36 feet, for Level 2 F_P of 0.4g, the 0.5g column lists 33 feet, and for Level 3 F_P of 0.54g, the 0.625g column lists 31 feet. If we interpolate between the 0.5g and 0.625g columns, the value for the maximum transverse brace spacing is 32 feet. Per note 3 on page S2.1, the maximum longitudinal brace spacing may be 3 times the transverse brace spacing, or 96 feet. For this example, we will limit transverse brace spacing to 30 ft and longitudinal brace spacing to 60 ft.

Note: At this point, you have the option to calculate the seismic forces and loads on the hanger rods and complete this step or move on to step 4.

For Basement Level and Level 1,

F_P (Transverse) = 0.32 x 47.3 lbs/ft x 30 ft brace spacing = 454 lbs
F_P (Longitudinal) = 0.32 x 47.3 lbs/ft x 60 ft brace spacing = 908 lbs
F_{PV} = 0.14 x 47.3 lbs/ft x 8 ft support spacing = 53 lbs

Note: Fp does not need to be increased due to installation tolerances indicated in assembly details.

For seismic solid brace installations:

$T_{Rod} = F_P \tan(\text{brace angle}) + (47.3 \text{ lbs/ft} \times 8 \text{ ft} + F_{PV}) * (⅔) = 742 \text{ lbs.}$

Note: Brace angle = 45 degrees for this example. Longitudinal loads considered split evenly to each rod.

For seismic cable brace installations:

$T_{Rod} = (47.3 \text{ lbs/ft} \times 8 \text{ ft} + F_{PV}) * (⅔) = 288 \text{ lbs.}$

Note: In the case of conduits on trapeze, for seismic solid and cable brace T_{Rod} calculations, 2/3 of the total gravity load is assumed as the worst case on each hanger. If this is not the case, make the necessary adjustment.

Similarly for Levels 2 and 3, F_P, F_{PV} and T_{Rod} are as tabulated below.

Floor Level	F_P	F_{PV}	T_{ROD}(Solid)	T_{ROD}(Cable)
Basement	454 lbs	53 lbs	742 lbs	288 lbs
1	454 lbs	53 lbs	742 lbs	288 lbs
2	596 lbs	53 lbs	884 lbs	288 lbs
3	766 lbs	53 lbs	1054 lbs	288 lbs

$C_{Rod} = F_P \tan(\text{brace angle}) + F_{PV} - 0.9Wp$
$= 454 \text{ lbs} \times \tan(45 \text{ degrees}) + (⅔) * 53 \text{ lbs} - 0.9 \times (⅔) * (47.3 \text{ lbs/ft} \times 8 \text{ ft}) = 262 \text{ lbs.}$

Note: If $C_{Rod} \leq 0$, rod stiffeners are not required.

Check the seismic clamps, MW-SSCE-15 (for 1½" IMC) and MW-SSCE-20 (for 2" IMC) for 30 feet transverse spacing and 60 feet longitudinal brace spacing on sheet S4.1. All brace spacings in chart meet or exceed the necessary brace spacings.

REVIEWED FOR CODE COMPLIANCE
HCAi
OPM-0043
BY: William Staehlin
DATE: 01/23/2023
CALIFORNIA BUILDING CODE, 2022

MASON WEST
1601 E. Miraloma Ave. Placentia, CA 92870
TEL (714) 630 - 0701, www.masonwest.com

Jiefu "Jeff" Zhang, SE
California SE No. S5270

PAGE
A21.5

ELECTRICAL DESIGN PROCEDURE (continued)

Step 4. **Select Seismic Kit Installation, Hanger and Brace connection Details:**

For a set of conduits with operating weight of 47.3 lbs/ft, acceptable seismic kit installation, hanger and connection details from the charts in Section B for each level of the building are as tabulated below.

Seismic Solid (Rigid) Brace, Hanger and Brace connection Details

Floor Level	Fp	Section B Page	Tran/Long Spacing	Kit Installation Details			Trans./ Long. Hanger Conn. Desig.	All Dir. Hanger Conn. Desig.	Brace Conn. Desig.
				Transverse	Longitudinal	All-Directional			
Basement	0.32g	B1.13	30'/60'	F1.33	F1.34	F1.45	63L	75Q	63J
1	0.32g	B1.13	30'/60'	F1.33	F1.34	F1.45	63L	75Q	63J
2	0.42g	B1.13	30'/60'	F1.33	F1.34	F1.45	63L	75Q	63J
3	0.54g	B1.14	15'/30'	F1.33	F1.34	F1.45	63L	75Q	63J

Seismic Cable (Standard) Brace, Hanger and Brace connection Details

Floor Level	Fp	Section B Page	Tran/Long Spacing	Kit Installation Details			Hanger Conn. Desig.	Brace Conn. Desig.
				Transverse	Longitudinal	All-Directional		
Basement	0.32g	B1.16	30'/60'	F2.40	F2.41	F2.42	75G	63J
1	0.32g	B1.16	30'/60'	F2.40	F2.41	F2.42	75G	63J
2	0.42g	B1.16	30'/60'	F2.40	F2.41	F2.42	75G	63J
3	0.54g	B1.17	15'/30'	F2.40	F2.41	F2.42	75G	63J

REVIEWED FOR CODE COMPLIANCE
HCAI
OPM-0043
BY: William Staehlin
DATE: 01/23/2023
CALIFORNIA BUILDING CODE 2022

For calculated F_P and T_{ROD} select the appropriate details in Section F, M and N by comparing the calculated values with the tabulated values indicated on each detail.

Step 5. **Select Trapeze Member (where applicable):**

For a set of conduits on trapeze weighing 47.3 lbs/ft supported by a trapeze member with a maximum span between hanger rods of 48 in. and the seismic accelerations calculated in step 2, go to the tables in Section T2 to find the allowable trapeze members for transverse, longitudinal and all-directional seismic braces for each level of the building. For transverse brace spacing of 30 feet and longitudinal/all-directional brace spacing of 60 feet:

Trapeze Member at Longitudinal and All-Directional Brace Locations

Floor Level	Fp	Section T Page	Longitudinal	All-Directional
Basement	0.32g	T2.2	(2) 1-5/8" Double Strut	(2) 1-5/8" Double Strut
1	0.32g	T2.2	(2) 1-5/8" Double Strut	(2) 1-5/8" Double Strut
2	0.42g	T2.3	(2) 1-5/8" Double Strut	(2) 1-5/8" Double Strut
3	0.54g	T2.4	HSS2x2x¼	HSS2x2x¼

Refer to page T2.0 for trapeze member at transverse brace locations; for these cases, member to be 3-1/4" Single Strut.

MASON WEST
1601 E. Miraloma Ave. Placentia, CA 92870
TEL (714) 630 - 0701, www.masonwest.com

Jiefu "Jeff" Zhang, SE
California SE No. S5270

PAGE
A21.6

LAYOUT OF SEISMIC BRACES FOR INDIVIDUALLY SUSPENDED CONDUIT

Step 1. Separate the layout of the system into individual straight runs. A straight run is defined as a section of the utility between changes in direction. If an offset(s) occurs between changes of direction it may be neglected if the distance perpendicular to the run is less than the offset length, $\frac{S}{10}$, where S is the maximum transverse brace spacing tabulated in Section S.

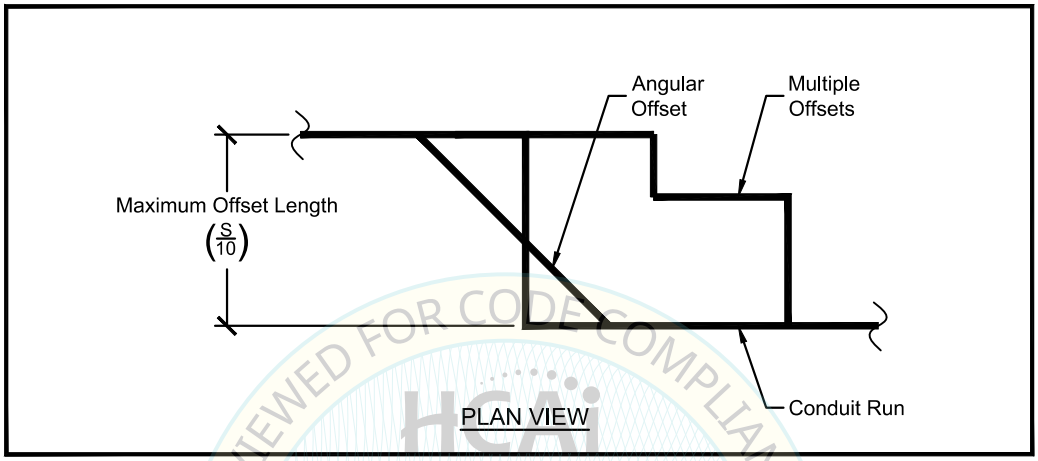

REVIEWED FOR CODE COMPLIANCE
HCAI
OPM-0043
BY: William Staehlin
DATE: 01/23/2023
CALIFORNIA BUILDING CODE 2022

Step 2. Each straight run must be braced in the transverse direction (perpendicular to the run) at each end.

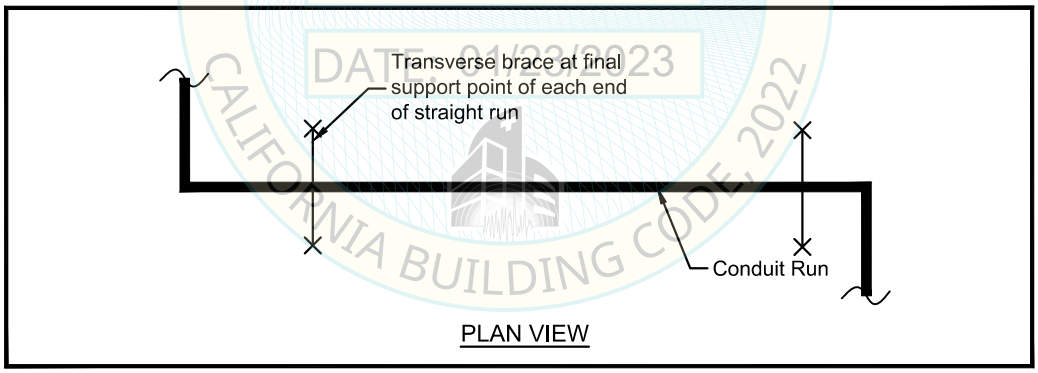

MASON WEST
1601 E. Miraloma Ave. Placentia, CA 92870
TEL (714) 630 - 0701, www.masonwest.com

Jiefu "Jeff" Zhang, SE
California SE No. S5270

PAGE
A22.0

LAYOUT OF SEISMIC BRACES FOR INDIVIDUALLY SUSPENDED CONDUIT (continued)

Step 3. Add transverse braces, if required, to limit the spacing(s) to the maximum spacing indicated in Section S.

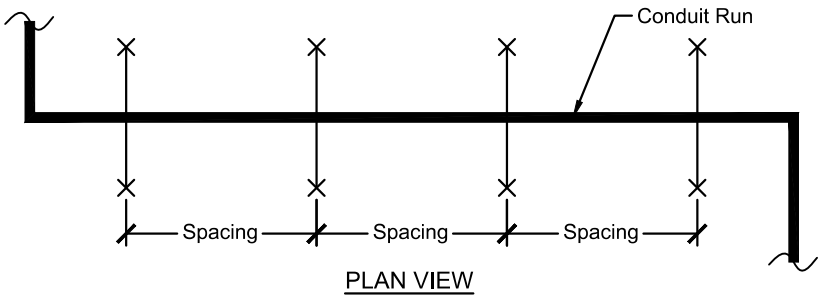

PLAN VIEW

Spacing [**Maximum transverse brace spacing**

Step 4. Each straight run must be braced in the longitudinal direction (parallel to the run) with at least one brace. Transverse braces within offset distance 'A' may be used in addition to or in lieu of independent longitudinal braces. The maximum length of conduit around a 90 degree turn (indicated as 'P' below) longitudinally braced from a transverse brace at offset distance 'A' is as follows:

When A [0.30*S, P = 0.5*S,
When A [0.25*S, P = 0.75*S,
When A [0.20*S, P = S,
When A [0.15*S, P = 1.5*S, where:

S = Maximum Allowable Transverse Brace Spacing (From Section S)
T = The distance between Transverse Braces
A = Offset Distance

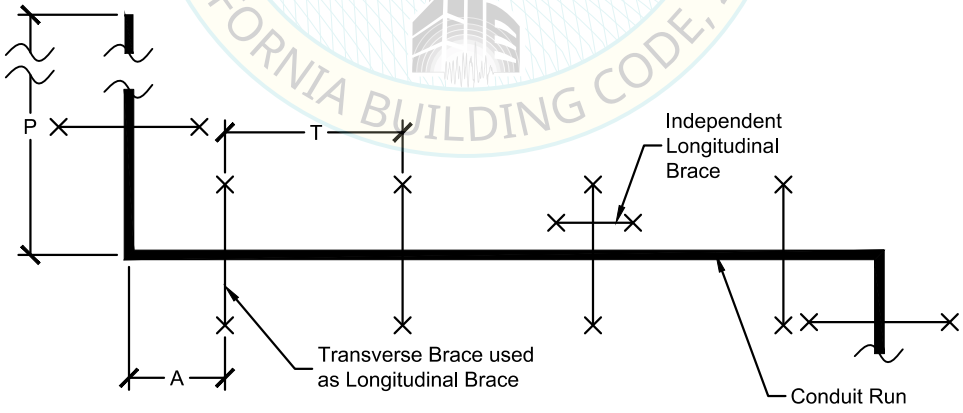

PLAN VIEW

REVIEWED FOR CODE COMPLIANCE
2022 CALIFORNIA BUILDING CODE
OPM-0043
BY: William Staehlin
DATE: 01/23/2023

MASON WEST
1601 E. Miraloma Ave. Placentia, CA 92870
TEL (714) 630 - 0701, www.masonwest.com

Jiefu "Jeff" Zhang, SE
California SE No. S5270

PAGE
A22.1

LAYOUT OF SEISMIC BRACES FOR INDIVIDUALLY SUSPENDED CONDUIT (continued)

Step 5. Multiple changes in direction may be treated as one complete system. Straight runs greater than the maximum offset length require 2 transverse braces. Straight runs less than the maximum offset length may require as few as one or no braces. (See layout below)

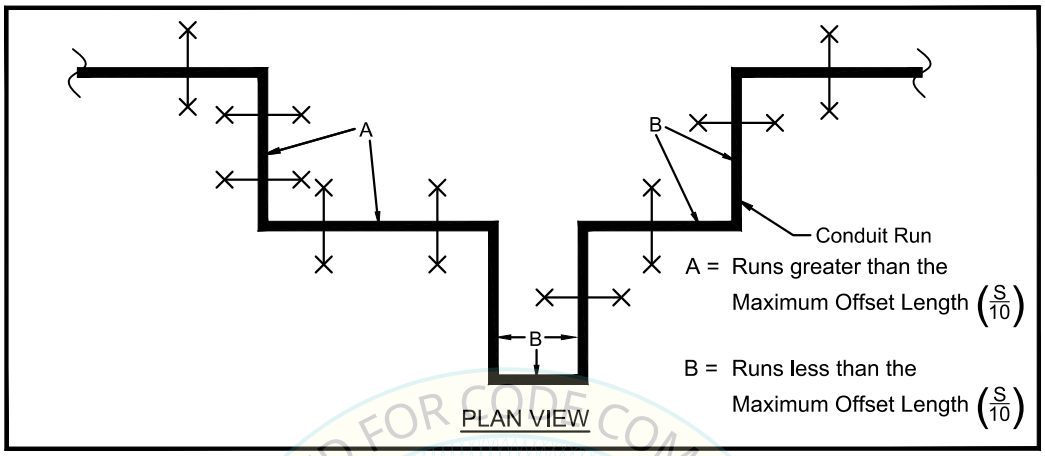

Step 6. Vertical drops to equipment must be restrained with a transverse brace at the final support point before the vertical drop. The distance from the transverse brace to the drop must be within the maximum offset distance 'A' as defined on Page A22.1. The maximum allowable length of the system braced from the transverse brace to the flexible connector is equal to 'P' as defined on Page A22.1. If this distance is greater than 'P', an additional brace is required at the end of the vertical drop by attaching to the floor. Consideration must be given to seismic relative displacements (SRD) imposed on conduit when braced to the floor.

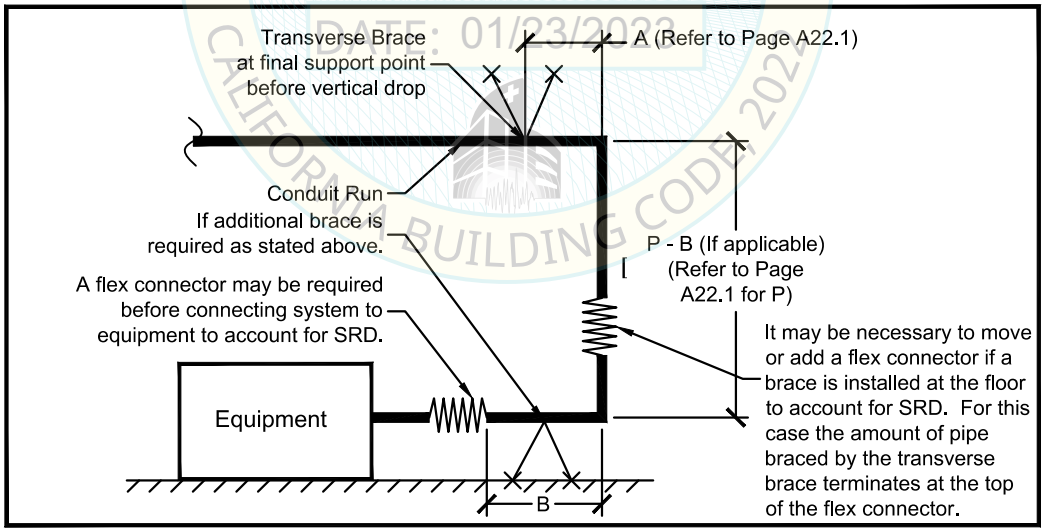

REVIEWED FOR CODE COMPLIANCE
OPM-0043
BY: William Staehlin
DATE: 01/23/2023
CALIFORNIA BUILDING CODE 2022

MASON WEST
1601 E. Miraloma Ave. Placentia, CA 92870
TEL (714) 630 - 0701, www.masonwest.com

Jiefu "Jeff" Zhang, SE
California SE No. S5270

PAGE
A22.2

LAYOUT OF SEISMIC BRACES FOR TRAPEZE SUSPENDED CABLE TRAYS

Step 1. Each straight run must be braced in the transverse direction (perpendicular to the run) at each end.

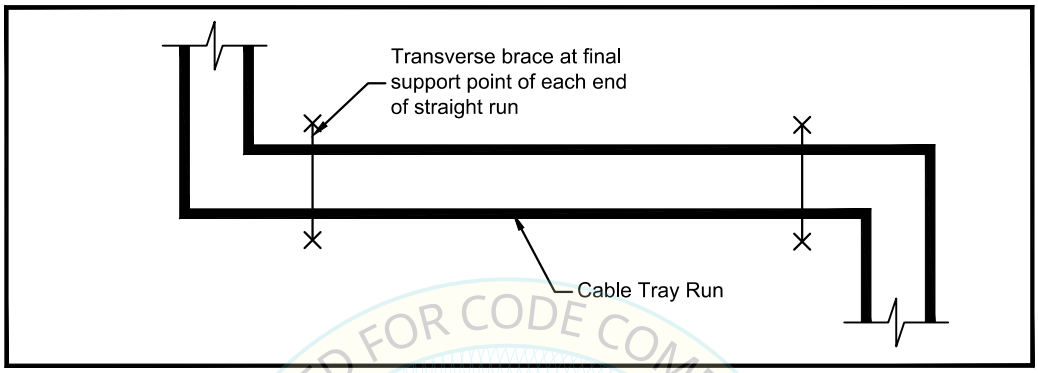

REVIEWED FOR CODE COMPLIANCE
HCAi
OPM-0043
BY: William Staehlin
DATE: 01/23/2023
CALIFORNIA BUILDING CODE 2022

Step 2. Add transverse braces, if required, to limit the spacing(s) to the maximum spacing indicated in Section A.

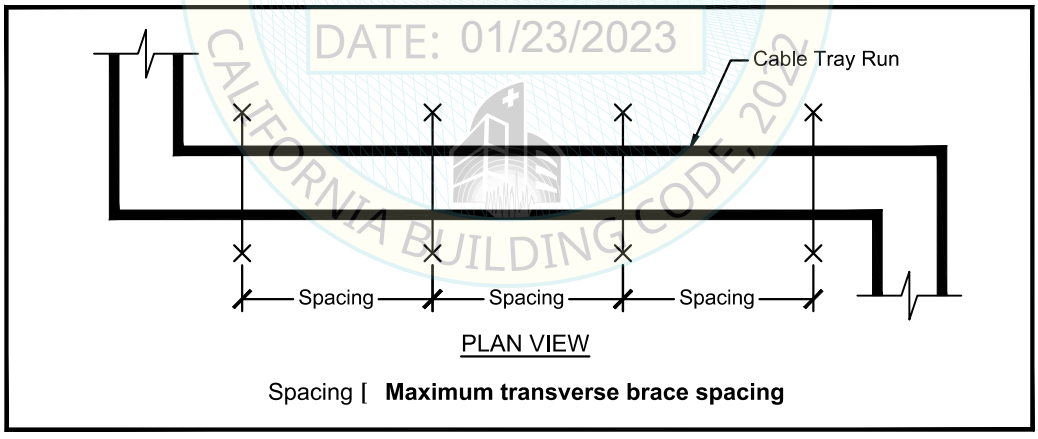

Spacing [**Maximum transverse brace spacing**

MASON WEST
1601 E. Miraloma Ave. Placentia, CA 92870
TEL (714) 630 - 0701, www.masonwest.com

Jiefu "Jeff" Zhang, SE
California SE No. S5270

PAGE
A22.3

LAYOUT OF SEISMIC BRACES FOR TRAPEZE SUSPENDED CABLE TRAYS (continued)

Step 3. Each straight run must be braced in the longitudinal direction (parallel to the run) with at least one brace.

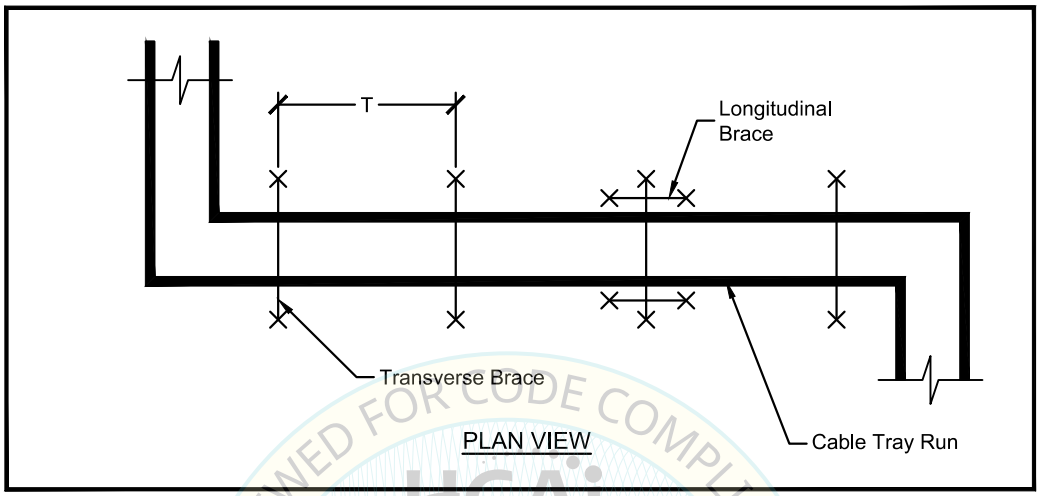

PLAN VIEW

REVIEWED FOR CODE COMPLIANCE
HCAi
OPM-0043
BY: William Staehlin
DATE: 01/23/2023
CALIFORNIA BUILDING CODE, 2022

MASON WEST
1601 E. Miraloma Ave. Placentia, CA 92870
TEL (714) 630 - 0701, www.masonwest.com

Jiefu "Jeff" Zhang, SE
California SE No. S5270

PAGE
A22.4

LAYOUT OF SEISMIC BRACES FOR TRAPEZE SUSPENDED CONDUIT

Step 1a. Separate the layout of the system into individual straight runs. A straight run is defined as a section of the utility between changes in direction. If an offset(s) occurs between changes of direction it may be neglected if the distance perpendicular to each pipe run is less than the offset length, $\frac{S}{10}$, where S is the maximum transverse brace spacing tabulated in Section S.

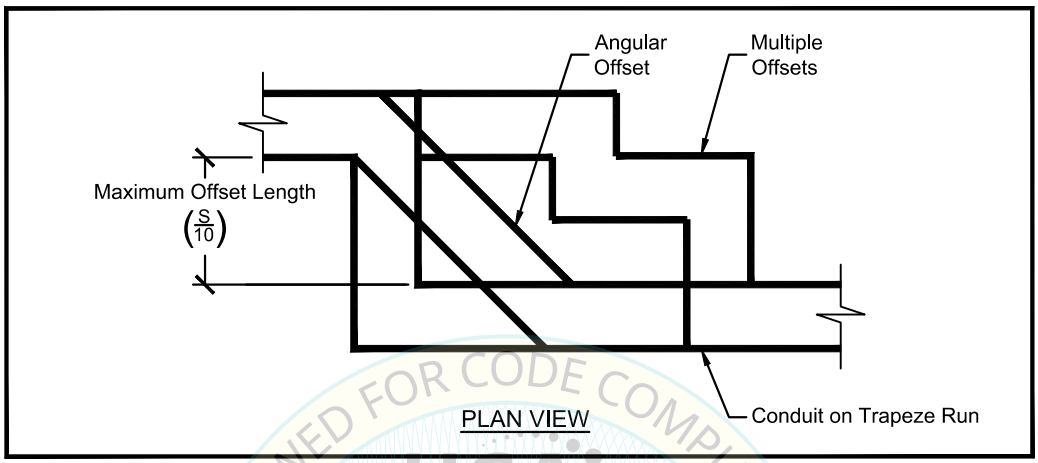

REVIEWED FOR CODE COMPLIANCE
HCAi
OPM-0043
BY: William Staehlin
DATE: 01/23/2023
CALIFORNIA BUILDING CODE 2022

Step 2a. Each straight run must be braced in the transverse direction (perpendicular to the run) at each end.

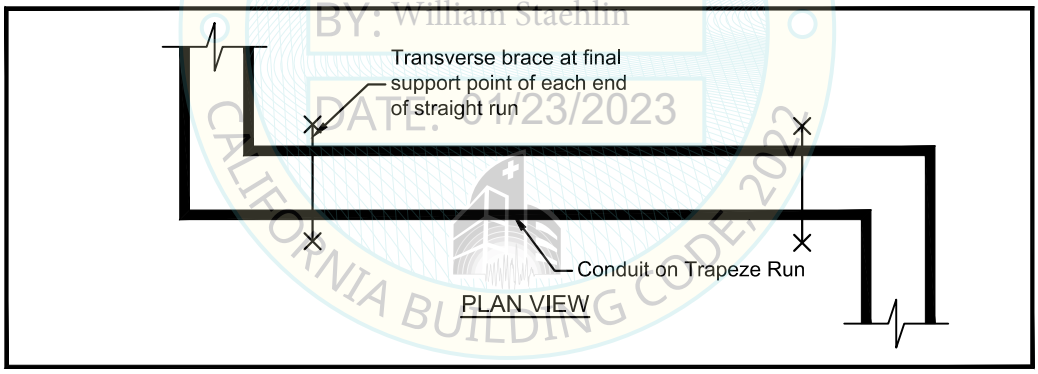

MASON WEST
1601 E. Miraloma Ave. Placentia, CA 92870
TEL (714) 630 - 0701, www.masonwest.com

Jiefu "Jeff" Zhang, SE
California SE No. S5270

LAYOUT OF SEISMIC BRACES
TRAPEZE SUSPENDED FOR CONDUIT (continued)

Step 3a. Add transverse braces, if required, to limit the spacing(s) to the maximum spacing indicated in Section S.

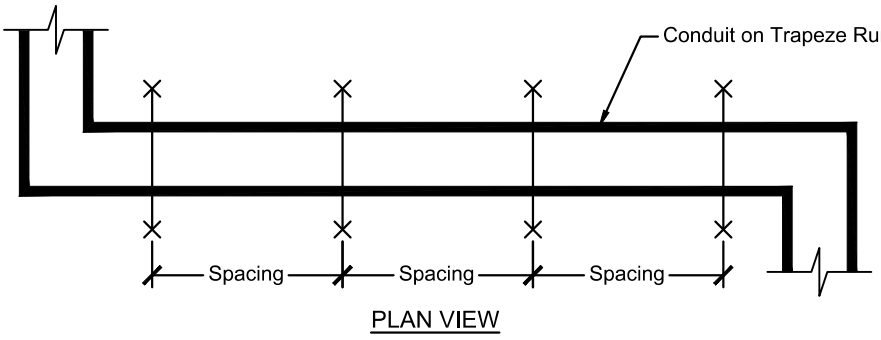

PLAN VIEW

Spacing [**Maximum transverse brace spacing**

Step 4a. Each straight run must be braced in the longitudinal direction (parallel to the run) with at least one brace. Transverse braces within offset distance 'A' may be used in addition to or in lieu of independent longitudinal braces. The maximum length of conduit around a 90 degree turn (indicated as 'P' below) longitudinally braced from a transverse brace at offset distance 'A' is as follows:

When A [0.30*S, P = 0.5*S,
When A [0.25*S, P = 0.75*S,
When A [0.20*S, P = S,
When A [0.15*S, P = 1.5*S, where:

S = Maximum Allowable Transverse Brace Spacing (From Section S)
T = The distance between Transverse Braces
A = Offset Distance

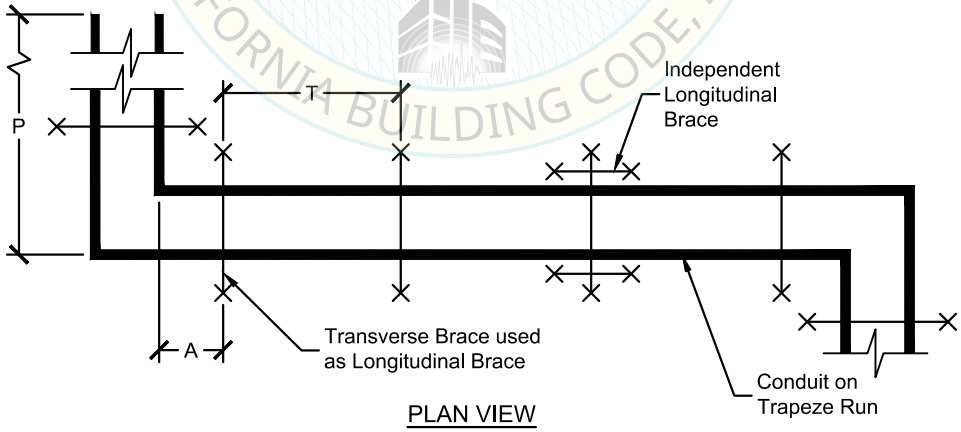

PLAN VIEW

REVIEWED FOR CODE COMPLIANCE
OPM-0043
BY: William Staehlin
DATE: 1/23/2023
CALIFORNIA BUILDING CODE, 2022

MASON WEST
1601 E. Miraloma Ave. Placentia, CA 92870
TEL (714) 630 - 0701, www.masonwest.com

Jiefu "Jeff" Zhang, SE
California SE No. S5270

PAGE
A22.6

LAYOUT OF SEISMIC BRACES FOR TRAPEZE SUSPENDED CONDUIT (continued)

Step 5a. Multiple changes in direction may be treated as one complete system. Straight runs greater than the maximum offset length require 2 transverse braces. Straight runs less than the maximum offset length may require as few as one or no braces. (See layout below)

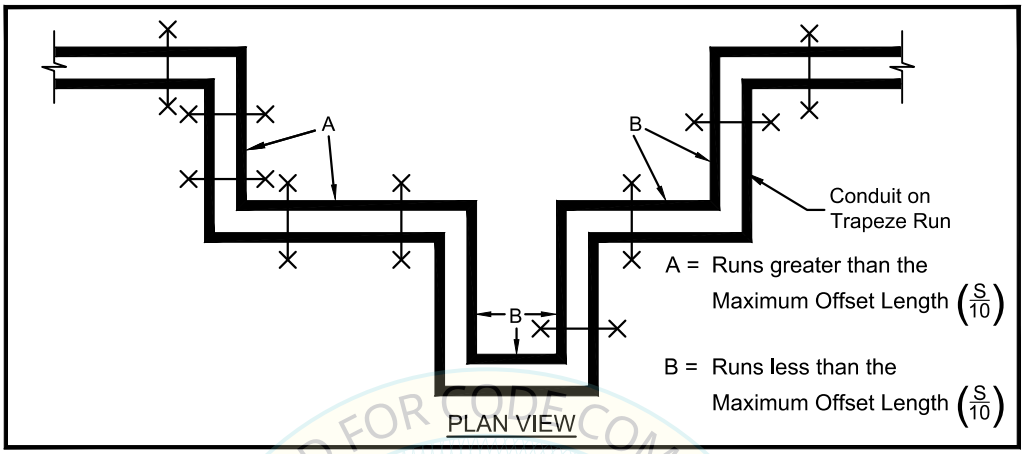

Step 6a. Vertical drops to equipment must be restrained with a transverse brace at the final support point before the vertical drop. The distance from the transverse brace to the drop must be within the maximum offset distance 'A' as defined on Page A22.6. The maximum allowable length of the system braced from the transverse brace to the flexible connector is equal to 'P' as defined on Page A22.6. If this distance is greater than 'P', an additional brace is required at the end of the vertical drop by attaching to the floor. Consideration must be given to seismic relative displacements (SRD) imposed on the conduit when braced to the floor.

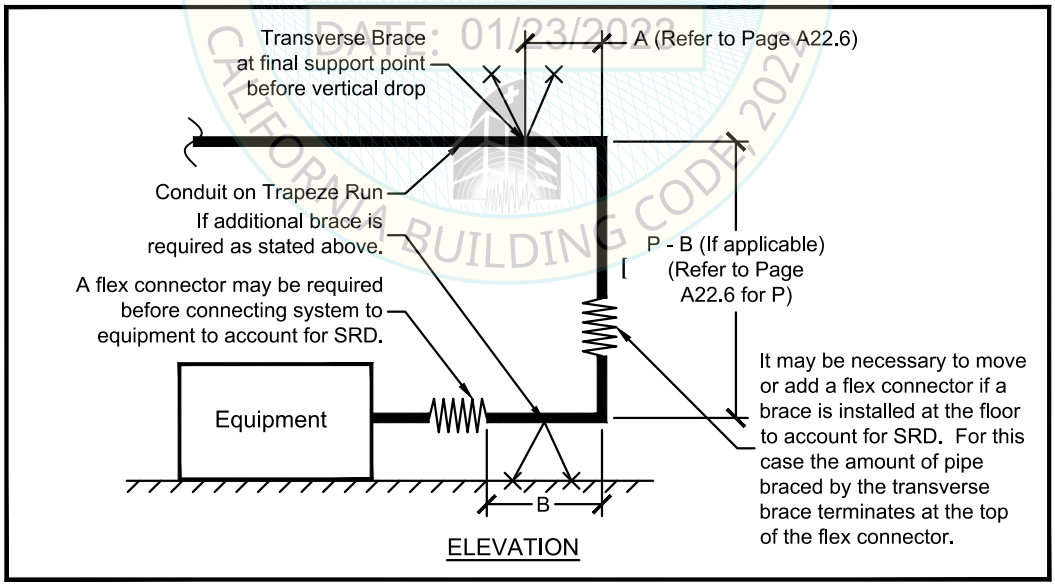

REVIEWED FOR CODE COMPLIANCE
HCAI
BY: William Staehlin
DATE: 01/23/2023
CALIFORNIA BUILDING CODE 2022

MASON WEST
1601 E. Miraloma Ave. Placentia, CA 92870
TEL (714) 630 - 0701, www.masonwest.com

Jiefu "Jeff" Zhang, SE
California SE No. S5270

PAGE
A22.7

12" RULE FOR SUSPENDED RACEWAYS

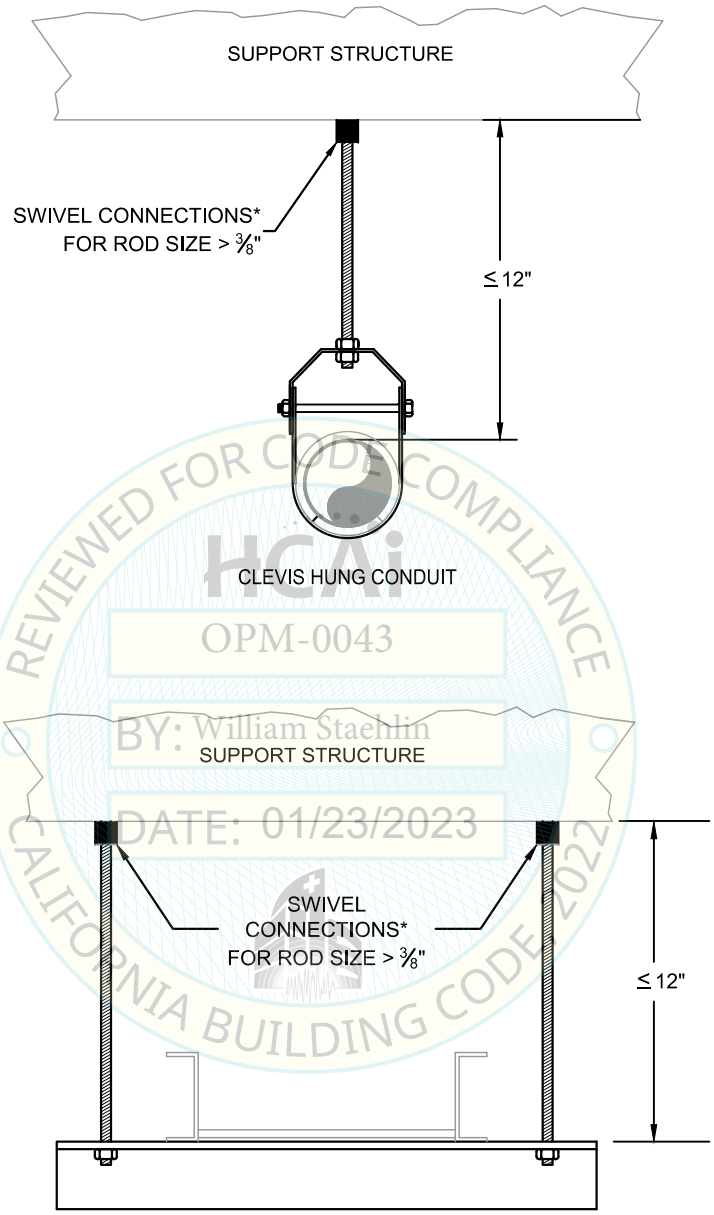

CONDUIT OR CABLE TRAY ON TRAPEZE

REVIEWED FOR CODE COMPLIANCE
HCAi
OPM-0043
BY: William Staehlin
DATE: 01/23/2023
CALIFORNIA BUILDING CODE 2022

*NOTE: CONNECTIONS COMPLYING INCLUDE SWIVEL JOINTS, EYE BOLTS, ETC.

MASON WEST
1601 E. Miraloma Ave. Placentia, CA 92870
TEL (714) 630 - 0701, www.masonwest.com

Jiefu "Jeff" Zhang, SE
California SE No. S5270

PAGE
A23.0

SEISMIC BRACE REQUIREMENTS
FOR CONDUITS ON MULTI-LAYER TRAPEZES

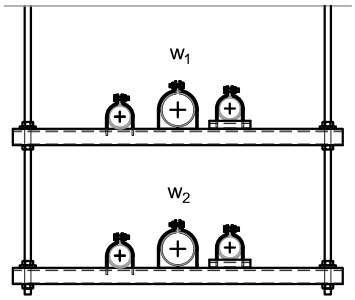

CASE 1
IF w_{total} < 10 LB/FT,
NO BRACING REQ'D

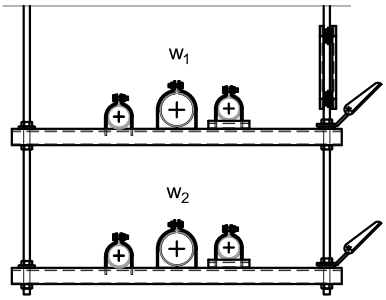

CASE 2
IF $w_1 \geq$ 10 LB/FT AND $w_2 \geq$ 10 LB/FT,
BRACE EACH LAYER INDEPENDENTLY

REVIEWED FOR CODE COMPLIANCE
HCAi
OPM-0043
BY: William Staehlin
DATE: 01/23/2023
CALIFORNIA BUILDING CODE, 2022

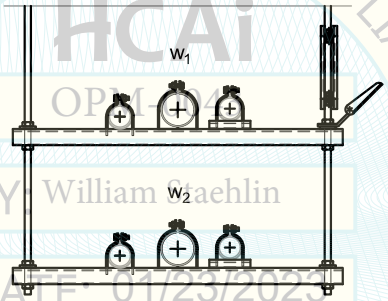

CASE 3
IF $w_{total} \geq$ 10 LB/FT AND $w_2 <$ 10 LB/FT,
BRACE TOP TRAPEZE FOR w_{total}
(BOTTOM TRAPEZE NEED NOT BE BRACED PROVIDED THE
LOAD IS ACCOUNTED FOR IN THE NEAREST BRACED LAYER)

NOTES:
1) REGISTERED DESIGN PROFESSIONAL (RDP) SHALL VERIFY BRACE REQUIREMENTS LISTED ON PAGE A20.5.
2) HANGER REACTIONS SHALL BE DETERMINED FROM TOTAL CONDUIT WEIGHT FROM ALL LAYERS.

MASON WEST
1601 E. Miraloma Ave. Placentia, CA 92870
TEL (714) 630 - 0701, www.masonwest.com

Jiefu "Jeff" Zhang, SE
California SE No. S5270

PAGE
A23.1

SEISMIC BRACE REQUIREMENTS
FOR CABLE TRAYS ON MULTI-LAYER TRAPEZES

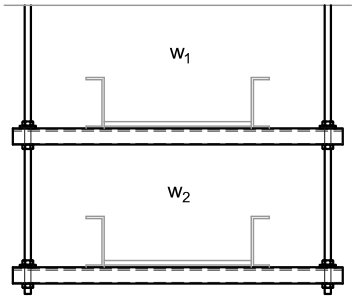

CASE 1
IF w_{total} < 10 LB/FT,
NO BRACING REQ'D

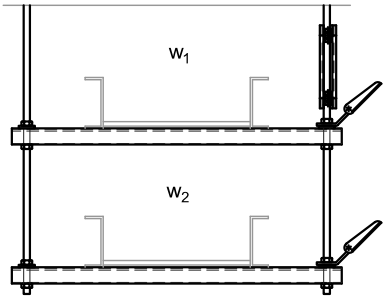

CASE 2
IF $w_1 \geq$ 10 LB/FT AND $w_2 \geq$ 10 LB/FT,
BRACE EACH LAYER INDEPENDENTLY

REVIEWED FOR CODE COMPLIANCE
HCAi
OPM-0043
BY: William Staehlin
DATE: 01/23/2023
CALIFORNIA BUILDING CODE, 2022

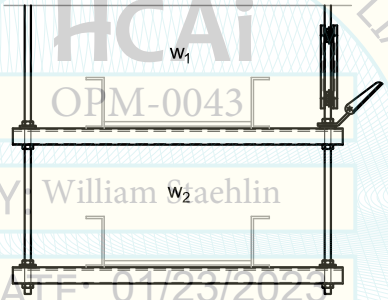

CASE 3
IF $w_{total} \geq$ 10 LB/FT AND $w_2 <$ 10 LB/FT,
BRACE TOP TRAPEZE FOR w_{total}
(BOTTOM TRAPEZE NEED NOT BE BRACED PROVIDED THE
LOAD IS ACCOUNTED FOR IN THE NEAREST BRACED LAYER)

NOTES:
1) REGISTERED DESIGN PROFESSIONAL (RDP) SHALL VERIFY BRACE REQUIREMENTS LISTED ON PAGE A20.5.
2) HANGER REACTIONS SHALL BE DETERMINED FROM TOTAL CABLE TRAY WEIGHT FROM ALL LAYERS.

MASON WEST
1601 E. Miraloma Ave. Placentia, CA 92870
TEL (714) 630 - 0701, www.masonwest.com

Jiefu "Jeff" Zhang, SE
California SE No. S5270

PAGE
A23.2

TRANSVERSE BRACE ALLOWABLE ANGLE VARIATIONS IN PLAN FOR INDIVIDUALLY SUSPENDED CONDUIT

THE ANGLE VARIATION MAY INCREASE BEYOND 2.5 DEGREES UP TO 15 DEGREES PROVIDED THE TRANSVERSE BRACES ARE SKEWED IN THE SAME DIRECTION AND A LONGITUDINAL BRACE OCCURS OPPOSITE THE SKEWED ANGLE DIRECTION AS SHOWN BELOW.

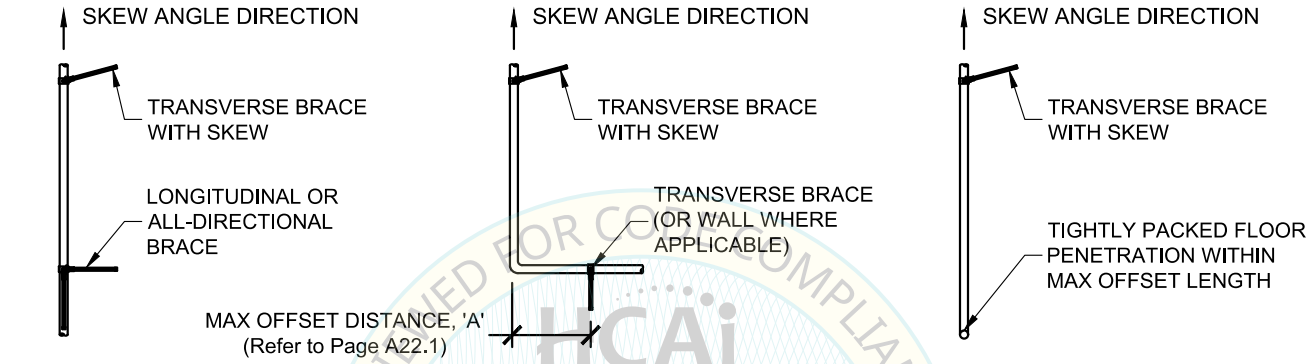

SOLID BRACE

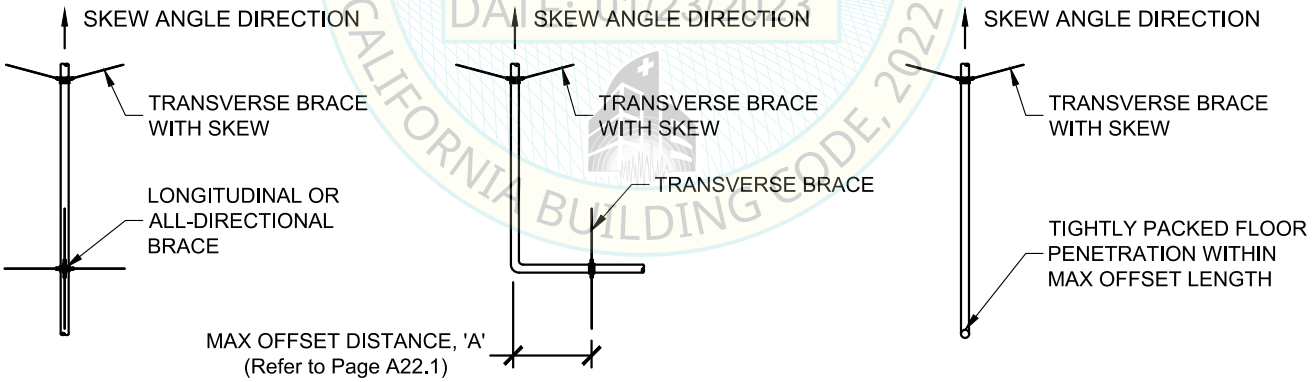

CABLE BRACE

NOTE: ANY OR ALL BRACE LOCATIONS ARE PERMITTED TO USE THE ANGLE VARIATION TO MEET FIELD CONDITIONS.

REVIEWED FOR CODE COMPLIANCE
HCAi
OPM-0043
BY: William Staehlin
DATE: 01/23/2023
CALIFORNIA BUILDING CODE, 2022

MASON WEST
1601 E. Miraloma Ave. Placentia, CA 92870
TEL (714) 630 - 0701, www.masonwest.com

Jiefu "Jeff" Zhang, SE
California SE No. S5270

PAGE
A24.0

TRANSVERSE BRACE ALLOWABLE ANGLE VARIATIONS IN PLAN FOR TRAPEZE SUSPENDED CABLE TRAY

THE ANGLE VARIATION MAY INCREASE BEYOND 2.5 DEGREES UP TO 15 DEGREES PROVIDED THE TRANSVERSE BRACES ARE SKEWED IN THE SAME DIRECTION AND A LONGITUDINAL BRACE OCCURS OPPOSITE THE SKEWED ANGLE DIRECTION AS SHOWN BELOW.

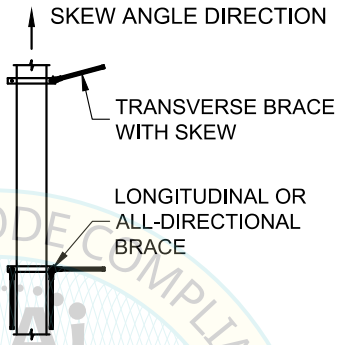

SOLID BRACE

REVIEWED FOR CODE COMPLIANCE
HCAi
OPM-0043
BY: William Staehlin
DATE: 01/23/2023
CALIFORNIA BUILDING CODE 2022

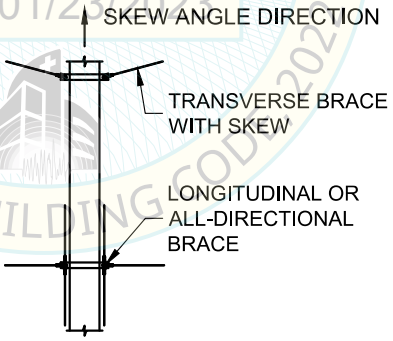

CABLE BRACE

NOTE: ANY OR ALL BRACE LOCATIONS ARE PERMITTED TO USE THE ANGLE VARIATION TO MEET FIELD CONDITIONS.

MASON WEST
1601 E. Miraloma Ave. Placentia, CA 92870
TEL (714) 630 - 0701, www.masonwest.com

Jiefu "Jeff" Zhang, SE
California SE No. S5270

PAGE
A24.1

TRANSVERSE BRACE ALLOWABLE ANGLE VARIATIONS IN PLAN FOR CONDUIT ON TRAPEZE

THE ANGLE VARIATION MAY INCREASE BEYOND 2.5 DEGREE UP TO 15 DEGREE PROVIDED THE TRANSVERSE BRACES ARE SKEWED IN THE SAME DIRECTION AND A LONGITUDINAL BRACE OCCURS OPPOSITE THE SKEWED ANGLE DIRECTION AS SHOWN BELOW.

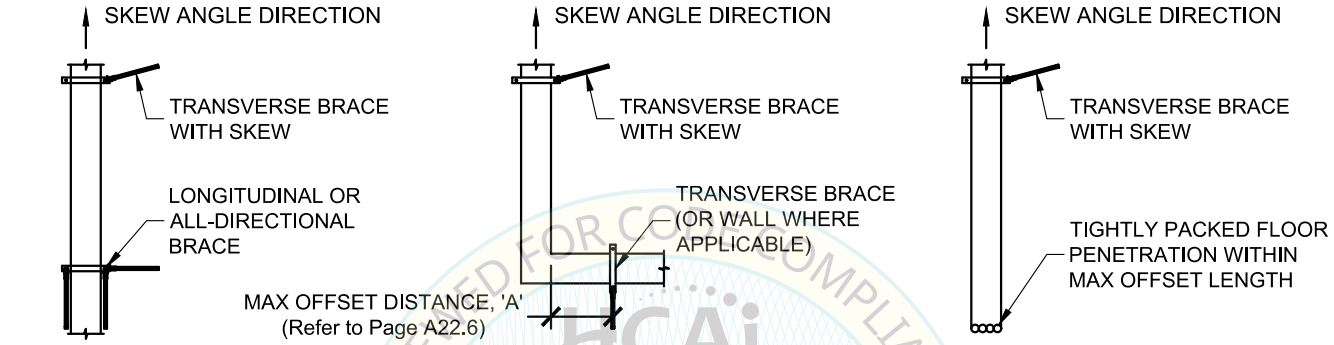

SOLID BRACE

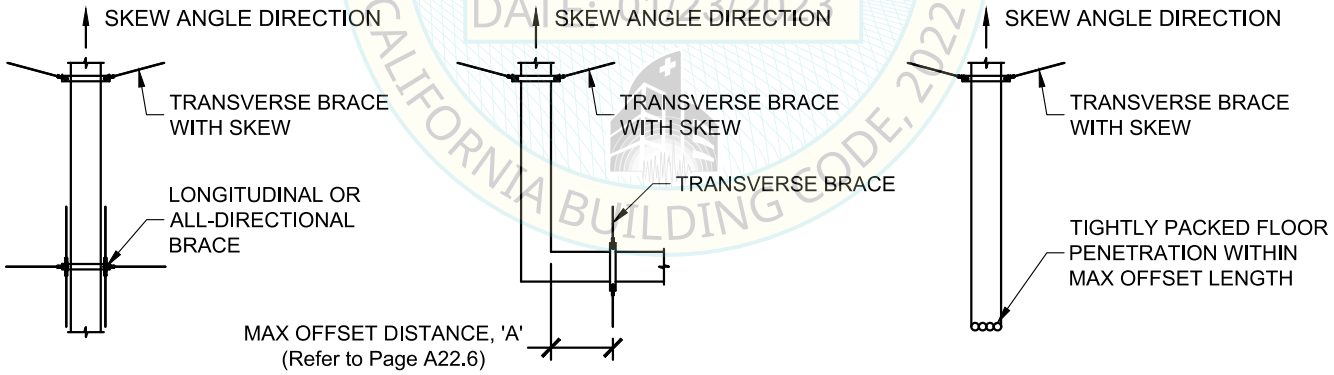

CABLE BRACE

NOTE: ANY OR ALL BRACE LOCATIONS ARE PERMITTED TO USE THE ANGLE VARIATION TO MEET FIELD CONDITIONS.

HCAi
OPM-0043
BY: William Staehlin
DATE: 01/23/2023
REVIEWED FOR CODE COMPLIANCE
CALIFORNIA BUILDING CODE, 2022

MASON WEST
1601 E. Miraloma Ave. Placentia, CA 92870
TEL (714) 630 - 0701, www.masonwest.com

Jiefu "Jeff" Zhang, SE
California SE No. S5270

PAGE
A24.2

ALTERNATE ARRANGEMENT OF SEISMIC BRACES FOR SUSPENDED RACEWAYS

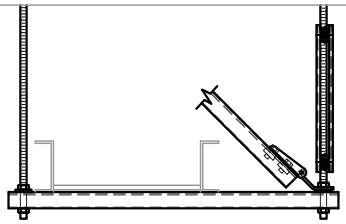

ELEVATION VIEW
SOLID BRACE INSTALLED
IN-BETWEEN HANGERS
(TRANSVERSE OR
ALL-DIRECTIONAL BRACE)

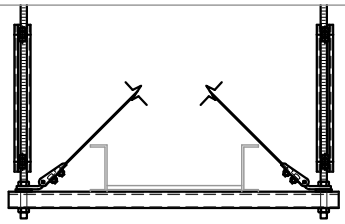

ELEVATION VIEW
CABLE BRACE INSTALLED
IN-BETWEEN HANGERS

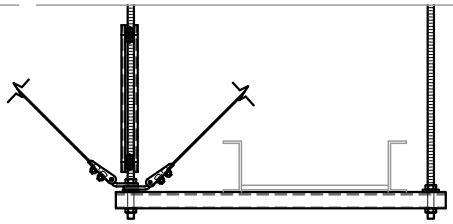

ELEVATION VIEW
CABLE BRACE INSTALLED AT
SINGLE HANGER
(TRANSVERSE BRACES ONLY)

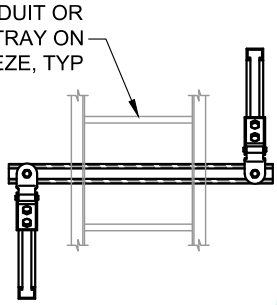

PLAN VIEW
LONGITUDINAL SOLID BRACES INSTALLED
IN ALTERNATING DIRECTIONS

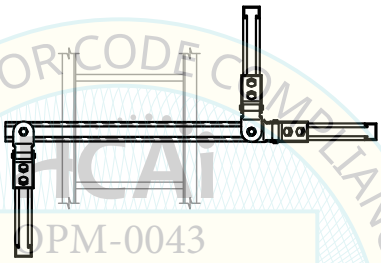

PLAN VIEW
ALL-DIRECTIONAL SOLID BRACES INSTALLED
IN ALTERNATING DIRECTIONS

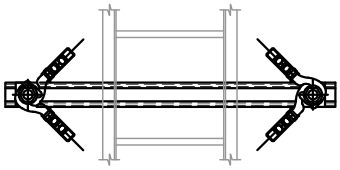

PLAN VIEW
CABLE X-PATTERN BRACE INSTALLED
IN-BETWEEN HANGERS

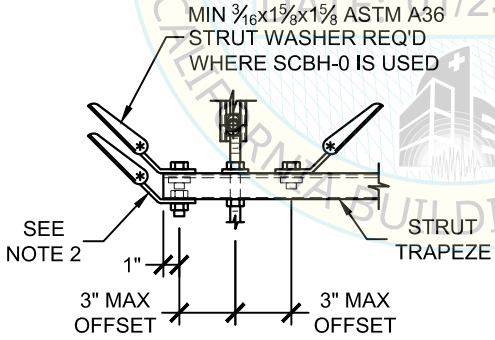

(TRANSVERSE
BRACE ONLY)

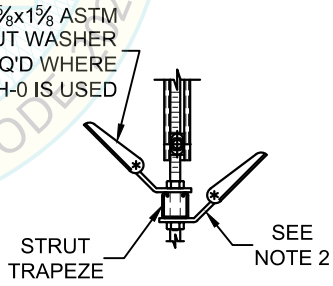

(LONGITUDINAL OR
ALL-DIRECTIONAL BRACE)

SEISMIC BRACE BRACKET OFFSET FROM HANGER RODS

REVIEWED FOR CODE COMPLIANCE
HCAi
OPM-0043
BY: William Staehlin
DATE: 01/23/2023
CALIFORNIA BUILDING CODE 2022

NOTES:
1) REFER TO APPROPRIATE DETAIL PAGES FOR DIMENSIONS AND NOTATIONS NOT SHOWN.
2) WHEN INSTALLING SHB TO BOTTOM OF TRAPEZE, MW-KY SHB KEY IS REQ'D (REF. X2.4).

MASON WEST
1601 E. Miraloma Ave. Placentia, CA 92870
TEL (714) 630 - 0701, www.masonwest.com

Jiefu "Jeff" Zhang, SE
California SE No. S5270

PAGE
A25.0

ALTERNATE ARRANGEMENT OF SEISMIC BRACES FOR CONDUITS ON TRAPEZE

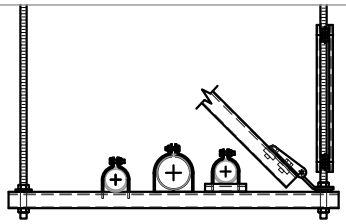

ELEVATION VIEW
SOLID BRACE INSTALLED
IN-BETWEEN HANGERS
(TRANSVERSE OR
ALL-DIRECTIONAL BRACE)

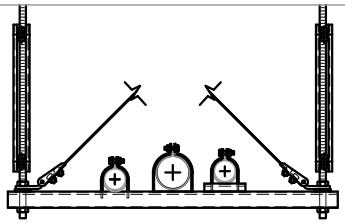

ELEVATION VIEW
CABLE BRACE INSTALLED
IN-BETWEEN HANGERS

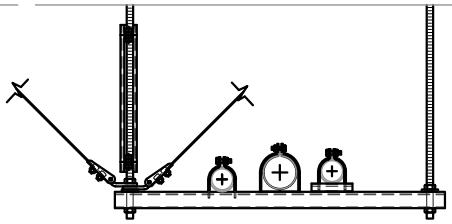

ELEVATION VIEW
CABLE BRACE INSTALLED AT
SINGLE HANGER
(TRANSVERSE BRACES ONLY)

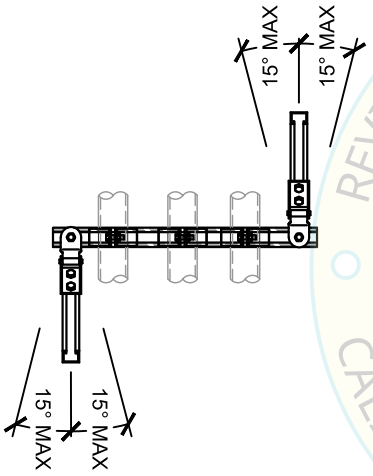

PLAN VIEW
LONGITUDINAL SOLID BRACES INSTALLED
IN ALTERNATING DIRECTIONS

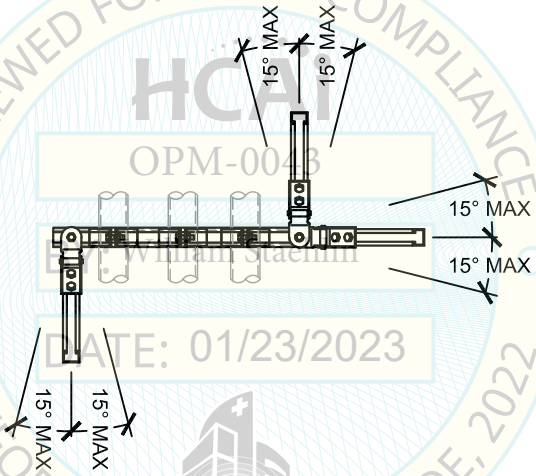

PLAN VIEW
ALL-DIRECTIONAL SOLID BRACES INSTALLED
IN ALTERNATING DIRECTIONS

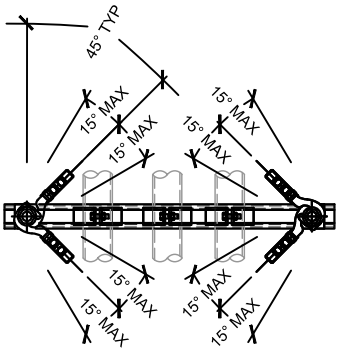

PLAN VIEW
CABLE X-PATTERN BRACE INSTALLED
IN-BETWEEN HANGERS

REVIEWED FOR CODE COMPLIANCE
HCAI
OPM-0043
By: William Staehlin
DATE: 01/23/2023
CALIFORNIA BUILDING CODE, 2022

NOTES:
1) REFER TO APPROPRIATE DETAIL F PAGES FOR DIMENSIONS AND NOTATIONS NOT SHOWN.

MASON WEST
1601 E. Miraloma Ave. Placentia, CA 92870
TEL (714) 630 - 0701, www.masonwest.com

Jiefu "Jeff" Zhang, SE
California SE No. S5270

PAGE
A25.1

ALTERNATE ARRANGEMENT OF SEISMIC BRACES FOR CONDUITS ON TRAPEZE

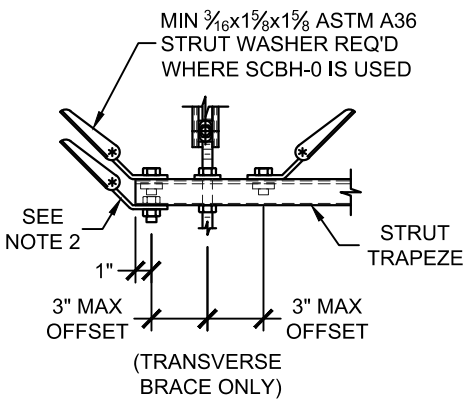

(TRANSVERSE BRACE ONLY)

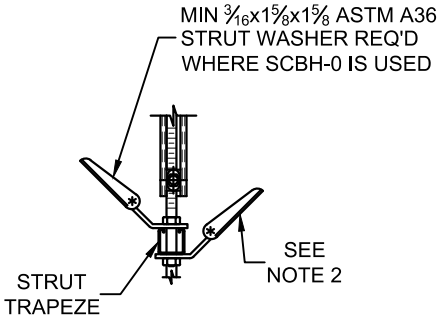

(LONGITUDINAL OR ALL-DIRECTIONAL BRACE)

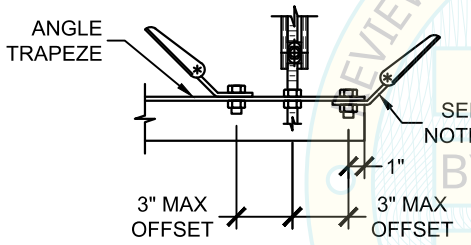

(TRANSVERSE, LONGITUDINAL OR ALL-DIRECTIONAL BRACE)

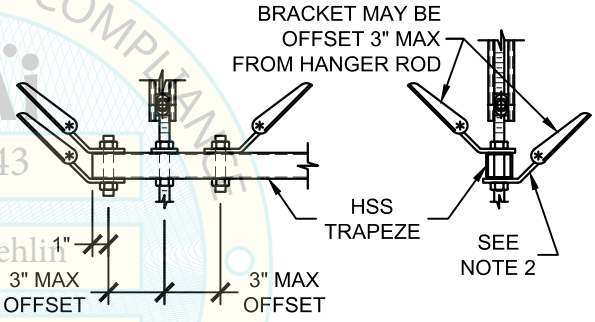

(TRANSVERSE, LONGITUDINAL OR ALL-DIRECTIONAL BRACE)

SEISMIC BRACE BRACKET OFFSET FROM HANGER RODS

REVIEWED FOR CODE COMPLIANCE
HCAi
OPM-0043
BY: William Staehlin
DATE: 01/23/2023
CALIFORNIA BUILDING CODE, 2022

NOTES:
1) REFER TO APPROPRIATE DETAIL F PAGES FOR DIMENSIONS AND NOTATIONS NOT SHOWN.
2) WHEN INSTALLING SHB TO BOTTOM OF TRAPEZE, MW-KY SHB KEY IS REQ'D (REF. X2.4).

MASON WEST
1601 E. Miraloma Ave. Placentia, CA 92870
TEL (714) 630 - 0701, www.masonwest.com

Jiefu "Jeff" Zhang, SE
California SE No. S5270

PAGE
A25.2

ATTACHMENT OPTIONS FOR CONDUITS ON TRAPEZE MEMBERS FOR TRANSVERSE, LONGITUDINAL, AND ALL-DIRECTIONAL BRACING SYSTEMS

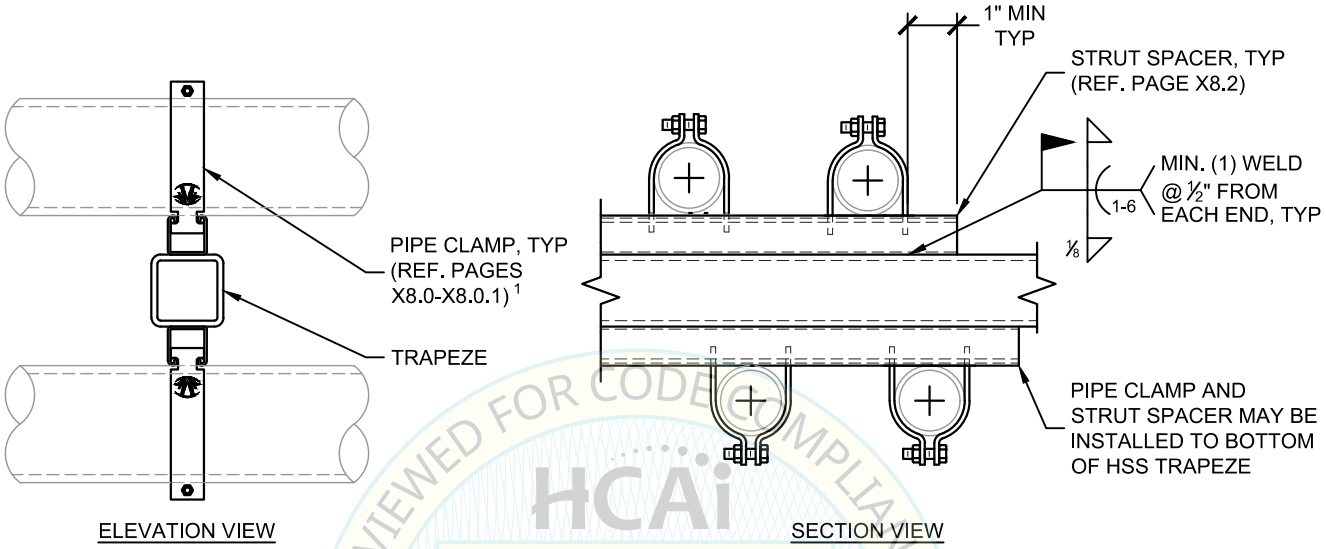

HCAi
OPM-0043
BY: William Staehlin
DATE: 01/23/2023
REVIEWED FOR CODE COMPLIANCE
CALIFORNIA BUILDING CODE, 2022

MASON WEST MW-SSC AND MW-SSCE PIPE CLAMPS

NOTES:

1) PIPE CLAMPS MAY BE USED FOR TRANSVERSE, LONGITUDINAL, OR ALL-DIRECTIONAL BRACING SYSTEMS. REF. APPROPRIATE X8 PAGE FOR MAX Fp FORCES.

MASON WEST
1601 E. Miraloma Ave. Placentia, CA 92870
TEL (714) 630 - 0701, www.masonwest.com

Jiefu "Jeff" Zhang, SE
California SE No. S5270

PAGE
A26.0

SEISMIC SOLID BRACING OFF STRUT HANGER TRANSVERSE OPTION FOR INDIVIDUALLY SUSPENDED CONDUIT

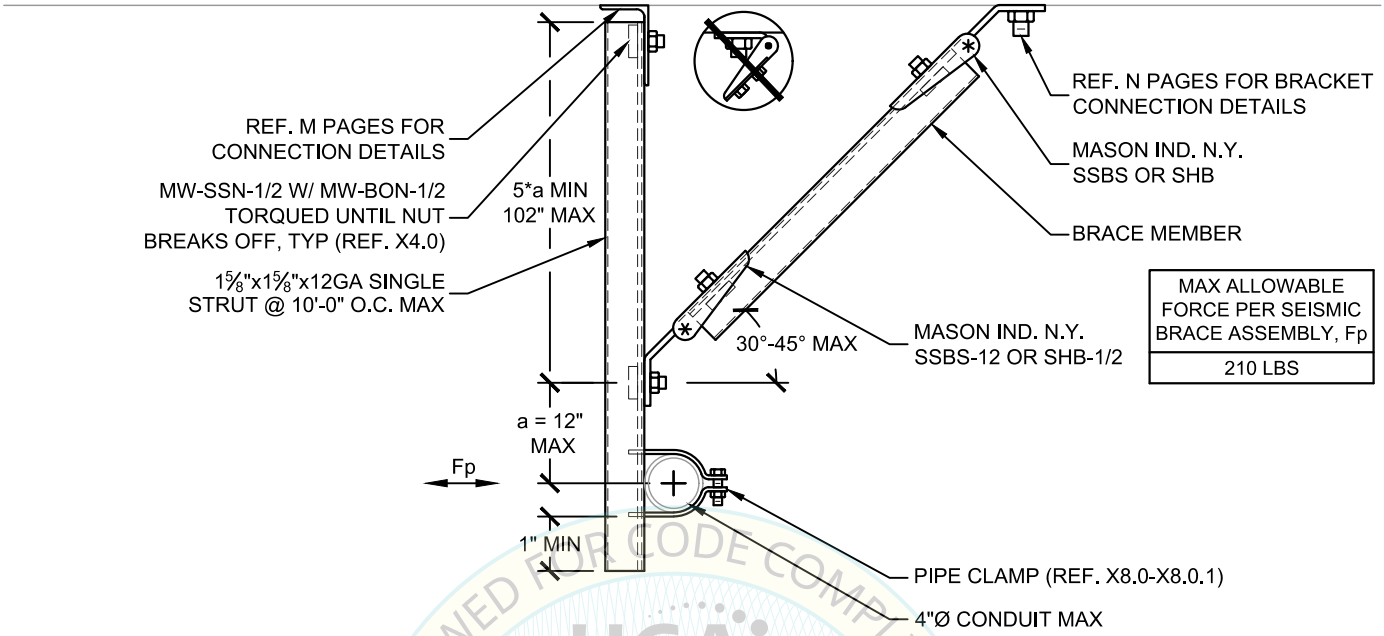

SINGLE STRUT OPTION

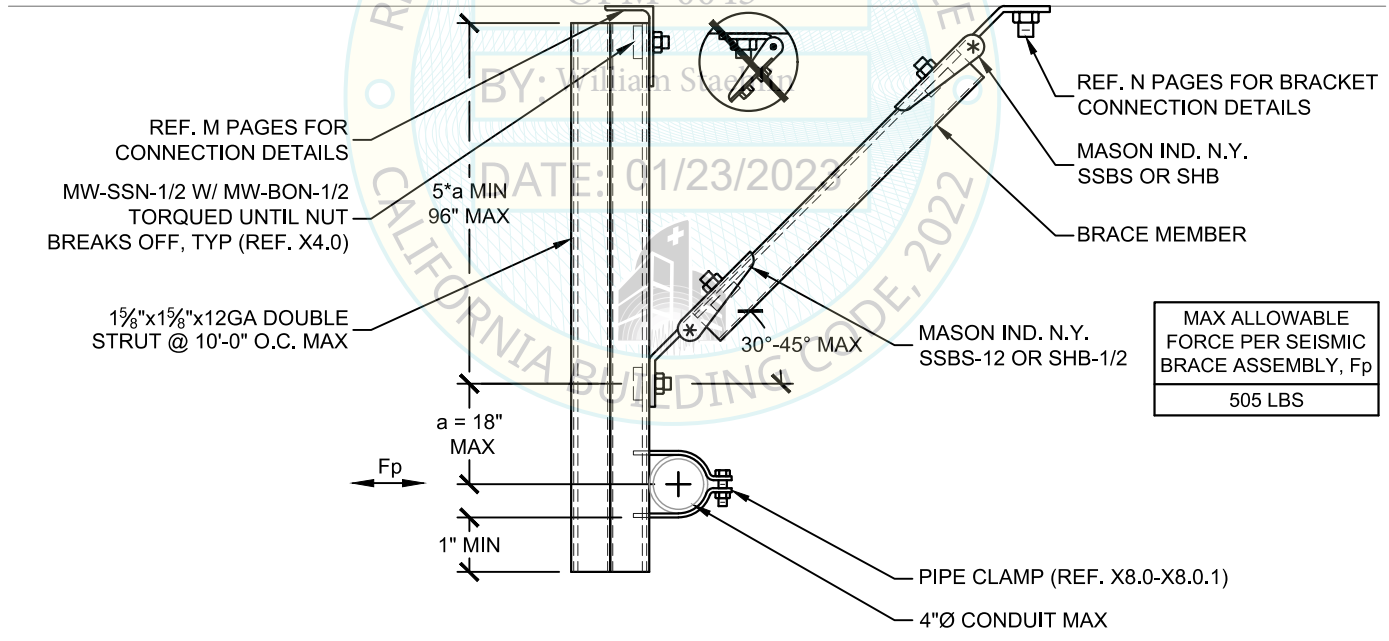

DOUBLE STRUT OPTION

HCAi
OPM-0043
BY: William Staehlin
DATE: 01/23/2023
REVIEWED FOR CODE COMPLIANCE
CALIFORNIA BUILDING CODE, 2022

NOTES:
1) REFER TO APPROPRIATE C PAGES FOR DIMENSIONS AND ANNOTATIONS NOT SHOWN.

MASON WEST
1601 E. Miraloma Ave. Placentia, CA 92870
TEL (714) 630 - 0701, www.masonwest.com

Jiefu "Jeff" Zhang, SE
California SE No. S5270

PAGE
A27.0

SEISMIC SOLID BRACING OFF STRUT HANGER LONGITUDINAL OPTION FOR INDIVIDUALLY SUSPENDED CONDUIT

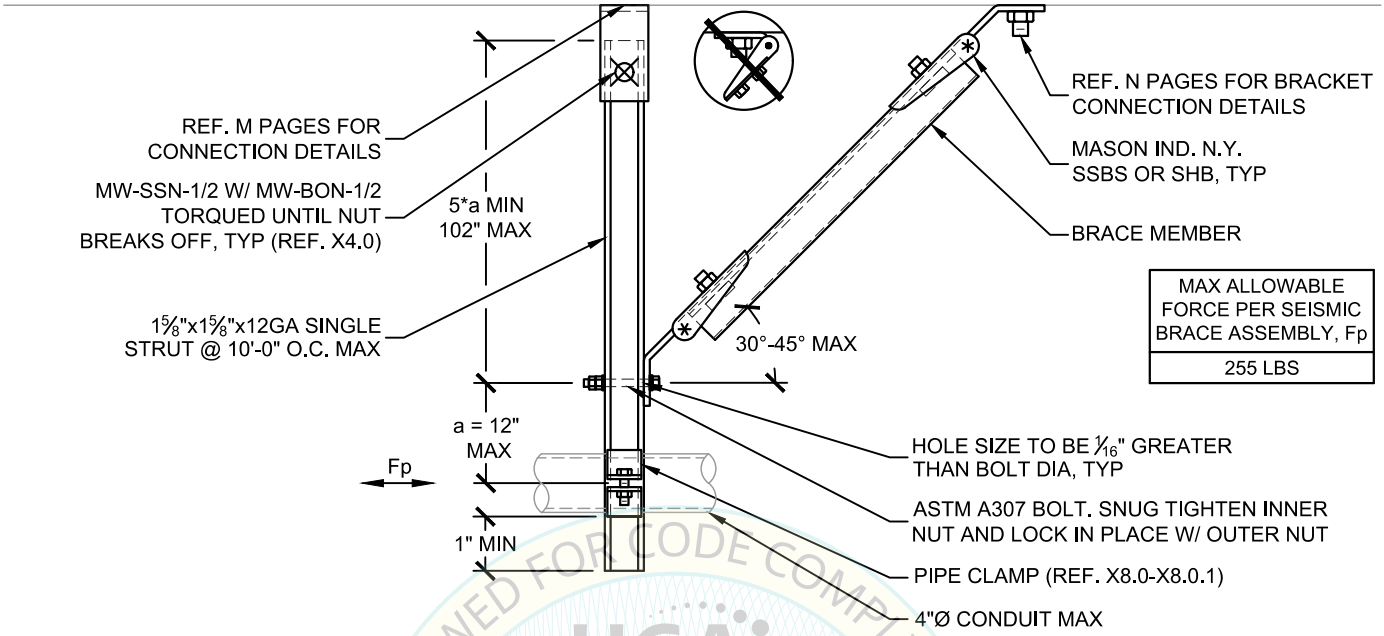

SINGLE STRUT OPTION

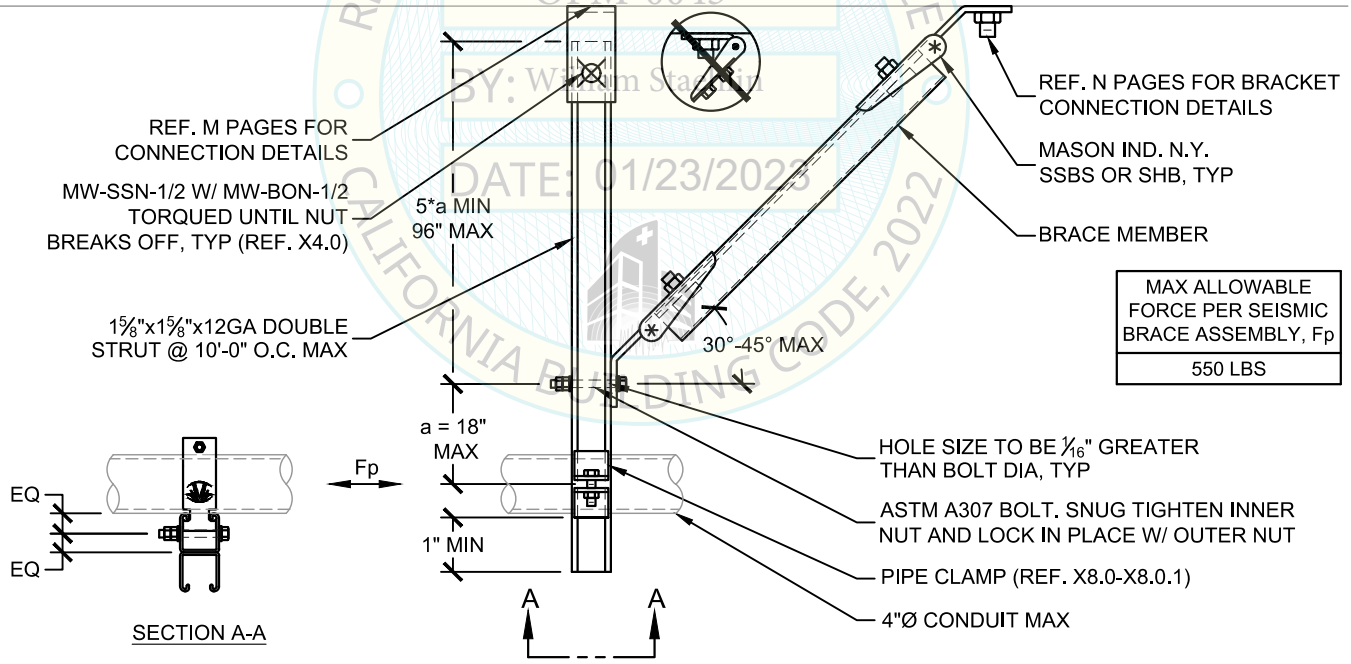

SECTION A-A

DOUBLE STRUT OPTION

HCAi OPM-0043 BY: William Staehlin DATE: 01/23/2023 REVIEWED FOR CODE COMPLIANCE CALIFORNIA BUILDING CODE, 2022

NOTES:
1) REFER TO APPROPRIATE C PAGES FOR DIMENSIONS AND ANNOTATIONS NOT SHOWN.

MASON WEST
1601 E. Miraloma Ave. Placentia, CA 92870
TEL (714) 630 - 0701, www.masonwest.com

Jiefu "Jeff" Zhang, SE
California SE No. S5270

PAGE
A27.1

SEISMIC CABLE BRACING OFF STRUT HANGER TRANVSERSE OPTION FOR INDIVIDUALLY SUSPENDED CONDUIT

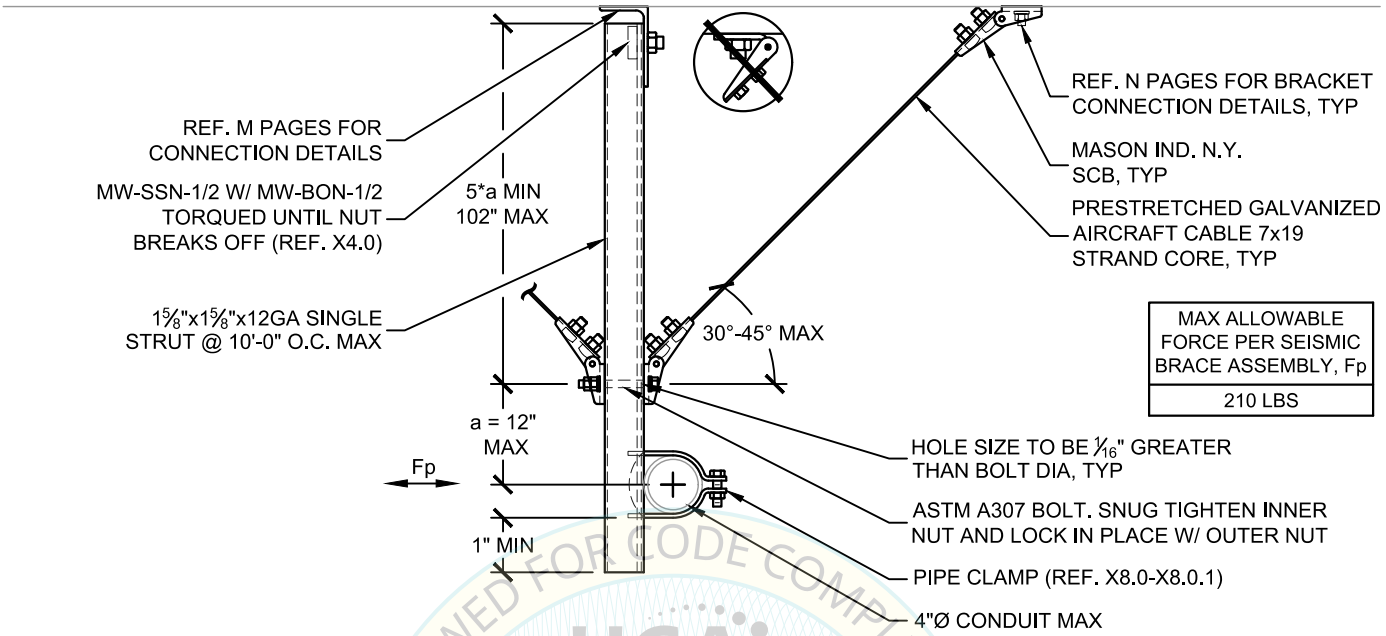

MAX ALLOWABLE FORCE PER SEISMIC BRACE ASSEMBLY, Fp
210 LBS

SINGLE STRUT OPTION

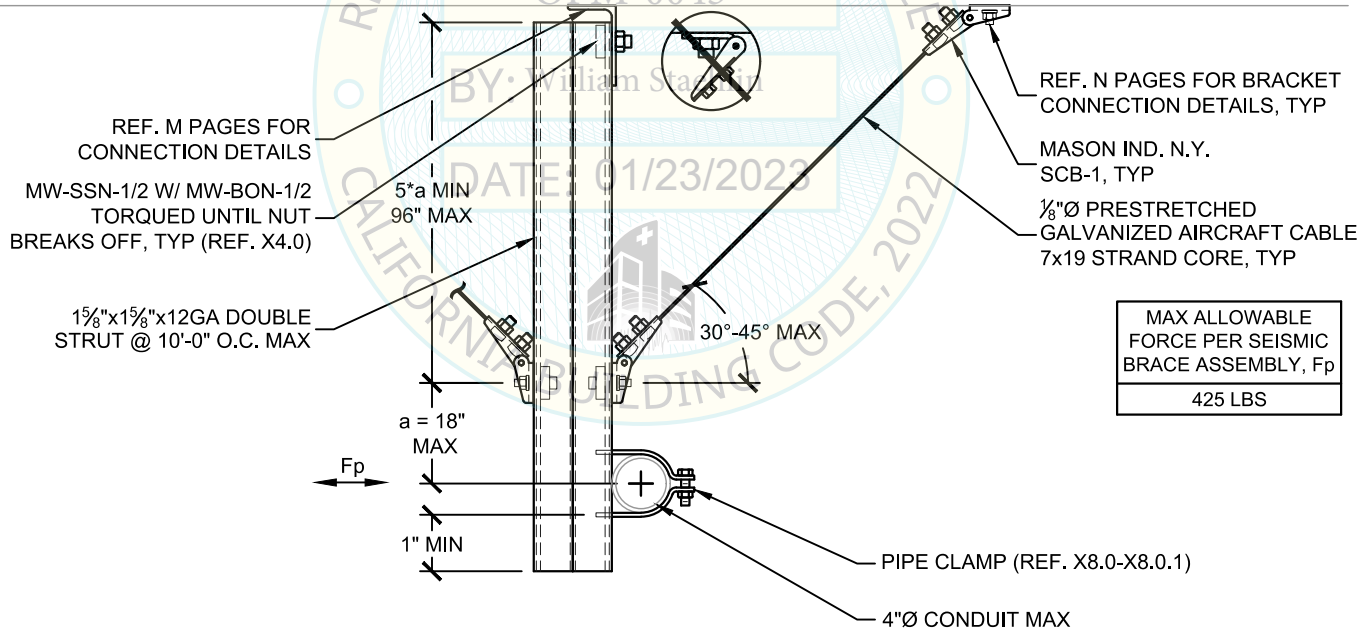

MAX ALLOWABLE FORCE PER SEISMIC BRACE ASSEMBLY, Fp
425 LBS

DOUBLE STRUT OPTION

REVIEWED FOR CODE COMPLIANCE
HCAi
OPM-0043
BY: William Staehlin
DATE: 01/23/2023
CALIFORNIA BUILDING CODE, 2022

NOTES:
1) REFER TO APPROPRIATE C PAGES FOR DIMENSIONS AND ANNOTATIONS NOT SHOWN.

MASON WEST
1601 E. Miraloma Ave. Placentia, CA 92870
TEL (714) 630 - 0701, www.masonwest.com

Jiefu "Jeff" Zhang, SE
California SE No. S5270

PAGE
A27.2

SEISMIC CABLE BRACING OFF STRUT HANGER LONGITUDINAL OPTION FOR INDIVIDUALLY SUSPENDED CONDUIT

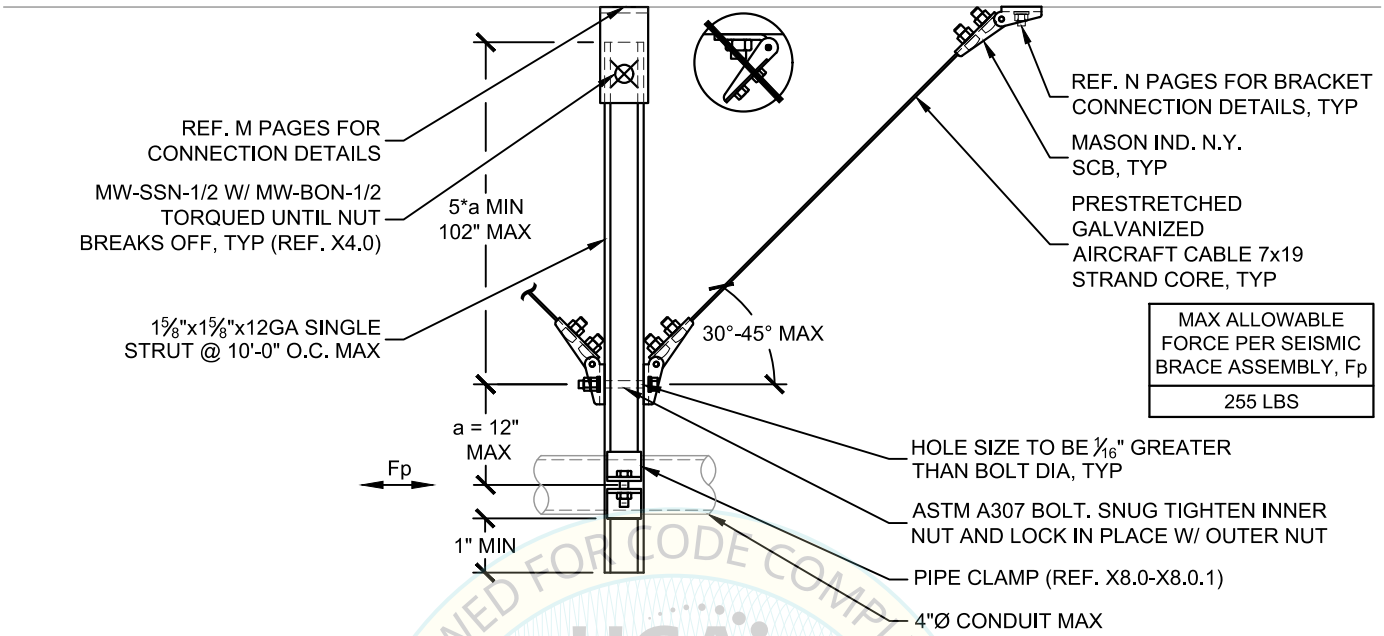

SINGLE STRUT OPTION

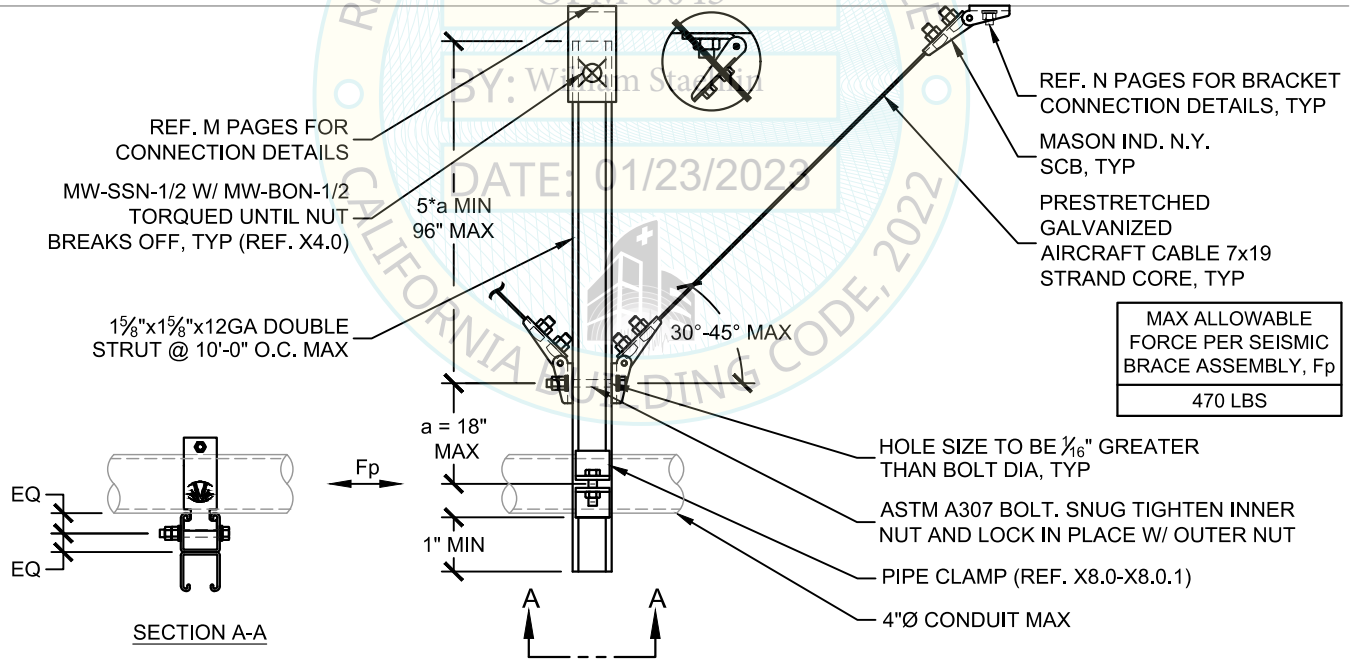

DOUBLE STRUT OPTION

HCAi
OPM-0043
BY: William Staehlin
DATE: 01/23/2023
REVIEWED FOR CODE COMPLIANCE
CALIFORNIA BUILDING CODE, 2022

NOTES:
1) REFER TO APPROPRIATE C PAGES FOR DIMENSIONS AND ANNOTATIONS NOT SHOWN.

MASON WEST
1601 E. Miraloma Ave. Placentia, CA 92870
TEL (714) 630 - 0701, www.masonwest.com

Jiefu "Jeff" Zhang, SE
California SE No. S5270

PAGE
A27.3

SEISMIC SOLID BRACING OFF STRUT HANGER TRANSVERSE OPTION FOR SUSPENDED CONDUITS ON TRAPEZE

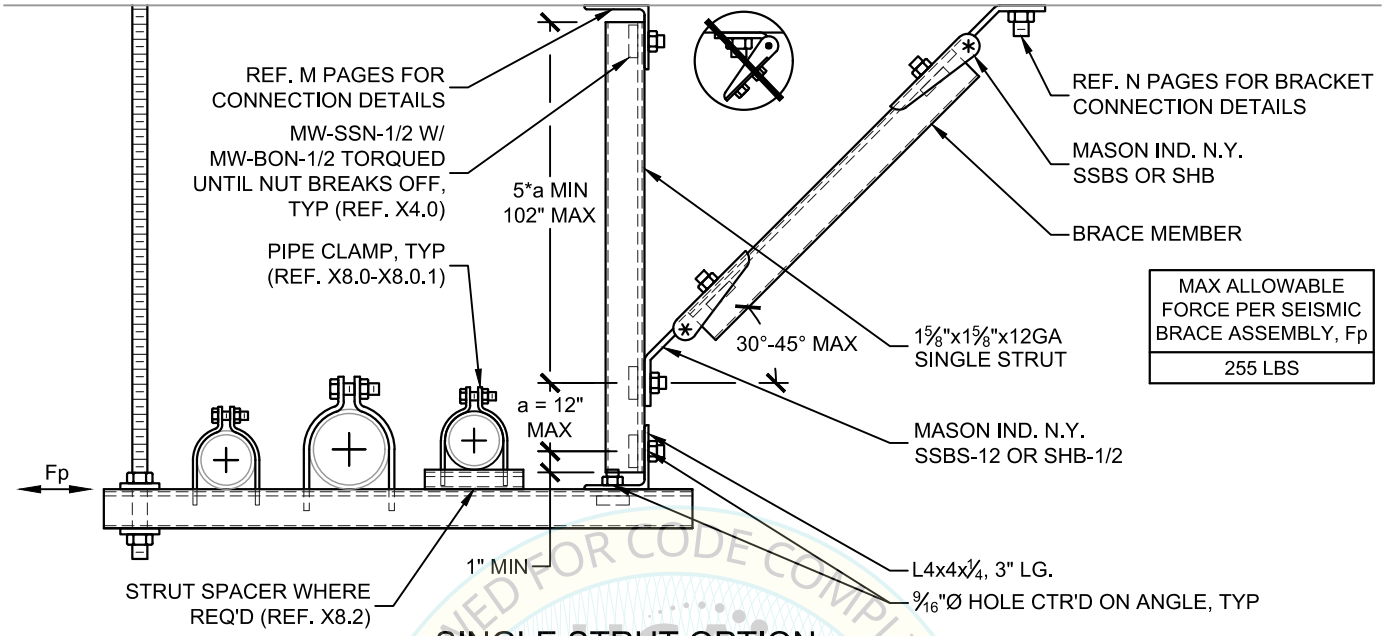

SINGLE STRUT OPTION

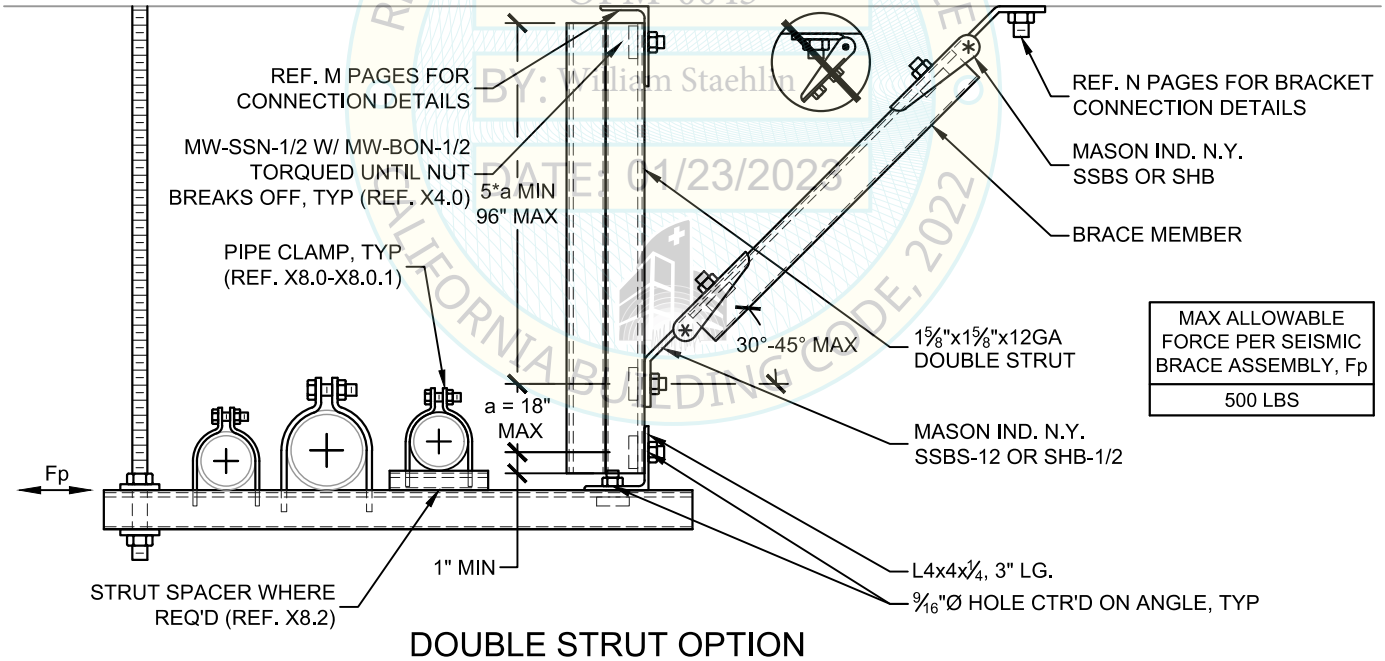

DOUBLE STRUT OPTION

ICAI
OPM-0043
BY: William Staehlin
DATE: 01/23/2023
REVIEWED FOR CODE COMPLIANCE
CALIFORNIA BUILDING CODE, 2022

NOTES:
1) REFER TO APPROPRIATE F PAGES FOR DIMENSIONS AND ANNOTATIONS NOT SHOWN.
2) SINGLE STRUT AND DOUBLE STRUT OPTIONS MAY CARRY UP TO A MAXIMUM OF 30LBS/FT OR 60LBS/FT, RESPECTIVELY.

MASON WEST
1601 E. Miraloma Ave. Placentia, CA 92870
TEL (714) 630 - 0701, www.masonwest.com

Jiefu "Jeff" Zhang, SE
California SE No. S5270

PAGE
A27.4

SEISMIC SOLID BRACING OFF STRUT HANGER LONGITUDINAL OPTION FOR SUSPENDED CONDUITS ON TRAPEZE

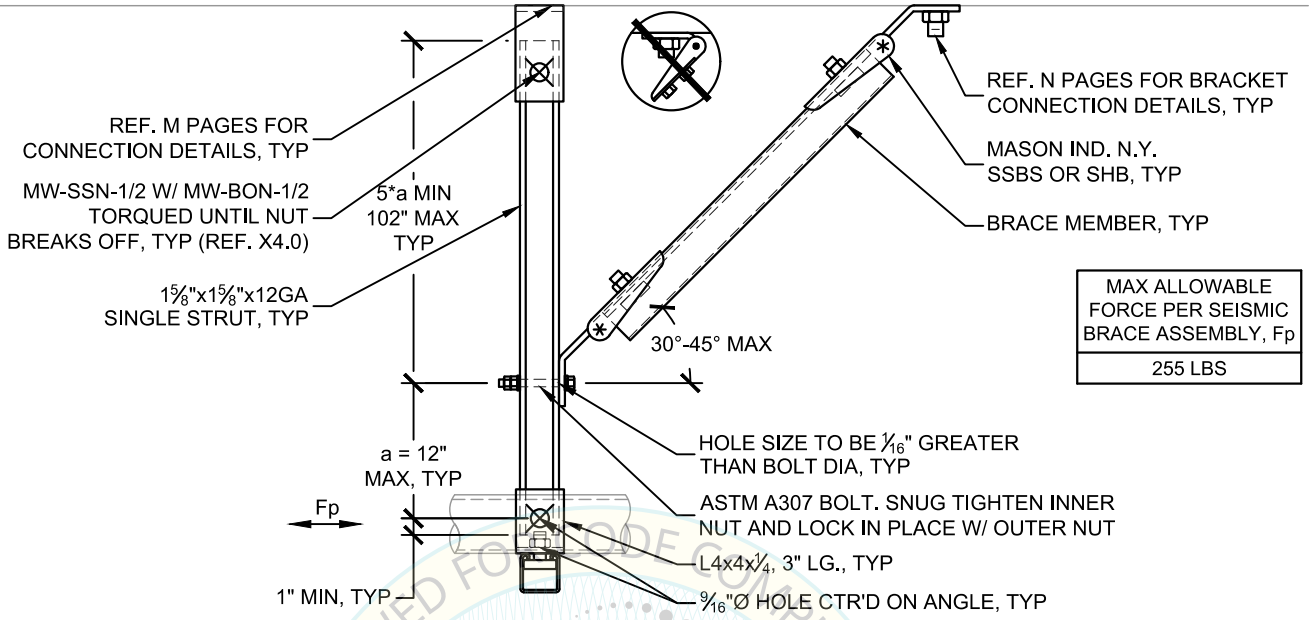

SINGLE STRUT OPTION

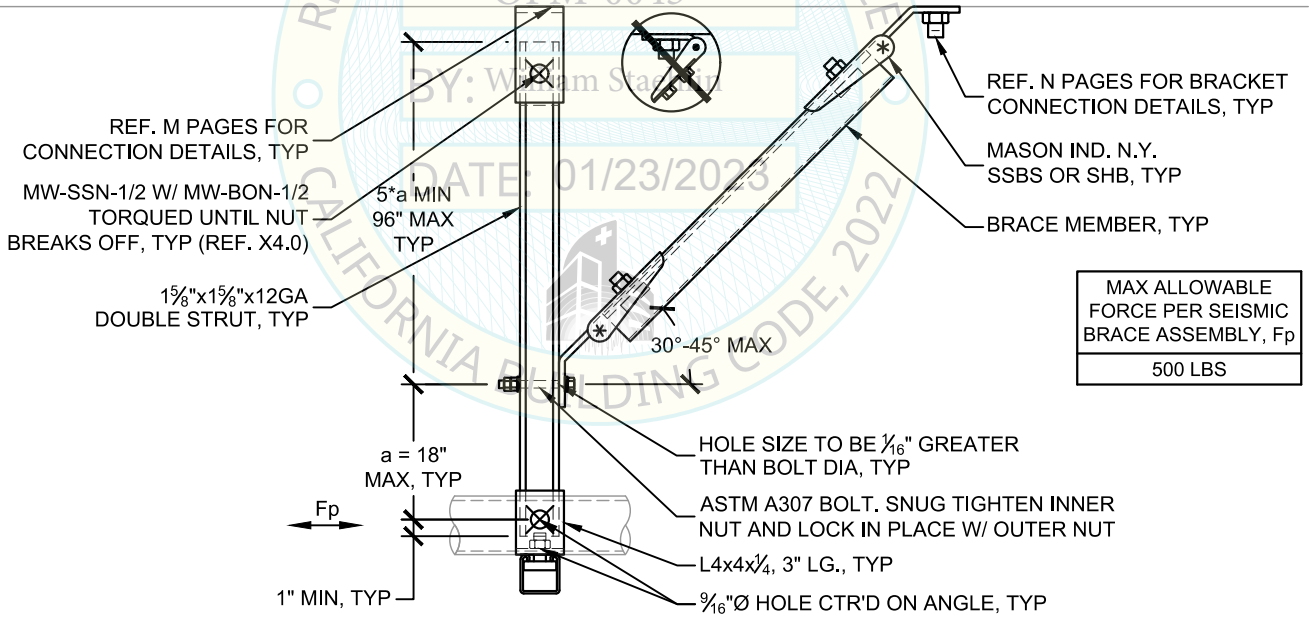

DOUBLE STRUT OPTION

HCAi
OPM-0043
BY: William Staehlin
DATE: 01/23/2023
REVIEWED FOR CODE COMPLIANCE
CALIFORNIA BUILDING CODE, 2022

NOTES:
1) REFER TO APPROPRIATE F PAGES FOR DIMENSIONS AND ANNOTATIONS NOT SHOWN.
2) SINGLE STRUT AND DOUBLE STRUT OPTIONS MAY CARRY UP TO A MAXIMUM OF 30LBS/FT OR 60LBS/FT, RESPECTIVELY.

MASON WEST
1601 E. Miraloma Ave. Placentia, CA 92870
TEL (714) 630 - 0701, www.masonwest.com

Jiefu "Jeff" Zhang, SE
California SE No. S5270

PAGE
A27.5

SEISMIC CABLE BRACING OFF STRUT HANGER TRANSVERSE OPTION FOR SUSPENDED CONDUITS ON TRAPEZE

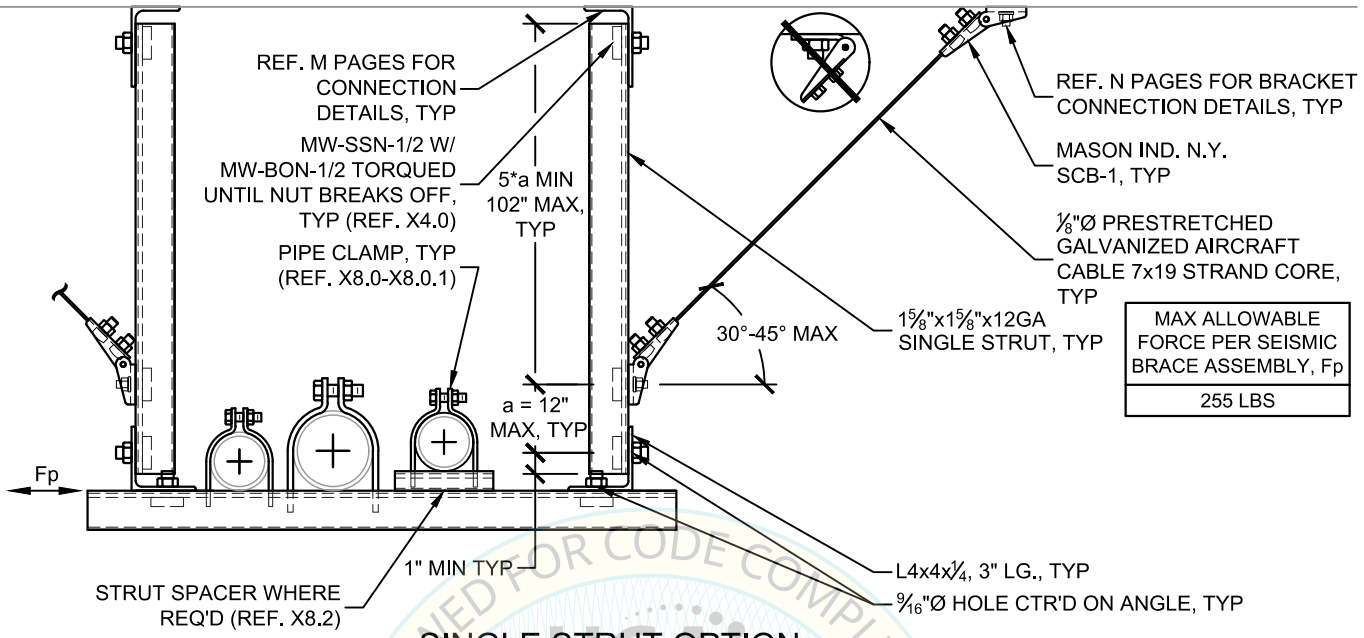

SINGLE STRUT OPTION

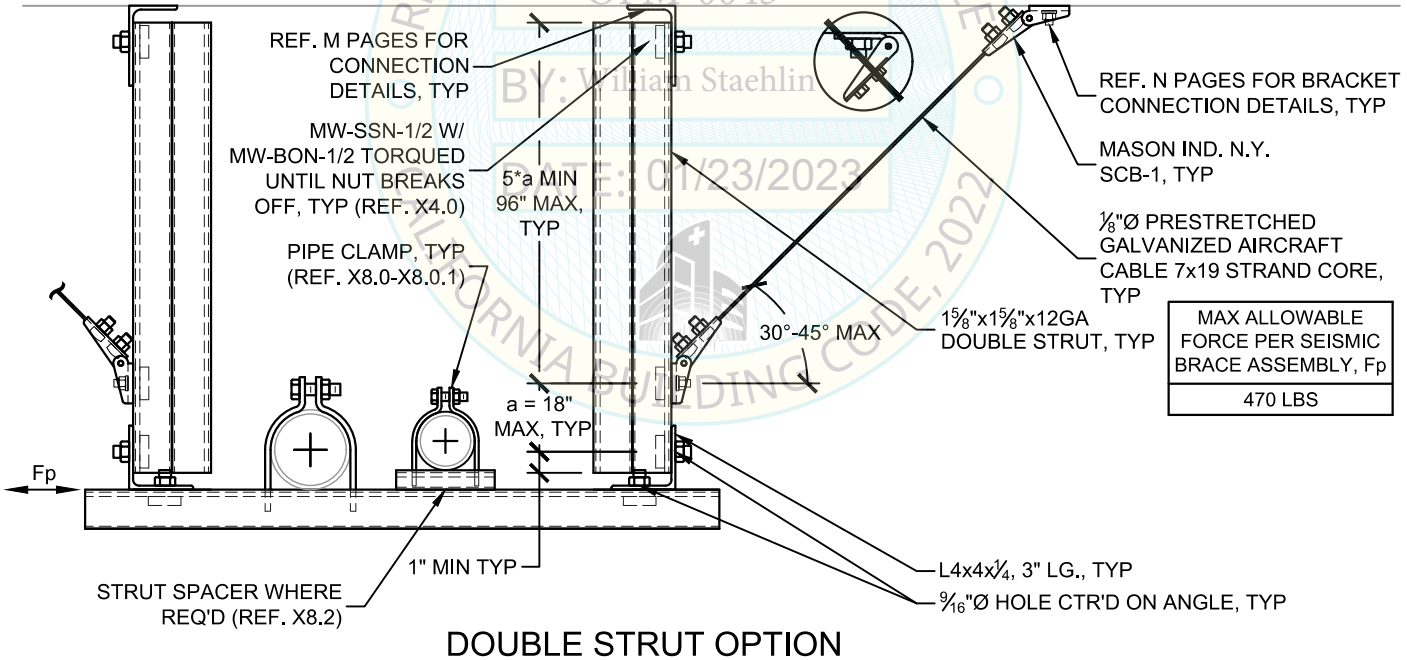

DOUBLE STRUT OPTION

REVIEWED FOR CODE COMPLIANCE
HCAI
OPM-0043
BY: William Staehlin
DATE: 01/23/2023
CALIFORNIA BUILDING CODE, 2022

NOTES:
1) REFER TO APPROPRIATE F PAGES FOR DIMENSIONS AND ANNOTATIONS NOT SHOWN.
2) SINGLE STRUT AND DOUBLE STRUT OPTIONS MAY CARRY UP TO A MAXIMUM OF 30LBS/FT OR 60LBS/FT, RESPECTIVELY.
3) REF. A27.6.1 FOR ALTERNATE INSTALLATION OPTIONS.

MASON WEST
1601 E. Miraloma Ave. Placentia, CA 92870
TEL (714) 630 - 0701, www.masonwest.com

Jiefu "Jeff" Zhang, SE
California SE No. S5270

PAGE
A27.6

SEISMIC CABLE BRACING OFF STRUT HANGER TRANSVERSE OPTION FOR SUSPENDED CONDUITS ON TRAPEZE

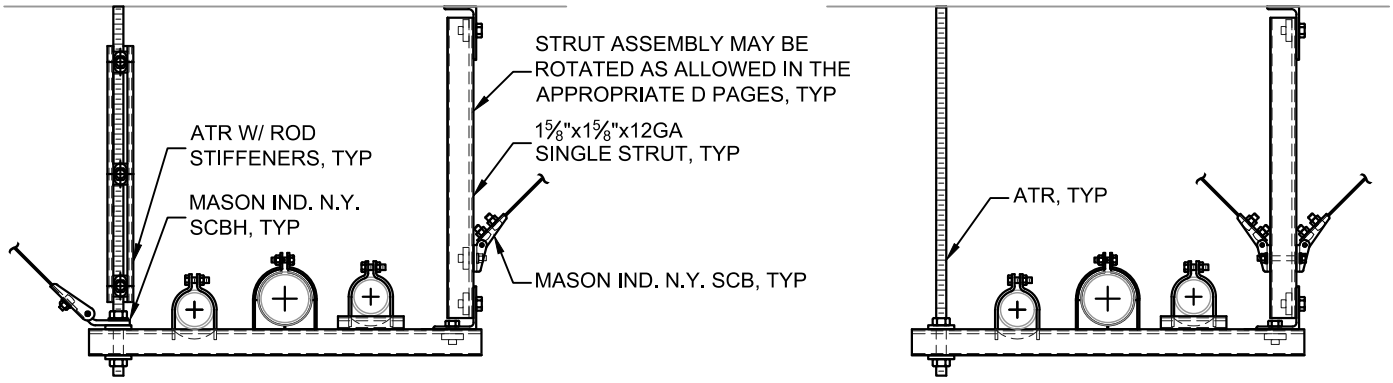

ALTERNATE INSTALLATION FOR SINGLE STRUT OPTION

REVIEWED FOR CODE COMPLIANCE
HCAi
OPM-0043
BY: William Staehlin
DATE: 1/23/2023
CALIFORNIA BUILDING CODE, 2022

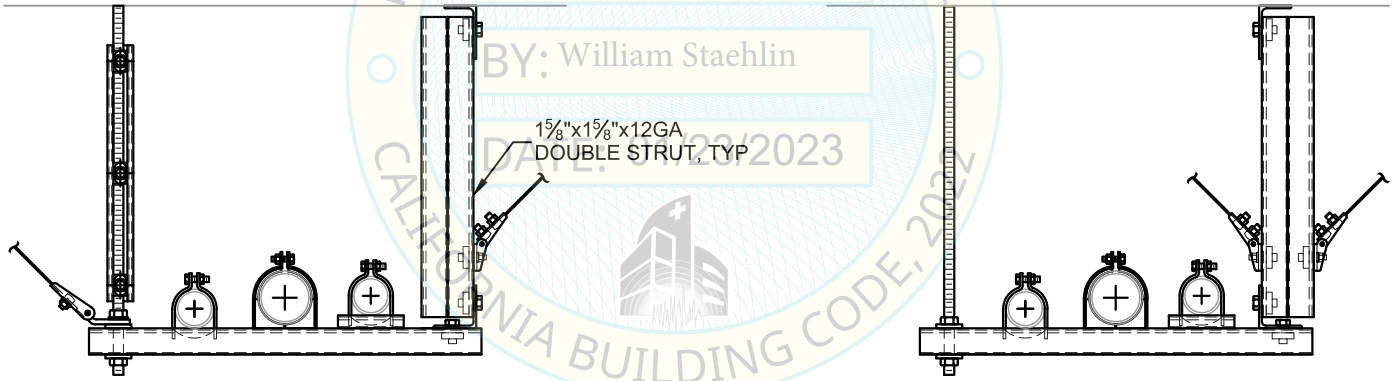

ALTERNATE INSTALLATION FOR DOUBLE STRUT OPTION

NOTES:
1) REFER TO A27.6 AND APPROPRIATE F PAGES FOR DIMENSIONS AND ANNOTATIONS NOT SHOWN.

MASON WEST
1601 E. Miraloma Ave. Placentia, CA 92870
TEL (714) 630 - 0701, www.masonwest.com

Jiefu "Jeff" Zhang, SE
California SE No. S5270

PAGE
A27.6.1

SEISMIC CABLE BRACING OFF STRUT HANGER LONGITUDINAL OPTION FOR SUSPENDED CONDUITS ON TRAPEZE

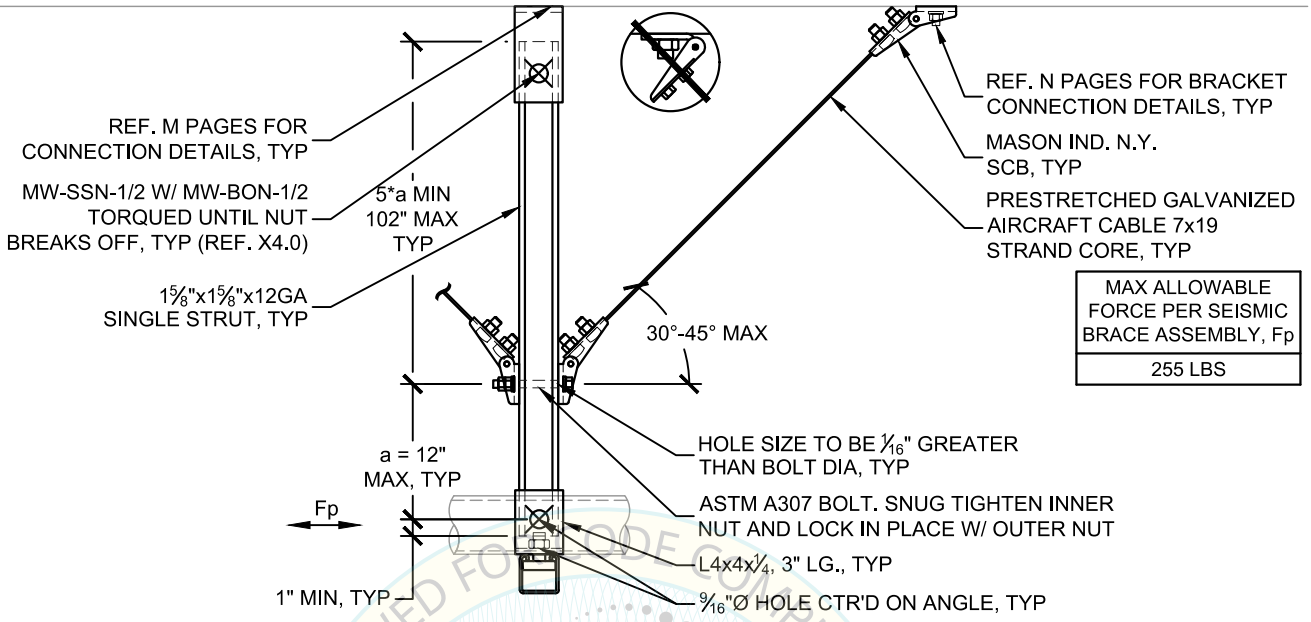

SINGLE STRUT OPTION

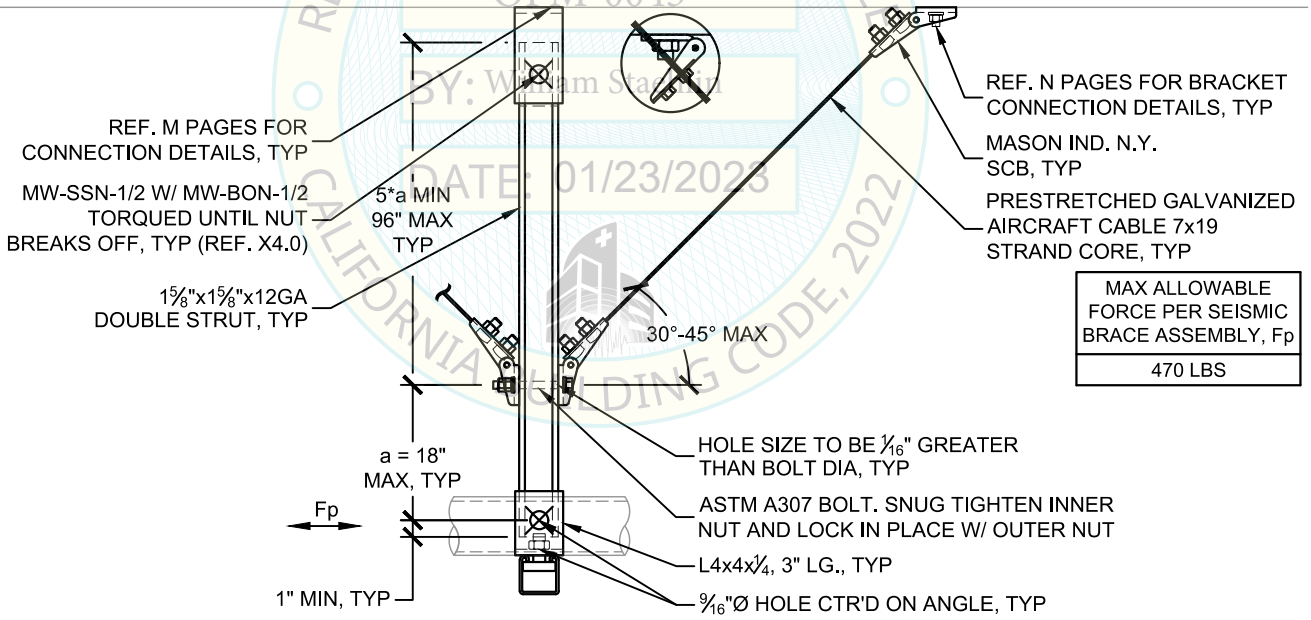

DOUBLE STRUT OPTION

REVIEWED FOR CODE COMPLIANCE
HCAi
OPM-0043
BY: William Staehlin
DATE: 01/23/2023
CALIFORNIA BUILDING CODE, 2022

NOTES:
1) REFER TO APPROPRIATE F PAGES FOR DIMENSIONS AND ANNOTATIONS NOT SHOWN.
2) SINGLE STRUT AND DOUBLE STRUT OPTIONS MAY CARRY UP TO A MAXIMUM OF 30LBS/FT OR 60LBS/FT, RESPECTIVELY.

MASON WEST
1601 E. Miraloma Ave. Placentia, CA 92870
TEL (714) 630 - 0701, www.masonwest.com

Jiefu "Jeff" Zhang, SE
California SE No. S5270

PAGE
A27.7

SEISMIC SOLID BRACING OFF STRUT HANGER TRANSVERSE OPTION FOR SUSPENDED RACEWAYS ON TRAPEZE

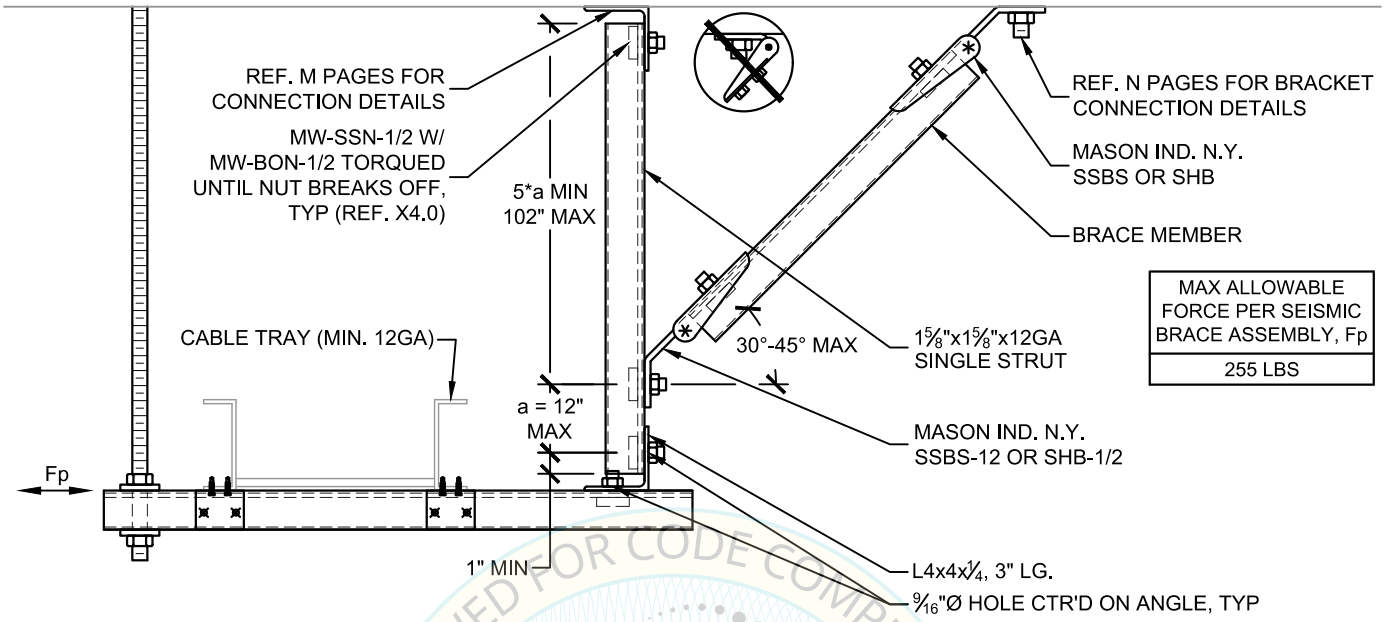

SINGLE STRUT OPTION

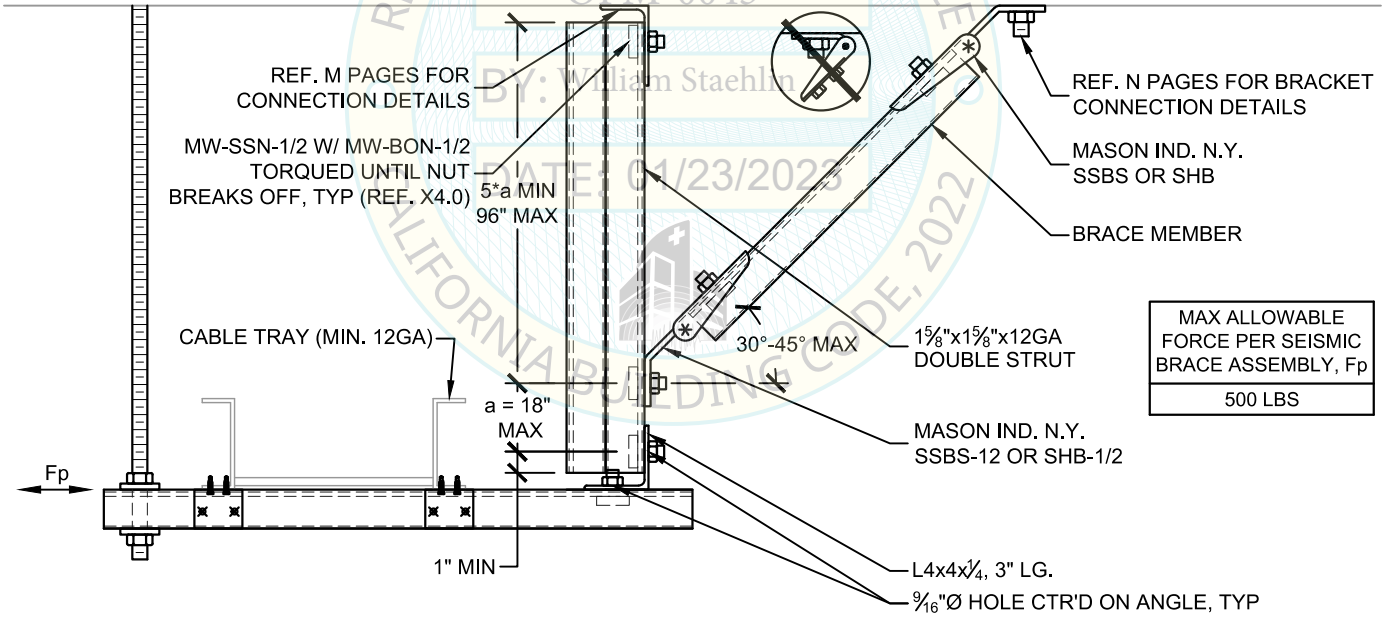

DOUBLE STRUT OPTION

NOTES:

1) REFER TO APPROPRIATE E PAGES FOR DIMENSIONS AND ANNOTATIONS NOT SHOWN.
2) SINGLE STRUT AND DOUBLE STRUT OPTIONS MAY CARRY UP TO A MAXIMUM OF 30LBS/FT OR 60LBS/FT, RESPECTIVELY.
3) CABLE TRAY SHALL BE APPROVED ON A PROJECT SPECIFIC BASIS OR PREAPPROVED BY OSHPD. SPACING LIMITS SET BY THE MANUFACTURER SHALL NOT BE EXCEEDED. CABLE TRAY BRACE SPACING SHALL BE APPROVED OR PREAPPROVED BY OSHPD.

REVIEWED FOR CODE COMPLIANCE
OPM-0043
BY: William Staehlin
DATE: 01/23/2023
CALIFORNIA BUILDING CODE, 2022

MASON WEST
1601 E. Miraloma Ave. Placentia, CA 92870
TEL (714) 630 - 0701, www.masonwest.com

Jiefu "Jeff" Zhang, SE
California SE No. S5270

PAGE
A27.8

SEISMIC SOLID BRACING OFF STRUT HANGER LONGITUDINAL OPTION FOR SUSPENDED RACEWAYS ON TRAPEZE

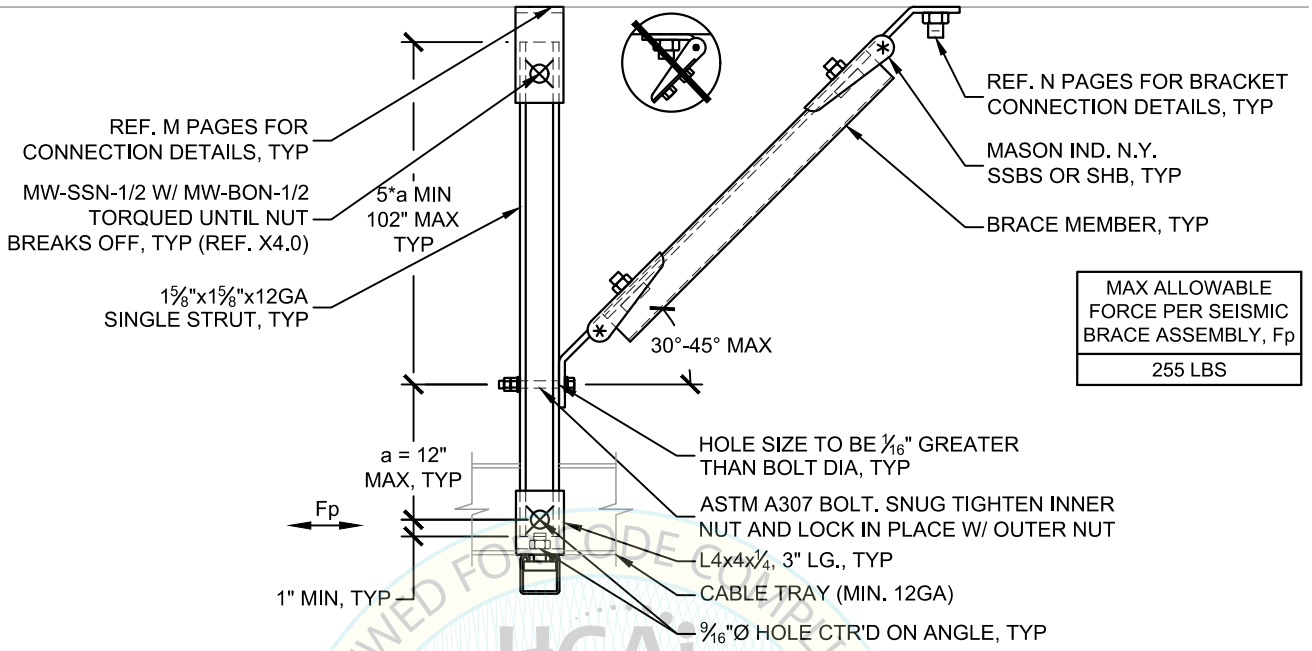

MAX ALLOWABLE FORCE PER SEISMIC BRACE ASSEMBLY, Fp
255 LBS

SINGLE STRUT OPTION

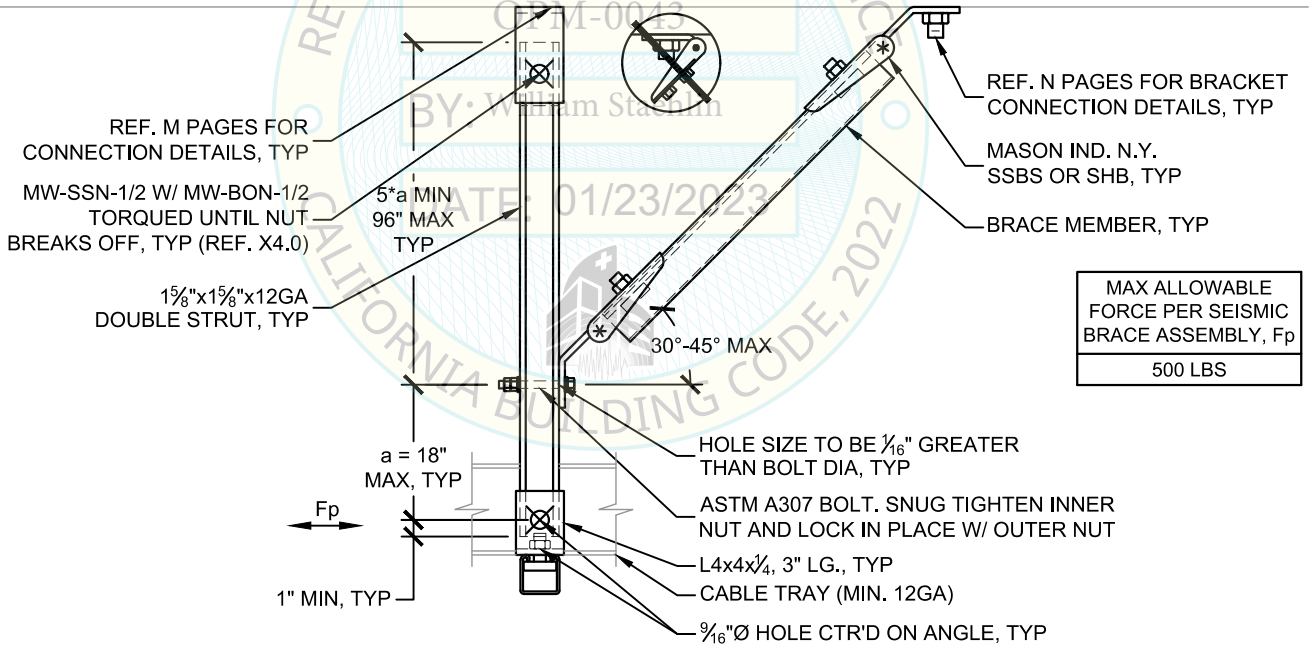

MAX ALLOWABLE FORCE PER SEISMIC BRACE ASSEMBLY, Fp
500 LBS

DOUBLE STRUT OPTION

NOTES:

1) REFER TO APPROPRIATE E PAGES FOR DIMENSIONS AND ANNOTATIONS NOT SHOWN.
2) SINGLE STRUT AND DOUBLE STRUT OPTIONS MAY CARRY UP TO A MAXIMUM OF 30LBS/FT OR 60LBS/FT, RESPECTIVELY.
3) CABLE TRAY SHALL BE APPROVED ON A PROJECT SPECIFIC BASIS OR PREAPPROVED BY OSHPD. SPACING LIMITS SET BY THE MANUFACTURER SHALL NOT BE EXCEEDED. CABLE TRAY BRACE SPACING SHALL BE APPROVED OR PREAPPROVED BY OSHPD.

MASON WEST
1601 E. Miraloma Ave. Placentia, CA 92870
TEL (714) 630 - 0701, www.masonwest.com

Jiefu "Jeff" Zhang, SE
California SE No. S5270

PAGE
A27.9

REVIEWED FOR CODE COMPLIANCE
CALIFORNIA BUILDING CODE, 2022
HCAi
OPM-0043
BY: William Staehlin
DATE: 01/23/2023

SEISMIC CABLE BRACING OFF STRUT HANGER TRANSVERSE OPTION FOR SUSPENDED RACEWAYS ON TRAPEZE

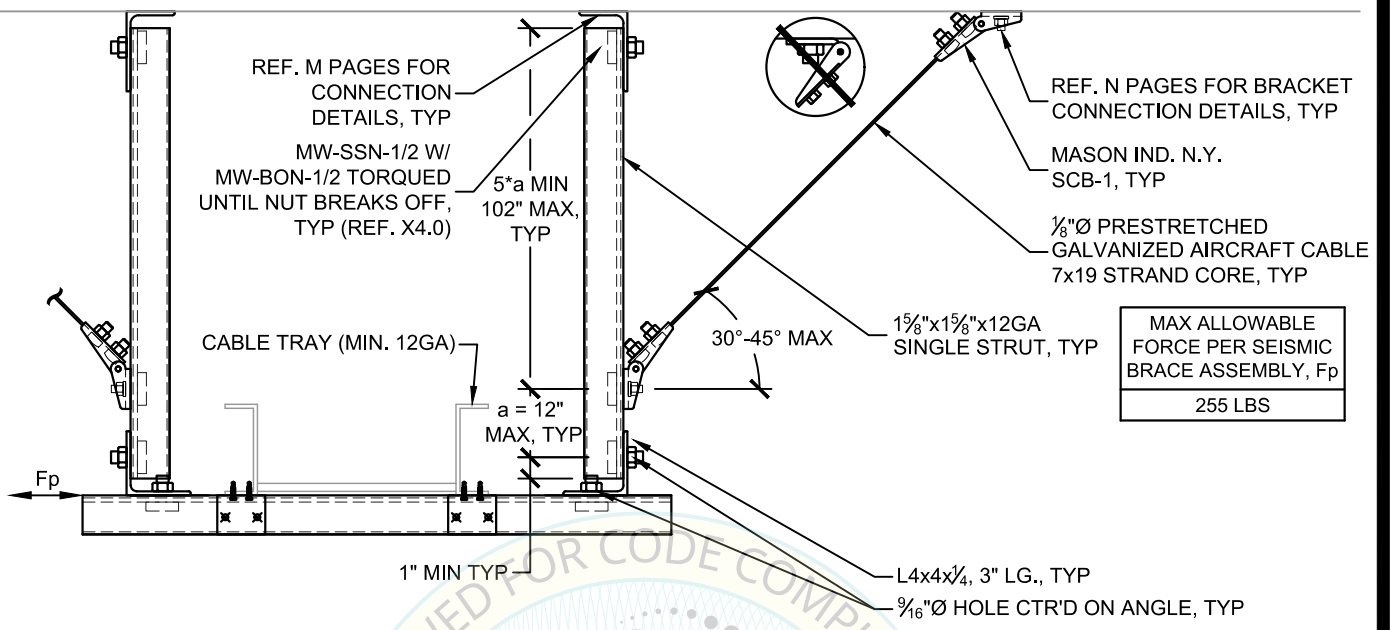

SINGLE STRUT OPTION

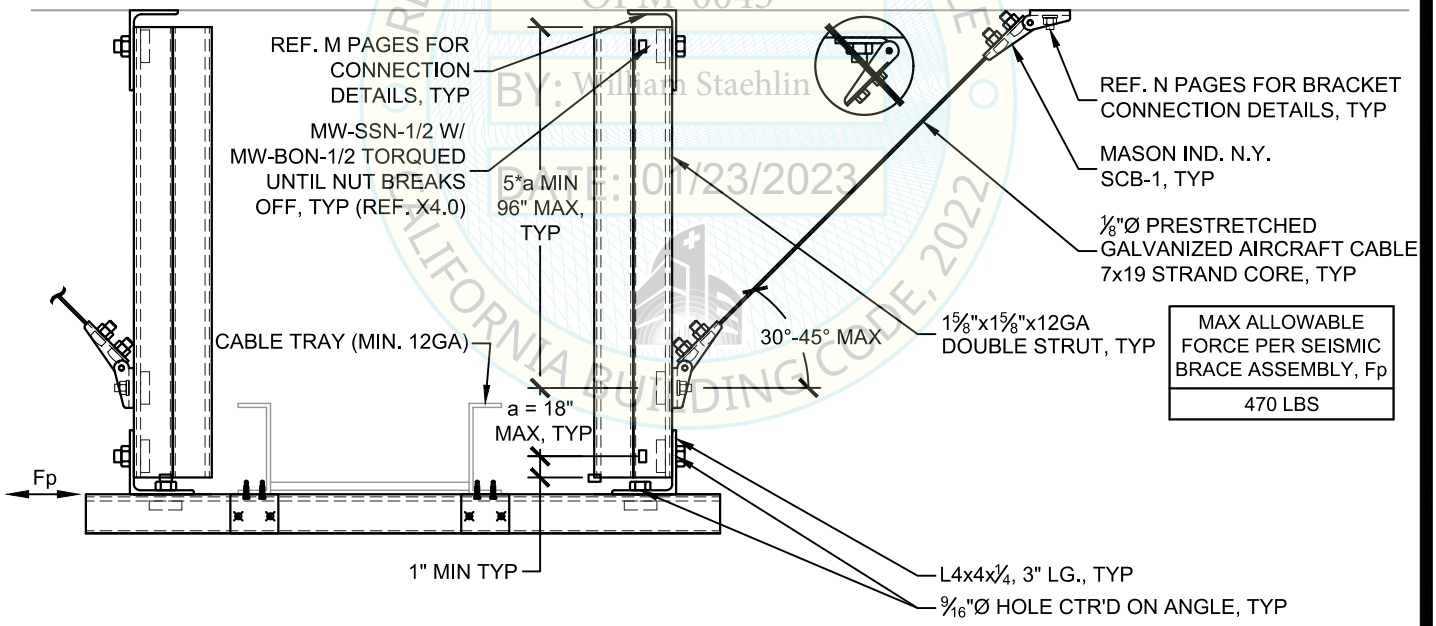

DOUBLE STRUT OPTION

REVIEWED FOR CODE COMPLIANCE
CALIFORNIA BUILDING CODE, 2022
ICC-ES
OPM-0043
BY: William Staehlin
DATE: 01/23/2023

NOTES:

1) REFER TO APPROPRIATE E PAGES FOR DIMENSIONS AND ANNOTATIONS NOT SHOWN.
2) SINGLE STRUT AND DOUBLE STRUT OPTIONS MAY CARRY UP TO A MAXIMUM OF 30LBS/FT OR 60LBS/FT, RESPECTIVELY.
3) CABLE TRAY SHALL BE APPROVED ON A PROJECT SPECIFIC BASIS OR PREAPPROVED BY OSHPD. SPACING LIMITS SET BY THE MANUFACTURER SHALL NOT BE EXCEEDED. CABLE TRAY BRACE SPACING SHALL BE APPROVED OR PREAPPROVED BY OSHPD.

MASON WEST
1601 E. Miraloma Ave. Placentia, CA 92870
TEL (714) 630 - 0701, www.masonwest.com

Jiefu "Jeff" Zhang, SE
California SE No. S5270

PAGE
A27.10

SEISMIC CABLE BRACING OFF STRUT HANGER TRANSVERSE OPTION FOR SUSPENDED RACEWAYS ON TRAPEZE

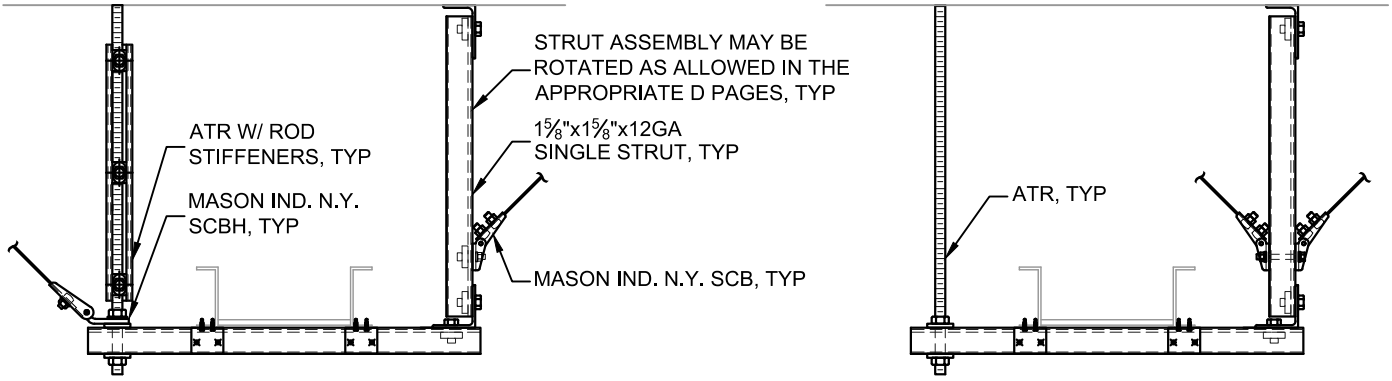

ALTERNATE INSTALLATION FOR SINGLE STRUT OPTION

REVIEWED FOR CODE COMPLIANCE
HCAi
OPM-0043
BY: William Staehlin
DATE: 1/23/2023
CALIFORNIA BUILDING CODE, 2022

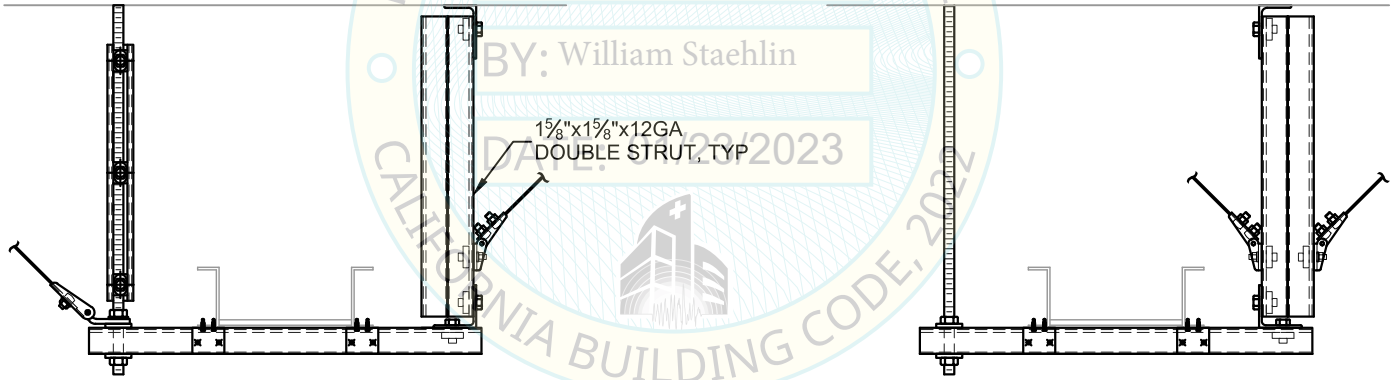

ALTERNATE INSTALLATION FOR DOUBLE STRUT OPTION

NOTES:
1) REFER TO A27.10 AND APPROPRIATE E PAGES FOR DIMENSIONS AND ANNOTATIONS NOT SHOWN.

MASON WEST
1601 E. Miraloma Ave. Placentia, CA 92870
TEL (714) 630 - 0701, www.masonwest.com

Jiefu "Jeff" Zhang, SE
California SE No. S5270

PAGE
A27.10.1

SEISMIC CABLE BRACING OFF STRUT HANGER LONGITUDINAL OPTION FOR SUSPENDED RACEWAYS ON TRAPEZE

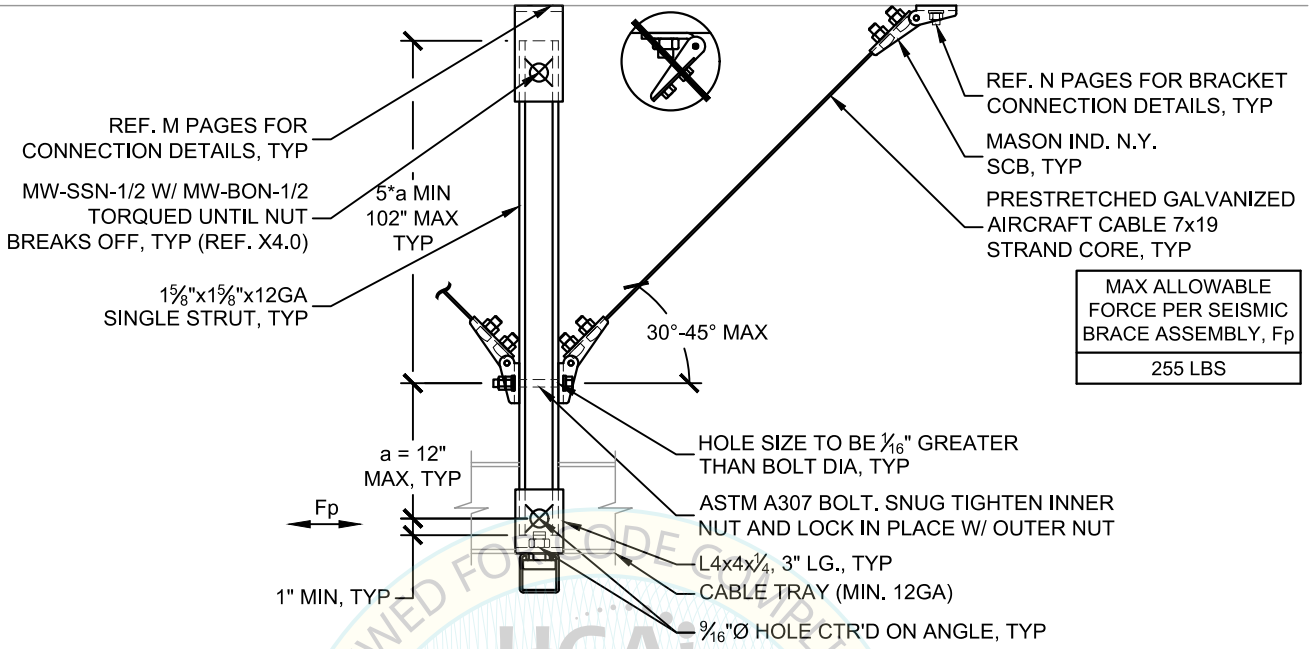

SINGLE STRUT OPTION

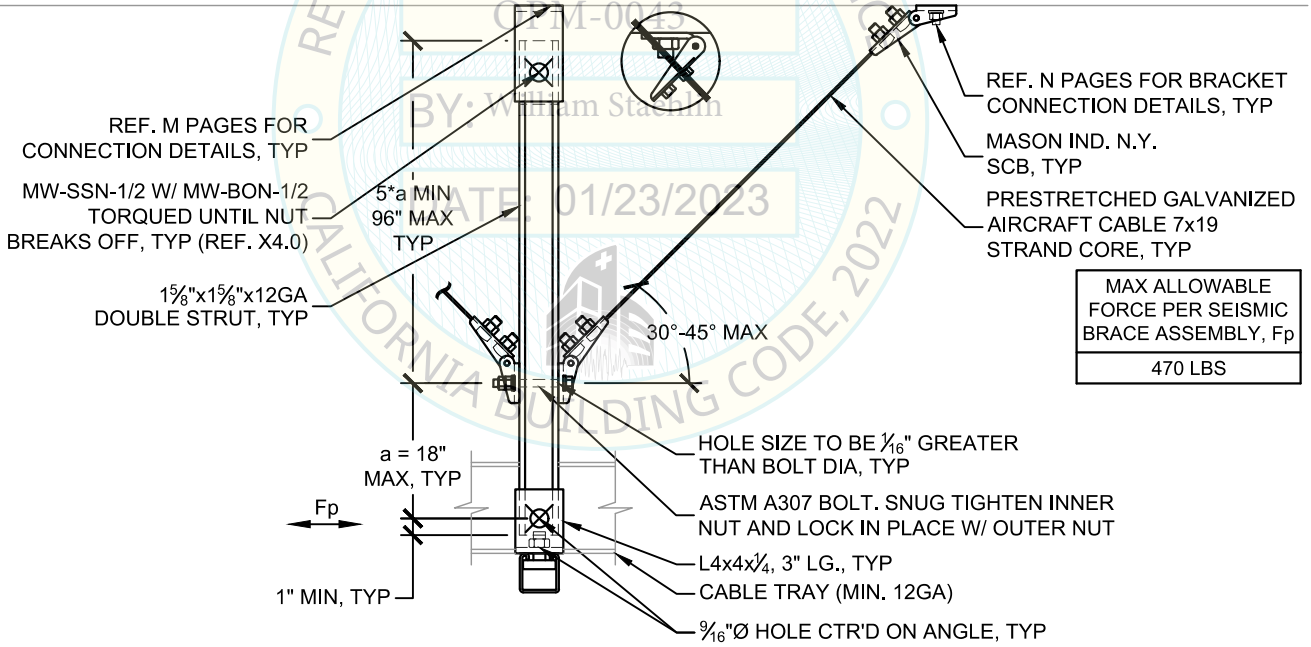

DOUBLE STRUT OPTION

REVIEWED FOR CODE COMPLIANCE
HCAi
OPM-0043
BY: William Staehlin
DATE: 01/23/2023
CALIFORNIA BUILDING CODE, 2022

NOTES:

1) REFER TO APPROPRIATE E PAGES FOR DIMENSIONS AND ANNOTATIONS NOT SHOWN.
2) SINGLE STRUT AND DOUBLE STRUT OPTIONS MAY CARRY UP TO A MAXIMUM OF 30LBS/FT OR 60LBS/FT, RESPECTIVELY.
3) CABLE TRAY SHALL BE APPROVED ON A PROJECT SPECIFIC BASIS OR PREAPPROVED BY OSHPD. SPACING LIMITS SET BY THE MANUFACTURER SHALL NOT BE EXCEEDED. CABLE TRAY BRACE SPACING SHALL BE APPROVED OR PREAPPROVED BY OSHPD.

MASON WEST
1601 E. Miraloma Ave. Placentia, CA 92870
TEL (714) 630 - 0701, www.masonwest.com

Jiefu "Jeff" Zhang, SE
California SE No. S5270

PAGE
A27.11

TRANSVERSE SEISMIC BRACING OFF ROD STIFFENER FOR SUSPENDED CONDUIT

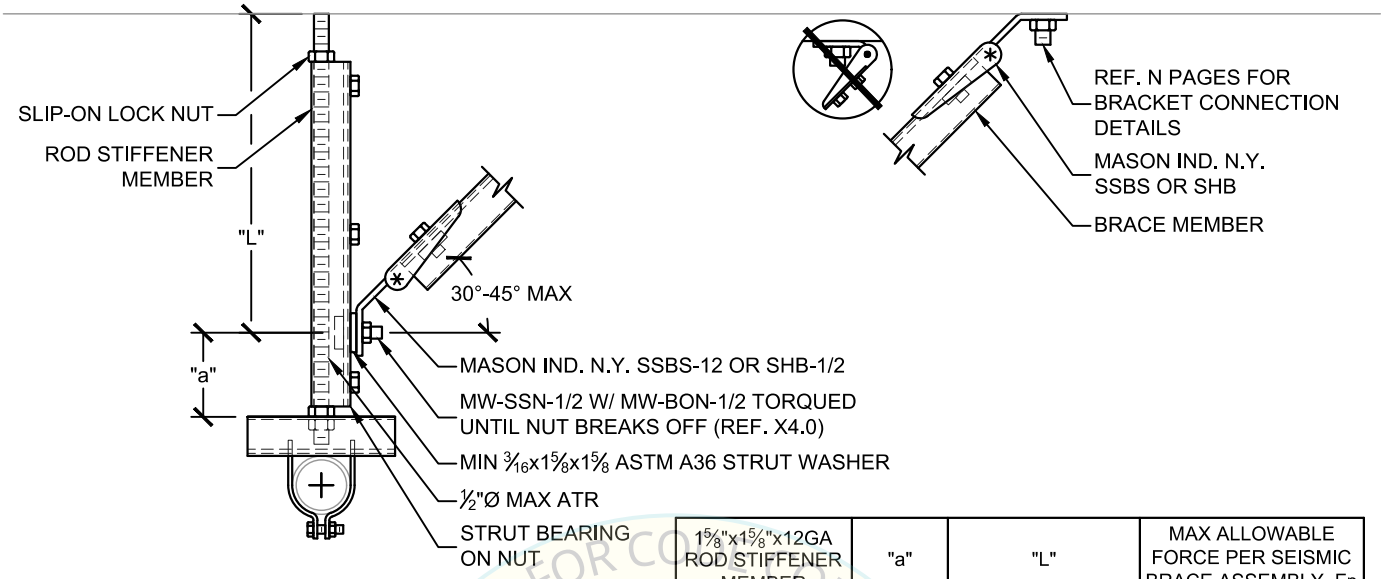

1 5/8"x1 5/8"x12GA ROD STIFFENER MEMBER	"a"	"L"	MAX ALLOWABLE FORCE PER SEISMIC BRACE ASSEMBLY, Fp
SINGLE STRUT	12" MAX	5*a MIN, 102" MAX	255 LBS
DOUBLE STRUT	18" MAX	5*a MIN, 96" MAX	500 LBS

SOLID BRACING OPTION

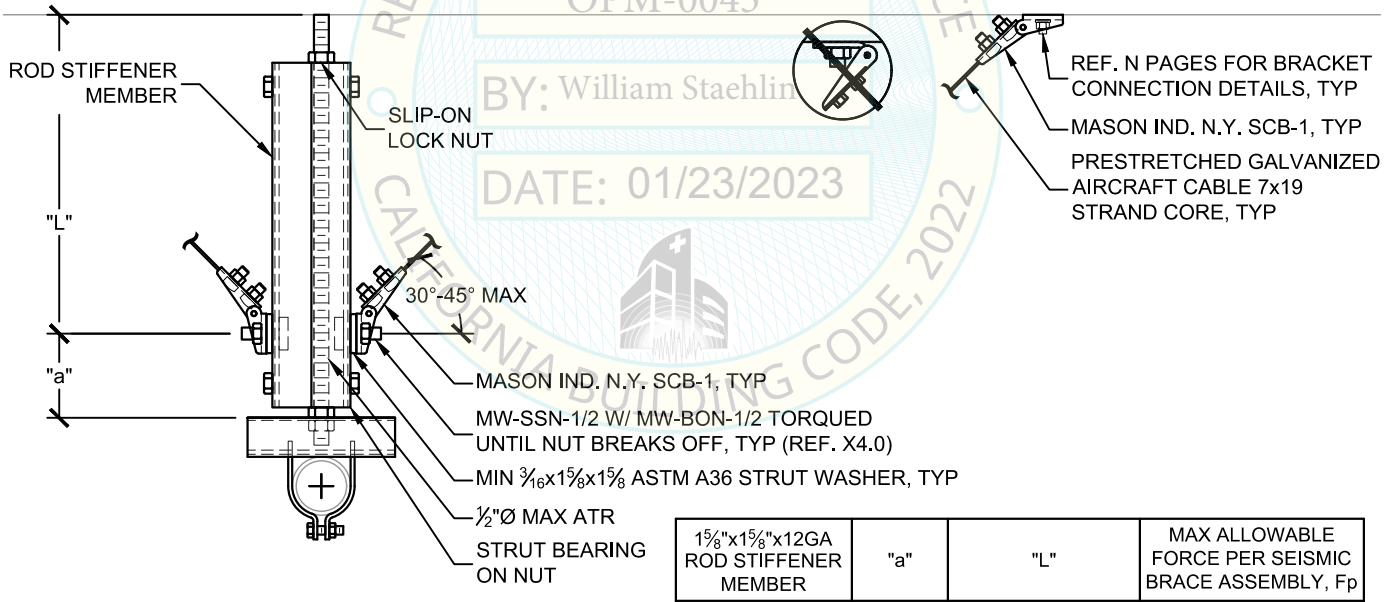

1 5/8"x1 5/8"x12GA ROD STIFFENER MEMBER	"a"	"L"	MAX ALLOWABLE FORCE PER SEISMIC BRACE ASSEMBLY, Fp
DOUBLE STRUT	18" MAX	5*a MIN, 96" MAX	470 LBS

CABLE BRACING OPTION

NOTE: REFER TO APPROPRIATE C PAGES AND A28.0 OR A28.1 FOR DIMENSIONS AND ANNOTATIONS NOT SHOWN.

REVIEWED FOR CODE COMPLIANCE
HCAI
OPM-0043
BY: William Staehlin
DATE: 01/23/2023
CALIFORNIA BUILDING CODE, 2022

MASON WEST
1601 E. Miraloma Ave. Placentia, CA 92870
TEL (714) 630 - 0701, www.masonwest.com

Jiefu "Jeff" Zhang, SE
California SE No. S5270

PAGE
A27.12

LONGITUDINAL SEISMIC BRACING OFF ROD STIFFENER FOR SUSPENDED CONDUIT

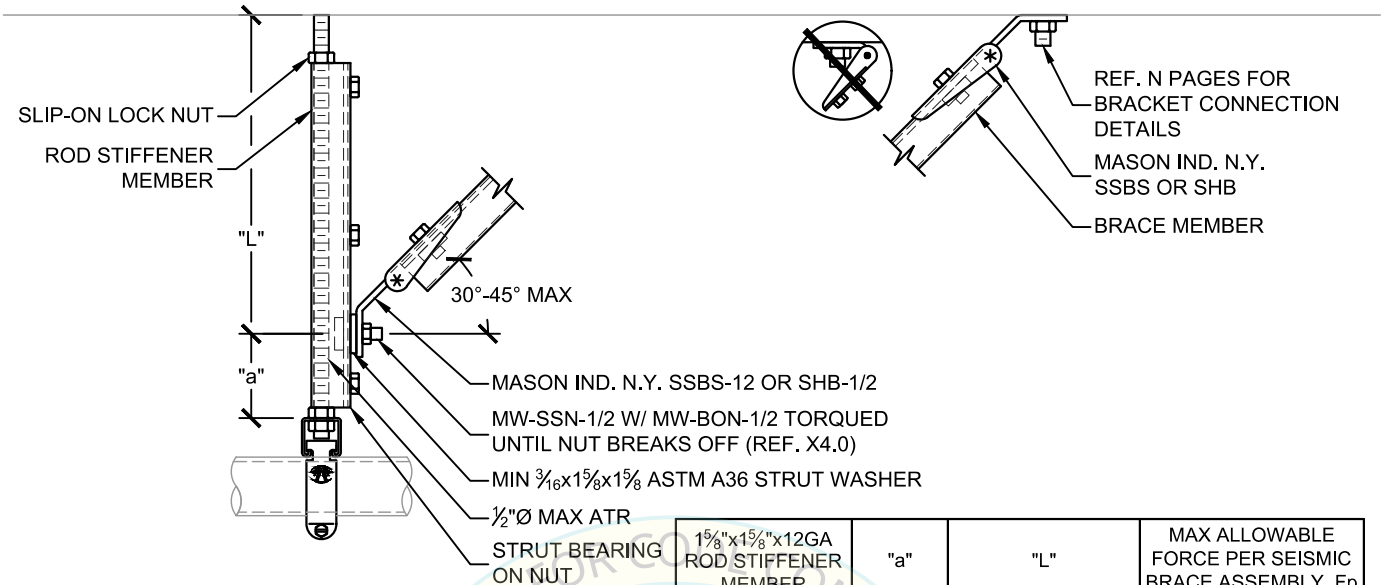

1 5/8"x1 5/8"x12GA ROD STIFFENER MEMBER	"a"	"L"	MAX ALLOWABLE FORCE PER SEISMIC BRACE ASSEMBLY, Fp
SINGLE STRUT	12" MAX	5*a MIN, 102" MAX	255 LBS
DOUBLE STRUT	18" MAX	5*a MIN, 96" MAX	500 LBS

SOLID BRACING OPTION

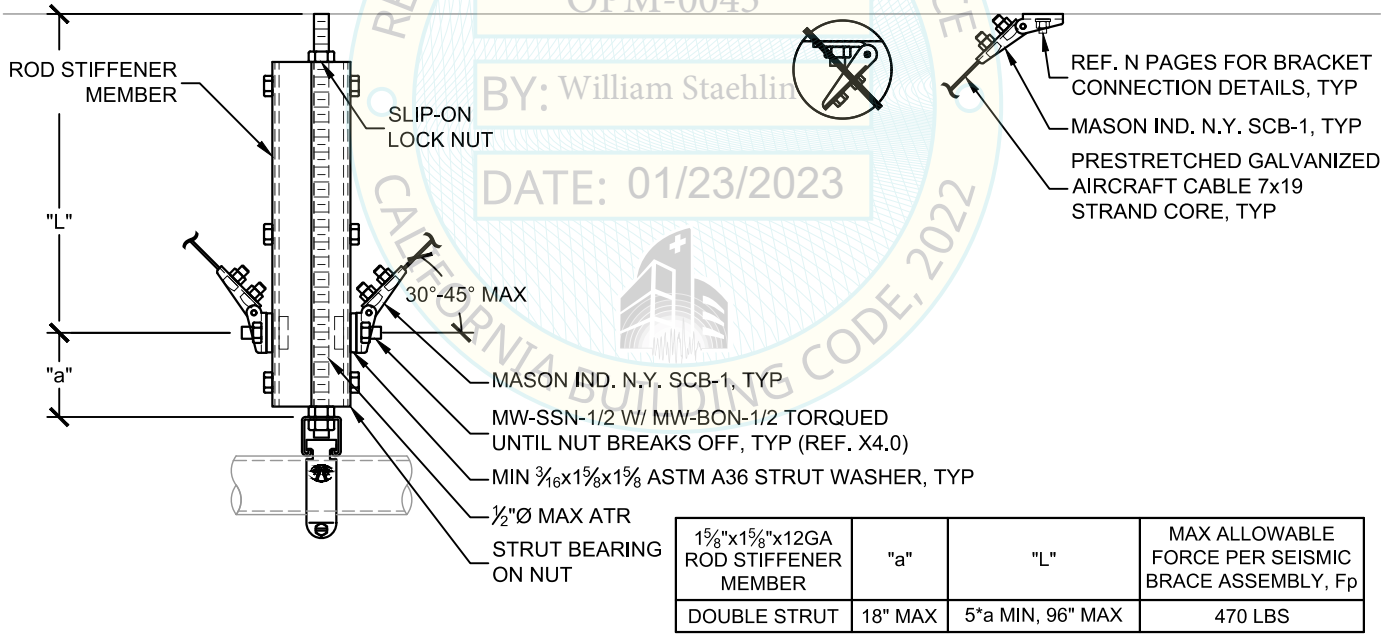

1 5/8"x1 5/8"x12GA ROD STIFFENER MEMBER	"a"	"L"	MAX ALLOWABLE FORCE PER SEISMIC BRACE ASSEMBLY, Fp
DOUBLE STRUT	18" MAX	5*a MIN, 96" MAX	470 LBS

CABLE BRACING OPTION

NOTE: REFER TO APPROPRIATE C PAGES AND A28.0 OR A28.1 FOR DIMENSIONS AND ANNOTATIONS NOT SHOWN.

MASON WEST
1601 E. Miraloma Ave. Placentia, CA 92870
TEL (714) 630 - 0701, www.masonwest.com

Jiefu "Jeff" Zhang, SE
California SE No. S5270

PAGE
A27.13

REVIEWED FOR CODE COMPLIANCE
HCAI
OPM-0043
BY: William Staehlin
DATE: 01/23/2023
CALIFORNIA BUILDING CODE, 2022

TRANSVERSE SEISMIC BRACING OFF ROD STIFFENER FOR SUSPENDED CONDUIT ON TRAPEZE

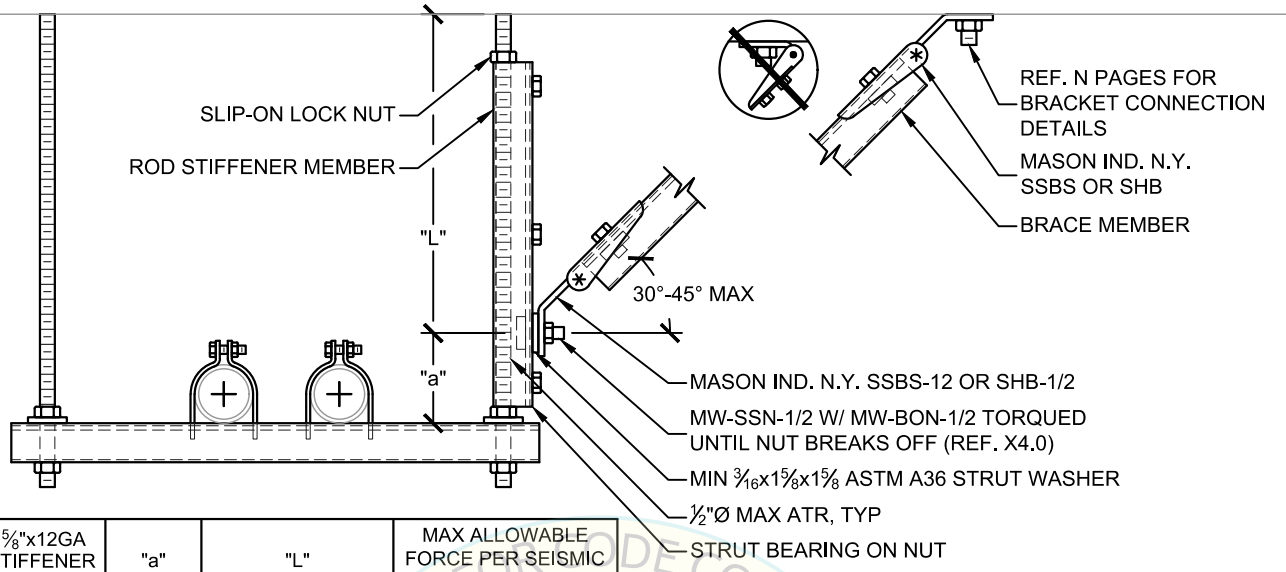

1⅝"x1⅝"x12GA ROD STIFFENER MEMBER	"a"	"L"	MAX ALLOWABLE FORCE PER SEISMIC BRACE ASSEMBLY, Fp
SINGLE STRUT	12" MAX	5*a MIN, 102" MAX	255 LBS
DOUBLE STRUT	18" MAX	5*a MIN, 96" MAX	500 LBS

SOLID BRACING OPTION

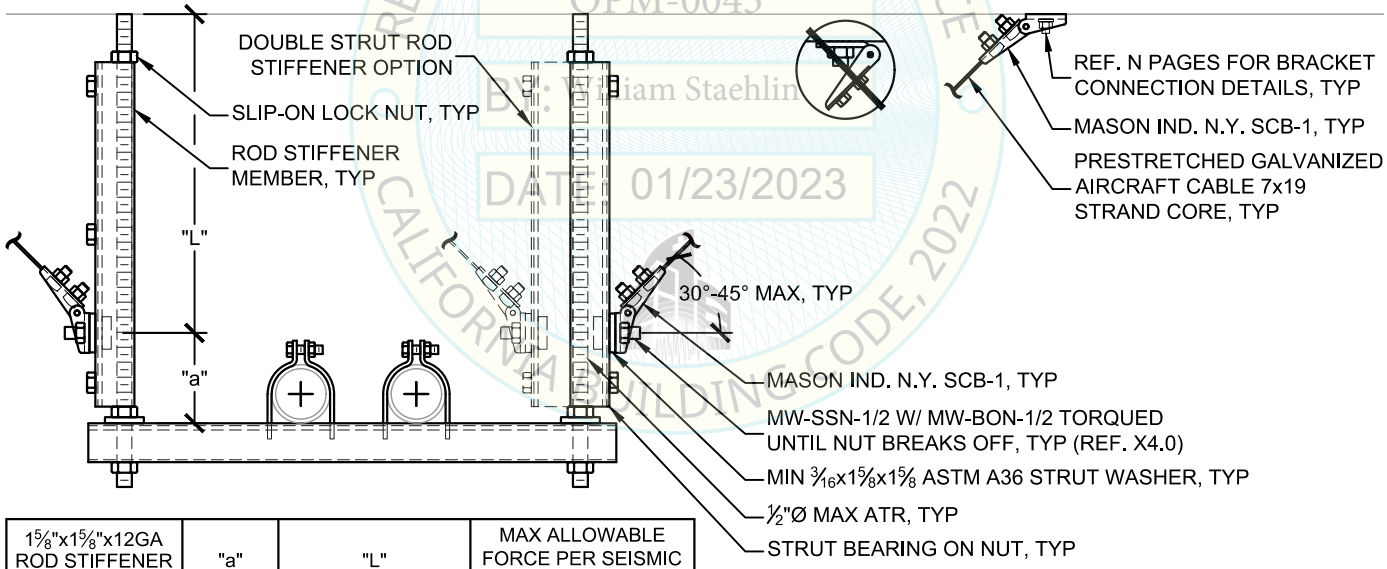

1⅝"x1⅝"x12GA ROD STIFFENER MEMBER	"a"	"L"	MAX ALLOWABLE FORCE PER SEISMIC BRACE ASSEMBLY, Fp
SINGLE STRUT	12" MAX	5*a MIN, 102" MAX	255 LBS
DOUBLE STRUT	18" MAX	5*a MIN, 96" MAX	470 LBS

CABLE BRACING OPTION

NOTE: REFER TO APPROPRIATE F PAGES FOR DIMENSIONS AND ANNOTATIONS NOT SHOWN.

REVIEWED FOR CODE COMPLIANCE CALIFORNIA BUILDING CODE, 2022
HCAi
OPM-0043
By: William Staehlin
DATE: 01/23/2023

MASON WEST
1601 E. Miraloma Ave. Placentia, CA 92870
TEL (714) 630 - 0701, www.masonwest.com

Jiefu "Jeff" Zhang, SE
California SE No. S5270

PAGE
A27.14

LONGITUDINAL SEISMIC BRACING OFF ROD STIFFENER FOR SUSPENDED CONDUIT ON TRAPEZE

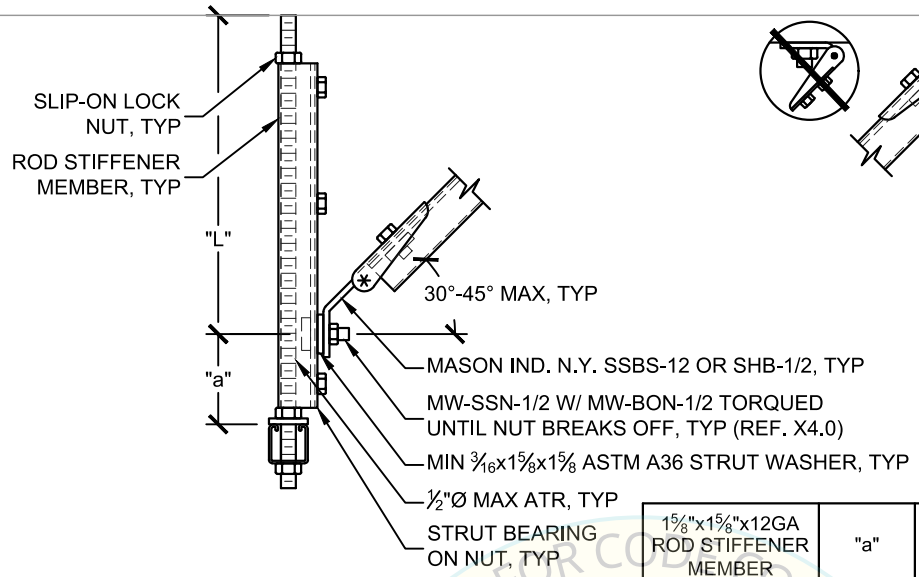

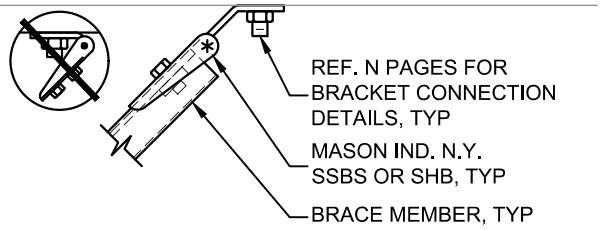

1 5/8"x1 5/8"x12GA ROD STIFFENER MEMBER	"a"	"L"	MAX ALLOWABLE FORCE PER SEISMIC BRACE ASSEMBLY, Fp
SINGLE STRUT	12" MAX	5*a MIN, 102" MAX	255 LBS
DOUBLE STRUT	18" MAX	5*a MIN, 96" MAX	500 LBS

SOLID BRACING OPTION

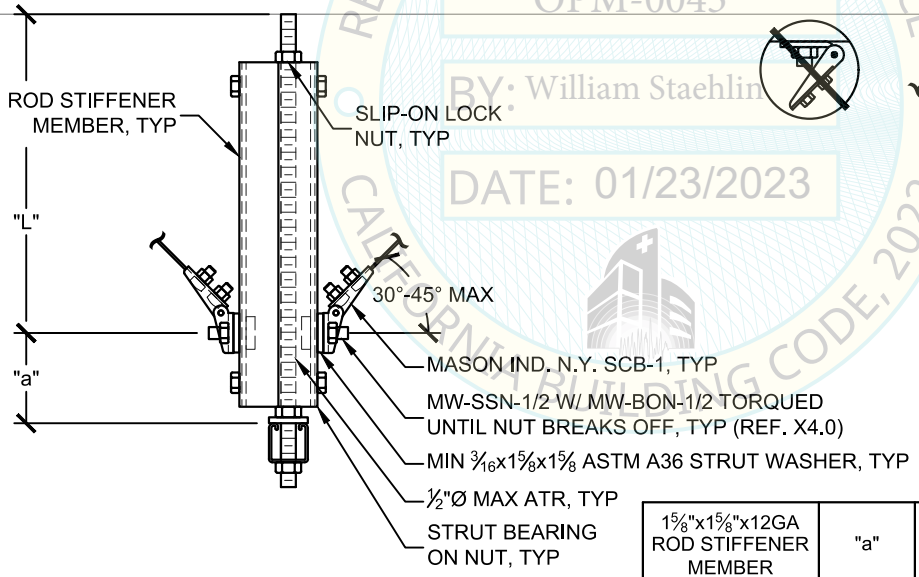

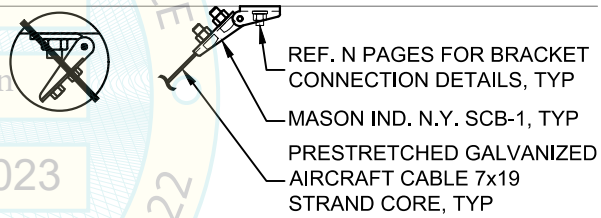

1 5/8"x1 5/8"x12GA ROD STIFFENER MEMBER	"a"	"L"	MAX ALLOWABLE FORCE PER SEISMIC BRACE ASSEMBLY, Fp
DOUBLE STRUT	18" MAX	5*a MIN, 96" MAX	470 LBS

CABLE BRACING OPTION

NOTES:
1) REFER TO APPROPRIATE F PAGES FOR DIMENSIONS AND ANNOTATIONS NOT SHOWN.
2) CONDUIT NOT SHOWN FOR CLARITY.

REVIEWED FOR CODE COMPLIANCE
HCAI
OPM-0043
BY: William Staehlin
DATE: 01/23/2023
CALIFORNIA BUILDING CODE, 2022

MASON WEST
1601 E. Miraloma Ave. Placentia, CA 92870
TEL (714) 630 - 0701, www.masonwest.com

Jiefu "Jeff" Zhang, SE
California SE No. S5270

PAGE
A27.15

TRANSVERSE SEISMIC BRACING OFF ROD STIFFENER FOR SUSPENDED RACEWAYS ON TRAPEZE

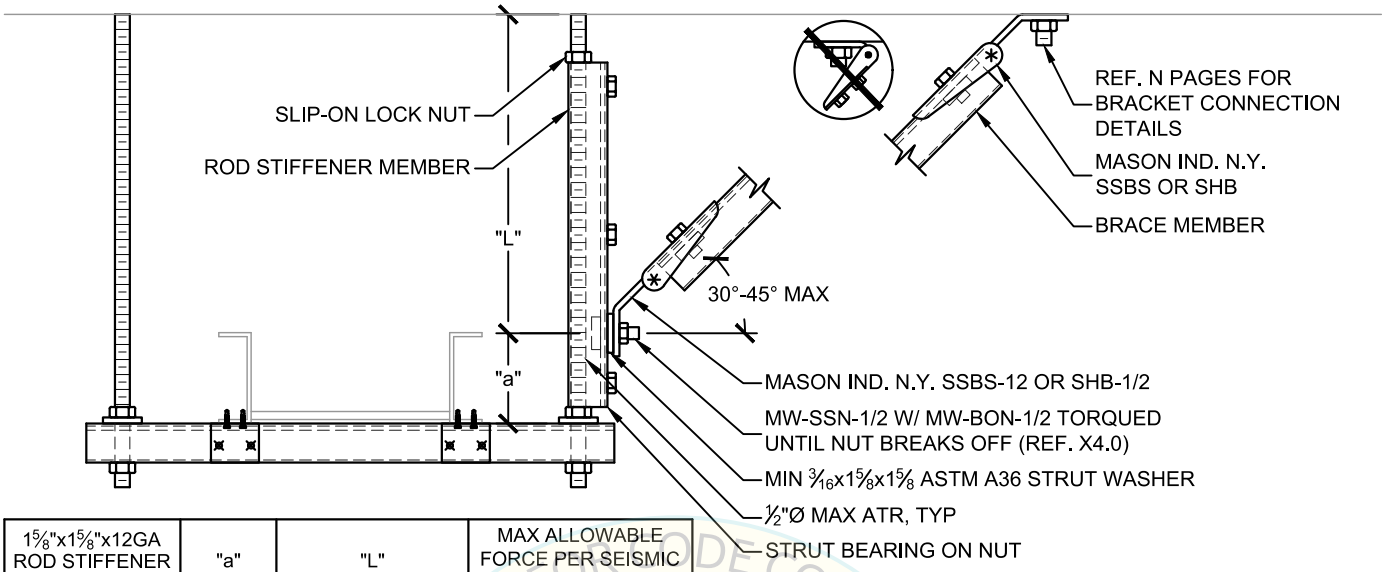

1⅝"x1⅝"x12GA ROD STIFFENER MEMBER	"a"	"L"	MAX ALLOWABLE FORCE PER SEISMIC BRACE ASSEMBLY, Fp
SINGLE STRUT	12" MAX	5*a MIN, 102" MAX	255 LBS
DOUBLE STRUT	18" MAX	5*a MIN, 96" MAX	500 LBS

SOLID BRACING OPTION

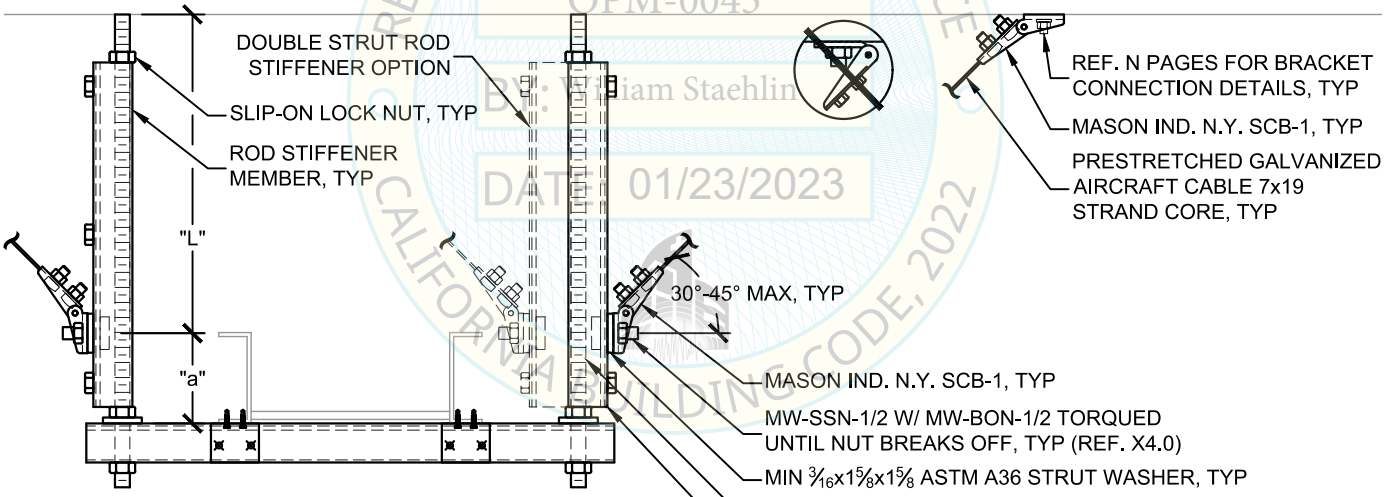

1⅝"x1⅝"x12GA ROD STIFFENER MEMBER	"a"	"L"	MAX ALLOWABLE FORCE PER SEISMIC BRACE ASSEMBLY, Fp
SINGLE STRUT	12" MAX	5*a MIN, 102" MAX	255 LBS
DOUBLE STRUT	18" MAX	5*a MIN, 96" MAX	470 LBS

CABLE BRACING OPTION

NOTE: REFER TO APPROPRIATE E PAGES FOR DIMENSIONS AND ANNOTATIONS NOT SHOWN.

REVIEWED FOR CODE COMPLIANCE
CALIFORNIA BUILDING CODE, 2022
HCAi
OPM-0043
By: William Staehlin
DATE: 01/23/2023

MASON WEST
1601 E. Miraloma Ave. Placentia, CA 92870
TEL (714) 630 - 0701, www.masonwest.com

Jiefu "Jeff" Zhang, SE
California SE No. S5270

PAGE
A27.16

LONGITUDINAL SEISMIC BRACING OFF ROD STIFFENER FOR SUSPENDED RACEWAYS ON TRAPEZE

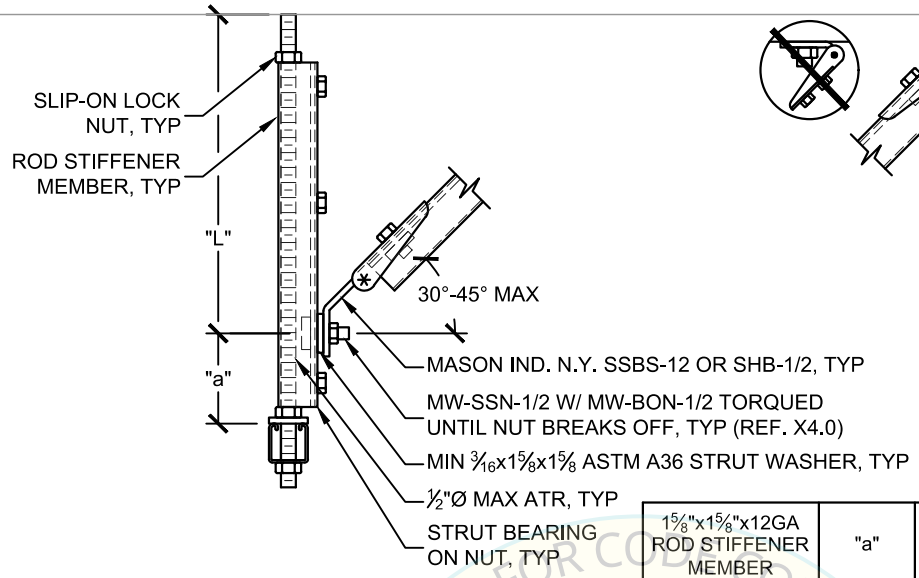

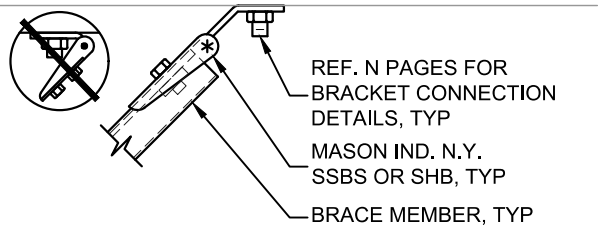

1 5/8"x1 5/8"x12GA ROD STIFFENER MEMBER	"a"	"L"	MAX ALLOWABLE FORCE PER SEISMIC BRACE ASSEMBLY, Fp
SINGLE STRUT	12" MAX	5*a MIN, 102" MAX	255 LBS
DOUBLE STRUT	18" MAX	5*a MIN, 96" MAX	500 LBS

SOLID BRACING OPTION

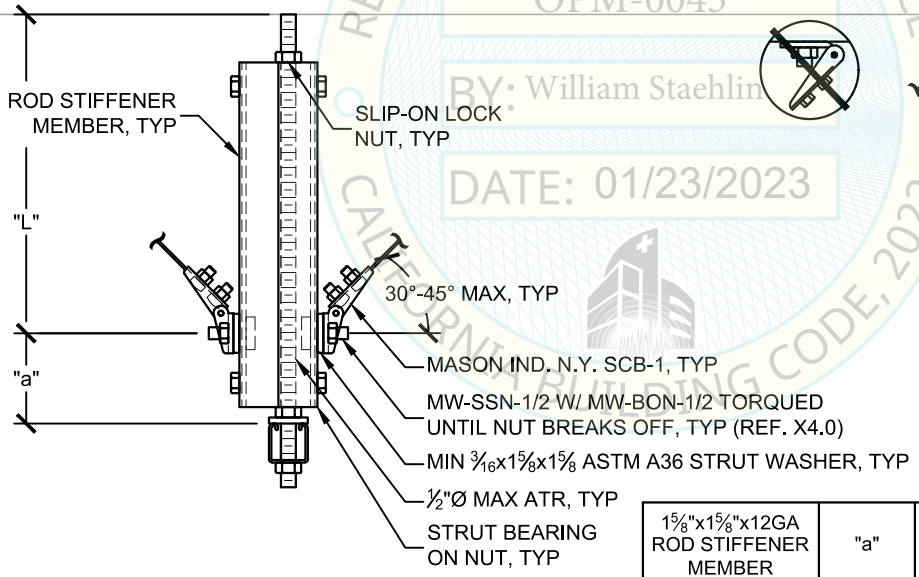

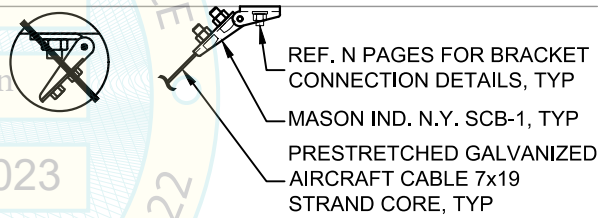

1 5/8"x1 5/8"x12GA ROD STIFFENER MEMBER	"a"	"L"	MAX ALLOWABLE FORCE PER SEISMIC BRACE ASSEMBLY, Fp
DOUBLE STRUT	18" MAX	5*a MIN, 96" MAX	470 LBS

CABLE BRACING OPTION

NOTES:
1) REFER TO APPROPRIATE E PAGES FOR DIMENSIONS AND ANNOTATIONS NOT SHOWN.
2) RACEWAY NOT SHOWN FOR CLARITY.

REVIEWED FOR CODE COMPLIANCE
HCAI
OPM-0043
BY: William Staehlin
DATE: 01/23/2023
CALIFORNIA BUILDING CODE, 2022

MASON WEST
1601 E. Miraloma Ave. Placentia, CA 92870
TEL (714) 630 - 0701, www.masonwest.com

Jiefu "Jeff" Zhang, SE
California SE No. S5270

PAGE
A27.17

SEISMIC SOLID BRACING PIPE CLAMP OPTION FOR INDIVIDUALLY SUSPENDED CONDUIT

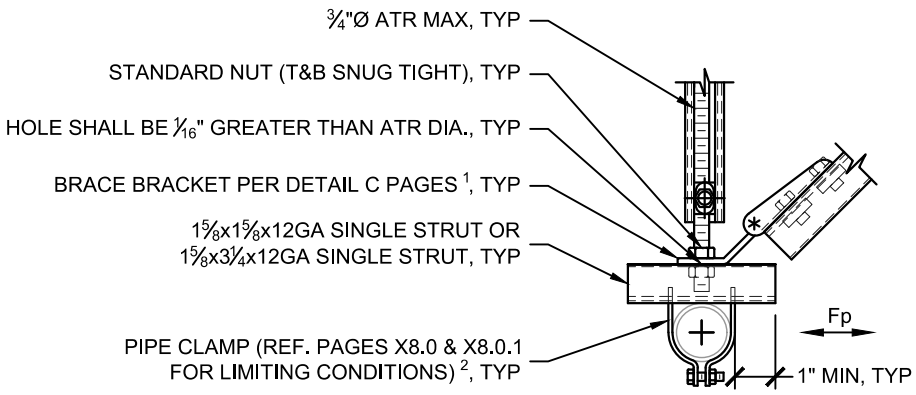

TRANSVERSE OPTION

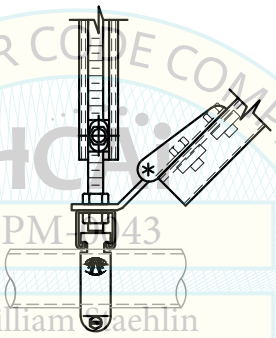

LONGITUDINAL OPTION

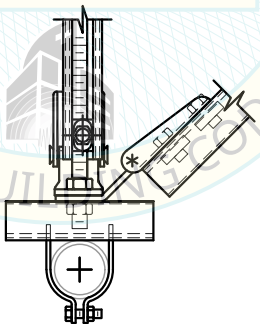

ALL-DIRECTIONAL OPTION

REVIEWED FOR CODE COMPLIANCE
HCAI
OPM-0043
BY: William Staehlin
DATE: 01/23/2023
CALIFORNIA BUILDING CODE, 2022

NOTES:
1) REFER TO APPROPRIATE DETAIL C PAGES FOR CALL-OUTS, DIMENSIONS AND NOTATIONS NOT SHOWN.
2) CLAMP RATING MAY LOWER MAX ALLOWABLE Fp.

MASON WEST
1601 E. Miraloma Ave. Placentia, CA 92870
TEL (714) 630 - 0701, www.masonwest.com

Jiefu "Jeff" Zhang, SE
California SE No. S5270

PAGE
A28.0

SEISMIC CABLE BRACING PIPE CLAMP OPTION FOR INDIVIDUALLY SUSPENDED CONDUIT

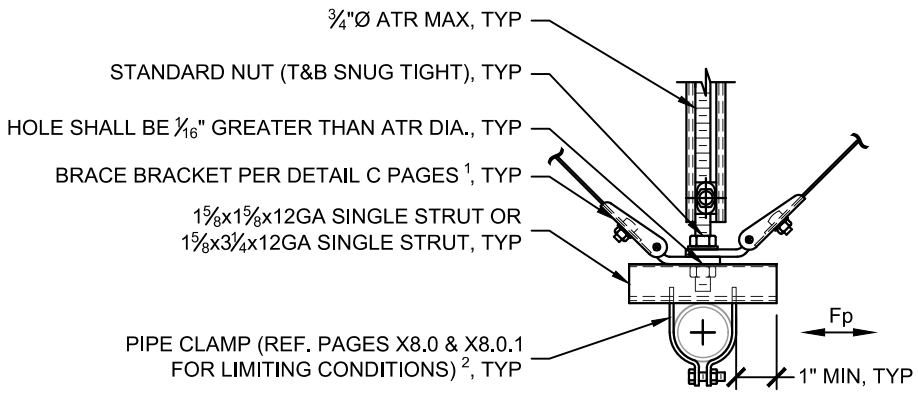

TRANSVERSE OPTION

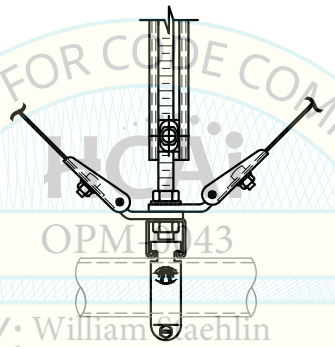

LONGITUDINAL OPTION

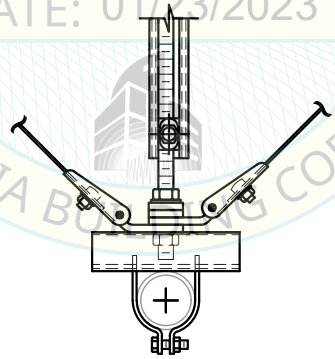

ALL-DIRECTIONAL OPTION

REVIEWED FOR CODE COMPLIANCE
OPM-0043
BY: William Staehlin
DATE: 01/23/2023
CALIFORNIA BUILDING CODE, 2022

NOTES:
1) REFER TO APPROPRIATE DETAIL C PAGES FOR CALL-OUTS, DIMENSIONS AND NOTATIONS NOT SHOWN.
2) CLAMP RATING MAY LOWER MAX ALLOWABLE Fp.

MASON WEST
1601 E. Miraloma Ave. Placentia, CA 92870
TEL (714) 630 - 0701, www.masonwest.com

Jiefu "Jeff" Zhang, SE
California SE No. S5270

PAGE
A28.1

INDIVIDUALLY SUSPENDED STEEL PIPE

SEISMIC SOLID BRACING INSTALLATION REQUIREMENTS

LATERAL FORCE
Fp = 0.25g (ASD)
VERTICAL FORCE
Fpv = 0.375g (ASD)

Fp = 0.25g Fpv = 0.38g			SOLID (RIGID) BRACING FOR 45° BRACE ANGLE MAXIMUM BRACE SPACING - OPTION #1							
			INSTALLATION DETAILS							
			SEISMIC BRACE			HANGER CONNECTION			BRACE CONNECTION	
PIPE SIZE	WEIGHT	SUPPORT SPACING	TRANS.	LONG.	ALL-DIR.	TRANS.	LONG.	ALL-DIR.	TRANS.	LONG./ALL-DIR.
(DIA.)	(PLF)	(FT)	40 FT*	80 FT*	80 FT*	BRACE	BRACE	BRACE	BRACE	BRACE
2	6.2	10	C1.10	C1.11	C1.12	38C	38D	38E	50A	50C
2.5	9.1	11	C1.20	C1.21	C1.22	50D	50E	50F	50B	50D
3	12.1	12	C1.20	C1.21	C1.22	50E	50G	50G	50C	50E
4	18.3	14	C1.30	C1.32	C1.34	63G	63J	63K	63D	63F
5	26.6	16	C1.30	C1.32	C1.34	63K	63L	63M	63E	63G
6	34.8	17	C1.40	C1.43	C1.45	75L	75M	75N	63F	75J
8	55.1	19	C1.40	C1.47	C1.48	75P	75Q	75Q	63G	75L
10	80.2	20	C1.41	C1.47	C1.48	75Q	75R	75R	75J	75N
12	109	20	C1.41	C1.47	C1.48.1	75R	75S	75S	75L	75P
14	122	20	C1.46	C1.47	C1.48.1	75R	75S	75S	75M	75Q
16	150	20	C1.46	C1.47	C1.72	75S	75S	125T	75M	75Q
18	190	20	C1.46	C1.64	C1.75	75S	100T	125T	75N	125R

Fp = 0.25g Fpv = 0.38g			SOLID (RIGID) BRACING FOR 45° BRACE ANGLE MAXIMUM BRACE SPACING - OPTION #2							
			INSTALLATION DETAILS							
			SEISMIC BRACE			HANGER CONNECTION			BRACE CONNECTION	
PIPE SIZE	WEIGHT	SUPPORT SPACING	TRANS.	LONG.	ALL-DIR.	TRANS.	LONG.	ALL-DIR.	TRANS.	LONG./ALL-DIR.
(DIA.)	(PLF)	(FT)	30 FT*	60 FT*	60 FT*	BRACE	BRACE	BRACE	BRACE	BRACE
2	6.2	10	C1.10	C1.11	C1.12	38C	38D	38D	50A	50B
2.5	9.1	11	C1.20	C1.21	C1.22	50D	50E	50E	50A	50C
3	12.1	12	C1.20	C1.21	C1.22	50E	50F	50G	50B	50D
4	18.3	14	C1.30	C1.32	C1.34	63G	63H	63J	63C	63E
5	26.6	16	C1.30	C1.32	C1.34	63J	63K	63L	63D	63F
6	34.8	17	C1.40	C1.42	C1.44	75L	75M	75M	63E	63G
8	55.1	19	C1.40	C1.43	C1.45	75N	75P	75Q	63F	75K
10	80.2	20	C1.40	C1.47	C1.48	75Q	75Q	75R	63H	75L
12	109	20	C1.41	C1.47	C1.48	75R	75R	75S	75J	75N
14	122	20	C1.46	C1.47	C1.48	75R	75S	75S	75K	75N
16	150	20	C1.46	C1.47	C1.48.1	75S	75S	75S	75L	75P
18	190	20	C1.46	C1.47	C1.72	75S	75T	125T	75M	75Q
20	214	20	C1.70	C1.71	C1.75	125T	125T	125T	125N	125Q

* - BRACE SPACING SHALL NOT EXCEED THOSE TABULATED IN SECTION S.

NOTE: INSTALLATION DETAILS TABULATED ABOVE ARE BASED ON USE OF THE MW-WPL SEISMIC ATTACHMENT TO STEEL PIPE. IF THE DESIGNER PREFERS TO USE THE MW-SPC, CALCULATE THE SEISMIC DEMAND AND COMPARE IT TO THE SEISMIC CAPACITY OF THE MW-SPC AS SHOWN IN SECTION C. IF THE DEMAND IS LESS THAN OR EQUAL TO THE CAPACITY, THE MW-SPC IS ACCEPTABLE.

REVIEWED FOR CODE COMPLIANCE
HCAI
OPM-0043
Reviewed by William Staehlin
DATE: 1/23/2023
STATE OF CALIFORNIA
OFFICE OF PUBLIC SCHOOL CONSTRUCTION

MASON WEST
1601 E. Miraloma Ave. Placentia, CA 92870
TEL (714) 630 - 0701, www.masonwest.com

Jiefu "Jeff" Zhang, SE
California SE No. S5270

INDIVIDUALLY SUSPENDED STEEL PIPE

SEISMIC SOLID BRACING INSTALLATION REQUIREMENTS

LATERAL FORCE
Fp = 0.25g (ASD)
VERTICAL FORCE
Fpv = 0.375g (ASD)

Fp = 0.25g Fpv = 0.38g			SOLID (RIGID) BRACING FOR 45° BRACE ANGLE MAXIMUM BRACE SPACING - OPTION #3							
			INSTALLATION DETAILS							
			SEISMIC BRACE			HANGER CONNECTION			BRACE CONNECTION	
PIPE SIZE	WEIGHT	SUPPORT SPACING	TRANS.	LONG.	ALL-DIR.	TRANS.	LONG.	ALL-DIR.	TRANS.	LONG./ALL-DIR.
(DIA.)	(PLF)	(FT)	20 FT*	20 FT*	20 FT*	BRACE	BRACE	BRACE	BRACE	BRACE
2	6.2	10	C1.10	C1.11	C1.12	38B	38B	38C	50A	50A
2.5	9.1	11	C1.20	C1.21	C1.22	50D	50D	50D	50A	50A
3	12.1	12	C1.20	C1.21	C1.22	50E	50E	50E	50A	50A
4	18.3	14	C1.30	C1.32	C1.34	63F	63F	63G	63B	63B
5	26.6	16	C1.30	C1.32	C1.34	63J	63J	63J	63C	63C
6	34.8	17	C1.40	C1.42	C1.44	75K	75K	75L	63D	63D
8	55.1	19	C1.40	C1.42	C1.44	75N	75N	75N	63E	63E
10	80.2	20	C1.50	C1.51	C1.52	88Q	88Q	88Q	63F	63F
12	109	20	C1.50	C1.51	C1.52	88R	88R	88R	63G	63G
14	122	20	C1.46	C1.47	C1.48	75R	75R	75R	75H	75H
16	150	20	C1.46	C1.47	C1.48	75R	75R	75S	75J	75J
18	190	20	C1.46	C1.47	C1.48	75S	75S	75S	75K	75K
20	214	20	C1.70	C1.71	C1.72	125S	125S	125S	125L	125L
24	189	20	C1.70	C1.71	C1.72	125T	125T	125T	125M	125M

* - BRACE SPACING SHALL NOT EXCEED THOSE TABULATED IN SECTION S.

NOTE: INSTALLATION DETAILS TABULATED ABOVE ARE BASED ON USE OF THE MW-WPL SEISMIC ATTACHMENT TO STEEL PIPE. IF THE DESIGNER PREFERS TO USE THE MW-SPC, CALCULATE THE SEISMIC DEMAND AND COMPARE IT TO THE SEISMIC CAPACITY OF THE MW-SPC AS SHOWN IN SECTION C. IF THE DEMAND IS LESS THAN OR EQUAL TO THE CAPACITY, THE MW-SPC IS ACCEPTABLE.

REVIEWED FOR CODE COMPLIANCE
CALIFORNIA BUILDING CODE, 2022
OPM-0043
BY: William Staehlin
DATE: 01/23/2023

MASON WEST
1601 E. Miraloma Ave. Placentia, CA 92870
TEL (714) 630 - 0701, www.masonwest.com

Jiefu "Jeff" Zhang, SE
California SE No. S5270

PAGE
B1.0.1

INDIVIDUALLY SUSPENDED STEEL PIPE

SEISMIC SOLID BRACING INSTALLATION REQUIREMENTS

LATERAL FORCE
Fp = 0.5g (ASD)
VERTICAL FORCE
Fpv = 0.375g (ASD)

Fp = 0.5g Fpv = 0.38g			SOLID (RIGID) BRACING FOR 45° BRACE ANGLE MAXIMUM BRACE SPACING - OPTION #1							
			INSTALLATION DETAILS							
			SEISMIC BRACE			HANGER CONNECTION			BRACE CONNECTION	
PIPE SIZE	WEIGHT	SUPPORT SPACING	TRANS.	LONG.	ALL-DIR.	TRANS.	LONG.	ALL-DIR.	TRANS.	LONG./ALL-DIR.
(DIA.)	(PLF)	(FT)	30 FT*	60 FT*	60 FT*	BRACE	BRACE	BRACE	BRACE	BRACE
2	6.2	10	C1.10	C1.11	C1.12	38D	38E	38F	50B	50D
2.5	9.1	11	C1.20	C1.21	C1.22	50E	50F	50G	50C	50E
3	12.1	12	C1.20	C1.21	C1.22	50F	50H	50J	50D	50F
4	18.3	14	C1.30	C1.32	C1.34	63H	63K	63L	63E	63G
5	26.6	16	C1.30	C1.33	C1.45	63K	63M	75N	63F	63J
6	34.8	17	C1.40	C1.43	C1.45	75M	75N	75P	63G	75L
8	55.1	10	C1.41	C1.47	C1.48	75P	75Q	75R	75K	75N
10	80.2	20	C1.46	C1.47	C1.48.1	75Q	75R	75S	75L	75P
12	109	20	C1.46	C1.64	C1.75	75R	100S	125T	75N	125Q
14	122	20	C1.46	C1.64	C1.75	75S	100S	125T	75N	125R
16	150	20	C1.46	C1.74	C1.75	75S	125T	125T	75P	125R

Fp = 0.5g Fpv = 0.38g			SOLID (RIGID) BRACING FOR 45° BRACE ANGLE MAXIMUM BRACE SPACING - OPTION #2							
			INSTALLATION DETAILS							
			SEISMIC BRACE			HANGER CONNECTION			BRACE CONNECTION	
PIPE SIZE	WEIGHT	SUPPORT SPACING	TRANS.	LONG.	ALL-DIR.	TRANS.	LONG.	ALL-DIR.	TRANS.	LONG./ALL-DIR.
(DIA.)	(PLF)	(FT)	20 FT*	30 FT*	30 FT*	BRACE	BRACE	BRACE	BRACE	BRACE
2	6.2	10	C1.10	C1.11	C1.12	38C	38D	38D	50A	50B
2.5	9.1	11	C1.20	C1.21	C1.22	50D	50E	50E	50B	50C
3	12.1	12	C1.20	C1.21	C1.22	50E	50F	50G	50C	50D
4	18.3	14	C1.30	C1.32	C1.34	63G	63H	63J	63D	63E
5	26.6	16	C1.30	C1.32	C1.34	63K	63K	63L	63E	63F
6	34.8	17	C1.40	C1.42	C1.44	75L	75M	75M	63F	63G
8	55.1	19	C1.40	C1.43	C1.45	75P	75P	75Q	63G	75K
10	80.2	20	C1.41	C1.47	C1.48	75Q	75Q	75R	75J	75L
12	109	20	C1.41	C1.47	C1.48	75R	75R	75S	75L	75N
14	122	20	C1.46	C1.47	C1.48	75R	75S	75S	75M	75N
16	150	20	C1.46	C1.47	C1.48.1	75S	75S	75S	75M	75P
18	190	20	C1.46	C1.47	C1.72	75S	75T	125T	75N	75Q
20	214	20	C1.70	C1.71	C1.75	125T	125T	125T	125P	125Q

* - BRACE SPACING SHALL NOT EXCEED THOSE TABULATED IN SECTION S.

NOTE: INSTALLATION DETAILS TABULATED ABOVE ARE BASED ON USE OF THE MW-WPL SEISMIC ATTACHMENT TO STEEL PIPE. IF THE DESIGNER PREFERS TO USE THE MW-SPC, CALCULATE THE SEISMIC DEMAND AND COMPARE IT TO THE SEISMIC CAPACITY OF THE MW-SPC AS SHOWN IN SECTION C. IF THE DEMAND IS LESS THAN OR EQUAL TO THE CAPACITY, THE MW-SPC IS ACCEPTABLE.

REVIEWED FOR CODE COMPLIANCE
OPM-0043
By William Staehlin
DATE: 1/23/2023

MASON WEST
1601 E. Miraloma Ave. Placentia, CA 92870
TEL (714) 630 - 0701, www.masonwest.com

Jiefu "Jeff" Zhang, SE
California SE No. S5270

PAGE
B1.1

INDIVIDUALLY SUSPENDED STEEL PIPE

SEISMIC SOLID BRACING INSTALLATION REQUIREMENTS

LATERAL FORCE
Fp = 0.5g (ASD)
VERTICAL FORCE
Fpv = 0.375g (ASD)

Fp = 0.5g Fpv = 0.38g			SOLID (RIGID) BRACING FOR 45° BRACE ANGLE MAXIMUM BRACE SPACING - OPTION #3							
			INSTALLATION DETAILS							
			SEISMIC BRACE			HANGER CONNECTION			BRACE CONNECTION	
PIPE SIZE	WEIGHT	SUPPORT SPACING	TRANS.	LONG.	ALL-DIR.	TRANS.	LONG.	ALL-DIR.	TRANS.	LONG./ALL-DIR.
(DIA.)	(PLF)	(FT)	10 FT*	20 FT*	20 FT*	BRACE	BRACE	BRACE	BRACE	BRACE
2	6.2	10	C1.10	C1.11	C1.12	38B	38C	38D	50A	50A
2.5	9.1	11	C1.20	C1.21	C1.22	50D	50D	50E	50A	50B
3	12.1	12	C1.20	C1.21	C1.22	50E	50E	50F	50A	50C
4	18.3	14	C1.30	C1.32	C1.34	63F	63G	63H	63B	63D
5	26.6	16	C1.30	C1.32	C1.34	63J	63K	63K	63C	63E
6	34.8	17	C1.40	C1.42	C1.44	75K	75L	75M	63D	63F
8	55.1	19	C1.40	C1.42	C1.44	75N	75P	75P	63E	63G
10	80.2	20	C1.50	C1.43	C1.45	88Q	75Q	75Q	63F	75J
12	109	20	C1.50	C1.43	C1.45	88R	75R	75R	63G	75L
14	122	20	C1.46	C1.47	C1.48	75R	75R	75S	75H	75M
16	150	20	C1.46	C1.47	C1.48	75R	75S	75S	75J	75M
18	190	20	C1.46	C1.47	C1.48	75S	75S	75T	75K	75N
20	214	20	C1.70	C1.71	C1.72	125S	125T	125T	125L	125P

* - BRACE SPACING SHALL NOT EXCEED THOSE TABULATED IN SECTION S.

NOTE: INSTALLATION DETAILS TABULATED ABOVE ARE BASED ON USE OF THE MW-WPL SEISMIC ATTACHMENT TO STEEL PIPE. IF THE DESIGNER PREFERS TO USE THE MW-SPC, CALCULATE THE SEISMIC DEMAND AND COMPARE IT TO THE SEISMIC CAPACITY OF THE MW-SPC AS SHOWN IN SECTION C. IF THE DEMAND IS LESS THAN OR EQUAL TO THE CAPACITY, THE MW-SPC IS ACCEPTABLE.

REVIEWED FOR CODE COMPLIANCE
OPM-0043
BY: William Staehlin
DATE: 01/23/2023
CALIFORNIA BUILDING CODE, 2022

MASON WEST
1601 E. Miraloma Ave. Placentia, CA 92870
TEL (714) 630 - 0701, www.masonwest.com

Jiefu "Jeff" Zhang, SE
California SE No. S5270

PAGE
B1.1.1

INDIVIDUALLY SUSPENDED STEEL PIPE

SEISMIC SOLID BRACING INSTALLATION REQUIREMENTS

LATERAL FORCE
Fp = 1.0g (ASD)
VERTICAL FORCE
Fpv = 0.375g (ASD)

Fp = 1g Fpv = 0.38g			SOLID (RIGID) BRACING FOR 45° BRACE ANGLE MAXIMUM BRACE SPACING - OPTION #1							
			INSTALLATION DETAILS							
			SEISMIC BRACE			HANGER CONNECTION			BRACE CONNECTION	
PIPE SIZE	WEIGHT	SUPPORT SPACING	TRANS.	LONG.	ALL-DIR.	TRANS.	LONG.	ALL-DIR.	TRANS.	LONG./ALL-DIR.
(DIA.)	(PLF)	(FT)	40 FT*	40 FT*	40 FT*	BRACE	BRACE	BRACE	BRACE	BRACE
2	6.2	10	C1.10	C1.11	C1.12	38E	38E	38F	50E	50E
2.5	9.1	11	C1.20	C1.21	C1.22	50G	50G	50H	50F	50F
3	12.1	12	C1.30	C1.21	C1.22	63J	50J	50K	63G	50G
4	18.3	14	C1.31	C1.33	C1.35	63L	63L	63M	63J	63J
5	26.6	16	C1.41	C1.33	C1.45	75N	63N	75P	75L	63L
6	34.8	17	C1.46	C1.47	C1.48	75P	75P	75Q	75M	75M
8	55.1	19	C1.46	C1.47	C1.48.1	75R	75R	75R	75P	75P
10	80.2	20	C1.70	C1.64	C1.75	125S	100S	125S	125Q	125Q
12	109	20	C1.73	C1.74	C1.75	125T	125T	125T	125R	125R
14	122	20	C1.73	C1.74	C1.75	125T	125T	125T	125S	125S

Fp = 1g Fpv = 0.38g			SOLID (RIGID) BRACING FOR 45° BRACE ANGLE MAXIMUM BRACE SPACING - OPTION #2							
			INSTALLATION DETAILS							
			SEISMIC BRACE			HANGER CONNECTION			BRACE CONNECTION	
PIPE SIZE	WEIGHT	SUPPORT SPACING	TRANS.	LONG.	ALL-DIR.	TRANS.	LONG.	ALL-DIR.	TRANS.	LONG./ALL-DIR.
(DIA.)	(PLF)	(FT)	30 FT*	30 FT*	30 FT*	BRACE	BRACE	BRACE	BRACE	BRACE
2	6.2	10	C1.10	C1.11	C1.12	38E	38E	38F	50D	50D
2.5	9.1	11	C1.20	C1.21	C1.22	50F	50F	50G	50E	50E
3	12.1	12	C1.20	C1.21	C1.22	50H	50H	50J	63F	50F
4	18.3	14	C1.30	C1.32	C1.34	63K	63K	63L	63G	63G
5	26.6	16	C1.41	C1.33	C1.45	75M	63M	75N	75J	63J
6	34.8	17	C1.41	C1.43	C1.45	75N	75N	75P	75L	75L
8	55.1	19	C1.46	C1.47	C1.48	75Q	75Q	75R	75N	75N
10	80.2	20	C1.46	C1.47	C1.48.1	75R	75R	75S	75P	75P
12	109	20	C1.70	C1.64	C1.75	125S	100S	125T	125Q	125Q
14	122	20	C1.70	C1.64	C1.75	125S	100S	125T	125R	125R
16	150	20	C1.73	C1.74	C1.75	125T	125T	125T	125R	125R

* - BRACE SPACING SHALL NOT EXCEED THOSE TABULATED IN SECTION S.

NOTE: INSTALLATION DETAILS TABULATED ABOVE ARE BASED ON USE OF THE MW-WPL SEISMIC ATTACHMENT TO STEEL PIPE. IF THE DESIGNER PREFERS TO USE THE MW-SPC, CALCULATE THE SEISMIC DEMAND AND COMPARE IT TO THE SEISMIC CAPACITY OF THE MW-SPC AS SHOWN IN SECTION C. IF THE DEMAND IS LESS THAN OR EQUAL TO THE CAPACITY, THE MW-SPC IS ACCEPTABLE.

REVIEWED FOR CODE COMPLIANCE
OPM-0043
Reviewed By: William Staehlin
Date: 01/23/2023
ACCEPTED
LA COUNTY DEPARTMENT OF PUBLIC WORKS
BUILDING CODE

MASON WEST
1601 E. Miraloma Ave. Placentia, CA 92870
TEL (714) 630 - 0701, www.masonwest.com

Jiefu "Jeff" Zhang, SE
California SE No. S5270

INDIVIDUALLY SUSPENDED STEEL PIPE

SEISMIC SOLID BRACING INSTALLATION REQUIREMENTS

LATERAL FORCE
Fp = 1.0g (ASD)
VERTICAL FORCE
Fpv = 0.375g (ASD)

Fp = 1g Fpv = 0.38g			SOLID (RIGID) BRACING FOR 45° BRACE ANGLE MAXIMUM BRACE SPACING - OPTION #3							
PIPE SIZE	WEIGHT	SUPPORT SPACING	INSTALLATION DETAILS							
			SEISMIC BRACE			HANGER CONNECTION			BRACE CONNECTION	
			TRANS.	LONG.	ALL-DIR.	TRANS.	LONG.	ALL-DIR.	TRANS.	LONG./ALL-DIR.
(DIA.)	(PLF)	(FT)	20 FT*	20 FT*	20 FT*	BRACE	BRACE	BRACE	BRACE	BRACE
2	6.2	10	C1.10	C1.11	C1.12	38D	38D	38E	50C	50C
2.5	9.1	11	C1.20	C1.21	C1.22	50E	50E	50F	50D	50D
3	12.1	12	C1.20	C1.21	C1.22	50G	50G	50G	50E	50E
4	18.3	14	C1.30	C1.32	C1.34	63J	63J	63K	63F	63F
5	26.6	16	C1.30	C1.32	C1.34	63L	63L	63M	63G	63G
6	34.8	17	C1.41	C1.43	C1.45	75M	75M	75N	75J	75J
8	55.1	19	C1.46	C1.47	C1.48	75Q	75Q	75Q	75L	75L
10	80.2	20	C1.46	C1.47	C1.48	75R	75R	75R	75N	75N
12	109	20	C1.46	C1.47	C1.48.1	75S	75S	75S	75P	75P
14	122	20	C1.46	C1.47	C1.48.1	75S	75S	75S	75Q	75Q
16	150	20	C1.63	C1.47	C1.72	100S	75S	125T	125Q	75Q
18	190	20	C1.70	C1.64	C1.75	125T	100T	125T	125R	125R

* - BRACE SPACING SHALL NOT EXCEED THOSE TABULATED IN SECTION S.

NOTE: INSTALLATION DETAILS TABULATED ABOVE ARE BASED ON USE OF THE MW-WPL SEISMIC ATTACHMENT TO STEEL PIPE. IF THE DESIGNER PREFERS TO USE THE MW-SPC, CALCULATE THE SEISMIC DEMAND AND COMPARE IT TO THE SEISMIC CAPACITY OF THE MW-SPC AS SHOWN IN SECTION C. IF THE DEMAND IS LESS THAN OR EQUAL TO THE CAPACITY, THE MW-SPC IS ACCEPTABLE.

REVIEWED FOR CODE COMPLIANCE
OPM-0043
BY: William Staehlin
DATE: 01/23/2023
CALIFORNIA BUILDING CODE, 2022

MASON WEST
1601 E. Miraloma Ave. Placentia, CA 92870
TEL (714) 630 - 0701, www.masonwest.com

Jiefu "Jeff" Zhang, SE
California SE No. S5270

PAGE
B1.2.1

INDIVIDUALLY SUSPENDED STEEL PIPE

SEISMIC CABLE BRACING INSTALLATION REQUIREMENTS

LATERAL FORCE
Fp = 0.25g (ASD)
VERTICAL FORCE
Fpv = 0.375g (ASD)

Fp = 0.25g Fpv = 0.38g			STANDARD CABLE BRACING FOR 45° BRACE ANGLE MAXIMUM BRACE SPACING - OPTION #1					
			INSTALLATION DETAILS					
			BRACE DIRECTION/SPACING			HANGER CONNECTION TYPE	BRACE CONNECTION	
PIPE SIZE	WEIGHT	SUPPORT SPACING	TRANS.	LONG.	ALL-DIR.		TRANS.	LONG./ALL-DIR.
(DIA.)	(PLF)	(FT)	40 FT*	80 FT*	80 FT*		BRACE	BRACE
2	6.2	10	C2.10	C2.11	C2.12	38B	38A	38C
2.5	9.1	11	C2.20	C2.21	C2.22	50C	50B	50D
3	12.1	12	C2.20	C2.21	C2.22	50D	50C	50E
4	18.3	14	C2.30	C2.31	C2.32	63F	50D	50F
5	26.6	16	C2.30	C2.31	C2.32	63H	50E	50G
6	34.8	17	C2.40	C2.41	C2.42	75J	63F	63J

Fp = 0.25g Fpv = 0.38g			STANDARD CABLE BRACING FOR 45° BRACE ANGLE MAXIMUM BRACE SPACING - OPTION #2					
			INSTALLATION DETAILS					
			BRACE DIRECTION/SPACING			HANGER CONNECTION TYPE	BRACE CONNECTION	
PIPE SIZE	WEIGHT	SUPPORT SPACING	TRANS.	LONG.	ALL-DIR.		TRANS.	LONG./ALL-DIR.
(DIA.)	(PLF)	(FT)	30 FT*	60 FT*	60 FT*		BRACE	BRACE
2	6.2	10	C2.10	C2.11	C2.12	38B	38A	38B
2.5	9.1	11	C2.20	C2.21	C2.22	50C	50A	50C
3	12.1	12	C2.20	C2.21	C2.22	50D	50B	50D
4	18.3	14	C2.30	C2.31	C2.32	63F	50C	50E
5	26.6	16	C2.30	C2.31	C2.32	63H	50D	50F
6	34.8	17	C2.40	C2.41	C2.42	75J	63E	63G
8	55.1	19	C2.40	C2.41	C2.42	75M	63F	63K

Fp = 0.25g Fpv = 0.38g			STANDARD CABLE BRACING FOR 45° BRACE ANGLE MAXIMUM BRACE SPACING - OPTION #3					
			INSTALLATION DETAILS					
			BRACE DIRECTION/SPACING			HANGER CONNECTION TYPE	BRACE CONNECTION	
PIPE SIZE	WEIGHT	SUPPORT SPACING	TRANS.	LONG.	ALL-DIR.		TRANS.	LONG./ALL-DIR.
(DIA.)	(PLF)	(FT)	20 FT*	20 FT*	20 FT*		BRACE	BRACE
2	6.2	10	C2.10	C2.11	C2.12	38B	38A	38A
2.5	9.1	11	C2.20	C2.21	C2.22	50C	50A	50A
3	12.1	12	C2.20	C2.21	C2.22	50D	50A	50A
4	18.3	14	C2.30	C2.31	C2.32	63F	50B	50B
5	26.6	16	C2.30	C2.31	C2.32	63H	50C	50C
6	34.8	17	C2.40	C2.41	C2.42	75J	63D	63D
8	55.1	19	C2.40	C2.41	C2.42	75M	63E	63E
10	80.2	20	C2.50	C2.51	C2.52	88P	63F	63F
12	109	20	C2.50	C2.51	C2.52	88Q	63G	63G

* - BRACE SPACING SHALL NOT EXCEED THOSE TABULATED IN SECTION S.

NOTE: INSTALLATION DETAILS TABULATED ABOVE ARE BASED ON USE OF THE MW-WPL SEISMIC ATTACHMENT TO STEEL PIPE. IF THE DESIGNER PREFERS TO USE THE MW-SPC, CALCULATE THE SEISMIC DEMAND AND COMPARE IT TO THE SEISMIC CAPACITY OF THE MW-SPC AS SHOWN IN SECTION C. IF THE DEMAND IS LESS THAN OR EQUAL TO THE CAPACITY, THE MW-SPC IS ACCEPTABLE.

REVIEWED FOR CODE COMPLIANCE
OPM-0043
BY: William Staehlin
DATE: 01/23/2023
CALIFORNIA BUILDING CODE, 2022

MASON WEST
1601 E. Miraloma Ave. Placentia, CA 92870
TEL (714) 630 - 0701, www.masonwest.com

Jiefu "Jeff" Zhang, SE
California SE No. S5270

INDIVIDUALLY SUSPENDED STEEL PIPE

SEISMIC CABLE BRACING INSTALLATION REQUIREMENTS

LATERAL FORCE
Fp = 0.5g (ASD)
VERTICAL FORCE
Fpv = 0.375g (ASD)

Fp = 0.5g
Fpv = 0.38g

STANDARD CABLE BRACING FOR 45° BRACE ANGLE
MAXIMUM BRACE SPACING - OPTION #1

PIPE SIZE	WEIGHT	SUPPORT SPACING	INSTALLATION DETAILS					
			BRACE DIRECTION/SPACING			HANGER CONNECTION TYPE	BRACE CONNECTION	
			TRANS.	LONG.	ALL-DIR.		TRANS.	LONG./ALL-DIR.
(DIA.)	(PLF)	(FT)	30 FT*	60 FT*	60 FT*		BRACE	BRACE
2	6.2	10	C2.10	C2.11	C2.12	38B	38B	38D
2.5	9.1	11	C2.20	C2.21	C2.22	50C	50C	50E
3	12.1	12	C2.20	C2.21	C2.22	50D	50D	50F
4	18.3	14	C2.30	C2.41	C2.42	63F	50E	63G
5	26.6	16	C2.30	C2.41	C2.42	63H	50F	63J

Fp = 0.5g
Fpv = 0.38g

STANDARD CABLE BRACING FOR 45° BRACE ANGLE
MAXIMUM BRACE SPACING - OPTION #2

PIPE SIZE	WEIGHT	SUPPORT SPACING	INSTALLATION DETAILS					
			BRACE DIRECTION/SPACING			HANGER CONNECTION TYPE	BRACE CONNECTION	
			TRANS.	LONG.	ALL-DIR.		TRANS.	LONG./ALL-DIR.
(DIA.)	(PLF)	(FT)	20 FT*	30 FT*	30 FT*		BRACE	BRACE
2	6.2	10	C2.10	C2.11	C2.12	38B	38A	38B
2.5	9.1	11	C2.20	C2.21	C2.22	50C	50B	50C
3	12.1	12	C2.20	C2.21	C2.22	50D	50C	50D
4	18.3	14	C2.30	C2.31	C2.32	63F	50D	50E
5	26.6	16	C2.30	C2.31	C2.32	63H	50E	50F
6	34.8	17	C2.40	C2.41	C2.42	75J	63F	63G
8	55.1	19	C2.40	C2.41	C2.42	75M	63G	63K

Fp = 0.5g
Fpv = 0.38g

STANDARD CABLE BRACING FOR 45° BRACE ANGLE
MAXIMUM BRACE SPACING - OPTION #3

PIPE SIZE	WEIGHT	SUPPORT SPACING	INSTALLATION DETAILS					
			BRACE DIRECTION/SPACING			HANGER CONNECTION TYPE	BRACE CONNECTION	
			TRANS.	LONG.	ALL-DIR.		TRANS.	LONG./ALL-DIR.
(DIA.)	(PLF)	(FT)	10 FT*	20 FT*	20 FT*		BRACE	BRACE
2	6.2	10	C2.10	C2.11	C2.12	38B	38A	38A
2.5	9.1	11	C2.20	C2.21	C2.22	50C	50A	50B
3	12.1	12	C2.20	C2.21	C2.22	50D	50A	50C
4	18.3	14	C2.30	C2.31	C2.32	63F	50B	50D
5	26.6	16	C2.30	C2.31	C2.32	63H	50C	50E
6	34.8	17	C2.40	C2.41	C2.42	75J	63D	63F
8	55.1	19	C2.40	C2.41	C2.42	75M	63E	63G
10	80.2	20	C2.50	C2.51	C2.52	88P	63F	63J

* - BRACE SPACING SHALL NOT EXCEED THOSE TABULATED IN SECTION S.

NOTE: INSTALLATION DETAILS TABULATED ABOVE ARE BASED ON USE OF THE MW-WPL SEISMIC ATTACHMENT TO STEEL PIPE. IF THE DESIGNER PREFERS TO USE THE MW-SPC, CALCULATE THE SEISMIC DEMAND AND COMPARE IT TO THE SEISMIC CAPACITY OF THE MW-SPC AS SHOWN IN SECTION C. IF THE DEMAND IS LESS THAN OR EQUAL TO THE CAPACITY, THE MW-SPC IS ACCEPTABLE.

REVIEWED FOR CODE COMPLIANCE
ICC-ES
OPM-0043
BY: William Staehlin
DATE: 1/23/2023
CALIFORNIA BUILDING CODE 2022

MASON WEST
1601 E. Miraloma Ave. Placentia, CA 92870
TEL (714) 630 - 0701, www.masonwest.com

Jiefu "Jeff" Zhang, SE
California SE No. S5270

INDIVIDUALLY SUSPENDED STEEL PIPE

SEISMIC CABLE BRACING INSTALLATION REQUIREMENTS

LATERAL FORCE
Fp = 1.0g (ASD)
VERTICAL FORCE
Fpv = 0.375g (ASD)

Fp = 1g Fpv = 0.38g			STANDARD CABLE BRACING FOR 45° BRACE ANGLE MAXIMUM BRACE SPACING - OPTION #1					
PIPE SIZE	WEIGHT	SUPPORT SPACING	INSTALLATION DETAILS					
			BRACE DIRECTION/SPACING			HANGER CONNECTION TYPE	BRACE CONNECTION	
			TRANS.	LONG.	ALL-DIR.		TRANS.	LONG./ALL-DIR.
(DIA.)	(PLF)	(FT)	40 FT*	40 FT*	40 FT*		BRACE	BRACE
2	6.2	10	C2.10	C2.11	C2.12	38B	38E	38E
2.5	9.1	11	C2.20	C2.21	C2.22	50C	50F	50F
3	12.1	12	C2.30	C2.21	C2.22	63D	50G	50G
4	18.3	14	C2.40	C2.41	C2.42	75F	63J	63J

Fp = 1g Fpv = 0.38g			STANDARD CABLE BRACING FOR 45° BRACE ANGLE MAXIMUM BRACE SPACING - OPTION #2					
PIPE SIZE	WEIGHT	SUPPORT SPACING	INSTALLATION DETAILS					
			BRACE DIRECTION/SPACING			HANGER CONNECTION TYPE	BRACE CONNECTION	
			TRANS.	LONG.	ALL-DIR.		TRANS.	LONG./ALL-DIR.
(DIA.)	(PLF)	(FT)	30 FT*	30 FT*	30 FT*		BRACE	BRACE
2	6.2	10	C2.10	C2.11	C2.12	38B	38D	38D
2.5	9.1	11	C2.20	C2.21	C2.22	50C	50E	50E
3	12.1	12	C2.20	C2.21	C2.22	50D	50F	50F
4	18.3	14	C2.40	C2.41	C2.42	75F	63G	63G
5	26.6	16	C2.40	C2.41	C2.42	75H	63J	63J

Fp = 1g Fpv = 0.38g			STANDARD CABLE BRACING FOR 45° BRACE ANGLE MAXIMUM BRACE SPACING - OPTION #3					
PIPE SIZE	WEIGHT	SUPPORT SPACING	INSTALLATION DETAILS					
			BRACE DIRECTION/SPACING			HANGER CONNECTION TYPE	BRACE CONNECTION	
			TRANS.	LONG.	ALL-DIR.		TRANS.	LONG./ALL-DIR.
(DIA.)	(PLF)	(FT)	20 FT*	20 FT*	20 FT*		BRACE	BRACE
2	6.2	10	C2.10	C2.11	C2.12	38B	38C	38C
2.5	9.1	11	C2.20	C2.21	C2.22	50C	50D	50D
3	12.1	12	C2.20	C2.21	C2.22	50D	50E	50E
4	18.3	14	C2.30	C2.31	C2.32	63F	50F	50F
5	26.6	16	C2.30	C2.31	C2.32	63H	50G	50G
6	34.8	17	C2.40	C2.41	C2.42	75J	63J	63J

* - BRACE SPACING SHALL NOT EXCEED THOSE TABULATED IN SECTION S.

NOTE: INSTALLATION DETAILS TABULATED ABOVE ARE BASED ON USE OF THE MW-WPL SEISMIC ATTACHMENT TO STEEL PIPE. IF THE DESIGNER PREFERS TO USE THE MW-SPC, CALCULATE THE SEISMIC DEMAND AND COMPARE IT TO THE SEISMIC CAPACITY OF THE MW-SPC AS SHOWN IN SECTION C. IF THE DEMAND IS LESS THAN OR EQUAL TO THE CAPACITY, THE MW-SPC IS ACCEPTABLE.

HCAI APPROVED FOR CODE COMPLIANCE OPM 0043 BY: William Staehlin DATE: 01/23/2023 CALIFORNIA BUILDING CODE 2022

MASON WEST
1601 E. Miraloma Ave. Placentia, CA 92870
TEL (714) 630 - 0701, www.masonwest.com

Jiefu "Jeff" Zhang, SE
California SE No. S5270

INDIVIDUALLY SUSPENDED CAST IRON PIPE

SEISMIC SOLID BRACING INSTALLATION REQUIREMENTS

LATERAL FORCE
Fp = 0.25g (ASD)
VERTICAL FORCE
Fpv = 0.375g (ASD)

Fp = 0.25g
Fpv = 0.38g

SOLID (RIGID) BRACING FOR 45° BRACE ANGLE
MAXIMUM BRACE SPACING - OPTION #1

PIPE SIZE	WEIGHT	SUPPORT SPACING	INSTALLATION DETAILS							
			SEISMIC BRACE			HANGER CONNECTION			BRACE CONNECTION	
			TRANS.	LONG.	ALL-DIR.	TRANS.	LONG.	ALL-DIR.	TRANS.	LONG./ALL-DIR.
(DIA.)	(PLF)	(FT)	40 FT*	80 FT*	80 FT*	BRACE	BRACE	BRACE	BRACE	BRACE
2	5.1	8	C1.10	C1.11	C1.12	38B	38C	38D	50A	50B
3	8.4	8	C1.20	C1.21	C1.22	50D	50E	50E	50B	50D
4	13	8	C1.30	C1.32	C1.34	63E	63F	63G	63C	63E
5	18	8	C1.30	C1.32	C1.34	63F	63G	63J	63D	63F
6	23.4	8	C1.40	C1.51	C1.52	75K	88J	88K	63D	63G

Fp = 0.25g
Fpv = 0.38g

SOLID (RIGID) BRACING FOR 45° BRACE ANGLE
MAXIMUM BRACE SPACING - OPTION #2

PIPE SIZE	WEIGHT	SUPPORT SPACING	INSTALLATION DETAILS							
			SEISMIC BRACE			HANGER CONNECTION			BRACE CONNECTION	
			TRANS.	LONG.	ALL-DIR.	TRANS.	LONG.	ALL-DIR.	TRANS.	LONG./ALL-DIR.
(DIA.)	(PLF)	(FT)	30 FT*	60 FT*	60 FT*	BRACE	BRACE	BRACE	BRACE	BRACE
2	5.1	8	C1.10	C1.11	C1.12	38B	38C	38C	50A	50B
3	8.4	8	C1.20	C1.21	C1.22	50C	50D	50E	50A	50C
4	13	8	C1.30	C1.32	C1.34	63D	63E	63F	63B	63D
5	18	8	C1.30	C1.32	C1.34	63E	63G	63H	63C	63E
6	23.4	8	C1.40	C1.51	C1.52	75F	88H	88J	63D	63F
8	40.2	8	C1.40	C1.42	C1.44	75J	75L	75M	63E	63H

Fp = 0.25g
Fpv = 0.38g

SOLID (RIGID) BRACING FOR 45° BRACE ANGLE
MAXIMUM BRACE SPACING - OPTION #3

PIPE SIZE	WEIGHT	SUPPORT SPACING	INSTALLATION DETAILS							
			SEISMIC BRACE			HANGER CONNECTION			BRACE CONNECTION	
			TRANS.	LONG.	ALL-DIR.	TRANS.	LONG.	ALL-DIR.	TRANS.	LONG./ALL-DIR.
(DIA.)	(PLF)	(FT)	20 FT*	20 FT*	20 FT*	BRACE	BRACE	BRACE	BRACE	BRACE
2	5.1	8	C1.10	C1.11	C1.12	38B	38B	38B	50A	50A
3	8.4	8	C1.20	C1.21	C1.22	50C	50C	50C	50A	50A
4	13	8	C1.30	C1.32	C1.34	63D	63D	63D	63A	63A
5	18	8	C1.30	C1.32	C1.34	63E	63E	63E	63B	63B
6	23.4	8	C1.40	C1.51	C1.52	75F	88F	88F	63B	63B
8	40.2	8	C1.40	C1.51	C1.52	75H	88H	88J	63D	63D
10	60.8	8	C1.50	C1.51	C1.52	88K	88K	88L	63E	63E

*** - BRACE SPACING SHALL NOT EXCEED THOSE TABULATED IN SECTION S.**

REVIEWED FOR CODE COMPLIANCE
BY: WILLIAM STAEHLIN
DATE: 01/23/2023
OPM-0043

MASON WEST
1601 E. Miraloma Ave. Placentia, CA 92870
TEL (714) 630 - 0701, www.masonwest.com

Jiefu "Jeff" Zhang, SE
California SE No. S5270

PAGE
B1.6

INDIVIDUALLY SUSPENDED CAST IRON PIPE	SEISMIC SOLID BRACING INSTALLATION REQUIREMENTS	LATERAL FORCE Fp = 0.5g (ASD) VERTICAL FORCE Fpv = 0.375g (ASD)

Fp = 0.5g
Fpv = 0.38g

SOLID (RIGID) BRACING FOR 45° BRACE ANGLE
MAXIMUM BRACE SPACING - OPTION #1

PIPE SIZE	WEIGHT	SUPPORT SPACING	INSTALLATION DETAILS							
			SEISMIC BRACE			HANGER CONNECTION			BRACE CONNECTION	
			TRANS.	LONG.	ALL-DIR.	TRANS.	LONG.	ALL-DIR.	TRANS.	LONG./ALL-DIR.
(DIA.)	(PLF)	(FT)	30 FT*	60 FT*	60 FT*	BRACE	BRACE	BRACE	BRACE	BRACE
2	5.1	8	C1.20	C1.11	C1.12	50C	38D	38E	50B	50C
3	8.4	8	C1.20	C1.21	C1.22	50D	50F	50G	50C	50E
4	13	8	C1.30	C1.32	C1.34	63E	63G	63J	63D	63F
5	18	8	C1.30	C1.32	C1.34	63G	63J	63K	63E	63G

Fp = 0.5g
Fpv = 0.38g

SOLID (RIGID) BRACING FOR 45° BRACE ANGLE
MAXIMUM BRACE SPACING - OPTION #2

PIPE SIZE	WEIGHT	SUPPORT SPACING	INSTALLATION DETAILS							
			SEISMIC BRACE			HANGER CONNECTION			BRACE CONNECTION	
			TRANS.	LONG.	ALL-DIR.	TRANS.	LONG.	ALL-DIR.	TRANS.	LONG./ALL-DIR.
(DIA.)	(PLF)	(FT)	20 FT*	30 FT*	30 FT*	BRACE	BRACE	BRACE	BRACE	BRACE
2	5.1	8	C1.10	C1.11	C1.12	38B	38C	38C	50A	50B
3	8.4	8	C1.20	C1.21	C1.22	50D	50D	50E	50B	50C
4	13	8	C1.30	C1.32	C1.34	63E	63E	63F	63C	63D
5	18	8	C1.30	C1.32	C1.34	63F	63G	63H	63D	63E
6	23.4	8	C1.40	C1.51	C1.52	75G	88H	88J	63D	63F

Fp = 0.5g
Fpv = 0.38g

SOLID (RIGID) BRACING FOR 45° BRACE ANGLE
MAXIMUM BRACE SPACING - OPTION #3

PIPE SIZE	WEIGHT	SUPPORT SPACING	INSTALLATION DETAILS							
			SEISMIC BRACE			HANGER CONNECTION			BRACE CONNECTION	
			TRANS.	LONG.	ALL-DIR.	TRANS.	LONG.	ALL-DIR.	TRANS.	LONG./ALL-DIR.
(DIA.)	(PLF)	(FT)	10 FT*	20 FT*	20 FT*	BRACE	BRACE	BRACE	BRACE	BRACE
2	5.1	8	C1.10	C1.11	C1.12	38B	38B	38C	50A	50A
3	8.4	8	C1.20	C1.21	C1.22	50C	50D	50D	50A	50B
4	13	8	C1.30	C1.32	C1.34	63D	63E	63E	63A	63C
5	18	8	C1.30	C1.32	C1.34	63E	63F	63G	63B	63D
6	23.4	8	C1.40	C1.51	C1.52	75F	88G	88H	63B	63D
8	40.2	8	C1.40	C1.51	C1.52	75H	88K	88L	63D	63F
10	60.8	8	C1.50	C1.42	C1.44	88K	75M	75M	63E	63H

*** - BRACE SPACING SHALL NOT EXCEED THOSE TABULATED IN SECTION S.**

REVIEWED FOR CODE COMPLIANCE
OPM-0043
BY: William Staehlin
DATE: 01/23/2023
LA COUNTY BUILDING CODE

MASON WEST
1601 E. Miraloma Ave. Placentia, CA 92870
TEL (714) 630 - 0701, www.masonwest.com

Jiefu "Jeff" Zhang, SE
California SE No. S5270

INDIVIDUALLY SUSPENDED CAST IRON PIPE	SEISMIC SOLID BRACING INSTALLATION REQUIREMENTS	LATERAL FORCE Fp = 1.0g (ASD) VERTICAL FORCE Fpv = 0.375g (ASD)

Fp = 1g Fpv = 0.38g			SOLID (RIGID) BRACING FOR 45° BRACE ANGLE MAXIMUM BRACE SPACING - OPTION #1							
			INSTALLATION DETAILS							
PIPE SIZE	WEIGHT	SUPPORT SPACING	SEISMIC BRACE			HANGER CONNECTION			BRACE CONNECTION	
			TRANS.	LONG.	ALL-DIR.	TRANS.	LONG.	ALL-DIR.	TRANS.	LONG./ALL-DIR.
(DIA.)	(PLF)	(FT)	40 FT*	40 FT*	40 FT*	BRACE	BRACE	BRACE	BRACE	BRACE
2	5.1	8	C1.20	C1.11	C1.12	50C	38E	38F	50D	50D
3	8.4	8	C1.40	C1.21	C1.22	75F	50F	50H	63E	50E

Fp = 1g Fpv = 0.38g			SOLID (RIGID) BRACING FOR 45° BRACE ANGLE MAXIMUM BRACE SPACING - OPTION #2							
			INSTALLATION DETAILS							
PIPE SIZE	WEIGHT	SUPPORT SPACING	SEISMIC BRACE			HANGER CONNECTION			BRACE CONNECTION	
			TRANS.	LONG.	ALL-DIR.	TRANS.	LONG.	ALL-DIR.	TRANS.	LONG./ALL-DIR.
(DIA.)	(PLF)	(FT)	30 FT*	30 FT*	30 FT*	BRACE	BRACE	BRACE	BRACE	BRACE
2	5.1	8	C1.20	C1.11	C1.12	50D	38D	38E	50C	50C
3	8.4	8	C1.30	C1.21	C1.22	63F	50F	50G	63E	50E

Fp = 1g Fpv = 0.38g			SOLID (RIGID) BRACING FOR 45° BRACE ANGLE MAXIMUM BRACE SPACING - OPTION #3							
			INSTALLATION DETAILS							
PIPE SIZE	WEIGHT	SUPPORT SPACING	SEISMIC BRACE			HANGER CONNECTION			BRACE CONNECTION	
			TRANS.	LONG.	ALL-DIR.	TRANS.	LONG.	ALL-DIR.	TRANS.	LONG./ALL-DIR.
(DIA.)	(PLF)	(FT)	20 FT*	20 FT*	20 FT*	BRACE	BRACE	BRACE	BRACE	BRACE
2	5.1	8	C1.20	C1.11	C1.12	50C	38C	38D	50B	50B
3	8.4	8	C1.20	C1.21	C1.22	50E	50E	50E	50C	50C
4	13	8	C1.30	C1.32	C1.34	63F	63F	63G	63E	63E
5	18	8	C1.40	C1.32	C1.34	75G	63G	63J	63F	63F

* - BRACE SPACING SHALL NOT EXCEED THOSE TABULATED IN SECTION S.

REVIEWED FOR CODE COMPLIANCE
OPM-0043
BY: William Staehlin
DATE: 11/23/2022
CALIFORNIA BUILDING CODE, 2022

MASON WEST
1601 E. Miraloma Ave. Placentia, CA 92870
TEL (714) 630 - 0701, www.masonwest.com

Jiefu "Jeff" Zhang, SE
California SE No. S5270

PAGE
B1.8

INDIVIDUALLY SUSPENDED CAST IRON PIPE

SEISMIC CABLE BRACING INSTALLATION REQUIREMENTS

LATERAL FORCE
Fp = 0.25g (ASD)
VERTICAL FORCE
Fpv = 0.375g (ASD)

Fp = 0.25g Fpv = 0.38g			STANDARD CABLE BRACING FOR 45° BRACE ANGLE MAXIMUM BRACE SPACING - OPTION #1					
			INSTALLATION DETAILS					
PIPE SIZE	WEIGHT	SUPPORT SPACING	BRACE DIRECTION/SPACING			HANGER CONNECTION TYPE	BRACE CONNECTION	
			TRANS.	LONG.	ALL-DIR.		TRANS.	LONG./ALL-DIR.
(DIA.)	(PLF)	(FT)	40 FT*	80 FT*	80 FT*		BRACE	BRACE
2	5.1	8	C2.10	C2.11	C2.12	38A	38A	38B
3	8.4	8	C2.20	C2.21	C2.22	50B	50B	50C
4	13	8	C2.30	C2.31	C2.32	63C	50C	50E
5	18	8	C2.30	C2.31	C2.32	63D	50D	50F
6	23.4	8	C2.40	C2.41	C2.42	75E	63D	63G

Fp = 0.25g Fpv = 0.38g			STANDARD CABLE BRACING FOR 45° BRACE ANGLE MAXIMUM BRACE SPACING - OPTION #2					
			INSTALLATION DETAILS					
PIPE SIZE	WEIGHT	SUPPORT SPACING	BRACE DIRECTION/SPACING			HANGER CONNECTION TYPE	BRACE CONNECTION	
			TRANS.	LONG.	ALL-DIR.		TRANS.	LONG./ALL-DIR.
(DIA.)	(PLF)	(FT)	30 FT*	60 FT*	60 FT*		BRACE	BRACE
2	5.1	8	C2.10	C2.11	C2.12	38A	38A	38B
3	8.4	8	C2.20	C2.21	C2.22	50B	50A	50C
4	13	8	C2.30	C2.31	C2.32	63C	50B	50D
5	18	8	C2.30	C2.31	C2.32	63D	50C	50E
6	23.4	8	C2.40	C2.41	C2.42	75E	63D	63F
8	40.2	8	C2.40	C2.41	C2.42	75F	63E	63H

Fp = 0.25g Fpv = 0.38g			STANDARD CABLE BRACING FOR 45° BRACE ANGLE MAXIMUM BRACE SPACING - OPTION #3					
			INSTALLATION DETAILS					
PIPE SIZE	WEIGHT	SUPPORT SPACING	BRACE DIRECTION/SPACING			HANGER CONNECTION TYPE	BRACE CONNECTION	
			TRANS.	LONG.	ALL-DIR.		TRANS.	LONG./ALL-DIR.
(DIA.)	(PLF)	(FT)	20 FT*	20 FT*	20 FT*		BRACE	BRACE
2	5.1	8	C2.10	C2.11	C2.12	38A	38A	38A
3	8.4	8	C2.20	C2.21	C2.22	50B	50A	50A
4	13	8	C2.30	C2.31	C2.32	63C	50A	50A
5	18	8	C2.30	C2.31	C2.32	63D	50B	50B
6	23.4	8	C2.40	C2.41	C2.42	75E	63B	63B
8	40.2	8	C2.40	C2.41	C2.42	75F	63D	63D
10	60.8	8	C2.40	C2.41	C2.42	75H	63E	63E

* - BRACE SPACING SHALL NOT EXCEED THOSE TABULATED IN SECTION S.

REVIEWED FOR CODE COMPLIANCE
BY: William Staehlin
DATE: 01/23/2023
CALIFORNIA BUILDING CODE, 2022

MASON WEST
1601 E. Miraloma Ave. Placentia, CA 92870
TEL (714) 630 - 0701, www.masonwest.com

Jiefu "Jeff" Zhang, SE
California SE No. S5270

PAGE
B1.9

1/23/2023 OPM-0043: Reviewed for Code Compliance by William Staehlin 179 of 792

INDIVIDUALLY SUSPENDED CAST IRON PIPE

SEISMIC CABLE BRACING INSTALLATION REQUIREMENTS

LATERAL FORCE
Fp = 0.5g (ASD)
VERTICAL FORCE
Fpv = 0.375g (ASD)

Fp = 0.5g
Fpv = 0.38g

STANDARD CABLE BRACING FOR 45° BRACE ANGLE
MAXIMUM BRACE SPACING - OPTION #1

PIPE SIZE (DIA.)	WEIGHT (PLF)	SUPPORT SPACING (FT)	INSTALLATION DETAILS: BRACE DIRECTION/SPACING TRANS. 30 FT*	LONG. 60 FT*	ALL-DIR. 60 FT*	HANGER CONNECTION TYPE	BRACE CONNECTION TRANS. BRACE	LONG./ALL-DIR. BRACE
2	5.1	8	C2.20	C2.11	C2.12	50A	50B	38C
3	8.4	8	C2.20	C2.21	C2.22	50B	50C	50E
4	13	8	C2.30	C2.31	C2.32	63C	50D	50F
5	18	8	C2.30	C2.31	C2.32	63D	50E	50G
6	23.4	8	C2.40	C2.41	C2.42	75E	63F	63J

Fp = 0.5g
Fpv = 0.38g

STANDARD CABLE BRACING FOR 45° BRACE ANGLE
MAXIMUM BRACE SPACING - OPTION #2

PIPE SIZE (DIA.)	WEIGHT (PLF)	SUPPORT SPACING (FT)	INSTALLATION DETAILS: BRACE DIRECTION/SPACING TRANS. 20 FT*	LONG. 30 FT*	ALL-DIR. 30 FT*	HANGER CONNECTION TYPE	BRACE CONNECTION TRANS. BRACE	LONG./ALL-DIR. BRACE
2	5.1	8	C2.10	C2.11	C2.12	38A	38A	38B
3	8.4	8	C2.20	C2.21	C2.22	50B	50B	50C
4	13	8	C2.30	C2.31	C2.32	63C	50C	50D
5	18	8	C2.30	C2.31	C2.32	63D	50D	50E
6	23.4	8	C2.40	C2.41	C2.42	75E	63D	63F

Fp = 0.5g
Fpv = 0.38g

STANDARD CABLE BRACING FOR 45° BRACE ANGLE
MAXIMUM BRACE SPACING - OPTION #3

PIPE SIZE (DIA.)	WEIGHT (PLF)	SUPPORT SPACING (FT)	INSTALLATION DETAILS: BRACE DIRECTION/SPACING TRANS. 10 FT*	LONG. 20 FT*	ALL-DIR. 20 FT*	HANGER CONNECTION TYPE	BRACE CONNECTION TRANS. BRACE	LONG./ALL-DIR. BRACE
2	5.1	8	C2.10	C2.11	C2.12	38A	38A	38A
3	8.4	8	C2.20	C2.21	C2.22	50B	50A	50B
4	13	8	C2.30	C2.31	C2.32	63C	50A	50C
5	18	8	C2.30	C2.31	C2.32	63D	50B	50D
6	23.4	8	C2.40	C2.41	C2.42	75E	63B	63D
8	40.2	8	C2.40	C2.41	C2.42	75F	63D	63F
10	60.8	8	C2.40	C2.41	C2.42	75H	63E	63E

* - BRACE SPACING SHALL NOT EXCEED THOSE TABULATED IN SECTION S.

REVIEWED FOR CODE COMPLIANCE
OPM-0043
BY: William Staehlin
DATE: 01/23/2023
FORM BUILDER CODE

MASON WEST
1601 E. Miraloma Ave. Placentia, CA 92870
TEL (714) 630 - 0701, www.masonwest.com

Jiefu "Jeff" Zhang, SE
California SE No. S5270

INDIVIDUALLY SUSPENDED CAST IRON PIPE

SEISMIC CABLE BRACING INSTALLATION REQUIREMENTS

LATERAL FORCE
Fp = 1.0g (ASD)
VERTICAL FORCE
Fpv = 0.375g (ASD)

Fp = 1g Fpv = 0.38g			STANDARD CABLE BRACING FOR 45° BRACE ANGLE MAXIMUM BRACE SPACING - OPTION #1					
			INSTALLATION DETAILS					
			BRACE DIRECTION/SPACING			HANGER CONNECTION TYPE	BRACE CONNECTION	
PIPE SIZE	WEIGHT	SUPPORT SPACING	TRANS.	LONG.	ALL-DIR.		TRANS.	LONG./ALL-DIR.
(DIA.)	(PLF)	(FT)	40 FT*	40 FT*	40 FT*		BRACE	BRACE
2	5.1	8	C2.20	C2.11	C2.12	50A	50D	38D
3	8.4	8	C2.40	C2.21	C2.22	75B	63E	50E

Fp = 1g Fpv = 0.38g			STANDARD CABLE BRACING FOR 45° BRACE ANGLE MAXIMUM BRACE SPACING - OPTION #2					
			INSTALLATION DETAILS					
			BRACE DIRECTION/SPACING			HANGER CONNECTION TYPE	BRACE CONNECTION	
PIPE SIZE	WEIGHT	SUPPORT SPACING	TRANS.	LONG.	ALL-DIR.		TRANS.	LONG./ALL-DIR.
(DIA.)	(PLF)	(FT)	30 FT*	30 FT*	30 FT*		BRACE	BRACE
2	5.1	8	C2.20	C2.11	C2.12	50A	50C	38C
3	8.4	8	C2.30	C2.21	C2.22	63B	50E	50E

Fp = 1g Fpv = 0.38g			STANDARD CABLE BRACING FOR 45° BRACE ANGLE MAXIMUM BRACE SPACING - OPTION #3					
			INSTALLATION DETAILS					
			BRACE DIRECTION/SPACING			HANGER CONNECTION TYPE	BRACE CONNECTION	
PIPE SIZE	WEIGHT	SUPPORT SPACING	TRANS.	LONG.	ALL-DIR.		TRANS.	LONG./ALL-DIR.
(DIA.)	(PLF)	(FT)	20 FT*	20 FT*	20 FT*		BRACE	BRACE
2	5.1	8	C2.20	C2.11	C2.12	50A	50B	38B
3	8.4	8	C2.20	C2.21	C2.22	50B	50C	50C
4	13	8	C2.30	C2.31	C2.32	63C	50E	50E
5	18	8	C2.40	C2.31	C2.32	75D	63F	50F

* - BRACE SPACING SHALL NOT EXCEED THOSE TABULATED IN SECTION S.

REVIEWED FOR CODE COMPLIANCE
OPM-0043
BY: William Staehlin
DATE: 1/23/2023
CALIFORNIA BUILDING CODE, 2022

MASON WEST
1601 E. Miraloma Ave. Placentia, CA 92870
TEL (714) 630 - 0701, www.masonwest.com

Jiefu "Jeff" Zhang, SE
California SE No. S5270

PAGE
B1.11

PIPING/CONDUIT ON TRAPEZE	SEISMIC SOLID BRACING INSTALLATION REQUIREMENTS	LATERAL FORCE Fp = 0.25g (ASD) VERTICAL FORCE Fpv = 0.375g (ASD)

Fp = 0.25g Fpv = 0.375g		SOLID (RIGID) BRACING FOR 458BRACE ANGLE BRACE SPACING - OPTION #1					
PIPING/CONDUIT SUPPORT AT 10'-0" MAX.		INSTALLATION DETAILS					
		BRACE DIRECTION/SPACING			HANGER ATTACHMENT TYPE		BRACE ATTACHMENT TYPE
		TRANS. 40 FT	LONG. 80 FT	ALL-DIR. 80 FT	TRANS./LONG. BRACE LOCATION	ALL-DIR. BRACE LOCATION	
PIPING/CONDUIT WEIGHT (LBS/FT)	10	F1.10	F1.11	F1.12	38D	38F	50B
	20	F1.10	F1.11	F1.12	38F	38J	50D
	30	F1.10	F1.11	F1.12	38G	38L	50E
	40	F1.20	F1.21	F1.22	50J	50M	50F
	50	F1.20	F1.21	F1.22	50K	50N	50G
	60	F1.30	F1.31	F1.32	63L	63P	63H
	70	F1.33	F1.34	F1.35	63M	63Q	63J
	80	F1.33	F1.34	F1.45	63M	75Q	63J
	90	F1.33	F1.34	F1.45	63N	75Q	63K
	100	F1.33	F1.34	F1.45	63N	75R	63L
	150	F1.50	F1.51	F1.52	75Q	75S	75M
	200	F1.50	F1.51	F1.52	75R	75S	75P
	300	F1.50	F1.51		75S		75Q
	400	F1.70	F1.71		125T		125R
	500	F1.73	F1.74		125T		125S

Fp = 0.25g Fpv = 0.375g		SOLID (RIGID) BRACING FOR 458BRACE ANGLE BRACE SPACING - OPTION #2					
PIPING/CONDUIT SUPPORT AT 10'-0" MAX.		INSTALLATION DETAILS					
		BRACE DIRECTION/SPACING			HANGER ATTACHMENT TYPE		BRACE ATTACHMENT TYPE
		TRANS. 30 FT	LONG. 60 FT	ALL-DIR. 60 FT	TRANS./LONG. BRACE LOCATION	ALL-DIR. BRACE LOCATION	
PIPING/CONDUIT WEIGHT (LBS/FT)	10	F1.10	F1.11	F1.12	38C	38E	50B
	20	F1.10	F1.11	F1.12	38E	38H	50C
	30	F1.10	F1.11	F1.12	38G	38K	50D
	40	F1.20	F1.21	F1.22	50H	50L	50E
	50	F1.20	F1.21	F1.22	50J	50M	50F
	60	F1.20	F1.21	F1.22	50K	50N	50G
	70	F1.30	F1.31	F1.32	63L	63P	63G
	80	F1.30	F1.31	F1.32	63M	63P	63H
	90	F1.33	F1.34	F1.35	63M	63Q	63H
	100	F1.33	F1.34	F1.45	63N	75Q	63J
	150	F1.50	F1.51	F1.52	75P	75R	75L
	200	F1.50	F1.51	F1.52	75Q	75S	75M
	300	F1.50	F1.51	F1.55	75R	75T	75P
	400	F1.60	F1.61		100S		125Q
	500	F1.60	F1.61		100T		125R

REVIEWED FOR CODE COMPLIANCE
HCAI
OPM-0043
BY: William Staehlin
DATE: 01/23/2023
CALIFORNIA BUILDING CODE 2022

MASON WEST
1601 E. Miraloma Ave. Placentia, CA 92870
TEL (714) 630 - 0701, www.masonwest.com

Jiefu "Jeff" Zhang, SE
California SE No. S5270

PAGE
B1.12

1/23/2023 OPM-0043: Reviewed for Code Compliance by William Staehlin 182 of 792

PIPING/CONDUIT ON TRAPEZE

SEISMIC SOLID BRACING INSTALLATION REQUIREMENTS

LATERAL FORCE
Fp = 0.25g (ASD)
VERTICAL FORCE
Fpv = 0.375g (ASD)

Fp = 0.25g Fpv = 0.375g		SOLID (RIGID) BRACING FOR 458BRACE ANGLE BRACE SPACING - OPTION #3					
		INSTALLATION DETAILS					
PIPING/CONDUIT SUPPORT AT 10'-0" MAX.		BRACE DIRECTION/SPACING			HANGER ATTACHMENT TYPE		BRACE ATTACHMENT TYPE
		TRANS. 20 FT	LONG. 40 FT	ALL-DIR. 40 FT	TRANS./LONG. BRACE LOCATION	ALL-DIR. BRACE LOCATION	
PIPING/CONDUIT WEIGHT (LBS/FT)	10	F1.10	F1.11	F1.12	38C	38D	50A
	20	F1.10	F1.11	F1.12	38E	38G	50B
	30	F1.10	F1.11	F1.12	38F	38H	50C
	40	F1.20	F1.21	F1.22	50G	50K	50D
	50	F1.20	F1.21	F1.22	50J	50L	50E
	60	F1.20	F1.21	F1.22	50J	50M	50E
	70	F1.30	F1.31	F1.32	63K	63N	63F
	80	F1.30	F1.31	F1.32	63L	63N	63F
	90	F1.30	F1.31	F1.32	63M	63P	63G
	100	F1.30	F1.31	F1.32	63M	63P	63G
	150	F1.43	F1.44	F1.45	75P	75Q	75J
	200	F1.50	F1.51	F1.52	75Q	75R	75L
	300	F1.50	F1.51	F1.52	75R	75S	75M
	400	F1.60	F1.61	F1.62	100S	100T	125P
	500	F1.60	F1.61		100S		125Q

REVIEWED FOR CODE COMPLIANCE
CALIFORNIA BUILDING CODE, 2022
HCAI
OPM-0043
BY: William Staehlin
DATE: 01/23/2023

MASON WEST
1601 E. Miraloma Ave. Placentia, CA 92870
TEL (714) 630 - 0701, www.masonwest.com

Jiefu "Jeff" Zhang, SE
California SE No. S5270

PAGE
B1.12.1

PIPING/CONDUIT ON TRAPEZE	SEISMIC SOLID BRACING INSTALLATION REQUIREMENTS	LATERAL FORCE Fp = 0.5g (ASD) VERTICAL FORCE Fpv = 0.375g (ASD)

Fp = 0.5g Fpv = 0.375g		SOLID (RIGID) BRACING FOR 458BRACE ANGLE BRACE SPACING - OPTION #1					
PIPING/CONDUIT SUPPORT AT 10'-0" MAX.		INSTALLATION DETAILS					
		BRACE DIRECTION/SPACING			HANGER ATTACHMENT TYPE		BRACE ATTACHMENT TYPE
		TRANS. 30 FT	LONG. 60 FT	ALL-DIR. 60 FT	TRANS./LONG. BRACE LOCATION	ALL-DIR. BRACE LOCATION	
PIPING/CONDUIT WEIGHT (LBS/FT)	10	F1.10	F1.11	F1.12	38D	38G	50C
	20	F1.10	F1.11	F1.12	38G	38L	50E
	30	F1.20	F1.21	F1.22	50J	50M	50G
	40	F1.30	F1.31	F1.32	63K	63P	63H
	50	F1.33	F1.34	F1.45	63L	75Q	63J
	60	F1.33	F1.34	F1.45	63M	75Q	63K
	70	F1.33	F1.34	F1.45	63N	75R	63L
	80	F1.50	F1.51	F1.52	75N	75R	75L
	90	F1.50	F1.51	F1.52	75P	75R	75M
	100	F1.50	F1.51	F1.52	75P	75S	75M
	150	F1.50	F1.51	F1.55	75R	75T	75P
	200	F1.50	F1.51	F1.72	75R	125T	75Q
	300	F1.73	F1.74		125S		125R

Fp = 0.5g Fpv = 0.375g		SOLID (RIGID) BRACING FOR 458BRACE ANGLE BRACE SPACING - OPTION #2					
PIPING/CONDUIT SUPPORT AT 10'-0" MAX.		INSTALLATION DETAILS					
		BRACE DIRECTION/SPACING			HANGER ATTACHMENT TYPE		BRACE ATTACHMENT TYPE
		TRANS. 20 FT	LONG. 40 FT	ALL-DIR. 40 FT	TRANS./LONG. BRACE LOCATION	ALL-DIR. BRACE LOCATION	
PIPING/CONDUIT WEIGHT (LBS/FT)	10	F1.10	F1.11	F1.12	38D	38E	50B
	20	F1.10	F1.11	F1.12	38F	38J	50D
	30	F1.10	F1.11	F1.12	38G	38L	50E
	40	F1.20	F1.21	F1.22	50J	50M	50F
	50	F1.20	F1.21	F1.22	50K	50N	50G
	60	F1.30	F1.31	F1.32	63L	63P	63H
	70	F1.33	F1.34	F1.35	63M	63Q	63J
	80	F1.33	F1.34	F1.45	63M	75Q	63J
	90	F1.33	F1.34	F1.45	63N	75Q	63K
	100	F1.33	F1.34	F1.45	63N	75R	63L
	150	F1.50	F1.51	F1.52	75Q	75S	75M
	200	F1.50	F1.51	F1.52	75R	75S	75P
	300	F1.50	F1.51		75S		75Q
	400	F1.70	F1.71		125T		125R
	500	F1.73	F1.74		125T		125S

REVIEWED FOR CODE COMPLIANCE
HCAi
OPM-0043
BY: William Staehlin
DATE: 01/23/2023
CALIFORNIA BUILDING CODE 2022

MASON WEST
1601 E. Miraloma Ave. Placentia, CA 92870
TEL (714) 630 - 0701, www.masonwest.com

Jiefu "Jeff" Zhang, SE
California SE No. S5270

PAGE
B1.13

1/23/2023 OPM-0043: Reviewed for Code Compliance by William Staehlin 184 of 792

PIPING/CONDUIT ON TRAPEZE

SEISMIC SOLID BRACING INSTALLATION REQUIREMENTS

LATERAL FORCE
Fp = 0.5g (ASD)
VERTICAL FORCE
Fpv = 0.375g (ASD)

Fp = 0.5g Fpv = 0.375g		SOLID (RIGID) BRACING FOR 458BRACE ANGLE BRACE SPACING - OPTION #3					
		INSTALLATION DETAILS					
PIPING/CONDUIT SUPPORT AT 10'-0" MAX.		BRACE DIRECTION/SPACING			HANGER ATTACHMENT TYPE		BRACE ATTACHMENT TYPE
		TRANS. 10 FT	LONG. 20 FT	ALL-DIR. 20 FT	TRANS./LONG. BRACE LOCATION	ALL-DIR. BRACE LOCATION	
PIPING/CONDUIT WEIGHT (LBS/FT)	10	F1.10	F1.11	F1.12	38C	38D	50A
	20	F1.10	F1.11	F1.12	38E	38G	50B
	30	F1.10	F1.11	F1.12	38F	38H	50C
	40	F1.20	F1.21	F1.22	50G	50K	50D
	50	F1.20	F1.21	F1.22	50J	50L	50E
	60	F1.20	F1.21	F1.22	50J	50M	50E
	70	F1.30	F1.31	F1.32	63K	63N	63F
	80	F1.30	F1.31	F1.32	63L	63N	63F
	90	F1.30	F1.31	F1.32	63M	63P	63G
	100	F1.30	F1.31	F1.32	63M	63P	63G
	150	F1.43	F1.44	F1.45	75P	75Q	75J
	200	F1.50	F1.51	F1.52	75Q	75R	75L
	300	F1.50	F1.51	F1.52	75R	75S	75M
	400	F1.60	F1.61	F1.62	100S	100T	125P
	500	F1.60	F1.61		100S		125Q

REVIEWED FOR CODE COMPLIANCE
CALIFORNIA BUILDING CODE, 2022
HCAI
OPM-0043
BY: William Staehlin
DATE: 01/23/2023

MASON WEST
1601 E. Miraloma Ave. Placentia, CA 92870
TEL (714) 630 - 0701, www.masonwest.com

Jiefu "Jeff" Zhang, SE
California SE No. S5270

PAGE
B1.13.1

PIPING/CONDUIT ON TRAPEZE

SEISMIC SOLID BRACING INSTALLATION REQUIREMENTS

LATERAL FORCE
Fp = 1.0g (ASD)
VERTICAL FORCE
Fpv = 0.375g (ASD)

Fp = 1g Fpv = 0.375g		SOLID (RIGID) BRACING FOR 458BRACE ANGLE BRACE SPACING - OPTION #1					
		INSTALLATION DETAILS					
PIPING/CONDUIT SUPPORT AT 10'-0" MAX.		BRACE DIRECTION/SPACING			HANGER ATTACHMENT TYPE		BRACE ATTACHMENT TYPE
		TRANS. 20 FT	LONG. 40 FT	ALL-DIR. 40 FT	TRANS./LONG. BRACE LOCATION	ALL-DIR. BRACE LOCATION	
PIPING/CONDUIT WEIGHT (LBS/FT)	10	F1.10	F1.11	F1.12	38E	38H	50D
	20	F1.10	F1.11	F1.22	38H	50M	50F
	30	F1.30	F1.31	F1.32	63K	63N	63H
	40	F1.33	F1.34	F1.45	63L	75Q	63J
	50	F1.33	F1.34	F1.45	63M	75Q	63L
	60	F1.50	F1.51	F1.52	75N	75R	75L
	70	F1.50	F1.51	F1.52	75P	75R	75M
	80	F1.50	F1.51	F1.52	75P	75S	75N
	90	F1.50	F1.51	F1.52	75Q	75S	75N
	100	F1.50	F1.51	F1.52	75Q	75S	75P
	150	F1.50	F1.51	F1.72	75R	125T	75Q
	200	F1.70	F1.71		125S		125R

Fp = 1g Fpv = 0.375g		SOLID (RIGID) BRACING FOR 458BRACE ANGLE BRACE SPACING - OPTION #2					
		INSTALLATION DETAILS					
PIPING/CONDUIT SUPPORT AT 10'-0" MAX.		BRACE DIRECTION/SPACING			HANGER ATTACHMENT TYPE		BRACE ATTACHMENT TYPE
		TRANS. 15 FT	LONG. 30 FT	ALL-DIR. 30 FT	TRANS./LONG. BRACE LOCATION	ALL-DIR. BRACE LOCATION	
PIPING/CONDUIT WEIGHT (LBS/FT)	10	F1.10	F1.11	F1.12	38D	38G	50C
	20	F1.10	F1.11	F1.12	38G	38L	50E
	30	F1.20	F1.21	F1.22	50J	50M	50G
	40	F1.30	F1.31	F1.32	63K	63P	63H
	50	F1.33	F1.34	F1.45	63L	75Q	63J
	60	F1.33	F1.34	F1.45	63M	75Q	63K
	70	F1.33	F1.34	F1.45	63N	75R	63L
	80	F1.50	F1.51	F1.52	75N	75R	75L
	90	F1.50	F1.51	F1.52	75P	75R	75M
	100	F1.50	F1.51	F1.52	75P	75S	75M
	150	F1.50	F1.51	F1.55	75R	75T	75P
	200	F1.50	F1.51	F1.72	75R	125T	75Q
	300	F1.73	F1.74		125S		125R

REVIEWED FOR CODE COMPLIANCE
HCAi
OPM-0043
DATE: 01/23/2023
OTHERWISE BUILDING CODE 2022

MASON WEST
1601 E. Miraloma Ave. Placentia, CA 92870
TEL (714) 630 - 0701, www.masonwest.com

Jiefu "Jeff" Zhang, SE
California SE No. S5270

PIPING/CONDUIT ON TRAPEZE

SEISMIC SOLID BRACING INSTALLATION REQUIREMENTS

LATERAL FORCE
Fp = 1.0g (ASD)
VERTICAL FORCE
Fpv = 0.375g (ASD)

Fp = 1g Fpv = 0.375g		SOLID (RIGID) BRACING FOR 458BRACE ANGLE BRACE SPACING - OPTION #3					
		INSTALLATION DETAILS					
PIPING/CONDUIT SUPPORT AT 10'-0" MAX.		BRACE DIRECTION/SPACING			HANGER ATTACHMENT TYPE		BRACE ATTACHMENT TYPE
		TRANS. 10 FT	LONG. 20 FT	ALL-DIR. 20 FT	TRANS./LONG. BRACE LOCATION	ALL-DIR. BRACE LOCATION	
PIPING/CONDUIT WEIGHT (LBS/FT)	10	F1.10	F1.11	F1.12	38D	38F	50B
	20	F1.10	F1.11	F1.12	38F	38J	50D
	30	F1.10	F1.11	F1.12	38G	38L	50E
	40	F1.20	F1.21	F1.22	50J	50M	50F
	50	F1.20	F1.21	F1.22	50K	50N	50G
	60	F1.30	F1.31	F1.32	63L	63P	63H
	70	F1.33	F1.34	F1.35	63M	63Q	63J
	80	F1.33	F1.34	F1.45	63M	75Q	63J
	90	F1.33	F1.34	F1.45	63N	75Q	63K
	100	F1.33	F1.34	F1.45	63N	75R	63L
	150	F1.50	F1.51	F1.52	75Q	75S	75M
	200	F1.50	F1.51	F1.52	75R	75S	75P
	300	F1.50	F1.51		75S		75Q
	400	F1.70	F1.71		125T		125R
	500	F1.73	F1.74		125T		125S

REVIEWED FOR CODE COMPLIANCE
CALIFORNIA BUILDING CODE, 2022
HCAI
OPM-0043
BY: William Staehlin
DATE: 01/23/2023

MASON WEST
1601 E. Miraloma Ave. Placentia, CA 92870
TEL (714) 630 - 0701, www.masonwest.com

Jiefu "Jeff" Zhang, SE
California SE No. S5270

PAGE
B1.14.1

PIPING/CONDUIT ON TRAPEZE

SEISMIC CABLE BRACING INSTALLATION REQUIREMENTS

LATERAL FORCE
Fp = 0.25g (ASD)
VERTICAL FORCE
Fpv = 0.375g (ASD)

Fp = 0.25g Fpv = 0.375g		STANDARD CABLE BRACING FOR 458BRACE ANGLE BRACE SPACING - OPTION #1					
PIPING/CONDUIT SUPPORT AT 10'-0" MAX.		INSTALLATION DETAILS					
		BRACE DIRECTION/SPACING			HANGER ATTACHMENT TYPE		BRACE ATTACHMENT TYPE
		TRANS. 40 FT	LONG. 80 FT	ALL-DIR. 80 FT	TRANS./LONG. BRACE LOCATION	ALL-DIR. BRACE LOCATION	
PIPING/CONDUIT WEIGHT (LBS/FT)	10	F2.10	F2.11	F2.12	38B	38B	38B
	20	F2.10	F2.11	F2.12	38D	38D	38D
	30	F2.20	F2.21	F2.22	50E	50E	50E
	40	F2.20	F2.21	F2.22	50F	50F	50F
	50	F2.20	F2.21	F2.22	50G	50G	50G
	60	F2.40	F2.41	F2.42	75G	75G	63H
	70	F2.40	F2.41	F2.42	75H	75H	63J
	80	F2.40	F2.41	F2.42	75J	75J	63J
	90	F2.40	F2.41	F2.42	75J	75J	63K

Fp = 0.25g Fpv = 0.375g		STANDARD CABLE BRACING FOR 458BRACE ANGLE BRACE SPACING - OPTION #2					
PIPING/CONDUIT SUPPORT AT 10'-0" MAX.		INSTALLATION DETAILS					
		BRACE DIRECTION/SPACING			HANGER ATTACHMENT TYPE		BRACE ATTACHMENT TYPE
		TRANS. 30 FT	LONG. 60 FT	ALL-DIR. 60 FT	TRANS./LONG. BRACE LOCATION	ALL-DIR. BRACE LOCATION	
PIPING/CONDUIT WEIGHT (LBS/FT)	10	F2.10	F2.11	F2.12	38B	38B	38B
	20	F2.10	F2.11	F2.12	38D	38D	38C
	30	F2.10	F2.11	F2.12	38E	38E	38D
	40	F2.20	F2.21	F2.22	50F	50F	50E
	50	F2.20	F2.21	F2.22	50G	50G	50F
	60	F2.20	F2.21	F2.22	50G	50G	50G
	70	F2.30	F2.31	F2.32	63H	63H	50G
	80	F2.40	F2.41	F2.42	75J	75J	63H
	90	F2.40	F2.41	F2.42	75J	75J	63H
	100	F2.40	F2.41	F2.42	75K	75K	63J

Fp = 0.25g Fpv = 0.375g		STANDARD CABLE BRACING FOR 458BRACE ANGLE BRACE SPACING - OPTION #3					
PIPING/CONDUIT SUPPORT AT 10'-0" MAX.		INSTALLATION DETAILS					
		BRACE DIRECTION/SPACING			HANGER ATTACHMENT TYPE		BRACE ATTACHMENT TYPE
		TRANS. 20 FT	LONG. 40 FT	ALL-DIR. 40 FT	TRANS./LONG. BRACE LOCATION	ALL-DIR. BRACE LOCATION	
PIPING/CONDUIT WEIGHT (LBS/FT)	10	F2.10	F2.11	F2.12	38B	38B	38A
	20	F2.10	F2.11	F2.12	38D	38D	38B
	30	F2.10	F2.11	F2.12	38E	38E	38C
	40	F2.20	F2.21	F2.22	50F	50F	50D
	50	F2.20	F2.21	F2.22	50G	50G	50E
	60	F2.20	F2.21	F2.22	50G	50G	50E
	70	F2.30	F2.31	F2.32	63H	63H	50F
	80	F2.30	F2.31	F2.32	63J	63J	50F
	90	F2.30	F2.31	F2.32	63J	63J	50G
	100	F2.30	F2.31	F2.32	63K	63K	50G
	150	F2.40	F2.41	F2.42	75M	75M	63J

REVIEWED FOR CODE COMPLIANCE
OPM-0043
BY: William Staehlin
DATE: 01/23/2023
CALIFORNIA BUILDING CODE 2022

MASON WEST
1601 E. Miraloma Ave. Placentia, CA 92870
TEL (714) 630 - 0701, www.masonwest.com

Jiefu "Jeff" Zhang, SE
California SE No. S5270

PAGE
B1.15

PIPING/CONDUIT ON TRAPEZE

SEISMIC CABLE BRACING INSTALLATION REQUIREMENTS

LATERAL FORCE
Fp = 0.5g (ASD)
VERTICAL FORCE
Fpv = 0.375g (ASD)

Fp = 0.5g Fpv = 0.375g		STANDARD CABLE BRACING FOR 458BRACE ANGLE BRACE SPACING - OPTION #1					
PIPING/CONDUIT SUPPORT AT 10'-0" MAX.		INSTALLATION DETAILS					
		BRACE DIRECTION/SPACING			HANGER ATTACHMENT TYPE		BRACE ATTACHMENT TYPE
		TRANS. 30 FT	LONG. 60 FT	ALL-DIR. 60 FT	TRANS./LONG. BRACE LOCATION	ALL-DIR. BRACE LOCATION	
PIPING/CONDUIT WEIGHT (LBS/FT)	10	F2.10	F2.11	F2.12	38B	38B	38C
	20	F2.20	F2.21	F2.22	50D	50D	50E
	30	F2.20	F2.21	F2.22	50E	50E	50G
	40	F2.40	F2.41	F2.42	75F	75F	63H
	50	F2.40	F2.41	F2.42	75G	75G	63J
	60	F2.40	F2.41	F2.42	75G	75G	63K

Fp = 0.5g Fpv = 0.375g		STANDARD CABLE BRACING FOR 458BRACE ANGLE BRACE SPACING - OPTION #2					
PIPING/CONDUIT SUPPORT AT 10'-0" MAX.		INSTALLATION DETAILS					
		BRACE DIRECTION/SPACING			HANGER ATTACHMENT TYPE		BRACE ATTACHMENT TYPE
		TRANS. 20 FT	LONG. 40 FT	ALL-DIR. 40 FT	TRANS./LONG. BRACE LOCATION	ALL-DIR. BRACE LOCATION	
PIPING/CONDUIT WEIGHT (LBS/FT)	10	F2.10	F2.11	F2.12	38B	38B	38B
	20	F2.10	F2.11	F2.12	38D	38D	38D
	30	F2.20	F2.21	F2.22	50E	50E	50E
	40	F2.20	F2.21	F2.22	50F	50F	50F
	50	F2.20	F2.21	F2.22	50G	50G	50G
	60	F2.40	F2.41	F2.42	75G	75G	63H
	70	F2.40	F2.41	F2.42	75H	75H	63J
	80	F2.40	F2.41	F2.42	75J	75J	63J
	90	F2.40	F2.41	F2.42	75J	75J	63K

Fp = 0.5g Fpv = 0.375g		STANDARD CABLE BRACING FOR 458BRACE ANGLE BRACE SPACING - OPTION #3					
PIPING/CONDUIT SUPPORT AT 10'-0" MAX.		INSTALLATION DETAILS					
		BRACE DIRECTION/SPACING			HANGER ATTACHMENT TYPE		BRACE ATTACHMENT TYPE
		TRANS. 10 FT	LONG. 20 FT	ALL-DIR. 20 FT	TRANS./LONG. BRACE LOCATION	ALL-DIR. BRACE LOCATION	
PIPING/CONDUIT WEIGHT (LBS/FT)	10	F2.10	F2.11	F2.12	38B	38B	38A
	20	F2.10	F2.11	F2.12	38D	38D	38B
	30	F2.10	F2.11	F2.12	38E	38E	38C
	40	F2.20	F2.21	F2.22	50F	50F	50D
	50	F2.20	F2.21	F2.22	50G	50G	50E
	60	F2.20	F2.21	F2.22	50G	50G	50E
	70	F2.30	F2.31	F2.32	63H	63H	50F
	80	F2.30	F2.31	F2.32	63J	63J	50F
	90	F2.30	F2.31	F2.32	63J	63J	50G
	100	F2.30	F2.31	F2.32	63K	63K	50G
	150	F2.40	F2.41	F2.42	75M	75M	63J

REVIEWED FOR CODE COMPLIANCE
OPM-0043
BY: William Staehlin
DATE: 01/23/2023
CALIFORNIA BUILDING CODE 2022

MASON WEST
1601 E. Miraloma Ave. Placentia, CA 92870
TEL (714) 630 - 0701, www.masonwest.com

Jiefu "Jeff" Zhang, SE
California SE No. S5270

PIPING/CONDUIT ON TRAPEZE

SEISMIC CABLE BRACING INSTALLATION REQUIREMENTS

LATERAL FORCE
Fp = 1.0g (ASD)
VERTICAL FORCE
Fpv = 0.375g (ASD)

Fp = 1g Fpv = 0.375g		STANDARD CABLE BRACING FOR 458BRACE ANGLE BRACE SPACING - OPTION #1					
		INSTALLATION DETAILS					
PIPING/CONDUIT SUPPORT AT 10'-0" MAX.		BRACE DIRECTION/SPACING			HANGER ATTACHMENT TYPE		BRACE ATTACHMENT TYPE
		TRANS. 20 FT	LONG. 40 FT	ALL-DIR. 40 FT	TRANS./LONG. BRACE LOCATION	ALL-DIR. BRACE LOCATION	
PIPING/CONDUIT WEIGHT (LBS/FT)	10	F2.10	F2.11	F2.12	38B	38B	38D
	20	F2.20	F2.21	F2.22	50D	50D	50F
	30	F2.40	F2.41	F2.42	75E	75E	63H
	40	F2.40	F2.41	F2.42	75F	75F	63J

Fp = 1g Fpv = 0.375g		STANDARD CABLE BRACING FOR 458BRACE ANGLE BRACE SPACING - OPTION #2					
		INSTALLATION DETAILS					
PIPING/CONDUIT SUPPORT AT 10'-0" MAX.		BRACE DIRECTION/SPACING			HANGER ATTACHMENT TYPE		BRACE ATTACHMENT TYPE
		TRANS. 15 FT	LONG. 30 FT	ALL-DIR. 30 FT	TRANS./LONG. BRACE LOCATION	ALL-DIR. BRACE LOCATION	
PIPING/CONDUIT WEIGHT (LBS/FT)	10	F2.10	F2.11	F2.12	38B	38B	38C
	20	F2.20	F2.21	F2.22	50D	50D	50E
	30	F2.20	F2.21	F2.22	50E	50E	50G
	40	F2.40	F2.41	F2.42	75F	75F	63H
	50	F2.40	F2.41	F2.42	75G	75G	63J
	60	F2.40	F2.41	F2.42	75G	75G	63K

Fp = 1g Fpv = 0.375g		STANDARD CABLE BRACING FOR 458BRACE ANGLE BRACE SPACING - OPTION #3					
		INSTALLATION DETAILS					
PIPING/CONDUIT SUPPORT AT 10'-0" MAX.		BRACE DIRECTION/SPACING			HANGER ATTACHMENT TYPE		BRACE ATTACHMENT TYPE
		TRANS. 10 FT	LONG. 20 FT	ALL-DIR. 20 FT	TRANS./LONG. BRACE LOCATION	ALL-DIR. BRACE LOCATION	
PIPING/CONDUIT WEIGHT (LBS/FT)	10	F2.10	F2.11	F2.12	38B	38B	38B
	20	F2.10	F2.11	F2.12	38D	38D	38D
	30	F2.20	F2.21	F2.22	50E	50E	50E
	40	F2.20	F2.21	F2.22	50F	50F	50F
	50	F2.20	F2.21	F2.22	50G	50G	50G
	60	F2.40	F2.41	F2.42	75G	75G	63H
	70	F2.40	F2.41	F2.42	75H	75H	63J
	80	F2.40	F2.41	F2.42	75J	75J	63J
	90	F2.40	F2.41	F2.42	75J	75J	63K

REVIEWED FOR CODE COMPLIANCE
OPM-0043
BY: William Staehlin
DATE: 01/23/2023
CALIFORNIA BUILDING CODE 2022

MASON WEST
1601 E. Miraloma Ave. Placentia, CA 92870
TEL (714) 630 - 0701, www.masonwest.com

Jiefu "Jeff" Zhang, SE
California SE No. S5270

PIPING/CONDUIT ON TRAPEZE

SEISMIC CABLE X-PATTERN BRACING INSTALLATION REQUIREMENTS

LATERAL FORCE
Fp = 0.25g (ASD)
VERTICAL FORCE
Fpv = 0.375g (ASD)

Fp = 0.25g Fpv = 0.375g		X-PATTERN CABLE BRACING FOR 458BRACE ANGLE BRACE SPACING - OPTION #1		
PIPING/CONDUIT SUPPORT AT 10'-0" MAX.		INSTALLATION DETAILS		
		BRACE SPACING 40 FT	HANGER ATTACHMENT TYPE	BRACE ATTACHMENT TYPE
PIPING/CONDUIT WEIGHT (LBS/FT)	10	F3.10	38C	38B
	20	F3.10	38E	38D
	30	F3.11	50F	50E
	40	F3.11	50G	50F
	50	F3.11	50H	50G
	60	F3.13	75J	63H
	70	F3.13	75K	63J
	80	F3.13	75L	63J
	90	F3.13	75L	63K

Fp = 0.25g Fpv = 0.375g		X-PATTERN CABLE BRACING FOR 458BRACE ANGLE BRACE SPACING - OPTION #2		
PIPING/CONDUIT SUPPORT AT 10'-0" MAX.		INSTALLATION DETAILS		
		BRACE SPACING 30 FT	HANGER ATTACHMENT TYPE	BRACE ATTACHMENT TYPE
PIPING/CONDUIT WEIGHT (LBS/FT)	10	F3.10	38C	38B
	20	F3.10	38E	38C
	30	F3.10	38F	38D
	40	F3.11	50G	50E
	50	F3.11	50H	50F
	60	F3.11	50J	50G
	70	F3.12	63K	50G
	80	F3.13	75L	63H
	90	F3.13	75L	63H
	100	F3.13	75M	63J

Fp = 0.25g Fpv = 0.375g		X-PATTERN CABLE BRACING FOR 458BRACE ANGLE BRACE SPACING - OPTION #3		
PIPING/CONDUIT SUPPORT AT 10'-0" MAX.		INSTALLATION DETAILS		
		BRACE SPACING 20 FT	HANGER ATTACHMENT TYPE	BRACE ATTACHMENT TYPE
PIPING/CONDUIT WEIGHT (LBS/FT)	10	F3.10	38C	38A
	20	F3.10	38E	38B
	30	F3.10	38F	38C
	40	F3.11	50G	50D
	50	F3.11	50H	50E
	60	F3.11	50J	50E
	70	F3.12	63K	50F
	80	F3.12	63L	50F
	90	F3.12	63L	50G
	100	F3.12	63M	50G
	150	F3.13	75P	63J

REVIEWED FOR CODE COMPLIANCE
HCAI
OPM-0043
BY: William Staehlin
DATE: 01/23/2023
CALIFORNIA BUILDING CODE

MASON WEST
1601 E. Miraloma Ave. Placentia, CA 92870
TEL (714) 630 - 0701, www.masonwest.com

Jiefu "Jeff" Zhang, SE
California SE No. S5270

PIPING/CONDUIT ON TRAPEZE

SEISMIC CABLE X-PATTERN BRACING INSTALLATION REQUIREMENTS

LATERAL FORCE
Fp = 0.5g (ASD)
VERTICAL FORCE
Fpv = 0.375g (ASD)

Fp = 0.5g Fpv = 0.375g		X-PATTERN CABLE BRACING FOR 458BRACE ANGLE BRACE SPACING - OPTION #1		
PIPING/CONDUIT SUPPORT AT 10'-0" MAX.		INSTALLATION DETAILS		
		BRACE SPACING 30 FT	HANGER ATTACHMENT TYPE	BRACE ATTACHMENT TYPE
PIPING/CONDUIT WEIGHT (LBS/FT)	10	F3.10	38C	38C
	20	F3.11	50E	50E
	30	F3.11	50F	50G
	40	F3.13	75G	63H
	50	F3.13	75H	63J
	60	F3.13	75J	63K

Fp = 0.5g Fpv = 0.375g		X-PATTERN CABLE BRACING FOR 458BRACE ANGLE BRACE SPACING - OPTION #2		
PIPING/CONDUIT SUPPORT AT 10'-0" MAX.		INSTALLATION DETAILS		
		BRACE SPACING 20 FT	HANGER ATTACHMENT TYPE	BRACE ATTACHMENT TYPE
PIPING/CONDUIT WEIGHT (LBS/FT)	10	F3.10	38C	38B
	20	F3.10	38E	38D
	30	F3.11	50F	50E
	40	F3.11	50G	50F
	50	F3.11	50H	50G
	60	F3.13	75J	63H
	70	F3.13	75K	63J
	80	F3.13	75L	63J
	90	F3.13	75L	63K

Fp = 0.5g Fpv = 0.375g		X-PATTERN CABLE BRACING FOR 458BRACE ANGLE BRACE SPACING - OPTION #3		
PIPING/CONDUIT SUPPORT AT 10'-0" MAX.		INSTALLATION DETAILS		
		BRACE SPACING 10 FT	HANGER ATTACHMENT TYPE	BRACE ATTACHMENT TYPE
PIPING/CONDUIT WEIGHT (LBS/FT)	10	F3.10	38C	38A
	20	F3.10	38E	38B
	30	F3.10	38F	38C
	40	F3.11	50G	50D
	50	F3.11	50H	50E
	60	F3.11	50J	50E
	70	F3.12	63K	50F
	80	F3.12	63L	50F
	90	F3.12	63L	50G
	100	F3.12	63M	50G
	150	F3.13	75P	63J

REVIEWED FOR CODE COMPLIANCE
HCAI
OPM-0043
BY: William Staehlin
DATE: 01/23/2023
CALIFORNIA BUILDING CODE 2022

MASON WEST
1601 E. Miraloma Ave. Placentia, CA 92870
TEL (714) 630 - 0701, www.masonwest.com

Jiefu "Jeff" Zhang, SE
California SE No. S5270

PAGE
B1.19

PIPING/CONDUIT ON TRAPEZE	SEISMIC CABLE X-PATTERN BRACING INSTALLATION REQUIREMENTS	LATERAL FORCE Fp = 1.0g (ASD) VERTICAL FORCE Fpv = 0.375g (ASD)

Fp = 1g Fpv = 0.375g		X-PATTERN CABLE BRACING FOR 458BRACE ANGLE BRACE SPACING - OPTION #1		
		INSTALLATION DETAILS		
PIPING/CONDUIT SUPPORT AT 10'-0" MAX.		BRACE SPACING 20 FT	HANGER ATTACHMENT TYPE	BRACE ATTACHMENT TYPE
PIPING/CONDUIT WEIGHT (LBS/FT)	10	F3.10	38C	38D
	20	F3.11	50E	50F
	30	F3.13	75F	63H
	40	F3.13	75G	63J

Fp = 1g Fpv = 0.375g		X-PATTERN CABLE BRACING FOR 458BRACE ANGLE BRACE SPACING - OPTION #2		
		INSTALLATION DETAILS		
PIPING/CONDUIT SUPPORT AT 10'-0" MAX.		BRACE SPACING 15 FT	HANGER ATTACHMENT TYPE	BRACE ATTACHMENT TYPE
PIPING/CONDUIT WEIGHT (LBS/FT)	10	F3.10	38C	38C
	20	F3.11	50E	50E
	30	F3.11	50F	50G
	40	F3.13	75G	63H
	50	F3.13	75H	63J
	60	F3.13	75J	63K

Fp = 1g Fpv = 0.375g		X-PATTERN CABLE BRACING FOR 458BRACE ANGLE BRACE SPACING - OPTION #3		
		INSTALLATION DETAILS		
PIPING/CONDUIT SUPPORT AT 10'-0" MAX.		BRACE SPACING 10 FT	HANGER ATTACHMENT TYPE	BRACE ATTACHMENT TYPE
PIPING/CONDUIT WEIGHT (LBS/FT)	10	F3.10	38C	38B
	20	F3.10	38E	38D
	30	F3.11	50F	50E
	40	F3.11	50G	50F
	50	F3.11	50H	50G
	60	F3.13	75J	63H
	70	F3.13	75K	63J
	80	F3.13	75L	63J
	90	F3.13	75L	63K

REVIEWED FOR CODE COMPLIANCE
HCAI
OPM-0043
BY: William Staehlin
DATE: 01/23/2023
CALIFORNIA BUILDING CODE 2022

MASON WEST
1601 E. Miraloma Ave. Placentia, CA 92870
TEL (714) 630 - 0701, www.masonwest.com

Jiefu "Jeff" Zhang, SE
California SE No. S5270

RECTANGULAR DUCT	SEISMIC SOLID BRACING INSTALLATION REQUIREMENTS	LATERAL FORCE Fp = 0.25g (ASD) VERTICAL FORCE Fpv = 0.375g (ASD)

Fp = 0.25g Fpv = 0.375g		SOLID (RIGID) BRACING FOR 458BRACE ANGLE BRACE SPACING - OPTION #1					
		INSTALLATION DETAILS					
DUCT SUPPORT AT 10'-0" MAX.		BRACE DIRECTION/SPACING			HANGER ATTACHMENT TYPE		BRACE ATTACHMENT TYPE
		TRANS./ 30 FT	LONG./ 60 FT	ALL-DIR./ 60 FT	TRANS./LONG. BRACE LOCATION	ALL-DIR. BRACE LOCATION	
DUCT WEIGHT (LBS/FT)	10	D1.10	D1.11	D1.12	38C	38E	50B
	20	D1.10	D1.11	D1.12	38E	38G	50C
	30	D1.10	D1.11	D1.12	38F	38J	50D
	40	D1.20	D1.21	D1.22	50H	50L	50E
	50	D1.20	D1.21	D1.22	50J	50M	50F
	60	D1.20	D1.21	D1.22	50K	50N	50G
	70	D1.30	D1.31	D1.32	63L	63N	63G
	80	D1.33	D1.34	D1.32	63L	63P	63H
	90	D1.33	D1.34		63M		63H
	100	D1.33	D1.34		63M		63J

Fp = 0.25g Fpv = 0.375g		SOLID (RIGID) BRACING FOR 458BRACE ANGLE BRACE SPACING - OPTION #2					
		INSTALLATION DETAILS					
DUCT SUPPORT AT 10'-0" MAX.		BRACE DIRECTION/SPACING			HANGER ATTACHMENT TYPE		BRACE ATTACHMENT TYPE
		TRANS./ 20 FT	LONG./ 40 FT	ALL-DIR./ 40 FT	TRANS./LONG. BRACE LOCATION	ALL-DIR. BRACE LOCATION	
DUCT WEIGHT (LBS/FT)	10	D1.10	D1.11	D1.12	38B	38D	50A
	20	D1.10	D1.11	D1.12	38D	38F	50B
	30	D1.10	D1.11	D1.12	38F	38H	50C
	40	D1.20	D1.21	D1.22	50G	50J	50D
	50	D1.20	D1.21	D1.22	50H	50L	50E
	60	D1.20	D1.21	D1.22	50J	50M	50E
	70	D1.30	D1.31	D1.32	63J	63M	63F
	80	D1.30	D1.31	D1.32	63K	63N	63F
	90	D1.30	D1.31	D1.32	63L	63N	63G
	100	D1.30	D1.31	D1.32	63L	63P	63G

REVIEWED FOR CODE COMPLIANCE
OPM-0043
BY: William Staehlin
DATE: 01/23/2023
CALIFORNIA BUILDING CODE, 2022

MASON WEST
1601 E. Miraloma Ave. Placentia, CA 92870
TEL (714) 630 - 0701, www.masonwest.com

Jiefu "Jeff" Zhang, SE
California SE No. S5270

RECTANGULAR DUCT	SEISMIC SOLID BRACING INSTALLATION REQUIREMENTS	LATERAL FORCE Fp = 0.5g (ASD) VERTICAL FORCE Fpv = 0.375g (ASD)

Fp = 0.5g Fpv = 0.375g		SOLID (RIGID) BRACING FOR 458BRACE ANGLE BRACE SPACING - OPTION #1					
DUCT SUPPORT AT 10'-0" MAX.		INSTALLATION DETAILS					
		BRACE DIRECTION/SPACING			HANGER ATTACHMENT TYPE		BRACE ATTACHMENT TYPE
		TRANS./ 30 FT	LONG./ 60 FT	ALL-DIR./ 60 FT	TRANS./LONG. BRACE LOCATION	ALL-DIR. BRACE LOCATION	
DUCT WEIGHT (LBS/FT)	10	D1.10	D1.11	D1.12	38D	38G	50C
	20	D1.10	D1.11	D1.12	38F	38K	50E
	30	D1.20	D1.21	D1.22	50H	50M	50G
	40	D1.33	D1.34	D1.32	63K	63N	63H
	50	D1.33	D1.34		63L		63J
	60	D1.33	D1.34		63M		63K
	70	D1.33	D1.34		63M		63L

Fp = 0.5g Fpv = 0.375g		SOLID (RIGID) BRACING FOR 458BRACE ANGLE BRACE SPACING - OPTION #2					
DUCT SUPPORT AT 10'-0" MAX.		INSTALLATION DETAILS					
		BRACE DIRECTION/SPACING			HANGER ATTACHMENT TYPE		BRACE ATTACHMENT TYPE
		TRANS./ 20 FT	LONG./ 40 FT	ALL-DIR./ 40 FT	TRANS./LONG. BRACE LOCATION	ALL-DIR. BRACE LOCATION	
DUCT WEIGHT (LBS/FT)	10	D1.10	D1.11	D1.12	38C	38F	50B
	20	D1.10	D1.11	D1.12	38E	38J	50D
	30	D1.10	D1.11	D1.12	38G	38L	50E
	40	D1.20	D1.21	D1.22	50H	50M	50F
	50	D1.20	D1.21	D1.22	50J	50N	50G
	60	D1.33	D1.34	D1.32	63L	63P	63H
	70	D1.33	D1.34	D1.35	63L	63P	63J
	80	D1.33	D1.34		63M	#N/A	63J
	90	D1.33	D1.34		63M	#N/A	63K
	100	D1.33	D1.34		63N	#N/A	63L

Fp = 0.5g Fpv = 0.375g		SOLID (RIGID) BRACING FOR 458BRACE ANGLE BRACE SPACING - OPTION #3					
DUCT SUPPORT AT 10'-0" MAX.		INSTALLATION DETAILS					
		BRACE DIRECTION/SPACING			HANGER ATTACHMENT TYPE		BRACE ATTACHMENT TYPE
		TRANS./ 10 FT	LONG./ 20 FT	ALL-DIR./ 20 FT	TRANS./LONG. BRACE LOCATION	ALL-DIR. BRACE LOCATION	
DUCT WEIGHT (LBS/FT)	10	D1.10	D1.11	D1.12	38B	38D	50A
	20	D1.10	D1.11	D1.12	38D	38F	50B
	30	D1.10	D1.11	D1.12	38F	38H	50C
	40	D1.20	D1.21	D1.22	50G	50J	50D
	50	D1.20	D1.21	D1.22	50H	50L	50E
	60	D1.20	D1.21	D1.22	50J	50M	50E
	70	D1.30	D1.31	D1.32	63J	63M	63F
	80	D1.30	D1.31	D1.32	63K	63N	63F
	90	D1.30	D1.31	D1.32	63L	63N	63G
	100	D1.30	D1.31	D1.32	63L	63P	63G

REVIEWED FOR CODE COMPLIANCE
OPM-0043
BY: William Staehlin
DATE: 01/23/2023
CALIFORNIA BUILDING CODE 2022

MASON WEST
1601 E. Miraloma Ave. Placentia, CA 92870
TEL (714) 630 - 0701, www.masonwest.com

Jiefu "Jeff" Zhang, SE
California SE No. S5270

RECTANGULAR DUCT

SEISMIC SOLID BRACING INSTALLATION REQUIREMENTS

LATERAL FORCE
Fp = 1.0g (ASD)
VERTICAL FORCE
Fpv = 0.375g (ASD)

Fp = 1g Fpv = 0.375g		SOLID (RIGID) BRACING FOR 458BRACE ANGLE BRACE SPACING - OPTION #1					
DUCT SUPPORT AT 10'-0" MAX.		INSTALLATION DETAILS					
		BRACE DIRECTION/SPACING			HANGER ATTACHMENT TYPE		BRACE ATTACHMENT TYPE
		TRANS./ 30 FT	LONG./ 60 FT	ALL-DIR./ 60 FT	TRANS./LONG. BRACE LOCATION	ALL-DIR. BRACE LOCATION	
DUCT WEIGHT (LBS/FT)	10	D1.10	D1.11	D1.12	38F	38K	50E
	20	D1.33	D1.34	D1.32	63J	63N	63H
	30	D1.33	D1.34		63L		63K

Fp = 1g Fpv = 0.375g		SOLID (RIGID) BRACING FOR 458BRACE ANGLE BRACE SPACING - OPTION #2					
DUCT SUPPORT AT 10'-0" MAX.		INSTALLATION DETAILS					
		BRACE DIRECTION/SPACING			HANGER ATTACHMENT TYPE		BRACE ATTACHMENT TYPE
		TRANS./ 20 FT	LONG./ 40 FT	ALL-DIR./ 25 FT	TRANS./LONG. BRACE LOCATION	ALL-DIR. BRACE LOCATION	
DUCT WEIGHT (LBS/FT)	10	D1.10	D1.11	D1.12	38E	38F	50D
	20	D1.10	D1.11	D1.12	38G	38J	50F
	30	D1.33	D1.34	D1.22	63J	50M	63H
	40	D1.33	D1.34	D1.22	63L	50N	63J
	50	D1.33	D1.34	D1.32	63M	63P	63L

ICBO
OPM-0043
BY: William Staehlin
DATE: 01/23/2023
REVIEWED FOR CODE COMPLIANCE
CALIFORNIA BUILDING CODE 2022

Fp = 1g Fpv = 0.375g		SOLID (RIGID) BRACING FOR 458BRACE ANGLE BRACE SPACING - OPTION #3					
DUCT SUPPORT AT 10'-0" MAX.		INSTALLATION DETAILS					
		BRACE DIRECTION/SPACING			HANGER ATTACHMENT TYPE		BRACE ATTACHMENT TYPE
		TRANS./ 10 FT	LONG./ 20 FT	ALL-DIR./ 15 FT	TRANS./LONG. BRACE LOCATION	ALL-DIR. BRACE LOCATION	
DUCT WEIGHT (LBS/FT)	10	D1.10	D1.11	D1.12	38C	38E	50B
	20	D1.10	D1.11	D1.12	38E	38G	50D
	30	D1.10	D1.11	D1.12	38G	38J	50E
	40	D1.20	D1.21	D1.22	50H	50L	50F
	50	D1.20	D1.21	D1.22	50J	50M	50G
	60	D1.33	D1.34	D1.22	63L	50N	63H
	70	D1.33	D1.34	D1.32	63L	63N	63J
	80	D1.33	D1.34	D1.32	63M	63P	63J
	90	D1.33	D1.34	D1.35	63M	63Q	63K
	100	D1.33	D1.34		63N		63L

MASON WEST
1601 E. Miraloma Ave. Placentia, CA 92870
TEL (714) 630 - 0701, www.masonwest.com

Jiefu "Jeff" Zhang, SE
California SE No. S5270

PAGE
B2.2

RECTANGULAR DUCT	SEISMIC CABLE BRACING INSTALLATION REQUIREMENTS	LATERAL FORCE Fp = 0.25g (ASD) VERTICAL FORCE Fpv = 0.375g (ASD)

Fp = 0.25g Fpv = 0.375g		STANDARD CABLE BRACING FOR 458BRACE ANGLE BRACE SPACING - OPTION #1					
		INSTALLATION DETAILS					
DUCT SUPPORT AT 10'-0" MAX.		BRACE DIRECTION/SPACING			HANGER ATTACHMENT TYPE		BRACE ATTACHMENT TYPE
		TRANS./ 30 FT	LONG./ 60 FT	ALL-DIR./ 60 FT	TRANS./LONG. BRACE LOCATION	ALL-DIR. BRACE LOCATION	
DUCT WEIGHT (LBS/FT)	10	D4.10	D4.11	D4.12	38A	38A	38B
	20	D4.10	D4.11	D4.12	38C	38C	38C
	30	D4.10	D4.11	D4.12	38D	38D	38D
	40	D4.20	D4.21	D4.22	50E	50E	50E
	50	D4.20	D4.21	D4.22	50E	50E	50F
	60	D4.20	D4.21	D4.22	50F	50F	50G
	70	D4.30	D4.31	D4.32	63G	63G	50G

Fp = 0.25g Fpv = 0.375g		STANDARD CABLE BRACING FOR 458BRACE ANGLE BRACE SPACING - OPTION #2					
		INSTALLATION DETAILS					
DUCT SUPPORT AT 10'-0" MAX.		BRACE DIRECTION/SPACING			HANGER ATTACHMENT TYPE		BRACE ATTACHMENT TYPE
		TRANS./ 20 FT	LONG./ 40 FT	ALL-DIR./ 40 FT	TRANS./LONG. BRACE LOCATION	ALL-DIR. BRACE LOCATION	
DUCT WEIGHT (LBS/FT)	10	D4.10	D4.11	D4.12	38A	38A	38A
	20	D4.10	D4.11	D4.12	38C	38C	38B
	30	D4.10	D4.11	D4.12	38D	38D	38C
	40	D4.20	D4.21	D4.22	50E	50E	50D
	50	D4.20	D4.21	D4.22	50E	50E	50E
	60	D4.20	D4.21	D4.22	50F	50F	50E
	70	D4.30	D4.31	D4.32	63G	63G	50F
	80	D4.30	D4.31	D4.32	63G	63G	50F
	90	D4.30	D4.31	D4.32	63H	63H	50G
	100	D4.30	D4.31	D4.32	63H	63H	50G

REVIEWED FOR CODE COMPLIANCE
OPM-0043
BY: William Staehlin
DATE: 01/23/2023
CALIFORNIA BUILDING CODE, 2022

MASON WEST
1601 E. Miraloma Ave. Placentia, CA 92870
TEL (714) 630 - 0701, www.masonwest.com

Jiefu "Jeff" Zhang, SE
California SE No. S5270

RECTANGULAR DUCT

SEISMIC CABLE BRACING INSTALLATION REQUIREMENTS

LATERAL FORCE
Fp = 0.5g (ASD)
VERTICAL FORCE
Fpv = 0.375g (ASD)

Fp = 0.5g Fpv = 0.375g		STANDARD CABLE BRACING FOR 45&8BRACE ANGLE BRACE SPACING - OPTION #1					
DUCT SUPPORT AT 10'-0" MAX.		INSTALLATION DETAILS					
		BRACE DIRECTION/SPACING			HANGER ATTACHMENT TYPE		BRACE ATTACHMENT TYPE
		TRANS./ 30 FT	LONG./ 60 FT	ALL-DIR./ 60 FT	TRANS./LONG. BRACE LOCATION	ALL-DIR. BRACE LOCATION	
DUCT WEIGHT (LBS/FT)	10	D4.10	D4.11	D4.12	38A	38A	38C
	20	D4.20	D4.21	D4.22	50C	50C	50E
	30	D4.20	D4.21	D4.22	50D	50D	50G

Fp = 0.5g Fpv = 0.375g		STANDARD CABLE BRACING FOR 45&8BRACE ANGLE BRACE SPACING - OPTION #2					
DUCT SUPPORT AT 10'-0" MAX.		INSTALLATION DETAILS					
		BRACE DIRECTION/SPACING			HANGER ATTACHMENT TYPE		BRACE ATTACHMENT TYPE
		TRANS./ 20 FT	LONG./ 40 FT	ALL-DIR./ 40 FT	TRANS./LONG. BRACE LOCATION	ALL-DIR. BRACE LOCATION	
DUCT WEIGHT (LBS/FT)	10	D4.10	D4.11	D4.12	38A	38A	38B
	20	D4.10	D4.11	D4.12	38C	38C	38D
	30	D4.20	D4.21	D4.22	50D	50D	50E
	40	D4.20	D4.21	D4.22	50E	50E	50F
	50	D4.20	D4.21	D4.22	50E	50E	50G
	60						
	70						
	80						
	90						
	100						

Fp = 0.5g Fpv = 0.375g		STANDARD CABLE BRACING FOR 45&8BRACE ANGLE BRACE SPACING - OPTION #3					
DUCT SUPPORT AT 10'-0" MAX.		INSTALLATION DETAILS					
		BRACE DIRECTION/SPACING			HANGER ATTACHMENT TYPE		BRACE ATTACHMENT TYPE
		TRANS./ 10 FT	LONG./ 20 FT	ALL-DIR./ 20 FT	TRANS./LONG. BRACE LOCATION	ALL-DIR. BRACE LOCATION	
DUCT WEIGHT (LBS/FT)	10	D4.10	D4.11	D4.12	38A	38A	38A
	20	D4.10	D4.11	D4.12	38C	38C	38B
	30	D4.10	D4.11	D4.12	38D	38D	38C
	40	D4.20	D4.21	D4.22	50E	50E	50D
	50	D4.20	D4.21	D4.22	50E	50E	50E
	60	D4.20	D4.21	D4.22	50F	50F	50E
	70	D4.30	D4.31	D4.32	63G	63G	50F
	80	D4.30	D4.31	D4.32	63G	63G	50F
	90	D4.30	D4.31	D4.32	63H	63H	50G
	100	D4.30	D4.31	D4.32	63H	63H	50G

REVIEWED FOR CODE COMPLIANCE
OPM-0043
BY: William Staehlin
DATE: 01/23/2023
CALIFORNIA BUILDING CODE 2022

MASON WEST
1601 E. Miraloma Ave. Placentia, CA 92870
TEL (714) 630 - 0701, www.masonwest.com

Jiefu "Jeff" Zhang, SE
California SE No. S5270

RECTANGULAR DUCT	SEISMIC CABLE BRACING INSTALLATION REQUIREMENTS	LATERAL FORCE Fp = 1.0g (ASD) VERTICAL FORCE Fpv = 0.375g (ASD)

Fp = 1g Fpv = 0.375g		STANDARD CABLE BRACING FOR 458BRACE ANGLE BRACE SPACING - OPTION #1					
DUCT SUPPORT AT 10'-0" MAX.		INSTALLATION DETAILS					
		BRACE DIRECTION/SPACING			HANGER ATTACHMENT TYPE		BRACE ATTACHMENT TYPE
		TRANS./ 20 FT	LONG./ 40 FT	ALL-DIR./ 40 FT	TRANS./LONG. BRACE LOCATION	ALL-DIR. BRACE LOCATION	
DUCT WEIGHT (LBS/FT)	10	D4.10	D4.11	D4.12	38A	38A	38D
	20	D4.20	D4.21	D4.22	50C	50C	50F

Fp = 1g Fpv = 0.375g		STANDARD CABLE BRACING FOR 458BRACE ANGLE BRACE SPACING - OPTION #2					
DUCT SUPPORT AT 10'-0" MAX.		INSTALLATION DETAILS					
		BRACE DIRECTION/SPACING			HANGER ATTACHMENT TYPE		BRACE ATTACHMENT TYPE
		TRANS./ 16 FT	LONG./ 32 FT	ALL-DIR./ 32 FT	TRANS./LONG. BRACE LOCATION	ALL-DIR. BRACE LOCATION	
DUCT WEIGHT (LBS/FT)	10	D4.10	D4.11	D4.12	38A	38A	38C
	20	D4.20	D4.21	D4.22	50C	50C	50E
	30	D4.20	D4.21	D4.22	50D	50D	50G

Fp = 1g Fpv = 0.375g		STANDARD CABLE BRACING FOR 458BRACE ANGLE BRACE SPACING - OPTION #3					
DUCT SUPPORT AT 10'-0" MAX.		INSTALLATION DETAILS					
		BRACE DIRECTION/SPACING			HANGER ATTACHMENT TYPE		BRACE ATTACHMENT TYPE
		TRANS./ 8 FT	LONG./ 16 FT	ALL-DIR./ 16 FT	TRANS./LONG. BRACE LOCATION	ALL-DIR. BRACE LOCATION	
DUCT WEIGHT (LBS/FT)	10	D4.10	D4.11	D4.12	38A	38A	38B
	20	D4.10	D4.11	D4.12	38C	38C	38C
	30	D4.10	D4.11	D4.12	38D	38D	38D
	40	D4.20	D4.21	D4.22	50E	50E	50E
	50	D4.20	D4.21	D4.22	50E	50E	50F
	60	D4.20	D4.21	D4.22	50F	50F	50G

REVIEWED FOR CODE COMPLIANCE
OPM-0043
BY: William Staehlin
DATE: 01/23/2023
CALIFORNIA BUILDING CODE 2022

MASON WEST
1601 E. Miraloma Ave. Placentia, CA 92870
TEL (714) 630 - 0701, www.masonwest.com

Jiefu "Jeff" Zhang, SE
California SE No. S5270

PAGE
B2.5

RECTANGULAR DUCT

SEISMIC CABLE X-PATTERN BRACING INSTALLATION REQUIREMENTS

LATERAL FORCE
Fp = 0.25g (ASD)
VERTICAL FORCE
Fpv = 0.375g (ASD)

Fp = 0.25g Fpv = 0.375g		X-PATTERN CABLE BRACING FOR 458BRACE ANGLE BRACE SPACING - OPTION #1		
DUCT SUPPORT AT 10'-0" MAX.		INSTALLATION DETAILS		
		BRACE SPACING 30 FT	HANGER ATTACHMENT TYPE	BRACE ATTACHMENT TYPE
DUCT WEIGHT (LBS/FT)	10	D5.10	38A	38B
	20	D5.10	38C	38C
	30	D5.10	38D	38D
	40	D5.11	50E	50E
	50	D5.11	50E	50F
	60	D5.11	50F	50G
	70	D5.12	63G	50G

Fp = 0.25g Fpv = 0.375g		X-PATTERN CABLE BRACING FOR 458BRACE ANGLE BRACE SPACING - OPTION #2		
DUCT SUPPORT AT 10'-0" MAX.		INSTALLATION DETAILS		
		BRACE SPACING 30 FT	HANGER ATTACHMENT TYPE	BRACE ATTACHMENT TYPE
DUCT WEIGHT (LBS/FT)	10	D5.10	38A	38B
	20	D5.10	38C	38C
	30	D5.10	38D	38D
	40	D5.11	50E	50E
	50	D5.11	50E	50F
	60	D5.11	50F	50G
	70	D5.12	63G	50G

HCAI
OPM-0043
BY: William Staehlin
DATE: 01/23/2023
REVIEWED FOR CODE COMPLIANCE
CALIFORNIA BUILDING CODE, 2022

MASON WEST
1601 E. Miraloma Ave. Placentia, CA 92870
TEL (714) 630 - 0701, www.masonwest.com

Jiefu "Jeff" Zhang, SE
California SE No. S5270

RECTANGULAR DUCT

SEISMIC CABLE X-PATTERN BRACING INSTALLATION REQUIREMENTS

LATERAL FORCE
Fp = 0.5g (ASD)
VERTICAL FORCE
Fpv = 0.375g (ASD)

Fp = 0.5g Fpv = 0.375g		X-PATTERN CABLE BRACING FOR 458BRACE ANGLE BRACE SPACING - OPTION #1		
DUCT SUPPORT AT 10'-0" MAX.		INSTALLATION DETAILS		
		BRACE SPACING 30 FT	HANGER ATTACHMENT TYPE	BRACE ATTACHMENT TYPE
DUCT WEIGHT (LBS/FT)	10	D5.10	38A	38C
	20	D5.11	50C	50E
	30	D5.11	50D	50G

Fp = 0.5g Fpv = 0.375g		X-PATTERN CABLE BRACING FOR 458BRACE ANGLE BRACE SPACING - OPTION #2		
DUCT SUPPORT AT 10'-0" MAX.		INSTALLATION DETAILS		
		BRACE SPACING 20 FT	HANGER ATTACHMENT TYPE	BRACE ATTACHMENT TYPE
DUCT WEIGHT (LBS/FT)	10	D5.10	38A	38B
	20	D5.10	38C	38D
	30	D5.11	50D	50E
	40	D5.11	50E	50F
	50	D5.11	50E	50G

Fp = 0.5g Fpv = 0.375g		X-PATTERN CABLE BRACING FOR 458BRACE ANGLE BRACE SPACING - OPTION #3		
DUCT SUPPORT AT 10'-0" MAX.		INSTALLATION DETAILS		
		BRACE SPACING 10 FT	HANGER ATTACHMENT TYPE	BRACE ATTACHMENT TYPE
DUCT WEIGHT (LBS/FT)	10	D5.10	38A	38A
	20	D5.10	38C	38B
	30	D5.10	38D	38C
	40	D5.11	50E	50D
	50	D5.11	50E	50E
	60	D5.11	50F	50E
	70	D5.12	63G	50F
	80	D5.12	63G	50F
	90	D5.12	63H	50G
	100	D5.12	63H	50G

REVIEWED FOR CODE COMPLIANCE
HCAI
OPM-0043
BY: William Staehlin
DATE: 01/23/2023
CALIFORNIA BUILDING CODE 2022

MASON WEST
1601 E. Miraloma Ave. Placentia, CA 92870
TEL (714) 630 - 0701, www.masonwest.com

Jiefu "Jeff" Zhang, SE
California SE No. S5270

PAGE
B2.7

RECTANGULAR DUCT

SEISMIC CABLE X-PATTERN BRACING INSTALLATION REQUIREMENTS

LATERAL FORCE
Fp = 1.0g (ASD)
VERTICAL FORCE
Fpv = 0.375g (ASD)

Fp = 1g Fpv = 0.375g		X-PATTERN CABLE BRACING FOR 458BRACE ANGLE BRACE SPACING - OPTION #1		
DUCT SUPPORT AT 10'-0" MAX.		INSTALLATION DETAILS		
		BRACE SPACING 30 FT	HANGER ATTACHMENT TYPE	BRACE ATTACHMENT TYPE
DUCT WEIGHT (LBS/FT)	10	D5.11	50A	50E

Fp = 1g Fpv = 0.375g		X-PATTERN CABLE BRACING FOR 458BRACE ANGLE BRACE SPACING - OPTION #2		
DUCT SUPPORT AT 10'-0" MAX.		INSTALLATION DETAILS		
		BRACE SPACING 20 FT	HANGER ATTACHMENT TYPE	BRACE ATTACHMENT TYPE
DUCT WEIGHT (LBS/FT)	10	D5.10	38A	38D
	20	D5.11	50C	50F

Fp = 1g Fpv = 0.375g		X-PATTERN CABLE BRACING FOR 458BRACE ANGLE BRACE SPACING - OPTION #3		
DUCT SUPPORT AT 10'-0" MAX.		INSTALLATION DETAILS		
		BRACE SPACING 15 FT	HANGER ATTACHMENT TYPE	BRACE ATTACHMENT TYPE
DUCT WEIGHT (LBS/FT)	10	D5.10	38A	38C
	20	D5.11	50C	50E
	30	D5.11	50D	50G

REVIEWED FOR CODE COMPLIANCE
HCAI
OPM-0043
BY: William Staehlin
DATE: 01/23/2023
CALIFORNIA BUILDING CODE 2022

MASON WEST
1601 E. Miraloma Ave. Placentia, CA 92870
TEL (714) 630 - 0701, www.masonwest.com

Jiefu "Jeff" Zhang, SE
California SE No. S5270

ROUND DUCT	SEISMIC SOLID BRACING INSTALLATION REQUIREMENTS	LATERAL FORCE Fp = 0.25g (ASD) VERTICAL FORCE Fpv = 0.375g (ASD)

Fp = 0.25g Fpv = 0.375g		SOLID (RIGID) BRACING FOR 458BRACE ANGLE BRACE SPACING - OPTION #1					
DUCT SUPPORT AT 10'-0" MAX.		INSTALLATION DETAILS					
		BRACE DIRECTION/SPACING			HANGER ATTACHMENT TYPE		BRACE ATTACHMENT TYPE
		TRANS./ 30 FT	LONG./ 60 FT	ALL-DIR./ 60 FT	TRANS./LONG. BRACE LOCATION	ALL-DIR. BRACE LOCATION	
DUCT WEIGHT (LBS/FT)	10	D2.10	D2.11	D2.12	38C	38E	50B
	20	D2.10	D2.11	D2.12	38E	38G	50C
	30	D2.10	D2.11	D2.12	38F	38J	50D
	40	D2.20	D2.21	D2.22	50H	50L	50E
	50	D2.20	D2.21	D2.22	50J	50M	50F
	60	D2.20	D2.21	D2.22	50K	50N	50G

Fp = 0.25g Fpv = 0.375g		SOLID (RIGID) BRACING FOR 458BRACE ANGLE BRACE SPACING - OPTION #2					
DUCT SUPPORT AT 10'-0" MAX.		INSTALLATION DETAILS					
		BRACE DIRECTION/SPACING			HANGER ATTACHMENT TYPE		BRACE ATTACHMENT TYPE
		TRANS./ 30 FT	LONG./ 60 FT	ALL-DIR./ 60 FT	TRANS./LONG. BRACE LOCATION	ALL-DIR. BRACE LOCATION	
DUCT WEIGHT (LBS/FT)	10	D2.10	D2.11	D2.12	38C	38E	50B
	20	D2.10	D2.11	D2.12	38E	38G	50C
	30	D2.10	D2.11	D2.12	38F	38J	50D
	40	D2.20	D2.21	D2.22	50H	50L	50E
	50	D2.20	D2.21	D2.22	50J	50M	50F
	60	D2.20	D2.21	D2.22	50K	50N	50G

Fp = 0.25g Fpv = 0.375g		SOLID (RIGID) BRACING FOR 458BRACE ANGLE BRACE SPACING - OPTION #3					
DUCT SUPPORT AT 10'-0" MAX.		INSTALLATION DETAILS					
		BRACE DIRECTION/SPACING			HANGER ATTACHMENT TYPE		BRACE ATTACHMENT TYPE
		TRANS./ 20 FT	LONG./ 40 FT	ALL-DIR./ 40 FT	TRANS./LONG. BRACE LOCATION	ALL-DIR. BRACE LOCATION	
DUCT WEIGHT (LBS/FT)	10	D2.10	D2.11	D2.12	38B	38D	50A
	20	D2.10	D2.11	D2.12	38D	38F	50B
	30	D2.10	D2.11	D2.12	38F	38H	50C
	40	D2.20	D2.21	D2.22	50G	50J	50D
	50	D2.20	D2.21	D2.22	50H	50L	50E
	60	D2.20	D2.21	D2.22	50J	50M	50E

REVIEWED FOR CODE COMPLIANCE
HCAI
OPM-0043
BY: William Staehlin
DATE: 01/23/2023
CALIFORNIA BUILDING CODE 2022

MASON WEST
1601 E. Miraloma Ave. Placentia, CA 92870
TEL (714) 630 - 0701, www.masonwest.com

Jiefu "Jeff" Zhang, SE
California SE No. S5270

PAGE
B3.0

ROUND DUCT	SEISMIC SOLID BRACING INSTALLATION REQUIREMENTS	LATERAL FORCE Fp = 0.5g (ASD) VERTICAL FORCE Fpv = 0.375g (ASD)

Fp = 0.5g Fpv = 0.375g		SOLID (RIGID) BRACING FOR 458BRACE ANGLE BRACE SPACING - OPTION #1					
DUCT SUPPORT AT 10'-0" MAX.		INSTALLATION DETAILS					
		BRACE DIRECTION/SPACING			HANGER ATTACHMENT TYPE		BRACE ATTACHMENT TYPE
		TRANS./ 30 FT	LONG./ 60 FT	ALL-DIR./ 60 FT	TRANS./LONG. BRACE LOCATION	ALL-DIR. BRACE LOCATION	
DUCT WEIGHT (LBS/FT)	10	D2.10	D2.11	D2.12	38D	38G	50C
	20	D2.10	D2.11	D2.12	38F	38K	50E
	30	D2.20	D2.21	D2.22	50H	50M	50G
	40	D2.30	D2.31	D2.32	63K	63N	63H
	50	D2.30	D2.31	D2.32	63L	63P	63J
	60	D2.30	D2.31		63M		63K

Fp = 0.5g Fpv = 0.375g		SOLID (RIGID) BRACING FOR 458BRACE ANGLE BRACE SPACING - OPTION #2					
DUCT SUPPORT AT 10'-0" MAX.		INSTALLATION DETAILS					
		BRACE DIRECTION/SPACING			HANGER ATTACHMENT TYPE		BRACE ATTACHMENT TYPE
		TRANS./ 20 FT	LONG./ 40 FT	ALL-DIR./ 40 FT	TRANS./LONG. BRACE LOCATION	ALL-DIR. BRACE LOCATION	
DUCT WEIGHT (LBS/FT)	10	D2.10	D2.11	D2.12	38C	38F	50B
	20	D2.10	D2.11	D2.12	38E	38J	50D
	30	D2.10	D2.11	D2.12	38G	38L	50E
	40	D2.20	D2.21	D2.22	50H	50M	50F
	50	D2.20	D2.21	D2.22	50J	50N	50G
	60	D2.30	D2.31	D2.32	63L	63P	63H

Fp = 0.5g Fpv = 0.375g		SOLID (RIGID) BRACING FOR 458BRACE ANGLE BRACE SPACING - OPTION #3					
DUCT SUPPORT AT 10'-0" MAX.		INSTALLATION DETAILS					
		BRACE DIRECTION/SPACING			HANGER ATTACHMENT TYPE		BRACE ATTACHMENT TYPE
		TRANS./ 10 FT	LONG./ 20 FT	ALL-DIR./ 20 FT	TRANS./LONG. BRACE LOCATION	ALL-DIR. BRACE LOCATION	
DUCT WEIGHT (LBS/FT)	10	D2.10	D2.11	D2.12	38B	38D	50A
	20	D2.10	D2.11	D2.12	38D	38F	50B
	30	D2.10	D2.11	D2.12	38F	38H	50C
	40	D2.20	D2.21	D2.22	50G	50J	50D
	50	D2.20	D2.21	D2.22	50H	50L	50E
	60	D2.20	D2.21	D2.22	50J	50M	50E

REVIEWED FOR CODE COMPLIANCE
OPM-0043
BY William Staehlin
DATE: 1/23/2023
CALIFORNIA BUILDING CODE 2022

MASON WEST
1601 E. Miraloma Ave. Placentia, CA 92870
TEL (714) 630 - 0701, www.masonwest.com

Jiefu "Jeff" Zhang, SE
California SE No. S5270

ROUND DUCT	SEISMIC SOLID BRACING INSTALLATION REQUIREMENTS	LATERAL FORCE Fp = 1.0g (ASD) VERTICAL FORCE Fpv = 0.375g (ASD)

Fp = 1g Fpv = 0.375g		SOLID (RIGID) BRACING FOR 458BRACE ANGLE BRACE SPACING - OPTION #1					
DUCT SUPPORT AT 10'-0" MAX.		INSTALLATION DETAILS					
		BRACE DIRECTION/SPACING			HANGER ATTACHMENT TYPE		BRACE ATTACHMENT TYPE
		TRANS./ 30 FT	LONG./ 60 FT	ALL-DIR./ 60 FT	TRANS./LONG. BRACE LOCATION	ALL-DIR. BRACE LOCATION	
DUCT WEIGHT (LBS/FT)	10	D2.10	D2.11	D2.12	38F	38K	50E
	20	D2.30	D2.31	D2.32	63J	63N	63H
	30	D2.30	D2.31		63L		63K

Fp = 1g Fpv = 0.375g		SOLID (RIGID) BRACING FOR 458BRACE ANGLE BRACE SPACING - OPTION #2					
DUCT SUPPORT AT 10'-0" MAX.		INSTALLATION DETAILS					
		BRACE DIRECTION/SPACING			HANGER ATTACHMENT TYPE		BRACE ATTACHMENT TYPE
		TRANS./ 20 FT	LONG./ 40 FT	ALL-DIR./ 40 FT	TRANS./LONG. BRACE LOCATION	ALL-DIR. BRACE LOCATION	
DUCT WEIGHT (LBS/FT)	10	D2.10	D2.11	D2.12	38E	38H	50D
	20	D2.10	D2.11	D2.22	38G	50M	50F
	30	D2.30	D2.31	D2.32	63J	63N	63H
	40	D2.30	D2.31		63L		63J
	50	D2.30	D2.31		63M		63L

Fp = 1g Fpv = 0.375g		SOLID (RIGID) BRACING FOR 458BRACE ANGLE BRACE SPACING - OPTION #3					
DUCT SUPPORT AT 10'-0" MAX.		INSTALLATION DETAILS					
		BRACE DIRECTION/SPACING			HANGER ATTACHMENT TYPE		BRACE ATTACHMENT TYPE
		TRANS./ 10 FT	LONG./ 20 FT	ALL-DIR./ 20 FT	TRANS./LONG. BRACE LOCATION	ALL-DIR. BRACE LOCATION	
DUCT WEIGHT (LBS/FT)	10	D2.10	D2.11	D2.12	38C	38F	50B
	20	D2.10	D2.11	D2.12	38E	38J	50D
	30	D2.10	D2.11	D2.12	38G	38L	50E
	40	D2.20	D2.21	D2.22	50H	50M	50F
	50	D2.20	D2.21	D2.22	50J	50N	50G
	60	D2.30	D2.31	D2.32	63L	63P	63H

REVIEWED FOR CODE COMPLIANCE
HCAI
OPM-0043
BY: William Staehlin
DATE: 01/23/2023
CALIFORNIA BUILDING CODE

MASON WEST
1601 E. Miraloma Ave. Placentia, CA 92870
TEL (714) 630 - 0701, www.masonwest.com

Jiefu "Jeff" Zhang, SE
California SE No. S5270

PAGE
B3.2

ROUND DUCT	SEISMIC CABLE BRACING INSTALLATION REQUIREMENTS	LATERAL FORCE Fp = 0.25g (ASD) VERTICAL FORCE Fpv = 0.375g (ASD)

Fp = 0.25g Fpv = 0.375g		STANDARD CABLE BRACING FOR 458BRACE ANGLE BRACE SPACING - OPTION #1					
DUCT SUPPORT AT 10'-0" MAX.		INSTALLATION DETAILS					
		BRACE DIRECTION/SPACING			HANGER ATTACHMENT TYPE		BRACE ATTACHMENT TYPE
		TRANS./ 30 FT	LONG./ 60 FT	ALL-DIR./ 60 FT	TRANS./LONG. BRACE LOCATION	ALL-DIR. BRACE LOCATION	
DUCT WEIGHT (LBS/FT)	10	D6.10	D6.11	D6.12	38A	38A	38B
	20	D6.10	D6.11	D6.12	38C	38C	38C
	30	D6.10	D6.11	D6.12	38D	38D	38D
	40	D6.20	D6.21	D6.22	50E	50E	50E
	50	D6.20	D6.21	D6.22	50E	50E	50F

Fp = 0.25g Fpv = 0.375g		STANDARD CABLE BRACING FOR 458BRACE ANGLE BRACE SPACING - OPTION #2					
DUCT SUPPORT AT 10'-0" MAX.		INSTALLATION DETAILS					
		BRACE DIRECTION/SPACING			HANGER ATTACHMENT TYPE		BRACE ATTACHMENT TYPE
		TRANS./ 30 FT	LONG./ 60 FT	ALL-DIR./ 60 FT	TRANS./LONG. BRACE LOCATION	ALL-DIR. BRACE LOCATION	
DUCT WEIGHT (LBS/FT)	10	D6.10	D6.11	D6.12	38A	38A	38B
	20	D6.10	D6.11	D6.12	38C	38C	38C
	30	D6.10	D6.11	D6.12	38D	38D	38D
	40	D6.20	D6.21	D6.22	50E	50E	50E
	50	D6.20	D6.21	D6.22	50E	50E	50F
	60	D6.20	D6.21	D6.22	50F	50F	50G

Fp = 0.25g Fpv = 0.375g		STANDARD CABLE BRACING FOR 458BRACE ANGLE BRACE SPACING - OPTION #3					
DUCT SUPPORT AT 10'-0" MAX.		INSTALLATION DETAILS					
		BRACE DIRECTION/SPACING			HANGER ATTACHMENT TYPE		BRACE ATTACHMENT TYPE
		TRANS./ 20 FT	LONG./ 40 FT	ALL-DIR./ 40 FT	TRANS./LONG. BRACE LOCATION	ALL-DIR. BRACE LOCATION	
DUCT WEIGHT (LBS/FT)	10	D6.10	D6.11	D6.12	38A	38A	38A
	20	D6.10	D6.11	D6.12	38C	38C	38B
	30	D6.10	D6.11	D6.12	38D	38D	38C
	40	D6.20	D6.21	D6.22	50E	50E	50D
	50	D6.20	D6.21	D6.22	50E	50E	50E
	60	D6.20	D6.21	D6.22	50F	50F	50E

REVIEWED FOR CODE COMPLIANCE
HCAI
OPM-0043
By: William Staehlin
DATE: 01/23/23
CALIFORNIA BUILDING CODE

MASON WEST
1601 E. Miraloma Ave. Placentia, CA 92870
TEL (714) 630 - 0701, www.masonwest.com

Jiefu "Jeff" Zhang, SE
California SE No. S5270

PAGE
B3.3

ROUND DUCT	SEISMIC CABLE BRACING INSTALLATION REQUIREMENTS	LATERAL FORCE Fp = 0.5g (ASD) VERTICAL FORCE Fpv = 0.375g (ASD)

Fp = 0.5g Fpv = 0.375g		STANDARD CABLE BRACING FOR 458BRACE ANGLE BRACE SPACING - OPTION #1					
DUCT SUPPORT AT 10'-0" MAX.		INSTALLATION DETAILS					
		BRACE DIRECTION/SPACING			HANGER ATTACHMENT TYPE		BRACE ATTACHMENT TYPE
		TRANS./ 30 FT	LONG./ 60 FT	ALL-DIR./ 60 FT	TRANS./LONG. BRACE LOCATION	ALL-DIR. BRACE LOCATION	
DUCT WEIGHT (LBS/FT)	10	D6.10	D6.11	D6.12	38A	38A	38C
	20	D6.20	D6.21	D6.22	50C	50C	50E
	30	D6.20	D6.21	D6.22	50D	50D	50G

Fp = 0.5g Fpv = 0.375g		STANDARD CABLE BRACING FOR 458BRACE ANGLE BRACE SPACING - OPTION #2					
DUCT SUPPORT AT 10'-0" MAX.		INSTALLATION DETAILS					
		BRACE DIRECTION/SPACING			HANGER ATTACHMENT TYPE		BRACE ATTACHMENT TYPE
		TRANS./ 20 FT	LONG./ 40 FT	ALL-DIR./ 40 FT	TRANS./LONG. BRACE LOCATION	ALL-DIR. BRACE LOCATION	
DUCT WEIGHT (LBS/FT)	10	D6.10	D6.11	D6.12	38A	38A	38B
	20	D6.10	D6.11	D6.12	38C	38C	38D
	30	D6.20	D6.21	D6.22	50D	50D	50E
	40	D6.20	D6.21	D6.22	50E	50E	50F
	50	D6.20	D6.21	D6.22	50E	50E	50G

Fp = 0.5g Fpv = 0.375g		STANDARD CABLE BRACING FOR 458BRACE ANGLE BRACE SPACING - OPTION #3					
DUCT SUPPORT AT 10'-0" MAX.		INSTALLATION DETAILS					
		BRACE DIRECTION/SPACING			HANGER ATTACHMENT TYPE		BRACE ATTACHMENT TYPE
		TRANS./ 10 FT	LONG./ 20 FT	ALL-DIR./ 20 FT	TRANS./LONG. BRACE LOCATION	ALL-DIR. BRACE LOCATION	
DUCT WEIGHT (LBS/FT)	10	D6.10	D6.11	D6.12	38A	38A	38A
	20	D6.10	D6.11	D6.12	38C	38C	38B
	30	D6.10	D6.11	D6.12	38D	38D	38C
	40	D6.20	D6.21	D6.22	50E	50E	50D
	50	D6.20	D6.21	D6.22	50E	50E	50E
	60	D6.20	D6.21	D6.22	50F	50F	50E

REVIEWED FOR CODE COMPLIANCE
OPM-0043
BY William Staehlin
DATE: 1/23/2023
CALIFORNIA BUILDING CODE 2022

MASON WEST
1601 E. Miraloma Ave. Placentia, CA 92870
TEL (714) 630 - 0701, www.masonwest.com

Jiefu "Jeff" Zhang, SE
California SE No. S5270

ROUND DUCT	SEISMIC CABLE BRACING INSTALLATION REQUIREMENTS	LATERAL FORCE Fp = 1.0g (ASD) VERTICAL FORCE Fpv = 0.375g (ASD)

Fp = 1g Fpv = 0.375g		STANDARD CABLE BRACING FOR 458BRACE ANGLE BRACE SPACING - OPTION #1					
DUCT SUPPORT AT 10'-0" MAX.		INSTALLATION DETAILS					
		BRACE DIRECTION/SPACING			HANGER ATTACHMENT TYPE		BRACE ATTACHMENT TYPE
		TRANS./ 20 FT	LONG./ 40 FT	ALL-DIR./ 40 FT	TRANS./LONG. BRACE LOCATION	ALL-DIR. BRACE LOCATION	
DUCT WEIGHT (LBS/FT)	10	D6.10	D6.11	D6.12	38A	38A	38D
	20	D6.20	D6.21	D6.22	50C	50C	50F

Fp = 1g Fpv = 0.375g		STANDARD CABLE BRACING FOR 458BRACE ANGLE BRACE SPACING - OPTION #2					
DUCT SUPPORT AT 10'-0" MAX.		INSTALLATION DETAILS					
		BRACE DIRECTION/SPACING			HANGER ATTACHMENT TYPE		BRACE ATTACHMENT TYPE
		TRANS./ 10 FT	LONG./ 20 FT	ALL-DIR./ 20 FT	TRANS./LONG. BRACE LOCATION	ALL-DIR. BRACE LOCATION	
DUCT WEIGHT (LBS/FT)	10	D6.10	D6.11	D6.12	38A	38A	38B
	20	D6.10	D6.11	D6.12	38C	38C	38D
	30	D6.20	D6.21	D6.22	50D	50D	50E
	40	D6.20	D6.21	D6.22	50E	50E	50F
	50	D6.20	D6.21	D6.22	50E	50E	50G

REVIEWED FOR CODE COMPLIANCE
HCAI
OPM-0043
BY: William Staehlin
DATE: 01/23/2023
CALIFORNIA BUILDING CODE, 2022

MASON WEST
1601 E. Miraloma Ave. Placentia, CA 92870
TEL (714) 630 - 0701, www.masonwest.com

Jiefu "Jeff" Zhang, SE
California SE No. S5270

PAGE
B3.5

ROUND
DUCT

SEISMIC CABLE X-PATTERN BRACING INSTALLATION REQUIREMENTS

LATERAL FORCE
Fp = 0.25g (ASD)
VERTICAL FORCE
Fpv = 0.375g (ASD)

Fp = 0.25g Fpv = 0.375g		X-PATTERN CABLE BRACING FOR 458BRACE ANGLE BRACE SPACING - OPTION #1		
DUCT SUPPORT AT 10'-0" MAX.		INSTALLATION DETAILS		
		BRACE SPACING 30 FT	HANGER ATTACHMENT TYPE	BRACE ATTACHMENT TYPE
DUCT WEIGHT (LBS/FT)	10	D7.10	38A	38B
	20	D7.10	38C	38C
	30	D7.10	38D	38D
	40	D7.12	63E	50E
	50	D7.12	63E	50F
	60	D7.12	63F	50G

Fp = 0.25g Fpv = 0.375g		X-PATTERN CABLE BRACING FOR 458BRACE ANGLE BRACE SPACING - OPTION #2		
DUCT SUPPORT AT 10'-0" MAX.		INSTALLATION DETAILS		
		BRACE SPACING 20 FT	HANGER ATTACHMENT TYPE	BRACE ATTACHMENT TYPE
DUCT WEIGHT (LBS/FT)	10	D7.10	38A	38A
	20	D7.10	38C	38B
	30	D7.10	38D	38C
	40	D7.12	63E	50D
	50	D7.12	63E	50E
	60	D7.12	63F	50E

Fp = 0.25g Fpv = 0.375g		X-PATTERN CABLE BRACING FOR 458BRACE ANGLE BRACE SPACING - OPTION #3		
DUCT SUPPORT AT 10'-0" MAX.		INSTALLATION DETAILS		
		BRACE SPACING 10 FT	HANGER ATTACHMENT TYPE	BRACE ATTACHMENT TYPE
DUCT WEIGHT (LBS/FT)	10	D7.10	38A	38A
	20	D7.10	38C	38A
	30	D7.10	38D	38B
	40	D7.12	63E	50B
	50	D7.12	63E	50C
	60	D7.12	63F	50C

HCAI
OPM-0043
REVIEWED FOR CODE COMPLIANCE
BY: William Staehlin
DATE: CALIFORNIA BUILDING CODE 2022

MASON WEST
1601 E. Miraloma Ave. Placentia, CA 92870
TEL (714) 630 - 0701, www.masonwest.com

Jiefu "Jeff" Zhang, SE
California SE No. S5270

ROUND DUCT	SEISMIC CABLE X-PATTERN BRACING INSTALLATION REQUIREMENTS	LATERAL FORCE Fp = 0.5g (ASD) VERTICAL FORCE Fpv = 0.375g (ASD)

Fp = 0.5g Fpv = 0.375g		X-PATTERN CABLE BRACING FOR 458BRACE ANGLE BRACE SPACING - OPTION #1		
DUCT SUPPORT AT 10'-0" MAX.		INSTALLATION DETAILS		
		BRACE SPACING 30 FT	HANGER ATTACHMENT TYPE	BRACE ATTACHMENT TYPE
DUCT WEIGHT (LBS/FT)	10	D7.10	38A	38C
	20	D7.11	50C	50E
	30	D7.11	50D	50G

Fp = 0.5g Fpv = 0.375g		X-PATTERN CABLE BRACING FOR 458BRACE ANGLE BRACE SPACING - OPTION #2		
DUCT SUPPORT AT 10'-0" MAX.		INSTALLATION DETAILS		
		BRACE SPACING 20 FT	HANGER ATTACHMENT TYPE	BRACE ATTACHMENT TYPE
DUCT WEIGHT (LBS/FT)	10	D7.10	38A	38B
	20	D7.10	38C	38D
	30	D7.11	50D	50E
	40	D7.12	63E	50F
	50	D7.12	63E	50G

Fp = 0.5g Fpv = 0.375g		X-PATTERN CABLE BRACING FOR 458BRACE ANGLE BRACE SPACING - OPTION #3		
DUCT SUPPORT AT 10'-0" MAX.		INSTALLATION DETAILS		
		BRACE SPACING 10 FT	HANGER ATTACHMENT TYPE	BRACE ATTACHMENT TYPE
DUCT WEIGHT (LBS/FT)	10	D7.10	38A	38A
	20	D7.10	38C	38B
	30	D7.10	38D	38C
	40	D7.12	63E	50D
	50	D7.12	63E	50E
	60	D7.12	63F	50E

REVIEWED FOR CODE COMPLIANCE
HCAI
OPM-0043
BY: William Staehlin
DATE: 01/23/2023
CALIFORNIA BUILDING CODE 2022

MASON WEST
1601 E. Miraloma Ave. Placentia, CA 92870
TEL (714) 630 - 0701, www.masonwest.com

Jiefu "Jeff" Zhang, SE
California SE No. S5270

ROUND DUCT	SEISMIC CABLE X-PATTERN BRACING INSTALLATION REQUIREMENTS	LATERAL FORCE Fp = 1.0g (ASD) VERTICAL FORCE Fpv = 0.375g (ASD)

Fp = 1g Fpv = 0.375g		X-PATTERN CABLE BRACING FOR 458BRACE ANGLE BRACE SPACING - OPTION #1		
DUCT SUPPORT AT 10'-0" MAX.		INSTALLATION DETAILS		
		BRACE SPACING 25 FT	HANGER ATTACHMENT TYPE	BRACE ATTACHMENT TYPE
DUCT WEIGHT (LBS/FT)	10	D7.10	38A	38E
	20	D7.11	50C	50G

Fp = 1g Fpv = 0.375g		X-PATTERN CABLE BRACING FOR 458BRACE ANGLE BRACE SPACING - OPTION #2		
DUCT SUPPORT AT 10'-0" MAX.		INSTALLATION DETAILS		
		BRACE SPACING 15 FT	HANGER ATTACHMENT TYPE	BRACE ATTACHMENT TYPE
DUCT WEIGHT (LBS/FT)	10	D7.10	38A	38C
	20	D7.11	50C	50E
	30	D7.11	50D	50G

Fp = 1g Fpv = 0.375g		X-PATTERN CABLE BRACING FOR 458BRACE ANGLE BRACE SPACING - OPTION #3		
DUCT SUPPORT AT 10'-0" MAX.		INSTALLATION DETAILS		
		BRACE SPACING 10 FT	HANGER ATTACHMENT TYPE	BRACE ATTACHMENT TYPE
DUCT WEIGHT (LBS/FT)	10	D7.10	38A	38B
	20	D7.10	38C	38D
	30	D7.11	50D	50E
	40	D7.12	63E	50F
	50	D7.12	63E	50G

REVIEWED FOR CODE COMPLIANCE
HCAI
OPM-0043
BY: William Staehlin
DATE: 01/23/2023
CALIFORNIA BUILDING CODE 2022

MASON WEST
1601 E. Miraloma Ave. Placentia, CA 92870
TEL (714) 630 - 0701, www.masonwest.com

Jiefu "Jeff" Zhang, SE
California SE No. S5270

PAGE
B3.8

FACTORY BUILT DUCT

SEISMIC SOLID BRACING INSTALLATION REQUIREMENTS

LATERAL FORCE
Fp = 0.25g (ASD)
VERTICAL FORCE
Fpv = 0.375g (ASD)

Fp = 0.25g Fpv = 0.375g		SOLID (RIGID) BRACING FOR 458BRACE ANGLE BRACE SPACING - OPTION #1					
DUCT SUPPORT AT 10'-0" MAX.		INSTALLATION DETAILS					
		BRACE DIRECTION/SPACING			HANGER ATTACHMENT TYPE		BRACE ATTACHMENT TYPE
		TRANS./ 30 FT	LONG./ 60 FT	ALL-DIR./ 60 FT	TRANS./LONG. BRACE LOCATION	ALL-DIR. BRACE LOCATION	
DUCT WEIGHT (LBS/FT)	10	D3.10	D3.11	D3.12	38C	38E	50B
	20	D3.10	D3.11	D3.12	38E	38G	50C
	30	D3.10	D3.11	D3.12	38F	38J	50D
	40	D3.20	D3.21	D3.22	50H	50L	50E
	50	D3.20	D3.21	D3.22	50J	50M	50F

Fp = 0.25g Fpv = 0.375g		SOLID (RIGID) BRACING FOR 458BRACE ANGLE BRACE SPACING - OPTION #2					
DUCT SUPPORT AT 10'-0" MAX.		INSTALLATION DETAILS					
		BRACE DIRECTION/SPACING			HANGER ATTACHMENT TYPE		BRACE ATTACHMENT TYPE
		TRANS./ 30 FT	LONG./ 60 FT	ALL-DIR./ 60 FT	TRANS./LONG. BRACE LOCATION	ALL-DIR. BRACE LOCATION	
DUCT WEIGHT (LBS/FT)	10	D3.10	D3.11	D3.12	38C	38E	50B
	20	D3.10	D3.11	D3.12	38E	38G	50C
	30	D3.10	D3.11	D3.12	38F	38J	50D
	40	D3.20	D3.21	D3.22	50H	50L	50E
	50	D3.20	D3.21	D3.22	50J	50M	50F
	60	D3.20	D3.21	D3.22	50K	50N	50G

Fp = 0.25g Fpv = 0.375g		SOLID (RIGID) BRACING FOR 458BRACE ANGLE BRACE SPACING - OPTION #3					
DUCT SUPPORT AT 10'-0" MAX.		INSTALLATION DETAILS					
		BRACE DIRECTION/SPACING			HANGER ATTACHMENT TYPE		BRACE ATTACHMENT TYPE
		TRANS./ 20 FT	LONG./ 40 FT	ALL-DIR./ 40 FT	TRANS./LONG. BRACE LOCATION	ALL-DIR. BRACE LOCATION	
DUCT WEIGHT (LBS/FT)	10	D3.10	D3.11	D3.12	38B	38D	50A
	20	D3.10	D3.11	D3.12	38D	38F	50B
	30	D3.10	D3.11	D3.12	38F	38H	50C
	40	D3.20	D3.21	D3.22	50G	50J	50D
	50	D3.20	D3.21	D3.22	50H	50L	50E
	60	D3.20	D3.21	D3.22	50J	50M	50E

REVIEWED FOR CODE COMPLIANCE
OPM-0043
BY William Staehlin
DATE: 1/23/2023
CALIFORNIA BUILDING CODE 2022

MASON WEST
1601 E. Miraloma Ave. Placentia, CA 92870
TEL (714) 630 - 0701, www.masonwest.com

Jiefu "Jeff" Zhang, SE
California SE No. S5270

PAGE
B4.0

FACTORY BUILT DUCT	SEISMIC SOLID BRACING INSTALLATION REQUIREMENTS	LATERAL FORCE Fp = 0.5g (ASD) VERTICAL FORCE Fpv = 0.375g (ASD)

Fp = 0.5g Fpv = 0.375g		SOLID (RIGID) BRACING FOR 458BRACE ANGLE BRACE SPACING - OPTION #1					
DUCT SUPPORT AT 10'-0" MAX.		INSTALLATION DETAILS					
		BRACE DIRECTION/SPACING			HANGER ATTACHMENT TYPE		BRACE ATTACHMENT TYPE
		TRANS./ 30 FT	LONG./ 60 FT	ALL-DIR./ 60 FT	TRANS./LONG. BRACE LOCATION	ALL-DIR. BRACE LOCATION	
DUCT WEIGHT (LBS/FT)	10	D3.10	D3.11	D3.12	38D	38G	50C
	20	D3.10	D3.11	D3.12	38F	38K	50E
	30	D3.20	D3.21	D3.22	50H	50M	50G

Fp = 0.5g Fpv = 0.375g		SOLID (RIGID) BRACING FOR 458BRACE ANGLE BRACE SPACING - OPTION #2					
DUCT SUPPORT AT 10'-0" MAX.		INSTALLATION DETAILS					
		BRACE DIRECTION/SPACING			HANGER ATTACHMENT TYPE		BRACE ATTACHMENT TYPE
		TRANS./ 20 FT	LONG./ 40 FT	ALL-DIR./ 40 FT	TRANS./LONG. BRACE LOCATION	ALL-DIR. BRACE LOCATION	
DUCT WEIGHT (LBS/FT)	10	D3.10	D3.11	D3.12	38C	38F	50B
	20	D3.10	D3.11	D3.12	38E	38J	50D
	30	D3.10	D3.11	D3.12	38G	38L	50E
	40	D3.20	D3.21	D3.22	50H	50M	50F
	50	D3.20	D3.21	D3.22	50J	50N	50G

Fp = 0.5g Fpv = 0.375g		SOLID (RIGID) BRACING FOR 458BRACE ANGLE BRACE SPACING - OPTION #3					
DUCT SUPPORT AT 10'-0" MAX.		INSTALLATION DETAILS					
		BRACE DIRECTION/SPACING			HANGER ATTACHMENT TYPE		BRACE ATTACHMENT TYPE
		TRANS./ 10 FT	LONG./ 20 FT	ALL-DIR./ 20 FT	TRANS./LONG. BRACE LOCATION	ALL-DIR. BRACE LOCATION	
DUCT WEIGHT (LBS/FT)	10	D3.10	D3.11	D3.12	38B	38D	50A
	20	D3.10	D3.11	D3.12	38D	38F	50B
	30	D3.10	D3.11	D3.12	38F	38H	50C
	40	D3.20	D3.21	D3.22	50G	50J	50D
	50	D3.20	D3.21	D3.22	50H	50L	50E
	60	D3.20	D3.21	D3.22	50J	50M	50E

REVIEWED FOR CODE COMPLIANCE OPM-0043 BY William Staehlin DATE: 1/23/2023 CALIFORNIA BUILDING CODE 2022

MASON WEST
1601 E. Miraloma Ave. Placentia, CA 92870
TEL (714) 630 - 0701, www.masonwest.com

Jiefu "Jeff" Zhang, SE
California SE No. S5270

FACTORY BUILT DUCT	SEISMIC SOLID BRACING INSTALLATION REQUIREMENTS	LATERAL FORCE Fp = 1.0g (ASD) VERTICAL FORCE Fpv = 0.375g (ASD)

Fp = 1g Fpv = 0.375g		SOLID (RIGID) BRACING FOR 458BRACE ANGLE BRACE SPACING - OPTION #1					
DUCT SUPPORT AT 10'-0" MAX.		INSTALLATION DETAILS					
		BRACE DIRECTION/SPACING			HANGER ATTACHMENT TYPE		BRACE ATTACHMENT TYPE
		TRANS./ 20 FT	LONG./ 40 FT	ALL-DIR./ 40 FT	TRANS./LONG. BRACE LOCATION	ALL-DIR. BRACE LOCATION	
DUCT WEIGHT (LBS/FT)	10	D3.10	D3.11	D3.12	38E	38H	50D
	20	D3.10	D3.11	D3.22	38G	50M	50F

Fp = 1g Fpv = 0.375g		SOLID (RIGID) BRACING FOR 458BRACE ANGLE BRACE SPACING - OPTION #2					
DUCT SUPPORT AT 10'-0" MAX.		INSTALLATION DETAILS					
		BRACE DIRECTION/SPACING			HANGER ATTACHMENT TYPE		BRACE ATTACHMENT TYPE
		TRANS./ 15 FT	LONG./ 30 FT	ALL-DIR./ 30 FT	TRANS./LONG. BRACE LOCATION	ALL-DIR. BRACE LOCATION	
DUCT WEIGHT (LBS/FT)	10	D3.10	D3.11	D3.12	38D	38G	50C
	20	D3.10	D3.11	D3.12	38F	38K	50E
	30	D3.20	D3.21	D3.22	50H	50M	50G

Fp = 1g Fpv = 0.375g		SOLID (RIGID) BRACING FOR 458BRACE ANGLE BRACE SPACING - OPTION #3					
DUCT SUPPORT AT 10'-0" MAX.		INSTALLATION DETAILS					
		BRACE DIRECTION/SPACING			HANGER ATTACHMENT TYPE		BRACE ATTACHMENT TYPE
		TRANS./ 10 FT	LONG./ 20 FT	ALL-DIR./ 20 FT	TRANS./LONG. BRACE LOCATION	ALL-DIR. BRACE LOCATION	
DUCT WEIGHT (LBS/FT)	10	D3.10	D3.11	D3.12	38C	38F	50B
	20	D3.10	D3.11	D3.12	38E	38J	50D
	30	D3.10	D3.11	D3.12	38G	38L	50E
	40	D3.20	D3.21	D3.22	50H	50M	50F
	50	D3.20	D3.21	D3.22	50J	50N	50G

REVIEWED FOR CODE COMPLIANCE
OPM-0043
DATE: 01/23/2023
CALIFORNIA BUILDING CODE 2022

MASON WEST
1601 E. Miraloma Ave. Placentia, CA 92870
TEL (714) 630 - 0701, www.masonwest.com

Jiefu "Jeff" Zhang, SE
California SE No. S5270

FACTORY BUILT DUCT

SEISMIC CABLE BRACING INSTALLATION REQUIREMENTS

LATERAL FORCE
Fp = 0.25g (ASD)
VERTICAL FORCE
Fpv = 0.375g (ASD)

Fp = 0.25g Fpv = 0.375g		STANDARD CABLE BRACING FOR 45ºBRACE ANGLE BRACE SPACING - OPTION #1					
DUCT SUPPORT AT 10'-0" MAX.		INSTALLATION DETAILS					
		BRACE DIRECTION/SPACING			HANGER ATTACHMENT TYPE		BRACE ATTACHMENT TYPE
		TRANS./ 30 FT	LONG./ 60 FT	ALL-DIR./ 60 FT	TRANS./LONG. BRACE LOCATION	ALL-DIR. BRACE LOCATION	
DUCT WEIGHT (LBS/FT)	10	D8.10	D8.11	D8.12	38A	38A	38B
	20	D8.10	D8.11	D8.12	38C	38C	38C
	30	D8.10	D8.11	D8.12	38D	38D	38D
	40	D8.20	D8.21		50E		50E
	50	D8.20	D8.21		50E		50F
	60	D8.20	D8.21		50F		50G

Fp = 0.25g Fpv = 0.375g		STANDARD CABLE BRACING FOR 45ºBRACE ANGLE BRACE SPACING - OPTION #2					
DUCT SUPPORT AT 10'-0" MAX.		INSTALLATION DETAILS					
		BRACE DIRECTION/SPACING			HANGER ATTACHMENT TYPE		BRACE ATTACHMENT TYPE
		TRANS./ 30 FT	LONG./ 60 FT	ALL-DIR./ 60 FT	TRANS./LONG. BRACE LOCATION	ALL-DIR. BRACE LOCATION	
DUCT WEIGHT (LBS/FT)	10	D8.10	D8.11	D8.12	38A	38A	38B
	20	D8.10	D8.11	D8.12	38C	38C	38C
	30	D8.10	D8.11	D8.12	38D	38D	38D
	40	D8.20	D8.21		50E		50E
	50	D8.20	D8.21		50E		50F
	60	D8.20	D8.21		50F		50G

Fp = 0.25g Fpv = 0.375g		STANDARD CABLE BRACING FOR 45ºBRACE ANGLE BRACE SPACING - OPTION #3					
DUCT SUPPORT AT 10'-0" MAX.		INSTALLATION DETAILS					
		BRACE DIRECTION/SPACING			HANGER ATTACHMENT TYPE		BRACE ATTACHMENT TYPE
		TRANS./ 20 FT	LONG./ 40 FT	ALL-DIR./ 40 FT	TRANS./LONG. BRACE LOCATION	ALL-DIR. BRACE LOCATION	
DUCT WEIGHT (LBS/FT)	10	D8.10	D8.11	D8.12	38A	38A	38A
	20	D8.10	D8.11	D8.12	38C	38C	38B
	30	D8.10	D8.11	D8.12	38D	38D	38C
	40	D8.20	D8.21	D8.22	50E	50E	50D
	50	D8.20	D8.21	D8.22	50E	50E	50E
	60	D8.20	D8.21		50F		50E

REVIEWED FOR CODE COMPLIANCE
HCAI
OPM-0043
BY: William Staehlin
DATE: 1/23/2023
CALIFORNIA BUILDING CODE 2022

MASON WEST
1601 E. Miraloma Ave. Placentia, CA 92870
TEL (714) 630 - 0701, www.masonwest.com

Jiefu "Jeff" Zhang, SE
California SE No. S5270

FACTORY BUILT DUCT

SEISMIC CABLE BRACING INSTALLATION REQUIREMENTS

LATERAL FORCE
Fp = 0.5g (ASD)
VERTICAL FORCE
Fpv = 0.375g (ASD)

Fp = 0.5g Fpv = 0.375g		STANDARD CABLE BRACING FOR 458BRACE ANGLE BRACE SPACING - OPTION #1					
DUCT SUPPORT AT 10'-0" MAX.		INSTALLATION DETAILS					
		BRACE DIRECTION/SPACING			HANGER ATTACHMENT TYPE		BRACE ATTACHMENT TYPE
		TRANS./ 30 FT	LONG./ 60 FT	ALL-DIR./ 60 FT	TRANS./LONG. BRACE LOCATION	ALL-DIR. BRACE LOCATION	
DUCT WEIGHT (LBS/FT)	10	D8.10	D8.11	D8.12	38A	38A	38C
	20	D8.20	D8.21		50C		50E
	30	D8.20	D8.21		50D		50G
	40						
	50						
	60						

Fp = 0.5g Fpv = 0.375g		STANDARD CABLE BRACING FOR 458BRACE ANGLE BRACE SPACING - OPTION #2					
DUCT SUPPORT AT 10'-0" MAX.		INSTALLATION DETAILS					
		BRACE DIRECTION/SPACING			HANGER ATTACHMENT TYPE		BRACE ATTACHMENT TYPE
		TRANS./ 20 FT	LONG./ 40 FT	ALL-DIR./ 40 FT	TRANS./LONG. BRACE LOCATION	ALL-DIR. BRACE LOCATION	
DUCT WEIGHT (LBS/FT)	10	D8.10	D8.11	D8.12	38A	38A	38B
	20	D8.10	D8.11	D8.12	38C	38C	38D
	30	D8.20	D8.21		50D		50E
	40	D8.20	D8.21		50E		50F
	50	D8.20	D8.21		50E		50G

Fp = 0.5g Fpv = 0.375g		STANDARD CABLE BRACING FOR 458BRACE ANGLE BRACE SPACING - OPTION #3					
DUCT SUPPORT AT 10'-0" MAX.		INSTALLATION DETAILS					
		BRACE DIRECTION/SPACING			HANGER ATTACHMENT TYPE		BRACE ATTACHMENT TYPE
		TRANS./ 10 FT	LONG./ 20 FT	ALL-DIR./ 20 FT	TRANS./LONG. BRACE LOCATION	ALL-DIR. BRACE LOCATION	
DUCT WEIGHT (LBS/FT)	10	D8.10	D8.11	D8.12	38A	38A	38A
	20	D8.10	D8.11	D8.12	38C	38C	38B
	30	D8.10	D8.11	D8.12	38D	38D	38C
	40	D8.20	D8.21	D8.22	50E	50E	50D
	50	D8.20	D8.21	D8.22	50E	50E	50E
	60	D8.20	D8.21		50F		50E

REVIEWED FOR CODE COMPLIANCE
OPM-0043
BY: William Staehlin
DATE: 01/23/2023
CALIFORNIA BUILDING CODE 2022

MASON WEST
1601 E. Miraloma Ave. Placentia, CA 92870
TEL (714) 630 - 0701, www.masonwest.com

Jiefu "Jeff" Zhang, SE
California SE No. S5270

FACTORY BUILT DUCT	SEISMIC CABLE BRACING INSTALLATION REQUIREMENTS	LATERAL FORCE Fp = 1.0g (ASD) VERTICAL FORCE Fpv = 0.375g (ASD)

Fp = 1g Fpv = 0.375g		STANDARD CABLE BRACING FOR 458BRACE ANGLE BRACE SPACING - OPTION #1					
DUCT SUPPORT AT 10'-0" MAX.		INSTALLATION DETAILS					
		BRACE DIRECTION/SPACING			HANGER ATTACHMENT TYPE		BRACE ATTACHMENT TYPE
		TRANS./ 20 FT	LONG./ 40 FT	ALL-DIR./ 40 FT	TRANS./LONG. BRACE LOCATION	ALL-DIR. BRACE LOCATION	
DUCT WEIGHT (LBS/FT)	10	D8.10	D8.11	D8.12	38A	38A	38D
	20	D8.20	D8.21		50C		50F

Fp = 1g Fpv = 0.375g		STANDARD CABLE BRACING FOR 458BRACE ANGLE BRACE SPACING - OPTION #2					
DUCT SUPPORT AT 10'-0" MAX.		INSTALLATION DETAILS					
		BRACE DIRECTION/SPACING			HANGER ATTACHMENT TYPE		BRACE ATTACHMENT TYPE
		TRANS./ 15 FT	LONG./ 30 FT	ALL-DIR./ 30 FT	TRANS./LONG. BRACE LOCATION	ALL-DIR. BRACE LOCATION	
DUCT WEIGHT (LBS/FT)	10	D8.10	D8.11	D8.12	38A	38A	38C
	20	D8.20	D8.21		50C		50E
	30	D8.20	D8.21		50D		50G

Fp = 1g Fpv = 0.375g		STANDARD CABLE BRACING FOR 458BRACE ANGLE BRACE SPACING - OPTION #3					
DUCT SUPPORT AT 10'-0" MAX.		INSTALLATION DETAILS					
		BRACE DIRECTION/SPACING			HANGER ATTACHMENT TYPE		BRACE ATTACHMENT TYPE
		TRANS./ 10 FT	LONG./ 20 FT	ALL-DIR./ 20 FT	TRANS./LONG. BRACE LOCATION	ALL-DIR. BRACE LOCATION	
DUCT WEIGHT (LBS/FT)	10	D8.10	D8.11	D8.12	38A	38A	38B
	20	D8.10	D8.11	D8.12	38C	38C	38D
	30	D8.20	D8.21		50D		50E
	40	D8.20	D8.21		50E		50F
	50	D8.20	D8.21		50E		50G

REVIEWED FOR CODE COMPLIANCE
OPM-0043
BY William Staehlin
DATE: 01/23/2023
CALIFORNIA BUILDING CODE 2022

MASON WEST
1601 E. Miraloma Ave. Placentia, CA 92870
TEL (714) 630 - 0701, www.masonwest.com

Jiefu "Jeff" Zhang, SE
California SE No. S5270

CABLE TRAY	SEISMIC SOLID BRACING INSTALLATION REQUIREMENTS	LATERAL FORCE Fp = 0.25g (ASD) VERTICAL FORCE Fpv = 0.375g (ASD)

Fp = 0.25g Fpv = 0.375g		SOLID (RIGID) BRACING FOR 458BRACE ANGLE BRACE SPACING - OPTION #1					
ELECTRICAL TRAY SUPPORT AT 10'-0" MAX.		INSTALLATION DETAILS					
		BRACE DIRECTION/SPACING			HANGER ATTACHMENT TYPE		BRACE ATTACHMENT TYPE
		TRANS./ 40 FT	LONG./ 80 FT	ALL-DIR./ 80 FT	TRANS./LONG. BRACE LOCATION	ALL-DIR. BRACE LOCATION	
WEIGHT (LBS/FT)	10	E1.10	E1.11	E1.12	38C	38F	50B
	20	E1.10	E1.11	E1.12	38E	38J	50D
	30	E1.20	E1.21	E1.22	50G	50L	50E
	40	E1.20	E1.21	E1.22	50H	50M	50F
	45	E1.20	E1.21	E1.22	50J	50M	50G
	50	E1.30	E1.31	E1.32	63J	63N	63G

Fp = 0.25g Fpv = 0.375g		SOLID (RIGID) BRACING FOR 458BRACE ANGLE BRACE SPACING - OPTION #2					
ELECTRICAL TRAY SUPPORT AT 10'-0" MAX.		INSTALLATION DETAILS					
		BRACE DIRECTION/SPACING			HANGER ATTACHMENT TYPE		BRACE ATTACHMENT TYPE
		TRANS./ 30 FT	LONG./ 60 FT	ALL-DIR./ 60 FT	TRANS./LONG. BRACE LOCATION	ALL-DIR. BRACE LOCATION	
WEIGHT (LBS/FT)	10	E1.10	E1.11	E1.12	38C	38E	50B
	20	E1.10	E1.11	E1.12	38E	38G	50C
	30	E1.20	E1.21	E1.22	50F	50J	50D
	40	E1.20	E1.21	E1.22	50H	50L	50E
	45	E1.20	E1.21	E1.22	50H	50M	50E
	50	E1.30	E1.31	E1.32	63J	63M	63F
	60	E1.30	E1.31	E1.32	63K	63N	63G
	70	E1.30	E1.31	E1.32	63L	63N	63G

Fp = 0.25g Fpv = 0.375g		SOLID (RIGID) BRACING FOR 458BRACE ANGLE BRACE SPACING - OPTION #3					
ELECTRICAL TRAY SUPPORT AT 10'-0" MAX.		INSTALLATION DETAILS					
		BRACE DIRECTION/SPACING			HANGER ATTACHMENT TYPE		BRACE ATTACHMENT TYPE
		TRANS./ 20 FT	LONG./ 40 FT	ALL-DIR./ 40 FT	TRANS./LONG. BRACE LOCATION	ALL-DIR. BRACE LOCATION	
WEIGHT (LBS/FT)	10	E1.10	E1.11	E1.12	38B	38D	50A
	20	E1.10	E1.11	E1.12	38D	38F	50B
	30	E1.20	E1.21	E1.22	50F	50H	50C
	40	E1.20	E1.21	E1.22	50G	50J	50D
	45	E1.20	E1.21	E1.22	50G	50K	50D
	50	E1.30	E1.31	E1.32	63H	63L	63E
	60	E1.30	E1.31	E1.32	63J	63M	63E
	70	E1.30	E1.31	E1.32	63J	63M	63F
	80	E1.30	E1.31	E1.32	63K	63N	63F
	85	E1.30	E1.31	E1.32	63L	63N	63F

REVIEWED FOR CODE COMPLIANCE
OPM-0043
Reviewed by William Staehlin
DATE: 1/23/2023
CALIFORNIA BUILDING CODE 2022

MASON WEST
1601 E. Miraloma Ave. Placentia, CA 92870
TEL (714) 630 - 0701, www.masonwest.com

Jiefu "Jeff" Zhang, SE
California SE No. S5270

PAGE
B5.0

CABLE TRAY	SEISMIC SOLID BRACING INSTALLATION REQUIREMENTS	LATERAL FORCE Fp = 0.5g (ASD) VERTICAL FORCE Fpv = 0.375g (ASD)

Fp = 0.5g Fpv = 0.375g		SOLID (RIGID) BRACING FOR 458BRACE ANGLE BRACE SPACING - OPTION #1					
ELECTRICAL TRAY SUPPORT AT 10'-0" MAX.		INSTALLATION DETAILS					
		BRACE DIRECTION/SPACING			HANGER ATTACHMENT TYPE		BRACE ATTACHMENT TYPE
		TRANS./ 30 FT	LONG./ 60 FT	ALL-DIR./ 60 FT	TRANS./LONG. BRACE LOCATION	ALL-DIR. BRACE LOCATION	
WEIGHT (LBS/FT)	10	E1.10	E1.11	E1.12	38D	38G	50C
	20	E1.10	E1.11	E1.12	38F	38K	50E
	30	E1.20	E1.21	E1.22	50H	50M	50G

Fp = 0.5g Fpv = 0.375g		SOLID (RIGID) BRACING FOR 458BRACE ANGLE BRACE SPACING - OPTION #2					
ELECTRICAL TRAY SUPPORT AT 10'-0" MAX.		INSTALLATION DETAILS					
		BRACE DIRECTION/SPACING			HANGER ATTACHMENT TYPE		BRACE ATTACHMENT TYPE
		TRANS./ 20 FT	LONG./ 40 FT	ALL-DIR./ 40 FT	TRANS./LONG. BRACE LOCATION	ALL-DIR. BRACE LOCATION	
WEIGHT (LBS/FT)	10	E1.10	E1.11	E1.12	38C	38F	50B
	20	E1.10	E1.11	E1.12	38E	38J	50D
	30	E1.20	E1.21	E1.22	50G	50L	50E
	40	E1.20	E1.21	E1.22	50H	50M	50F
	45	E1.20	E1.21	E1.22	50J	50M	50G
	50	E1.30	E1.31	E1.32	63J	63N	63G

Fp = 0.5g Fpv = 0.375g		SOLID (RIGID) BRACING FOR 458BRACE ANGLE BRACE SPACING - OPTION #3					
ELECTRICAL TRAY SUPPORT AT 10'-0" MAX.		INSTALLATION DETAILS					
		BRACE DIRECTION/SPACING			HANGER ATTACHMENT TYPE		BRACE ATTACHMENT TYPE
		TRANS./ 10 FT	LONG./ 20 FT	ALL-DIR./ 20 FT	TRANS./LONG. BRACE LOCATION	ALL-DIR. BRACE LOCATION	
WEIGHT (LBS/FT)	10	E1.10	E1.11	E1.12	38B	38D	50A
	20	E1.10	E1.11	E1.12	38D	38F	50B
	30	E1.20	E1.21	E1.22	50F	50H	50C
	40	E1.20	E1.21	E1.22	50G	50J	50D
	45	E1.20	E1.21	E1.22	50G	50K	50D
	50	E1.30	E1.31	E1.32	63H	63L	63E
	60	E1.30	E1.31	E1.32	63J	63M	63E
	70	E1.30	E1.31	E1.32	63J	63M	63F
	80	E1.30	E1.31	E1.32	63K	63N	63F
	85	E1.30	E1.31	E1.32	63L	63N	63F

REVIEWED FOR CODE COMPLIANCE
OPM 0043
William Staehlin
DATE: 01/23/2023
CALIFORNIA BUILDING CODE, 2022

MASON WEST
1601 E. Miraloma Ave. Placentia, CA 92870
TEL (714) 630 - 0701, www.masonwest.com

Jiefu "Jeff" Zhang, SE
California SE No. S5270

PAGE
B5.1

CABLE TRAY	SEISMIC SOLID BRACING INSTALLATION REQUIREMENTS	LATERAL FORCE Fp = 1.0g (ASD) VERTICAL FORCE Fpv = 0.375g (ASD)

Fp = 1g Fpv = 0.375g		SOLID (RIGID) BRACING FOR 458BRACE ANGLE BRACE SPACING - OPTION #1					
ELECTRICAL TRAY SUPPORT AT 10'-0" MAX.		INSTALLATION DETAILS					
		BRACE DIRECTION/SPACING			HANGER ATTACHMENT TYPE		BRACE ATTACHMENT TYPE
		TRANS./ 20 FT	LONG./ 40 FT	ALL-DIR./ 40 FT	TRANS./LONG. BRACE LOCATION	ALL-DIR. BRACE LOCATION	
WEIGHT (LBS/FT)	10	E1.10	E1.11	E1.12	38E	38H	50D
	20	E1.10	E1.11	E1.22	38G	50M	50F

Fp = 1g Fpv = 0.375g		SOLID (RIGID) BRACING FOR 458BRACE ANGLE BRACE SPACING - OPTION #2					
ELECTRICAL TRAY SUPPORT AT 10'-0" MAX.		INSTALLATION DETAILS					
		BRACE DIRECTION/SPACING			HANGER ATTACHMENT TYPE		BRACE ATTACHMENT TYPE
		TRANS./ 15 FT	LONG./ 30 FT	ALL-DIR./ 30 FT	TRANS./LONG. BRACE LOCATION	ALL-DIR. BRACE LOCATION	
WEIGHT (LBS/FT)	10	E1.10	E1.11	E1.12	38D	38G	50C
	20	E1.10	E1.11	E1.12	38F	38K	50E
	30	E1.20	E1.21	E1.22	50H	50M	50G

Fp = 1g Fpv = 0.375g		SOLID (RIGID) BRACING FOR 458BRACE ANGLE BRACE SPACING - OPTION #3					
ELECTRICAL TRAY SUPPORT AT 10'-0" MAX.		INSTALLATION DETAILS					
		BRACE DIRECTION/SPACING			HANGER ATTACHMENT TYPE		BRACE ATTACHMENT TYPE
		TRANS./ 10 FT	LONG./ 20 FT	ALL-DIR./ 20 FT	TRANS./LONG. BRACE LOCATION	ALL-DIR. BRACE LOCATION	
WEIGHT (LBS/FT)	10	E1.10	E1.11	E1.12	38C	38F	50B
	20	E1.10	E1.11	E1.12	38E	38J	50D
	30	E1.20	E1.21	E1.22	50G	50L	50E
	40	E1.20	E1.21	E1.22	50H	50M	50F
	45	E1.20	E1.21	E1.22	50J	50M	50G
	50	E1.30	E1.31	E1.32	63J	63N	63G

REVIEWED FOR CODE COMPLIANCE
OPM-0043
BY: William Staehlin
DATE: 01/23/2023
CALIFORNIA BUILDING CODE 2022

MASON WEST
1601 E. Miraloma Ave. Placentia, CA 92870
TEL (714) 630 - 0701, www.masonwest.com

Jiefu "Jeff" Zhang, SE
California SE No. S5270

CABLE TRAY	SEISMIC CABLE BRACING INSTALLATION REQUIREMENTS	LATERAL FORCE Fp = 0.25g (ASD) VERTICAL FORCE Fpv = 0.375g (ASD)

Fp = 0.25g Fpv = 0.375g		STANDARD CABLE BRACING FOR 458BRACE ANGLE BRACE SPACING - OPTION #1					
ELECTRICAL TRAY SUPPORT AT 10'-0" MAX.		INSTALLATION DETAILS					
		BRACE DIRECTION/SPACING			HANGER ATTACHMENT TYPE		BRACE ATTACHMENT TYPE
		TRANS./ 40 FT	LONG./ 80 FT	ALL-DIR./ 80 FT	TRANS./LONG. BRACE LOCATION	ALL-DIR. BRACE LOCATION	
WEIGHT (LBS/FT)	10	E2.10	E2.11	E2.12	38A	38A	38B
	20	E2.10	E2.11	E2.12	38C	38C	38D
	30	E2.20	E2.21	E2.22	50D	50D	50E
	40	E2.20	E2.21	E2.22	50E	50E	50F
	45	E2.20	E2.21	E2.22	50E	50E	50G
	50	E2.30	E2.31	E2.32	63E	63E	50G

Fp = 0.25g Fpv = 0.375g		STANDARD CABLE BRACING FOR 458BRACE ANGLE BRACE SPACING - OPTION #2					
ELECTRICAL TRAY SUPPORT AT 10'-0" MAX.		INSTALLATION DETAILS					
		BRACE DIRECTION/SPACING			HANGER ATTACHMENT TYPE		BRACE ATTACHMENT TYPE
		TRANS./ 30 FT	LONG./ 60 FT	ALL-DIR./ 60 FT	TRANS./LONG. BRACE LOCATION	ALL-DIR. BRACE LOCATION	
WEIGHT (LBS/FT)	10	E2.10	E2.11	E2.12	38A	38A	38B
	20	E2.10	E2.11	E2.12	38C	38C	38C
	30	E2.20	E2.21	E2.22	50D	50D	50D
	40	E2.20	E2.21	E2.22	50E	50E	50E
	45	E2.20	E2.21	E2.22	50E	50E	50E
	50	E2.30	E2.31	E2.32	63E	63E	50F
	60	E2.30	E2.31	E2.32	63F	63F	50G
	70	E2.30	E2.31	E2.32	63G	63G	50G

Fp = 0.25g Fpv = 0.375g		STANDARD CABLE BRACING FOR 458BRACE ANGLE BRACE SPACING - OPTION #3					
ELECTRICAL TRAY SUPPORT AT 10'-0" MAX.		INSTALLATION DETAILS					
		BRACE DIRECTION/SPACING			HANGER ATTACHMENT TYPE		BRACE ATTACHMENT TYPE
		TRANS./ 20 FT	LONG./ 40 FT	ALL-DIR./ 40 FT	TRANS./LONG. BRACE LOCATION	ALL-DIR. BRACE LOCATION	
WEIGHT (LBS/FT)	10	E2.10	E2.11	E2.12	38A	38A	38A
	20	E2.10	E2.11	E2.12	38C	38C	38B
	30	E2.20	E2.21	E2.22	50D	50D	50C
	40	E2.20	E2.21	E2.22	50E	50E	50D
	45	E2.20	E2.21	E2.22	50E	50E	50D
	50	E2.30	E2.31	E2.32	63E	63E	50E
	60	E2.30	E2.31	E2.32	63F	63F	50E
	70	E2.30	E2.31	E2.32	63G	63G	50F
	80	E2.30	E2.31	E2.32	63G	63G	50F
	85	E2.30	E2.31	E2.32	63H	63H	50F

REVIEWED FOR CODE COMPLIANCE
OPM-0043
By William Staehlin
DATE: 1/23/2023
CALIFORNIA BUILDING CODE 2022

MASON WEST
1601 E. Miraloma Ave. Placentia, CA 92870
TEL (714) 630 - 0701, www.masonwest.com

Jiefu "Jeff" Zhang, SE
California SE No. S5270

CABLE TRAY	SEISMIC CABLE BRACING INSTALLATION REQUIREMENTS	LATERAL FORCE Fp = 0.5g (ASD) VERTICAL FORCE Fpv = 0.375g (ASD)

Fp = 0.5g Fpv = 0.375g		STANDARD CABLE BRACING FOR 458BRACE ANGLE BRACE SPACING - OPTION #1					
ELECTRICAL TRAY SUPPORT AT 10'-0" MAX.		INSTALLATION DETAILS					
		BRACE DIRECTION/SPACING			HANGER ATTACHMENT TYPE		BRACE ATTACHMENT TYPE
		TRANS./ 30 FT	LONG./ 60 FT	ALL-DIR./ 60 FT	TRANS./LONG. BRACE LOCATION	ALL-DIR. BRACE LOCATION	
WEIGHT (LBS/FT)	10	E2.10	E2.11	E2.12	38A	38A	38C
	20	E2.20	E2.21	E2.22	50C	50C	50E
	30	E2.20	E2.21	E2.22	50D	50D	50G

Fp = 0.5g Fpv = 0.375g		STANDARD CABLE BRACING FOR 458BRACE ANGLE BRACE SPACING - OPTION #2					
ELECTRICAL TRAY SUPPORT AT 10'-0" MAX.		INSTALLATION DETAILS					
		BRACE DIRECTION/SPACING			HANGER ATTACHMENT TYPE		BRACE ATTACHMENT TYPE
		TRANS./ 20 FT	LONG./ 40 FT	ALL-DIR./ 40 FT	TRANS./LONG. BRACE LOCATION	ALL-DIR. BRACE LOCATION	
WEIGHT (LBS/FT)	10	E2.10	E2.11	E2.12	38A	38A	38B
	20	E2.10	E2.11	E2.12	38C	38C	38D
	30	E2.20	E2.21	E2.22	50D	50D	50E
	40	E2.20	E2.21	E2.22	50E	50E	50F
	45	E2.20	E2.21	E2.22	50E	50E	50G
	50	E2.30	E2.31	E2.32	63E	63E	50G

REVIEWED FOR CODE COMPLIANCE
OPM-0043
Reviewed by William Staehlin
DATE: 01/23/2023
CALIFORNIA BUILDING CODE 2022

Fp = 0.5g Fpv = 0.375g		STANDARD CABLE BRACING FOR 458BRACE ANGLE BRACE SPACING - OPTION #3					
ELECTRICAL TRAY SUPPORT AT 10'-0" MAX.		INSTALLATION DETAILS					
		BRACE DIRECTION/SPACING			HANGER ATTACHMENT TYPE		BRACE ATTACHMENT TYPE
		TRANS./ 10 FT	LONG./ 20 FT	ALL-DIR./ 20 FT	TRANS./LONG. BRACE LOCATION	ALL-DIR. BRACE LOCATION	
WEIGHT (LBS/FT)	10	E2.10	E2.11	E2.12	38A	38A	38A
	20	E2.10	E2.11	E2.12	38C	38C	38B
	30	E2.20	E2.21	E2.22	50D	50D	50C
	40	E2.20	E2.21	E2.22	50E	50E	50D
	45	E2.20	E2.21	E2.22	50E	50E	50D
	50	E2.30	E2.31	E2.32	63E	63E	50E
	60	E2.30	E2.31	E2.32	63F	63F	50E
	70	E2.30	E2.31	E2.32	63G	63G	50F
	80	E2.30	E2.31	E2.32	63G	63G	50F
	85	E2.30	E2.31	E2.32	63H	63H	50F

MASON WEST
1601 E. Miraloma Ave. Placentia, CA 92870
TEL (714) 630 - 0701, www.masonwest.com

Jiefu "Jeff" Zhang, SE
California SE No. S5270

PAGE
B5.4

CABLE TRAY	SEISMIC CABLE BRACING INSTALLATION REQUIREMENTS	LATERAL FORCE Fp = 1.0g (ASD) VERTICAL FORCE Fpv = 0.375g (ASD)

Fp = 1g Fpv = 0.375g		STANDARD CABLE BRACING FOR 458BRACE ANGLE BRACE SPACING - OPTION #1					
ELECTRICAL TRAY SUPPORT AT 10'-0" MAX.		INSTALLATION DETAILS					
		BRACE DIRECTION/SPACING			HANGER ATTACHMENT TYPE		BRACE ATTACHMENT TYPE
		TRANS./ 20 FT	LONG./ 40 FT	ALL-DIR./ 40 FT	TRANS./LONG. BRACE LOCATION	ALL-DIR. BRACE LOCATION	
WEIGHT (LBS/FT)	10	E2.10	E2.11	E2.12	38A	38A	38D
	20	E2.20	E2.21	E2.22	50C	50C	50F

Fp = 1g Fpv = 0.375g		STANDARD CABLE BRACING FOR 458BRACE ANGLE BRACE SPACING - OPTION #2					
ELECTRICAL TRAY SUPPORT AT 10'-0" MAX.		INSTALLATION DETAILS					
		BRACE DIRECTION/SPACING			HANGER ATTACHMENT TYPE		BRACE ATTACHMENT TYPE
		TRANS./ 15 FT	LONG./ 30 FT	ALL-DIR./ 30 FT	TRANS./LONG. BRACE LOCATION	ALL-DIR. BRACE LOCATION	
WEIGHT (LBS/FT)	10	E2.10	E2.11	E2.12	38A	38A	38C
	20	E2.20	E2.21	E2.22	50C	50C	50E
	30	E2.20	E2.21	E2.22	50D	50D	50G

Fp = 1g Fpv = 0.375g		STANDARD CABLE BRACING FOR 458BRACE ANGLE BRACE SPACING - OPTION #3					
ELECTRICAL TRAY SUPPORT AT 10'-0" MAX.		INSTALLATION DETAILS					
		BRACE DIRECTION/SPACING			HANGER ATTACHMENT TYPE		BRACE ATTACHMENT TYPE
		TRANS./ 10 FT	LONG./ 20 FT	ALL-DIR./ 20 FT	TRANS./LONG. BRACE LOCATION	ALL-DIR. BRACE LOCATION	
WEIGHT (LBS/FT)	10	E2.10	E2.11	E2.12	38A	38A	38B
	20	E2.10	E2.11	E2.12	38C	38C	38D
	30	E2.20	E2.21	E2.22	50D	50D	50E
	40	E2.20	E2.21	E2.22	50E	50E	50F
	45	E2.20	E2.21	E2.22	50E	50E	50G
	50	E2.30	E2.31	E2.32	63E	63E	50G

REVIEWED FOR CODE COMPLIANCE
OPM-0043
BY: William Staehlin
DATE: 01/23/2023
CALIFORNIA BUILDING CODE, 2022

MASON WEST
1601 E. Miraloma Ave. Placentia, CA 92870
TEL (714) 630 - 0701, www.masonwest.com

Jiefu "Jeff" Zhang, SE
California SE No. S5270

CABLE TRAY

SEISMIC CABLE X-PATTERN BRACING INSTALLATION REQUIREMENTS

LATERAL FORCE
Fp = 0.25g (ASD)
VERTICAL FORCE
Fpv = 0.375g (ASD)

Fp = 0.25g Fpv = 0.375g		X-PATTERN CABLE BRACING FOR 458BRACE ANGLE BRACE SPACING - OPTION #1		
ELECTRICAL TRAY SUPPORT AT 10'-0" MAX.		INSTALLATION DETAILS		
		BRACE SPACING 40 FT	HANGER ATTACHMENT TYPE	BRACE ATTACHMENT TYPE
WEIGHT (LBS/FT)	10	E3.10	38A	38B
	20	E3.10	38C	38D
	30	E3.11	50D	50E
	40	E3.11	50E	50F
	45	E3.11	50E	50G
	50	E3.12	63E	50G

Fp = 0.25g Fpv = 0.375g		X-PATTERN CABLE BRACING FOR 458BRACE ANGLE BRACE SPACING - OPTION #2		
ELECTRICAL TRAY SUPPORT AT 10'-0" MAX.		INSTALLATION DETAILS		
		BRACE SPACING 30 FT	HANGER ATTACHMENT TYPE	BRACE ATTACHMENT TYPE
WEIGHT (LBS/FT)	10	E3.10	38A	38B
	20	E3.10	38C	38C
	30	E3.11	50D	50D
	40	E3.11	50E	50E
	45	E3.11	50E	50E
	50	E3.12	63E	50F
	60	E3.12	63F	50G
	70	E3.12	63G	50G

REVIEWED FOR CODE COMPLIANCE
CALIFORNIA BUILDING CODE 2019
HCAI
OPM-0043
BY: William Staehlin
DATE: 01/23/2023

Fp = 0.25g Fpv = 0.375g		X-PATTERN CABLE BRACING FOR 458BRACE ANGLE BRACE SPACING - OPTION #3		
ELECTRICAL TRAY SUPPORT AT 10'-0" MAX.		INSTALLATION DETAILS		
		BRACE SPACING 20 FT	HANGER ATTACHMENT TYPE	BRACE ATTACHMENT TYPE
WEIGHT (LBS/FT)	10	E3.10	38A	38A
	20	E3.10	38C	38B
	30	E3.11	50D	50C
	40	E3.11	50E	50D
	45	E3.11	50E	50D
	50	E3.12	63E	50E
	60	E3.12	63F	50E
	70	E3.12	63G	50F
	80	E3.12	63G	50F
	85	E3.12	63H	50F

MASON WEST
1601 E. Miraloma Ave. Placentia, CA 92870
TEL (714) 630 - 0701, www.masonwest.com

Jiefu "Jeff" Zhang, SE
California SE No. S5270

PAGE
B5.6

CABLE TRAY

SEISMIC CABLE X-PATTERN BRACING INSTALLATION REQUIREMENTS

LATERAL FORCE
Fp = 0.5g (ASD)
VERTICAL FORCE
Fpv = 0.375g (ASD)

Fp = 0.5g Fpv = 0.375g		X-PATTERN CABLE BRACING FOR 458BRACE ANGLE BRACE SPACING - OPTION #1		
ELECTRICAL TRAY SUPPORT AT 10'-0" MAX.		INSTALLATION DETAILS		
		BRACE SPACING 30 FT	HANGER ATTACHMENT TYPE	BRACE ATTACHMENT TYPE
WEIGHT (LBS/FT)	10	E3.10	38A	38C
	20	E3.11	50C	50E
	30	E3.11	50D	50G

Fp = 0.5g Fpv = 0.375g		X-PATTERN CABLE BRACING FOR 458BRACE ANGLE BRACE SPACING - OPTION #2		
ELECTRICAL TRAY SUPPORT AT 10'-0" MAX.		INSTALLATION DETAILS		
		BRACE SPACING 20 FT	HANGER ATTACHMENT TYPE	BRACE ATTACHMENT TYPE
WEIGHT (LBS/FT)	10	E3.10	38A	38B
	20	E3.10	38C	38D
	30	E3.11	50D	50E
	40	E3.11	50E	50F
	45	E3.11	50E	50G
	50	E3.12	63E	50G

Fp = 0.5g Fpv = 0.375g		X-PATTERN CABLE BRACING FOR 458BRACE ANGLE BRACE SPACING - OPTION #3		
ELECTRICAL TRAY SUPPORT AT 10'-0" MAX.		INSTALLATION DETAILS		
		BRACE SPACING 10 FT	HANGER ATTACHMENT TYPE	BRACE ATTACHMENT TYPE
WEIGHT (LBS/FT)	10	E3.10	38A	38A
	20	E3.10	38C	38B
	30	E3.11	50D	50C
	40	E3.11	50E	50D
	45	E3.11	50E	50D
	50	E3.12	63E	50E
	60	E3.12	63F	50E
	70	E3.12	63G	50F
	80	E3.12	63G	50F
	85	E3.12	63H	50F

REVIEWED FOR CODE COMPLIANCE
HCAI
OPM-0043
BY: William Staehlin
DATE: 01/23/2023
CALIFORNIA BUILDING CODE 2022

MASON WEST
1601 E. Miraloma Ave. Placentia, CA 92870
TEL (714) 630 - 0701, www.masonwest.com

Jiefu "Jeff" Zhang, SE
California SE No. S5270

CABLE TRAY

SEISMIC CABLE X-PATTERN BRACING INSTALLATION REQUIREMENTS

LATERAL FORCE
Fp = 1.0g (ASD)
VERTICAL FORCE
Fpv = 0.375g (ASD)

Fp = 1g Fpv = 0.375g		X-PATTERN CABLE BRACING FOR 458BRACE ANGLE BRACE SPACING - OPTION #1		
ELECTRICAL TRAY SUPPORT AT 10'-0" MAX.		INSTALLATION DETAILS		
		BRACE SPACING 20 FT	HANGER ATTACHMENT TYPE	BRACE ATTACHMENT TYPE
WEIGHT (LBS/FT)	10	E3.10	38A	38D
	20	E3.11	50C	50F

Fp = 1g Fpv = 0.375g		X-PATTERN CABLE BRACING FOR 458BRACE ANGLE BRACE SPACING - OPTION #2		
ELECTRICAL TRAY SUPPORT AT 10'-0" MAX.		INSTALLATION DETAILS		
		BRACE SPACING 15 FT	HANGER ATTACHMENT TYPE	BRACE ATTACHMENT TYPE
WEIGHT (LBS/FT)	10	E3.10	38A	38C
	20	E3.11	50C	50E
	30	E3.11	50D	50G

HCAI
OPM-0043
BY: William Staehlin
DATE: 01/23/2023
REVIEWED FOR CODE COMPLIANCE
CALIFORNIA BUILDING CODE 2022

Fp = 1g Fpv = 0.375g		X-PATTERN CABLE BRACING FOR 458BRACE ANGLE BRACE SPACING - OPTION #3		
ELECTRICAL TRAY SUPPORT AT 10'-0" MAX.		INSTALLATION DETAILS		
		BRACE SPACING 10 FT	HANGER ATTACHMENT TYPE	BRACE ATTACHMENT TYPE
WEIGHT (LBS/FT)	10	E3.10	38A	38B
	20	E3.10	38C	38D
	30	E3.11	50D	50E
	40	E3.11	50E	50F
	45	E3.11	50E	50G
	50	E3.12	63E	50G

MASON WEST
1601 E. Miraloma Ave. Placentia, CA 92870
TEL (714) 630 - 0701, www.masonwest.com

Jiefu "Jeff" Zhang, SE
California SE No. S5270

PAGE
B5.8

HANGER ROD DIAMETER = ⅜"

PIPING/CONDUIT TRANSVERSE SEISMIC SOLID BRACING SYSTEM 2"Ø PIPE/CONDUIT MAX

KIT OPTIONS
S12T
S1220T
SH312T
SH320T

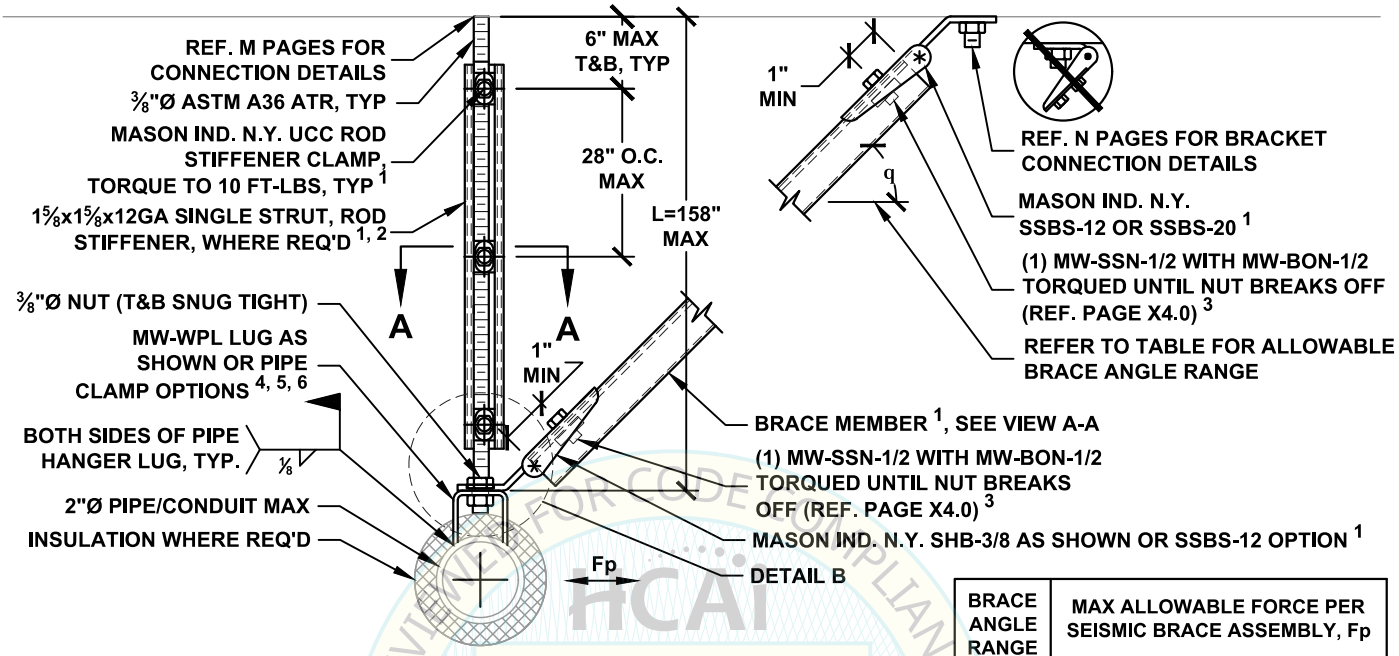

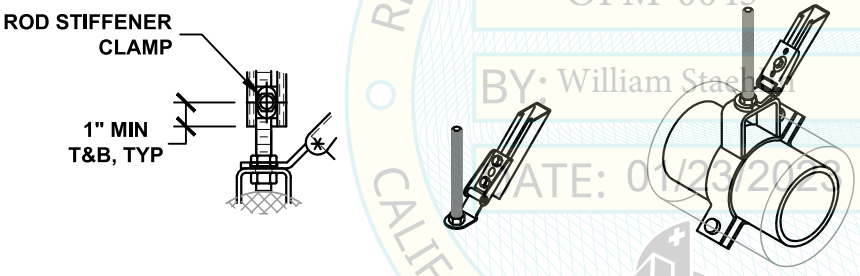

BRACE ANGLE RANGE q	MAX ALLOWABLE FORCE PER SEISMIC BRACE ASSEMBLY, Fp		
	WPL	SPC (STL*)	SPC (CI**)
30° - 45°	170 LBS	320 LBS	60 LBS
46° - 60°	170 LBS	220 LBS	60 LBS

* STL = STEEL PIPING
** CI = CAST IRON PIPING

DETAIL B **SSBS OPTION** **SPC OPTION**

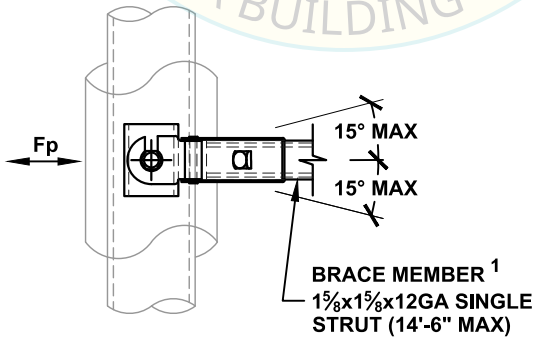

VIEW A-A

NOTES:

1. REF. SECTION A10 OR A20 FOR GENERAL NOTES.
2. PROVIDE ROD STIFFENING ONLY WHERE SEISMIC BRACKETS ARE ATTACHED TO THE ROD AND ROD LENGTH (L) EXCEEDS 18". REF. APPROPRIATE M10 PAGES FOR DETAIL.
3. PROVIDE (1) 1/2" DIA. CONNECTION IN CENTER HOLE WHEN STRUT BRACE IS INSTALLED INSIDE THE BRACKET AND (2) 1/2" DIA. CONNECTIONS IN (2) OUTER HOLES WHEN THE BRACE IS INSTALLED OUTSIDE OF THE BRACKET. REF. X2.3 FOR CONNECTION DETAILS.
4. FOR PIPE/CONDUIT SIZES UP TO 2"Ø MAX, USE RESPECTIVE MW-SPC SIZE (REF. X8.3-X8.3.1) OR USE MW-WPL-38 (REF. X8.4).
5. REF. SECTION A15 OR A25 FOR ALTERNATIVE ARRANGEMENT OF SEISMIC BRACES.
6. REF. PAGE A19.0 OR A28.0 FOR PIPE/CONDUIT CLAMP OPTION.

HCAI
OPM-0043
BY: William Staehlin
DATE: 01/23/2023
REVIEWED FOR CODE COMPLIANCE
CALIFORNIA BUILDING CODE

MASON WEST
1601 E. Miraloma Ave. Placentia, CA 92870
TEL (714) 630 - 0701, www.masonwest.com

Jiefu "Jeff" Zhang, SE
California SE No. S5270

PAGE
C1.10

HANGER ROD DIAMETER = 3/8"	PIPING/CONDUIT LONGITUDINAL SEISMIC SOLID BRACING SYSTEM 2"Ø PIPE/CONDUIT MAX	KIT OPTIONS S12L S1220L SH312L SH320L

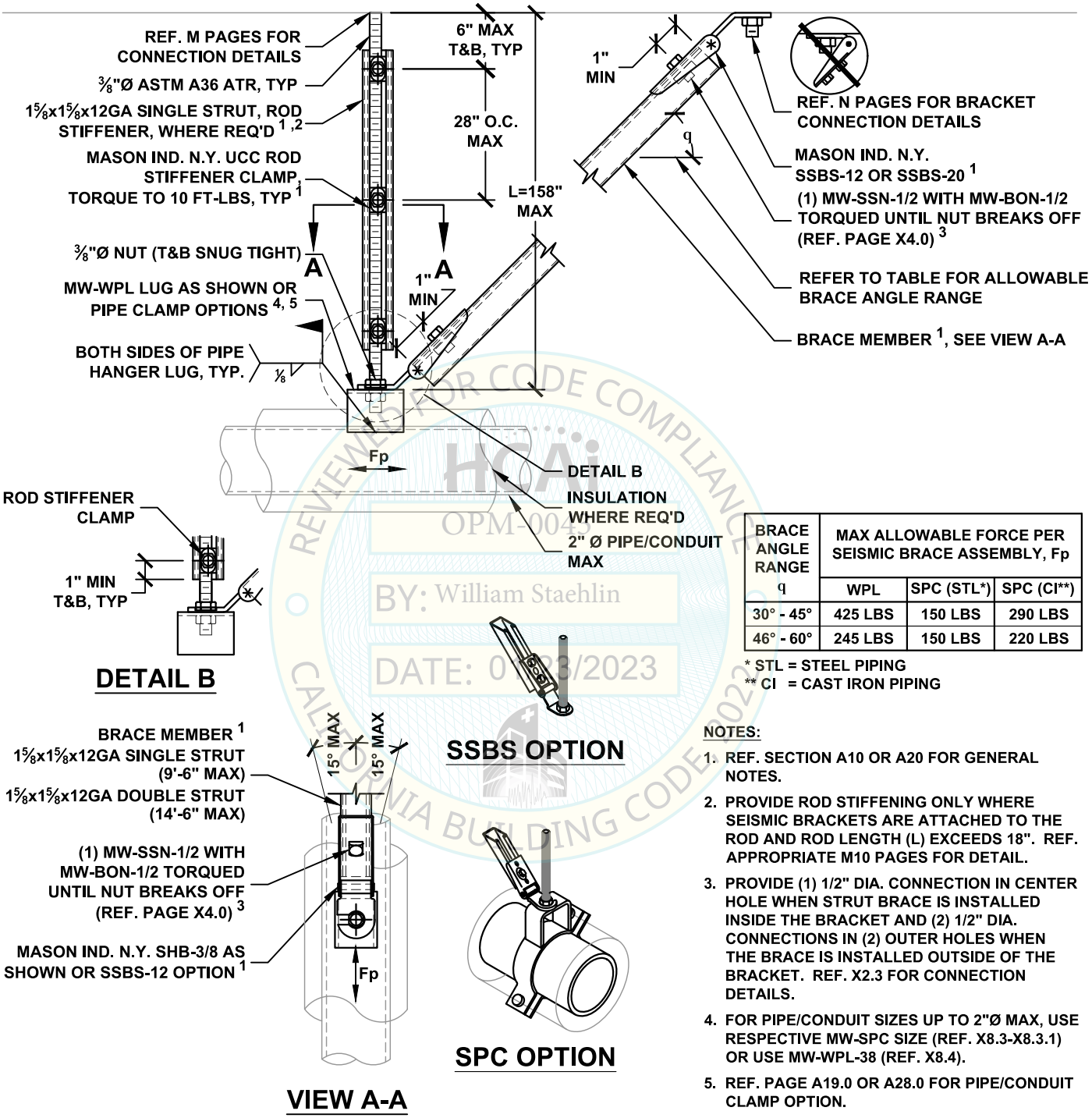

DETAIL B

SSBS OPTION

VIEW A-A

SPC OPTION

BRACE ANGLE RANGE q	MAX ALLOWABLE FORCE PER SEISMIC BRACE ASSEMBLY, Fp		
	WPL	SPC (STL*)	SPC (CI**)
30° - 45°	425 LBS	150 LBS	290 LBS
46° - 60°	245 LBS	150 LBS	220 LBS

* STL = STEEL PIPING
** CI = CAST IRON PIPING

NOTES:

1. REF. SECTION A10 OR A20 FOR GENERAL NOTES.
2. PROVIDE ROD STIFFENING ONLY WHERE SEISMIC BRACKETS ARE ATTACHED TO THE ROD AND ROD LENGTH (L) EXCEEDS 18". REF. APPROPRIATE M10 PAGES FOR DETAIL.
3. PROVIDE (1) 1/2" DIA. CONNECTION IN CENTER HOLE WHEN STRUT BRACE IS INSTALLED INSIDE THE BRACKET AND (2) 1/2" DIA. CONNECTIONS IN (2) OUTER HOLES WHEN THE BRACE IS INSTALLED OUTSIDE OF THE BRACKET. REF. X2.3 FOR CONNECTION DETAILS.
4. FOR PIPE/CONDUIT SIZES UP TO 2"Ø MAX, USE RESPECTIVE MW-SPC SIZE (REF. X8.3-X8.3.1) OR USE MW-WPL-38 (REF. X8.4).
5. REF. PAGE A19.0 OR A28.0 FOR PIPE/CONDUIT CLAMP OPTION.

REVIEWED FOR CODE COMPLIANCE
HCAi
OPM-0043
BY: William Staehlin
DATE: 01/23/2023
CALIFORNIA BUILDING CODE 2022

MASON WEST
1601 E. Miraloma Ave. Placentia, CA 92870
TEL (714) 630 - 0701, www.masonwest.com

Jiefu "Jeff" Zhang, SE
California SE No. S5270

PAGE
C1.11

HANGER ROD DIAMETER = ⅜"

PIPING/CONDUIT ALL-DIRECTIONAL SEISMIC SOLID BRACING SYSTEM 2"Ø PIPE/CONDUIT MAX

KIT OPTIONS
S12A
S1220A
SH312A
SH320A

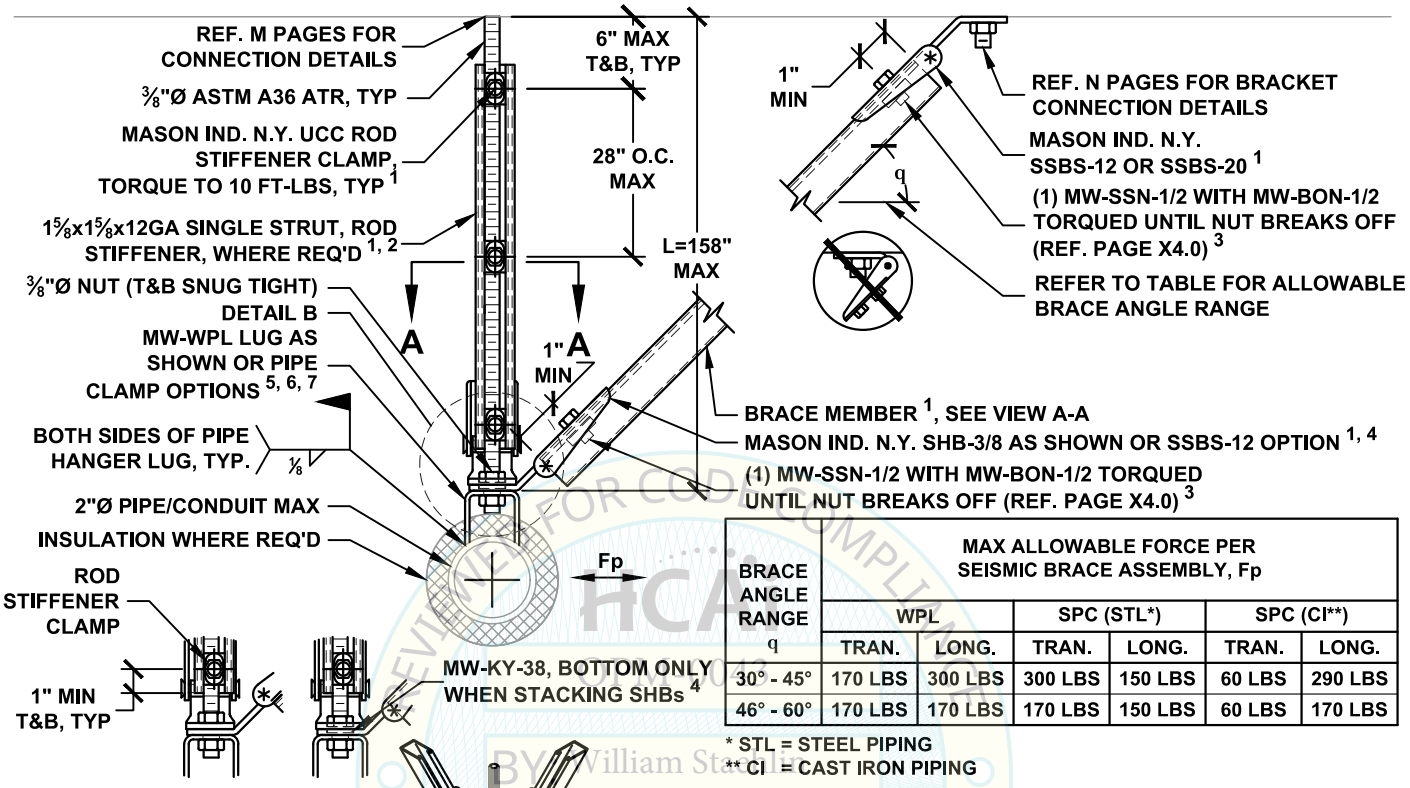

DETAIL B

BRACE ANGLE RANGE q	MAX ALLOWABLE FORCE PER SEISMIC BRACE ASSEMBLY, Fp					
	WPL		SPC (STL*)		SPC (CI**)	
	TRAN.	LONG.	TRAN.	LONG.	TRAN.	LONG.
30° - 45°	170 LBS	300 LBS	300 LBS	150 LBS	60 LBS	290 LBS
46° - 60°	170 LBS	170 LBS	170 LBS	150 LBS	60 LBS	170 LBS

* STL = STEEL PIPING
** CI = CAST IRON PIPING

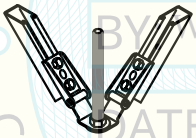

SSBS OPTION

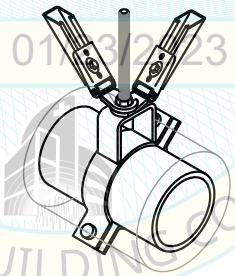

SPC OPTION

VIEW A-A

NOTES:

1. REF. SECTION A10 OR A20 FOR GENERAL NOTES.
2. PROVIDE ROD STIFFENING ONLY WHERE SEISMIC BRACKETS ARE ATTACHED TO THE ROD AND ROD LENGTH (L) EXCEEDS 18". REF. APPROPRIATE M10 PAGES FOR DETAIL.
3. PROVIDE (1) 1/2" DIA. CONNECTION IN CENTER HOLE WHEN STRUT BRACE IS INSTALLED INSIDE THE BRACKET AND (2) 1/2" DIA. CONNECTIONS IN (2) OUTER HOLES WHEN THE BRACE IS INSTALLED OUTSIDE OF THE BRACKET. REF. X2.3 FOR CONNECTION DETAILS.
4. MW-KY-38 MUST BE USED ON TOP OF BOTTOM SHB WHEN STACKING (2) SHB ON THE SAME ROD, REF X2.4.
5. FOR PIPE/CONDUIT SIZES UP TO 2"Ø MAX, USE RESPECTIVE MW-SPC SIZE (REF. X8.3-X8.3.1) OR USE MW-WPL-38 (REF. X8.4).
6. REF. SECTION A15 OR A25 FOR ALTERNATE ARRANGEMENTS OF SEISMIC BRACES.
7. REF. PAGE A19.0 OR A28.0 FOR PIPE/CONDUIT CLAMP OPTION.

EVIDENCE FOR CODE COMPLIANCE
HCAI
OPM-0043
Reviewed By: William Staehlin
DATE: 01/23/2023
CALIFORNIA BUILDING CODE, 2022

MASON WEST
1601 E. Miraloma Ave. Placentia, CA 92870
TEL (714) 630 - 0701, www.masonwest.com

Jiefu "Jeff" Zhang, SE
California SE No. S5270

PAGE
C1.12

HANGER ROD DIAMETER = ½"	PIPING/CONDUIT TRANSVERSE SEISMIC SOLID BRACING SYSTEM 3"Ø PIPE/CONDUIT MAX	KIT OPTIONS S12T S1220T SH412T SH420T

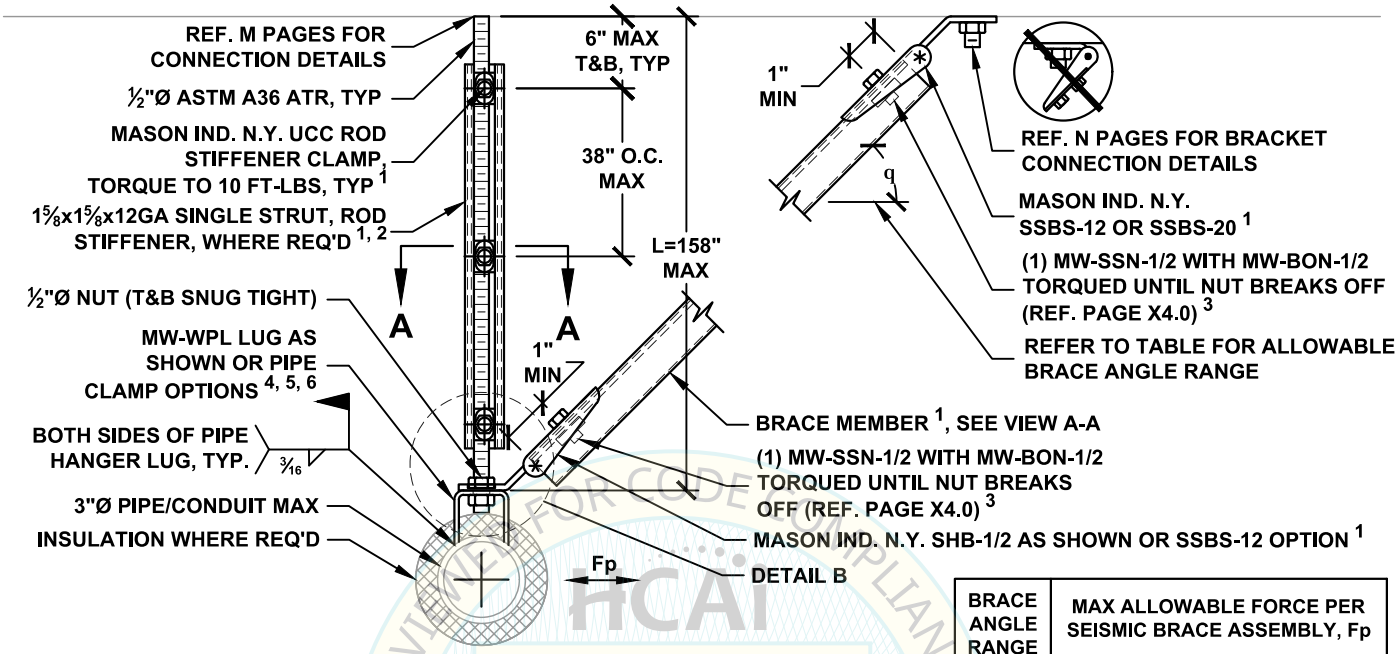

BRACE ANGLE RANGE q	MAX ALLOWABLE FORCE PER SEISMIC BRACE ASSEMBLY, Fp		
	WPL	SPC (STL*)	SPC (CI**)
30° - 45°	350 LBS	460 LBS	220 LBS
46° - 60°	350 LBS	410 LBS	220 LBS

* STL = STEEL PIPING
** CI = CAST IRON PIPING

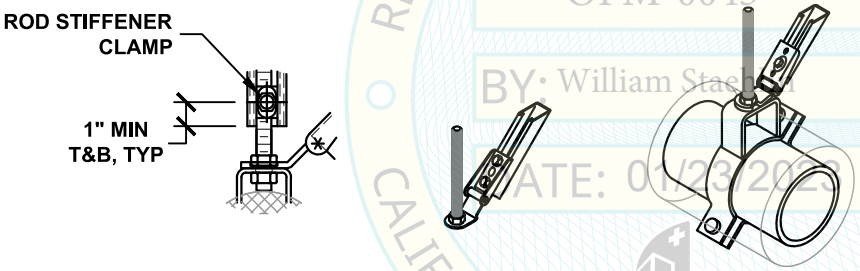

DETAIL B **SSBS OPTION** **SPC OPTION**

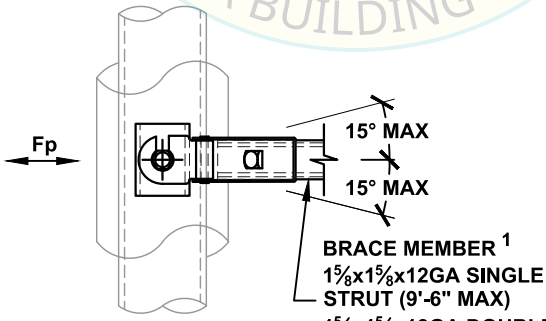

VIEW A-A

NOTES:

1. REF. SECTION A10 OR A20 FOR GENERAL NOTES.
2. PROVIDE ROD STIFFENING ONLY WHERE SEISMIC BRACKETS ARE ATTACHED TO THE ROD AND ROD LENGTH (L) EXCEEDS 25". REF. APPROPRIATE M10 PAGES FOR DETAIL.
3. PROVIDE (1) 1/2" DIA. CONNECTION IN CENTER HOLE WHEN STRUT BRACE IS INSTALLED INSIDE THE BRACKET AND (2) 1/2" DIA. CONNECTIONS IN (2) OUTER HOLES WHEN THE BRACE IS INSTALLED OUTSIDE OF THE BRACKET. REF. X2.3 FOR CONNECTION DETAILS.
4. FOR PIPE/CONDUIT SIZES UP TO 3"Ø MAX, USE RESPECTIVE MW-SPC SIZE (REF. X8.3-X8.3.1) OR USE MW-WPL-50 (REF. X8.4).
5. REF. SECTION A15 OR A25 FOR ALTERNATIVE ARRANGEMENT OF SEISMIC BRACES.
6. REF. PAGE A19.0 OR A28.0 FOR PIPE/CONDUIT CLAMP OPTION.

HCAI
OPM-0043
BY: William Staehlin
DATE: 01/23/2023
REVIEWED FOR CODE COMPLIANCE
CALIFORNIA BUILDING CODE 2022

MASON WEST
1601 E. Miraloma Ave. Placentia, CA 92870
TEL (714) 630 - 0701, www.masonwest.com

Jiefu "Jeff" Zhang, SE
California SE No. S5270

PAGE
C1.20

HANGER ROD DIAMETER = ½"	PIPING/CONDUIT LONGITUDINAL SEISMIC SOLID BRACING SYSTEM 3"Ø PIPE/CONDUIT MAX	KIT OPTIONS S12L S1220L SH412L SH420L

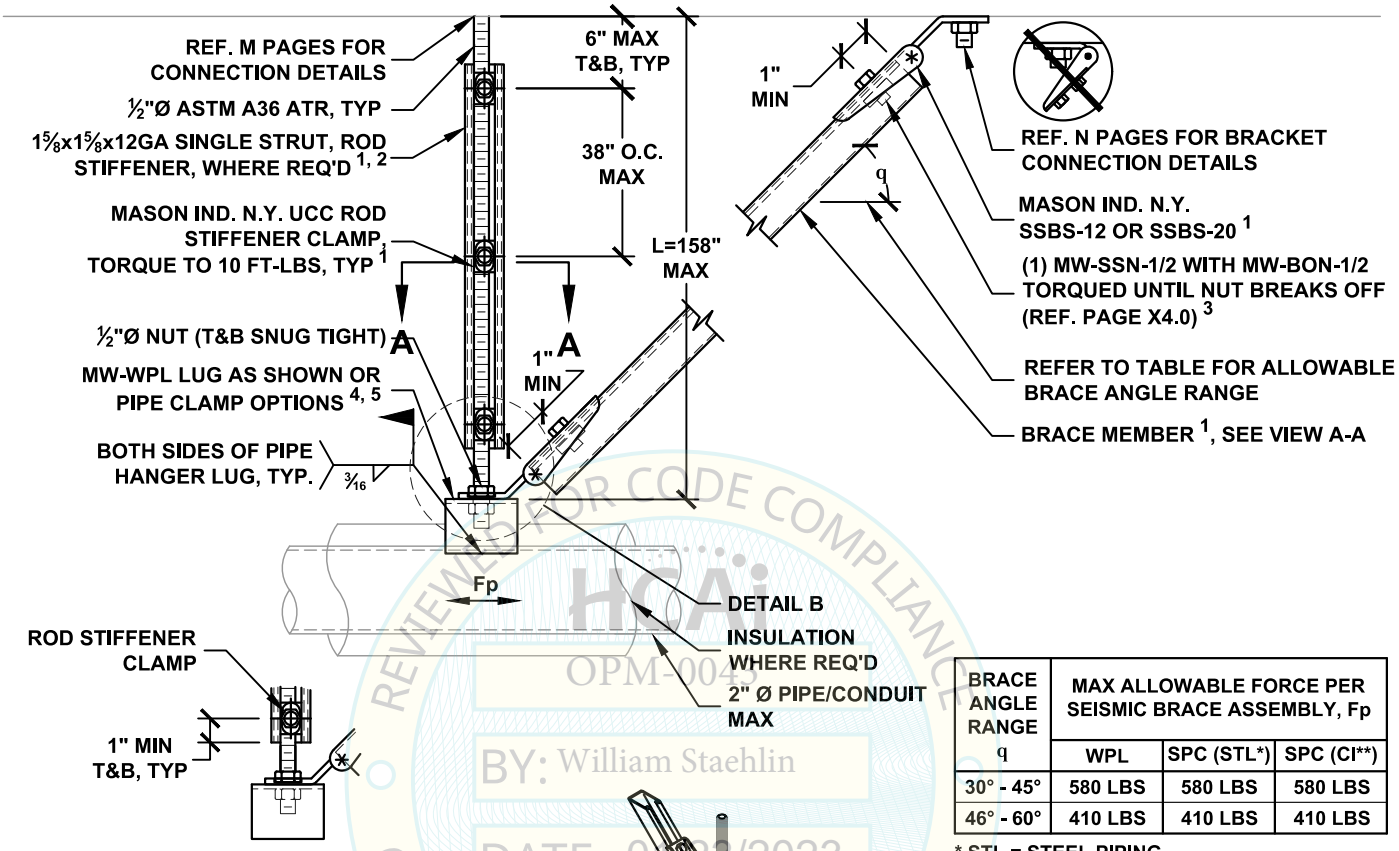

DETAIL B

BRACE ANGLE RANGE q	MAX ALLOWABLE FORCE PER SEISMIC BRACE ASSEMBLY, Fp		
	WPL	SPC (STL*)	SPC (CI**)
30° - 45°	580 LBS	580 LBS	580 LBS
46° - 60°	410 LBS	410 LBS	410 LBS

* STL = STEEL PIPING
** CI = CAST IRON PIPING

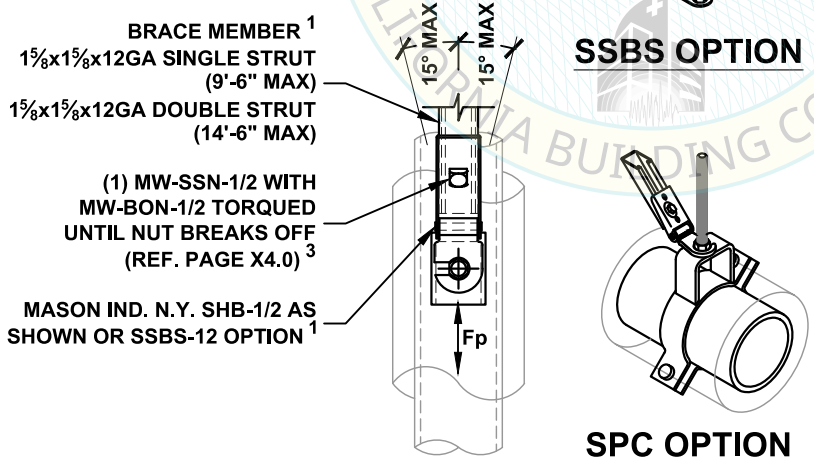

VIEW A-A

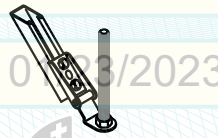

SSBS OPTION

SPC OPTION

NOTES:

1. REF. SECTION A10 OR A20 FOR GENERAL NOTES.
2. PROVIDE ROD STIFFENING ONLY WHERE SEISMIC BRACKETS ARE ATTACHED TO THE ROD AND ROD LENGTH (L) EXCEEDS 25". REF. APPROPRIATE M10 PAGES FOR DETAIL.
3. PROVIDE (1) 1/2" DIA. CONNECTION IN CENTER HOLE WHEN STRUT BRACE IS INSTALLED INSIDE THE BRACKET AND (2) 1/2" DIA. CONNECTIONS IN (2) OUTER HOLES WHEN THE BRACE IS INSTALLED OUTSIDE OF THE BRACKET. REF. X2.3 FOR CONNECTION DETAILS.
4. FOR PIPE/CONDUIT SIZES UP TO 3"Ø MAX, USE RESPECTIVE MW-SPC SIZE (REF. X8.3-X8.3.1) OR USE MW-WPL-50 (REF. X8.4).
5. REF. PAGE A19.0 OR A28.0 FOR PIPE/CONDUIT CLAMP OPTION.

REVIEWED FOR CODE COMPLIANCE
HCAi
OPM-0043
BY: William Staehlin
DATE: 01/23/2023
CALIFORNIA BUILDING CODE 2022

MASON WEST
1601 E. Miraloma Ave. Placentia, CA 92870
TEL (714) 630 - 0701, www.masonwest.com

Jiefu "Jeff" Zhang, SE
California SE No. S5270

PAGE
C1.21

HANGER ROD DIAMETER = ½"

PIPING/CONDUIT ALL-DIRECTIONAL SEISMIC SOLID BRACING SYSTEM 3"Ø PIPE/CONDUIT MAX

KIT OPTIONS
S12A
S1220A
SH412A
SH420A

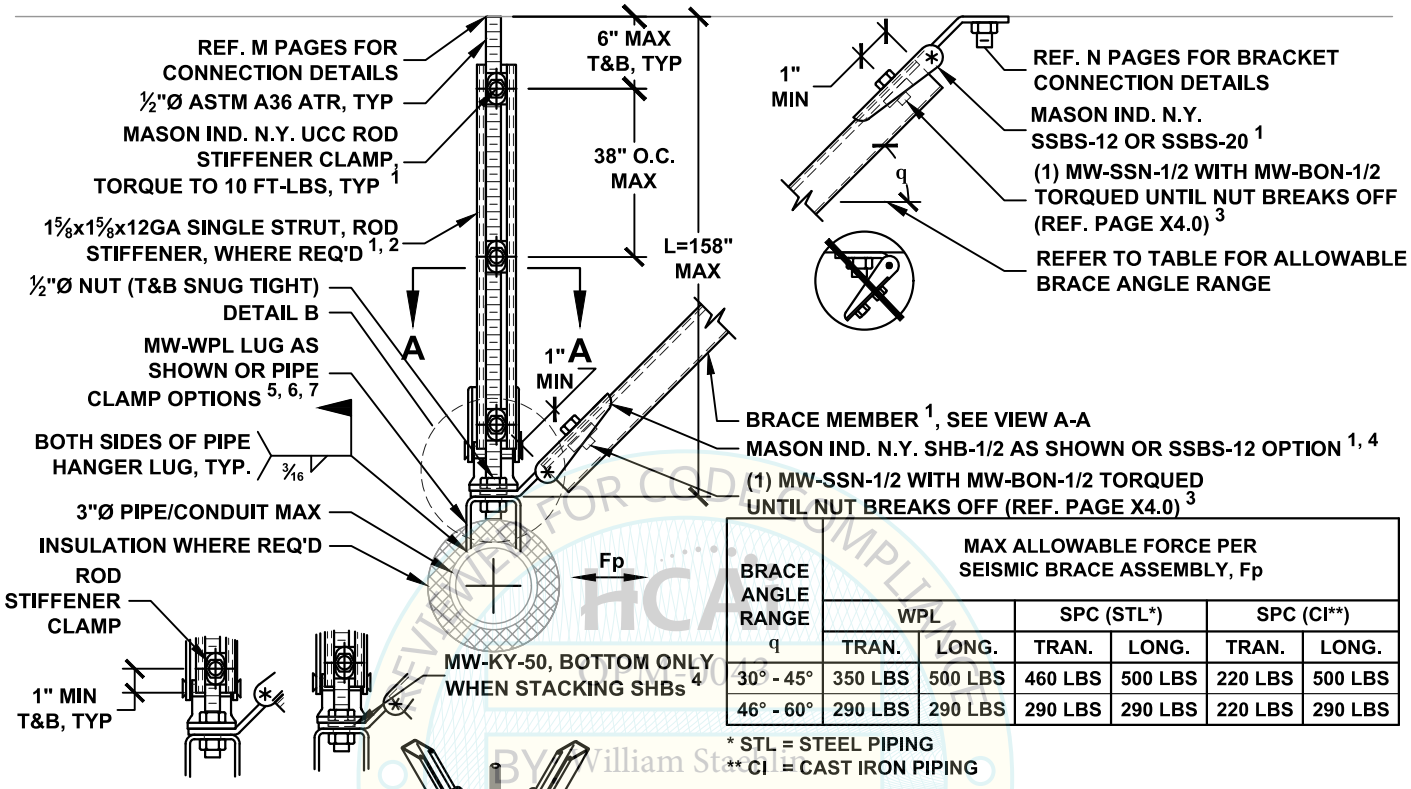

BRACE ANGLE RANGE q	MAX ALLOWABLE FORCE PER SEISMIC BRACE ASSEMBLY, Fp					
	WPL		SPC (STL*)		SPC (CI**)	
	TRAN.	LONG.	TRAN.	LONG.	TRAN.	LONG.
30° - 45°	350 LBS	500 LBS	460 LBS	500 LBS	220 LBS	500 LBS
46° - 60°	290 LBS	290 LBS	290 LBS	290 LBS	220 LBS	500 LBS

* STL = STEEL PIPING
** CI = CAST IRON PIPING

DETAIL B

SSBS OPTION

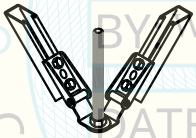

SPC OPTION

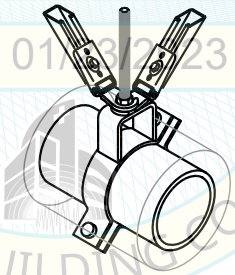

VIEW A-A

NOTES:

1. REF. SECTION A10 OR A20 FOR GENERAL NOTES.
2. PROVIDE ROD STIFFENING ONLY WHERE SEISMIC BRACKETS ARE ATTACHED TO THE ROD AND ROD LENGTH (L) EXCEEDS 25". REF. APPROPRIATE M10 PAGES FOR DETAIL.
3. PROVIDE (1) 1/2" DIA. CONNECTION IN CENTER HOLE WHEN STRUT BRACE IS INSTALLED INSIDE THE BRACKET AND (2) 1/2" DIA. CONNECTIONS IN (2) OUTER HOLES WHEN THE BRACE IS INSTALLED OUTSIDE OF THE BRACKET. REF. X2.3 FOR CONNECTION DETAILS.
4. MW-KY-50 MUST BE USED ON TOP OF BOTTOM SHB WHEN STACKING (2) SHB ON THE SAME ROD, REF X2.4.
5. FOR PIPE/CONDUIT SIZES UP TO 3"Ø MAX, USE RESPECTIVE MW-SPC SIZE (REF. X8.3-X8.3.1) OR USE MW-WPL-50 (REF. X8.4).
6. REF. SECTION A15 OR A25 FOR ALTERNATE ARRANGEMENTS OF SEISMIC BRACES.
7. REF. PAGE A19.0 OR A28.0 FOR PIPE/CONDUIT CLAMP OPTION.

REVIEWED FOR CODE COMPLIANCE BY William Staehlin DATE: 01/23/2023 OPM-0043 CALIFORNIA BUILDING CODE, 2019

MASON WEST
1601 E. Miraloma Ave. Placentia, CA 92870
TEL (714) 630 - 0701, www.masonwest.com

Jiefu "Jeff" Zhang, SE
California SE No. S5270

PAGE
C1.22

HANGER ROD DIAMETER = 5/8"	PIPING/CONDUIT TRANSVERSE SEISMIC SOLID BRACING SYSTEM 5"Ø PIPE/CONDUIT MAX	KIT OPTIONS S20T S2012T SH512T SH520T

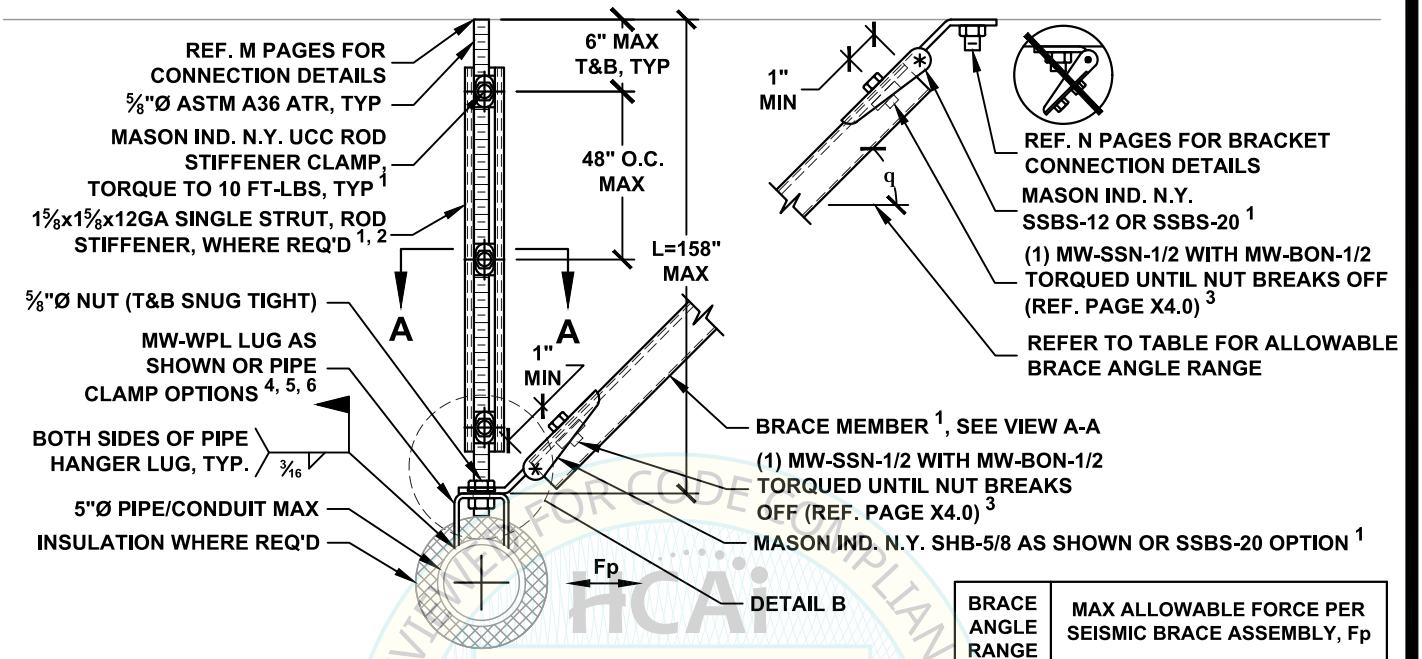

BRACE ANGLE RANGE q	MAX ALLOWABLE FORCE PER SEISMIC BRACE ASSEMBLY, Fp		
	WPL	SPC (STL*)	SPC (CI**)
30° - 45°	580 LBS	300 LBS	270 LBS
46° - 60°	410 LBS	300 LBS	270 LBS

* STL = STEEL PIPING
** CI = CAST IRON PIPING

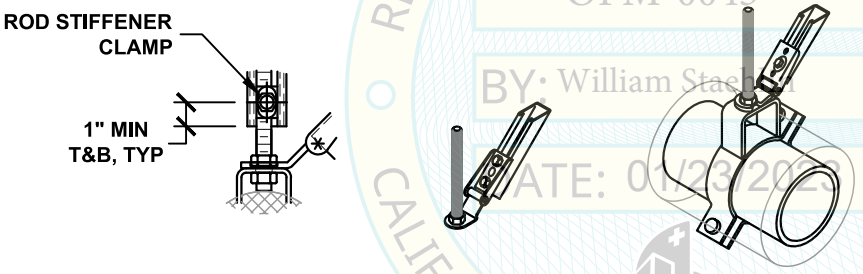

DETAIL B **SSBS OPTION** **SPC OPTION**

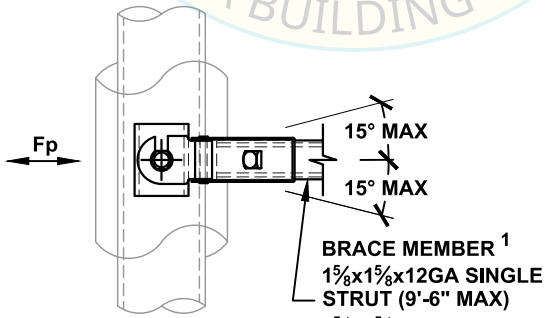

VIEW A-A

NOTES:

1. REF. SECTION A10 OR A20 FOR GENERAL NOTES.
2. PROVIDE ROD STIFFENING ONLY WHERE SEISMIC BRACKETS ARE ATTACHED TO THE ROD AND ROD LENGTH (L) EXCEEDS 31". REF. APPROPRIATE M10 PAGES FOR DETAIL.
3. PROVIDE (1) 1/2" DIA. CONNECTION IN CENTER HOLE WHEN STRUT BRACE IS INSTALLED INSIDE THE BRACKET AND (2) 1/2" DIA. CONNECTIONS IN (2) OUTER HOLES WHEN THE BRACE IS INSTALLED OUTSIDE OF THE BRACKET. REF. X2.3 FOR CONNECTION DETAILS.
4. FOR PIPE/CONDUIT SIZES UP TO 5"Ø MAX, USE RESPECTIVE MW-SPC SIZE (REF. X8.3-X8.3.1) OR USE MW-WPL-63 (REF. X8.4).
5. REF. SECTION A15 OR A25 FOR ALTERNATIVE ARRANGEMENT OF SEISMIC BRACES.
6. REF. PAGE A19.0 OR A28.0 FOR PIPE/CONDUIT CLAMP OPTION.

HCAI REVIEWED FOR CODE COMPLIANCE CALIFORNIA BUILDING CODE 2022
OPM-0043
BY: William Staehlin
DATE: 01/23/2023

MASON WEST
1601 E. Miraloma Ave. Placentia, CA 92870
TEL (714) 630 - 0701, www.masonwest.com

Jiefu "Jeff" Zhang, SE
California SE No. S5270

PAGE
C1.30

HANGER ROD DIAMETER = 5/8"	PIPING/CONDUIT TRANSVERSE SEISMIC SOLID BRACING SYSTEM 5"Ø PIPE/CONDUIT MAX	KIT OPTIONS SH54T SH5T

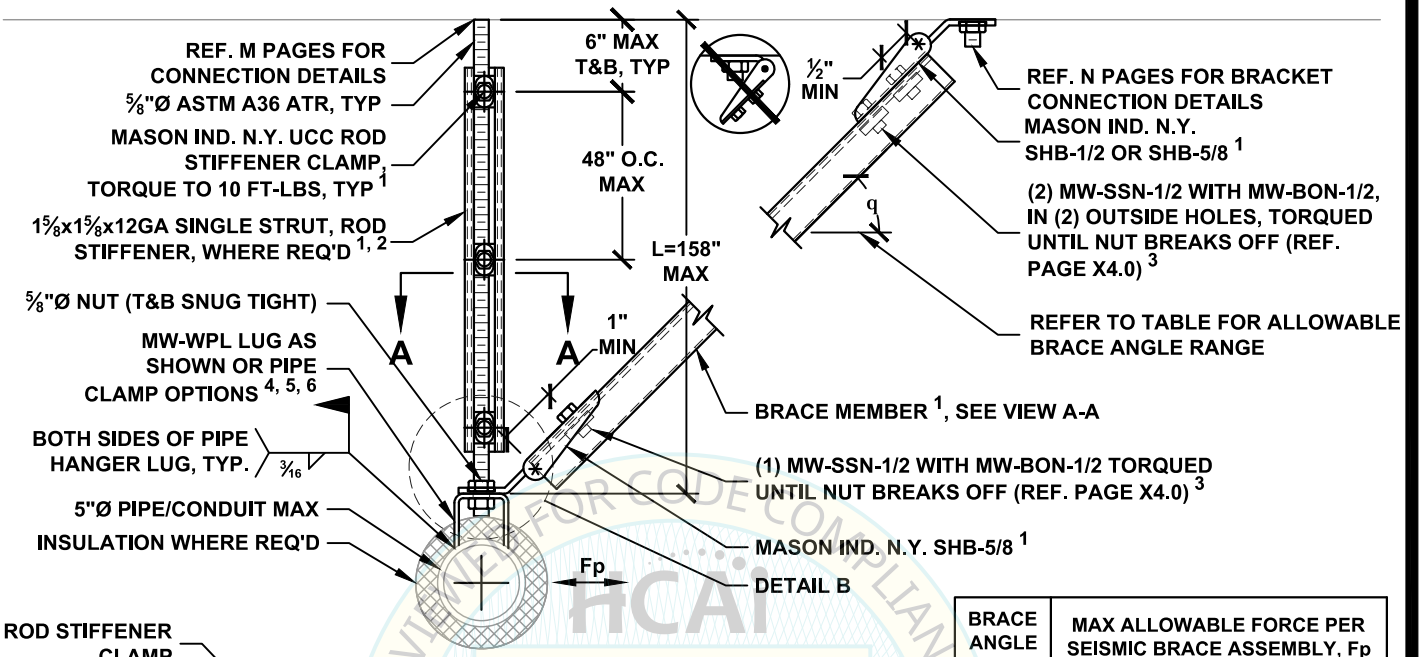

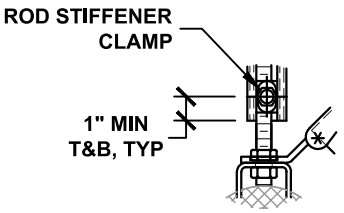

DETAIL B

BRACE ANGLE RANGE q	MAX ALLOWABLE FORCE PER SEISMIC BRACE ASSEMBLY, Fp		
	WPL	SPC (STL*)	SPC (CI**)
30° - 45°	750 LBS	300 LBS	270 LBS
46° - 60°	575 LBS	300 LBS	270 LBS

* STL = STEEL PIPING
** CI = CAST IRON PIPING

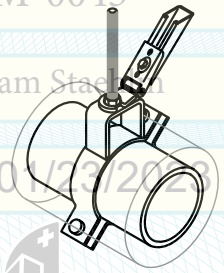

SPC OPTION

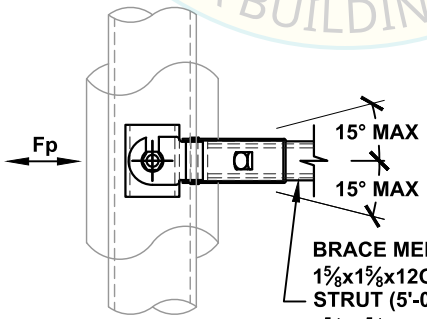

VIEW A-A

NOTES:

1. REF. SECTION A10 OR A20 FOR GENERAL NOTES. MAX ALLOWABLE FORCE, Fp, MAY BE LIMITED BY ANCHORAGE CAPACITY.
2. PROVIDE ROD STIFFENING ONLY WHERE SEISMIC BRACKETS ARE ATTACHED TO THE ROD AND ROD LENGTH (L) EXCEEDS 31". REF. APPROPRIATE M10 PAGES FOR DETAIL.
3. PROVIDE (1) 1/2" DIA. CONNECTION IN CENTER HOLE WHEN STRUT BRACE IS INSTALLED INSIDE THE BRACKET AND (2) 1/2" DIA. CONNECTIONS IN (2) OUTER HOLES WHEN THE BRACE IS INSTALLED OUTSIDE OF THE BRACKET. REF. X2.3 FOR CONNECTION DETAILS.
4. FOR PIPE/CONDUIT SIZES UP TO 5"Ø MAX, USE RESPECTIVE MW-SPC SIZE (REF. X8.3-X8.3.1) OR USE MW-WPL-63 (REF. X8.4).
5. REF. SECTION A15 OR A25 FOR ALTERNATE ARRANGEMENTS OF SEISMIC BRACES.
6. REF. PAGE A19.0 OR A28.0 FOR PIPE/CONDUIT CLAMP OPTION.

REVIEWED FOR CODE COMPLIANCE
HCAI
OPM-0043
BY: William Staehlin
DATE: 01/23/2023
CALIFORNIA BUILDING CODE 2022

MASON WEST
1601 E. Miraloma Ave. Placentia, CA 92870
TEL (714) 630 - 0701, www.masonwest.com

Jiefu "Jeff" Zhang, SE
California SE No. S5270

PAGE
C1.31

HANGER ROD DIAMETER = 5/8"

PIPING/CONDUIT LONGITUDINAL SEISMIC SOLID BRACING SYSTEM 5"Ø PIPE/CONDUIT MAX

KIT OPTIONS
S20L
S2012L
SH512L
SH520L

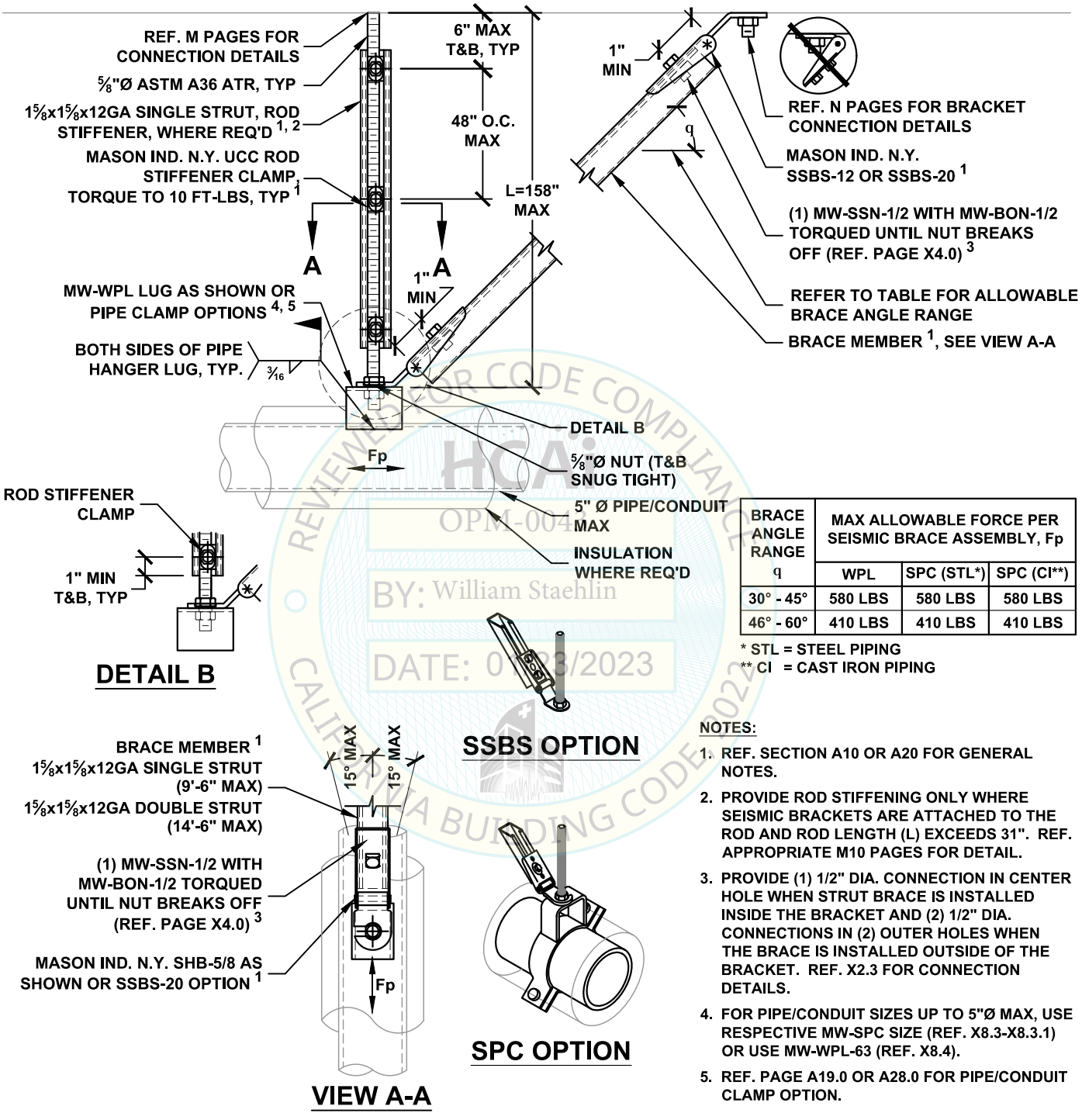

DETAIL B

SSBS OPTION

VIEW A-A

SPC OPTION

BRACE ANGLE RANGE q	MAX ALLOWABLE FORCE PER SEISMIC BRACE ASSEMBLY, Fp		
	WPL	SPC (STL*)	SPC (CI**)
30° - 45°	580 LBS	580 LBS	580 LBS
46° - 60°	410 LBS	410 LBS	410 LBS

* STL = STEEL PIPING
** CI = CAST IRON PIPING

NOTES:

1. REF. SECTION A10 OR A20 FOR GENERAL NOTES.
2. PROVIDE ROD STIFFENING ONLY WHERE SEISMIC BRACKETS ARE ATTACHED TO THE ROD AND ROD LENGTH (L) EXCEEDS 31". REF. APPROPRIATE M10 PAGES FOR DETAIL.
3. PROVIDE (1) 1/2" DIA. CONNECTION IN CENTER HOLE WHEN STRUT BRACE IS INSTALLED INSIDE THE BRACKET AND (2) 1/2" DIA. CONNECTIONS IN (2) OUTER HOLES WHEN THE BRACE IS INSTALLED OUTSIDE OF THE BRACKET. REF. X2.3 FOR CONNECTION DETAILS.
4. FOR PIPE/CONDUIT SIZES UP TO 5"Ø MAX, USE RESPECTIVE MW-SPC SIZE (REF. X8.3-X8.3.1) OR USE MW-WPL-63 (REF. X8.4).
5. REF. PAGE A19.0 OR A28.0 FOR PIPE/CONDUIT CLAMP OPTION.

HCAI REVIEWED FOR CODE COMPLIANCE
OPM-0043
BY: William Staehlin
DATE: 01/23/2023
CALIFORNIA BUILDING CODE 2022

MASON WEST
1601 E. Miraloma Ave. Placentia, CA 92870
TEL (714) 630 - 0701, www.masonwest.com

Jiefu "Jeff" Zhang, SE
California SE No. S5270

PAGE
C1.32

HANGER ROD DIAMETER = 5/8"	PIPING/CONDUIT LONGITUDINAL SEISMIC SOLID BRACING SYSTEM 5"Ø PIPE/CONDUIT MAX	KIT OPTIONS SH54L SH5L

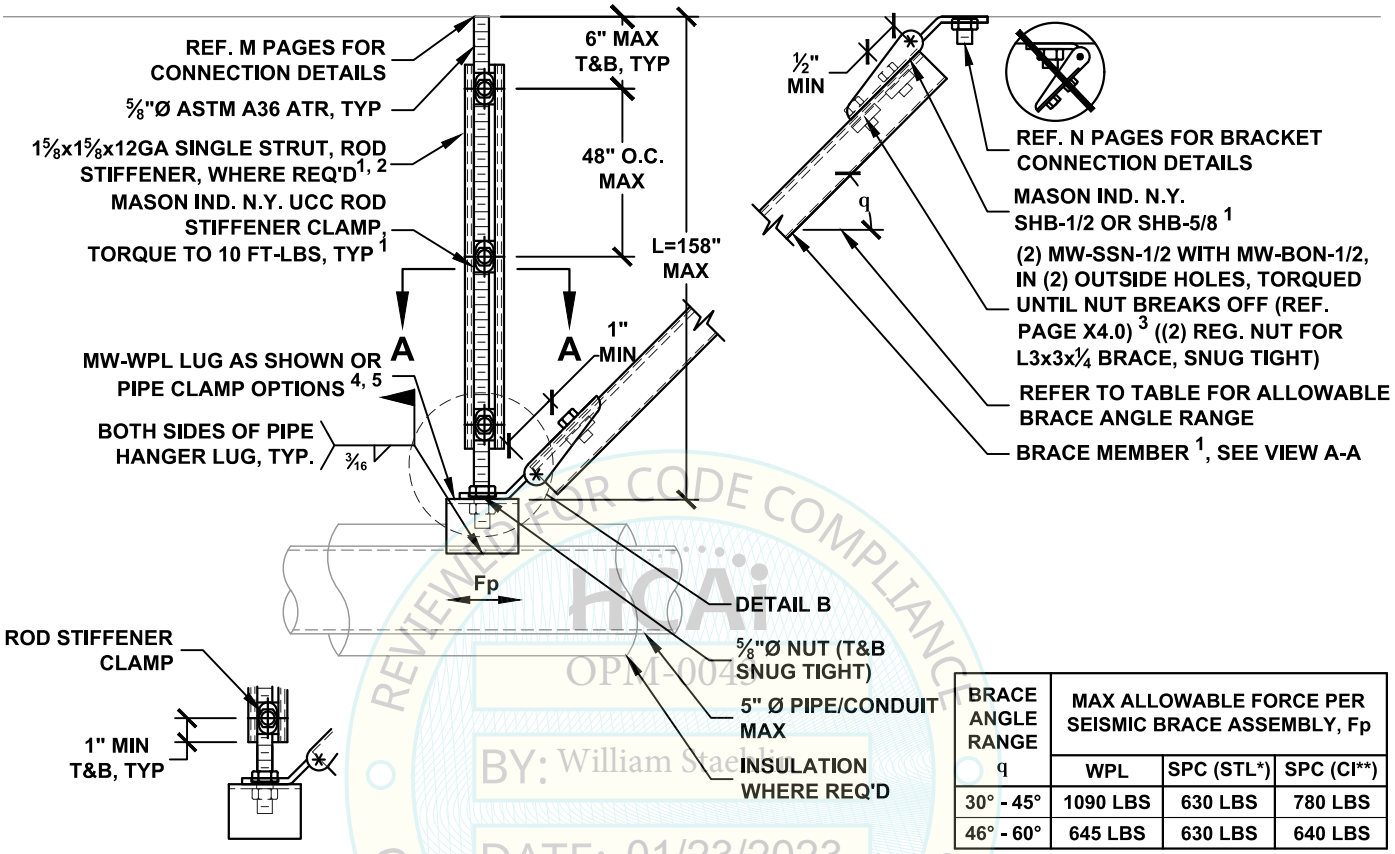

DETAIL B

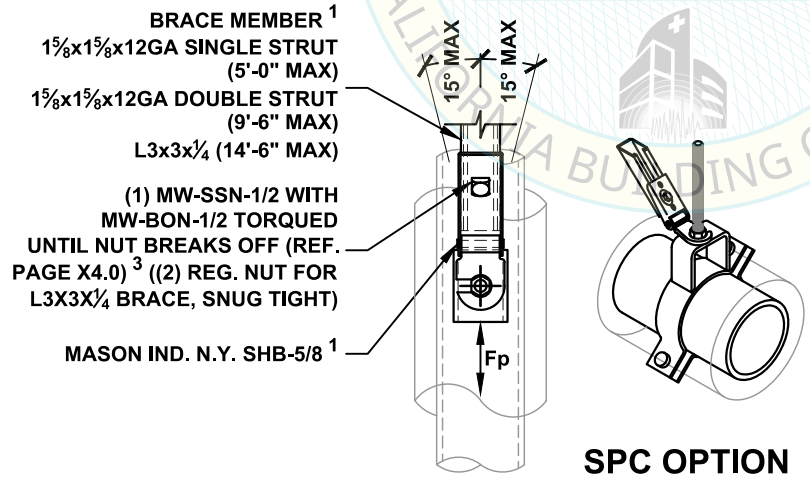

VIEW A-A

SPC OPTION

BRACE ANGLE RANGE q	MAX ALLOWABLE FORCE PER SEISMIC BRACE ASSEMBLY, Fp		
	WPL	SPC (STL*)	SPC (CI**)
30° - 45°	1090 LBS	630 LBS	780 LBS
46° - 60°	645 LBS	630 LBS	640 LBS

* STL = STEEL PIPING
** CI = CAST IRON PIPING

NOTES:

1. REF. SECTION A10 OR A20 FOR GENERAL NOTES. MAX ALLOWABLE FORCE, Fp, MAY BE LIMITED BY ANCHORAGE CAPACITY.
2. PROVIDE ROD STIFFENING ONLY WHERE SEISMIC BRACKETS ARE ATTACHED TO THE ROD AND ROD LENGTH (L) EXCEEDS 31". REF. APPROPRIATE M10 PAGES FOR DETAIL.
3. PROVIDE (1) 1/2" DIA. CONNECTION IN CENTER HOLE WHEN STRUT BRACE IS INSTALLED INSIDE THE BRACKET AND (2) 1/2" DIA. CONNECTIONS IN (2) OUTER HOLES WHEN THE BRACE IS INSTALLED OUTSIDE OF THE BRACKET. REF. X2.3 FOR CONNECTION DETAILS.
4. FOR PIPE/CONDUIT SIZES UP TO 5"Ø MAX, USE RESPECTIVE MW-SPC SIZE (REF. X8.3-X8.3.1) OR USE MW-WPL-63 (REF. X8.4).
5. REF. PAGE A19.0 OR A28.0 FOR PIPE/CONDUIT CLAMP OPTION.

REVIEWED FOR CODE COMPLIANCE
HCAi
OPM-0043
BY: William Staehlin
DATE: 01/23/2023
CALIFORNIA BUILDING CODE, 2022

MASON WEST
1601 E. Miraloma Ave. Placentia, CA 92870
TEL (714) 630 - 0701, www.masonwest.com

Jiefu "Jeff" Zhang, SE
California SE No. S5270

HANGER ROD DIAMETER = 5/8"	PIPING/CONDUIT ALL-DIRECTIONAL SEISMIC SOLID BRACING SYSTEM 5"Ø PIPE/CONDUIT MAX	KIT OPTIONS S20A S2012A SH512A SH520A

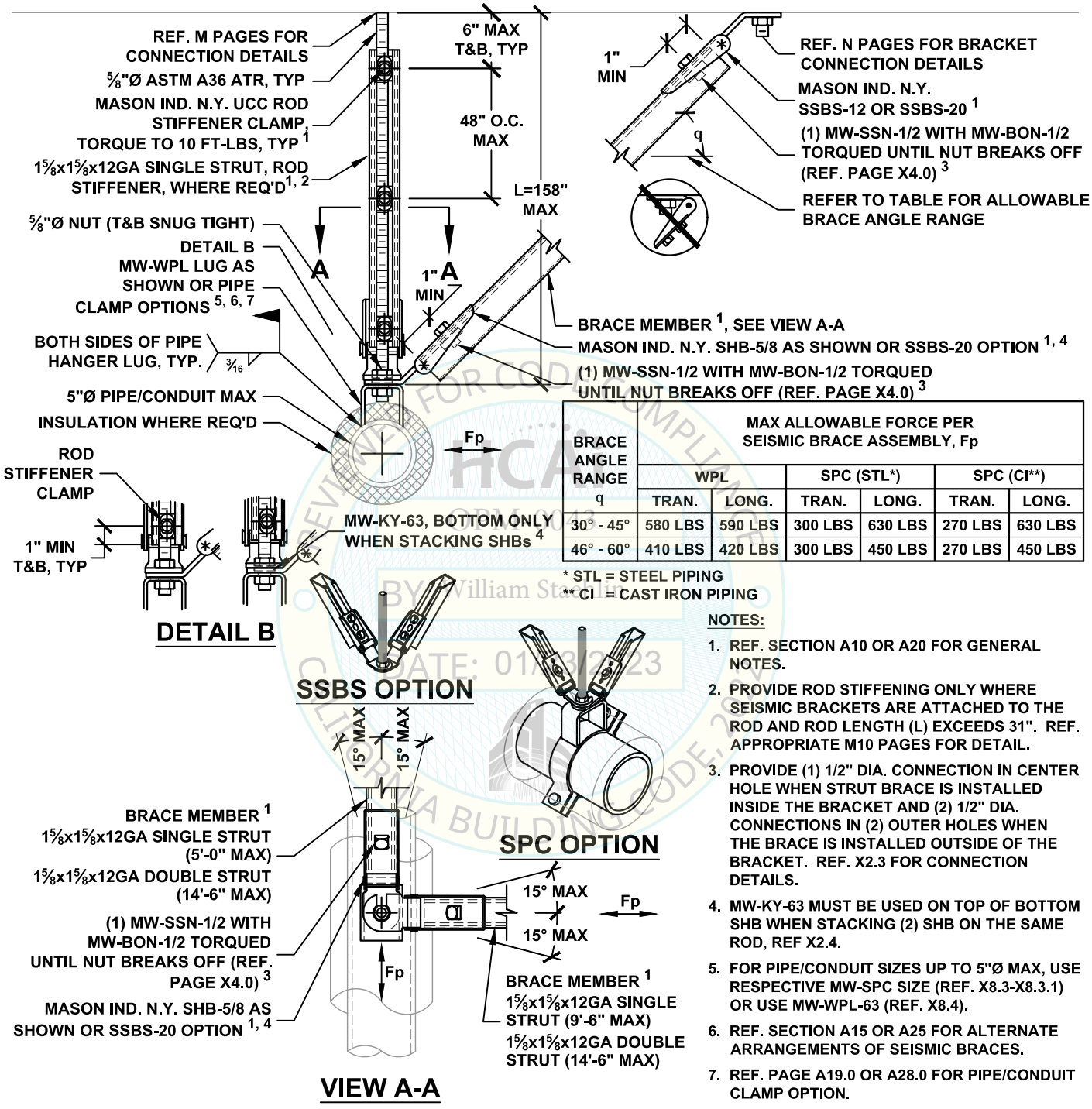

BRACE ANGLE RANGE q	MAX ALLOWABLE FORCE PER SEISMIC BRACE ASSEMBLY, Fp					
	WPL		SPC (STL*)		SPC (CI**)	
	TRAN.	LONG.	TRAN.	LONG.	TRAN.	LONG.
30° - 45°	580 LBS	590 LBS	300 LBS	630 LBS	270 LBS	630 LBS
46° - 60°	410 LBS	420 LBS	300 LBS	450 LBS	270 LBS	450 LBS

* STL = STEEL PIPING
** CI = CAST IRON PIPING

NOTES:

1. REF. SECTION A10 OR A20 FOR GENERAL NOTES.
2. PROVIDE ROD STIFFENING ONLY WHERE SEISMIC BRACKETS ARE ATTACHED TO THE ROD AND ROD LENGTH (L) EXCEEDS 31". REF. APPROPRIATE M10 PAGES FOR DETAIL.
3. PROVIDE (1) 1/2" DIA. CONNECTION IN CENTER HOLE WHEN STRUT BRACE IS INSTALLED INSIDE THE BRACKET AND (2) 1/2" DIA. CONNECTIONS IN (2) OUTER HOLES WHEN THE BRACE IS INSTALLED OUTSIDE OF THE BRACKET. REF. X2.3 FOR CONNECTION DETAILS.
4. MW-KY-63 MUST BE USED ON TOP OF BOTTOM SHB WHEN STACKING (2) SHB ON THE SAME ROD, REF X2.4.
5. FOR PIPE/CONDUIT SIZES UP TO 5"Ø MAX, USE RESPECTIVE MW-SPC SIZE (REF. X8.3-X8.3.1) OR USE MW-WPL-63 (REF. X8.4).
6. REF. SECTION A15 OR A25 FOR ALTERNATE ARRANGEMENTS OF SEISMIC BRACES.
7. REF. PAGE A19.0 OR A28.0 FOR PIPE/CONDUIT CLAMP OPTION.

OPM-0043 REVIEWED FOR CODE COMPLIANCE BY William Staehlin DATE: 01/23/2023 CALIFORNIA BUILDING CODE, 2019

MASON WEST
1601 E. Miraloma Ave. Placentia, CA 92870
TEL (714) 630 - 0701, www.masonwest.com

Jiefu "Jeff" Zhang, SE
California SE No. S5270

PAGE
C1.34

HANGER ROD DIAMETER = 5/8"

PIPING/CONDUIT ALL-DIRECTIONAL SEISMIC SOLID BRACING SYSTEM 5"Ø PIPE/CONDUIT MAX

KIT OPTIONS
SH54A
SH5A

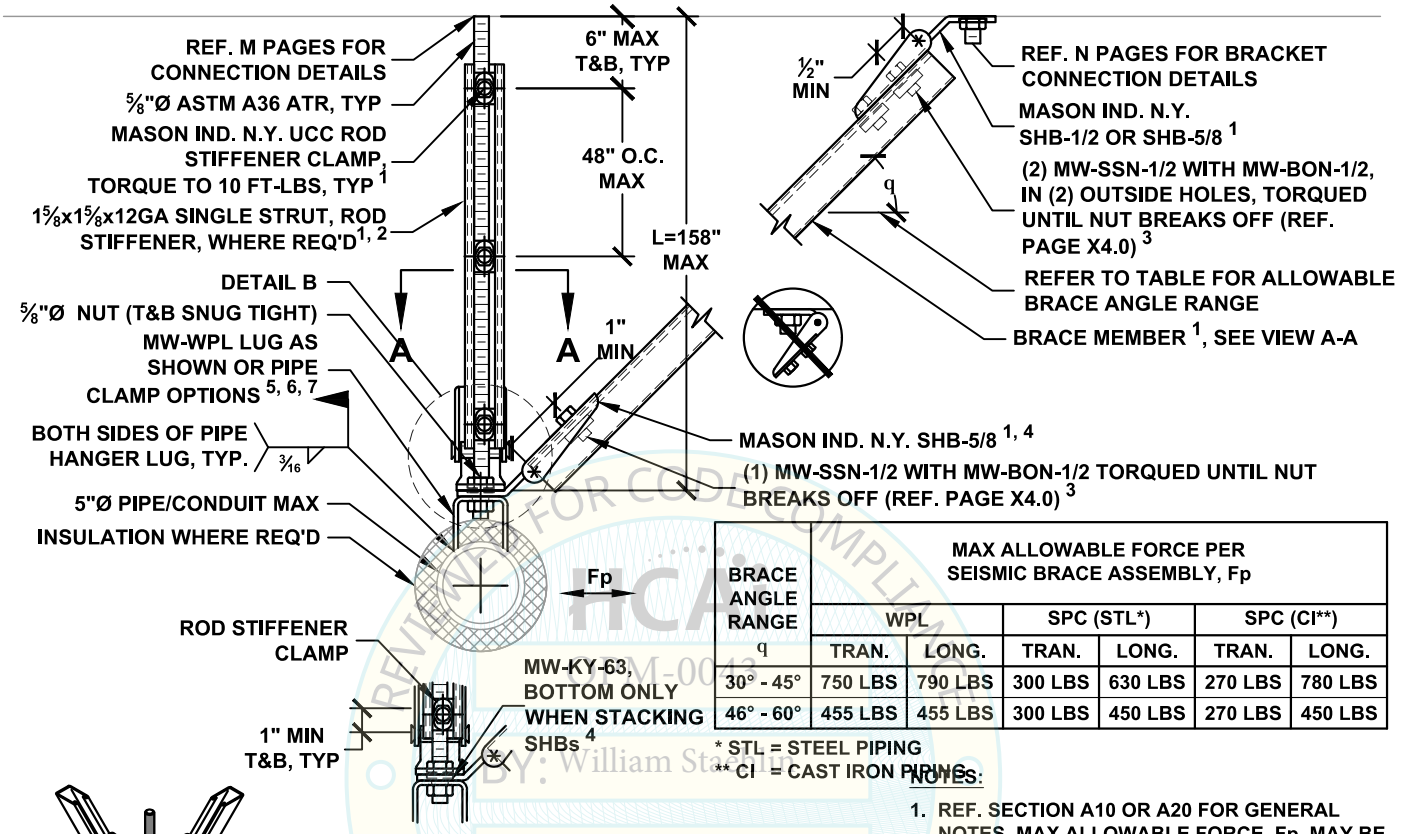

BRACE ANGLE RANGE q	MAX ALLOWABLE FORCE PER SEISMIC BRACE ASSEMBLY, Fp					
	WPL		SPC (STL*)		SPC (CI**)	
	TRAN.	LONG.	TRAN.	LONG.	TRAN.	LONG.
30° - 45°	750 LBS	790 LBS	300 LBS	630 LBS	270 LBS	780 LBS
46° - 60°	455 LBS	455 LBS	300 LBS	450 LBS	270 LBS	450 LBS

* STL = STEEL PIPING
** CI = CAST IRON PIPING

DETAIL B

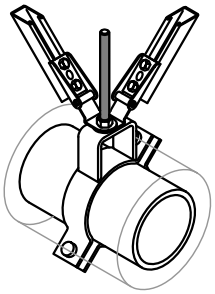

SPC OPTION

VIEW A-A

NOTES:

1. REF. SECTION A10 OR A20 FOR GENERAL NOTES. MAX ALLOWABLE FORCE, Fp, MAY BE LIMITED BY ANCHORAGE CAPACITY.
2. PROVIDE ROD STIFFENING ONLY WHERE SEISMIC BRACKETS ARE ATTACHED TO THE ROD AND ROD LENGTH (L) EXCEEDS 31". REF. APPROPRIATE M10 PAGES FOR DETAIL.
3. PROVIDE (1) 1/2" DIA. CONNECTION IN CENTER HOLE WHEN STRUT BRACE IS INSTALLED INSIDE THE BRACKET AND (2) 1/2" DIA. CONNECTIONS IN (2) OUTER HOLES WHEN THE BRACE IS INSTALLED OUTSIDE OF THE BRACKET. REF. X2.3 FOR CONNECTION DETAILS.
4. MW-KY-63 MUST BE USED ON TOP OF BOTTOM SHB WHEN STACKING (2) SHB ON THE SAME ROD, REF X2.4.
5. FOR PIPE/CONDUIT SIZES UP TO 5"Ø MAX, USE RESPECTIVE MW-SPC SIZE (REF. X8.3-X8.3.1) OR USE MW-WPL-63 (REF. X8.4).
6. REF. SECTION A15 OR A25 FOR ALTERNATE ARRANGEMENTS OF SEISMIC BRACES.
7. REF. PAGE A19.0 OR A28.0 FOR PIPE/CONDUIT CLAMP OPTION.

PREVIEW FOR CODE COMPLIANCE
OPM-0043
REVIEWED BY: William Staehlin
DATE: 01/23/2023
CALIFORNIA BUILDING CODE, 2022

MASON WEST
1601 E. Miraloma Ave. Placentia, CA 92870
TEL (714) 630 - 0701, www.masonwest.com

Jiefu "Jeff" Zhang, SE
California SE No. S5270

PAGE
C1.35

HANGER ROD DIAMETER = ¾"

PIPING TRANSVERSE SEISMIC SOLID BRACING SYSTEM 12"Ø PIPE MAX

KIT OPTIONS
S20T
S2012T
SH612T
SH620T

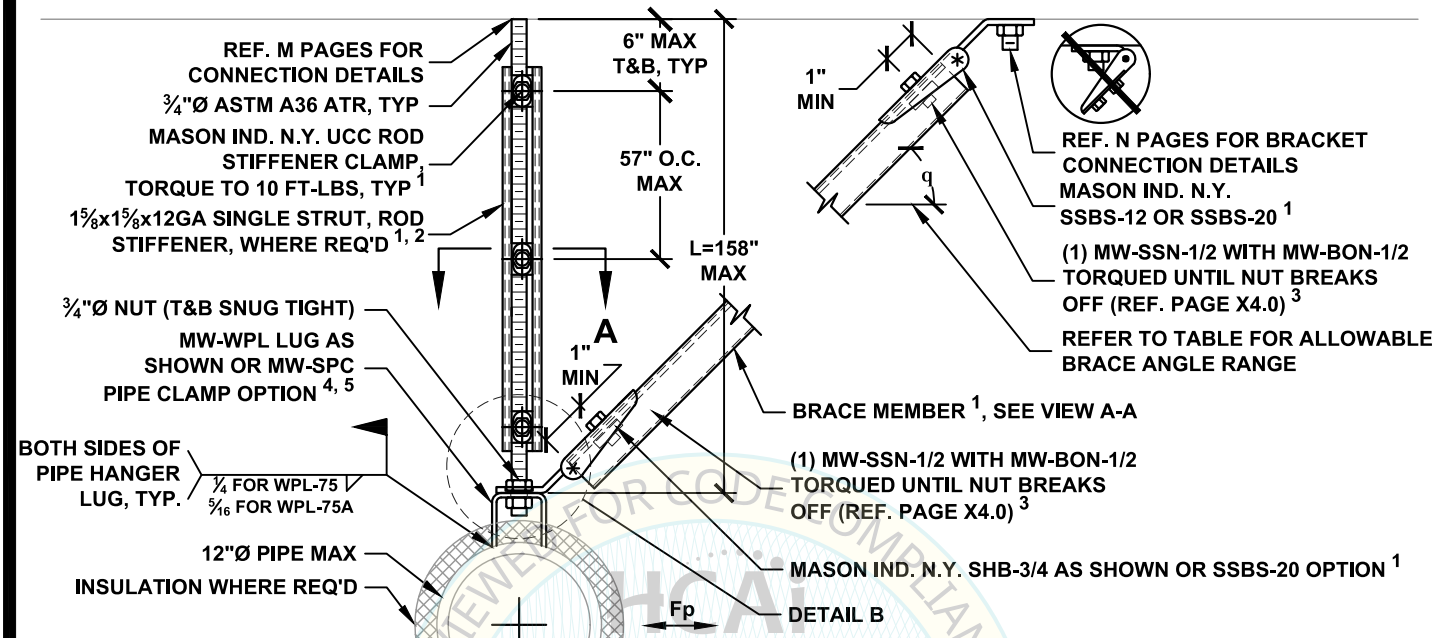

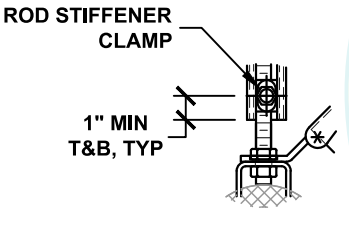

DETAIL B **SSBS OPTION**

BRACE ANGLE RANGE q	MAX ALLOWABLE FORCE PER SEISMIC BRACE ASSEMBLY, Fp				
	WPL	8"Ø PIPE MAX		12"Ø PIPE MAX	
		SPC (STL*)	SPC (CI**)	SPC (STL*)	SPC (CI**)
30° - 45°	630 LBS	580 LBS	630 LBS	250 LBS	370 LBS
46° - 60°	570 LBS	570 LBS	570 LBS	250 LBS	370 LBS

* STL = STEEL PIPING
** CI = CAST IRON PIPING

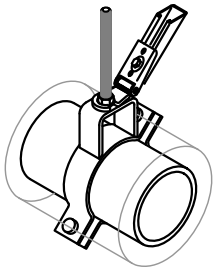

SPC OPTION

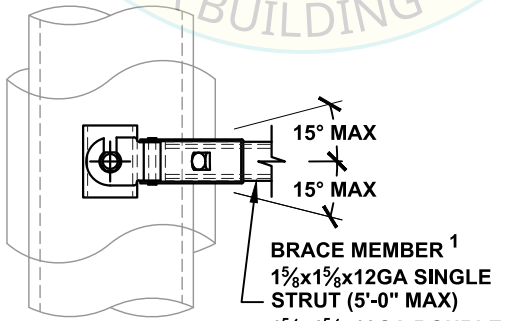

VIEW A-A

NOTES:

1. REF. SECTION A10 FOR GENERAL NOTES.
2. PROVIDE ROD STIFFENING ONLY WHERE SEISMIC BRACKETS ARE ATTACHED TO THE ROD AND ROD LENGTH (L) EXCEEDS 37". REF. APPROPRIATE M10 PAGES FOR DETAIL.
3. PROVIDE (1) 1/2" DIA. CONNECTION IN CENTER HOLE WHEN STRUT BRACE IS INSTALLED INSIDE THE BRACKET AND (2) 1/2" DIA. CONNECTIONS IN (2) OUTER HOLES WHEN THE BRACE IS INSTALLED OUTSIDE OF THE BRACKET. REF. X2.3 FOR CONNECTION DETAILS.
4. FOR PIPE SIZES UP TO 12"Ø MAX, USE RESPECTIVE MW-SPC SIZE (REF. X8.3-X8.3.1) OR USE MW-WPL-75 OR -75A (REF. X8.4) FOR UP TO 8"Ø OR 12"Ø MAX, RESPECTIVELY.
5. REF. SECTION A15 FOR ALTERNATIVE ARRANGEMENT OF SEISMIC BRACES.

OPM-0043
BY: William Staehlin
DATE: 01/23/2023
REVIEWED FOR CODE COMPLIANCE
CALIFORNIA BUILDING CODE

MASON WEST
1601 E. Miraloma Ave. Placentia, CA 92870
TEL (714) 630 - 0701, www.masonwest.com

Jiefu "Jeff" Zhang, SE
California SE No. S5270

HANGER ROD DIAMETER = ¾"	PIPING TRANSVERSE SEISMIC SOLID BRACING SYSTEM 12"Ø PIPE MAX	KIT OPTIONS SH64T SH65T SH6T

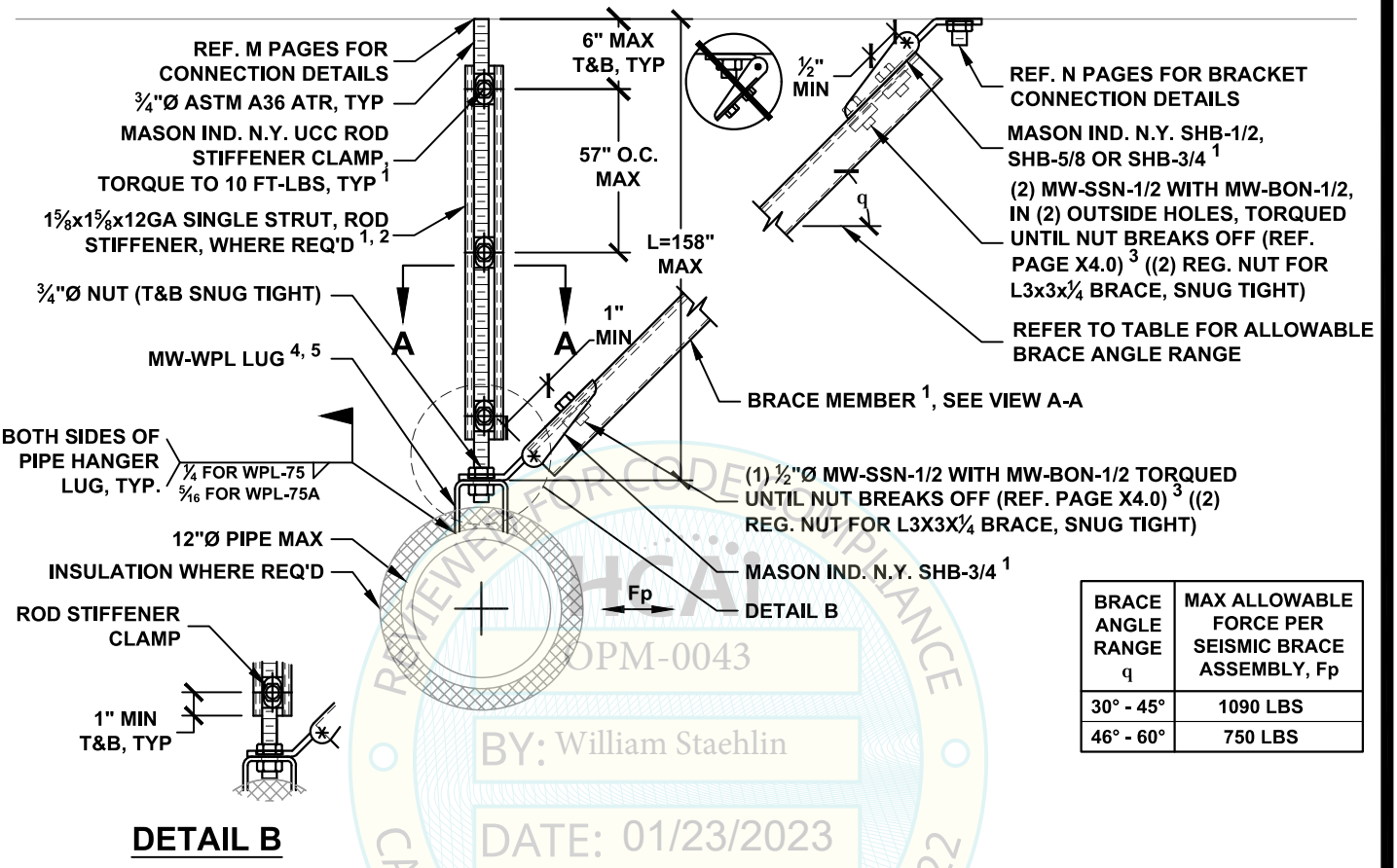

DETAIL B

BRACE ANGLE RANGE q	MAX ALLOWABLE FORCE PER SEISMIC BRACE ASSEMBLY, Fp
30° - 45°	1090 LBS
46° - 60°	750 LBS

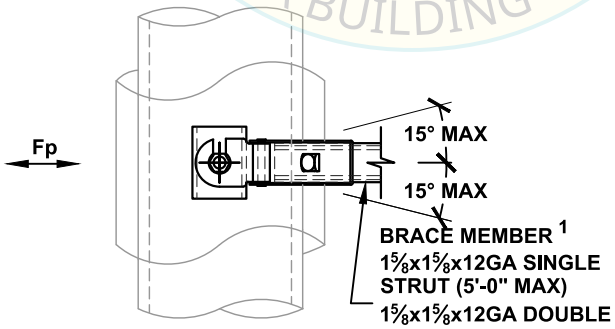

VIEW A-A

REVIEWED FOR CODE COMPLIANCE
OSHPD
OPM-0043
BY: William Staehlin
DATE: 01/23/2023
CALIFORNIA BUILDING CODE 2022

NOTES:

1. REF. SECTION A10 FOR GENERAL NOTES. MAX ALLOWABLE FORCE, Fp, MAY BE LIMITED BY ANCHORAGE CAPACITY.
2. PROVIDE ROD STIFFENING ONLY WHERE SEISMIC BRACKETS ARE ATTACHED TO THE ROD AND ROD LENGTH (L) EXCEEDS 37". REF. APPROPRIATE M10 PAGES FOR DETAIL.
3. PROVIDE (1) 1/2" DIA. CONNECTION IN CENTER HOLE WHEN STRUT BRACE IS INSTALLED INSIDE THE BRACKET AND (2) 1/2" DIA. CONNECTIONS IN (2) OUTER HOLES WHEN THE BRACE IS INSTALLED OUTSIDE OF THE BRACKET. REF. X2.3 FOR CONNECTION DETAILS.
4. FOR PIPE SIZES UP TO 8"Ø OR 12"Ø MAX, USE MW-WPL-75 OR MW-WPL-75A (REF. X8.4), RESPECTIVELY.
5. REF. SECTION A15 FOR ALTERNATE ARRANGEMENTS OF SEISMIC BRACES.

MASON WEST
1601 E. Miraloma Ave. Placentia, CA 92870
TEL (714) 630 - 0701, www.masonwest.com

Jiefu "Jeff" Zhang, SE
California SE No. S5270

HANGER ROD DIAMETER = ¾"

PIPING LONGITUDINAL SEISMIC SOLID BRACING SYSTEM 12"Ø PIPE MAX

KIT OPTIONS
S20L
S2012L
SH612L
SH620L

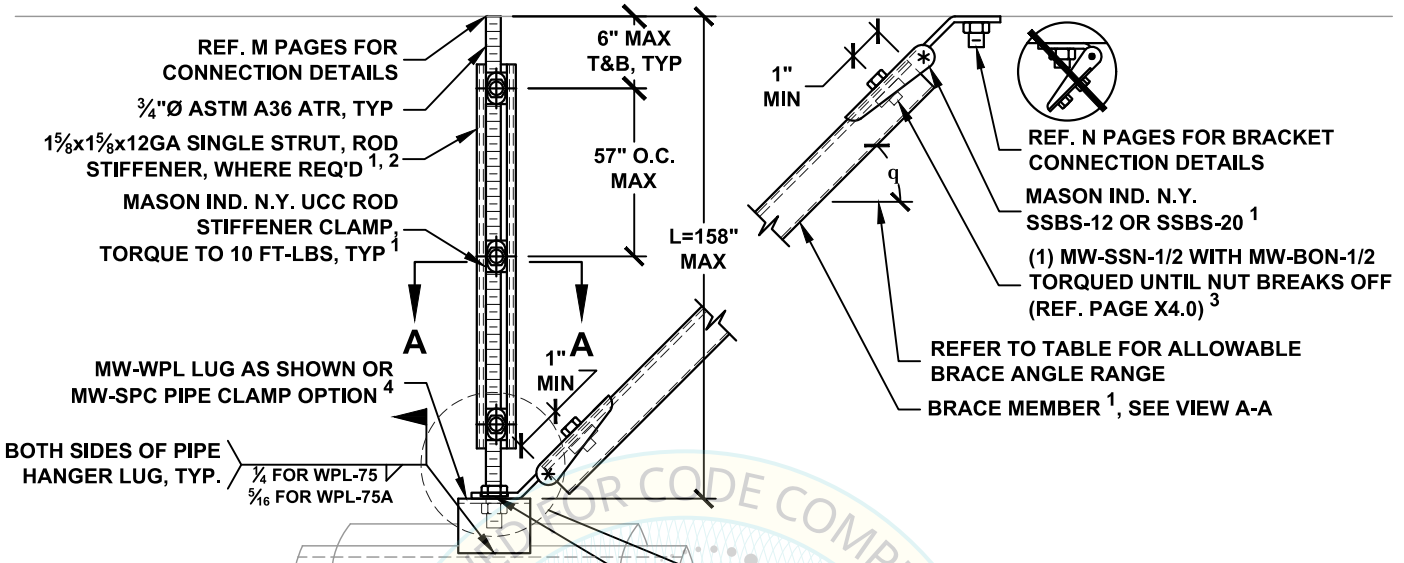

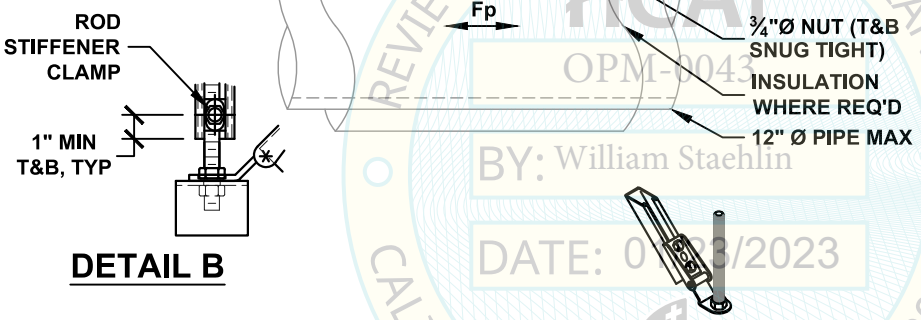

DETAIL B

BRACE ANGLE RANGE q	MAX ALLOWABLE FORCE PER SEISMIC BRACE ASSEMBLY, Fp		
	WPL	SPC (STL*)	SPC (CI**)
30° - 45°	630 LBS	630 LBS	630 LBS
46° - 60°	570 LBS	570 LBS	570 LBS

* STL = STEEL PIPING
** CI = CAST IRON PIPING

SSBS OPTION

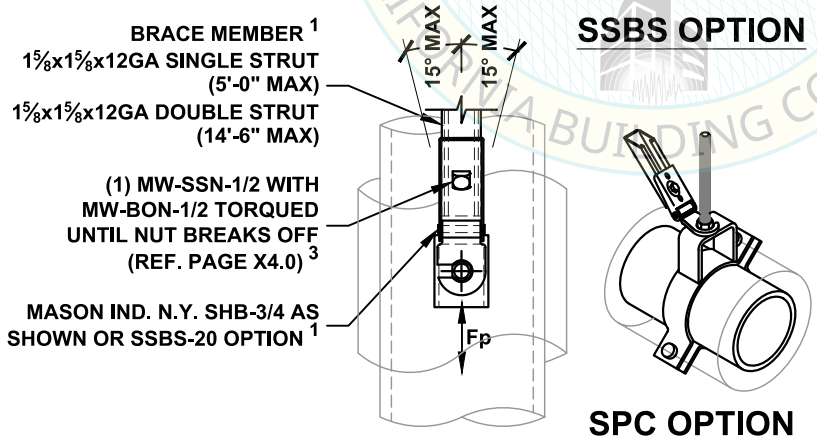

VIEW A-A

SPC OPTION

NOTES:

1. REF. SECTION A10 FOR GENERAL NOTES.
2. PROVIDE ROD STIFFENING ONLY WHERE SEISMIC BRACKETS ARE ATTACHED TO THE ROD AND ROD LENGTH (L) EXCEEDS 37". REF. APPROPRIATE M10 PAGES FOR DETAIL.
3. PROVIDE (1) 1/2" DIA. CONNECTION IN CENTER HOLE WHEN STRUT BRACE IS INSTALLED INSIDE THE BRACKET AND (2) 1/2" DIA. CONNECTIONS IN (2) OUTER HOLES WHEN THE BRACE IS INSTALLED OUTSIDE OF THE BRACKET. REF. X2.3 FOR CONNECTION DETAILS.
4. FOR PIPE SIZES UP TO 12"Ø MAX, USE RESPECTIVE MW-SPC SIZE (REF. X8.3-X8.3.1) OR USE MW-WPL-75 OR -75A (REF. X8.4) FOR UP TO 8"Ø OR 12"Ø MAX, RESPECTIVELY.

HCAi
REVIEWED FOR CODE COMPLIANCE
OPM-0043
BY: William Staehlin
DATE: 01/23/2023
CALIFORNIA BUILDING CODE, 2022

MASON WEST
1601 E. Miraloma Ave. Placentia, CA 92870
TEL (714) 630 - 0701, www.masonwest.com

Jiefu "Jeff" Zhang, SE
California SE No. S5270

PAGE
C1.42

HANGER ROD DIAMETER = ¾"	PIPING LONGITUDINAL SEISMIC SOLID BRACING SYSTEM 12"Ø PIPE MAX	KIT OPTIONS SH64L SH65L SH6L

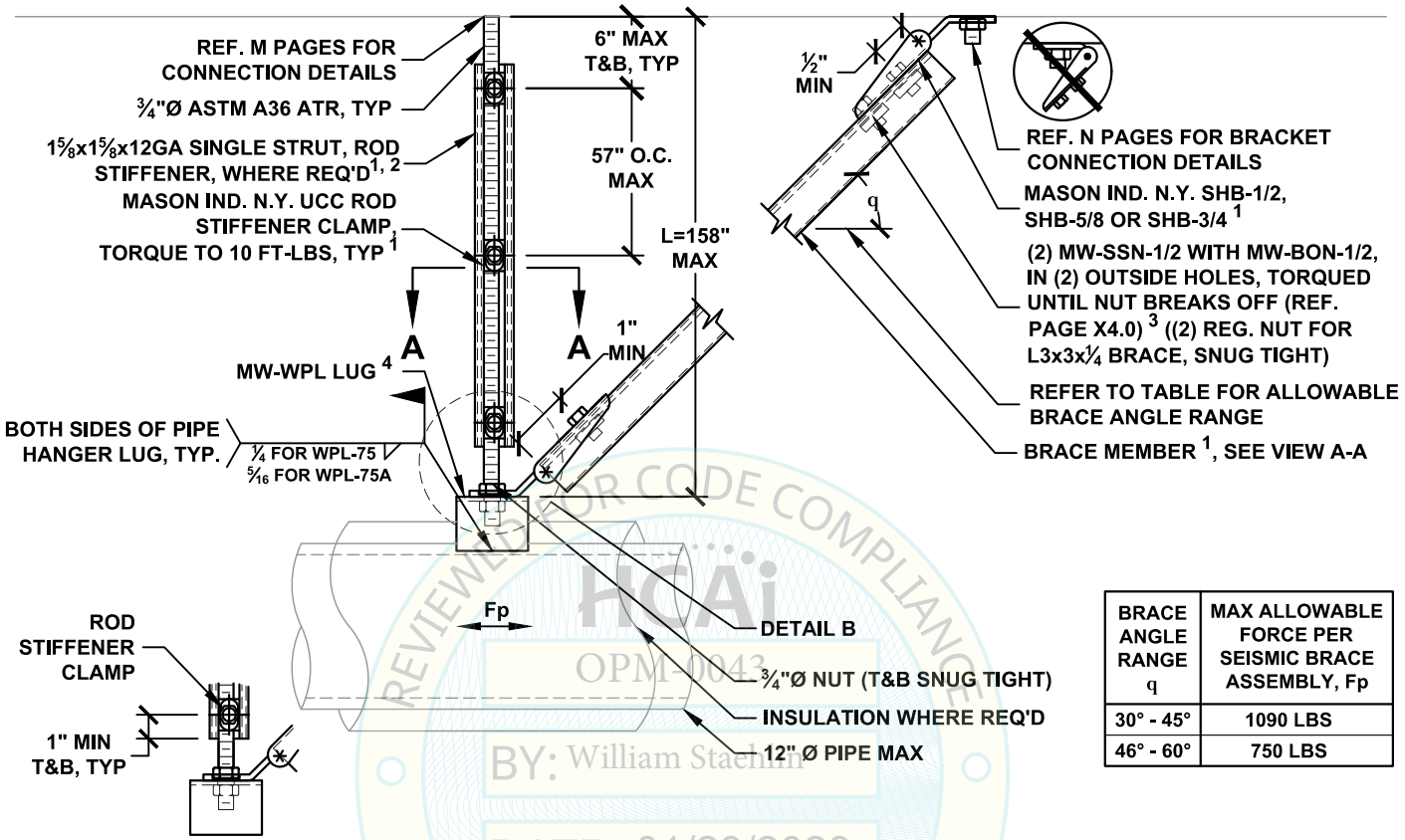

BRACE ANGLE RANGE q	MAX ALLOWABLE FORCE PER SEISMIC BRACE ASSEMBLY, Fp
30° - 45°	1090 LBS
46° - 60°	750 LBS

DETAIL B

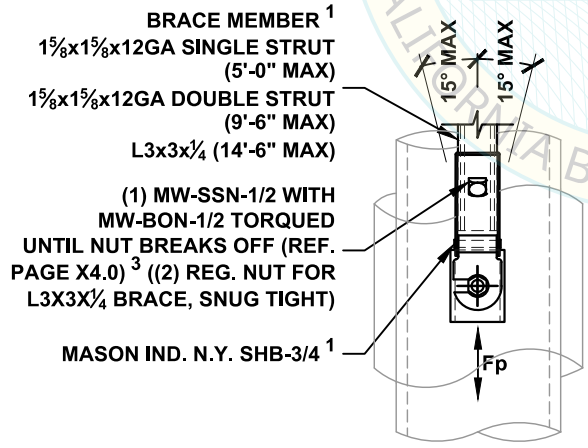

VIEW A-A

NOTES:

1. REF. SECTION A10 FOR GENERAL NOTES. MAX ALLOWABLE FORCE, Fp, MAY BE LIMITED BY ANCHORAGE CAPACITY.
2. PROVIDE ROD STIFFENING ONLY WHERE SEISMIC BRACKETS ARE ATTACHED TO THE ROD AND ROD LENGTH (L) EXCEEDS 37". REF. APPROPRIATE M10 PAGES FOR DETAIL.
3. PROVIDE (1) 1/2" DIA. CONNECTION IN CENTER HOLE WHEN STRUT BRACE IS INSTALLED INSIDE THE BRACKET AND (2) 1/2" DIA. CONNECTIONS IN (2) OUTER HOLES WHEN THE BRACE IS INSTALLED OUTSIDE OF THE BRACKET. REF. X2.3 FOR CONNECTION DETAILS.
4. FOR PIPE SIZES UP TO 8"Ø OR 12"Ø MAX, USE MW-WPL-75 OR MW-WPL-75A (REF. X8.4), RESPECTIVELY.

HCAi
OPM-0043
BY: William Staehlin
DATE: 01/23/2023
REVIEWED FOR CODE COMPLIANCE
CALIFORNIA BUILDING CODE 2022

MASON WEST
1601 E. Miraloma Ave. Placentia, CA 92870
TEL (714) 630 - 0701, www.masonwest.com

Jiefu "Jeff" Zhang, SE
California SE No. S5270

PAGE
C1.43

HANGER ROD DIAMETER = ¾"

PIPING ALL-DIRECTIONAL SEISMIC SOLID BRACING SYSTEM 12"Ø PIPE MAX

KIT OPTIONS
S20A
S2012A
SH612A
SH620A

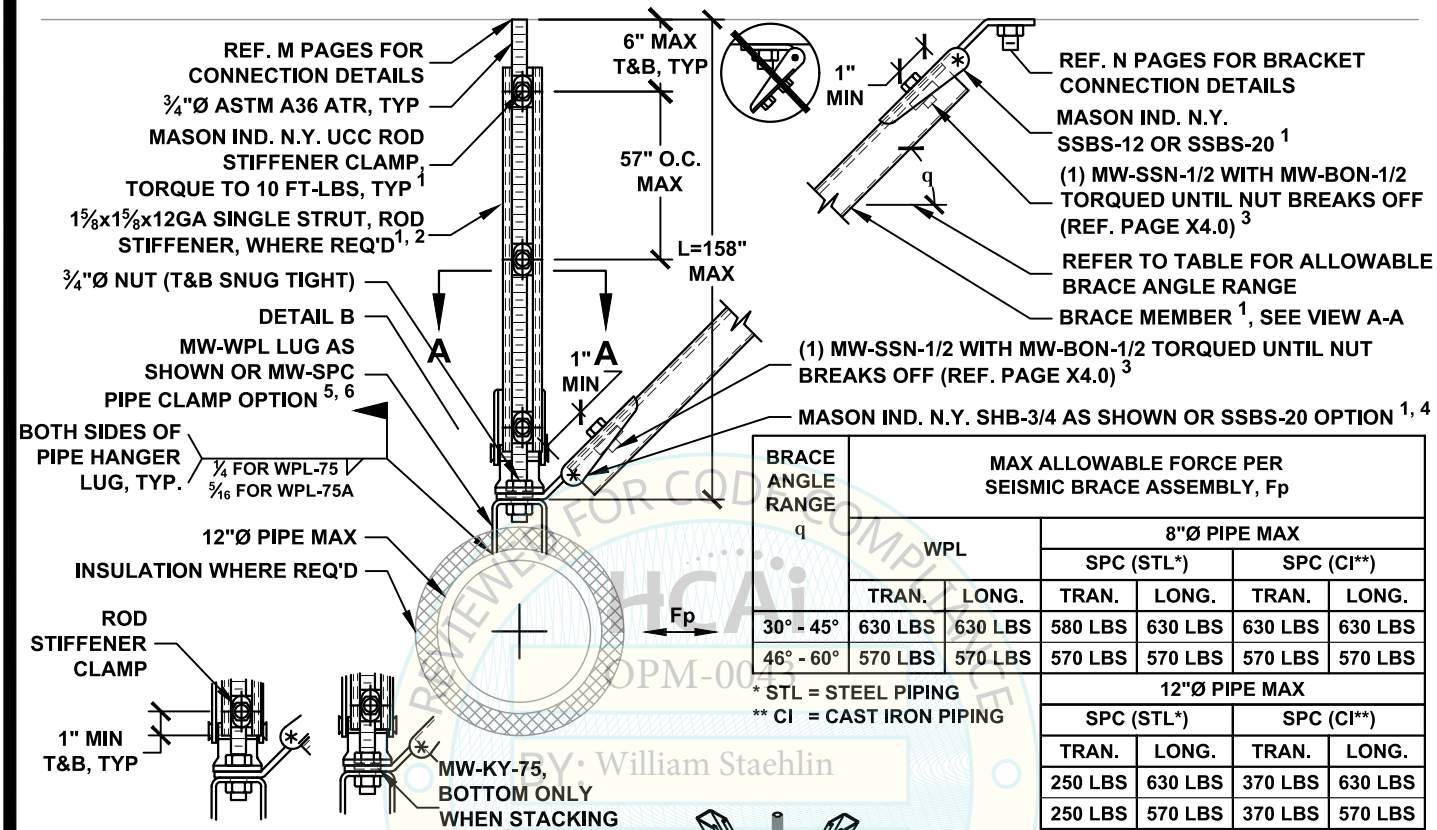

DETAIL B

BRACE ANGLE RANGE q	MAX ALLOWABLE FORCE PER SEISMIC BRACE ASSEMBLY, Fp					
	WPL		8"Ø PIPE MAX			
			SPC (STL*)		SPC (CI**)	
	TRAN.	LONG.	TRAN.	LONG.	TRAN.	LONG.
30° - 45°	630 LBS	630 LBS	580 LBS	630 LBS	630 LBS	630 LBS
46° - 60°	570 LBS	570 LBS	570 LBS	570 LBS	570 LBS	570 LBS

* STL = STEEL PIPING
** CI = CAST IRON PIPING

12"Ø PIPE MAX			
SPC (STL*)		SPC (CI**)	
TRAN.	LONG.	TRAN.	LONG.
250 LBS	630 LBS	370 LBS	630 LBS
250 LBS	570 LBS	370 LBS	570 LBS

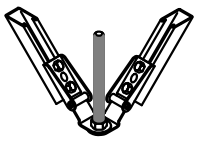

SSBS OPTION

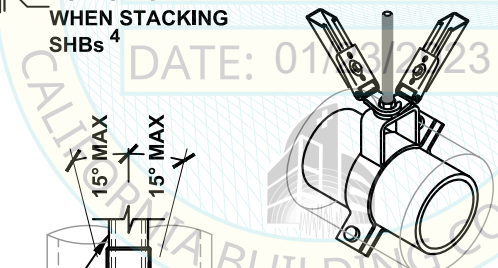

SPC OPTION

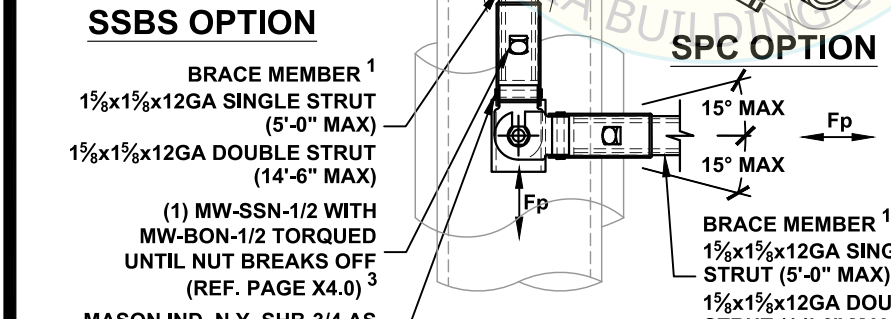

VIEW A-A

NOTES:

1. REF. SECTION A10 FOR GENERAL NOTES.
2. PROVIDE ROD STIFFENING ONLY WHERE SEISMIC BRACKETS ARE ATTACHED TO THE ROD AND ROD LENGTH (L) EXCEEDS 37". REF. APPROPRIATE M10 PAGES FOR DETAIL.
3. PROVIDE (1) 1/2" DIA. CONNECTION IN CENTER HOLE WHEN STRUT BRACE IS INSTALLED INSIDE THE BRACKET AND (2) 1/2" DIA. CONNECTIONS IN (2) OUTER HOLES WHEN THE BRACE IS INSTALLED OUTSIDE OF THE BRACKET. REF. X2.3 FOR CONNECTION DETAILS.
4. MW-KY-75 MUST BE USED ON TOP OF BOTTOM SHB WHEN STACKING (2) SHB ON THE SAME ROD, REF X2.4.
5. FOR PIPE SIZES UP TO 12"Ø MAX, USE RESPECTIVE MW-SPC SIZE (REF. X8.3-X8.3.1) OR USE MW-WPL-75 OR -75A (REF. X8.4) FOR UP TO 8"Ø OR 12"Ø MAX, RESPECTIVELY.
6. REF. SECTION A15 FOR ALTERNATE ARRANGEMENTS OF SEISMIC BRACES.

REVIEWED FOR CODE COMPLIANCE
OPM-0043
BY: William Staehlin
DATE: 01/23/2023
CALIFORNIA BUILDING CODE, 2019

MASON WEST
1601 E. Miraloma Ave. Placentia, CA 92870
TEL (714) 630 - 0701, www.masonwest.com

Jiefu "Jeff" Zhang, SE
California SE No. S5270

PAGE
C1.44

HANGER ROD DIAMETER = ¾"	PIPING ALL-DIRECTIONAL SEISMIC SOLID BRACING SYSTEM 12"Ø PIPE MAX	KIT OPTIONS SH64A SH65A SH6A

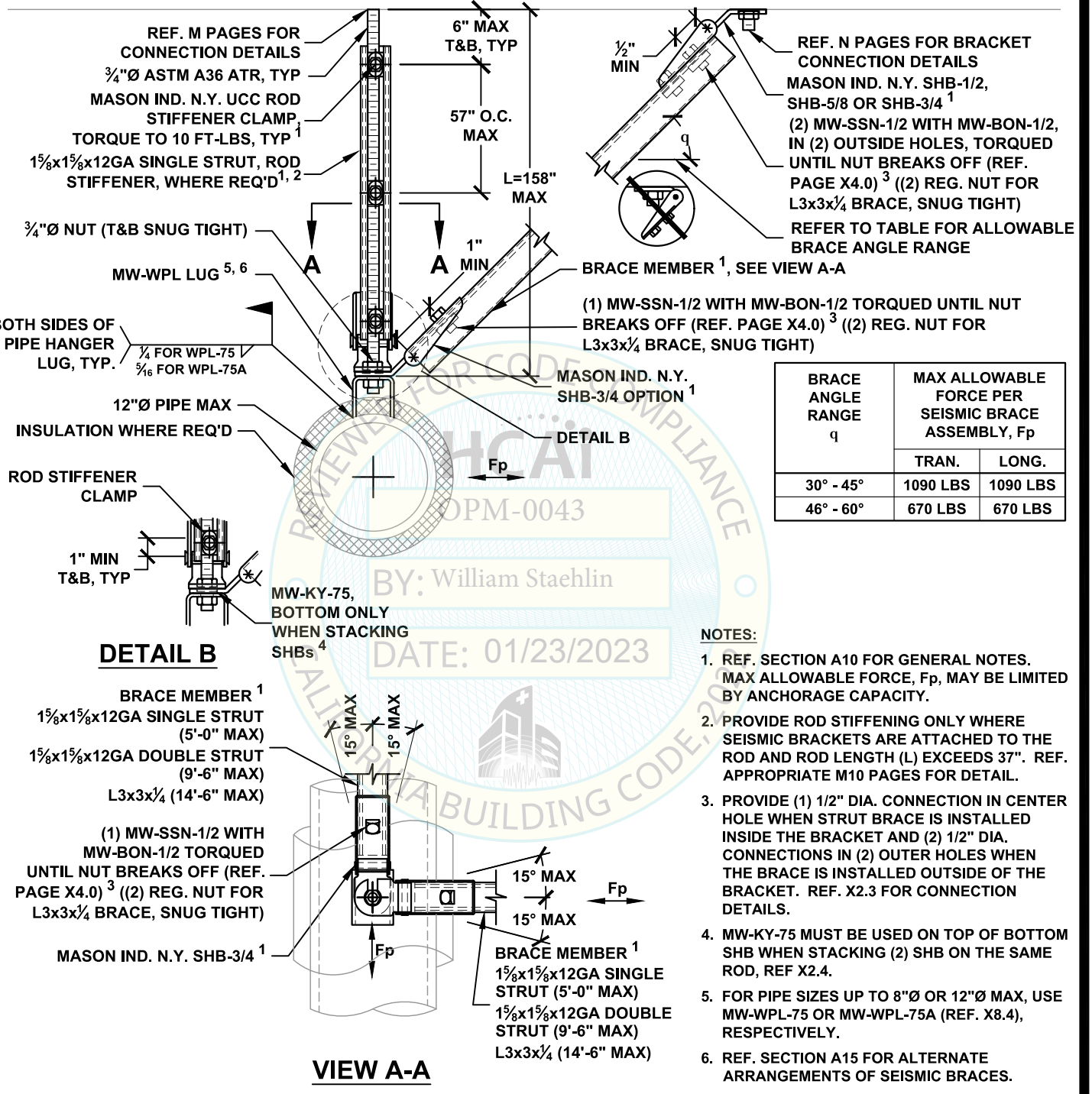

BRACE ANGLE RANGE q	MAX ALLOWABLE FORCE PER SEISMIC BRACE ASSEMBLY, Fp	
	TRAN.	LONG.
30° - 45°	1090 LBS	1090 LBS
46° - 60°	670 LBS	670 LBS

NOTES:

1. REF. SECTION A10 FOR GENERAL NOTES. MAX ALLOWABLE FORCE, Fp, MAY BE LIMITED BY ANCHORAGE CAPACITY.
2. PROVIDE ROD STIFFENING ONLY WHERE SEISMIC BRACKETS ARE ATTACHED TO THE ROD AND ROD LENGTH (L) EXCEEDS 37". REF. APPROPRIATE M10 PAGES FOR DETAIL.
3. PROVIDE (1) 1/2" DIA. CONNECTION IN CENTER HOLE WHEN STRUT BRACE IS INSTALLED INSIDE THE BRACKET AND (2) 1/2" DIA. CONNECTIONS IN (2) OUTER HOLES WHEN THE BRACE IS INSTALLED OUTSIDE OF THE BRACKET. REF. X2.3 FOR CONNECTION DETAILS.
4. MW-KY-75 MUST BE USED ON TOP OF BOTTOM SHB WHEN STACKING (2) SHB ON THE SAME ROD, REF X2.4.
5. FOR PIPE SIZES UP TO 8"Ø OR 12"Ø MAX, USE MW-WPL-75 OR MW-WPL-75A (REF. X8.4), RESPECTIVELY.
6. REF. SECTION A15 FOR ALTERNATE ARRANGEMENTS OF SEISMIC BRACES.

OPM-0043
BY: William Staehlin
DATE: 01/23/2023

MASON WEST
1601 E. Miraloma Ave. Placentia, CA 92870
TEL (714) 630 - 0701, www.masonwest.com

Jiefu "Jeff" Zhang, SE
California SE No. S5270

PAGE
C1.45

HANGER ROD DIAMETER = ¾"	PIPING TRANSVERSE SEISMIC SOLID BRACING SYSTEM 18"Ø PIPE MAX	KIT OPTIONS S3T

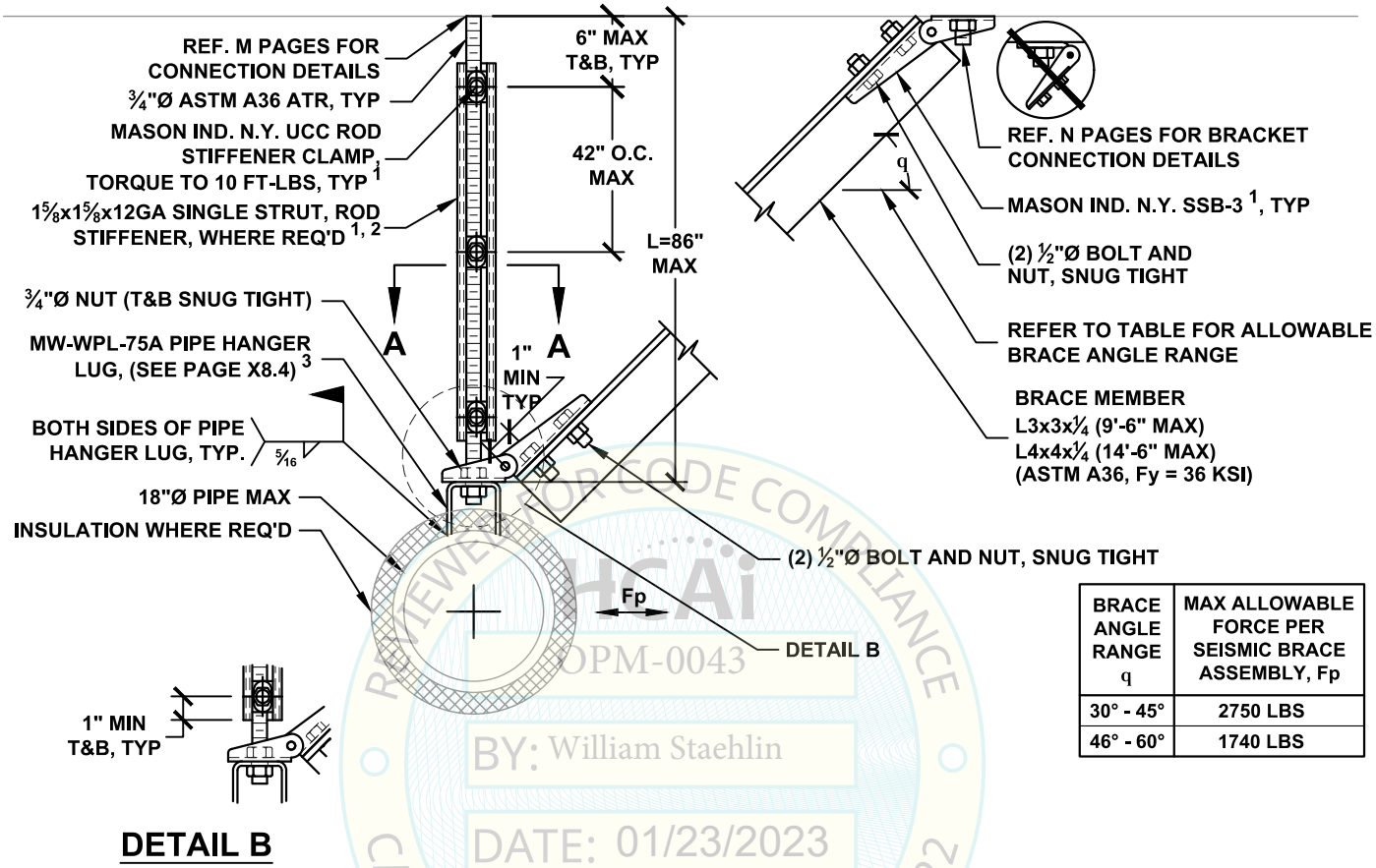

BRACE ANGLE RANGE q	MAX ALLOWABLE FORCE PER SEISMIC BRACE ASSEMBLY, Fp
30° - 45°	2750 LBS
46° - 60°	1740 LBS

DETAIL B

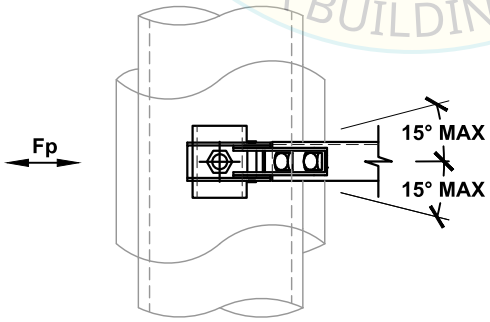

VIEW A-A

REVIEWED FOR CODE COMPLIANCE
HCAi
OPM-0043
BY: William Staehlin
DATE: 01/23/2023
CALIFORNIA BUILDING CODE, 2022

NOTES:

1. REF. SECTION A10 FOR GENERAL NOTES.
2. PROVIDE ROD STIFFENING ONLY WHERE SEISMIC BRACKETS ARE ATTACHED TO THE ROD AND ROD LENGTH (L) EXCEEDS 27". REF. APPROPRIATE M10 PAGES FOR DETAIL.
3. REF. SECTION A15 FOR ALTERNATE ARRANGEMENTS OF SEISMIC BRACES.

MASON WEST
1601 E. Miraloma Ave. Placentia, CA 92870
TEL (714) 630 - 0701, www.masonwest.com

Jiefu "Jeff" Zhang, SE
California SE No. S5270

HANGER ROD DIAMETER = ¾"	PIPING TRANSVERSE SEISMIC SOLID BRACING SYSTEM 18"Ø PIPE MAX	KIT OPTIONS S3T

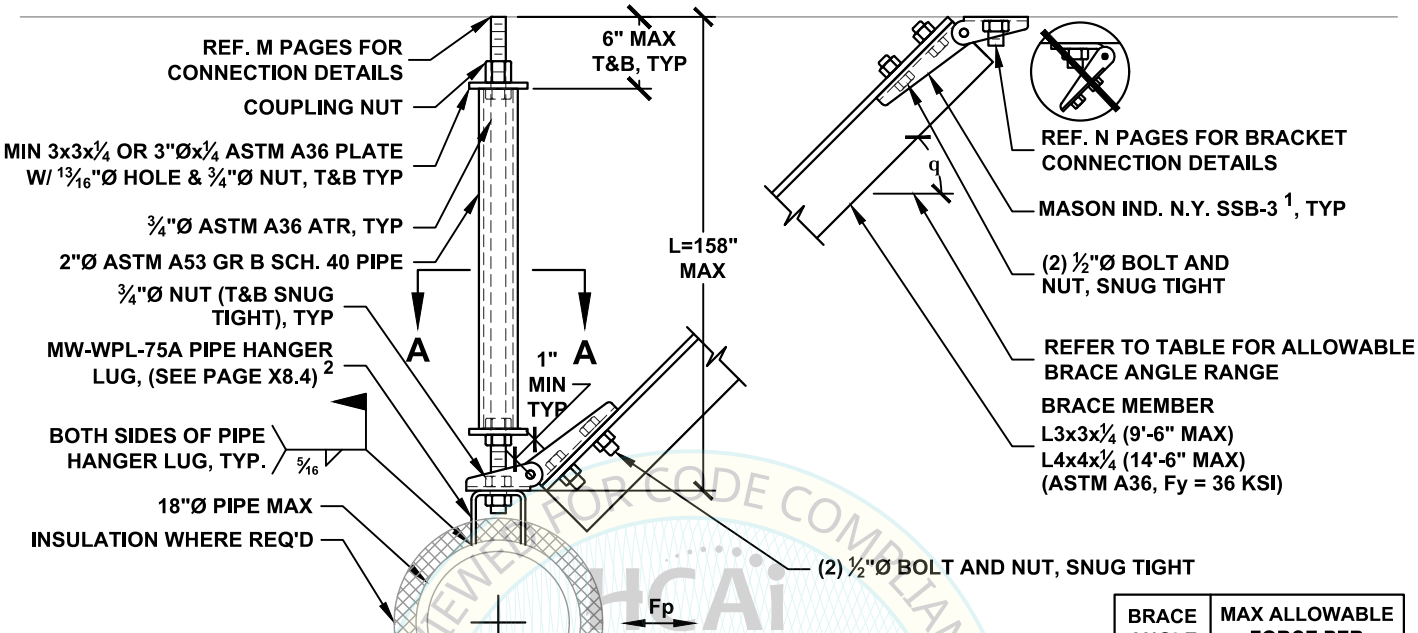

BRACE ANGLE RANGE q	MAX ALLOWABLE FORCE PER SEISMIC BRACE ASSEMBLY, Fp
30° - 45°	2750 LBS
46° - 60°	1740 LBS

REVIEWED FOR CODE COMPLIANCE
CALIFORNIA BUILDING CODE, 2022
HCAi
OPM-0043
BY: William Staehlin
DATE: 01/23/2023

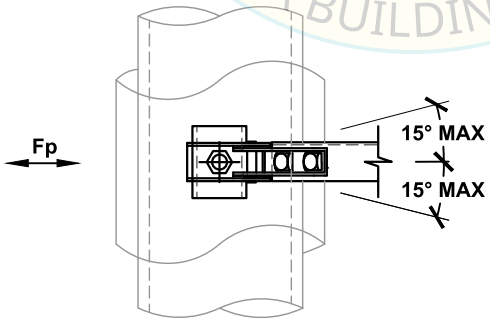

VIEW A-A

NOTES:

1. REF. SECTION A10 FOR GENERAL NOTES.
2. REF. SECTION A15 FOR ALTERNATE ARRANGEMENTS OF SEISMIC BRACES.

MASON WEST
1601 E. Miraloma Ave. Placentia, CA 92870
TEL (714) 630 - 0701, www.masonwest.com

Jiefu "Jeff" Zhang, SE
California SE No. S5270

PAGE
C1.46.1

HANGER ROD DIAMETER = ¾"	PIPING LONGITUDINAL SEISMIC SOLID BRACING SYSTEM 18"Ø PIPE MAX	KIT OPTIONS S3L

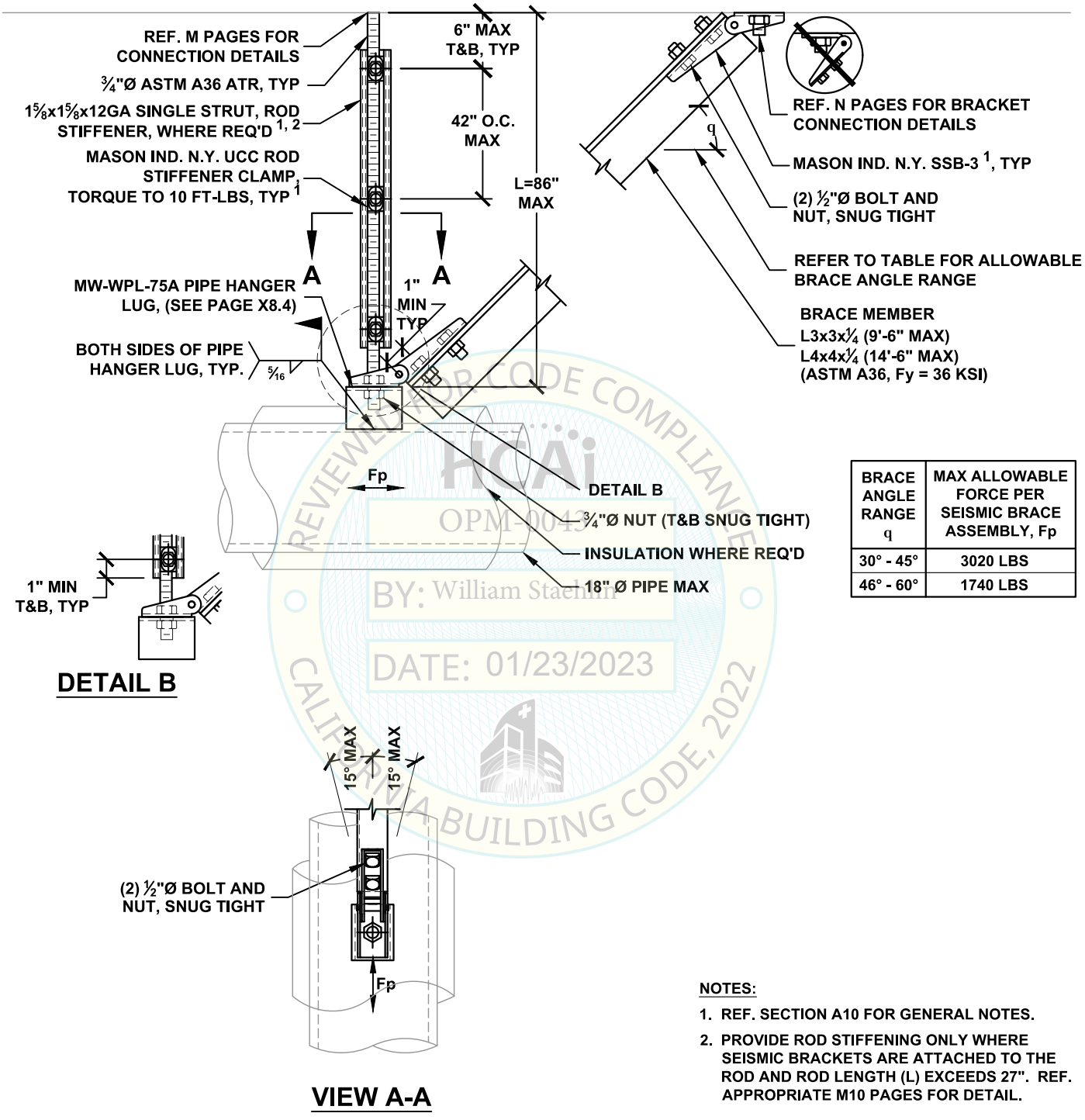

DETAIL B

VIEW A-A

BRACE ANGLE RANGE q	MAX ALLOWABLE FORCE PER SEISMIC BRACE ASSEMBLY, Fp
30° - 45°	3020 LBS
46° - 60°	1740 LBS

REVIEWED FOR CODE COMPLIANCE
HCAi
OPM-0043
BY: William Staehlin
DATE: 01/23/2023
CALIFORNIA BUILDING CODE, 2022

NOTES:

1. REF. SECTION A10 FOR GENERAL NOTES.
2. PROVIDE ROD STIFFENING ONLY WHERE SEISMIC BRACKETS ARE ATTACHED TO THE ROD AND ROD LENGTH (L) EXCEEDS 27". REF. APPROPRIATE M10 PAGES FOR DETAIL.

MASON WEST
1601 E. Miraloma Ave. Placentia, CA 92870
TEL (714) 630 - 0701, www.masonwest.com

Jiefu "Jeff" Zhang, SE
California SE No. S5270

PAGE
C1.47

HANGER ROD DIAMETER = ¾"	PIPING LONGITUDINAL SEISMIC SOLID BRACING SYSTEM 18"Ø PIPE MAX	KIT OPTIONS S3L

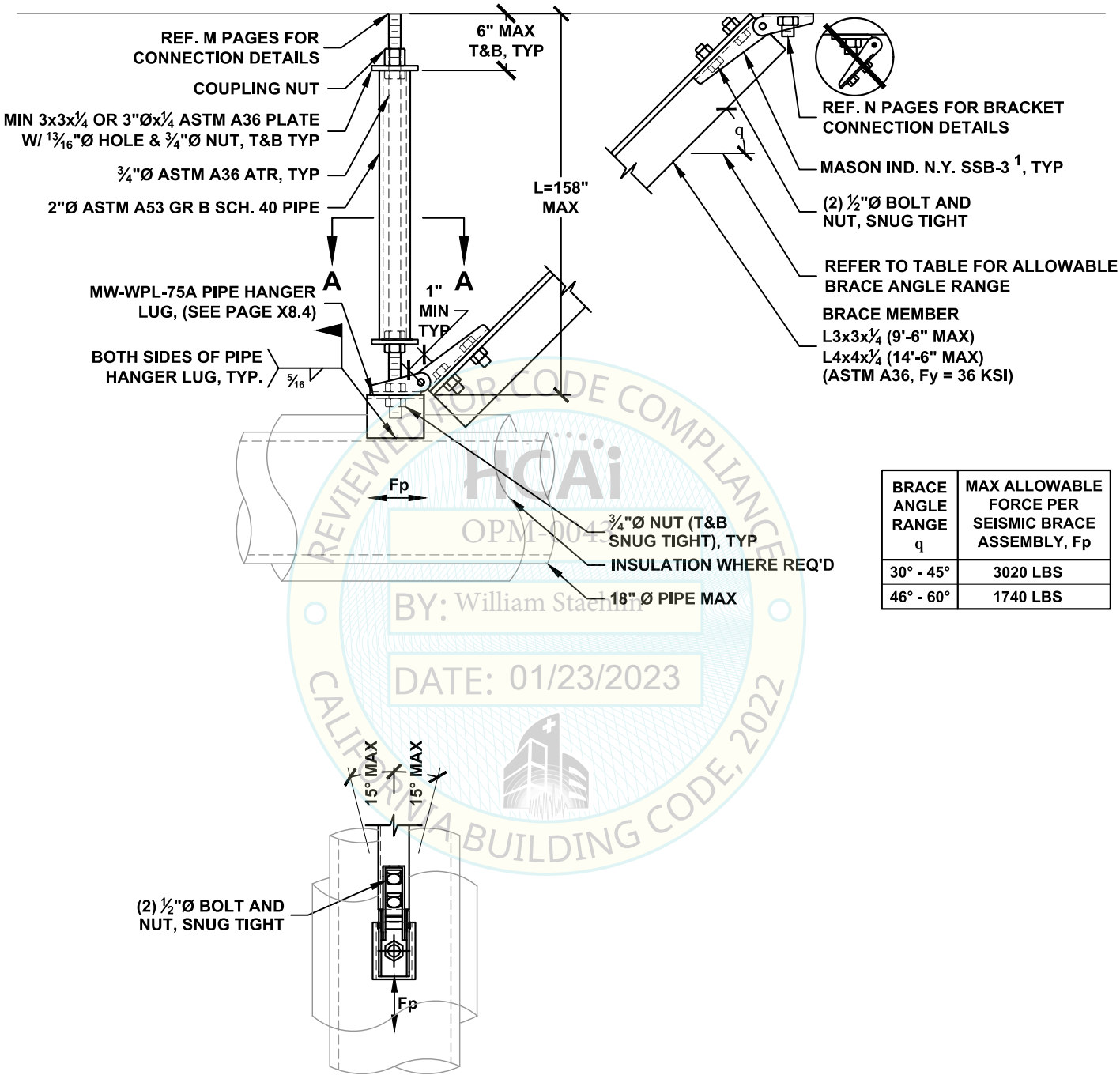

BRACE ANGLE RANGE q	MAX ALLOWABLE FORCE PER SEISMIC BRACE ASSEMBLY, Fp
30° - 45°	3020 LBS
46° - 60°	1740 LBS

VIEW A-A

NOTES:

1. REF. SECTION A10 FOR GENERAL NOTES.

HCAi
OPM-0043
REVIEWED FOR CODE COMPLIANCE
BY: William Staehlin
DATE: 01/23/2023
CALIFORNIA BUILDING CODE, 2022

MASON WEST
1601 E. Miraloma Ave. Placentia, CA 92870
TEL (714) 630 - 0701, www.masonwest.com

Jiefu "Jeff" Zhang, SE
California SE No. S5270

PAGE
C1.47.1

HANGER ROD DIAMETER = ¾"	PIPING ALL-DIRECTIONAL SEISMIC SOLID BRACING SYSTEM 18"Ø PIPE MAX	KIT OPTIONS S3A

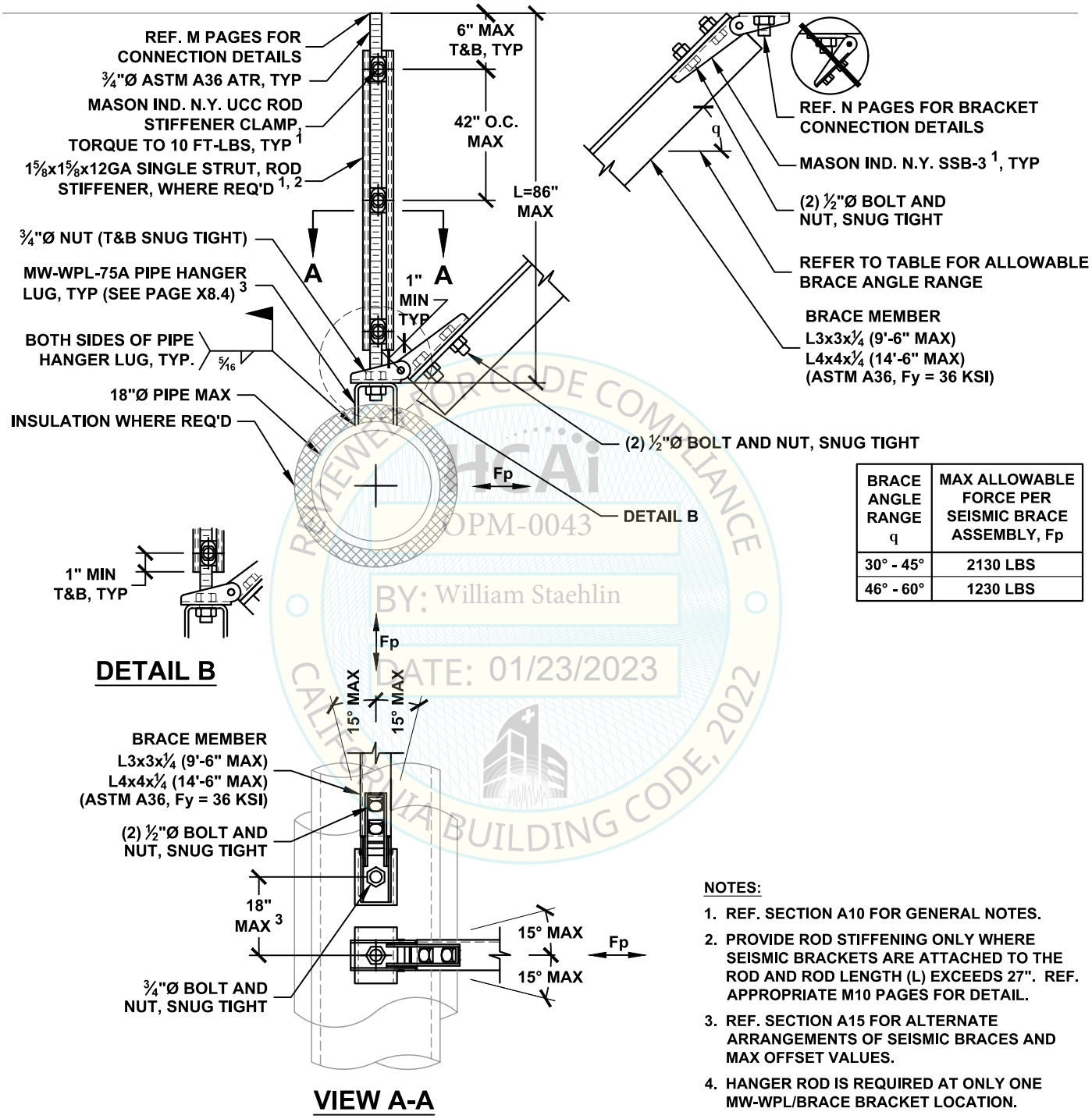

BRACE ANGLE RANGE q	MAX ALLOWABLE FORCE PER SEISMIC BRACE ASSEMBLY, Fp
30° - 45°	2130 LBS
46° - 60°	1230 LBS

NOTES:

1. REF. SECTION A10 FOR GENERAL NOTES.
2. PROVIDE ROD STIFFENING ONLY WHERE SEISMIC BRACKETS ARE ATTACHED TO THE ROD AND ROD LENGTH (L) EXCEEDS 27". REF. APPROPRIATE M10 PAGES FOR DETAIL.
3. REF. SECTION A15 FOR ALTERNATE ARRANGEMENTS OF SEISMIC BRACES AND MAX OFFSET VALUES.
4. HANGER ROD IS REQUIRED AT ONLY ONE MW-WPL/BRACE BRACKET LOCATION.

HCAi
REVIEWED FOR CODE COMPLIANCE
OPM-0043
BY: William Staehlin
DATE: 01/23/2023
CALIFORNIA BUILDING CODE, 2022

MASON WEST
1601 E. Miraloma Ave. Placentia, CA 92870
TEL (714) 630 - 0701, www.masonwest.com

Jiefu "Jeff" Zhang, SE
California SE No. S5270

PAGE
C1.48

HANGER ROD DIAMETER = ¾"	PIPING ALL-DIRECTIONAL SEISMIC SOLID BRACING SYSTEM 18"Ø PIPE MAX	KIT OPTIONS S3A

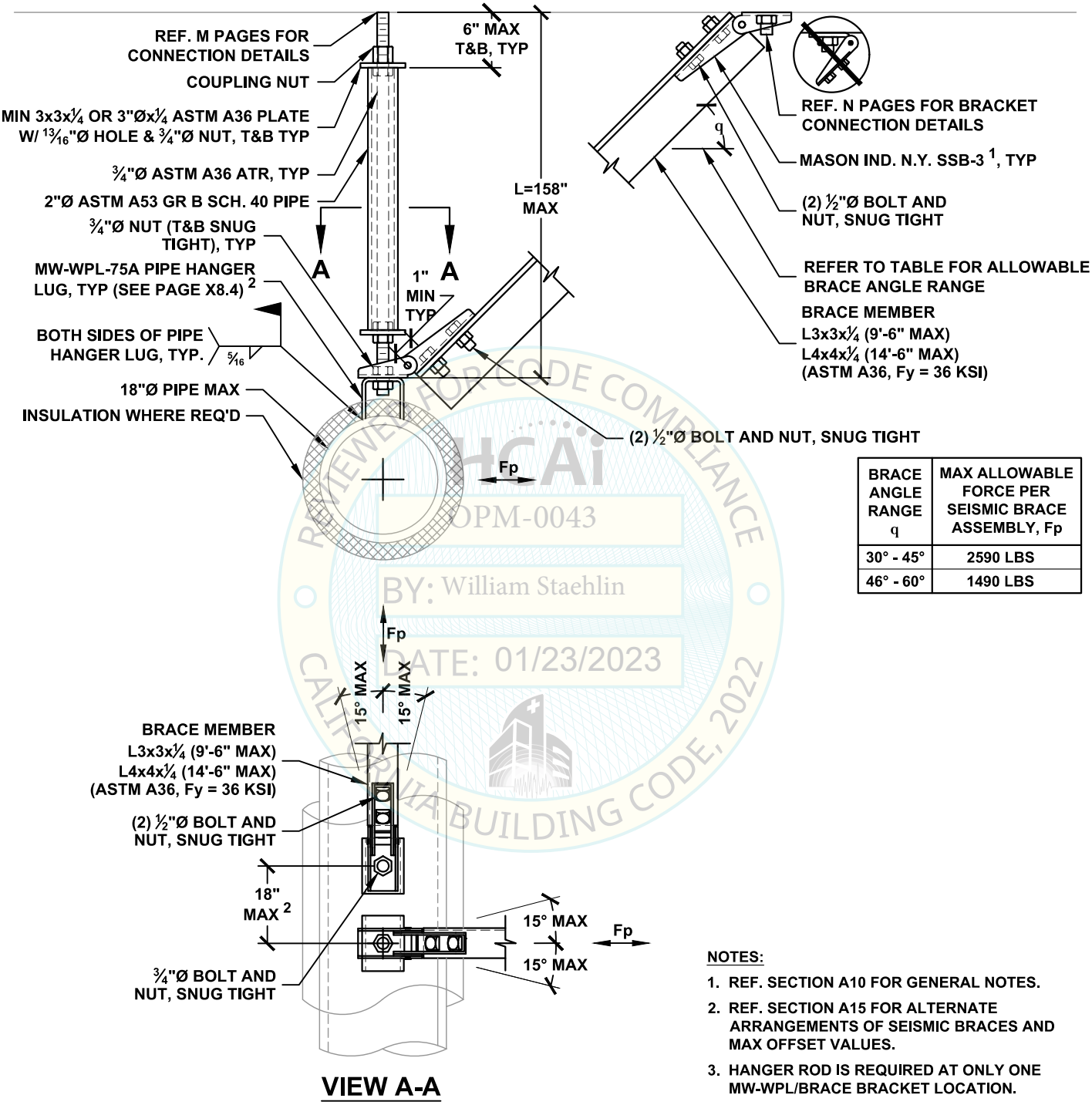

BRACE ANGLE RANGE q	MAX ALLOWABLE FORCE PER SEISMIC BRACE ASSEMBLY, Fp
30° - 45°	2590 LBS
46° - 60°	1490 LBS

VIEW A-A

NOTES:

1. REF. SECTION A10 FOR GENERAL NOTES.
2. REF. SECTION A15 FOR ALTERNATE ARRANGEMENTS OF SEISMIC BRACES AND MAX OFFSET VALUES.
3. HANGER ROD IS REQUIRED AT ONLY ONE MW-WPL/BRACE BRACKET LOCATION.

REVIEWED FOR CODE COMPLIANCE
HCAi
OPM-0043
BY: William Staehlin
DATE: 01/23/2023
CALIFORNIA BUILDING CODE, 2022

MASON WEST
1601 E. Miraloma Ave. Placentia, CA 92870
TEL (714) 630 - 0701, www.masonwest.com

Jiefu "Jeff" Zhang, SE
California SE No. S5270

PAGE
C1.48.1

HANGER ROD DIAMETER = 7/8"	PIPING TRANSVERSE SEISMIC SOLID BRACING SYSTEM 12"Ø PIPE MAX	KIT OPTIONS S2520T

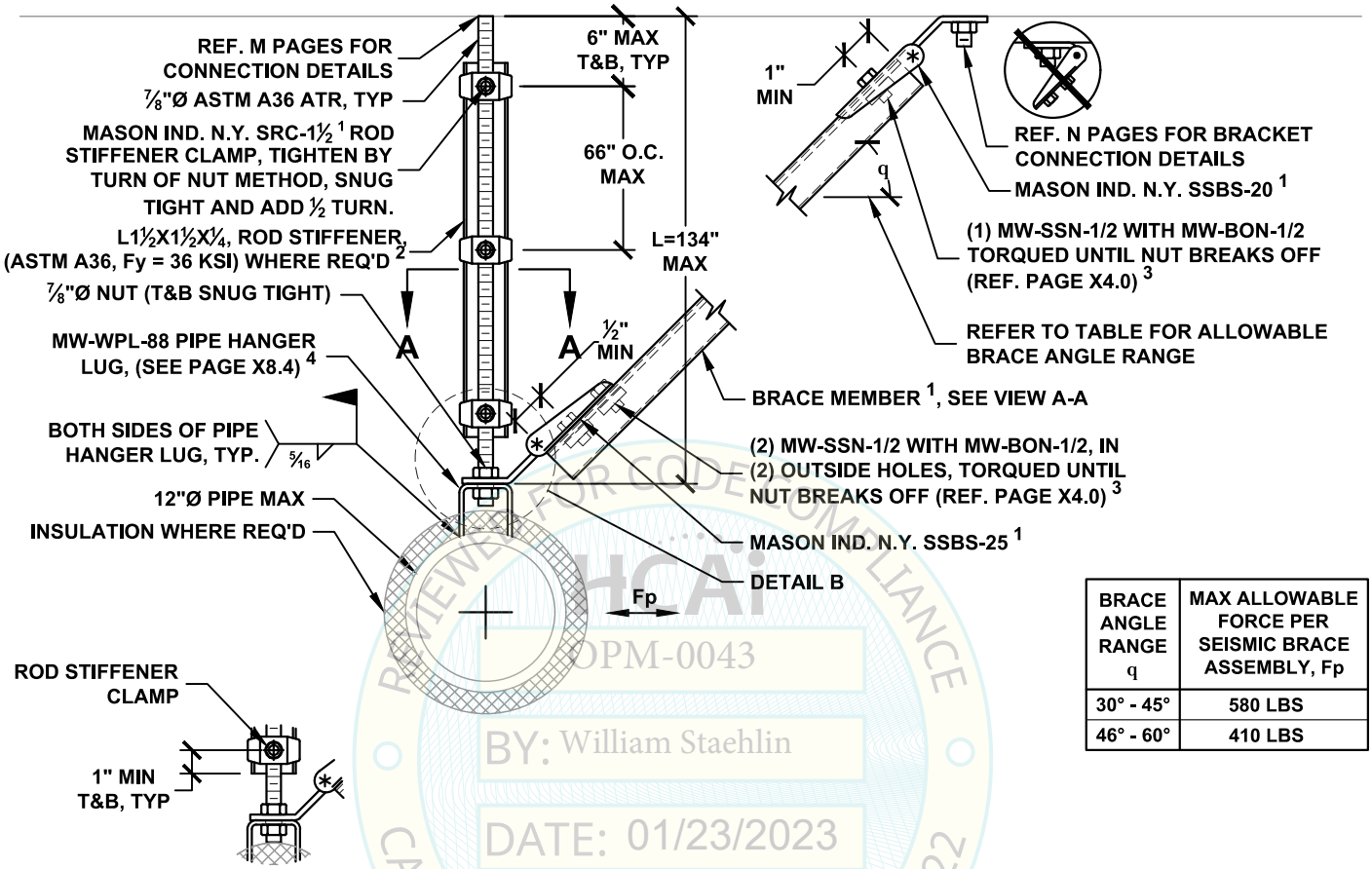

BRACE ANGLE RANGE q	MAX ALLOWABLE FORCE PER SEISMIC BRACE ASSEMBLY, Fp
30° - 45°	580 LBS
46° - 60°	410 LBS

DETAIL B

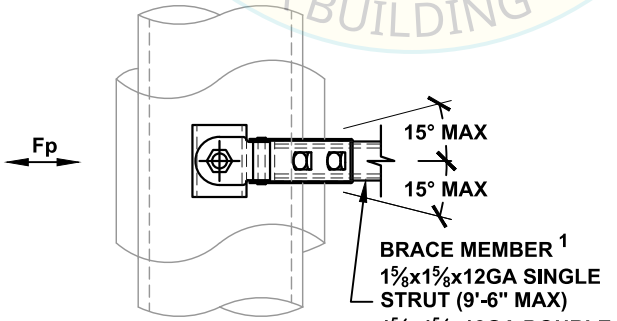

VIEW A-A

OPM-0043
BY: William Staehlin
DATE: 01/23/2023
REVIEWED FOR CODE COMPLIANCE
CALIFORNIA BUILDING CODE, 2022

NOTES:

1. REF. SECTION A10 FOR GENERAL NOTES.
2. PROVIDE ROD STIFFENING ONLY WHERE SEISMIC BRACKETS ARE ATTACHED TO THE ROD AND ROD LENGTH (L) EXCEEDS 43". REF. APPROPRIATE M10 PAGES FOR DETAIL.
3. PROVIDE (1) 1/2" DIA. CONNECTION IN CENTER HOLE WHEN STRUT BRACE IS INSTALLED INSIDE THE BRACKET AND (2) 1/2" DIA. CONNECTIONS IN (2) OUTER HOLES WHEN THE BRACE IS INSTALLED OUTSIDE OF THE BRACKET. REF. X2.3 FOR CONNECTION DETAILS.
4. REF. SECTION A15 FOR ALTERNATIVE ARRANGEMENT OF SEISMIC BRACES.

MASON WEST
1601 E. Miraloma Ave. Placentia, CA 92870
TEL (714) 630 - 0701, www.masonwest.com

Jiefu "Jeff" Zhang, SE
California SE No. S5270

PAGE
C1.50

HANGER ROD DIAMETER = 7/8"	PIPING LONGITUDINAL SEISMIC SOLID BRACING SYSTEM 12"Ø PIPE MAX	KIT OPTIONS S2520L

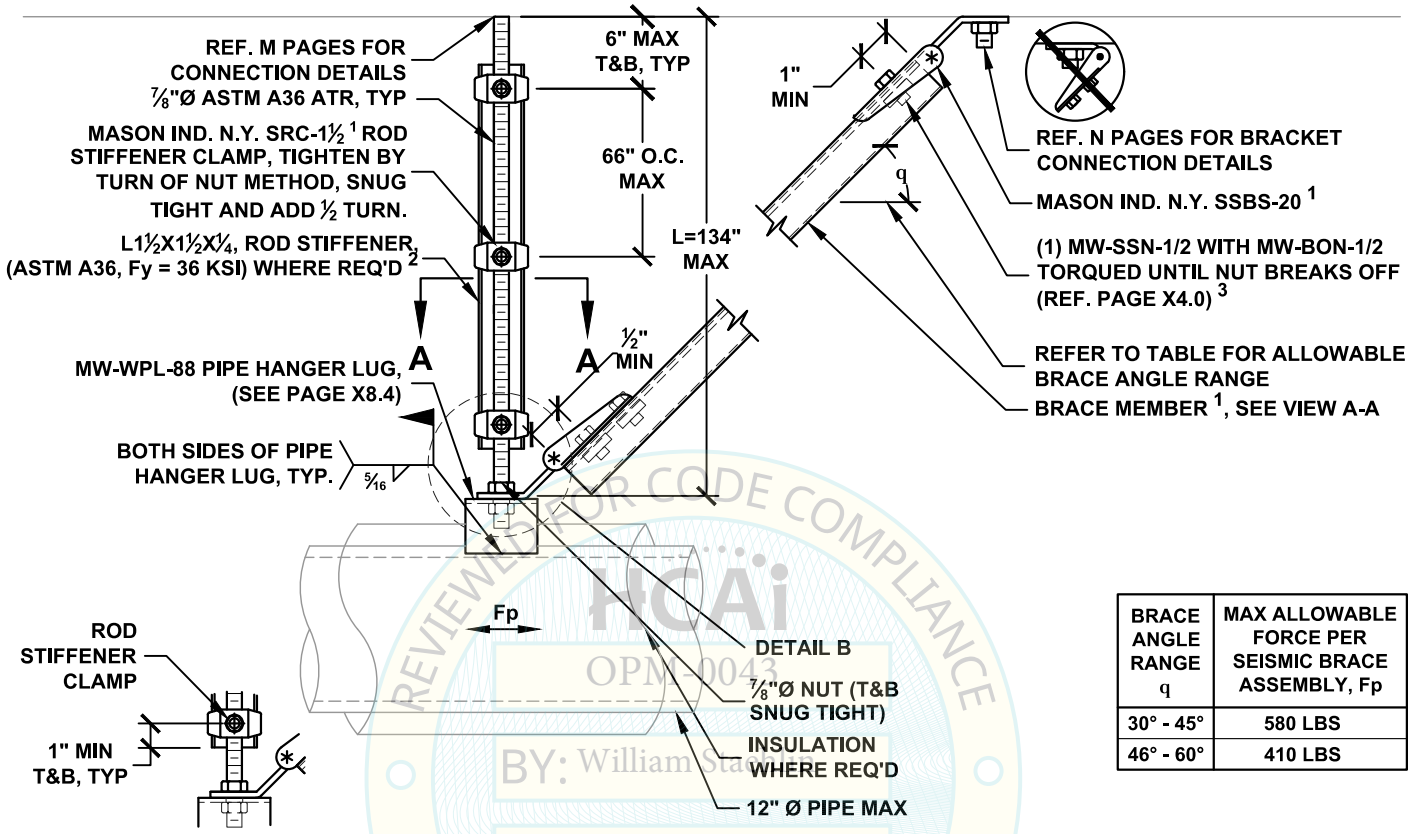

BRACE ANGLE RANGE q	MAX ALLOWABLE FORCE PER SEISMIC BRACE ASSEMBLY, Fp
30° - 45°	580 LBS
46° - 60°	410 LBS

DETAIL B

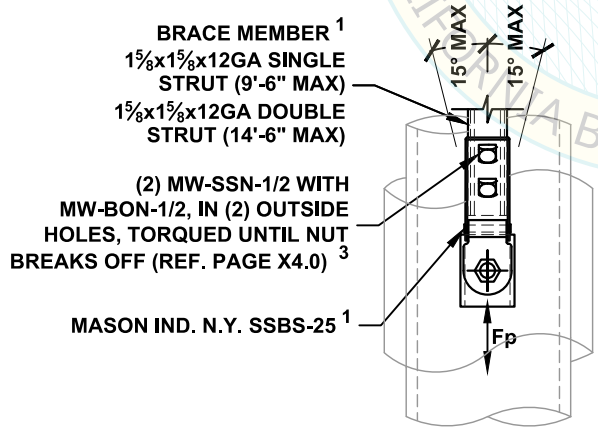

VIEW A-A

NOTES:

1. REF. SECTION A10 FOR GENERAL NOTES.
2. PROVIDE ROD STIFFENING ONLY WHERE SEISMIC BRACKETS ARE ATTACHED TO THE ROD AND ROD LENGTH (L) EXCEEDS 43". REF. APPROPRIATE M10 PAGES FOR DETAIL.
3. PROVIDE (1) 1/2" DIA. CONNECTION IN CENTER HOLE WHEN STRUT BRACE IS INSTALLED INSIDE THE BRACKET AND (2) 1/2" DIA. CONNECTIONS IN (2) OUTER HOLES WHEN THE BRACE IS INSTALLED OUTSIDE OF THE BRACKET. REF. X2.3 FOR CONNECTION DETAILS.

REVIEWED FOR CODE COMPLIANCE
HCAi
OPM-0043
BY: William Staehlin
DATE: 01/23/2023
CALIFORNIA BUILDING CODE, 2022

MASON WEST
1601 E. Miraloma Ave. Placentia, CA 92870
TEL (714) 630 - 0701, www.masonwest.com

Jiefu "Jeff" Zhang, SE
California SE No. S5270

PAGE
C1.51

HANGER ROD DIAMETER = 7/8"	PIPING ALL-DIRECTIONAL SEISMIC SOLID BRACING SYSTEM 12"Ø PIPE MAX	KIT OPTIONS S2520A

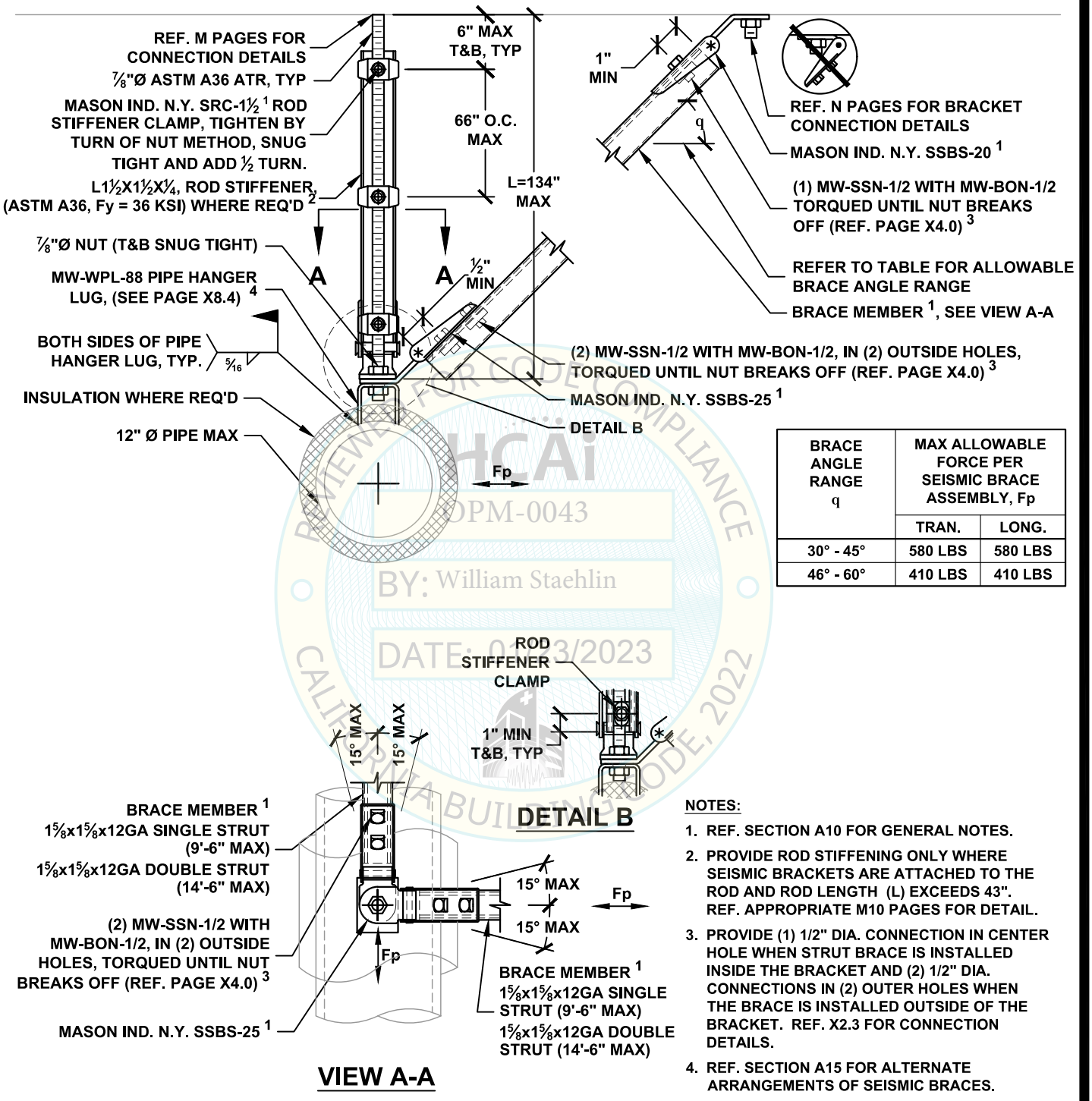

BRACE ANGLE RANGE q	MAX ALLOWABLE FORCE PER SEISMIC BRACE ASSEMBLY, Fp	
	TRAN.	LONG.
30° - 45°	580 LBS	580 LBS
46° - 60°	410 LBS	410 LBS

VIEW A-A

NOTES:

1. REF. SECTION A10 FOR GENERAL NOTES.
2. PROVIDE ROD STIFFENING ONLY WHERE SEISMIC BRACKETS ARE ATTACHED TO THE ROD AND ROD LENGTH (L) EXCEEDS 43". REF. APPROPRIATE M10 PAGES FOR DETAIL.
3. PROVIDE (1) 1/2" DIA. CONNECTION IN CENTER HOLE WHEN STRUT BRACE IS INSTALLED INSIDE THE BRACKET AND (2) 1/2" DIA. CONNECTIONS IN (2) OUTER HOLES WHEN THE BRACE IS INSTALLED OUTSIDE OF THE BRACKET. REF. X2.3 FOR CONNECTION DETAILS.
4. REF. SECTION A15 FOR ALTERNATE ARRANGEMENTS OF SEISMIC BRACES.

OPM-0043
BY: William Staehlin
DATE: 01/23/2023

MASON WEST
1601 E. Miraloma Ave. Placentia, CA 92870
TEL (714) 630 - 0701, www.masonwest.com

Jiefu "Jeff" Zhang, SE
California SE No. S5270

HANGER ROD DIAMETER = 1"	PIPING TRANSVERSE SEISMIC SOLID BRACING SYSTEM 18"Ø PIPE MAX	KIT OPTIONS S2520T

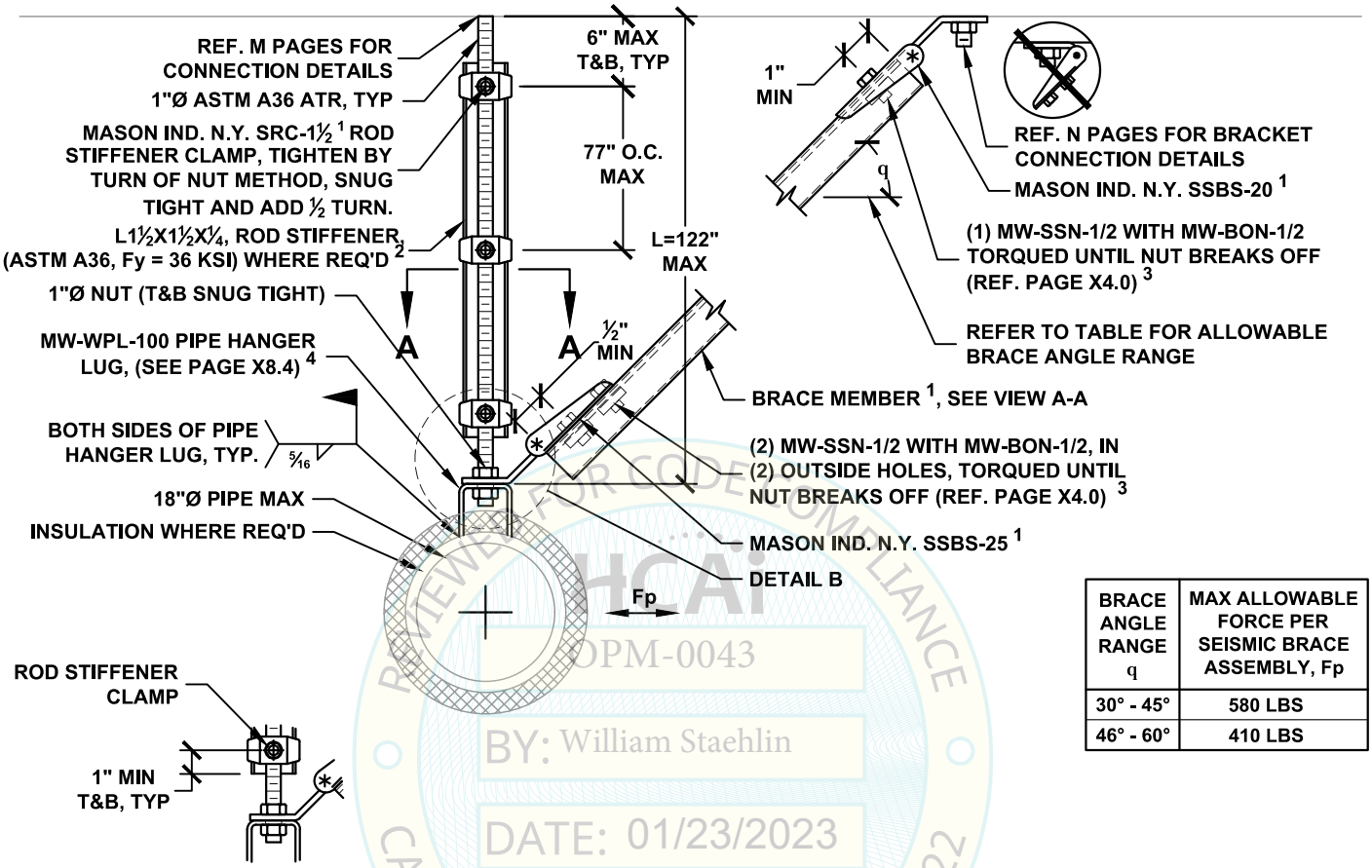

BRACE ANGLE RANGE q	MAX ALLOWABLE FORCE PER SEISMIC BRACE ASSEMBLY, Fp
30° - 45°	580 LBS
46° - 60°	410 LBS

DETAIL B

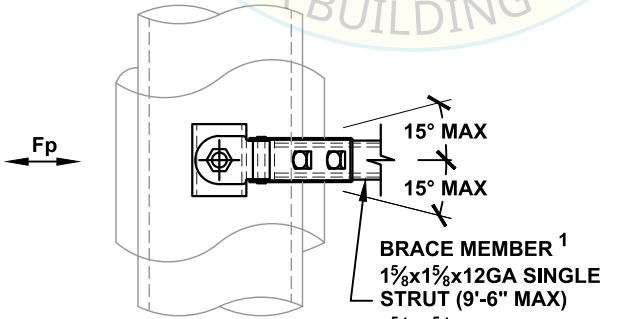

VIEW A-A

REVIEWED FOR CODE COMPLIANCE
OPM-0043
BY: William Staehlin
DATE: 01/23/2023
CALIFORNIA BUILDING CODE, 2022

NOTES:

1. REF. SECTION A10 FOR GENERAL NOTES.
2. PROVIDE ROD STIFFENING ONLY WHERE SEISMIC BRACKETS ARE ATTACHED TO THE ROD AND ROD LENGTH (L) EXCEEDS 50". REF. APPROPRIATE M10 PAGES FOR DETAIL.
3. PROVIDE (1) 1/2" DIA. CONNECTION IN CENTER HOLE WHEN STRUT BRACE IS INSTALLED INSIDE THE BRACKET AND (2) 1/2" DIA. CONNECTIONS IN (2) OUTER HOLES WHEN THE BRACE IS INSTALLED OUTSIDE OF THE BRACKET. REF. X2.3 FOR CONNECTION DETAILS.
4. REF. SECTION A15 FOR ALTERNATIVE ARRANGEMENT OF SEISMIC BRACES.

MASON WEST
1601 E. Miraloma Ave. Placentia, CA 92870
TEL (714) 630 - 0701, www.masonwest.com

Jiefu "Jeff" Zhang, SE
California SE No. S5270

PAGE
C1.60

HANGER ROD DIAMETER = 1"	PIPING LONGITUDINAL SEISMIC SOLID BRACING SYSTEM 18"Ø PIPE MAX	KIT OPTIONS S2520L

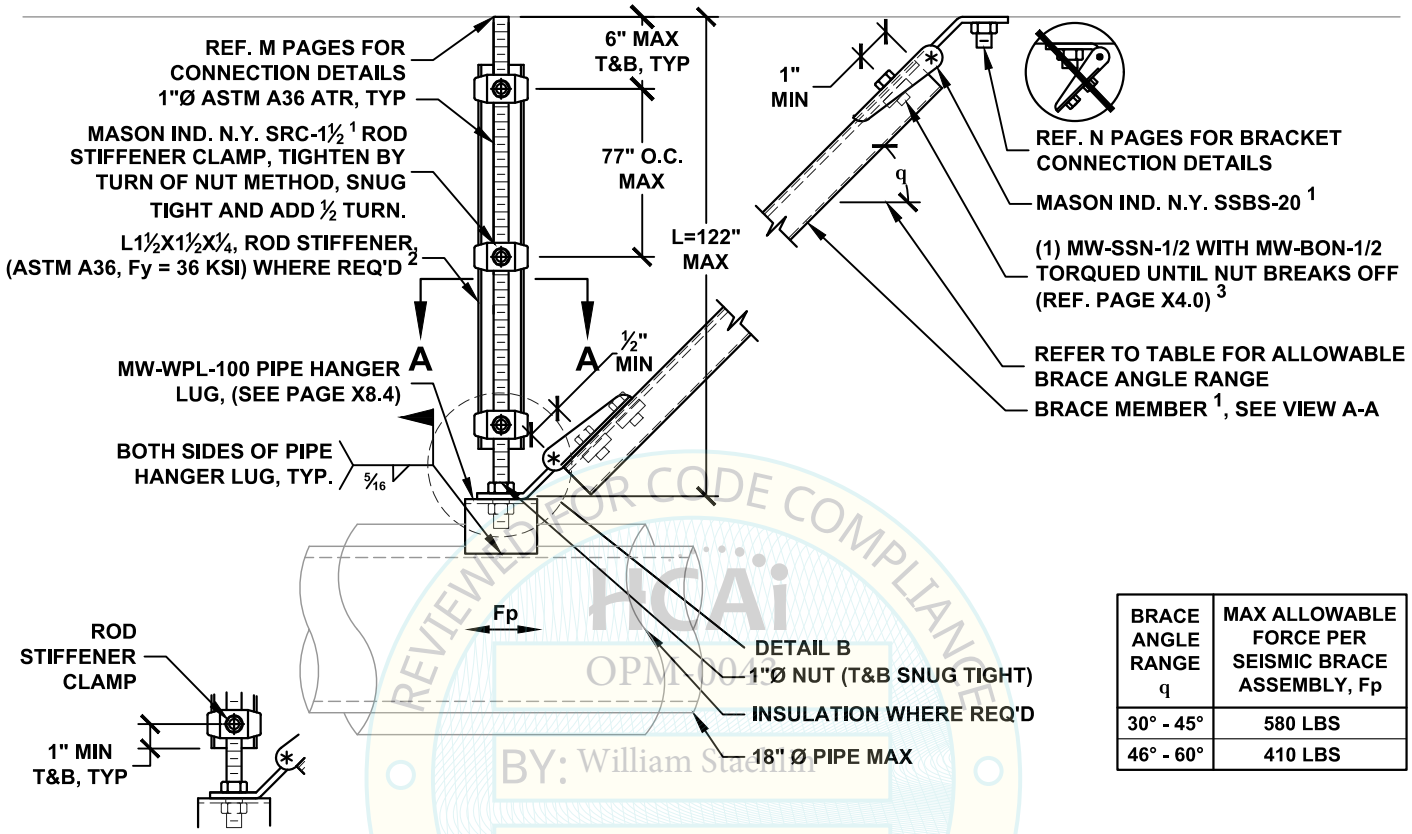

BRACE ANGLE RANGE q	MAX ALLOWABLE FORCE PER SEISMIC BRACE ASSEMBLY, Fp
30° - 45°	580 LBS
46° - 60°	410 LBS

DETAIL B

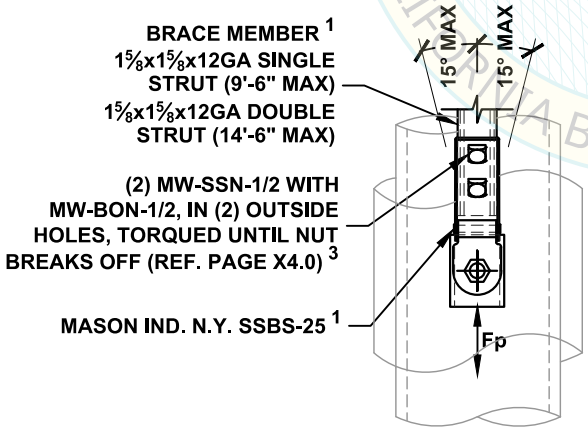

VIEW A-A

NOTES:

1. REF. SECTION A10 FOR GENERAL NOTES.
2. PROVIDE ROD STIFFENING ONLY WHERE SEISMIC BRACKETS ARE ATTACHED TO THE ROD AND ROD LENGTH (L) EXCEEDS 50". REF. APPROPRIATE M10 PAGES FOR DETAIL.
3. PROVIDE (1) 1/2" DIA. CONNECTION IN CENTER HOLE WHEN STRUT BRACE IS INSTALLED INSIDE THE BRACKET AND (2) 1/2" DIA. CONNECTIONS IN (2) OUTER HOLES WHEN THE BRACE IS INSTALLED OUTSIDE OF THE BRACKET. REF. X2.3 FOR CONNECTION DETAILS.

REVIEWED FOR CODE COMPLIANCE
HCAi
OPM-0043
BY: William Staehlin
DATE: 01/23/2023
CALIFORNIA BUILDING CODE, 2022

MASON WEST
1601 E. Miraloma Ave. Placentia, CA 92870
TEL (714) 630 - 0701, www.masonwest.com

Jiefu "Jeff" Zhang, SE
California SE No. S5270

PAGE
C1.61

HANGER ROD DIAMETER = 1"	PIPING ALL-DIRECTIONAL SEISMIC SOLID BRACING SYSTEM 18"Ø PIPE MAX	KIT OPTIONS S2520A

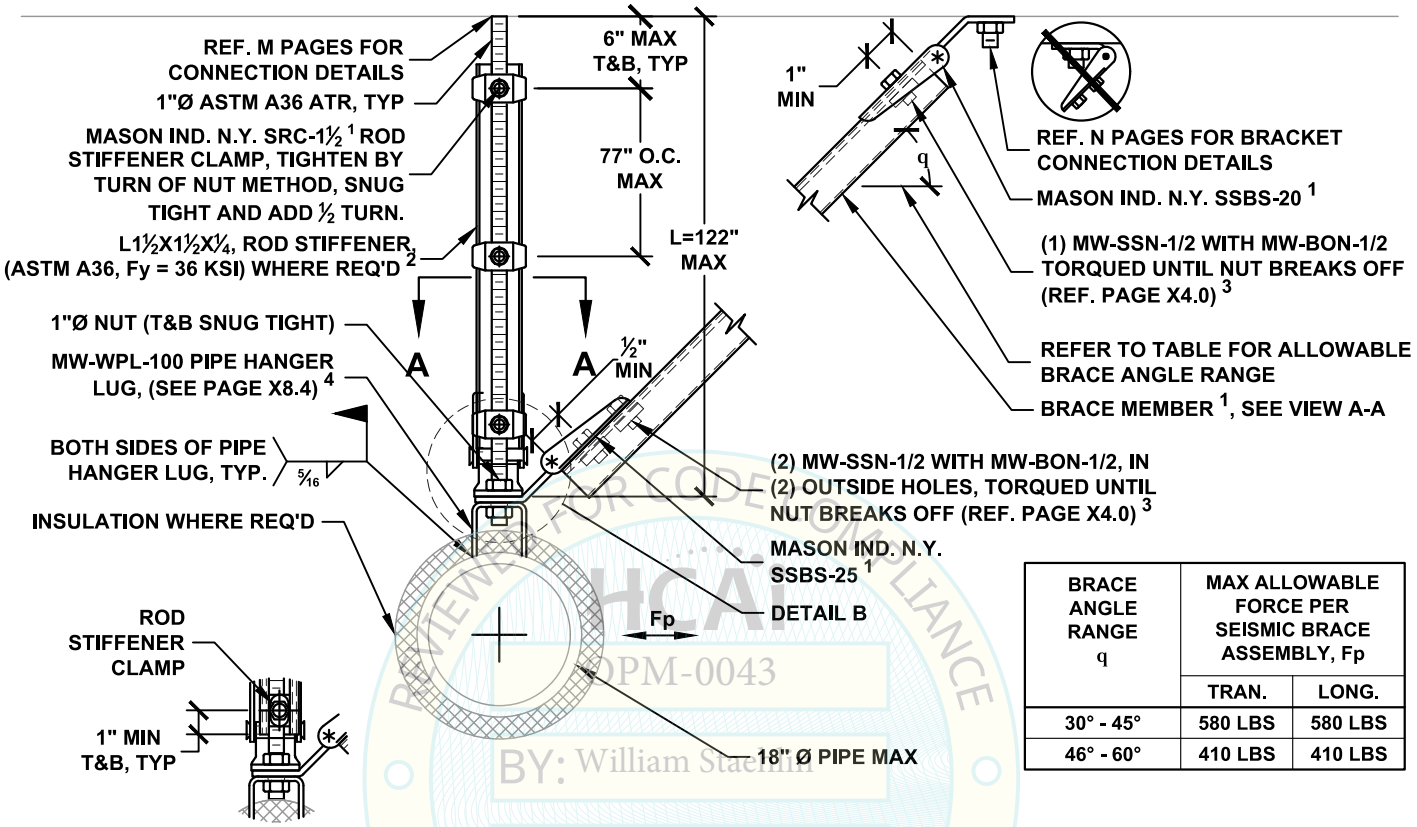

DETAIL B

BRACE ANGLE RANGE q	MAX ALLOWABLE FORCE PER SEISMIC BRACE ASSEMBLY, Fp	
	TRAN.	LONG.
30° - 45°	580 LBS	580 LBS
46° - 60°	410 LBS	410 LBS

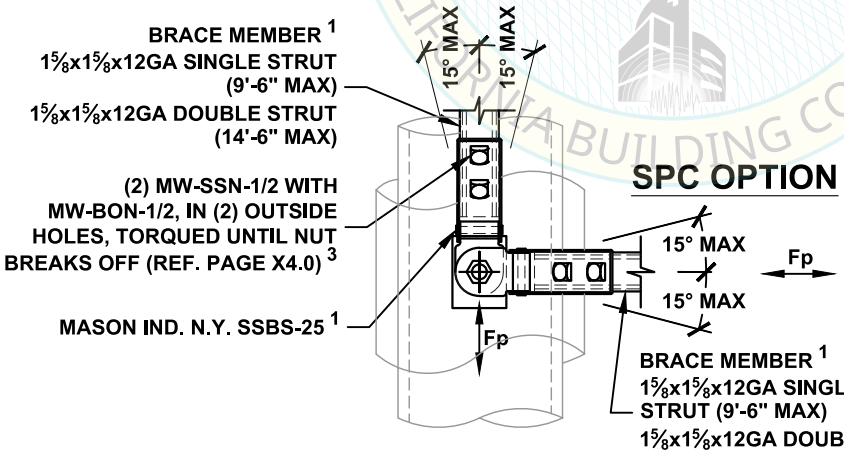

VIEW A-A

NOTES:

1. REF. SECTION A10 FOR GENERAL NOTES.
2. PROVIDE ROD STIFFENING ONLY WHERE SEISMIC BRACKETS ARE ATTACHED TO THE ROD AND ROD LENGTH (L) EXCEEDS 50". REF. APPROPRIATE M10 PAGES FOR DETAIL.
3. PROVIDE (1) 1/2" DIA. CONNECTION IN CENTER HOLE WHEN STRUT BRACE IS INSTALLED INSIDE THE BRACKET AND (2) 1/2" DIA. CONNECTIONS IN (2) OUTER HOLES WHEN THE BRACE IS INSTALLED OUTSIDE OF THE BRACKET. REF. X2.3 FOR CONNECTION DETAILS.
4. REF. SECTION A15 FOR ALTERNATE ARRANGEMENTS OF SEISMIC BRACES.

REVIEWED FOR CODE COMPLIANCE
OPM-0043
BY: William Staehlin
DATE: 01/23/2023
CALIFORNIA BUILDING CODE, 2022

MASON WEST
1601 E. Miraloma Ave. Placentia, CA 92870
TEL (714) 630 - 0701, www.masonwest.com

Jiefu "Jeff" Zhang, SE
California SE No. S5270

HANGER ROD DIAMETER = 1"	PIPING TRANSVERSE SEISMIC SOLID BRACING SYSTEM 18"Ø PIPE MAX	KIT OPTIONS S4T

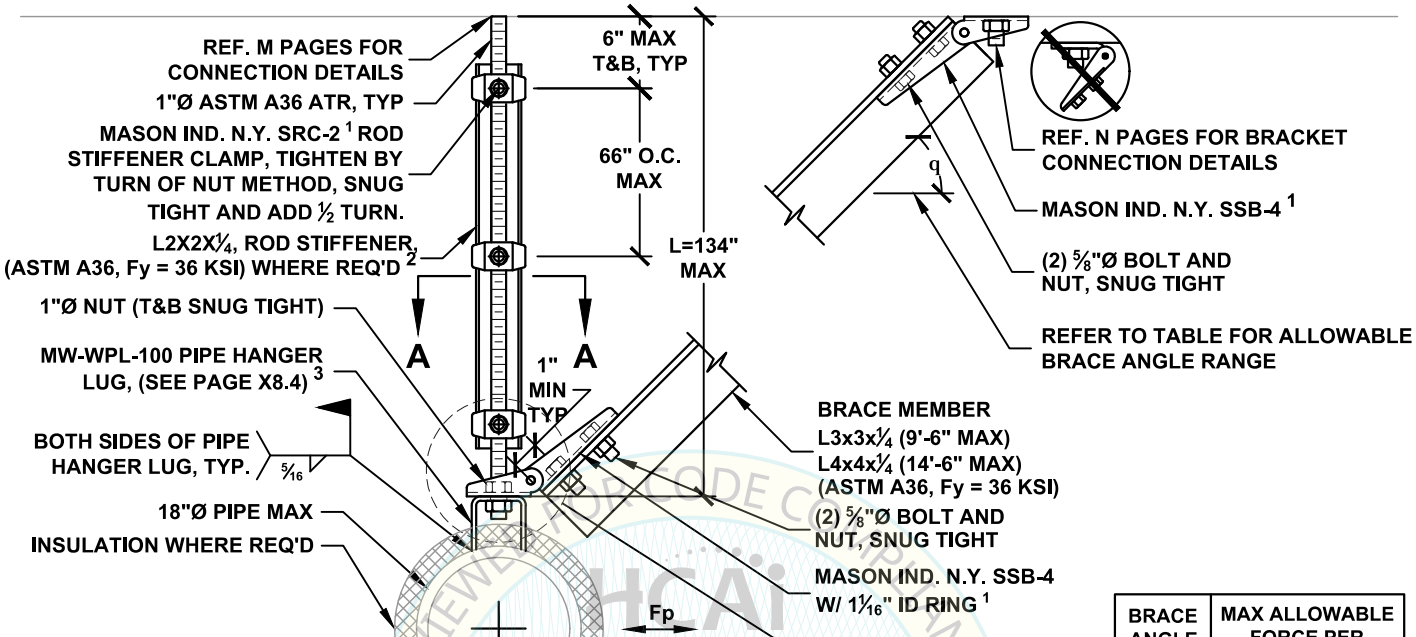

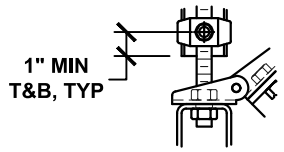

DETAIL B

BRACE ANGLE RANGE q	MAX ALLOWABLE FORCE PER SEISMIC BRACE ASSEMBLY, Fp
30° - 45°	3000 LBS
46° - 60°	2220 LBS

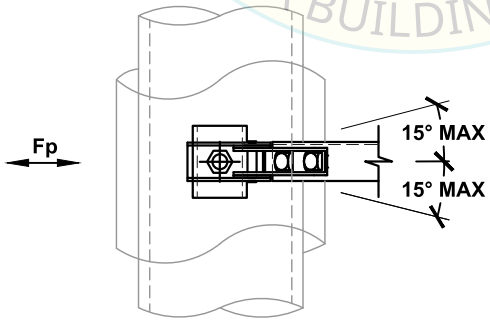

VIEW A-A

NOTES:

1. REF. SECTION A10 FOR GENERAL NOTES.
2. PROVIDE ROD STIFFENING ONLY WHERE SEISMIC BRACKETS ARE ATTACHED TO THE ROD AND ROD LENGTH (L) EXCEEDS 43". REF. APPROPRIATE M10 PAGES FOR DETAIL.
3. REF. SECTION A15 FOR ALTERNATE ARRANGEMENT OF SEISMIC BRACES.

REVIEWED FOR CODE COMPLIANCE
OPM-0043
BY: William Staehlin
DATE: 01/23/2023
CALIFORNIA BUILDING CODE, 2022

MASON WEST
1601 E. Miraloma Ave. Placentia, CA 92870
TEL (714) 630 - 0701, www.masonwest.com

Jiefu "Jeff" Zhang, SE
California SE No. S5270

PAGE
C1.63

HANGER ROD DIAMETER = 1"	PIPING LONGITUDINAL SEISMIC SOLID BRACING SYSTEM 18"Ø PIPE MAX	KIT OPTIONS S4L

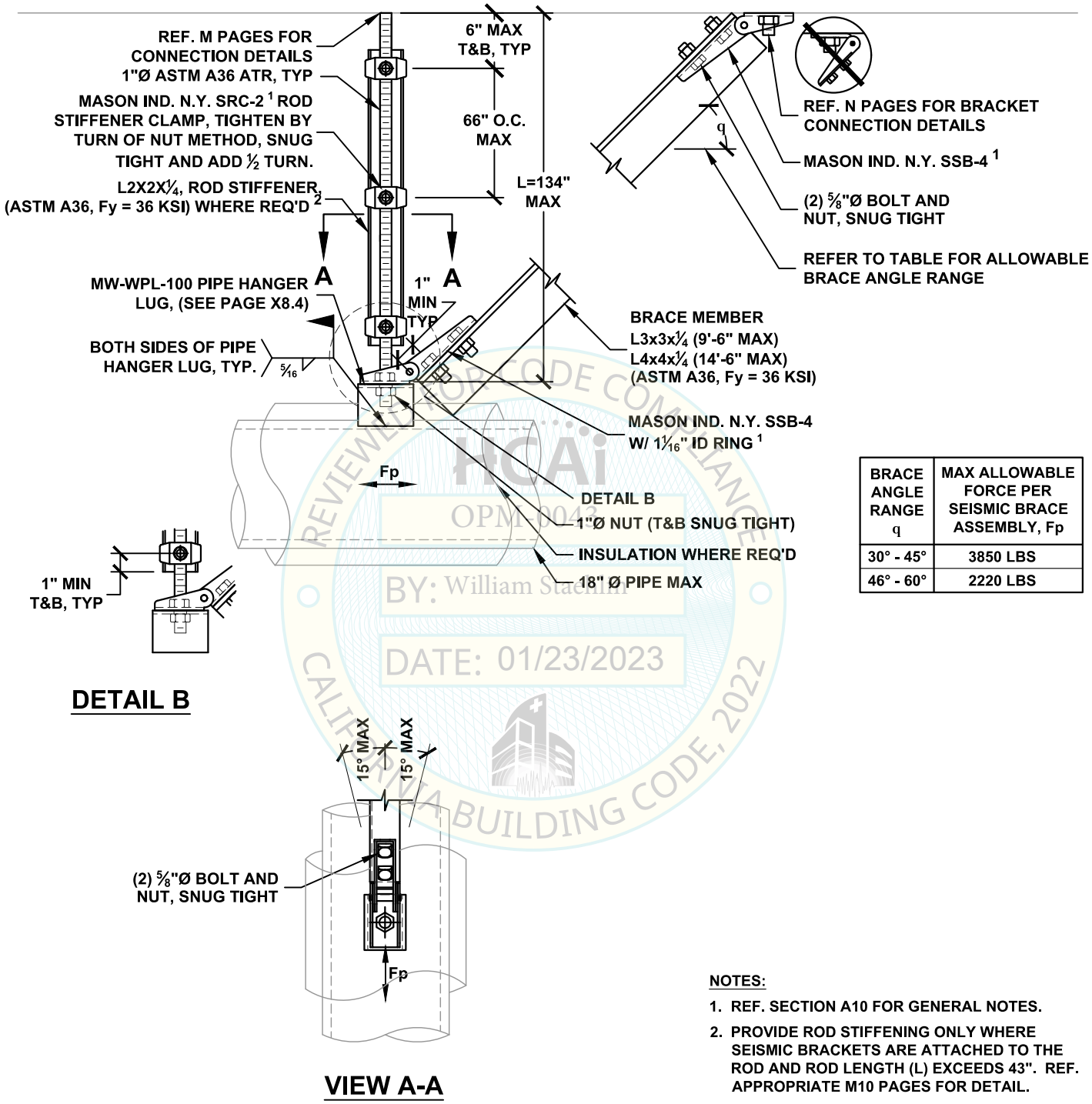

BRACE ANGLE RANGE q	MAX ALLOWABLE FORCE PER SEISMIC BRACE ASSEMBLY, Fp
30° - 45°	3850 LBS
46° - 60°	2220 LBS

DETAIL B

VIEW A-A

ICC-ES REVIEWED FOR CODE COMPLIANCE
OPM-0043
BY: William Staehlin
DATE: 01/23/2023
CALIFORNIA BUILDING CODE, 2022

NOTES:

1. REF. SECTION A10 FOR GENERAL NOTES.
2. PROVIDE ROD STIFFENING ONLY WHERE SEISMIC BRACKETS ARE ATTACHED TO THE ROD AND ROD LENGTH (L) EXCEEDS 43". REF. APPROPRIATE M10 PAGES FOR DETAIL.

MASON WEST
1601 E. Miraloma Ave. Placentia, CA 92870
TEL (714) 630 - 0701, www.masonwest.com

Jiefu "Jeff" Zhang, SE
California SE No. S5270

PAGE
C1.64

HANGER ROD DIAMETER = 1"	PIPING ALL-DIRECTIONAL SEISMIC SOLID BRACING SYSTEM 18"Ø PIPE MAX	KIT OPTIONS S4A

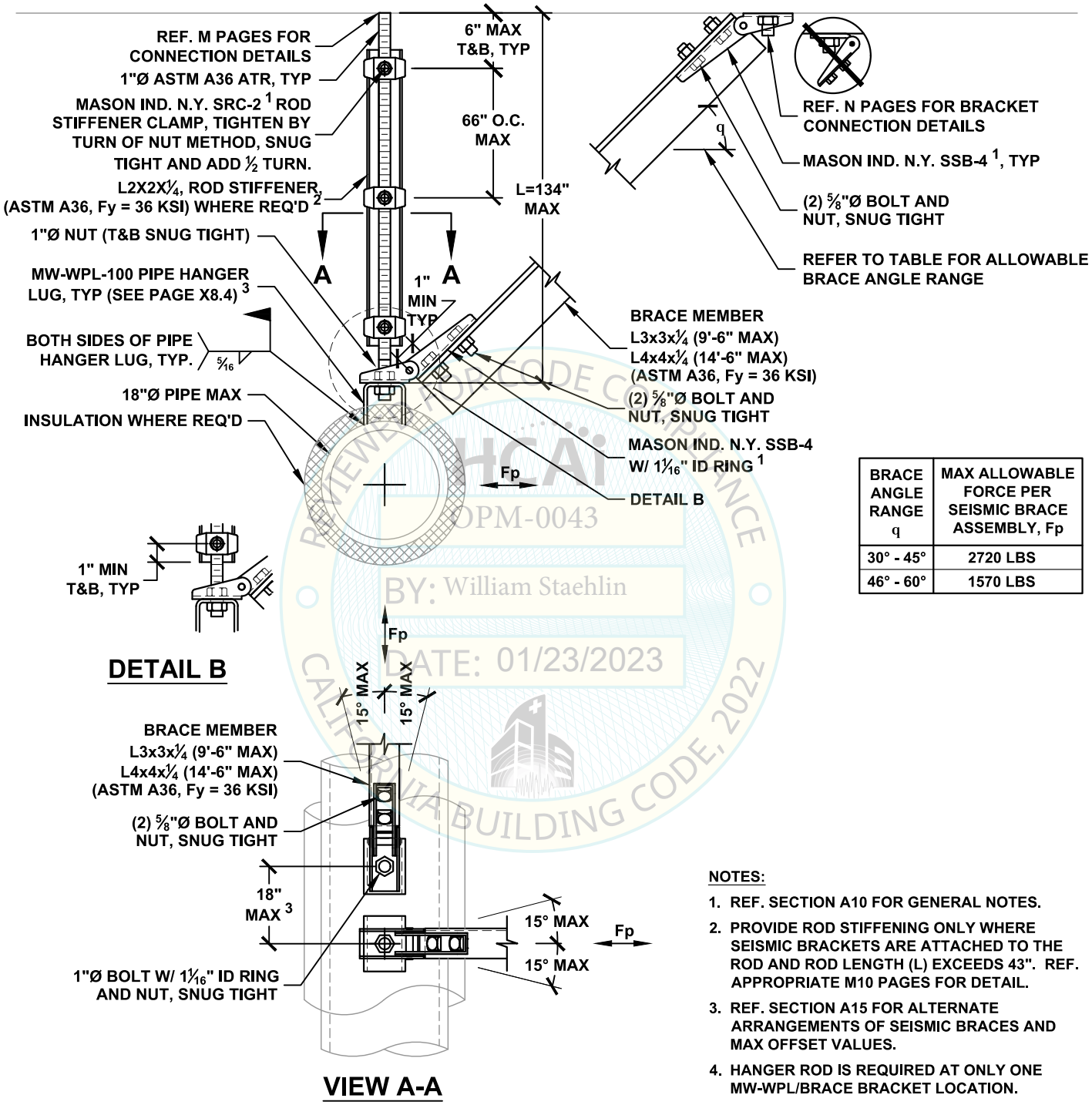

BRACE ANGLE RANGE q	MAX ALLOWABLE FORCE PER SEISMIC BRACE ASSEMBLY, Fp
30° - 45°	2720 LBS
46° - 60°	1570 LBS

REVIEWED FOR CODE COMPLIANCE
OSHPD
OPM-0043
BY: William Staehlin
DATE: 01/23/2023
CALIFORNIA BUILDING CODE, 2022

NOTES:

1. REF. SECTION A10 FOR GENERAL NOTES.
2. PROVIDE ROD STIFFENING ONLY WHERE SEISMIC BRACKETS ARE ATTACHED TO THE ROD AND ROD LENGTH (L) EXCEEDS 43". REF. APPROPRIATE M10 PAGES FOR DETAIL.
3. REF. SECTION A15 FOR ALTERNATE ARRANGEMENTS OF SEISMIC BRACES AND MAX OFFSET VALUES.
4. HANGER ROD IS REQUIRED AT ONLY ONE MW-WPL/BRACE BRACKET LOCATION.

MASON WEST
1601 E. Miraloma Ave. Placentia, CA 92870
TEL (714) 630 - 0701, www.masonwest.com

Jiefu "Jeff" Zhang, SE
California SE No. S5270

PAGE
C1.65

HANGER ROD DIAMETER = 1¼"	PIPING TRANSVERSE SEISMIC SOLID BRACING SYSTEM 24"Ø PIPE MAX	KIT OPTIONS S4T

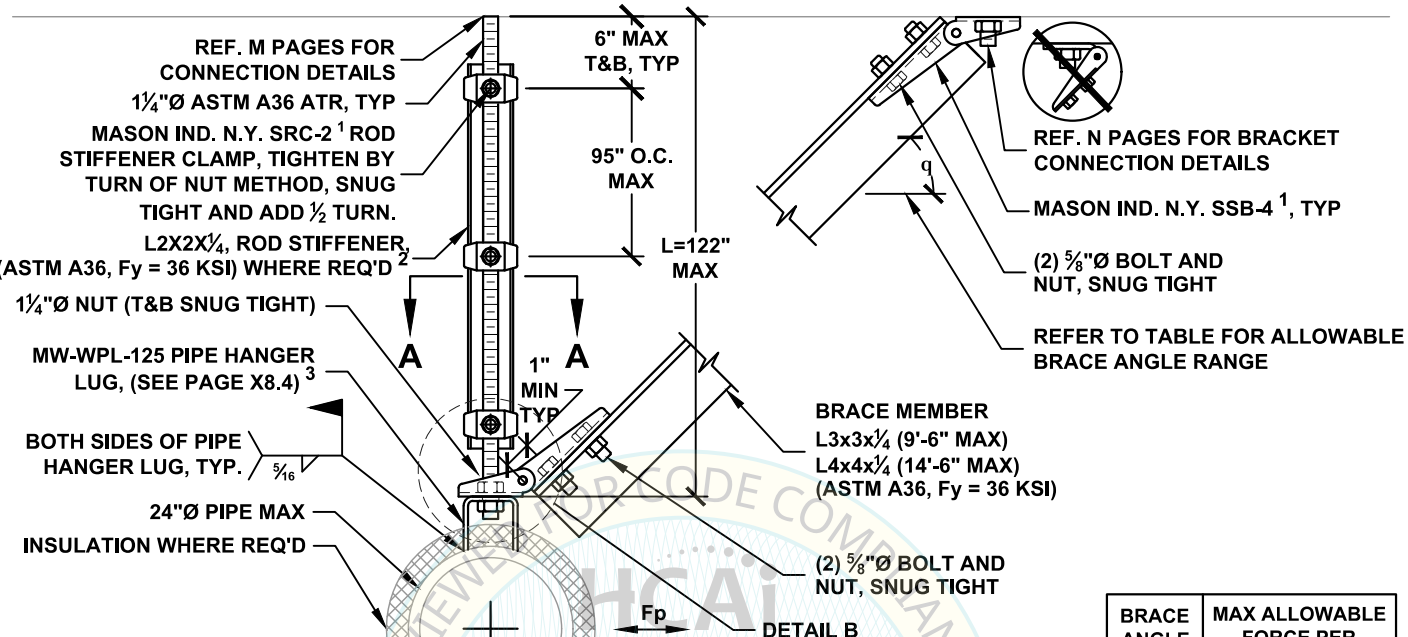

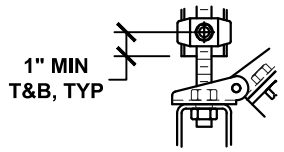

DETAIL B

BRACE ANGLE RANGE q	MAX ALLOWABLE FORCE PER SEISMIC BRACE ASSEMBLY, Fp
30° - 45°	4230 LBS
46° - 60°	2600 LBS

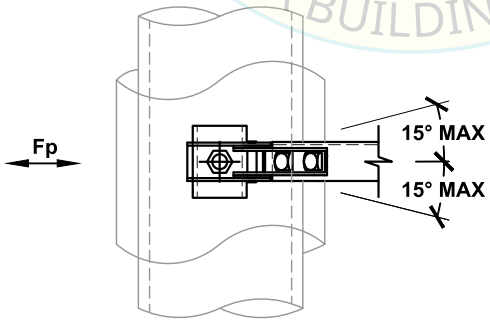

VIEW A-A

REVIEWED FOR CODE COMPLIANCE
HCAi
OPM-0043
BY: William Staehlin
DATE: 01/23/2023
CALIFORNIA BUILDING CODE, 2022

NOTES:

1. REF. SECTION A10 FOR GENERAL NOTES.
2. PROVIDE ROD STIFFENING ONLY WHERE SEISMIC BRACKETS ARE ATTACHED TO THE ROD AND ROD LENGTH (L) EXCEEDS 62". REF. APPROPRIATE M10 PAGES FOR DETAIL.
3. REF. SECTION A15 FOR ALTERNATE ARRANGEMENTS OF SEISMIC BRACES.

MASON WEST
1601 E. Miraloma Ave. Placentia, CA 92870
TEL (714) 630 - 0701, www.masonwest.com

Jiefu "Jeff" Zhang, SE
California SE No. S5270

HANGER ROD DIAMETER = 1¼"	PIPING LONGITUDINAL SEISMIC SOLID BRACING SYSTEM 24"Ø PIPE MAX	KIT OPTIONS S4L

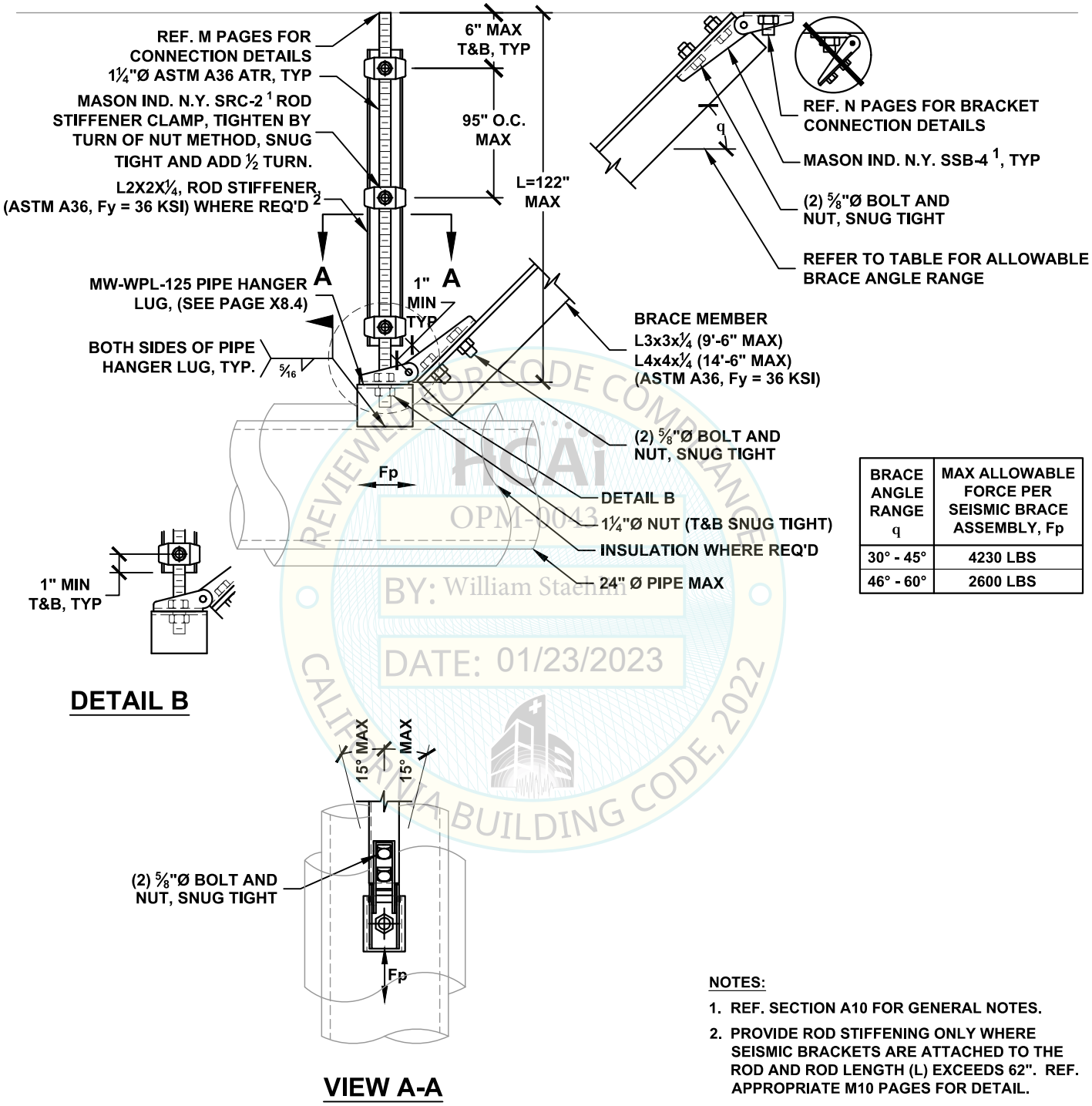

BRACE ANGLE RANGE q	MAX ALLOWABLE FORCE PER SEISMIC BRACE ASSEMBLY, Fp
30° - 45°	4230 LBS
46° - 60°	2600 LBS

DETAIL B

VIEW A-A

HCAi
OPM-0043
REVIEWED FOR CODE COMPLIANCE
BY: William Staehlin
DATE: 01/23/2023
CALIFORNIA BUILDING CODE, 2022

NOTES:

1. REF. SECTION A10 FOR GENERAL NOTES.
2. PROVIDE ROD STIFFENING ONLY WHERE SEISMIC BRACKETS ARE ATTACHED TO THE ROD AND ROD LENGTH (L) EXCEEDS 62". REF. APPROPRIATE M10 PAGES FOR DETAIL.

MASON WEST
1601 E. Miraloma Ave. Placentia, CA 92870
TEL (714) 630 - 0701, www.masonwest.com

Jiefu "Jeff" Zhang, SE
California SE No. S5270

PAGE
C1.71

HANGER ROD DIAMETER = 1¼"	PIPING ALL-DIRECTIONAL SEISMIC SOLID BRACING SYSTEM 24"Ø PIPE MAX	KIT OPTIONS S4A

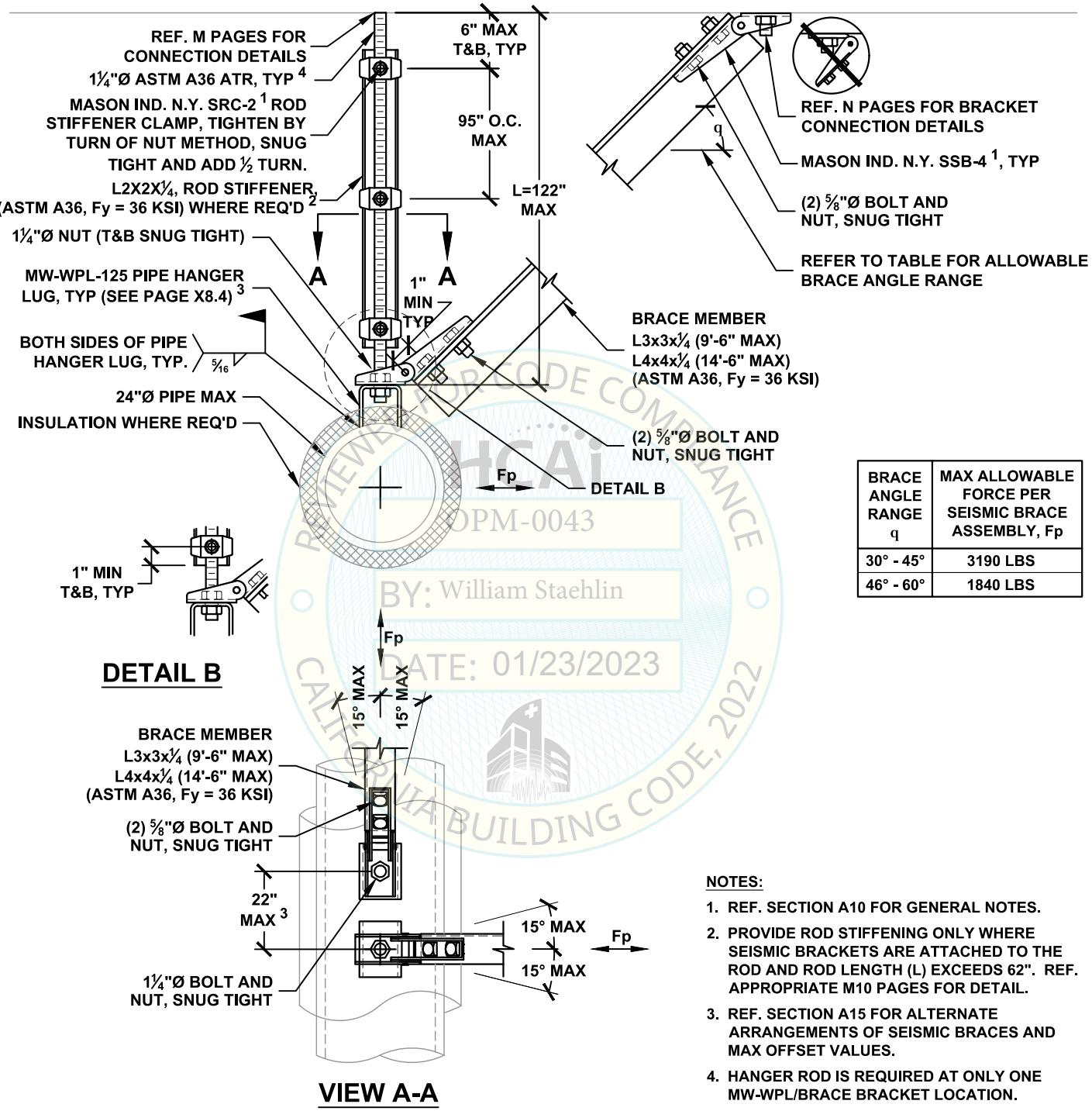

BRACE ANGLE RANGE q	MAX ALLOWABLE FORCE PER SEISMIC BRACE ASSEMBLY, Fp
30° - 45°	3190 LBS
46° - 60°	1840 LBS

NOTES:

1. REF. SECTION A10 FOR GENERAL NOTES.
2. PROVIDE ROD STIFFENING ONLY WHERE SEISMIC BRACKETS ARE ATTACHED TO THE ROD AND ROD LENGTH (L) EXCEEDS 62". REF. APPROPRIATE M10 PAGES FOR DETAIL.
3. REF. SECTION A15 FOR ALTERNATE ARRANGEMENTS OF SEISMIC BRACES AND MAX OFFSET VALUES.
4. HANGER ROD IS REQUIRED AT ONLY ONE MW-WPL/BRACE BRACKET LOCATION.

REVIEWED FOR CODE COMPLIANCE
HCAi
OPM-0043
BY: William Staehlin
DATE: 01/23/2023
CALIFORNIA BUILDING CODE, 2022

MASON WEST
1601 E. Miraloma Ave. Placentia, CA 92870
TEL (714) 630 - 0701, www.masonwest.com

Jiefu "Jeff" Zhang, SE
California SE No. S5270

PAGE
C1.72

HANGER ROD DIAMETER = 1¼"	PIPING TRANSVERSE SEISMIC SOLID BRACING SYSTEM 24"Ø PIPE MAX	KIT OPTIONS S4T

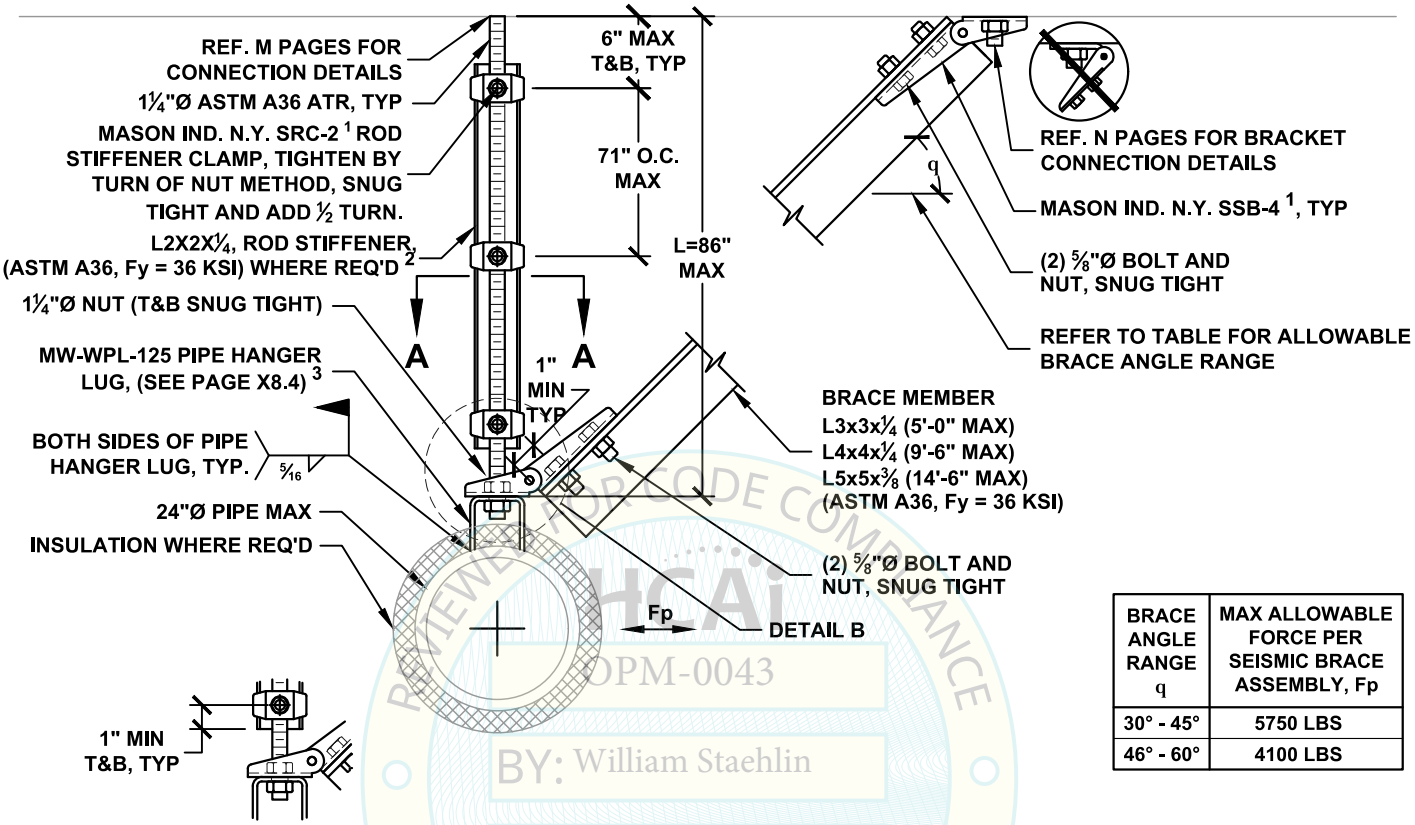

DETAIL B

BRACE ANGLE RANGE q	MAX ALLOWABLE FORCE PER SEISMIC BRACE ASSEMBLY, Fp
30° - 45°	5750 LBS
46° - 60°	4100 LBS

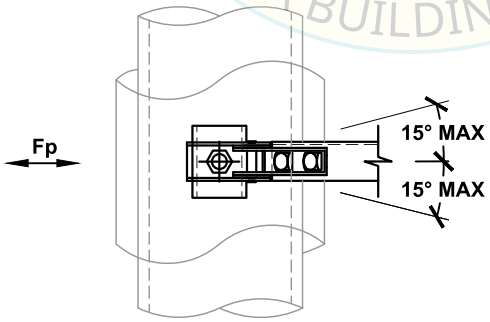

VIEW A-A

OPM-0043
BY: William Staehlin
DATE: 01/23/2023
REVIEWED FOR CODE COMPLIANCE
CALIFORNIA BUILDING CODE, 2022

NOTES:

1. REF. SECTION A10 FOR GENERAL NOTES.
2. PROVIDE ROD STIFFENING ONLY WHERE SEISMIC BRACKETS ARE ATTACHED TO THE ROD AND ROD LENGTH (L) EXCEEDS 46". REF. APPROPRIATE M10 PAGES FOR DETAIL.
3. REF. SECTION A15 FOR ALTERNATE ARRANGEMENTS OF SEISMIC BRACES.

MASON WEST
1601 E. Miraloma Ave. Placentia, CA 92870
TEL (714) 630 - 0701, www.masonwest.com

Jiefu "Jeff" Zhang, SE
California SE No. S5270

PAGE
C1.73

HANGER ROD DIAMETER = 1¼"	PIPING LONGITUDINAL SEISMIC SOLID BRACING SYSTEM 24"Ø PIPE MAX	KIT OPTIONS S4L

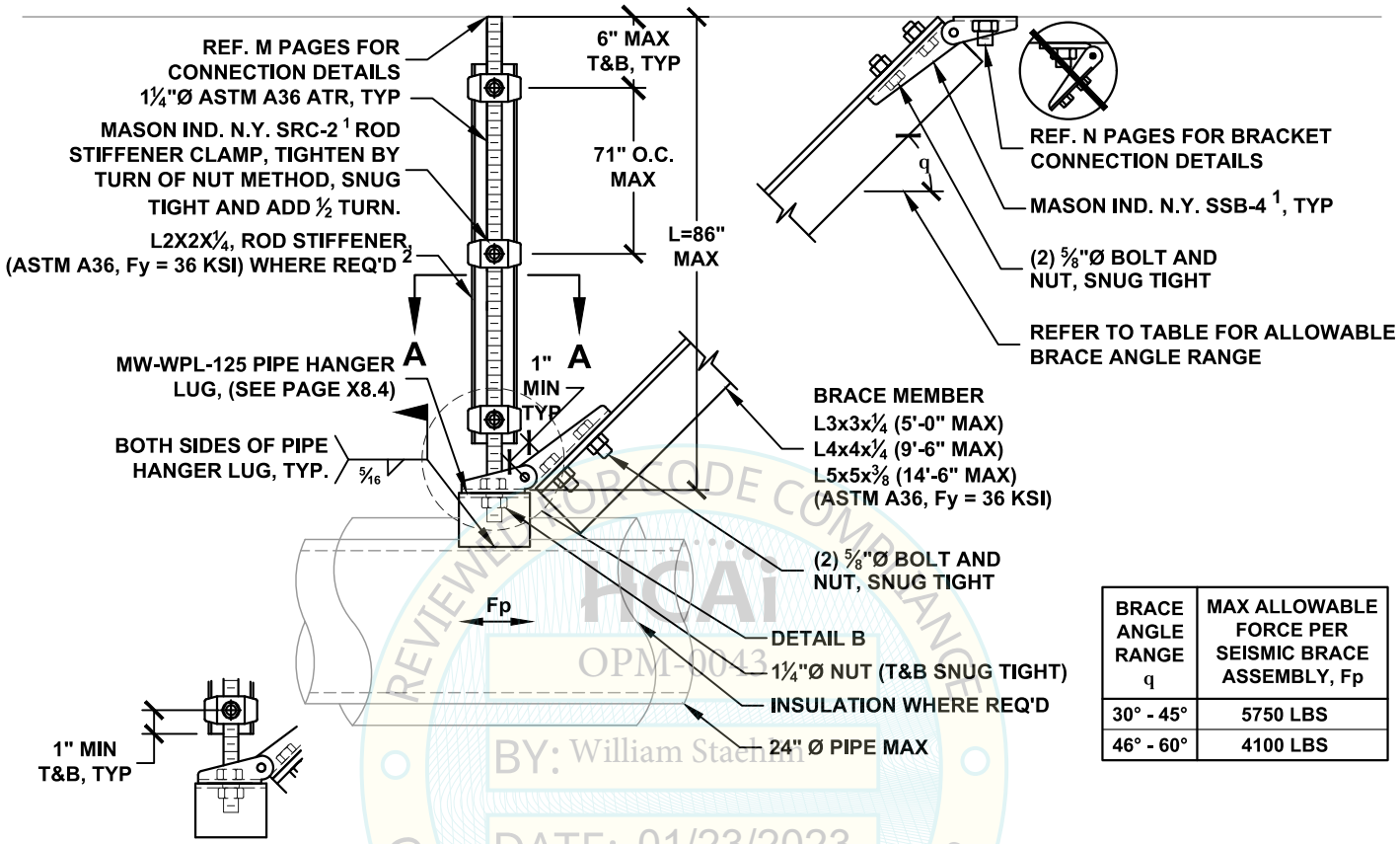

DETAIL B

BRACE ANGLE RANGE q	MAX ALLOWABLE FORCE PER SEISMIC BRACE ASSEMBLY, Fp
30° - 45°	5750 LBS
46° - 60°	4100 LBS

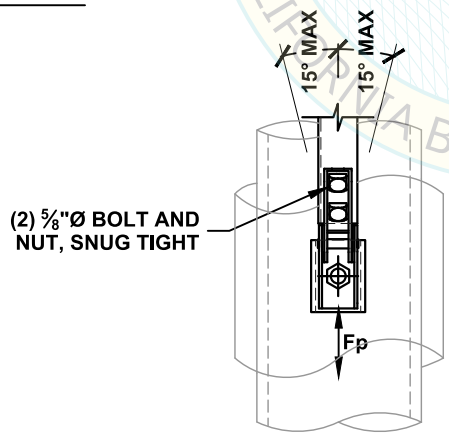

VIEW A-A

NOTES:

1. REF. SECTION A10 FOR GENERAL NOTES.
2. PROVIDE ROD STIFFENING ONLY WHERE SEISMIC BRACKETS ARE ATTACHED TO THE ROD AND ROD LENGTH (L) EXCEEDS 46". REF. APPROPRIATE M10 PAGES FOR DETAIL.

REVIEWED FOR CODE COMPLIANCE
HCAi
OPM-0043
BY: William Staehlin
DATE: 01/23/2023
CALIFORNIA BUILDING CODE, 2022

MASON WEST
1601 E. Miraloma Ave. Placentia, CA 92870
TEL (714) 630 - 0701, www.masonwest.com

Jiefu "Jeff" Zhang, SE
California SE No. S5270

PAGE
C1.74

HANGER ROD DIAMETER = 1¼"	PIPING ALL-DIRECTIONAL SEISMIC SOLID BRACING SYSTEM 24"Ø PIPE MAX	KIT OPTIONS S4A

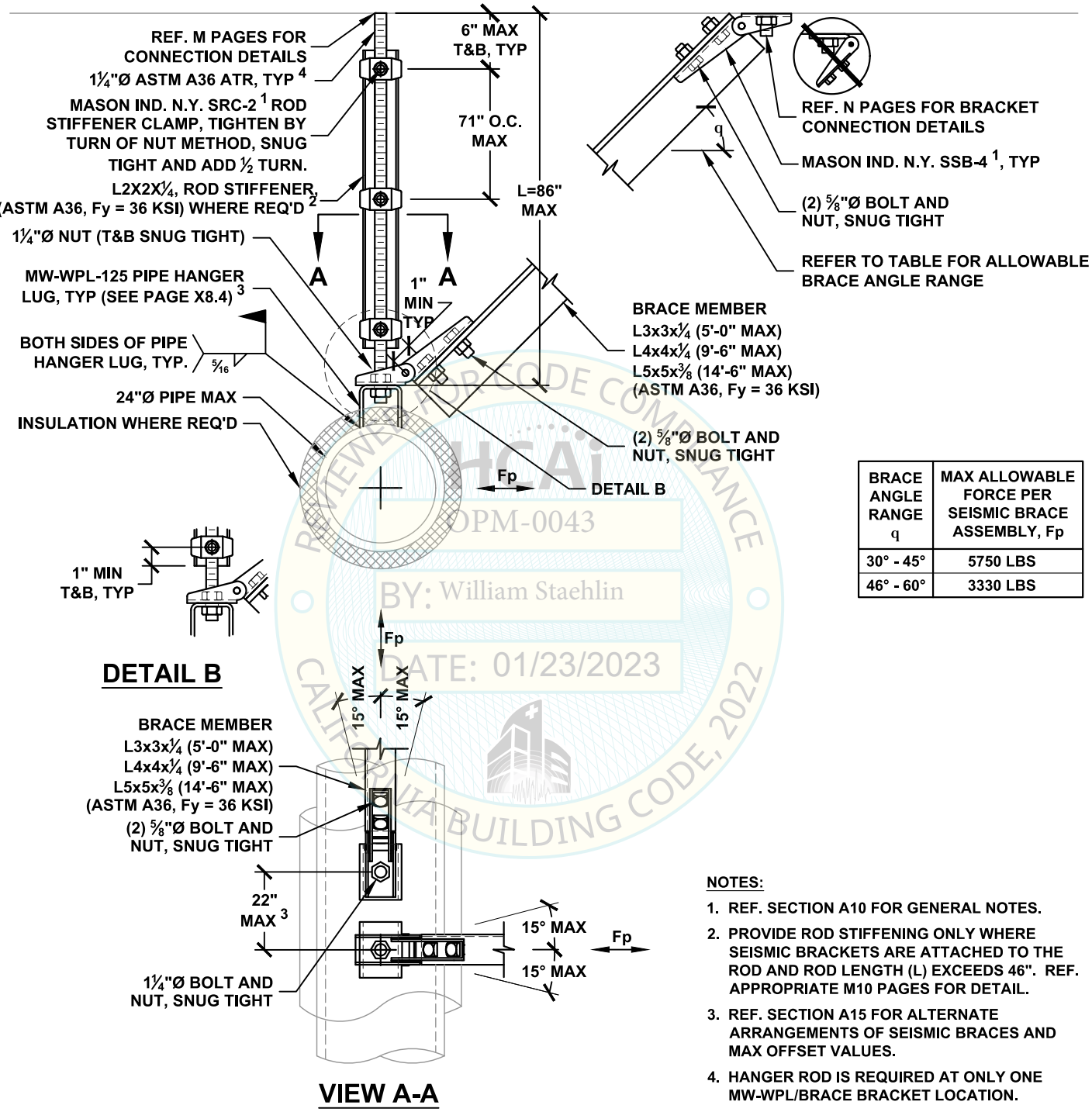

BRACE ANGLE RANGE q	MAX ALLOWABLE FORCE PER SEISMIC BRACE ASSEMBLY, Fp
30° - 45°	5750 LBS
46° - 60°	3330 LBS

DETAIL B

VIEW A-A

NOTES:

1. REF. SECTION A10 FOR GENERAL NOTES.
2. PROVIDE ROD STIFFENING ONLY WHERE SEISMIC BRACKETS ARE ATTACHED TO THE ROD AND ROD LENGTH (L) EXCEEDS 46". REF. APPROPRIATE M10 PAGES FOR DETAIL.
3. REF. SECTION A15 FOR ALTERNATE ARRANGEMENTS OF SEISMIC BRACES AND MAX OFFSET VALUES.
4. HANGER ROD IS REQUIRED AT ONLY ONE MW-WPL/BRACE BRACKET LOCATION.

REVIEWED FOR CODE COMPLIANCE
HCAi
OPM-0043
BY: William Staehlin
DATE: 01/23/2023
CALIFORNIA BUILDING CODE, 2022

MASON WEST
1601 E. Miraloma Ave. Placentia, CA 92870
TEL (714) 630 - 0701, www.masonwest.com

Jiefu "Jeff" Zhang, SE
California SE No. S5270

PAGE
C1.75

HANGER ROD DIAMETER = 3/8"	PIPING/CONDUIT TRANSVERSE SEISMIC CABLE BRACING SYSTEM 2"Ø PIPE/CONDUIT MAX	KIT OPTIONS C0T

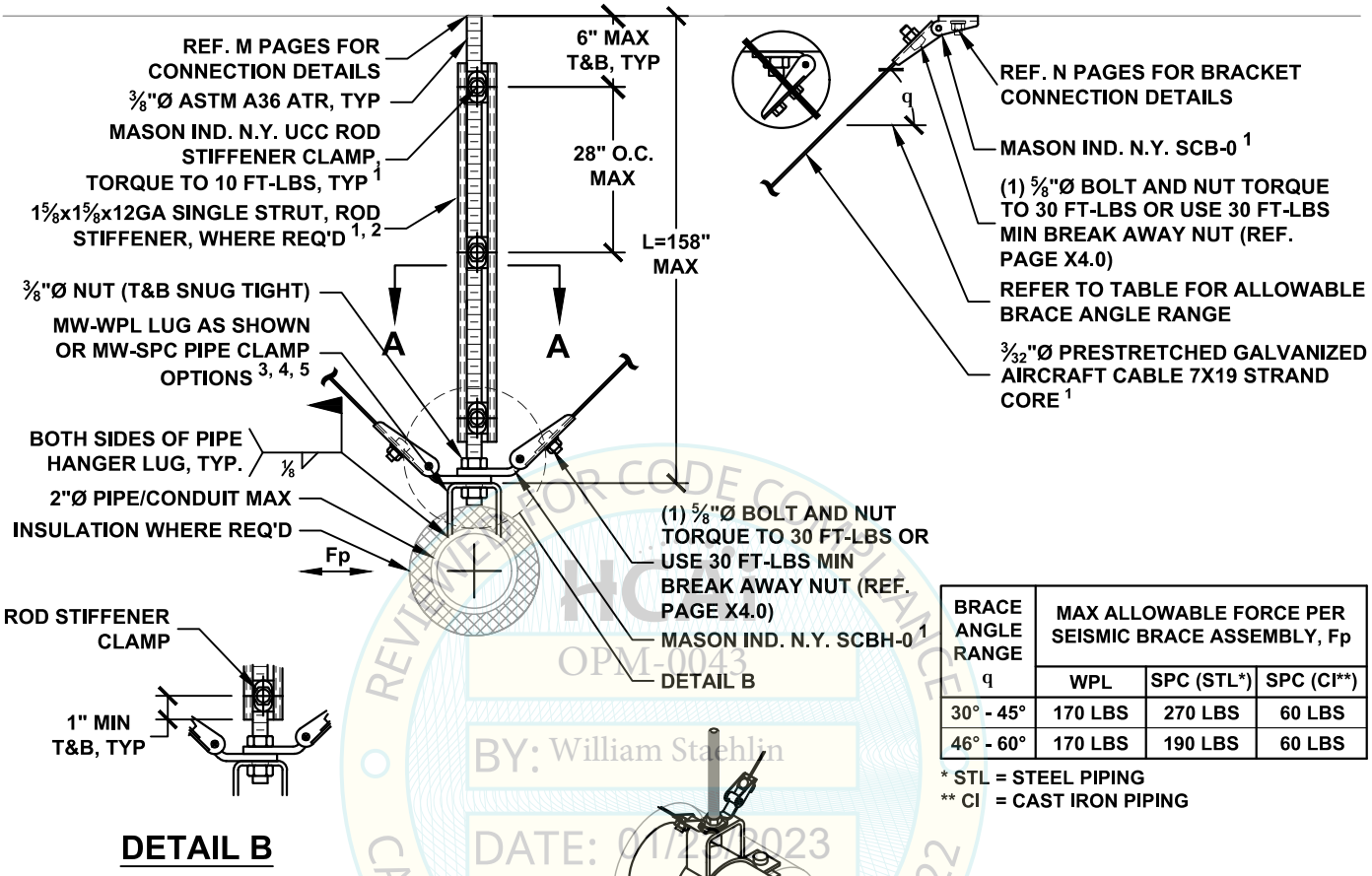

DETAIL B

BRACE ANGLE RANGE q	MAX ALLOWABLE FORCE PER SEISMIC BRACE ASSEMBLY, Fp		
	WPL	SPC (STL*)	SPC (CI**)
30° - 45°	170 LBS	270 LBS	60 LBS
46° - 60°	170 LBS	190 LBS	60 LBS

* STL = STEEL PIPING
** CI = CAST IRON PIPING

SPC OPTION

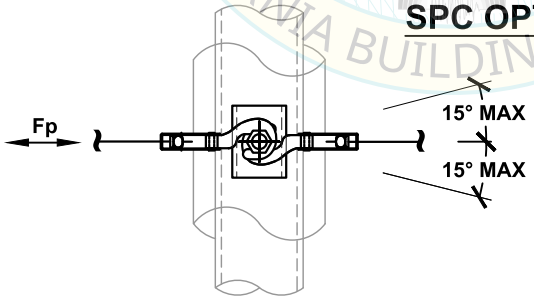

VIEW A-A

NOTES:

1. REF. SECTION A10 OR A20 FOR GENERAL NOTES.
2. PROVIDE ROD STIFFENING ONLY WHERE SEISMIC BRACKET IS ATTACHED TO THE ROD AND ROD LENGTH (L) EXCEEDS 18". REF. APPROPRIATE M10 PAGES FOR DETAIL.
3. FOR PIPE/CONDUIT SIZES UP TO 2"Ø MAX, USE RESPECTIVE MW-SPC SIZE (REF. X8.3-X8.3.1) OR USE MW-WPL-38 (REF. X8.4).
4. REF. SECTION A15 OR A25 ALTERNATE ARRANGEMENTS OF SEISMIC BRACES.
5. REF. PAGE A19.1 OR A28.1 FOR PIPE/CONDUIT CLAMP OPTION.

REVIEWED FOR CODE COMPLIANCE
OPM-0043
BY: William Staehlin
DATE: 01/23/2023
CALIFORNIA BUILDING CODE, 2022

MASON WEST
1601 E. Miraloma Ave. Placentia, CA 92870
TEL (714) 630 - 0701, www.masonwest.com

Jiefu "Jeff" Zhang, SE
California SE No. S5270

HANGER ROD DIAMETER = 3/8"	PIPING/CONDUIT LONGITUDINAL SEISMIC CABLE BRACING SYSTEM 2"Ø PIPE/CONDUIT MAX	KIT OPTIONS C0L

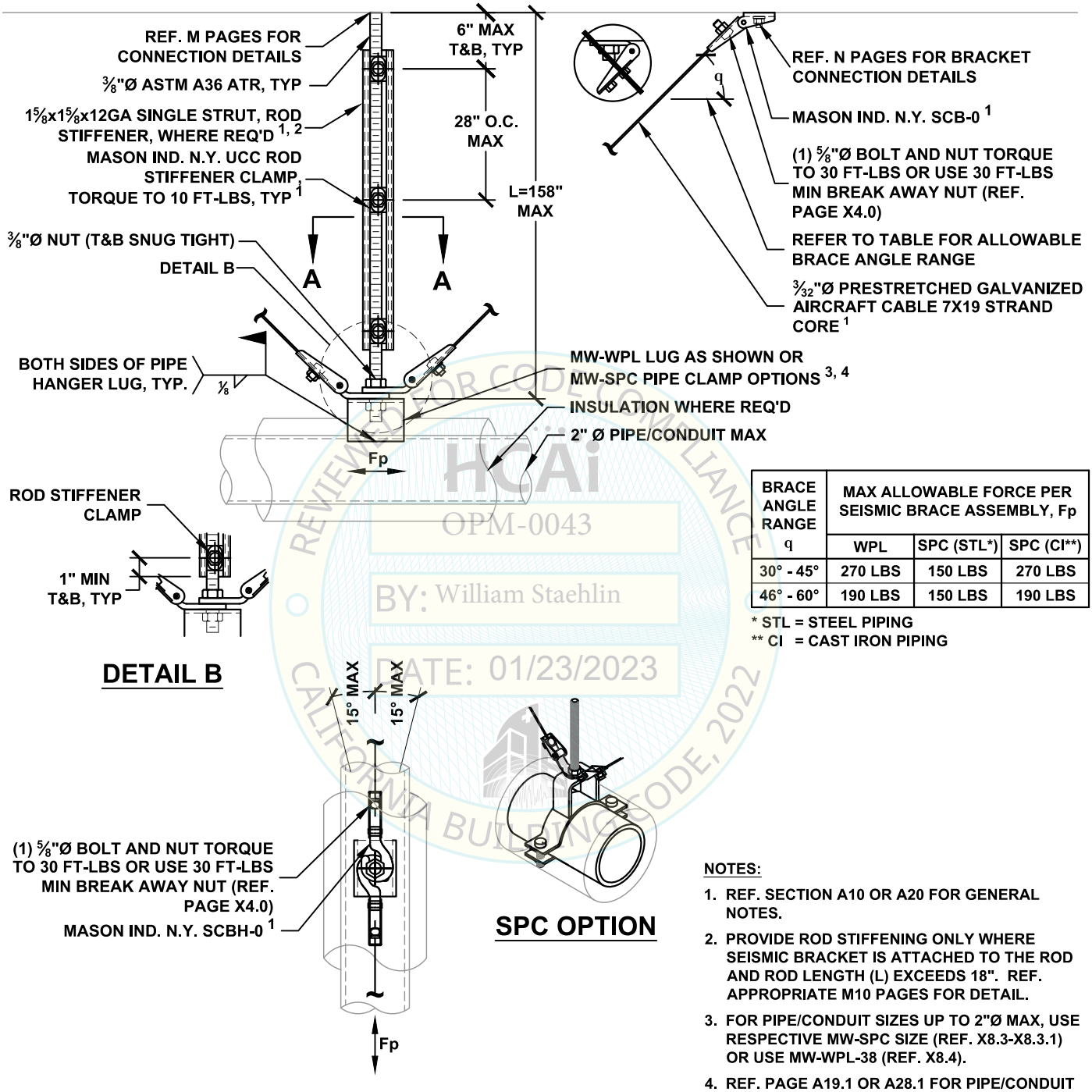

BRACE ANGLE RANGE q	MAX ALLOWABLE FORCE PER SEISMIC BRACE ASSEMBLY, Fp		
	WPL	SPC (STL*)	SPC (CI**)
30° - 45°	270 LBS	150 LBS	270 LBS
46° - 60°	190 LBS	150 LBS	190 LBS

* STL = STEEL PIPING
** CI = CAST IRON PIPING

HCAi
OPM-0043
BY: William Staehlin
DATE: 01/23/2023
REVIEWED FOR CODE COMPLIANCE
CALIFORNIA BUILDING CODE, 2022

NOTES:

1. REF. SECTION A10 OR A20 FOR GENERAL NOTES.
2. PROVIDE ROD STIFFENING ONLY WHERE SEISMIC BRACKET IS ATTACHED TO THE ROD AND ROD LENGTH (L) EXCEEDS 18". REF. APPROPRIATE M10 PAGES FOR DETAIL.
3. FOR PIPE/CONDUIT SIZES UP TO 2"Ø MAX, USE RESPECTIVE MW-SPC SIZE (REF. X8.3-X8.3.1) OR USE MW-WPL-38 (REF. X8.4).
4. REF. PAGE A19.1 OR A28.1 FOR PIPE/CONDUIT CLAMP OPTION.

MASON WEST
1601 E. Miraloma Ave. Placentia, CA 92870
TEL (714) 630 - 0701, www.masonwest.com

Jiefu "Jeff" Zhang, SE
California SE No. S5270

PAGE
C2.11

HANGER ROD DIAMETER = 3/8"	PIPING/CONDUIT ALL-DIRECTIONAL SEISMIC CABLE BRACING SYSTEM 2"Ø PIPE/CONDUIT MAX	KIT OPTIONS C0A

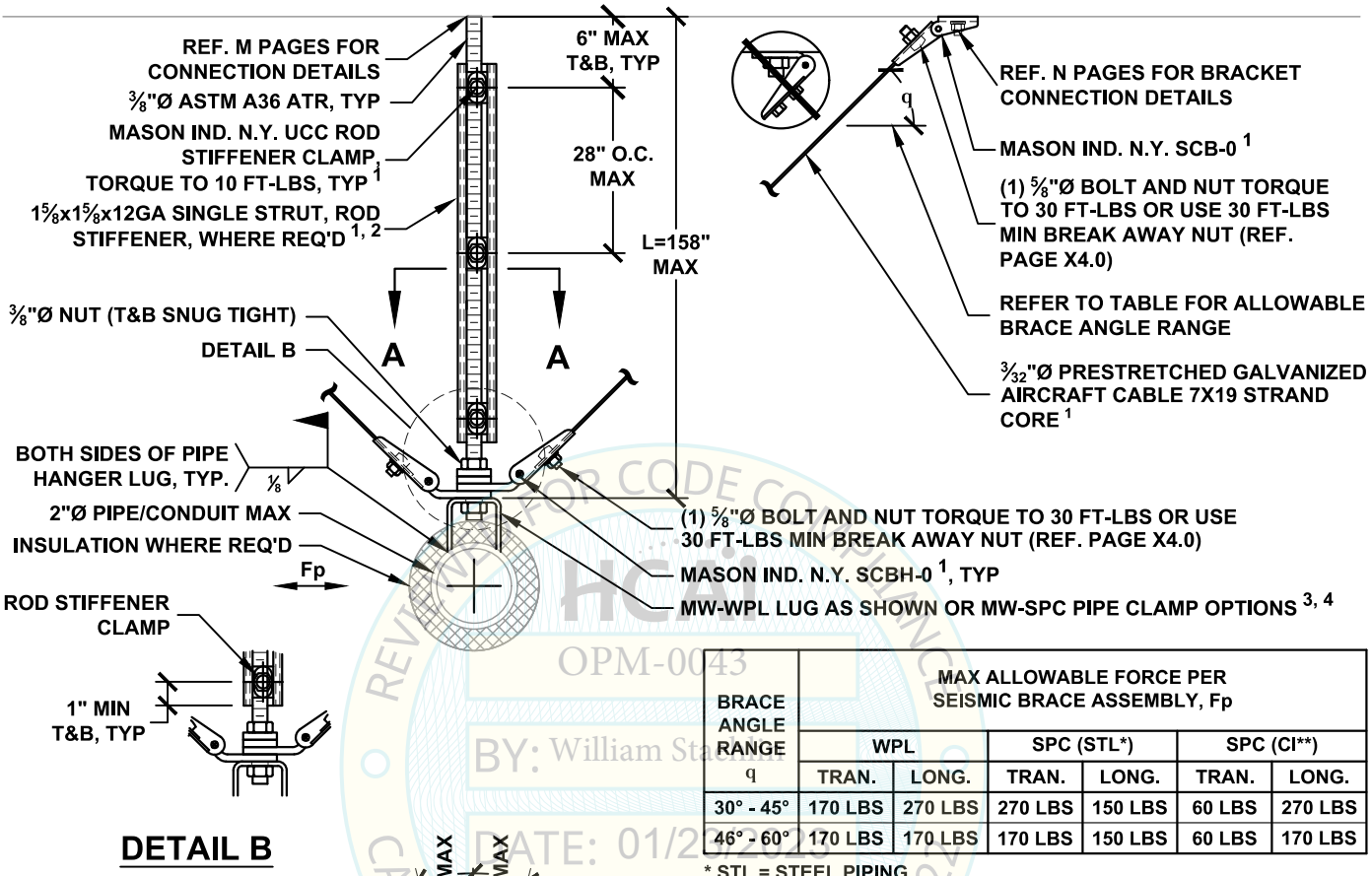

DETAIL B

BRACE ANGLE RANGE q	MAX ALLOWABLE FORCE PER SEISMIC BRACE ASSEMBLY, Fp					
	WPL		SPC (STL*)		SPC (CI**)	
	TRAN.	LONG.	TRAN.	LONG.	TRAN.	LONG.
30° - 45°	170 LBS	270 LBS	270 LBS	150 LBS	60 LBS	270 LBS
46° - 60°	170 LBS	170 LBS	170 LBS	150 LBS	60 LBS	170 LBS

* STL = STEEL PIPING
** CI = CAST IRON PIPING

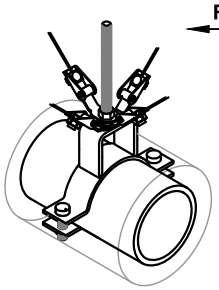

SPC OPTION

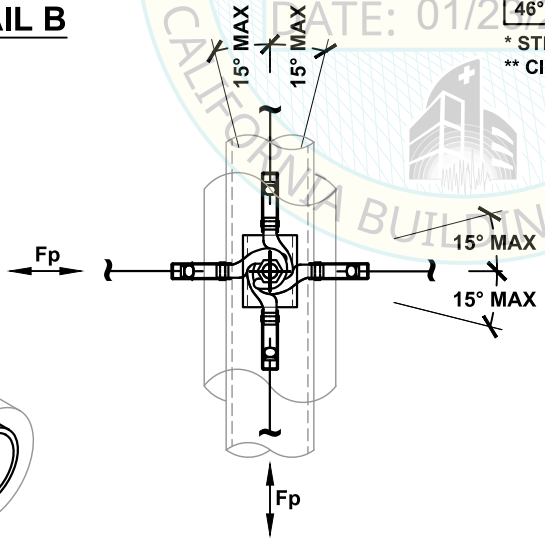

VIEW A-A

NOTES:

1. REF. SECTION A10 OR A20 FOR GENERAL NOTES.
2. PROVIDE ROD STIFFENING ONLY WHERE SEISMIC BRACKET IS ATTACHED TO THE ROD AND ROD LENGTH (L) EXCEEDS 18". REF. APPROPRIATE M10 PAGES FOR DETAIL.
3. FOR PIPE/CONDUIT SIZES UP TO 2"Ø MAX, USE RESPECTIVE MW-SPC SIZE (REF. X8.3-X8.3.1) OR USE MW-WPL-38 (REF. X8.4).
4. REF. PAGE A19.1 OR A28.1 FOR PIPE/CONDUIT CLAMP OPTION.

HCAI OPM-0043 BY: William Staehlin DATE: 01/23/2023 REVIEWED FOR CODE COMPLIANCE CALIFORNIA BUILDING CODE, 2022

MASON WEST
1601 E. Miraloma Ave. Placentia, CA 92870
TEL (714) 630 - 0701, www.masonwest.com

Jiefu "Jeff" Zhang, SE
California SE No. S5270

PAGE
C2.12

HANGER ROD DIAMETER = ½"	PIPING/CONDUIT TRANSVERSE SEISMIC CABLE BRACING SYSTEM 3"Ø PIPE/CONDUIT MAX	KIT OPTIONS C1T

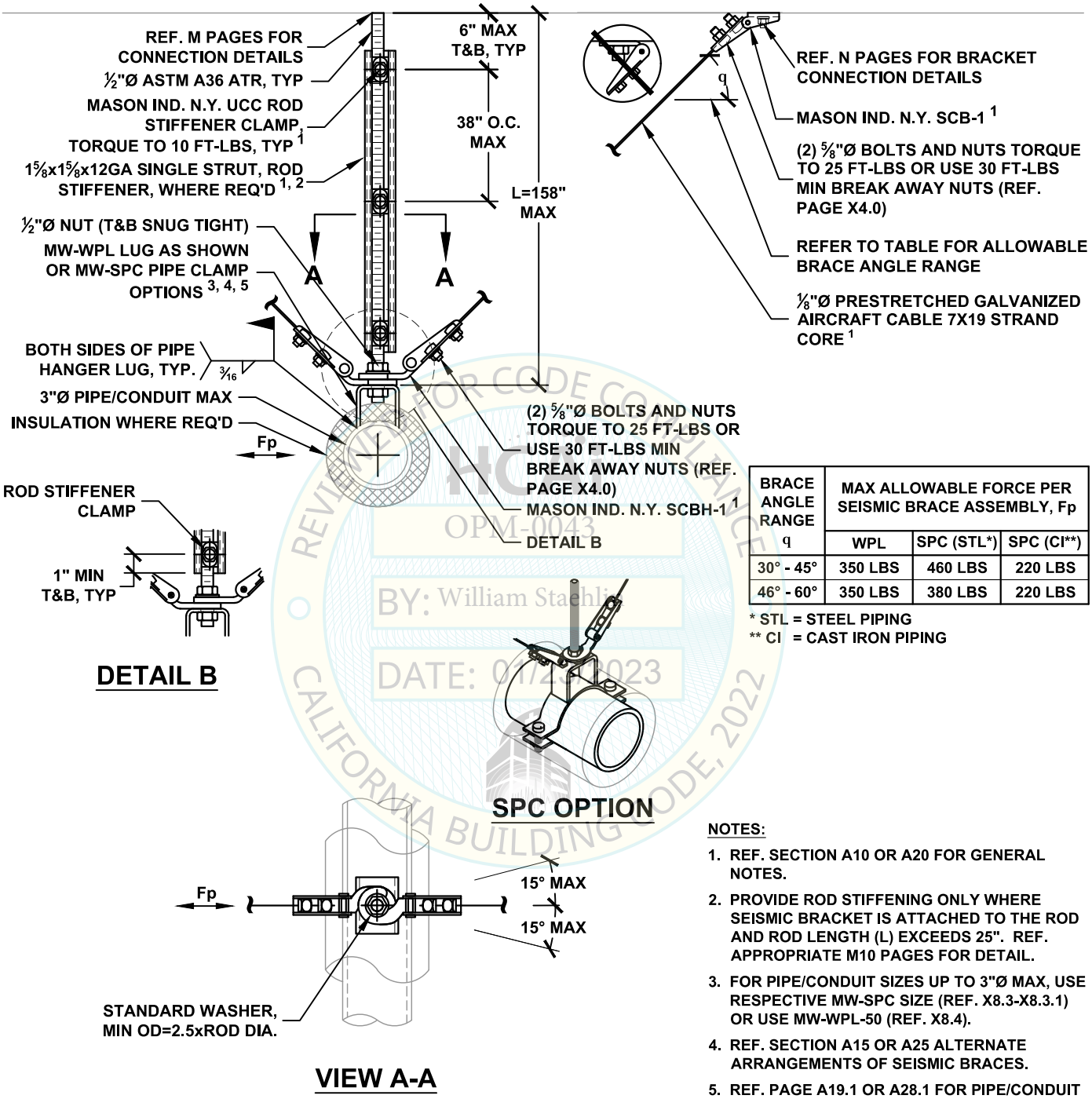

BRACE ANGLE RANGE q	MAX ALLOWABLE FORCE PER SEISMIC BRACE ASSEMBLY, Fp		
	WPL	SPC (STL*)	SPC (CI**)
30° - 45°	350 LBS	460 LBS	220 LBS
46° - 60°	350 LBS	380 LBS	220 LBS

* STL = STEEL PIPING
** CI = CAST IRON PIPING

NOTES:

1. REF. SECTION A10 OR A20 FOR GENERAL NOTES.
2. PROVIDE ROD STIFFENING ONLY WHERE SEISMIC BRACKET IS ATTACHED TO THE ROD AND ROD LENGTH (L) EXCEEDS 25". REF. APPROPRIATE M10 PAGES FOR DETAIL.
3. FOR PIPE/CONDUIT SIZES UP TO 3"Ø MAX, USE RESPECTIVE MW-SPC SIZE (REF. X8.3-X8.3.1) OR USE MW-WPL-50 (REF. X8.4).
4. REF. SECTION A15 OR A25 ALTERNATE ARRANGEMENTS OF SEISMIC BRACES.
5. REF. PAGE A19.1 OR A28.1 FOR PIPE/CONDUIT CLAMP OPTION.

REVIEWED FOR CODE COMPLIANCE
OPM-0043
BY: William Staehlin
DATE: 01/23/2023
CALIFORNIA BUILDING CODE, 2022

MASON WEST
1601 E. Miraloma Ave. Placentia, CA 92870
TEL (714) 630 - 0701, www.masonwest.com

Jiefu "Jeff" Zhang, SE
California SE No. S5270

PAGE
C2.20

HANGER ROD DIAMETER = ½"	PIPING/CONDUIT LONGITUDINAL SEISMIC CABLE BRACING SYSTEM 3"Ø PIPE/CONDUIT MAX	KIT OPTIONS C1L

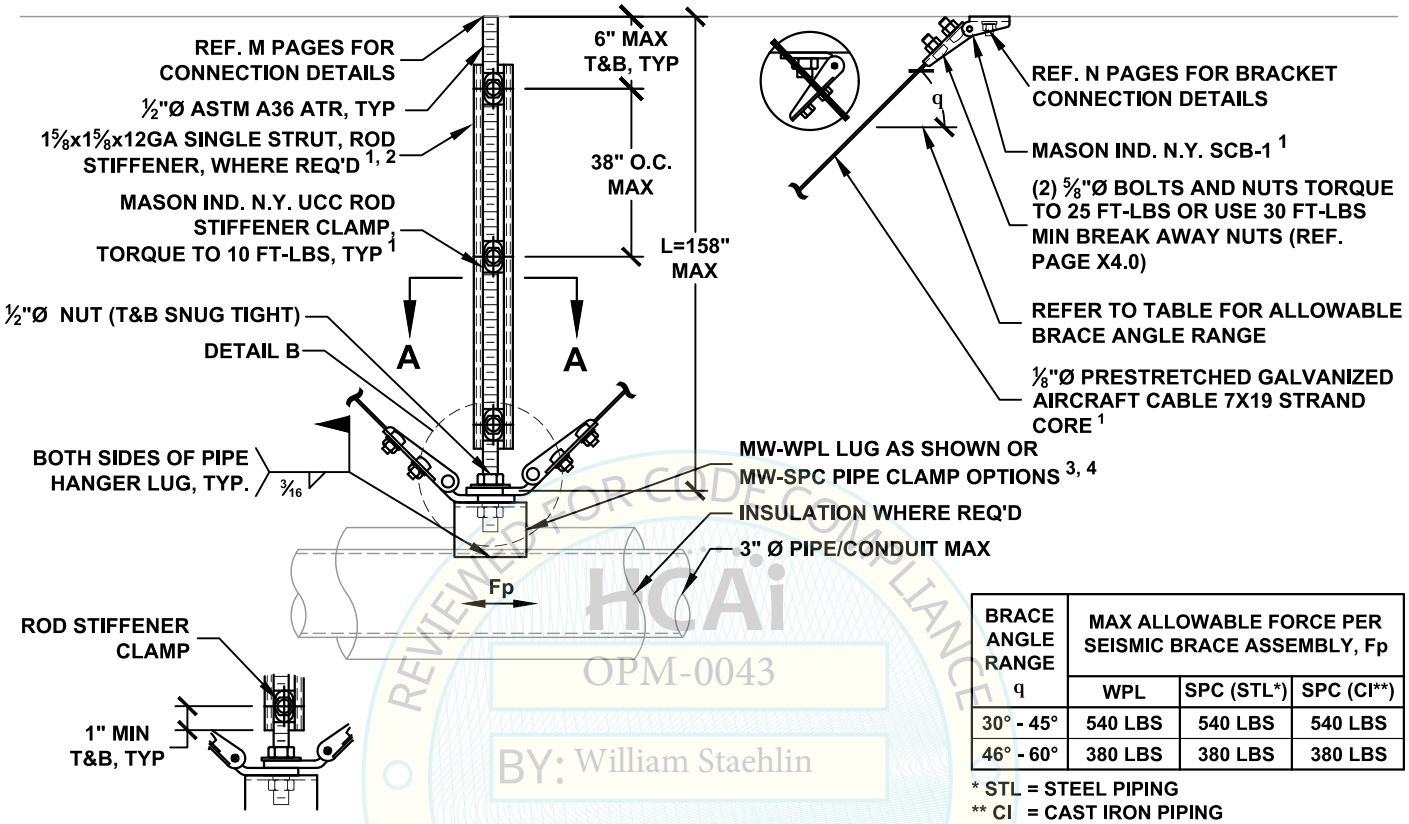

DETAIL B

BRACE ANGLE RANGE q	MAX ALLOWABLE FORCE PER SEISMIC BRACE ASSEMBLY, Fp		
	WPL	SPC (STL*)	SPC (CI**)
30° - 45°	540 LBS	540 LBS	540 LBS
46° - 60°	380 LBS	380 LBS	380 LBS

* STL = STEEL PIPING
** CI = CAST IRON PIPING

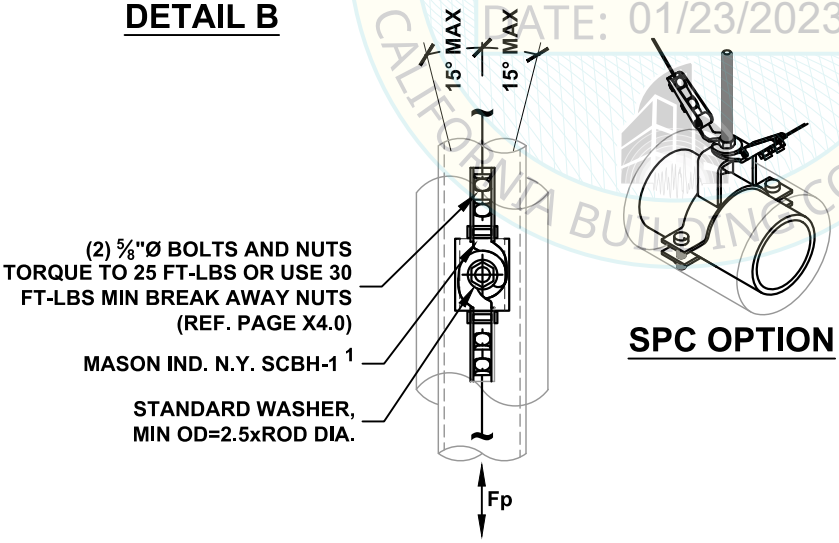

VIEW A-A

SPC OPTION

NOTES:

1. REF. SECTION A10 OR A20 FOR GENERAL NOTES.
2. PROVIDE ROD STIFFENING ONLY WHERE SEISMIC BRACKET IS ATTACHED TO THE ROD AND ROD LENGTH (L) EXCEEDS 25". REF. APPROPRIATE M10 PAGES FOR DETAIL.
3. FOR PIPE/CONDUIT SIZES UP TO 3"Ø MAX, USE RESPECTIVE MW-SPC SIZE (REF. X8.3-X8.3.1) OR USE MW-WPL-50 (REF. X8.4).
4. REF. PAGE A19.1 OR A28.1 FOR PIPE/CONDUIT CLAMP OPTION.

HCAi
OPM-0043
BY: William Staehlin
DATE: 01/23/2023
REVIEWED FOR CODE COMPLIANCE
CALIFORNIA BUILDING CODE, 2022

MASON WEST
1601 E. Miraloma Ave. Placentia, CA 92870
TEL (714) 630 - 0701, www.masonwest.com

Jiefu "Jeff" Zhang, SE
California SE No. S5270

PAGE
C2.21

HANGER ROD DIAMETER = ½"	PIPING/CONDUIT ALL-DIRECTIONAL SEISMIC CABLE BRACING SYSTEM 3"Ø PIPE/CONDUIT MAX	KIT OPTIONS C1A

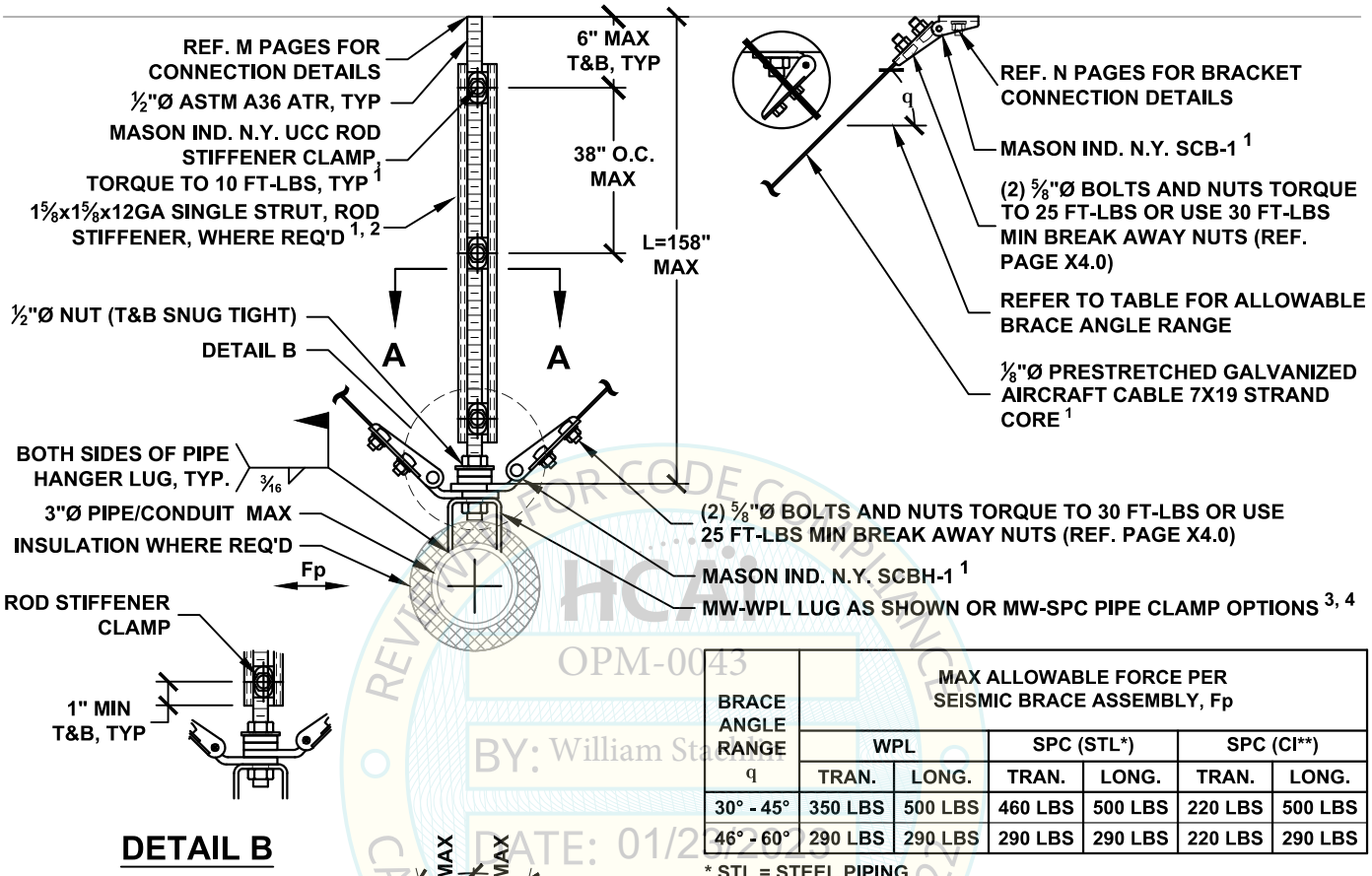

DETAIL B

BRACE ANGLE RANGE q	MAX ALLOWABLE FORCE PER SEISMIC BRACE ASSEMBLY, Fp					
	WPL		SPC (STL*)		SPC (CI**)	
	TRAN.	LONG.	TRAN.	LONG.	TRAN.	LONG.
30° - 45°	350 LBS	500 LBS	460 LBS	500 LBS	220 LBS	500 LBS
46° - 60°	290 LBS	290 LBS	290 LBS	290 LBS	220 LBS	290 LBS

* STL = STEEL PIPING
** CI = CAST IRON PIPING

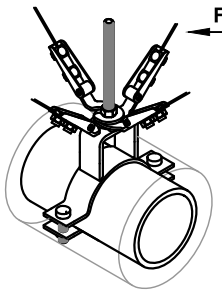

SPC OPTION

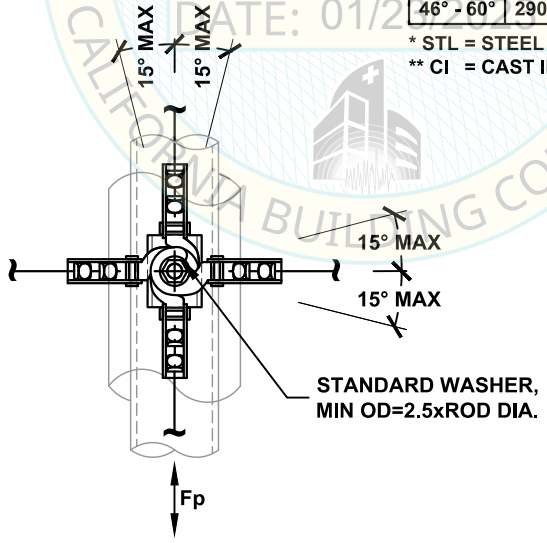

VIEW A-A

NOTES:

1. REF. SECTION A10 OR A20 FOR GENERAL NOTES.
2. PROVIDE ROD STIFFENING ONLY WHERE SEISMIC BRACKET IS ATTACHED TO THE ROD AND ROD LENGTH (L) EXCEEDS 25". REF. APPROPRIATE M10 PAGES FOR DETAIL.
3. FOR PIPE/CONDUIT SIZES UP TO 3"Ø MAX, USE RESPECTIVE MW-SPC SIZE (REF. X8.3-X8.3.1) OR USE MW-WPL-50 (REF. X8.4).
4. REF. PAGE A19.1 OR A28.1 FOR PIPE/CONDUIT CLAMP OPTION.

OPM-0043
BY: William Staehlin
DATE: 01/23/2023
REVIEWED FOR CODE COMPLIANCE
CALIFORNIA BUILDING CODE, 2022

MASON WEST
1601 E. Miraloma Ave. Placentia, CA 92870
TEL (714) 630 - 0701, www.masonwest.com

Jiefu "Jeff" Zhang, SE
California SE No. S5270

PAGE
C2.22

HANGER ROD DIAMETER = 5/8"	PIPING/CONDUIT TRANSVERSE SEISMIC CABLE BRACING SYSTEM 5"Ø PIPE/CONDUIT MAX	KIT OPTIONS C1T

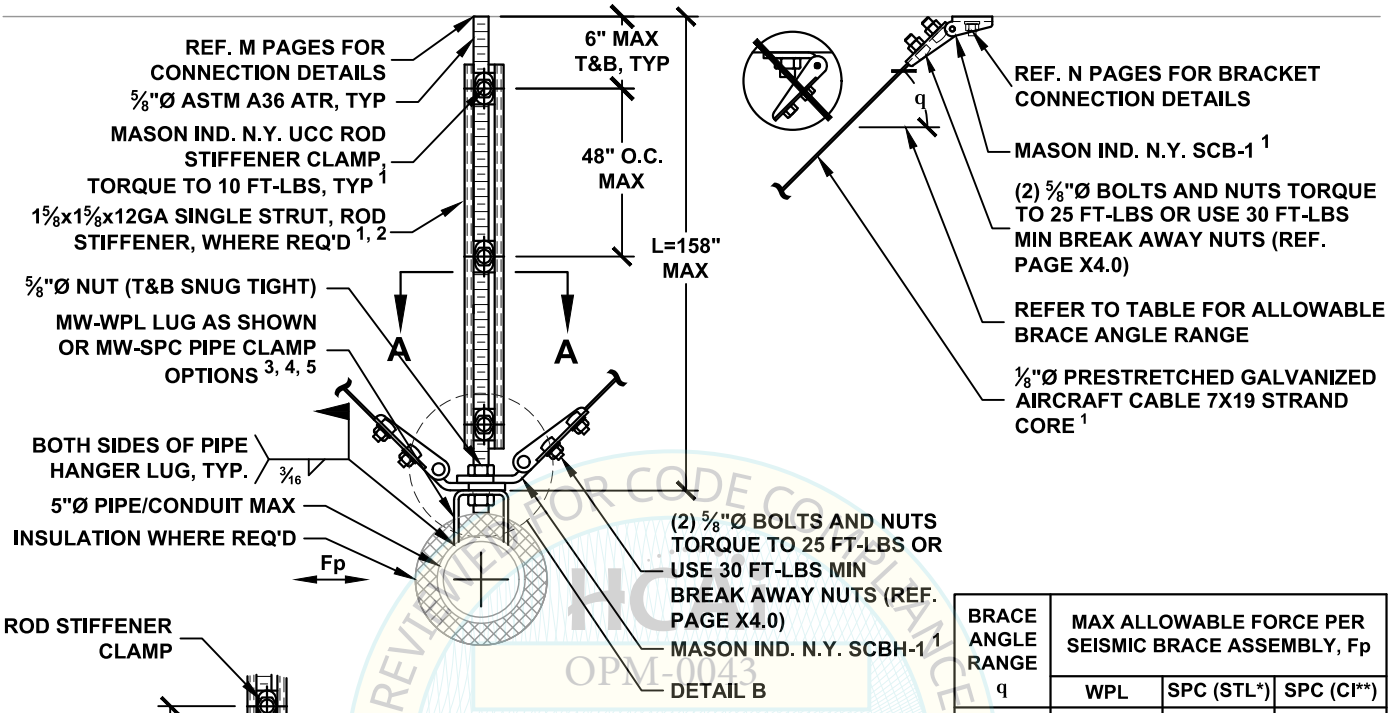

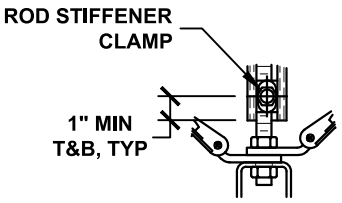

DETAIL B

BRACE ANGLE RANGE q	MAX ALLOWABLE FORCE PER SEISMIC BRACE ASSEMBLY, Fp		
	WPL	SPC (STL*)	SPC (CI**)
30° - 45°	540 LBS	300 LBS	270 LBS
46° - 60°	380 LBS	300 LBS	270 LBS

* STL = STEEL PIPING
** CI = CAST IRON PIPING

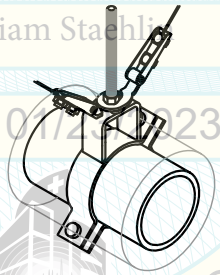

SPC OPTION

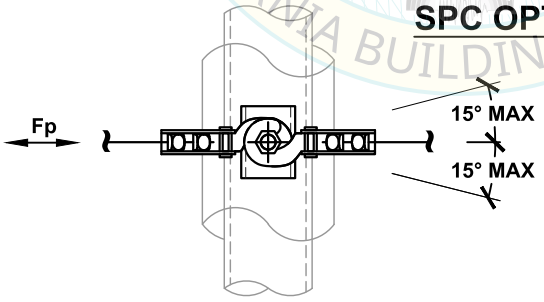

VIEW A-A

NOTES:

1. REF. SECTION A10 OR A20 FOR GENERAL NOTES.
2. PROVIDE ROD STIFFENER ONLY WHERE SEISMIC BRACKET IS ATTACHED TO THE ROD AND ROD LENGTH (L) EXCEEDS 31". REF. APPROPRIATE M10 PAGES FOR DETAILS.
3. FOR PIPE/CONDUIT SIZES UP TO 5"Ø MAX, USE RESPECTIVE MW-SPC SIZE (REF. X8.3-X8.3.1) OR USE MW-WPL-63 (REF. X8.4).
4. REF. SECTION A15 OR A25 ALTERNATE ARRANGEMENTS OF SEISMIC BRACES.
5. REF. PAGE A19.1 OR A28.1 FOR PIPE/CONDUIT CLAMP OPTION.

REVIEWED FOR CODE COMPLIANCE
OPM-0043
BY: William Staehlin
DATE: 01/23/2023
CALIFORNIA BUILDING CODE, 2022

MASON WEST
1601 E. Miraloma Ave. Placentia, CA 92870
TEL (714) 630 - 0701, www.masonwest.com

Jiefu "Jeff" Zhang, SE
California SE No. S5270

PAGE
C2.30

HANGER ROD DIAMETER = 5/8"	PIPING/CONDUIT LONGITUDINAL SEISMIC CABLE BRACING SYSTEM 5"Ø PIPE/CONDUIT MAX	KIT OPTIONS C1L

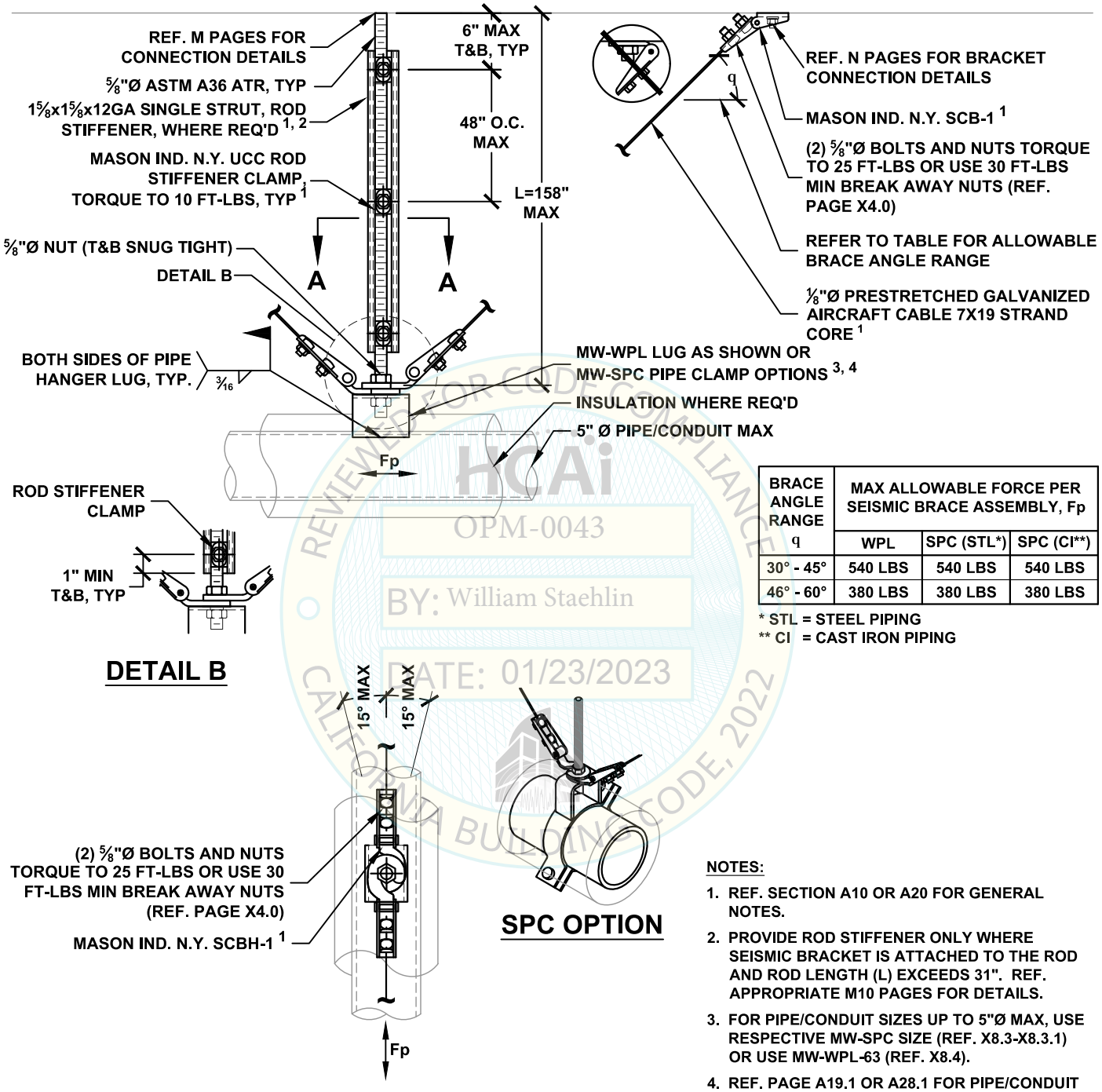

BRACE ANGLE RANGE q	MAX ALLOWABLE FORCE PER SEISMIC BRACE ASSEMBLY, Fp		
	WPL	SPC (STL*)	SPC (CI**)
30° - 45°	540 LBS	540 LBS	540 LBS
46° - 60°	380 LBS	380 LBS	380 LBS

* STL = STEEL PIPING
** CI = CAST IRON PIPING

HCAi
OPM-0043
BY: William Staehlin
DATE: 01/23/2023
REVIEWED FOR CODE COMPLIANCE
CALIFORNIA BUILDING CODE, 2022

NOTES:

1. REF. SECTION A10 OR A20 FOR GENERAL NOTES.
2. PROVIDE ROD STIFFENER ONLY WHERE SEISMIC BRACKET IS ATTACHED TO THE ROD AND ROD LENGTH (L) EXCEEDS 31". REF. APPROPRIATE M10 PAGES FOR DETAILS.
3. FOR PIPE/CONDUIT SIZES UP TO 5"Ø MAX, USE RESPECTIVE MW-SPC SIZE (REF. X8.3-X8.3.1) OR USE MW-WPL-63 (REF. X8.4).
4. REF. PAGE A19.1 OR A28.1 FOR PIPE/CONDUIT CLAMP OPTION.

MASON WEST
1601 E. Miraloma Ave. Placentia, CA 92870
TEL (714) 630 - 0701, www.masonwest.com

Jiefu "Jeff" Zhang, SE
California SE No. S5270

PAGE
C2.31

HANGER ROD DIAMETER = 5/8"	PIPING/CONDUIT ALL-DIRECTIONAL SEISMIC CABLE BRACING SYSTEM 5"Ø PIPE/CONDUIT MAX	KIT OPTIONS C1A

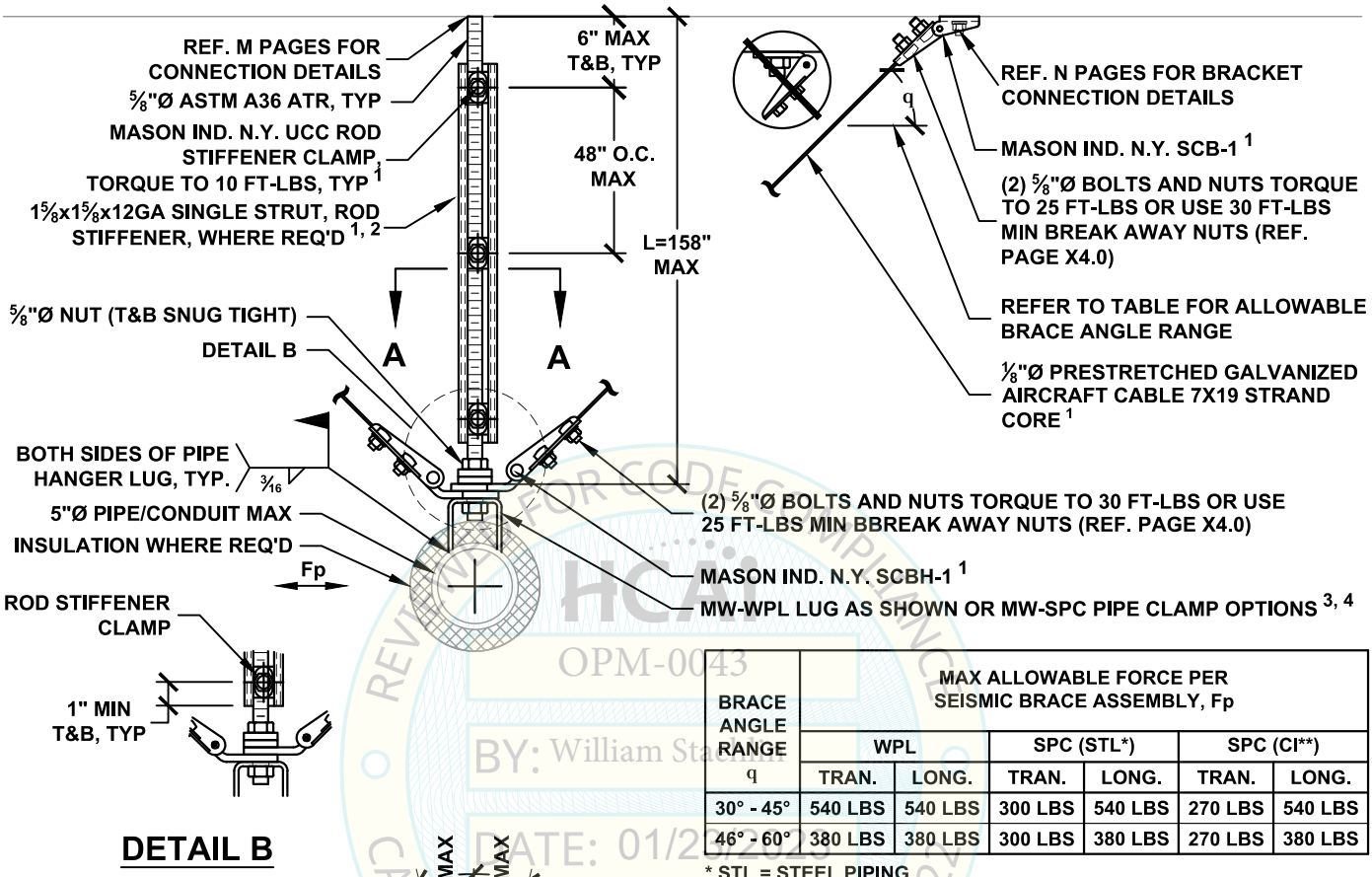

DETAIL B

BRACE ANGLE RANGE q	MAX ALLOWABLE FORCE PER SEISMIC BRACE ASSEMBLY, Fp					
	WPL		SPC (STL*)		SPC (CI**)	
	TRAN.	LONG.	TRAN.	LONG.	TRAN.	LONG.
30° - 45°	540 LBS	540 LBS	300 LBS	540 LBS	270 LBS	540 LBS
46° - 60°	380 LBS	380 LBS	300 LBS	380 LBS	270 LBS	380 LBS

* STL = STEEL PIPING
** CI = CAST IRON PIPING

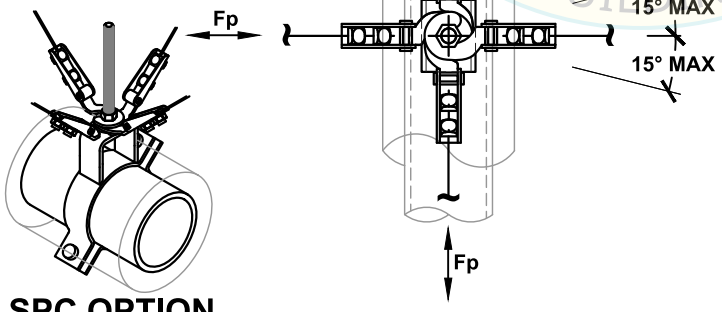

SPC OPTION

VIEW A-A

NOTES:

1. REF. SECTION A10 OR A20 FOR GENERAL NOTES.
2. PROVIDE ROD STIFFENER ONLY WHERE SEISMIC BRACKET IS ATTACHED TO THE ROD AND ROD LENGTH (L) EXCEEDS 31". REF. APPROPRIATE M10 PAGES FOR DETAILS.
3. FOR PIPE/CONDUIT SIZES UP TO 5"Ø MAX, USE RESPECTIVE MW-SPC SIZE (REF. X8.3-X8.3.1) OR USE MW-WPL-63 (REF. X8.4).
4. REF. PAGE A19.1 OR A28.1 FOR PIPE/CONDUIT CLAMP OPTION.

OPM-0043
BY: William Staehlin
DATE: 01/23/2023
REVIEWED FOR CODE COMPLIANCE
CALIFORNIA BUILDING CODE, 2022

MASON WEST
1601 E. Miraloma Ave. Placentia, CA 92870
TEL (714) 630 - 0701, www.masonwest.com

Jiefu "Jeff" Zhang, SE
California SE No. S5270

PAGE
C2.32

HANGER ROD DIAMETER = ¾"	PIPING TRANSVERSE SEISMIC CABLE BRACING SYSTEM 12"Ø PIPE MAX	KIT OPTIONS C2T

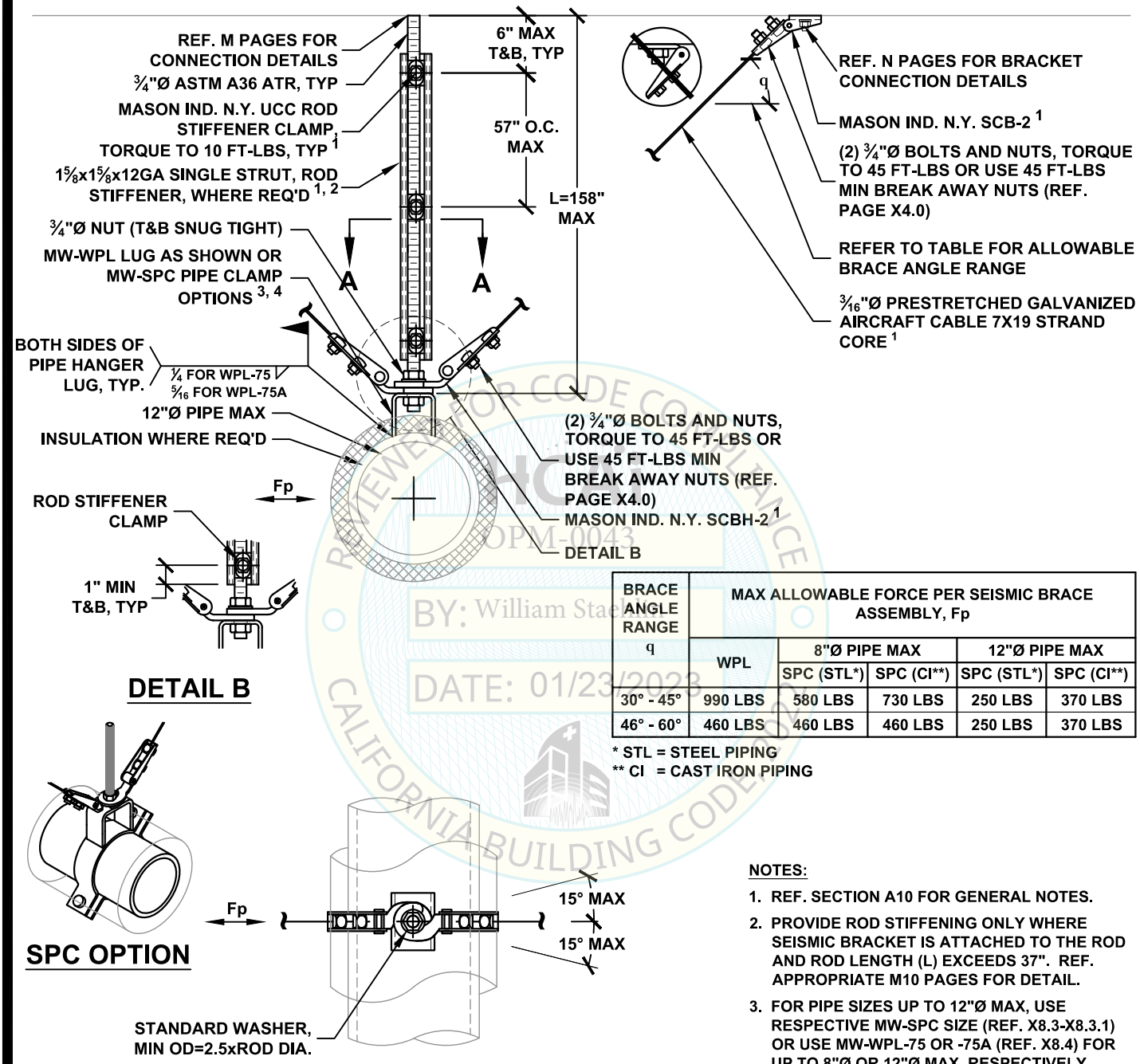

DETAIL B

BRACE ANGLE RANGE q	MAX ALLOWABLE FORCE PER SEISMIC BRACE ASSEMBLY, Fp				
	WPL	8"Ø PIPE MAX		12"Ø PIPE MAX	
		SPC (STL*)	SPC (CI**)	SPC (STL*)	SPC (CI**)
30° - 45°	990 LBS	580 LBS	730 LBS	250 LBS	370 LBS
46° - 60°	460 LBS	460 LBS	460 LBS	250 LBS	370 LBS

* STL = STEEL PIPING
** CI = CAST IRON PIPING

SPC OPTION

VIEW A-A

NOTES:

1. REF. SECTION A10 FOR GENERAL NOTES.
2. PROVIDE ROD STIFFENING ONLY WHERE SEISMIC BRACKET IS ATTACHED TO THE ROD AND ROD LENGTH (L) EXCEEDS 37". REF. APPROPRIATE M10 PAGES FOR DETAIL.
3. FOR PIPE SIZES UP TO 12"Ø MAX, USE RESPECTIVE MW-SPC SIZE (REF. X8.3-X8.3.1) OR USE MW-WPL-75 OR -75A (REF. X8.4) FOR UP TO 8"Ø OR 12"Ø MAX, RESPECTIVELY. MW-SPC MAY REDUCE MAX ALLOWABLE Fp.
4. REF. SECTION A15 FOR ALTERNATE ARRANGEMENTS OF SEISMIC BRACES.

REVIEWED FOR CODE COMPLIANCE
OPM-0043
BY: William Staehlin
DATE: 01/23/2023
CALIFORNIA BUILDING CODE

MASON WEST
1601 E. Miraloma Ave. Placentia, CA 92870
TEL (714) 630 - 0701, www.masonwest.com

Jiefu "Jeff" Zhang, SE
California SE No. S5270

PAGE
C2.40

HANGER ROD DIAMETER = ¾"	PIPING LONGITUDINAL SEISMIC CABLE BRACING SYSTEM 12"Ø PIPE MAX	KIT OPTIONS C2L

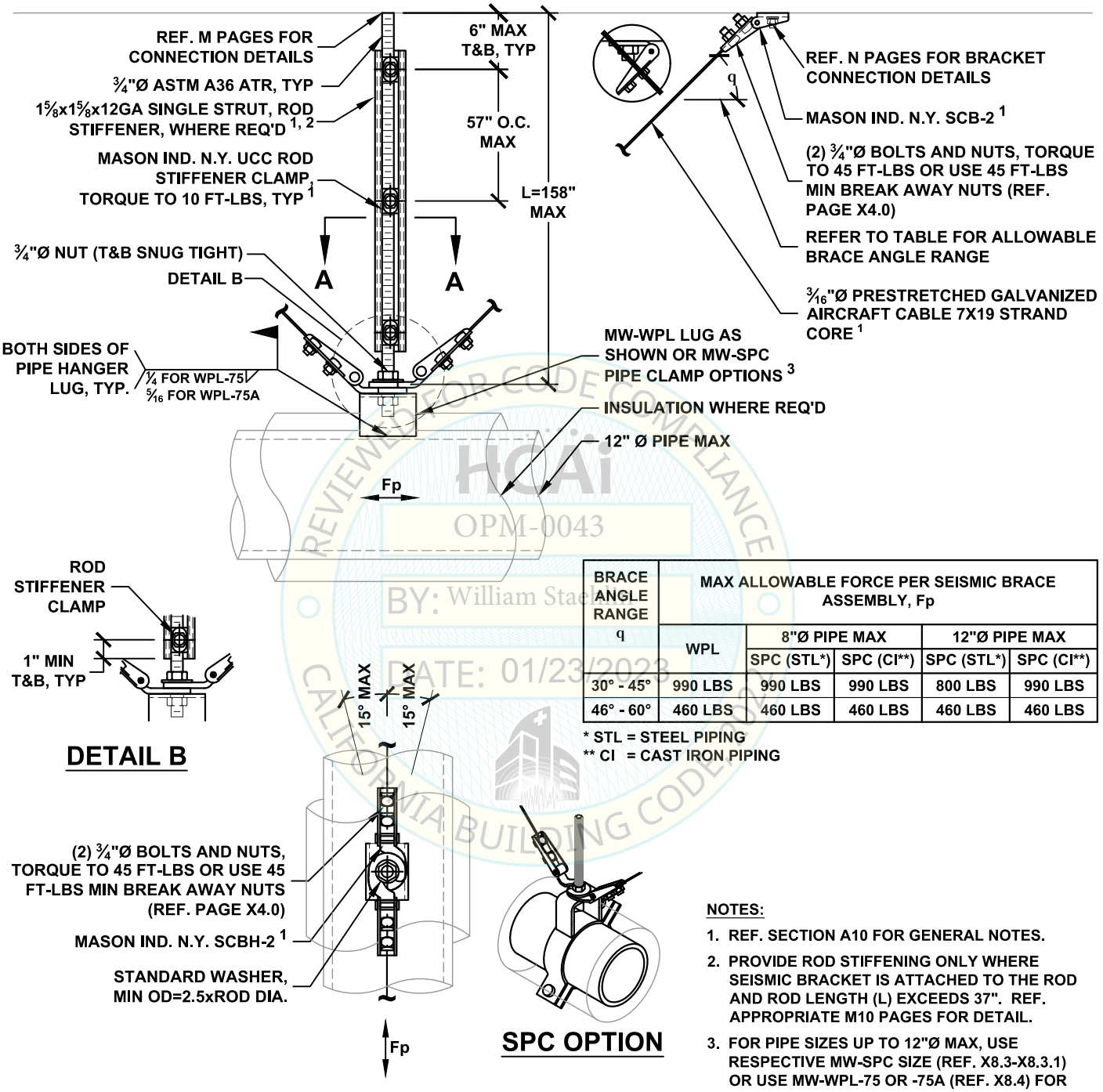

BRACE ANGLE RANGE q	MAX ALLOWABLE FORCE PER SEISMIC BRACE ASSEMBLY, Fp				
	WPL	8"Ø PIPE MAX		12"Ø PIPE MAX	
		SPC (STL*)	SPC (CI**)	SPC (STL*)	SPC (CI**)
30° - 45°	990 LBS	990 LBS	990 LBS	800 LBS	990 LBS
46° - 60°	460 LBS	460 LBS	460 LBS	460 LBS	460 LBS

* STL = STEEL PIPING
** CI = CAST IRON PIPING

NOTES:

1. REF. SECTION A10 FOR GENERAL NOTES.
2. PROVIDE ROD STIFFENING ONLY WHERE SEISMIC BRACKET IS ATTACHED TO THE ROD AND ROD LENGTH (L) EXCEEDS 37". REF. APPROPRIATE M10 PAGES FOR DETAIL.
3. FOR PIPE SIZES UP TO 12"Ø MAX, USE RESPECTIVE MW-SPC SIZE (REF. X8.3-X8.3.1) OR USE MW-WPL-75 OR -75A (REF. X8.4) FOR UP TO 8"Ø OR 12"Ø MAX, RESPECTIVELY.

HCAi
OPM-0043
BY: William Staehlin
DATE: 01/23/2023
REVIEWED FOR CODE COMPLIANCE
CALIFORNIA BUILDING CODE

MASON WEST
1601 E. Miraloma Ave. Placentia, CA 92870
TEL (714) 630 - 0701, www.masonwest.com

Jiefu "Jeff" Zhang, SE
California SE No. S5270

HANGER ROD DIAMETER = ¾"	PIPING ALL-DIRECTIONAL SEISMIC CABLE BRACING SYSTEM 12"Ø PIPE MAX	KIT OPTIONS C2A

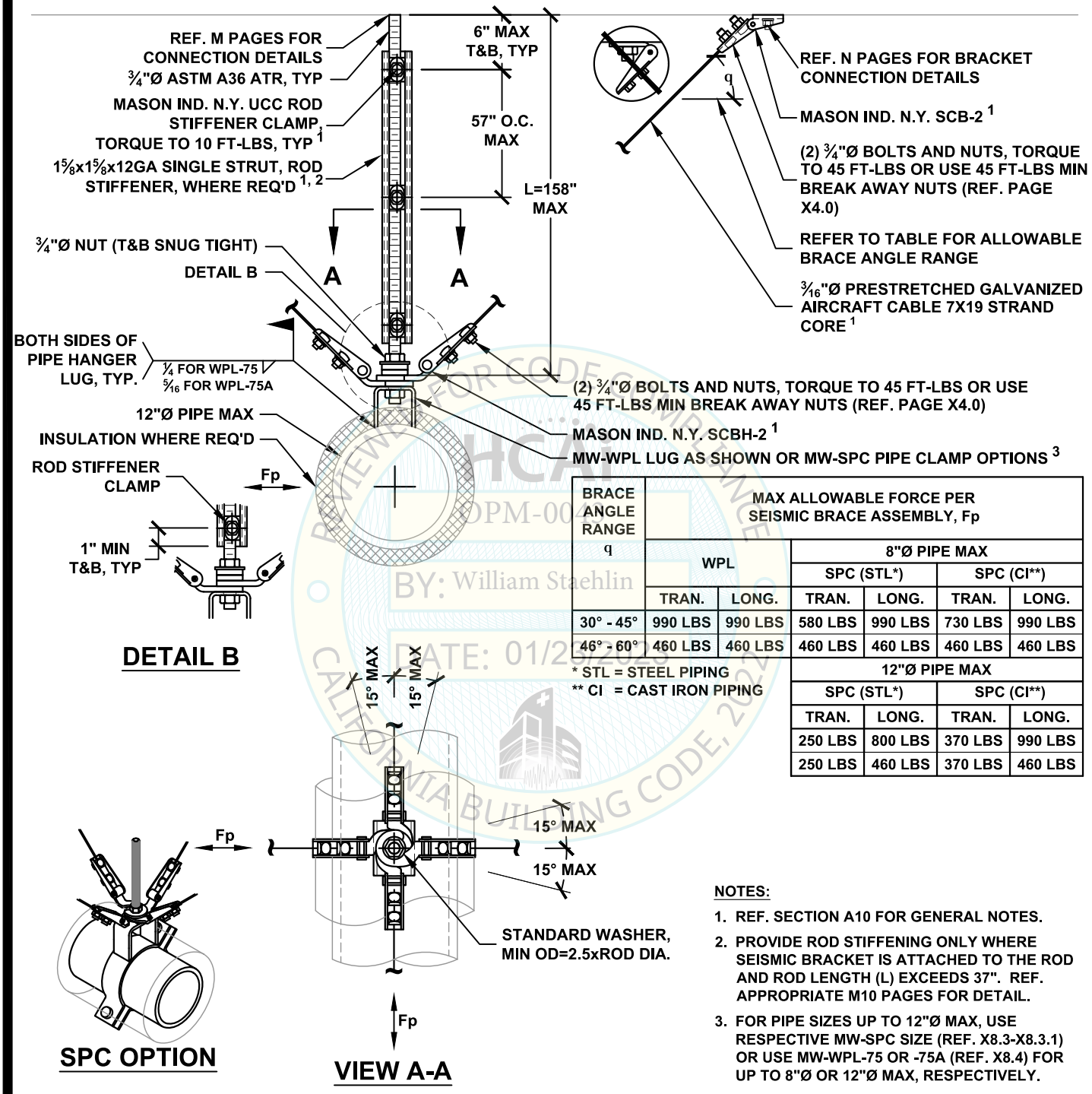

DETAIL B

BRACE ANGLE RANGE q	MAX ALLOWABLE FORCE PER SEISMIC BRACE ASSEMBLY, Fp					
	WPL		8"Ø PIPE MAX			
			SPC (STL*)		SPC (CI**)	
	TRAN.	LONG.	TRAN.	LONG.	TRAN.	LONG.
30° - 45°	990 LBS	990 LBS	580 LBS	990 LBS	730 LBS	990 LBS
46° - 60°	460 LBS	460 LBS	460 LBS	460 LBS	460 LBS	460 LBS
			12"Ø PIPE MAX			
			SPC (STL*)		SPC (CI**)	
			TRAN.	LONG.	TRAN.	LONG.
			250 LBS	800 LBS	370 LBS	990 LBS
			250 LBS	460 LBS	370 LBS	460 LBS

* STL = STEEL PIPING
** CI = CAST IRON PIPING

SPC OPTION

VIEW A-A

NOTES:

1. REF. SECTION A10 FOR GENERAL NOTES.
2. PROVIDE ROD STIFFENING ONLY WHERE SEISMIC BRACKET IS ATTACHED TO THE ROD AND ROD LENGTH (L) EXCEEDS 37". REF. APPROPRIATE M10 PAGES FOR DETAIL.
3. FOR PIPE SIZES UP TO 12"Ø MAX, USE RESPECTIVE MW-SPC SIZE (REF. X8.3-X8.3.1) OR USE MW-WPL-75 OR -75A (REF. X8.4) FOR UP TO 8"Ø OR 12"Ø MAX, RESPECTIVELY.

REVIEWED FOR CODE COMPLIANCE
OPM-0043
BY: William Staehlin
DATE: 01/23/2023
CALIFORNIA BUILDING CODE, 2022

MASON WEST
1601 E. Miraloma Ave. Placentia, CA 92870
TEL (714) 630 - 0701, www.masonwest.com

Jiefu "Jeff" Zhang, SE
California SE No. S5270

PAGE
C2.42

HANGER ROD DIAMETER = 7/8"	PIPING TRANSVERSE SEISMIC CABLE BRACING SYSTEM 12"Ø PIPE MAX	KIT OPTIONS C2T

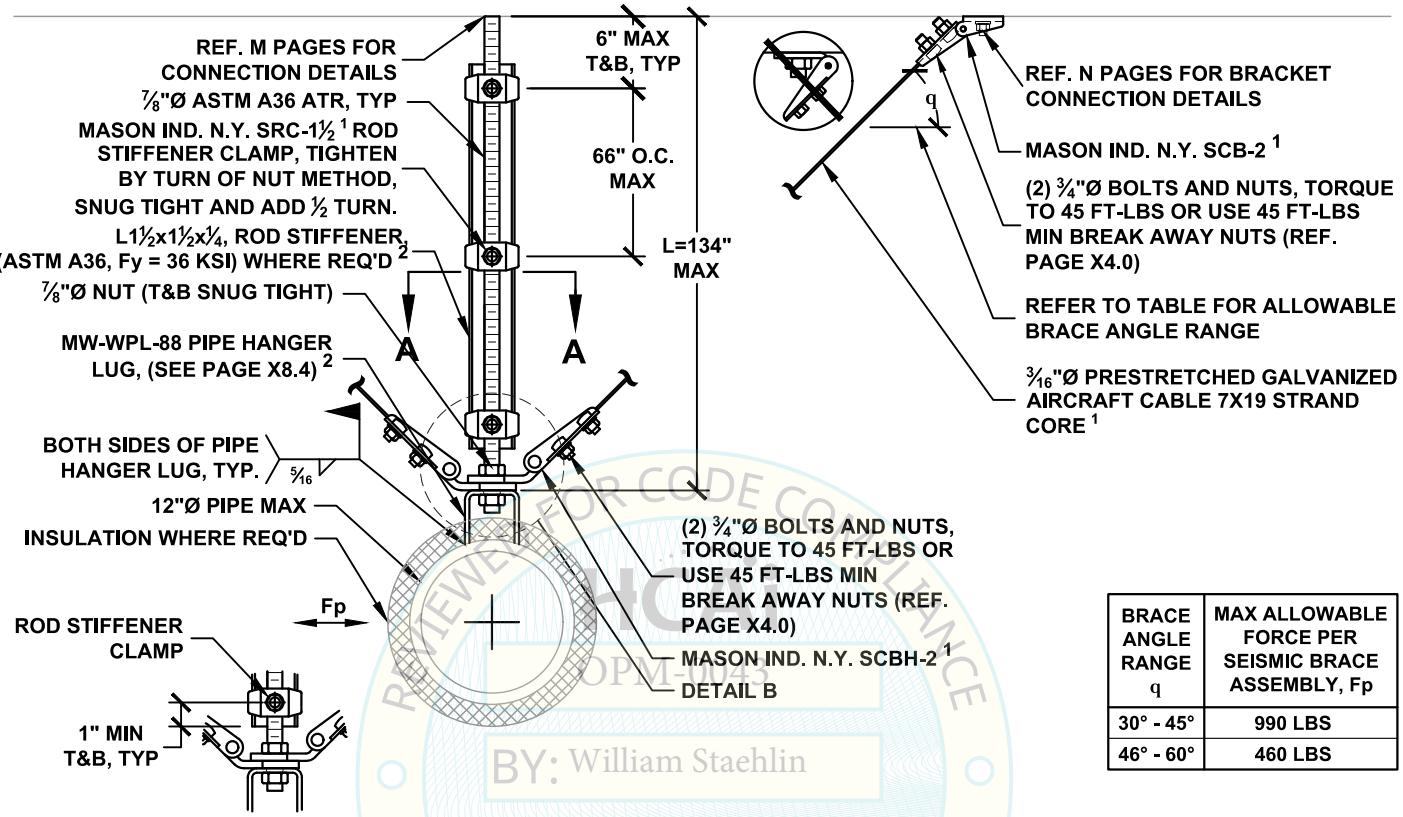

DETAIL B

BRACE ANGLE RANGE q	MAX ALLOWABLE FORCE PER SEISMIC BRACE ASSEMBLY, Fp
30° - 45°	990 LBS
46° - 60°	460 LBS

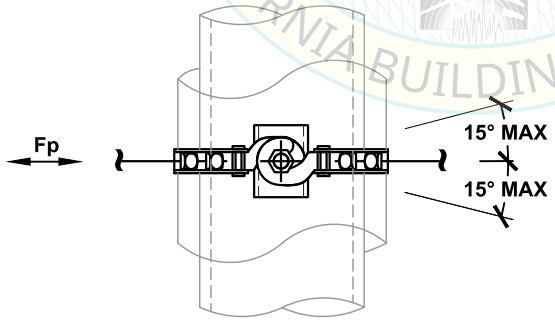

VIEW A-A

REVIEWED FOR CODE COMPLIANCE
CALIFORNIA BUILDING CODE, 2022
OPM-0043
BY: William Staehlin
DATE: 01/23/2023

NOTES:

1. REF. SECTION A10 FOR GENERAL NOTES.
2. PROVIDE ROD STIFFENER ONLY WHERE SEISMIC BRACKET IS ATTACHED TO THE ROD AND ROD LENGTH (L) EXCEEDS 43". REF. APPROPRIATE M10 PAGES FOR DETAILS.
3. REF. SECTION A15 FOR ALTERNATE ARRANGEMENTS OF SEISMIC BRACES.

MASON WEST
1601 E. Miraloma Ave. Placentia, CA 92870
TEL (714) 630 - 0701, www.masonwest.com

Jiefu "Jeff" Zhang, SE
California SE No. S5270

HANGER ROD DIAMETER = 7/8"	PIPING LONGITUDINAL SEISMIC CABLE BRACING SYSTEM 12"Ø PIPE MAX	KIT OPTIONS C2L

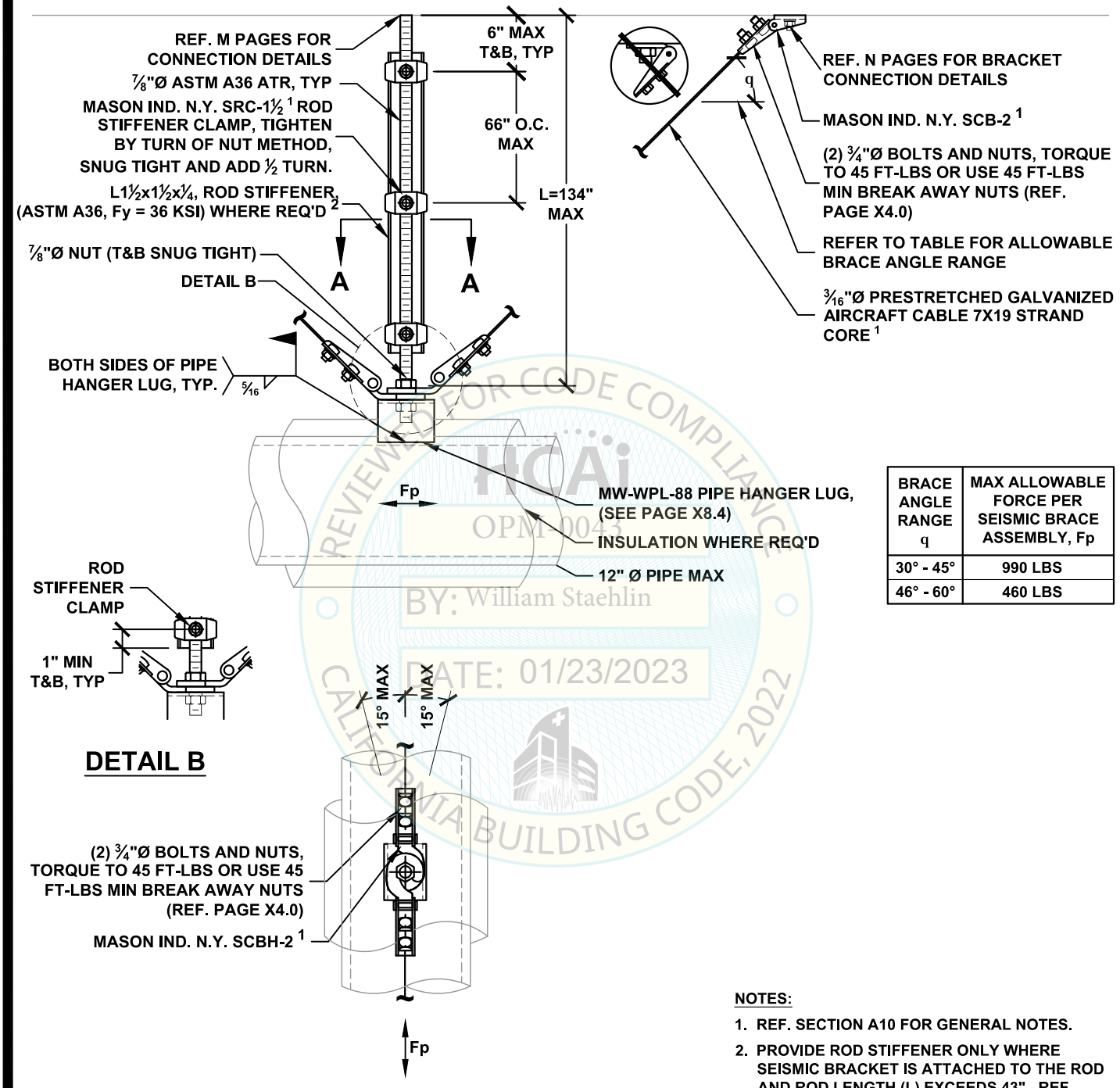

BRACE ANGLE RANGE q	MAX ALLOWABLE FORCE PER SEISMIC BRACE ASSEMBLY, Fp
30° - 45°	990 LBS
46° - 60°	460 LBS

DETAIL B

VIEW A-A

NOTES:

1. REF. SECTION A10 FOR GENERAL NOTES.
2. PROVIDE ROD STIFFENER ONLY WHERE SEISMIC BRACKET IS ATTACHED TO THE ROD AND ROD LENGTH (L) EXCEEDS 43". REF. APPROPRIATE M10 PAGES FOR DETAILS..

HCAi
REVIEWED FOR CODE COMPLIANCE
OPM-0043
BY: William Staehlin
DATE: 01/23/2023
CALIFORNIA BUILDING CODE, 2022

MASON WEST
1601 E. Miraloma Ave. Placentia, CA 92870
TEL (714) 630 - 0701, www.masonwest.com

Jiefu "Jeff" Zhang, SE
California SE No. S5270

PAGE
C2.51

HANGER ROD DIAMETER = 7/8"	PIPING ALL-DIRECTIONAL SEISMIC CABLE BRACING SYSTEM 12"Ø PIPE MAX	KIT OPTIONS C2A

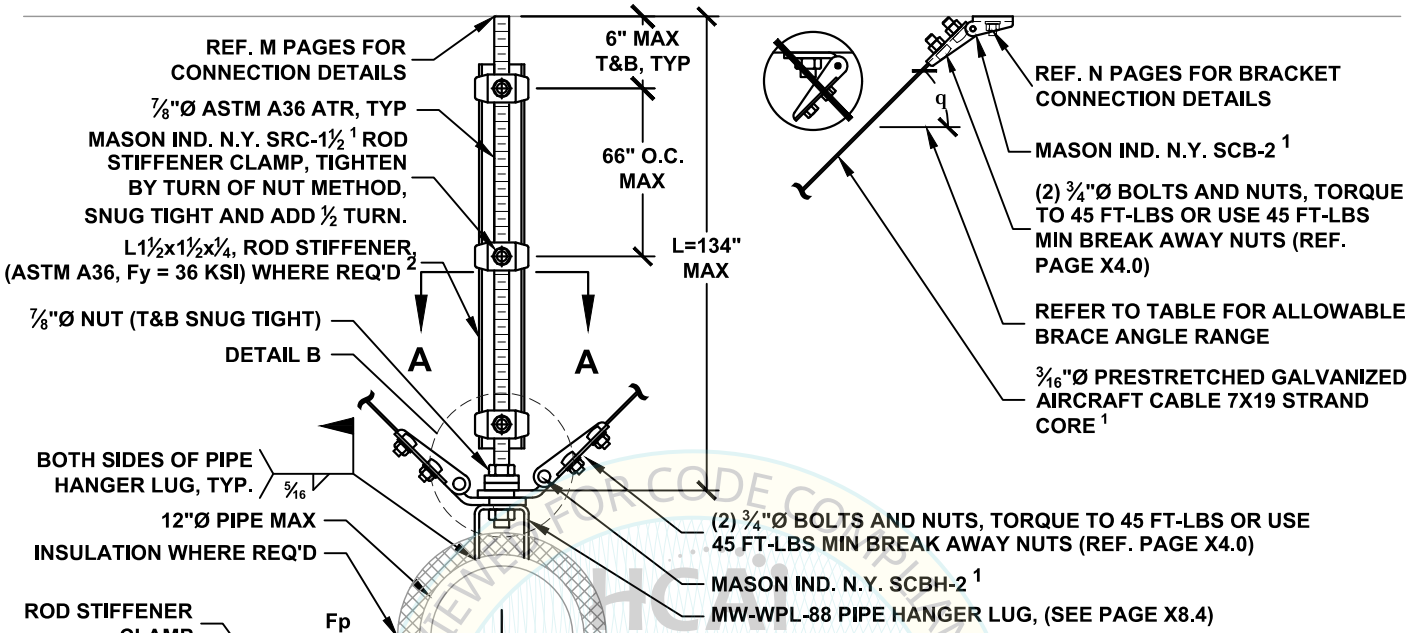

DETAIL B

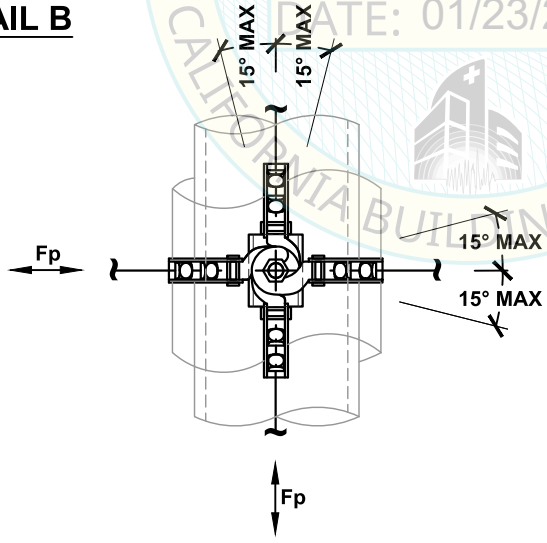

VIEW A-A

BRACE ANGLE RANGE q	MAX ALLOWABLE FORCE PER SEISMIC BRACE ASSEMBLY, Fp	
	TRAN.	LONG.
30° - 45°	990 LBS	990 LBS
46° - 60°	460 LBS	460 LBS

REVIEWED FOR CODE COMPLIANCE
OPM-0043
BY: William Staehlin
DATE: 01/23/2023
CALIFORNIA BUILDING CODE, 2022

NOTES:

1. REF. SECTION A10 FOR GENERAL NOTES.
2. PROVIDE ROD STIFFENER ONLY WHERE SEISMIC BRACKET IS ATTACHED TO THE ROD AND ROD LENGTH (L) EXCEEDS 43". REF. APPROPRIATE M10 PAGES FOR DETAILS.

MASON WEST
1601 E. Miraloma Ave. Placentia, CA 92870
TEL (714) 630 - 0701, www.masonwest.com

Jiefu "Jeff" Zhang, SE
California SE No. S5270

PAGE
C2.52

HANGER ROD DIAMETER = ⅜"

PIPING/CONDUIT TRANSVERSE SEISMIC SOLID BRACING SYSTEM 2"Ø PIPE/CONDUIT MAX

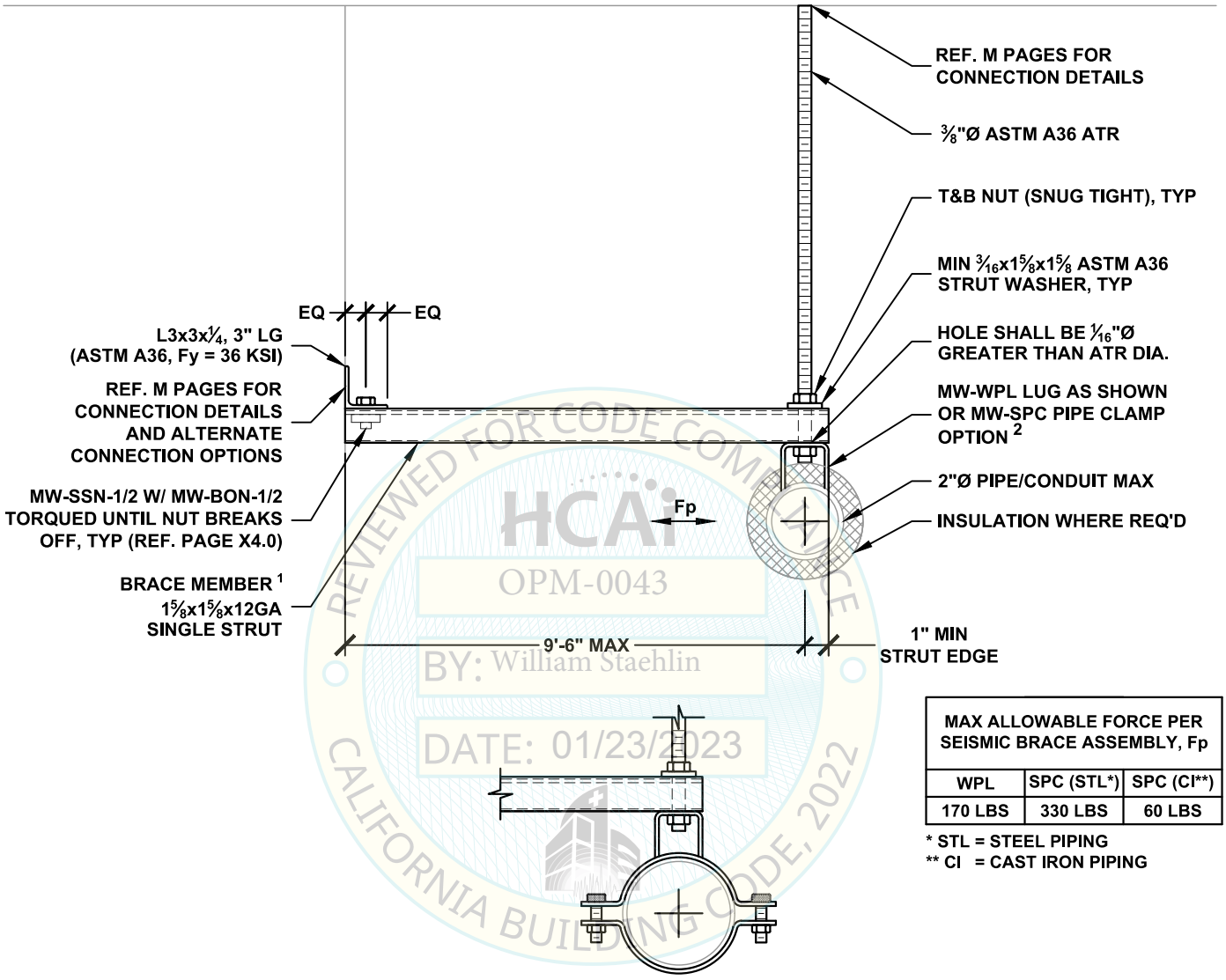

MAX ALLOWABLE FORCE PER SEISMIC BRACE ASSEMBLY, Fp		
WPL	SPC (STL*)	SPC (CI**)
170 LBS	330 LBS	60 LBS

* STL = STEEL PIPING
** CI = CAST IRON PIPING

SPC OPTION

NOTES:

1. BRACE MEMBER MAY BE PROVIDED WITH ROUND HOLES SIZED FOR HANGER RODS. REF. X7.0 & X7.1 FOR STRUT MEMBER DATA.
2. FOR PIPE/CONDUIT SIZES UP TO 2"Ø MAX, USE RESPECTIVE MW-SPC SIZE (REF. X8.3-X8.3.1) OR USE MW-WPL-38 (REF. X8.4).

REVIEWED FOR CODE COMPLIANCE
HCAI
OPM-0043
BY: William Staehlin
DATE: 01/23/2023
CALIFORNIA BUILDING CODE, 2022

MASON WEST
1601 E. Miraloma Ave. Placentia, CA 92870
TEL (714) 630 - 0701, www.masonwest.com

Jiefu "Jeff" Zhang, SE
California SE No. S5270

PAGE
C3.10

HANGER ROD DIAMETER = ½"	PIPING/CONDUIT TRANSVERSE SEISMIC SOLID BRACING SYSTEM 3"Ø PIPE/CONDUIT MAX	

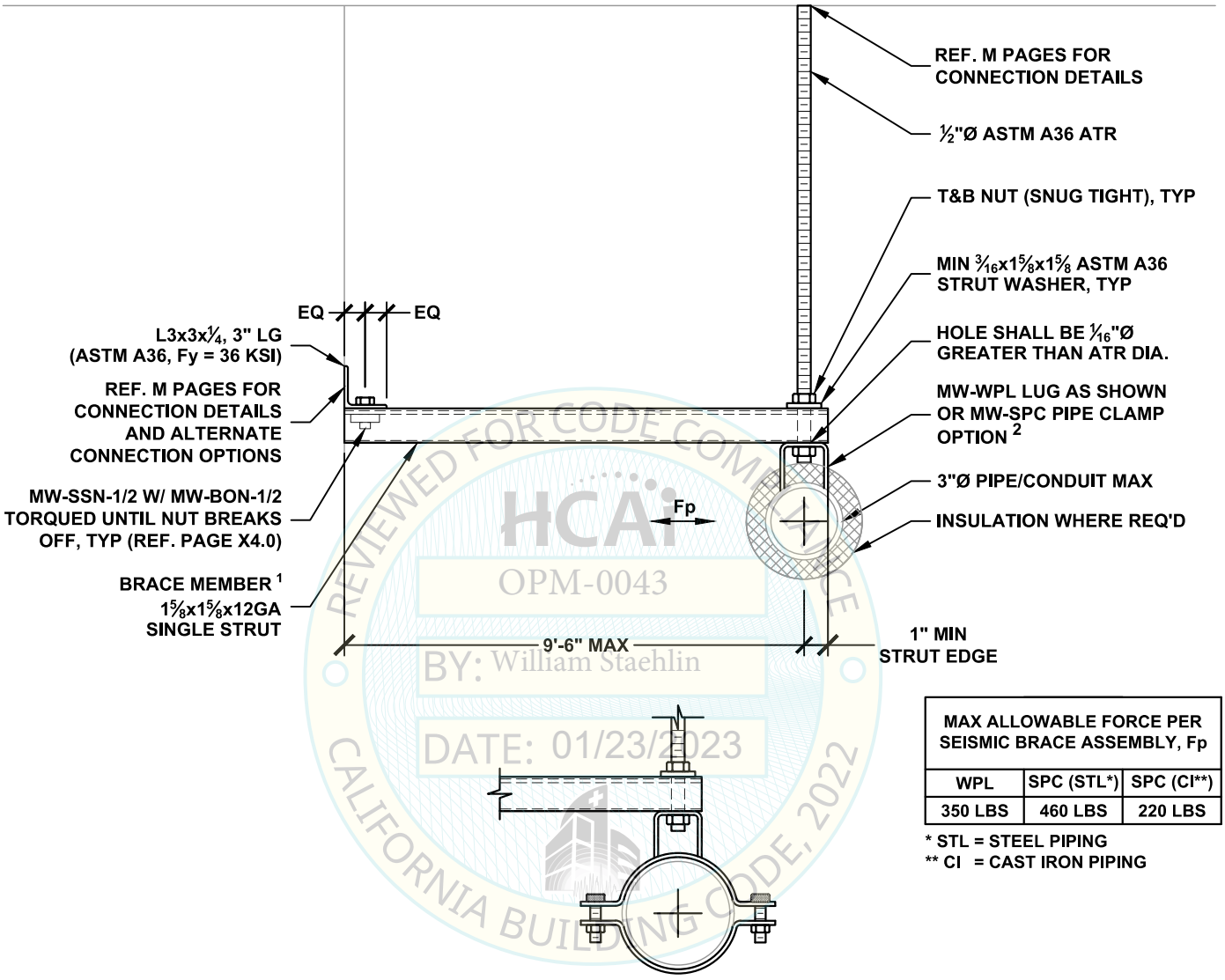

MAX ALLOWABLE FORCE PER SEISMIC BRACE ASSEMBLY, Fp		
WPL	SPC (STL*)	SPC (CI**)
350 LBS	460 LBS	220 LBS

* STL = STEEL PIPING
** CI = CAST IRON PIPING

REVIEWED FOR CODE COMPLIANCE
HCAi
OPM-0043
BY: William Staehlin
DATE: 01/23/2023
CALIFORNIA BUILDING CODE, 2022

SPC OPTION

NOTES:

1. BRACE MEMBER MAY BE PROVIDED WITH ROUND HOLES SIZED FOR HANGER RODS. REF. X7.0 & X7.1 FOR STRUT MEMBER DATA.
2. FOR PIPE/CONDUIT SIZES UP TO 3"Ø MAX, USE RESPECTIVE MW-SPC SIZE (REF. X8.3-X8.3.1) OR USE MW-WPL-50 (REF. X8.4).

MASON WEST
1601 E. Miraloma Ave. Placentia, CA 92870
TEL (714) 630 - 0701, www.masonwest.com

Jiefu "Jeff" Zhang, SE
California SE No. S5270

PAGE
C3.20

HANGER ROD DIAMETER = 5/8"	PIPING/CONDUIT TRANSVERSE SEISMIC SOLID BRACING SYSTEM 5"Ø PIPE/CONDUIT MAX	

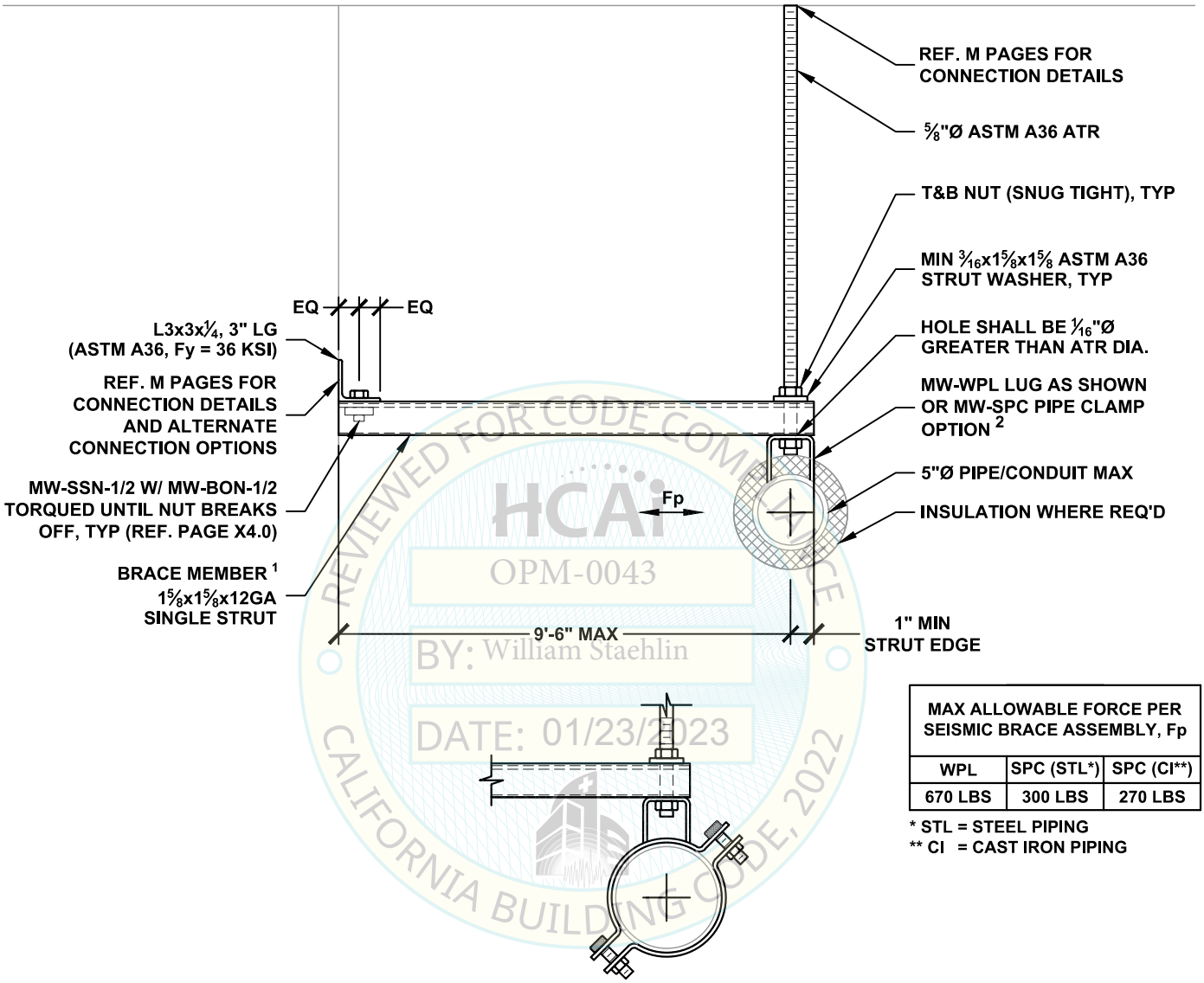

MAX ALLOWABLE FORCE PER SEISMIC BRACE ASSEMBLY, Fp		
WPL	SPC (STL*)	SPC (CI**)
670 LBS	300 LBS	270 LBS

* STL = STEEL PIPING
** CI = CAST IRON PIPING

SPC OPTION

NOTES:

1. BRACE MEMBER MAY BE PROVIDED WITH ROUND HOLES SIZED FOR HANGER RODS. REF. X7.0 & X7.1 FOR STRUT MEMBER DATA.
2. FOR PIPE/CONDUIT SIZES UP TO 5"Ø MAX, USE RESPECTIVE MW-SPC SIZE (REF. X8.3-X8.3.1) OR USE MW-WPL-63 (REF. X8.4).

REVIEWED FOR CODE COMPLIANCE
HCAi
OPM-0043
BY: William Staehlin
DATE: 01/23/2023
CALIFORNIA BUILDING CODE, 2022

MASON WEST
1601 E. Miraloma Ave. Placentia, CA 92870
TEL (714) 630 - 0701, www.masonwest.com

Jiefu "Jeff" Zhang, SE
California SE No. S5270

PAGE
C3.30

HANGER ROD DIAMETER = 3/8"

RECTANGULAR DUCT TRANSVERSE SEISMIC SOLID BRACING SYSTEM 30 PLF MAX

KIT OPTIONS
TS12T
TS1220T
TSH312T
TSH320T

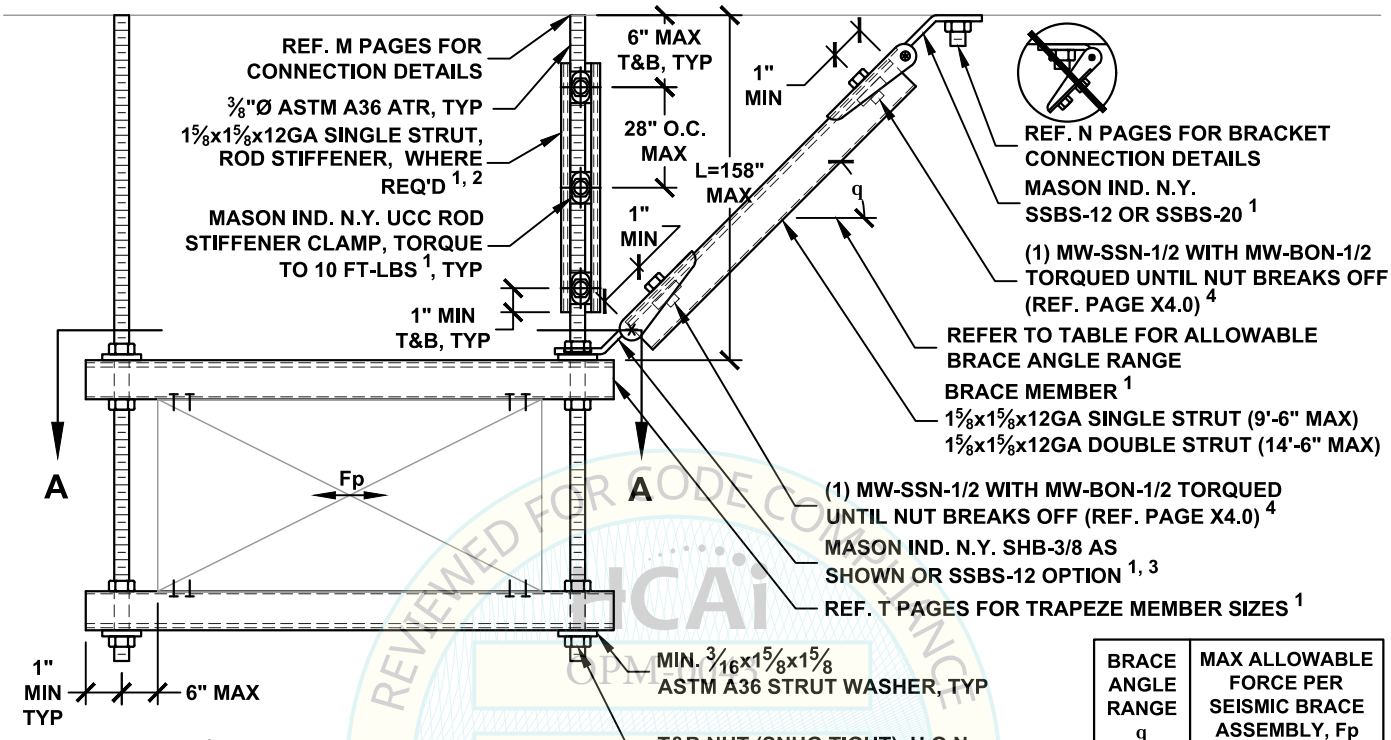

BRACE ANGLE RANGE q	MAX ALLOWABLE FORCE PER SEISMIC BRACE ASSEMBLY, Fp
30° - 45°	425 LBS
46° - 60°	245 LBS

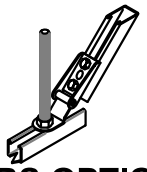

SSBS OPTION

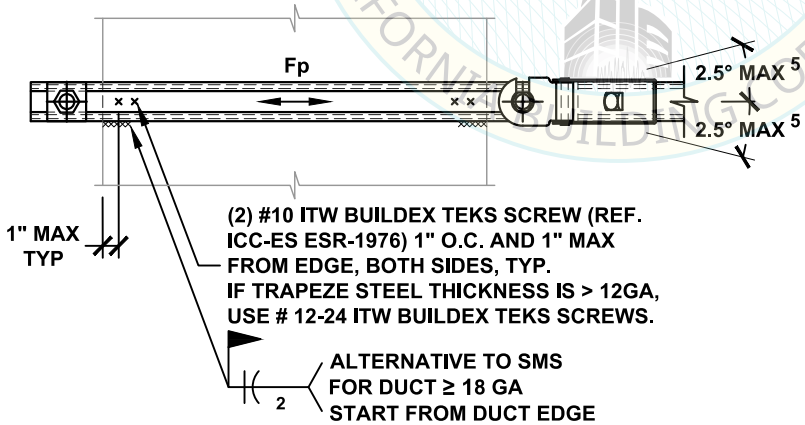

VIEW A-A

NOTES:

1. REF. SECTION A1 FOR GENERAL NOTES.
2. PROVIDE ROD STIFFENER ONLY WHERE SEISMIC BRACKET IS ATTACHED TO THE ROD AND ROD LENGTH (L) EXCEEDS 18". REF. APPROPRIATE M10 PAGES FOR DETAIL.
3. REF. PAGE A6.0 - A6.2 FOR ALTERNATE ARRANGEMENTS OF SEISMIC BRACES AND ANGLE OR HSS MEMBER AS TRAPEZE.
4. PROVIDE (1) 1/2" DIA. CONNECTION IN CENTER HOLE WHEN STRUT BRACE IS INSTALLED INSIDE THE BRACKET AND (2) 1/2" DIA. CONNECTIONS IN (2) OUTER HOLES WHEN THE BRACE IS INSTALLED OUTSIDE OF THE BRACKET. REF. X2.3 FOR CONNECTION DETAILS.
5. ANGLE MAY BE INCREASED UP TO 15°, REF. PAGE A5.0.

REVIEWED FOR CODE COMPLIANCE
HCAi
OPM-0043
BY: William Staehlin
DATE: 01/23/2023
CALIFORNIA BUILDING CODE 2022

MASON WEST
1601 E. Miraloma Ave. Placentia, CA 92870
TEL (714) 630 - 0701, www.masonwest.com

Jiefu "Jeff" Zhang, SE
California SE No. S5270

PAGE
D1.10

HANGER ROD DIAMETER = 3/8"	RECTANGULAR DUCT LONGITUDINAL SEISMIC SOLID BRACING SYSTEM 30 PLF MAX	KIT OPTIONS TS12L TS1220L TSH312L TSH320L

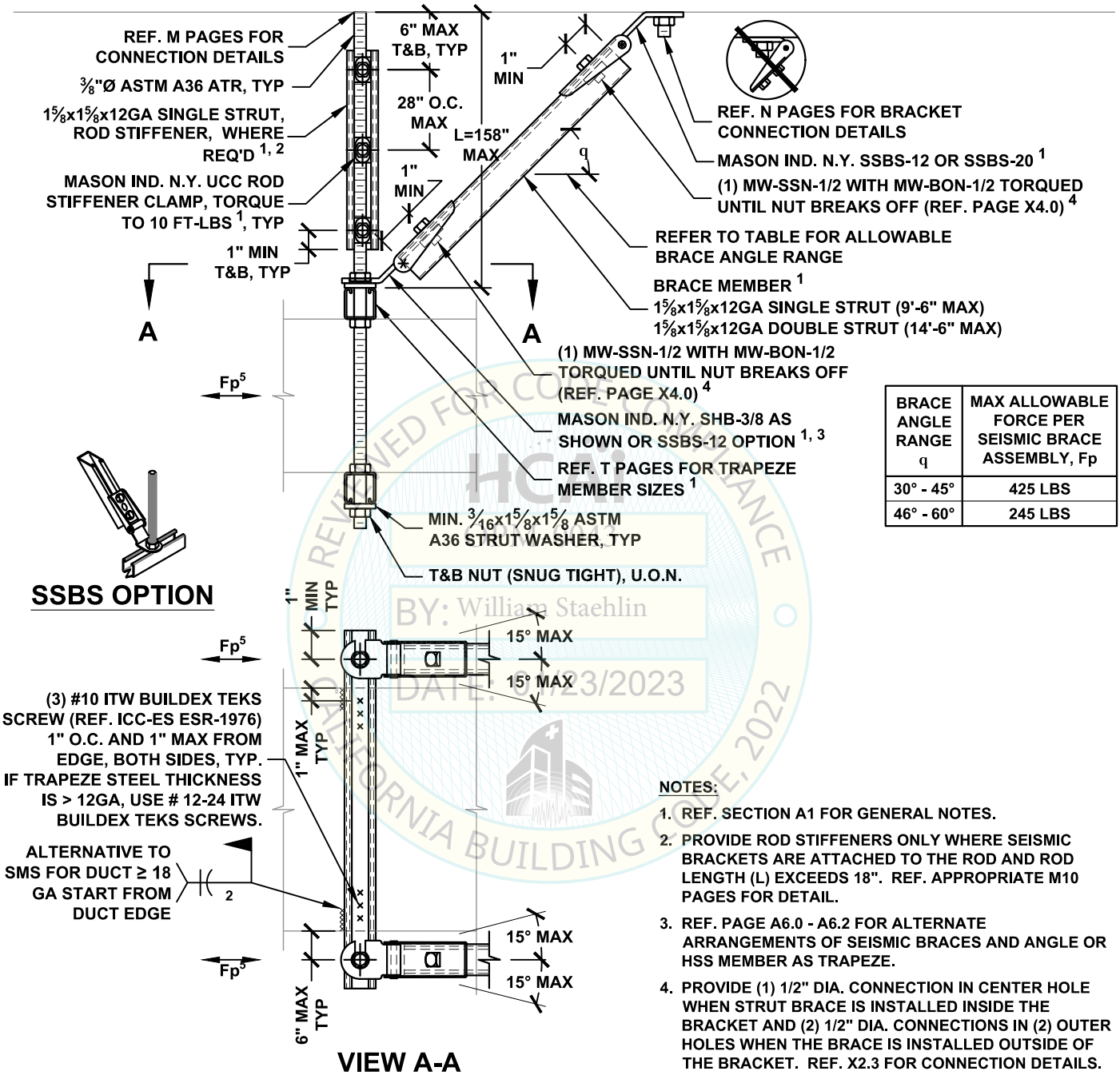

BRACE ANGLE RANGE q	MAX ALLOWABLE FORCE PER SEISMIC BRACE ASSEMBLY, Fp
30° - 45°	425 LBS
46° - 60°	245 LBS

REVIEWED FOR CODE COMPLIANCE
HCAI
BY: William Staehlin
DATE: 1/23/2023
CALIFORNIA BUILDING CODE, 2022

NOTES:

1. REF. SECTION A1 FOR GENERAL NOTES.
2. PROVIDE ROD STIFFENERS ONLY WHERE SEISMIC BRACKETS ARE ATTACHED TO THE ROD AND ROD LENGTH (L) EXCEEDS 18". REF. APPROPRIATE M10 PAGES FOR DETAIL.
3. REF. PAGE A6.0 - A6.2 FOR ALTERNATE ARRANGEMENTS OF SEISMIC BRACES AND ANGLE OR HSS MEMBER AS TRAPEZE.
4. PROVIDE (1) 1/2" DIA. CONNECTION IN CENTER HOLE WHEN STRUT BRACE IS INSTALLED INSIDE THE BRACKET AND (2) 1/2" DIA. CONNECTIONS IN (2) OUTER HOLES WHEN THE BRACE IS INSTALLED OUTSIDE OF THE BRACKET. REF. X2.3 FOR CONNECTION DETAILS.
5. DESIGN PROFESSIONAL SHALL CONSIDER ECCENTRIC LOAD DISTRIBUTION WHEN DETERMINING THE Fp VALUE USED IN DESIGN.

MASON WEST
1601 E. Miraloma Ave. Placentia, CA 92870
TEL (714) 630 - 0701, www.masonwest.com

Jiefu "Jeff" Zhang, SE
California SE No. S5270

PAGE
D1.11

HANGER ROD DIAMETER = 3/8"	RECTANGULAR DUCT ALL-DIRECTIONAL SEISMIC SOLID BRACING SYSTEM 30 PLF MAX	KIT OPTIONS TS12A TS1220A TSH312A TSH320A

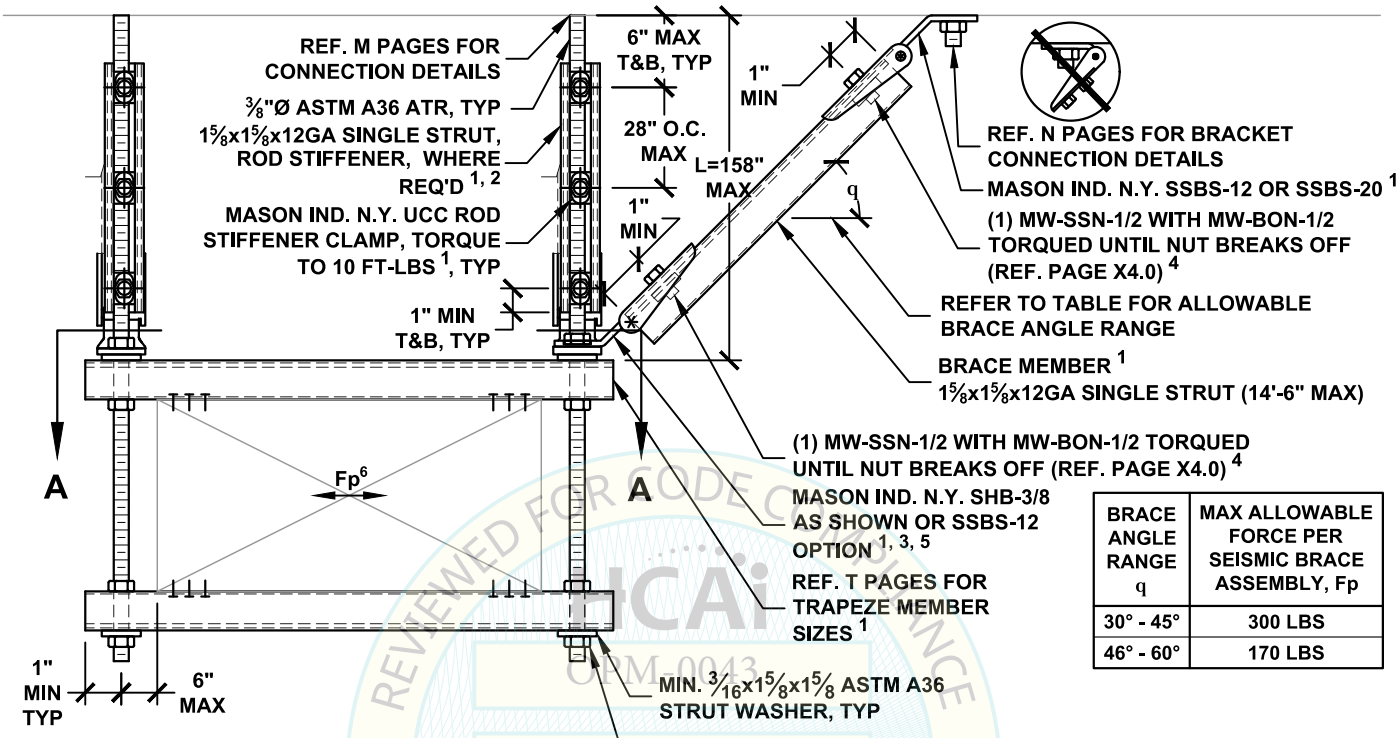

BRACE ANGLE RANGE q	MAX ALLOWABLE FORCE PER SEISMIC BRACE ASSEMBLY, Fp
30° - 45°	300 LBS
46° - 60°	170 LBS

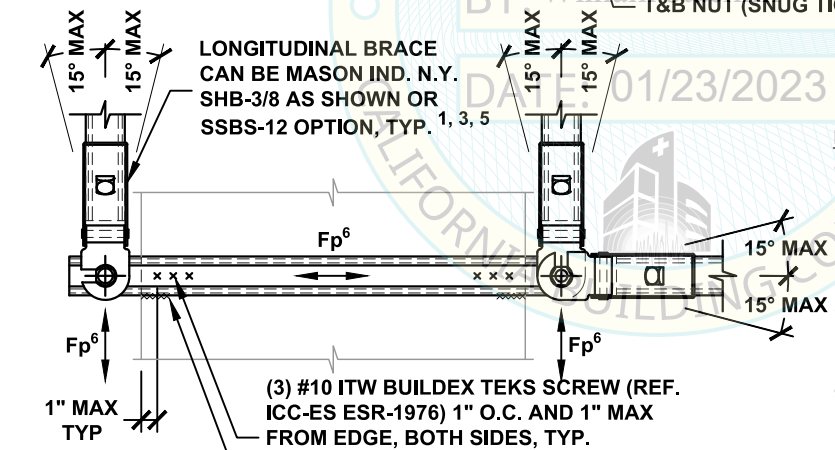

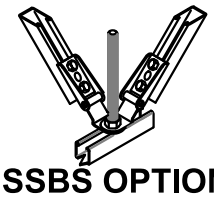

SSBS OPTION

VIEW A-A

NOTES:

1. REF. SECTION A1 FOR GENERAL NOTES.
2. PROVIDE ROD STIFFENERS ONLY WHERE SEISMIC BRACKETS ARE ATTACHED TO THE ROD AND ROD LENGTH (L) EXCEEDS 18". REF. APPROPRIATE M10 PAGES FOR DETAIL.
3. REF. PAGE A6.0 - A6.2 FOR ALTERNATE ARRANGEMENTS OF SEISMIC BRACES AND ANGLE OR HSS MEMBER AS TRAPEZE.
4. PROVIDE (1) 1/2" DIA. CONNECTION IN CENTER HOLE WHEN STRUT BRACE IS INSTALLED INSIDE THE BRACKET AND (2) 1/2" DIA. CONNECTIONS IN (2) OUTER HOLES WHEN THE BRACE IS INSTALLED OUTSIDE OF THE BRACKET. REF. X2.3 FOR CONNECTION DETAILS.
5. MW-KY-38 (REF. X2.4) MUST BE USED ON TOP OF BOTTOM SHB WHEN STACKING (2) SHB ON THE SAME ROD.
6. DESIGN PROFESSIONAL SHALL CONSIDER ECCENTRIC LOAD DISTRIBUTION WHEN DETERMINING THE Fp VALUE USED IN DESIGN.

REVIEWED FOR CODE COMPLIANCE
HCAi
OPM-0043
BY: William Staehlin
DATE: 01/23/2023
CALIFORNIA BUILDING CODE 2022

MASON WEST
1601 E. Miraloma Ave. Placentia, CA 92870
TEL (714) 630 - 0701, www.masonwest.com

Jiefu "Jeff" Zhang, SE
California SE No. S5270

PAGE
D1.12

HANGER ROD DIAMETER = ½"	RECTANGULAR DUCT TRANSVERSE SEISMIC SOLID BRACING SYSTEM 60 PLF MAX	KIT OPTIONS TS12T TS1220T TSH412T TSH420T

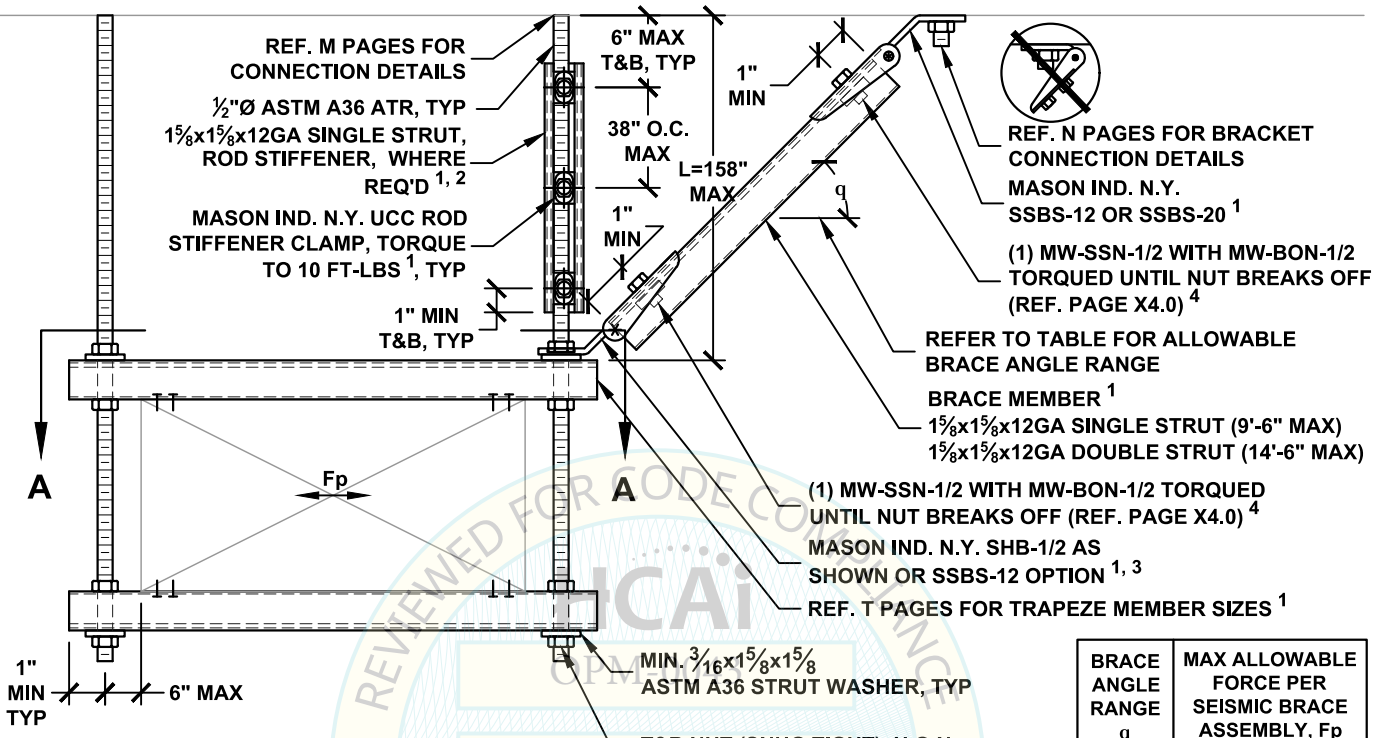

BRACE ANGLE RANGE q	MAX ALLOWABLE FORCE PER SEISMIC BRACE ASSEMBLY, Fp
30° - 45°	580 LBS
46° - 60°	410 LBS

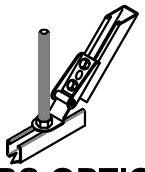

SSBS OPTION

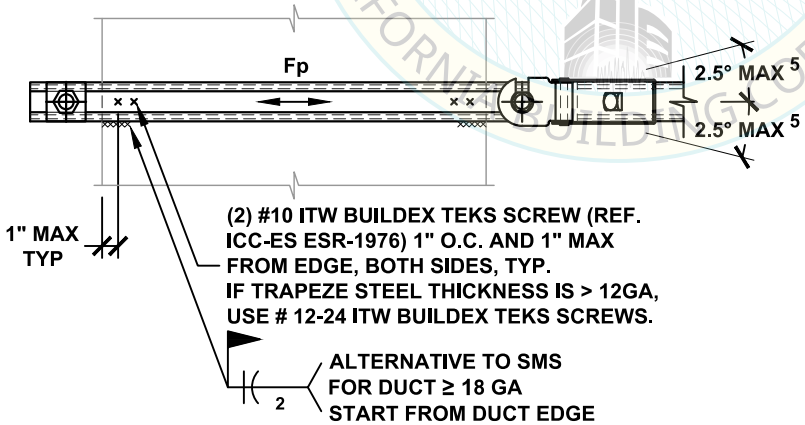

VIEW A-A

NOTES:

1. REF. SECTION A1 FOR GENERAL NOTES.
2. PROVIDE ROD STIFFENER ONLY WHERE SEISMIC BRACKET IS ATTACHED TO THE ROD AND ROD LENGTH (L) EXCEEDS 25". REF. APPROPRIATE M10 PAGES FOR DETAIL.
3. REF. PAGE A6.0 - A6.2 FOR ALTERNATE ARRANGEMENTS OF SEISMIC BRACES AND ANGLE OR HSS MEMBER AS TRAPEZE.
4. PROVIDE (1) 1/2" DIA. CONNECTION IN CENTER HOLE WHEN STRUT BRACE IS INSTALLED INSIDE THE BRACKET AND (2) 1/2" DIA. CONNECTIONS IN (2) OUTER HOLES WHEN THE BRACE IS INSTALLED OUTSIDE OF THE BRACKET. REF. X2.3 FOR CONNECTION DETAILS.
5. ANGLE MAY BE INCREASED UP TO 15°, REF. PAGE A5.0.

REVIEWED FOR CODE COMPLIANCE
OPM-0043
BY: William Staehlin
DATE: 01/23/2023
CALIFORNIA BUILDING CODE 2022

MASON WEST
1601 E. Miraloma Ave. Placentia, CA 92870
TEL (714) 630 - 0701, www.masonwest.com

Jiefu "Jeff" Zhang, SE
California SE No. S5270

PAGE
D1.20

HANGER ROD DIAMETER = ½"

RECTANGULAR DUCT LONGITUDINAL SEISMIC SOLID BRACING SYSTEM 60 PLF MAX

KIT OPTIONS
TS12L
TS1220L
TSH412L
TSH420L

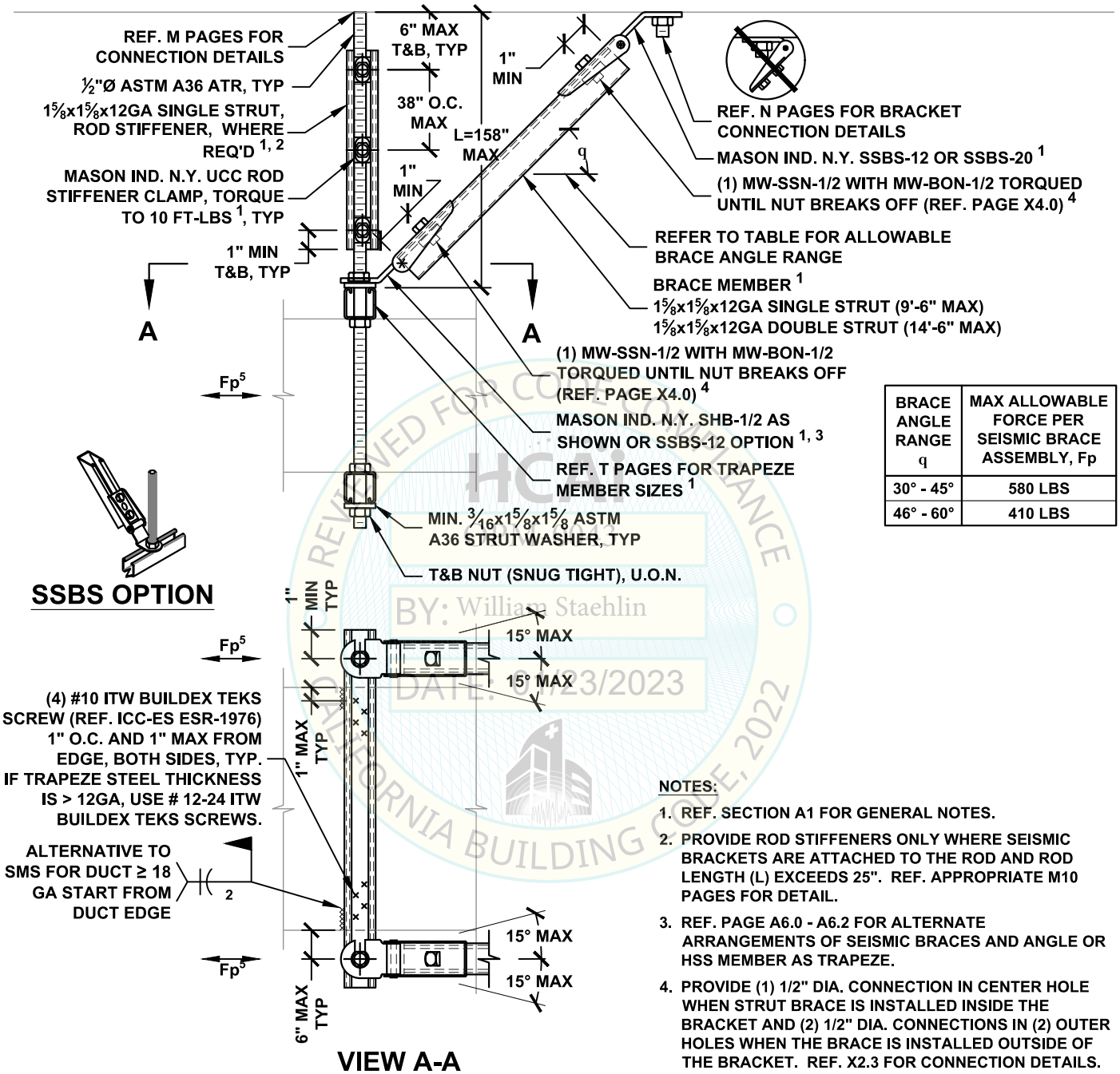

BRACE ANGLE RANGE q	MAX ALLOWABLE FORCE PER SEISMIC BRACE ASSEMBLY, Fp
30° - 45°	580 LBS
46° - 60°	410 LBS

SSBS OPTION

VIEW A-A

NOTES:

1. REF. SECTION A1 FOR GENERAL NOTES.
2. PROVIDE ROD STIFFENERS ONLY WHERE SEISMIC BRACKETS ARE ATTACHED TO THE ROD AND ROD LENGTH (L) EXCEEDS 25". REF. APPROPRIATE M10 PAGES FOR DETAIL.
3. REF. PAGE A6.0 - A6.2 FOR ALTERNATE ARRANGEMENTS OF SEISMIC BRACES AND ANGLE OR HSS MEMBER AS TRAPEZE.
4. PROVIDE (1) 1/2" DIA. CONNECTION IN CENTER HOLE WHEN STRUT BRACE IS INSTALLED INSIDE THE BRACKET AND (2) 1/2" DIA. CONNECTIONS IN (2) OUTER HOLES WHEN THE BRACE IS INSTALLED OUTSIDE OF THE BRACKET. REF. X2.3 FOR CONNECTION DETAILS.
5. DESIGN PROFESSIONAL SHALL CONSIDER ECCENTRIC LOAD DISTRIBUTION WHEN DETERMINING THE Fp VALUE USED IN DESIGN.

REVIEWED FOR CODE COMPLIANCE
HCAI
BY: William Staehlin
DATE: 1/23/2023
CALIFORNIA BUILDING CODE, 2022

MASON WEST
1601 E. Miraloma Ave. Placentia, CA 92870
TEL (714) 630 - 0701, www.masonwest.com

Jiefu "Jeff" Zhang, SE
California SE No. S5270

PAGE
D1.21

HANGER ROD DIAMETER = ½"

RECTANGULAR DUCT ALL-DIRECTIONAL SEISMIC SOLID BRACING SYSTEM 60 PLF MAX

KIT OPTIONS
TS12A
TS1220A
TSH412A
TSH420A

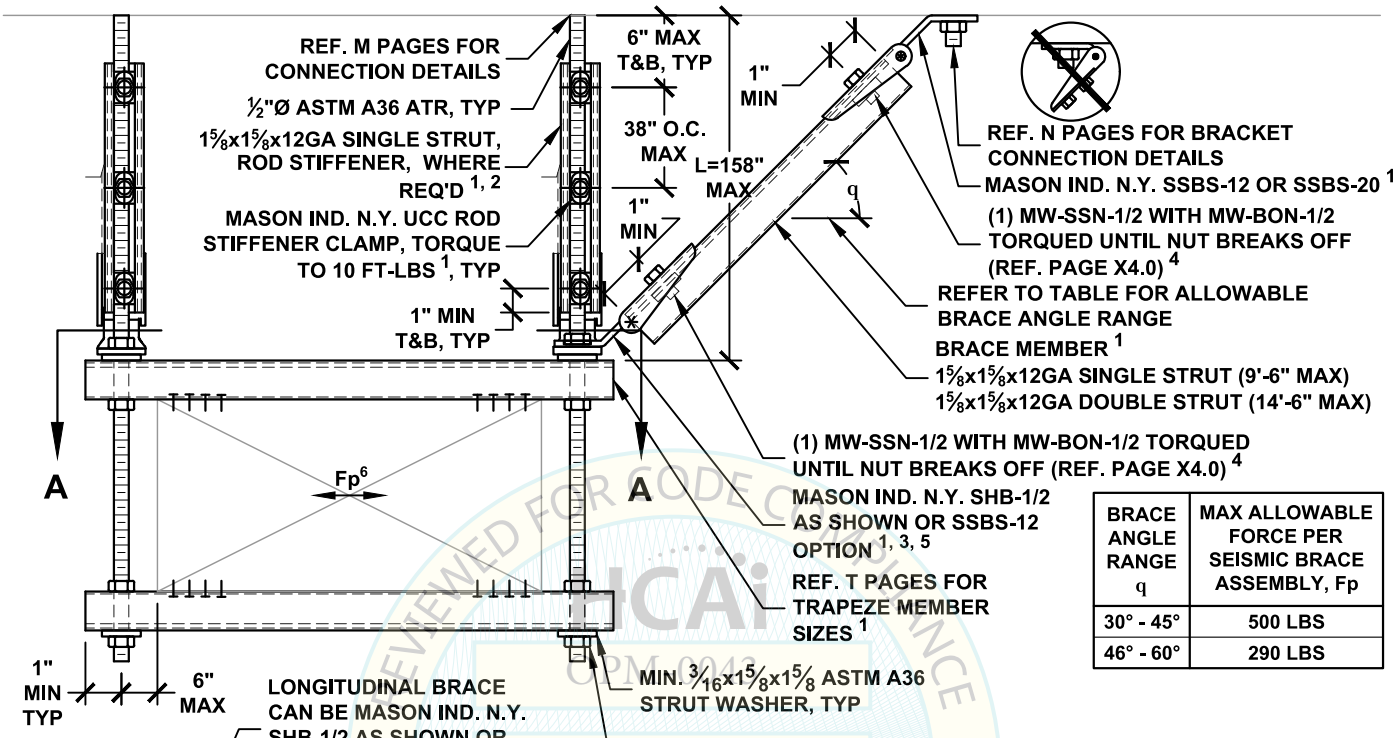

BRACE ANGLE RANGE q	MAX ALLOWABLE FORCE PER SEISMIC BRACE ASSEMBLY, Fp
30° - 45°	500 LBS
46° - 60°	290 LBS

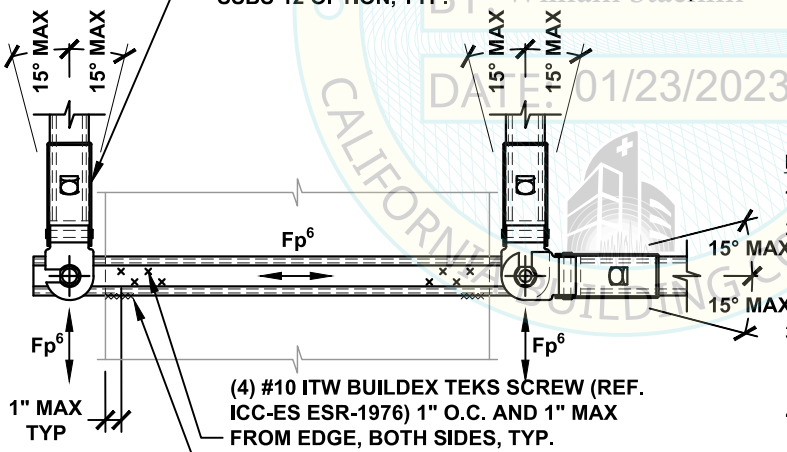

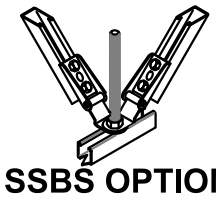

SSBS OPTION

VIEW A-A

NOTES:

1. REF. SECTION A1 FOR GENERAL NOTES.
2. PROVIDE ROD STIFFENERS ONLY WHERE SEISMIC BRACKETS ARE ATTACHED TO THE ROD AND ROD LENGTH (L) EXCEEDS 25". REF. APPROPRIATE M10 PAGES FOR DETAIL.
3. REF. PAGE A6.0 - A6.2 FOR ALTERNATE ARRANGEMENTS OF SEISMIC BRACES AND ANGLE OR HSS MEMBER AS TRAPEZE.
4. PROVIDE (1) 1/2" DIA. CONNECTION IN CENTER HOLE WHEN STRUT BRACE IS INSTALLED INSIDE THE BRACKET AND (2) 1/2" DIA. CONNECTIONS IN (2) OUTER HOLES WHEN THE BRACE IS INSTALLED OUTSIDE OF THE BRACKET. REF. X2.3 FOR CONNECTION DETAILS.
5. MW-KY-50 (REF. X2.4) MUST BE USED ON TOP OF BOTTOM SHB WHEN STACKING (2) SHB ON THE SAME ROD.
6. DESIGN PROFESSIONAL SHALL CONSIDER ECCENTRIC LOAD DISTRIBUTION WHEN DETERMINING THE Fp VALUE USED IN DESIGN.

REVIEWED FOR CODE COMPLIANCE
HCAi
OPM-0043
By William Staehlin
DATE: 01/23/2023
CALIFORNIA BUILDING CODE 2022

MASON WEST
1601 E. Miraloma Ave. Placentia, CA 92870
TEL (714) 630 - 0701, www.masonwest.com

Jiefu "Jeff" Zhang, SE
California SE No. S5270

PAGE
D1.22

HANGER ROD DIAMETER = 5/8"

RECTANGULAR DUCT TRANSVERSE SEISMIC SOLID BRACING SYSTEM 100 PLF MAX

KIT OPTIONS
TS20T
TS2012T
TSH512T
TSH520T

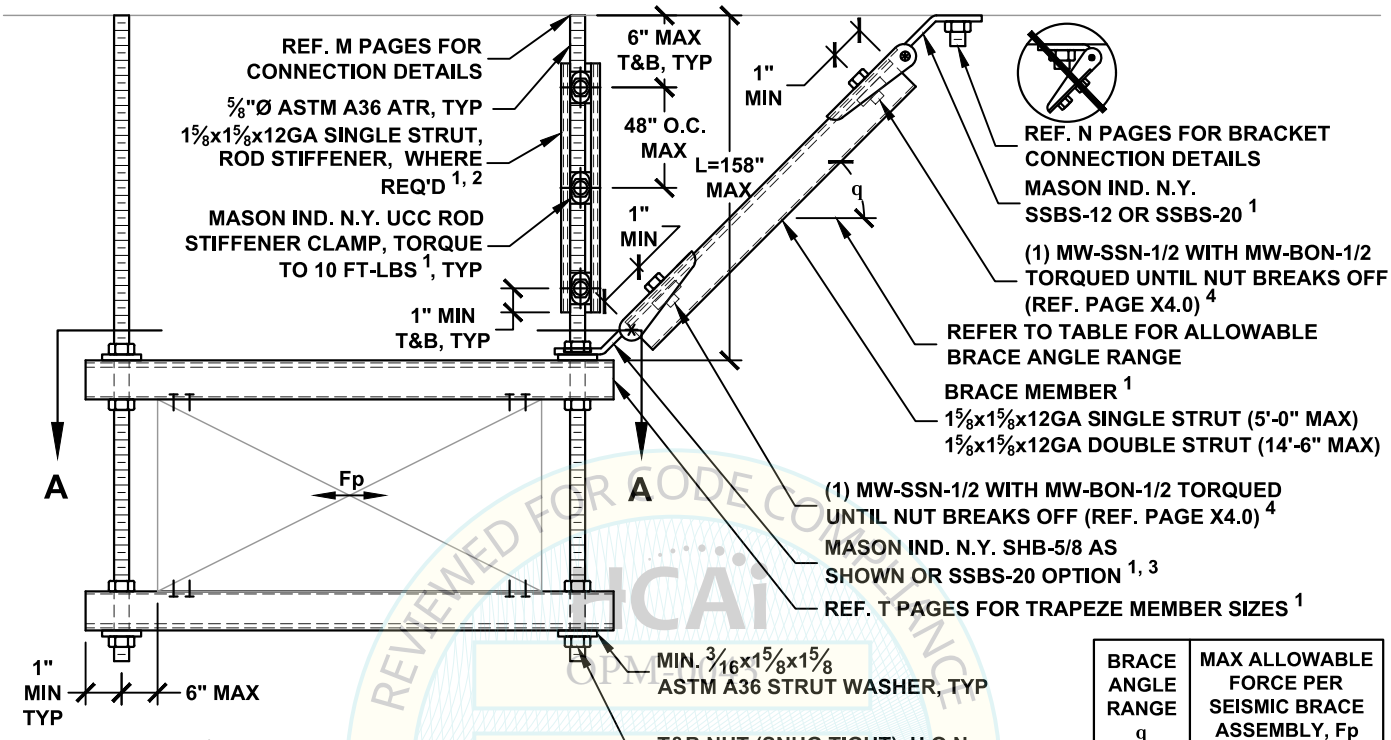

BRACE ANGLE RANGE q	MAX ALLOWABLE FORCE PER SEISMIC BRACE ASSEMBLY, Fp
30° - 45°	590 LBS
46° - 60°	420 LBS

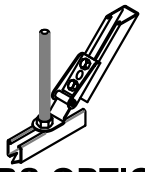

SSBS OPTION

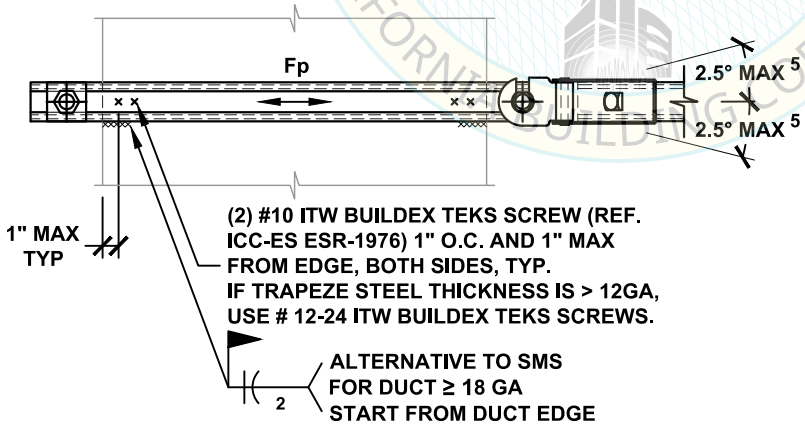

VIEW A-A

NOTES:

1. REF. SECTION A1 FOR GENERAL NOTES.
2. PROVIDE ROD STIFFENER ONLY WHERE SEISMIC BRACKET IS ATTACHED TO THE ROD AND ROD LENGTH (L) EXCEEDS 31". REF. APPROPRIATE M10 PAGES FOR DETAIL.
3. REF. PAGE A6.0 - A6.2 FOR ALTERNATE ARRANGEMENTS OF SEISMIC BRACES AND ANGLE OR HSS MEMBER AS TRAPEZE.
4. PROVIDE (1) 1/2" DIA. CONNECTION IN CENTER HOLE WHEN STRUT BRACE IS INSTALLED INSIDE THE BRACKET AND (2) 1/2" DIA. CONNECTIONS IN (2) OUTER HOLES WHEN THE BRACE IS INSTALLED OUTSIDE OF THE BRACKET. REF. X2.3 FOR CONNECTION DETAILS.
5. ANGLE MAY BE INCREASED UP TO 15°, REF. PAGE A5.0.

REVIEWED FOR CODE COMPLIANCE
HCAi
OPM-0043
BY: William Staehlin
DATE: 01/23/2023
CALIFORNIA BUILDING CODE 2022

MASON WEST
1601 E. Miraloma Ave. Placentia, CA 92870
TEL (714) 630 - 0701, www.masonwest.com

Jiefu "Jeff" Zhang, SE
California SE No. S5270

PAGE
D1.30

HANGER ROD DIAMETER = 5/8"

RECTANGULAR DUCT LONGITUDINAL SEISMIC SOLID BRACING SYSTEM 100 PLF MAX

KIT OPTIONS
TS20L
TS2012L
TSH512L
TSH520L

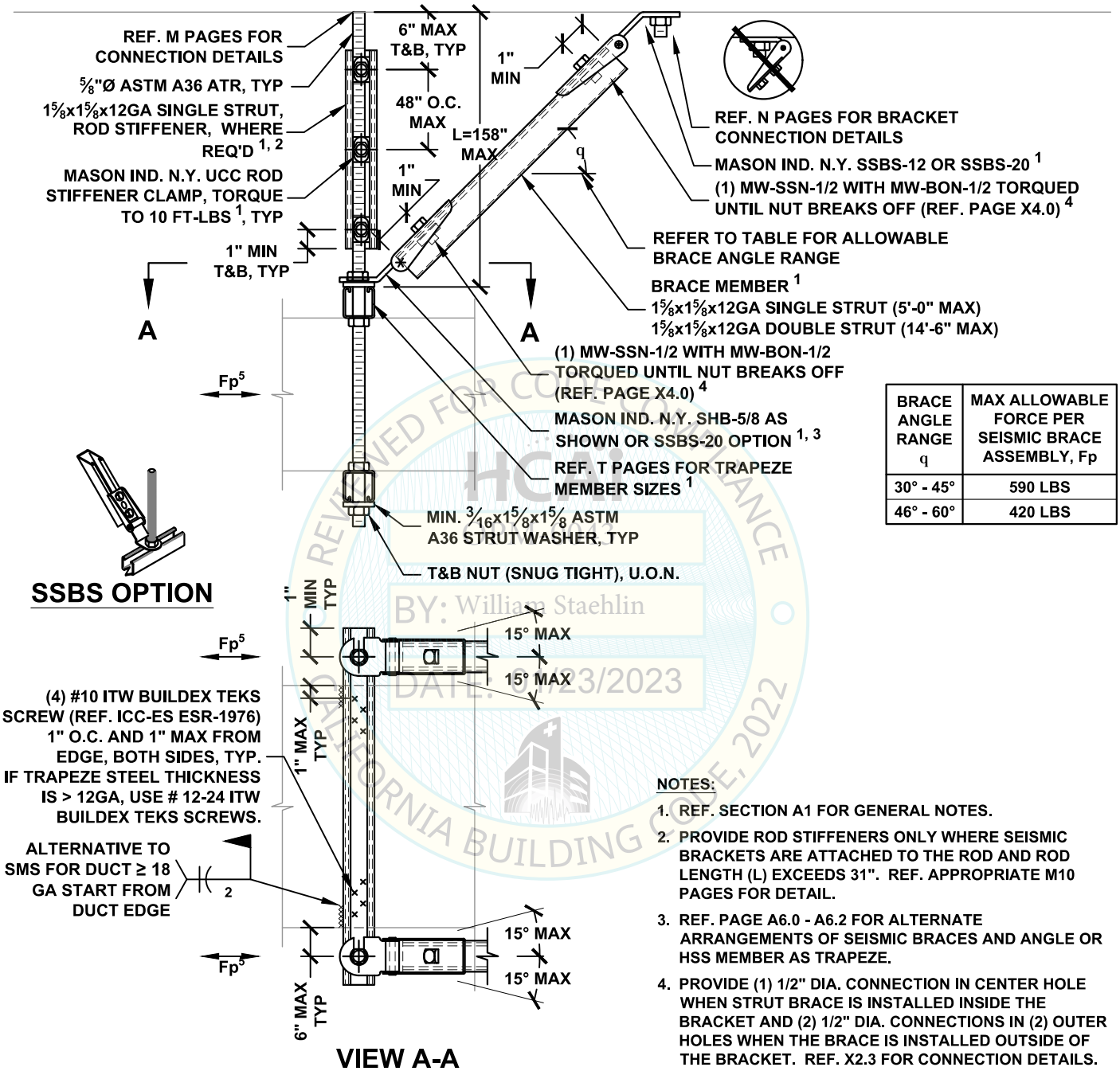

BRACE ANGLE RANGE q	MAX ALLOWABLE FORCE PER SEISMIC BRACE ASSEMBLY, Fp
30° - 45°	590 LBS
46° - 60°	420 LBS

REVIEWED FOR CODE COMPLIANCE
HCAI
BY: William Staehlin
DATE: 1/23/2023
CALIFORNIA BUILDING CODE, 2022

NOTES:

1. REF. SECTION A1 FOR GENERAL NOTES.
2. PROVIDE ROD STIFFENERS ONLY WHERE SEISMIC BRACKETS ARE ATTACHED TO THE ROD AND ROD LENGTH (L) EXCEEDS 31". REF. APPROPRIATE M10 PAGES FOR DETAIL.
3. REF. PAGE A6.0 - A6.2 FOR ALTERNATE ARRANGEMENTS OF SEISMIC BRACES AND ANGLE OR HSS MEMBER AS TRAPEZE.
4. PROVIDE (1) 1/2" DIA. CONNECTION IN CENTER HOLE WHEN STRUT BRACE IS INSTALLED INSIDE THE BRACKET AND (2) 1/2" DIA. CONNECTIONS IN (2) OUTER HOLES WHEN THE BRACE IS INSTALLED OUTSIDE OF THE BRACKET. REF. X2.3 FOR CONNECTION DETAILS.
5. DESIGN PROFESSIONAL SHALL CONSIDER ECCENTRIC LOAD DISTRIBUTION WHEN DETERMINING THE Fp VALUE USED IN DESIGN.

MASON WEST
1601 E. Miraloma Ave. Placentia, CA 92870
TEL (714) 630 - 0701, www.masonwest.com

Jiefu "Jeff" Zhang, SE
California SE No. S5270

PAGE
D1.31

HANGER ROD DIAMETER = 5/8"

RECTANGULAR DUCT ALL-DIRECTIONAL SEISMIC SOLID BRACING SYSTEM 100 PLF MAX

KIT OPTIONS
TS20A
TS2012A
TSH512A
TSH520A

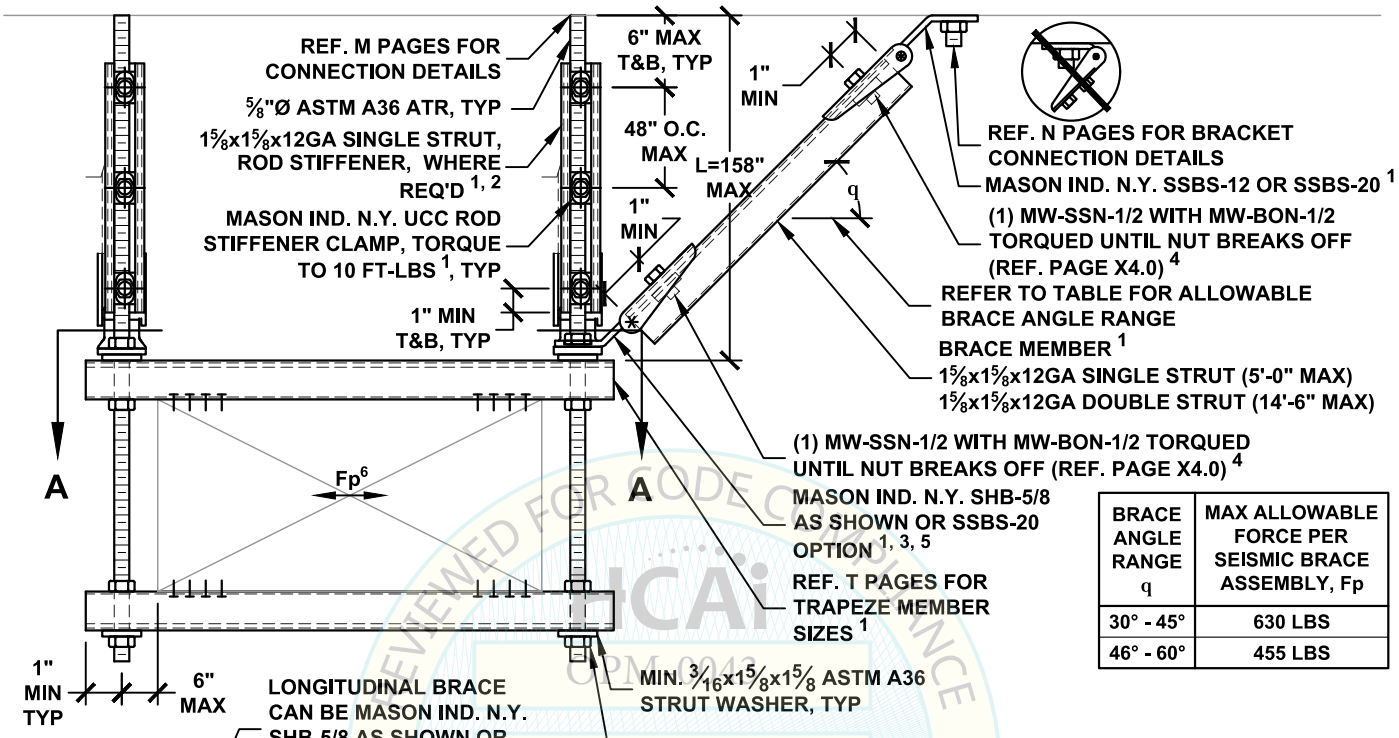

BRACE ANGLE RANGE q	MAX ALLOWABLE FORCE PER SEISMIC BRACE ASSEMBLY, Fp
30° - 45°	630 LBS
46° - 60°	455 LBS

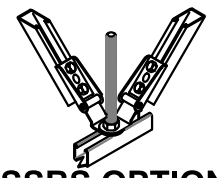

SSBS OPTION

VIEW A-A

NOTES:

1. REF. SECTION A1 FOR GENERAL NOTES.
2. PROVIDE ROD STIFFENERS ONLY WHERE SEISMIC BRACKETS ARE ATTACHED TO THE ROD AND ROD LENGTH (L) EXCEEDS 31". REF. APPROPRIATE M10 PAGES FOR DETAIL.
3. REF. PAGE A6.0 - A6.2 FOR ALTERNATE ARRANGEMENTS OF SEISMIC BRACES AND ANGLE OR HSS MEMBER AS TRAPEZE.
4. PROVIDE (1) 1/2" DIA. CONNECTION IN CENTER HOLE WHEN STRUT BRACE IS INSTALLED INSIDE THE BRACKET AND (2) 1/2" DIA. CONNECTIONS IN (2) OUTER HOLES WHEN THE BRACE IS INSTALLED OUTSIDE OF THE BRACKET. REF. X2.3 FOR CONNECTION DETAILS.
5. MW-KY-63 (REF. X2.4) MUST BE USED ON TOP OF BOTTOM SHB WHEN STACKING (2) SHB ON THE SAME ROD.
6. DESIGN PROFESSIONAL SHALL CONSIDER ECCENTRIC LOAD DISTRIBUTION WHEN DETERMINING THE Fp VALUE USED IN DESIGN.

REVIEWED FOR CODE COMPLIANCE OPM-0043 DATE: 01/23/2023 by William Staehlin CALIFORNIA BUILDING CODE 2022

MASON WEST
1601 E. Miraloma Ave. Placentia, CA 92870
TEL (714) 630 - 0701, www.masonwest.com

Jiefu "Jeff" Zhang, SE
California SE No. S5270

PAGE
D1.32

HANGER ROD DIAMETER = 5/8"	RECTANGULAR DUCT TRANSVERSE SEISMIC SOLID BRACING SYSTEM 100 PLF MAX	KIT OPTIONS TSH54T TSH5T

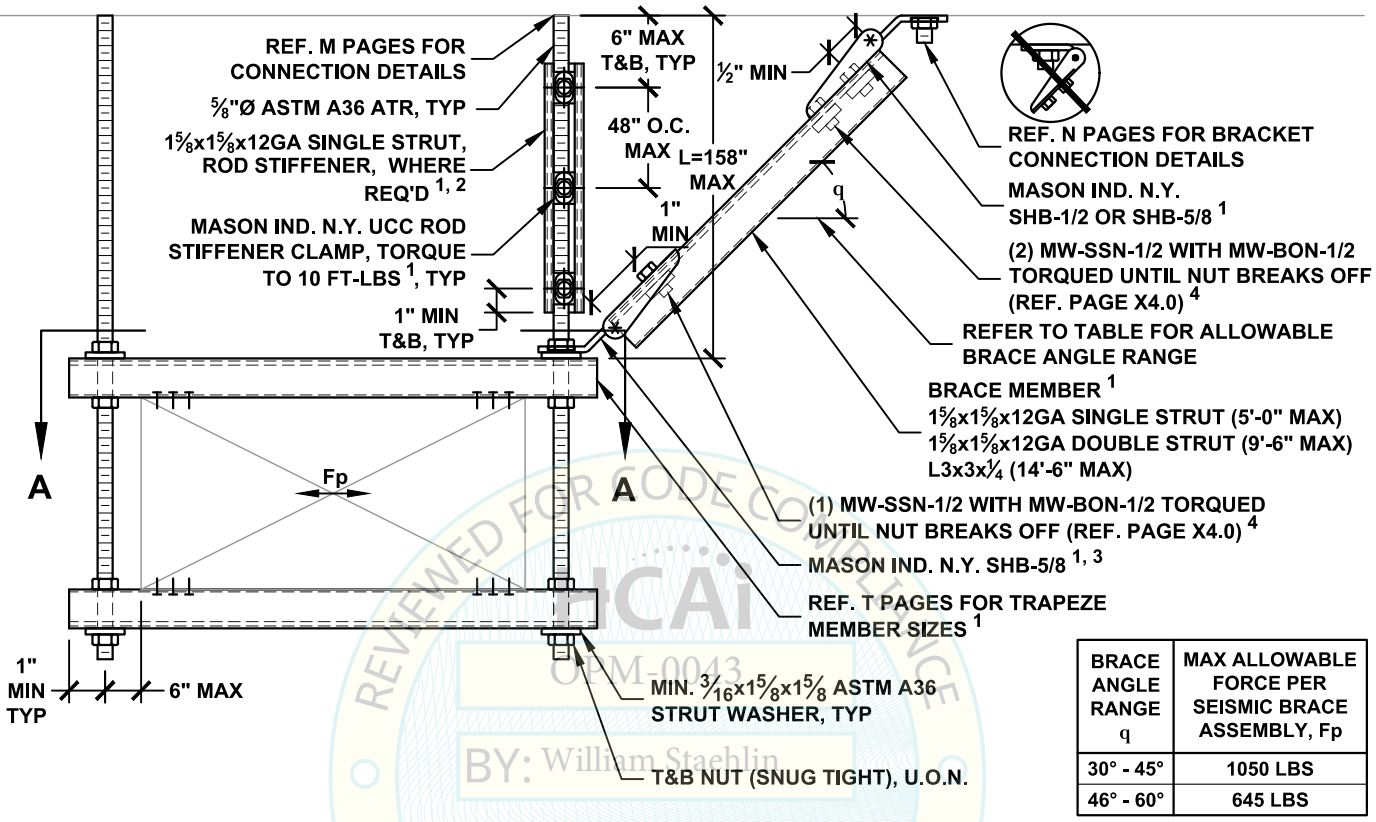

BRACE ANGLE RANGE q	MAX ALLOWABLE FORCE PER SEISMIC BRACE ASSEMBLY, Fp
30° - 45°	1050 LBS
46° - 60°	645 LBS

REVIEWED FOR CODE COMPLIANCE
HCAi
OPM-0043
BY: William Staehlin
DATE: 01/23/2023
CALIFORNIA BUILDING CODE, 2022

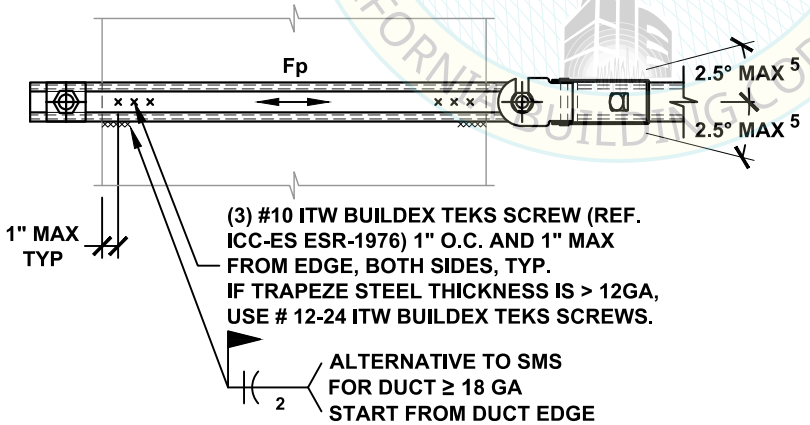

VIEW A-A

NOTES:

1. REF. SECTION A1 FOR GENERAL NOTES. MAX ALLOWABLE FORCE, Fp, MAY BE LIMITED BY ANCHORAGE CAPACITY.
2. PROVIDE ROD STIFFENER ONLY WHERE SEISMIC BRACKET IS ATTACHED TO THE ROD AND ROD LENGTH (L) EXCEEDS 31". REF. APPROPRIATE M10 PAGES FOR DETAIL.
3. REF. PAGE A6.0 - A6.2 FOR ALTERNATE ARRANGEMENTS OF SEISMIC BRACES AND ANGLE OR HSS MEMBER AS TRAPEZE.
4. PROVIDE (1) 1/2" DIA. CONNECTION IN CENTER HOLE WHEN STRUT BRACE IS INSTALLED INSIDE THE BRACKET AND (2) 1/2" DIA. CONNECTIONS IN (2) OUTER HOLES WHEN THE BRACE IS INSTALLED OUTSIDE OF THE BRACKET. REF. X2.3 FOR CONNECTION DETAILS.
5. ANGLE MAY BE INCREASED UP TO 15°, REF. PAGE A5.0

MASON WEST
1601 E. Miraloma Ave. Placentia, CA 92870
TEL (714) 630 - 0701, www.masonwest.com

Jiefu "Jeff" Zhang, SE
California SE No. S5270

HANGER ROD DIAMETER = 5/8"	RECTANGULAR DUCT LONGITUDINAL SEISMIC SOLID BRACING SYSTEM 100 PLF MAX	KIT OPTIONS TSH54L TSH5L

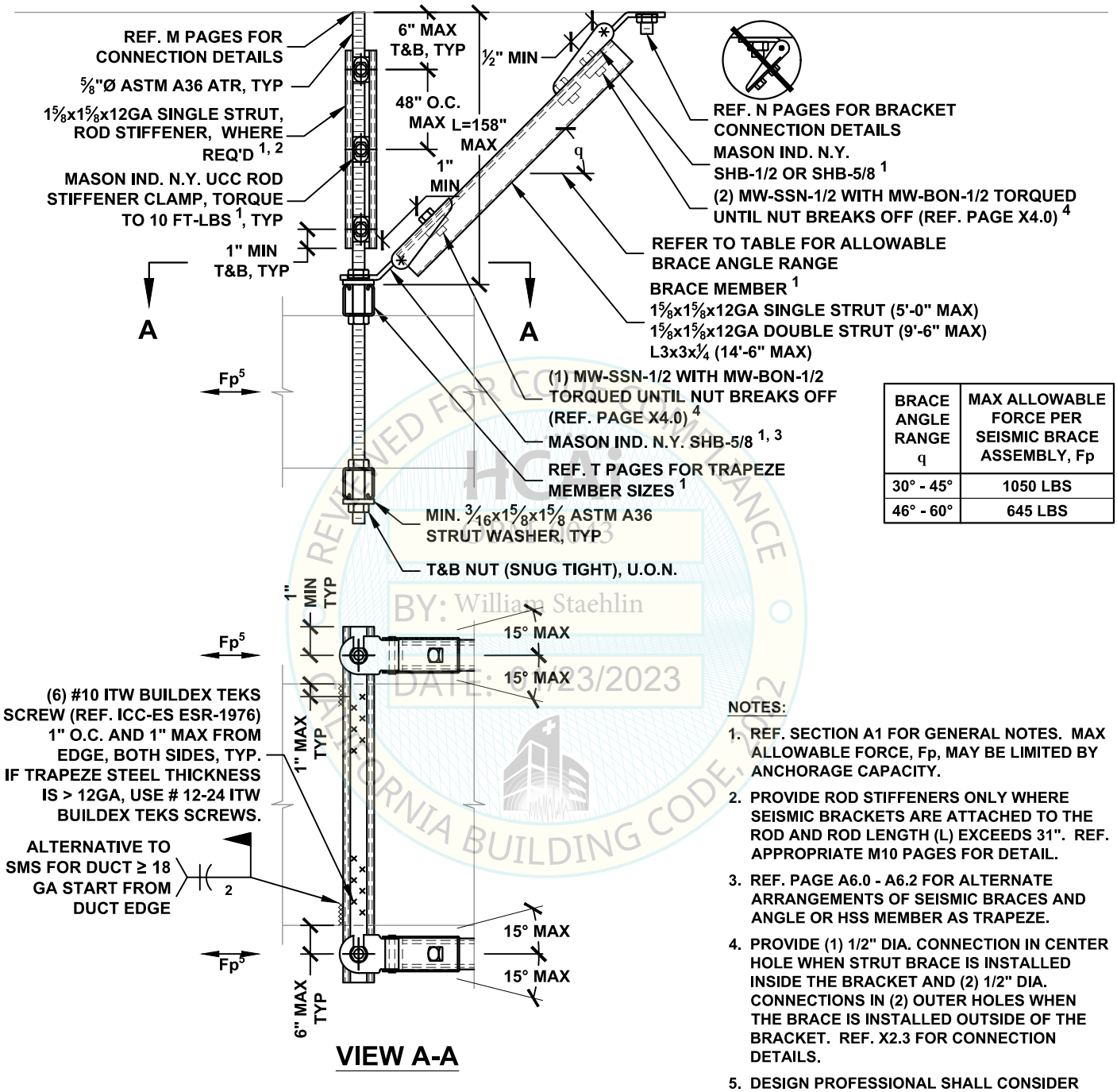

VIEW A-A

BRACE ANGLE RANGE q	MAX ALLOWABLE FORCE PER SEISMIC BRACE ASSEMBLY, Fp
30° - 45°	1050 LBS
46° - 60°	645 LBS

NOTES:

1. REF. SECTION A1 FOR GENERAL NOTES. MAX ALLOWABLE FORCE, Fp, MAY BE LIMITED BY ANCHORAGE CAPACITY.
2. PROVIDE ROD STIFFENERS ONLY WHERE SEISMIC BRACKETS ARE ATTACHED TO THE ROD AND ROD LENGTH (L) EXCEEDS 31". REF. APPROPRIATE M10 PAGES FOR DETAIL.
3. REF. PAGE A6.0 - A6.2 FOR ALTERNATE ARRANGEMENTS OF SEISMIC BRACES AND ANGLE OR HSS MEMBER AS TRAPEZE.
4. PROVIDE (1) 1/2" DIA. CONNECTION IN CENTER HOLE WHEN STRUT BRACE IS INSTALLED INSIDE THE BRACKET AND (2) 1/2" DIA. CONNECTIONS IN (2) OUTER HOLES WHEN THE BRACE IS INSTALLED OUTSIDE OF THE BRACKET. REF. X2.3 FOR CONNECTION DETAILS.
5. DESIGN PROFESSIONAL SHALL CONSIDER ECCENTRIC LOAD DISTRIBUTION WHEN DETERMINING THE Fp VALUE USED IN DESIGN.

REVIEWED FOR CODE COMPLIANCE
HCAI
BY: William Staehlin
DATE: 1/23/2023
CALIFORNIA BUILDING CODE 2022

MASON WEST
1601 E. Miraloma Ave. Placentia, CA 92870
TEL (714) 630 - 0701, www.masonwest.com

Jiefu "Jeff" Zhang, SE
California SE No. S5270

PAGE
D1.34

HANGER ROD DIAMETER = ⅝"

RECTANGULAR DUCT ALL-DIRECTIONAL SEISMIC SOLID BRACING SYSTEM 100 PLF MAX

KIT OPTIONS
TSH54A
TSH5A

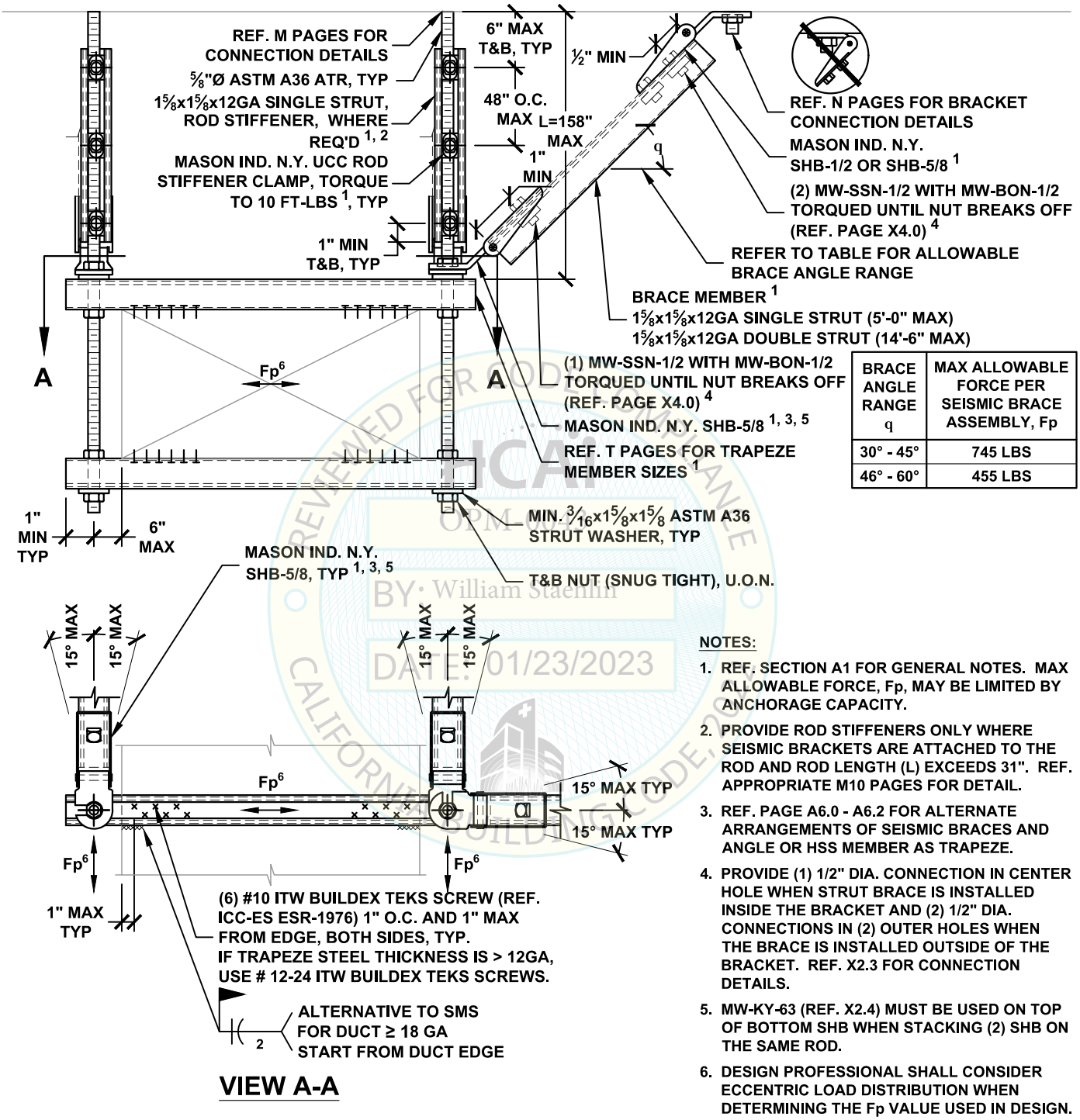

VIEW A-A

BRACE ANGLE RANGE q	MAX ALLOWABLE FORCE PER SEISMIC BRACE ASSEMBLY, Fp
30° - 45°	745 LBS
46° - 60°	455 LBS

NOTES:

1. REF. SECTION A1 FOR GENERAL NOTES. MAX ALLOWABLE FORCE, Fp, MAY BE LIMITED BY ANCHORAGE CAPACITY.
2. PROVIDE ROD STIFFENERS ONLY WHERE SEISMIC BRACKETS ARE ATTACHED TO THE ROD AND ROD LENGTH (L) EXCEEDS 31". REF. APPROPRIATE M10 PAGES FOR DETAIL.
3. REF. PAGE A6.0 - A6.2 FOR ALTERNATE ARRANGEMENTS OF SEISMIC BRACES AND ANGLE OR HSS MEMBER AS TRAPEZE.
4. PROVIDE (1) 1/2" DIA. CONNECTION IN CENTER HOLE WHEN STRUT BRACE IS INSTALLED INSIDE THE BRACKET AND (2) 1/2" DIA. CONNECTIONS IN (2) OUTER HOLES WHEN THE BRACE IS INSTALLED OUTSIDE OF THE BRACKET. REF. X2.3 FOR CONNECTION DETAILS.
5. MW-KY-63 (REF. X2.4) MUST BE USED ON TOP OF BOTTOM SHB WHEN STACKING (2) SHB ON THE SAME ROD.
6. DESIGN PROFESSIONAL SHALL CONSIDER ECCENTRIC LOAD DISTRIBUTION WHEN DETERMINING THE Fp VALUE USED IN DESIGN.

REVIEWED FOR CODE COMPLIANCE
OPM-0043
BY: William Staehlin
DATE: 01/23/2023
CALIFORNIA BUILDING CODE, 2019

MASON WEST
1601 E. Miraloma Ave. Placentia, CA 92870
TEL (714) 630 - 0701, www.masonwest.com

Jiefu "Jeff" Zhang, SE
California SE No. S5270

PAGE
D1.35

HANGER ROD DIAMETER = 3/8"	ROUND DUCT TRANSVERSE SEISMIC SOLID BRACING SYSTEM 30 PLF MAX	KIT OPTIONS TS12T TS1220T TSH312T TSH320T

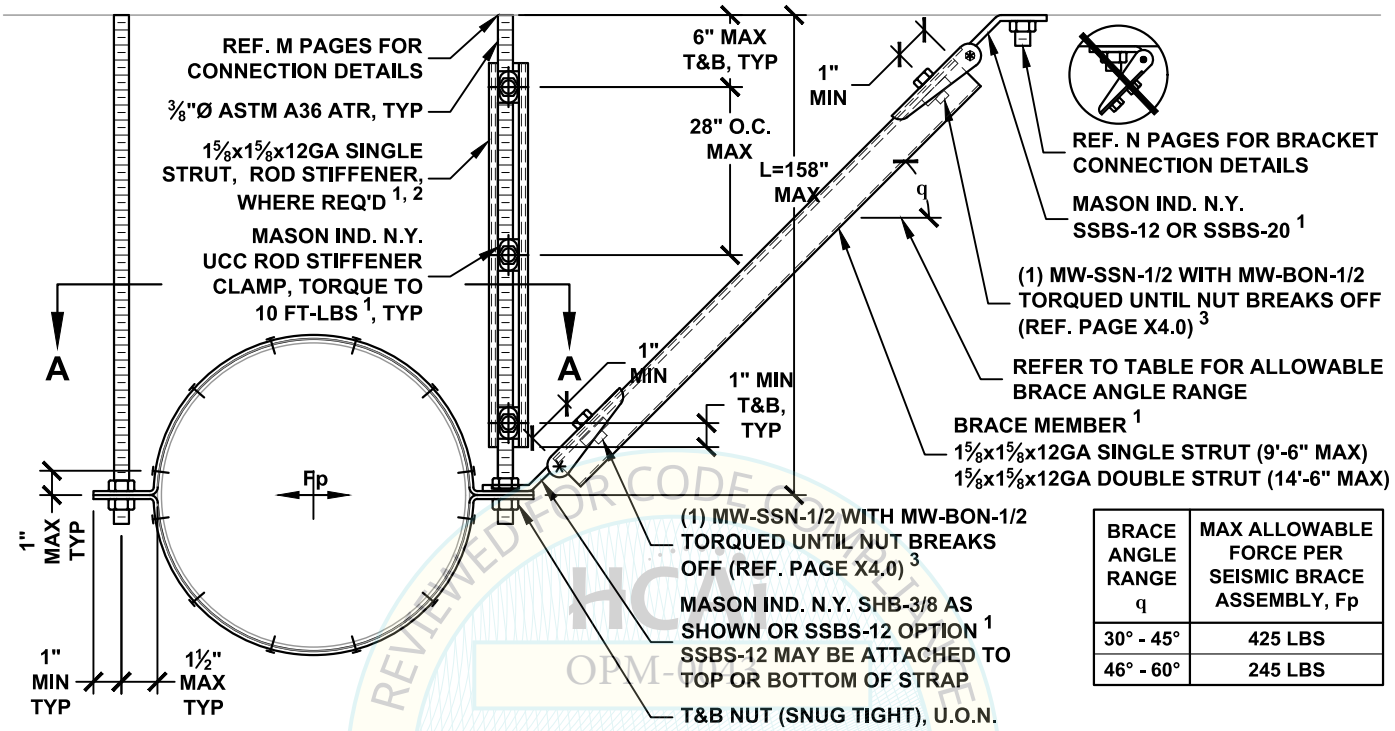

BRACE ANGLE RANGE q	MAX ALLOWABLE FORCE PER SEISMIC BRACE ASSEMBLY, Fp
30° - 45°	425 LBS
46° - 60°	245 LBS

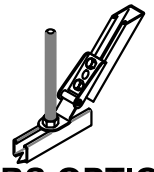

SSBS OPTION

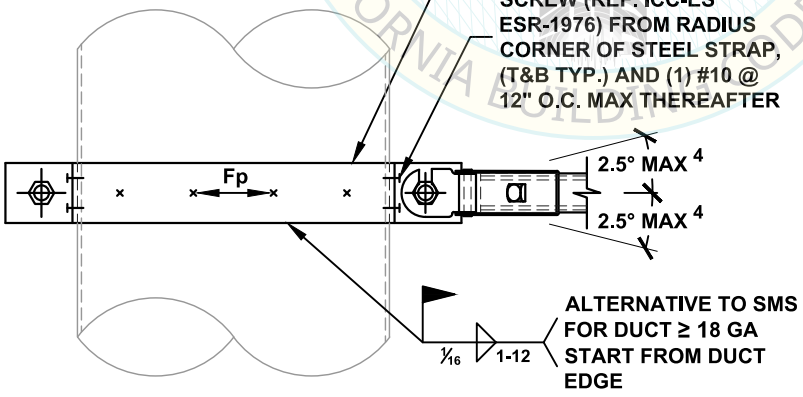

VIEW A-A

NOTES:

1. REF. SECTION A1 FOR GENERAL NOTES.
2. PROVIDE ROD STIFFENER ONLY WHERE SEISMIC BRACKET IS ATTACHED TO THE ROD AND ROD LENGTH (L) EXCEEDS 18". REF. APPROPRIATE M10 PAGES FOR DETAIL.
3. PROVIDE (1) 1/2" DIA. CONNECTION IN CENTER HOLE WHEN STRUT BRACE IS INSTALLED INSIDE THE BRACKET AND (2) 1/2" DIA. CONNECTIONS IN (2) OUTER HOLES WHEN THE BRACE IS INSTALLED OUTSIDE OF THE BRACKET. REF. X2.3 FOR CONNECTION DETAILS.
4. ANGLE MAY BE INCREASED UP TO 15°, REF. PAGE A5.0

REVIEWED FOR CODE COMPLIANCE
HCAI
OPM-0043
BY: William Staehlin
DATE: 01/23/2023
CALIFORNIA BUILDING CODE, 2022

MASON WEST
1601 E. Miraloma Ave. Placentia, CA 92870
TEL (714) 630 - 0701, www.masonwest.com

Jiefu "Jeff" Zhang, SE
California SE No. S5270

HANGER ROD DIAMETER = 3/8"	ROUND DUCT LONGITUDINAL SEISMIC SOLID BRACING SYSTEM 30 PLF MAX	KIT OPTIONS TS12L TS1220L TSH312L TSH320L

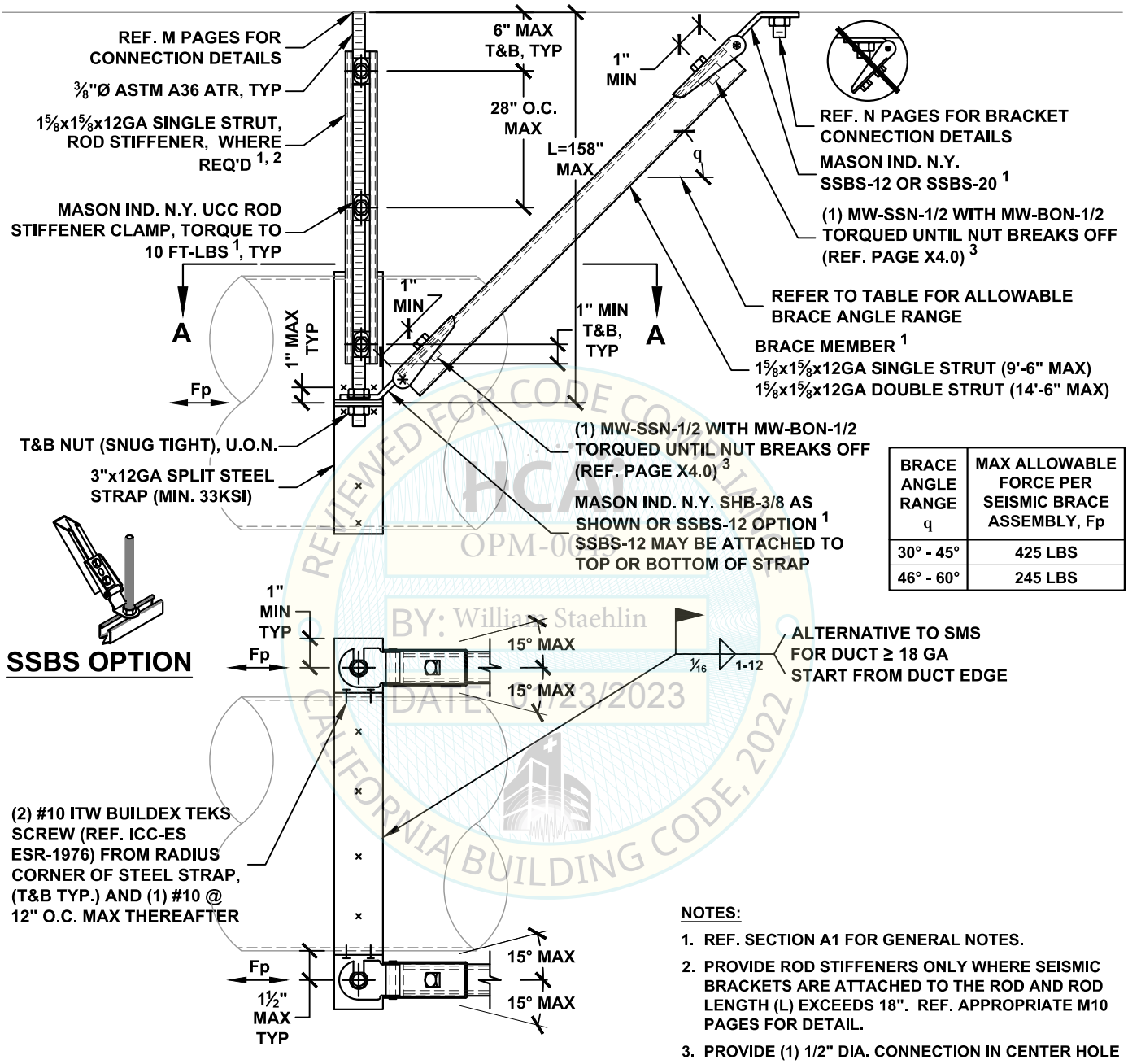

BRACE ANGLE RANGE q	MAX ALLOWABLE FORCE PER SEISMIC BRACE ASSEMBLY, Fp
30° - 45°	425 LBS
46° - 60°	245 LBS

VIEW A-A

NOTES:

1. REF. SECTION A1 FOR GENERAL NOTES.
2. PROVIDE ROD STIFFENERS ONLY WHERE SEISMIC BRACKETS ARE ATTACHED TO THE ROD AND ROD LENGTH (L) EXCEEDS 18". REF. APPROPRIATE M10 PAGES FOR DETAIL.
3. PROVIDE (1) 1/2" DIA. CONNECTION IN CENTER HOLE WHEN STRUT BRACE IS INSTALLED INSIDE THE BRACKET AND (2) 1/2" DIA. CONNECTIONS IN (2) OUTER HOLES WHEN THE BRACE IS INSTALLED OUTSIDE OF THE BRACKET. REF. X2.3 FOR CONNECTION DETAILS.

REVIEWED FOR CODE COMPLIANCE
HCAI
OPM-0043
BY: William Staehlin
UPDATED: 1/23/2023
CALIFORNIA BUILDING CODE, 2022

MASON WEST
1601 E. Miraloma Ave. Placentia, CA 92870
TEL (714) 630 - 0701, www.masonwest.com

Jiefu "Jeff" Zhang, SE
California SE No. S5270

PAGE
D2.11

HANGER ROD DIAMETER = 3/8"	ROUND DUCT ALL-DIRECTIONAL SEISMIC SOLID BRACING SYSTEM 30 PLF MAX	KIT OPTIONS TS12A TS1220A TSH312A TSH320A

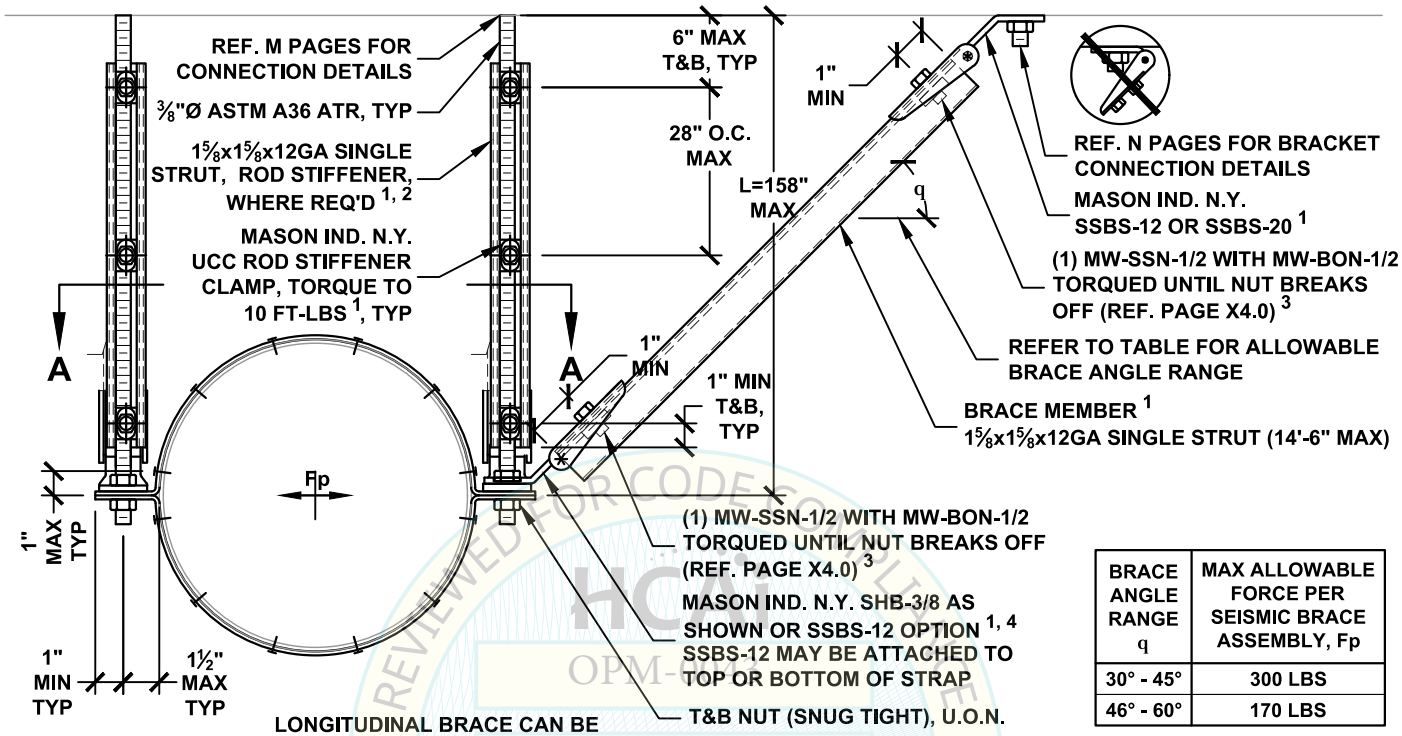

BRACE ANGLE RANGE q	MAX ALLOWABLE FORCE PER SEISMIC BRACE ASSEMBLY, Fp
30° - 45°	300 LBS
46° - 60°	170 LBS

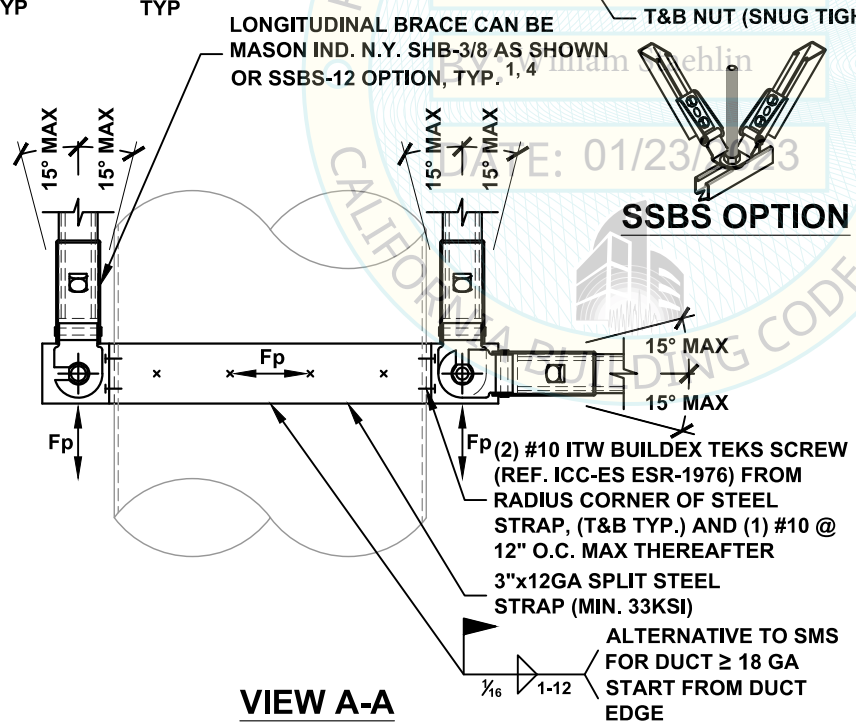

SSBS OPTION

VIEW A-A

NOTES:

1. REF. SECTION A1 FOR GENERAL NOTES.
2. PROVIDE ROD STIFFENERS ONLY WHERE SEISMIC BRACKETS ARE ATTACHED TO THE ROD AND ROD LENGTH (L) EXCEEDS 18". REF. APPROPRIATE M10 PAGES FOR DETAIL.
3. PROVIDE (1) 1/2" DIA. CONNECTION IN CENTER HOLE WHEN STRUT BRACE IS INSTALLED INSIDE THE BRACKET AND (2) 1/2" DIA. CONNECTIONS IN (2) OUTER HOLES WHEN THE BRACE IS INSTALLED OUTSIDE OF THE BRACKET. REF. X2.3 FOR CONNECTION DETAILS.
4. MW-KY-38 (REF. X2.4) MUST BE USED ON TOP OF BOTTOM SHB WHEN STACKING (2) SHB ON THE SAME ROD.

REVIEWED FOR CODE COMPLIANCE
HCAI
OPM-0043
By: William Staehlin
DATE: 01/23/2023
CALIFORNIA BUILDING CODE, 2022

MASON WEST
1601 E. Miraloma Ave. Placentia, CA 92870
TEL (714) 630 - 0701, www.masonwest.com

Jiefu "Jeff" Zhang, SE
California SE No. S5270

PAGE
D2.12

HANGER ROD DIAMETER = ½"

ROUND DUCT TRANSVERSE SEISMIC SOLID BRACING SYSTEM 60 PLF MAX

KIT OPTIONS
TS12T
TS1220T
TSH412T
TSH420T

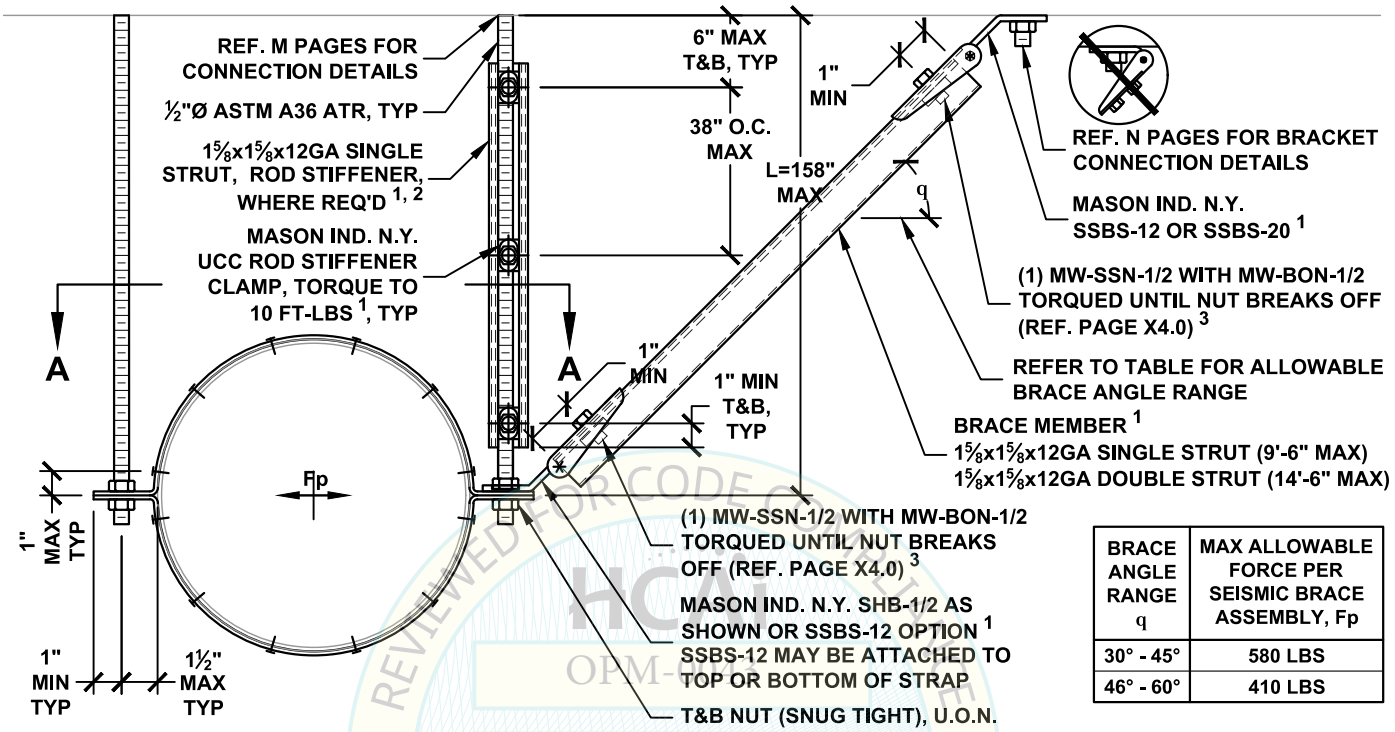

BRACE ANGLE RANGE q	MAX ALLOWABLE FORCE PER SEISMIC BRACE ASSEMBLY, Fp
30° - 45°	580 LBS
46° - 60°	410 LBS

REVIEWED FOR CODE COMPLIANCE
HCAI
OPM-0043
BY: William Staehlin
DATE: 01/23/2023
CALIFORNIA BUILDING CODE, 2022

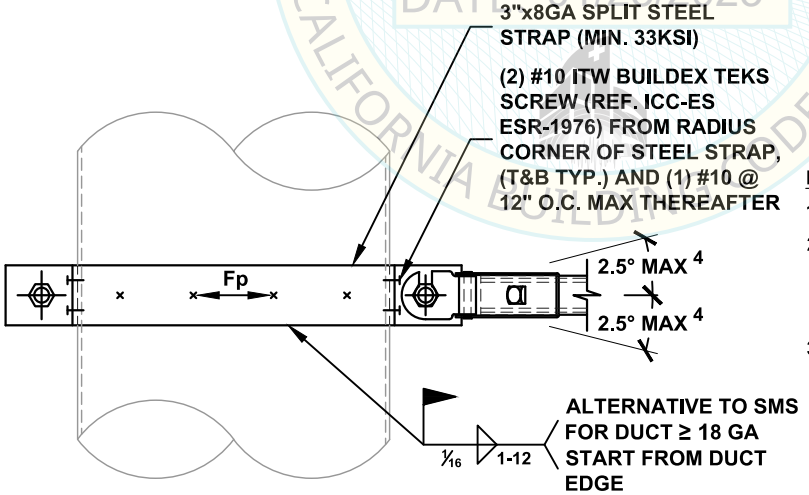

VIEW A-A

NOTES:

1. REF. SECTION A1 FOR GENERAL NOTES.
2. PROVIDE ROD STIFFENER ONLY WHERE SEISMIC BRACKET IS ATTACHED TO THE ROD AND ROD LENGTH (L) EXCEEDS 25". REF. APPROPRIATE M10 PAGES FOR DETAIL.
3. PROVIDE (1) 1/2" DIA. CONNECTION IN CENTER HOLE WHEN STRUT BRACE IS INSTALLED INSIDE THE BRACKET AND (2) 1/2" DIA. CONNECTIONS IN (2) OUTER HOLES WHEN THE BRACE IS INSTALLED OUTSIDE OF THE BRACKET. REF. X2.3 FOR CONNECTION DETAILS.
4. ANGLE MAY BE INCREASED UP TO 15°, REF. PAGE A5.0

MASON WEST
1601 E. Miraloma Ave. Placentia, CA 92870
TEL (714) 630 - 0701, www.masonwest.com

Jiefu "Jeff" Zhang, SE
California SE No. S5270

PAGE
D2.20

HANGER ROD DIAMETER = ½"

ROUND DUCT LONGITUDINAL SEISMIC SOLID BRACING SYSTEM 60 PLF MAX

KIT OPTIONS
TS12L
TS1220L
TSH412L
TSH420L

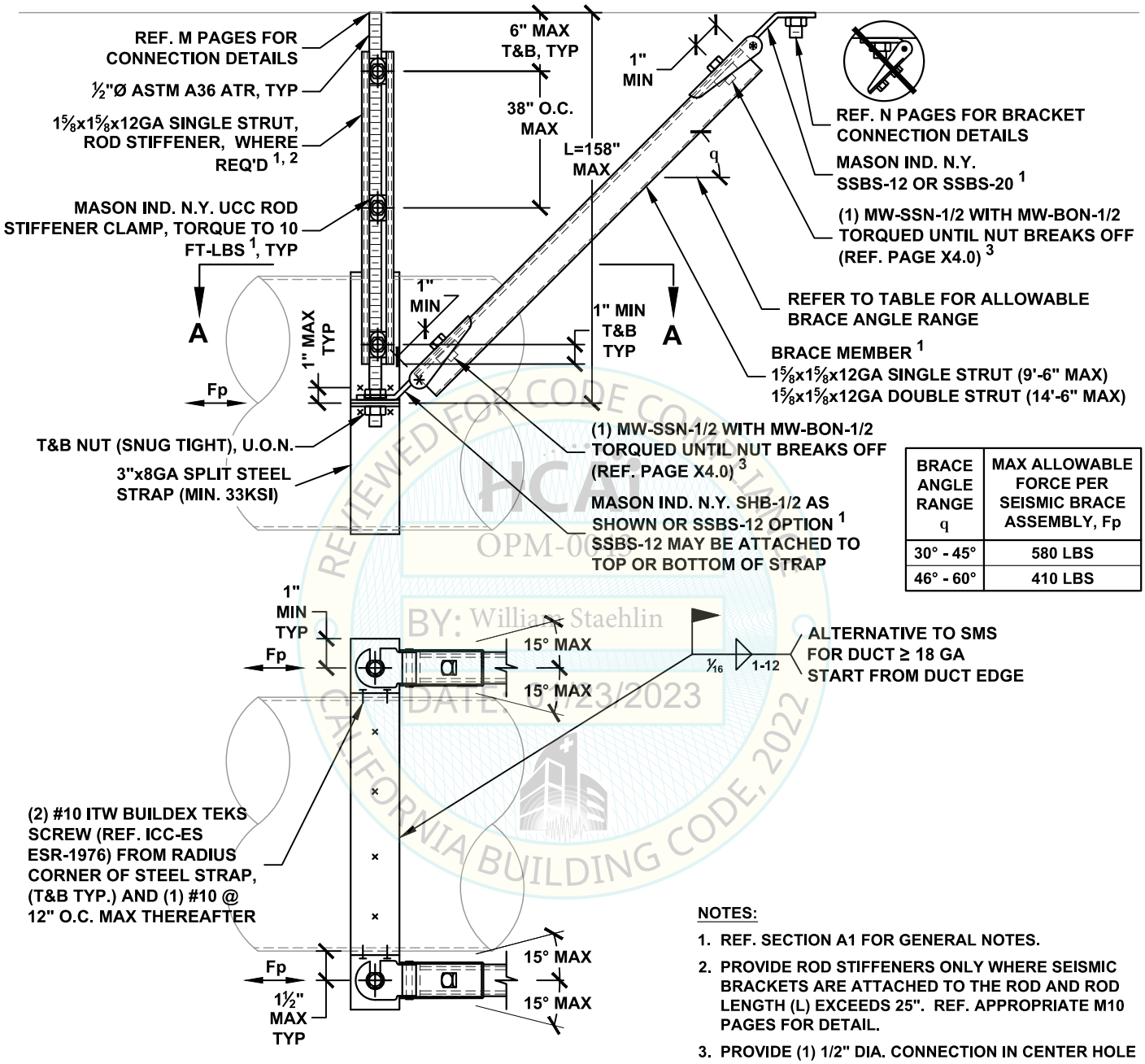

BRACE ANGLE RANGE q	MAX ALLOWABLE FORCE PER SEISMIC BRACE ASSEMBLY, Fp
30° - 45°	580 LBS
46° - 60°	410 LBS

VIEW A-A

NOTES:

1. REF. SECTION A1 FOR GENERAL NOTES.
2. PROVIDE ROD STIFFENERS ONLY WHERE SEISMIC BRACKETS ARE ATTACHED TO THE ROD AND ROD LENGTH (L) EXCEEDS 25". REF. APPROPRIATE M10 PAGES FOR DETAIL.
3. PROVIDE (1) 1/2" DIA. CONNECTION IN CENTER HOLE WHEN STRUT BRACE IS INSTALLED INSIDE THE BRACKET AND (2) 1/2" DIA. CONNECTIONS IN (2) OUTER HOLES WHEN THE BRACE IS INSTALLED OUTSIDE OF THE BRACKET. REF. X2.3 FOR CONNECTION DETAILS.

REVIEWED FOR CODE COMPLIANCE
HCAI
OPM-0043
BY: William Staehlin
UPDATED: 1/23/2023
CALIFORNIA BUILDING CODE, 2022

MASON WEST
1601 E. Miraloma Ave. Placentia, CA 92870
TEL (714) 630 - 0701, www.masonwest.com

Jiefu "Jeff" Zhang, SE
California SE No. S5270

PAGE
D2.21

HANGER ROD DIAMETER = ½"

ROUND DUCT ALL-DIRECTIONAL SEISMIC SOLID BRACING SYSTEM 60 PLF MAX

KIT OPTIONS
TS12A
TS1220A
TSH412A
TSH420A

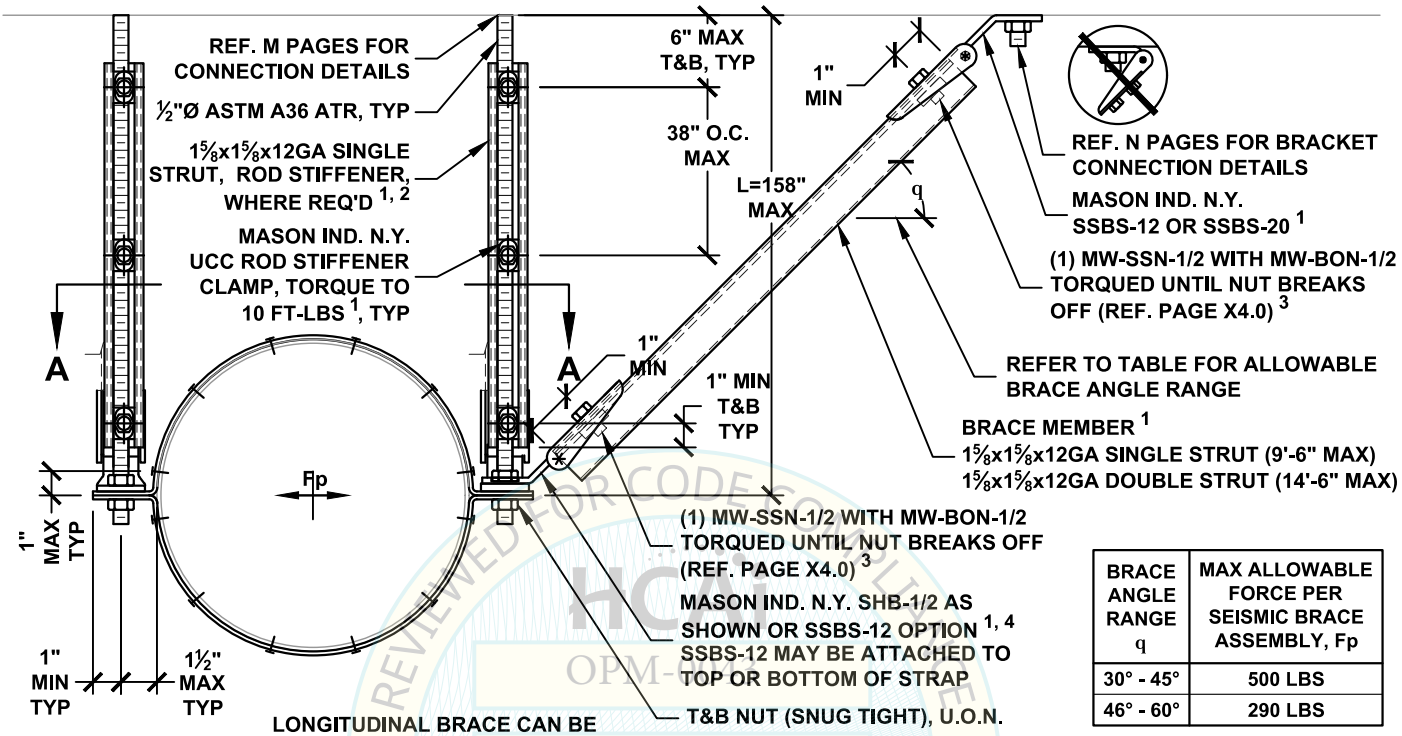

BRACE ANGLE RANGE q	MAX ALLOWABLE FORCE PER SEISMIC BRACE ASSEMBLY, Fp
30° - 45°	500 LBS
46° - 60°	290 LBS

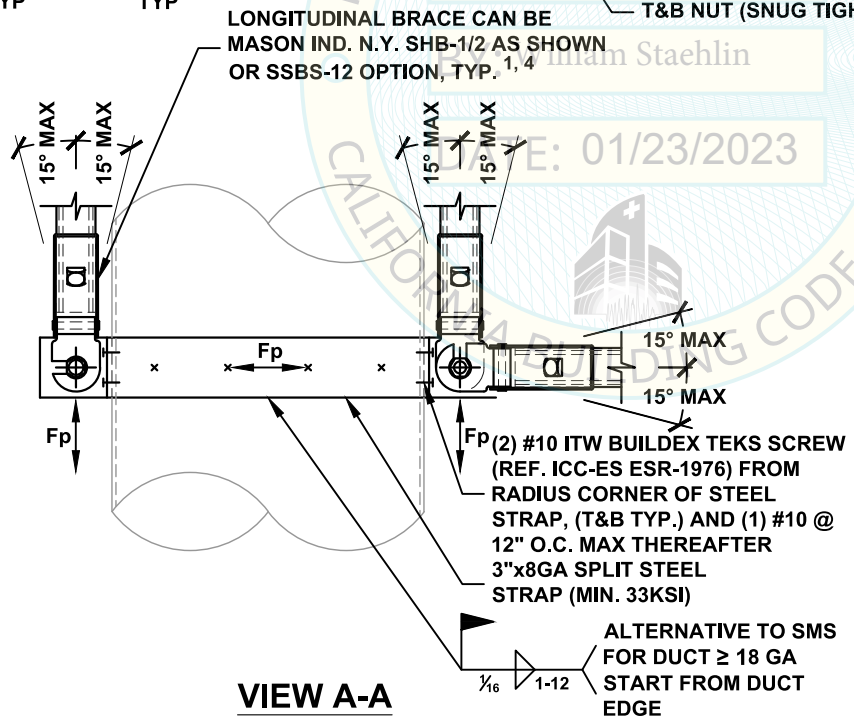

VIEW A-A

NOTES:

1. REF. SECTION A1 FOR GENERAL NOTES.
2. PROVIDE ROD STIFFENERS ONLY WHERE SEISMIC BRACKETS ARE ATTACHED TO THE ROD AND ROD LENGTH (L) EXCEEDS 25". REF. APPROPRIATE M10 PAGES FOR DETAIL.
3. PROVIDE (1) 1/2" DIA. CONNECTION IN CENTER HOLE WHEN STRUT BRACE IS INSTALLED INSIDE THE BRACKET AND (2) 1/2" DIA. CONNECTIONS (2) OUTER HOLES WHEN THE BRACE IS INSTALLED OUTSIDE OF THE BRACKET. REF. X2.3 FOR CONNECTION DETAILS.
4. MW-KY-50 (REF. X2.4) MUST BE USED ON TOP OF BOTTOM SHB WHEN STACKING (2) SHB ON THE SAME ROD.

REVIEWED FOR CODE COMPLIANCE
HCAI
OPM-0043
Reviewed by William Staehlin
DATE: 01/23/2023
CALIFORNIA BUILDING CODE, 2022

MASON WEST
1601 E. Miraloma Ave. Placentia, CA 92870
TEL (714) 630 - 0701, www.masonwest.com

Jiefu "Jeff" Zhang, SE
California SE No. S5270

PAGE
D2.22

HANGER ROD DIAMETER = 5/8"	ROUND DUCT TRANSVERSE SEISMIC SOLID BRACING SYSTEM 60 PLF MAX	KIT OPTIONS TSH54T TSH5T

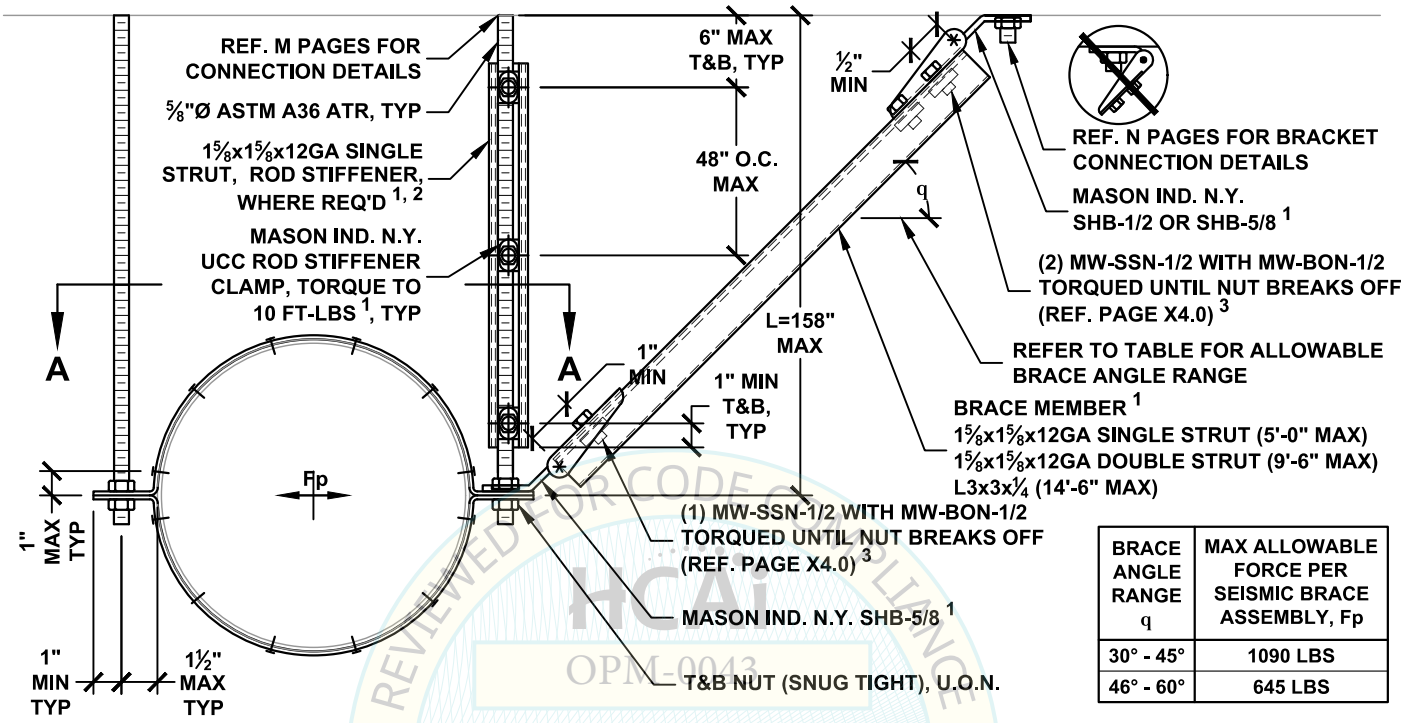

BRACE ANGLE RANGE q	MAX ALLOWABLE FORCE PER SEISMIC BRACE ASSEMBLY, Fp
30° - 45°	1090 LBS
46° - 60°	645 LBS

HCAi
OPM-0043
BY: William Staehlin
DATE: 01/23/2023
REVIEWED FOR CODE COMPLIANCE CALIFORNIA BUILDING CODE, 2022

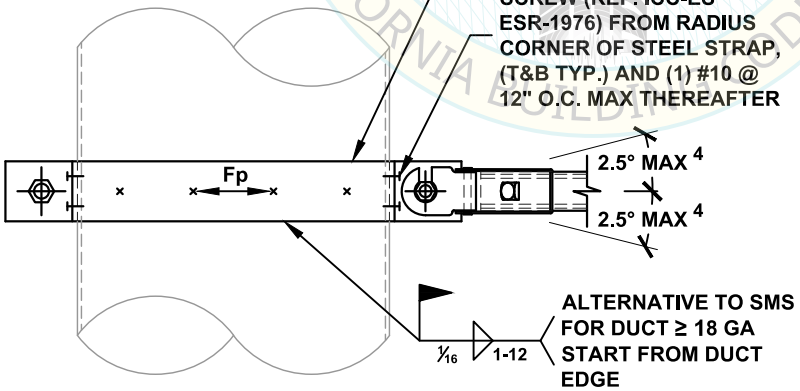

VIEW A-A

NOTES:

1. REF. SECTION A1 FOR GENERAL NOTES. MAX ALLOWABLE FORCE, Fp, MAY BE LIMITED BY ANCHORAGE CAPACITY.
2. PROVIDE ROD STIFFENER ONLY WHERE SEISMIC BRACKET IS ATTACHED TO THE ROD AND ROD LENGTH (L) EXCEEDS 31". REF. APPROPRIATE M10 PAGES FOR DETAIL.
3. PROVIDE (1) 1/2" DIA. CONNECTION IN CENTER HOLE WHEN STRUT BRACE IS INSTALLED INSIDE THE BRACKET AND (2) 1/2" DIA. CONNECTIONS IN (2) OUTER HOLES WHEN THE BRACE IS INSTALLED OUTSIDE OF THE BRACKET. REF. X2.3 FOR CONNECTION DETAILS.
4. ANGLE MAY BE INCREASED UP TO 15°, REF. PAGE A5.0

MASON WEST
1601 E. Miraloma Ave. Placentia, CA 92870
TEL (714) 630 - 0701, www.masonwest.com

Jiefu "Jeff" Zhang, SE
California SE No. S5270

HANGER ROD DIAMETER = 5/8"

ROUND DUCT LONGITUDINAL SEISMIC SOLID BRACING SYSTEM 60 PLF MAX

KIT OPTIONS
TSH54L
TSH5L

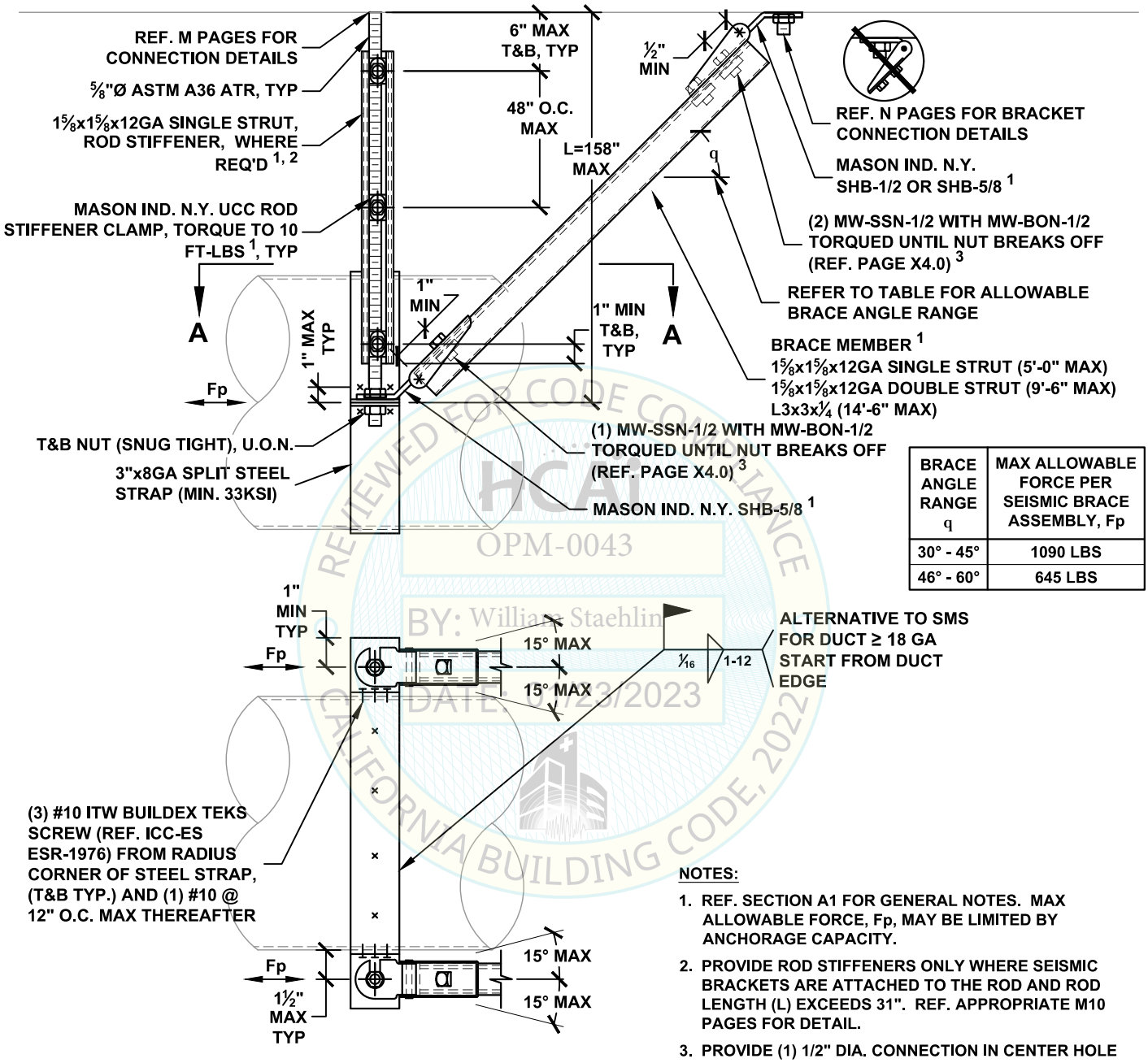

BRACE ANGLE RANGE q	MAX ALLOWABLE FORCE PER SEISMIC BRACE ASSEMBLY, Fp
30° - 45°	1090 LBS
46° - 60°	645 LBS

VIEW A-A

NOTES:

1. REF. SECTION A1 FOR GENERAL NOTES. MAX ALLOWABLE FORCE, Fp, MAY BE LIMITED BY ANCHORAGE CAPACITY.
2. PROVIDE ROD STIFFENERS ONLY WHERE SEISMIC BRACKETS ARE ATTACHED TO THE ROD AND ROD LENGTH (L) EXCEEDS 31". REF. APPROPRIATE M10 PAGES FOR DETAIL.
3. PROVIDE (1) 1/2" DIA. CONNECTION IN CENTER HOLE WHEN STRUT BRACE IS INSTALLED INSIDE THE BRACKET AND (2) 1/2" DIA. CONNECTIONS IN (2) OUTER HOLES WHEN THE BRACE IS INSTALLED OUTSIDE OF THE BRACKET. REF. X2.3 FOR CONNECTION DETAILS.

REVIEWED FOR CODE COMPLIANCE
HCAI
OPM-0043
BY: William Staehlin
UPDATED: 1/23/2023
CALIFORNIA BUILDING CODE, 2022

MASON WEST
1601 E. Miraloma Ave. Placentia, CA 92870
TEL (714) 630 - 0701, www.masonwest.com

Jiefu "Jeff" Zhang, SE
California SE No. S5270

PAGE
D2.31

HANGER ROD DIAMETER = 5/8"

ROUND DUCT ALL-DIRECTIONAL SEISMIC SOLID BRACING SYSTEM 60 PLF MAX

KIT OPTIONS
TSH54A
TSH5A

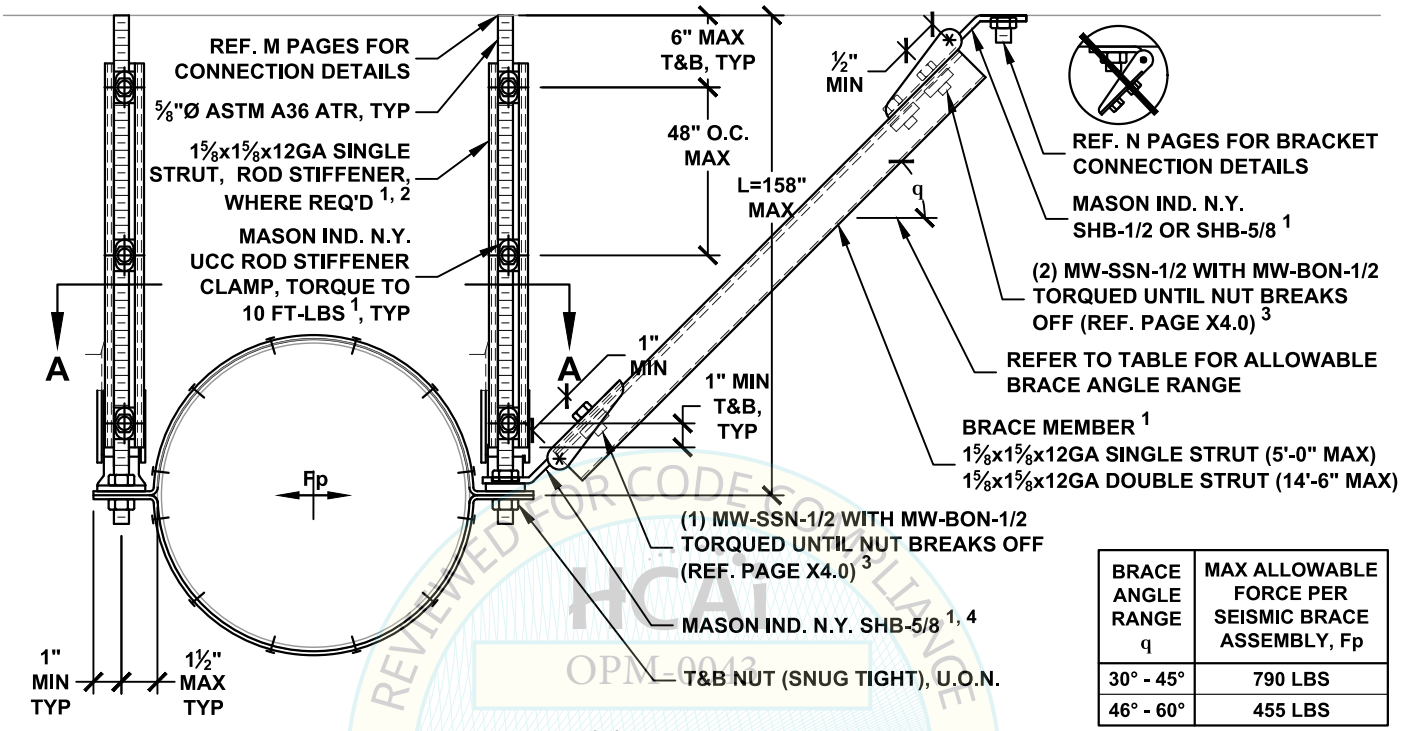

BRACE ANGLE RANGE q	MAX ALLOWABLE FORCE PER SEISMIC BRACE ASSEMBLY, Fp
30° - 45°	790 LBS
46° - 60°	455 LBS

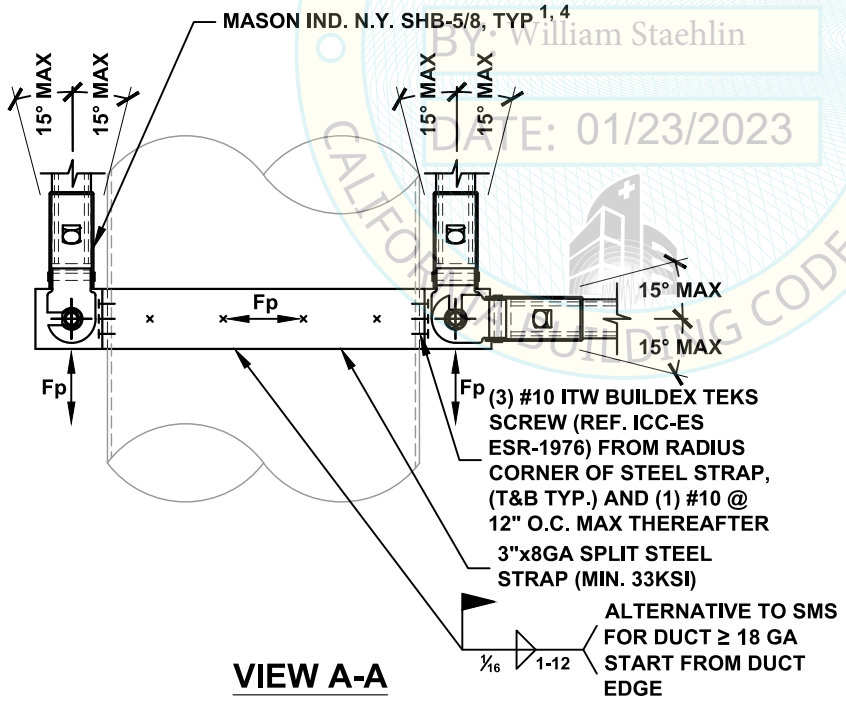

VIEW A-A

NOTES:

1. REF. SECTION A1 FOR GENERAL NOTES. MAX ALLOWABLE FORCE, Fp, MAY BE LIMITED BY ANCHORAGE CAPACITY.
2. PROVIDE ROD STIFFENERS ONLY WHERE SEISMIC BRACKETS ARE ATTACHED TO THE ROD AND ROD LENGTH (L) EXCEEDS 31". REF. APPROPRIATE M10 PAGES FOR DETAIL.
3. PROVIDE (1) 1/2" DIA. CONNECTION IN CENTER HOLE WHEN STRUT BRACE IS INSTALLED INSIDE THE BRACKET AND (2) 1/2" DIA. CONNECTIONS (2) OUTER HOLES WHEN THE BRACE IS INSTALLED OUTSIDE OF THE BRACKET. REF. X2.3 FOR CONNECTION DETAILS.
4. MW-KY-63 (REF. X2.4) MUST BE USED ON TOP OF BOTTOM SHB WHEN STACKING (2) SHB ON THE SAME ROD.

REVIEWED FOR CODE COMPLIANCE
HCAI
OPM-0043
BY: William Staehlin
DATE: 01/23/2023
CALIFORNIA BUILDING CODE 2022

MASON WEST
1601 E. Miraloma Ave. Placentia, CA 92870
TEL (714) 630 - 0701, www.masonwest.com

Jiefu "Jeff" Zhang, SE
California SE No. S5270

PAGE
D2.32

HANGER ROD DIAMETER = 3/8"	FACTORY BUILT VENT DUCT TRANSVERSE SEISMIC SOLID BRACING SYSTEM 30 PLF MAX	KIT OPTIONS TS12T TS1220T TSH312T TSH320T

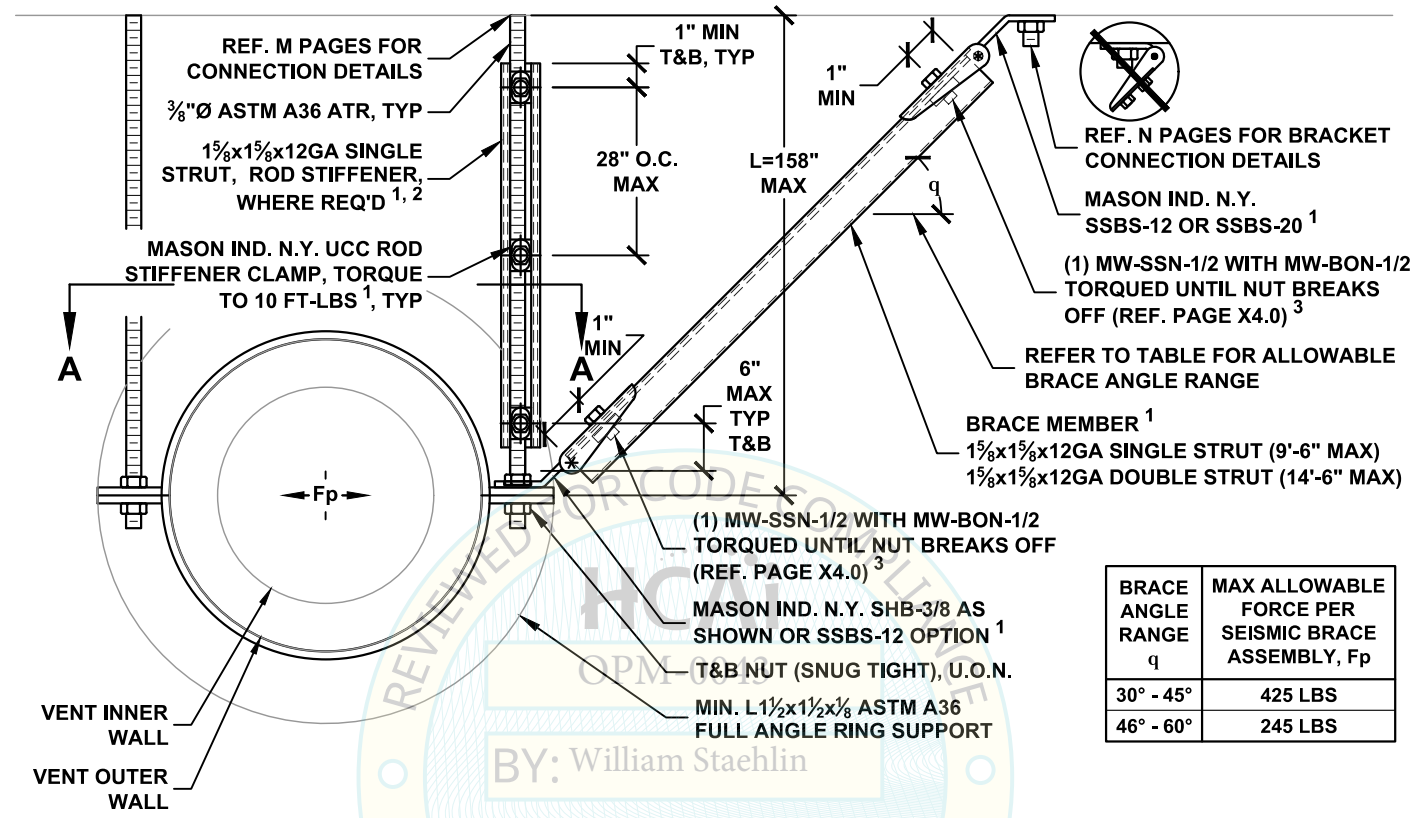

BRACE ANGLE RANGE q	MAX ALLOWABLE FORCE PER SEISMIC BRACE ASSEMBLY, Fp
30° - 45°	425 LBS
46° - 60°	245 LBS

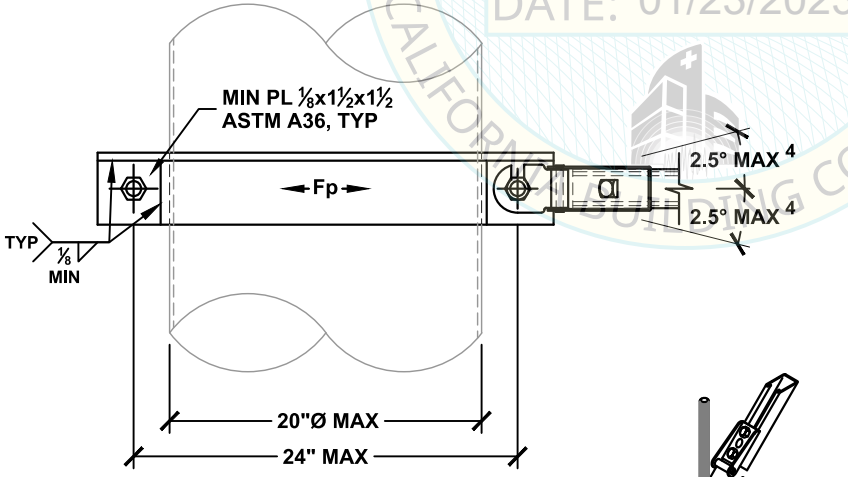

VIEW A-A

SSBS OPTION

NOTES:

1. REF. SECTION A1 FOR GENERAL NOTES.
2. PROVIDE ROD STIFFENER ONLY WHERE SEISMIC BRACKET IS ATTACHED TO THE ROD AND ROD LENGTH (L) EXCEEDS 18". REF. APPROPRIATE M10 PAGES FOR DETAIL.
3. PROVIDE (1) 1/2" DIA. CONNECTION IN CENTER HOLE WHEN STRUT BRACE IS INSTALLED INSIDE THE BRACKET AND (2) 1/2" DIA. CONNECTIONS IN (2) OUTER HOLES WHEN THE BRACE IS INSTALLED OUTSIDE OF THE BRACKET. REF. X2.3 FOR CONNECTION DETAILS.
4. ANGLE MAY BE INCREASED UP TO 15°, REF. PAGE A5.0.

REVIEWED FOR CODE COMPLIANCE
HCAI
OPM-0043
BY: William Staehlin
DATE: 01/23/2023
CALIFORNIA BUILDING CODE, 2022

MASON WEST
1601 E. Miraloma Ave. Placentia, CA 92870
TEL (714) 630 - 0701, www.masonwest.com

Jiefu "Jeff" Zhang, SE
California SE No. S5270

PAGE
D3.10

HANGER ROD DIAMETER = ⅜"

FACTORY BUILT VENT DUCT LONGITUDINAL SEISMIC SOLID BRACING SYSTEM 30 PLF MAX

KIT OPTIONS
TS12L
TS1220L
TSH312L
TSH320L

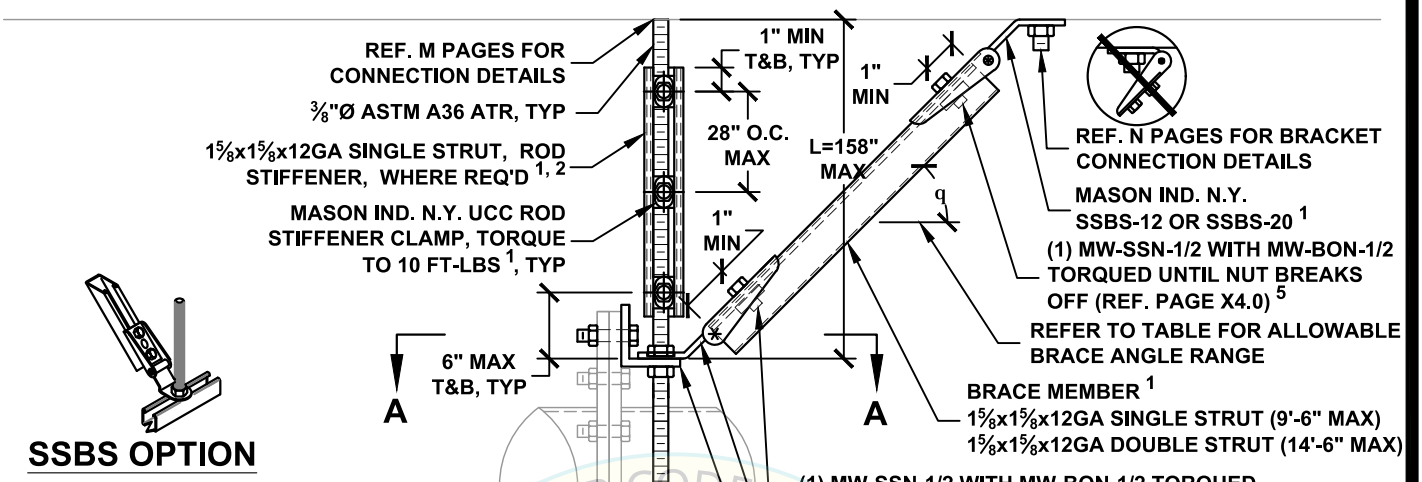

SSBS OPTION

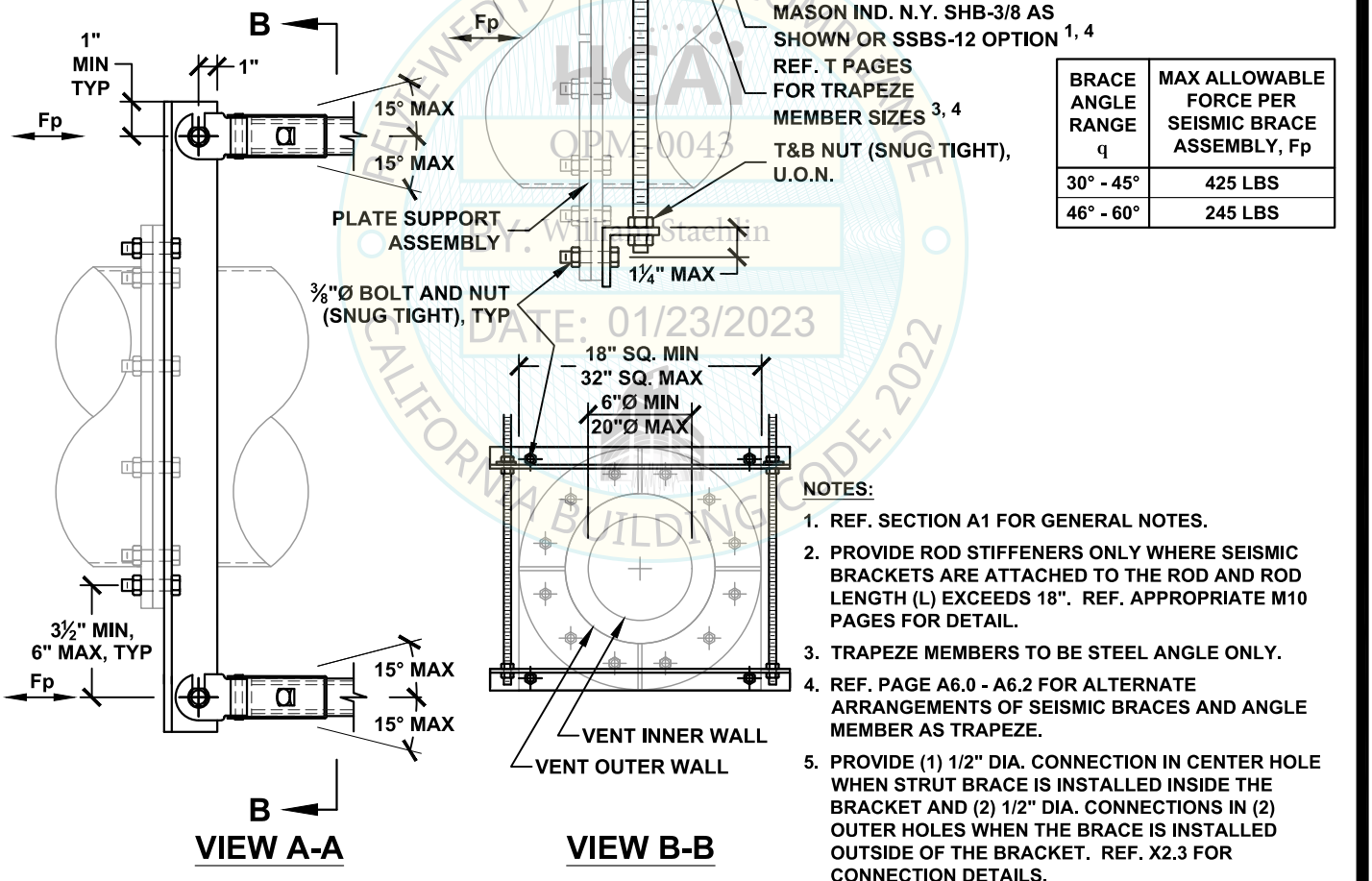

BRACE ANGLE RANGE q	MAX ALLOWABLE FORCE PER SEISMIC BRACE ASSEMBLY, Fp
30° - 45°	425 LBS
46° - 60°	245 LBS

VIEW A-A

VIEW B-B

REVIEWED FOR CODE COMPLIANCE
HCAI
OPM-0043
BY: William Staehlin
DATE: 01/23/2023
CALIFORNIA BUILDING CODE, 2022

NOTES:

1. REF. SECTION A1 FOR GENERAL NOTES.
2. PROVIDE ROD STIFFENERS ONLY WHERE SEISMIC BRACKETS ARE ATTACHED TO THE ROD AND ROD LENGTH (L) EXCEEDS 18". REF. APPROPRIATE M10 PAGES FOR DETAIL.
3. TRAPEZE MEMBERS TO BE STEEL ANGLE ONLY.
4. REF. PAGE A6.0 - A6.2 FOR ALTERNATE ARRANGEMENTS OF SEISMIC BRACES AND ANGLE MEMBER AS TRAPEZE.
5. PROVIDE (1) 1/2" DIA. CONNECTION IN CENTER HOLE WHEN STRUT BRACE IS INSTALLED INSIDE THE BRACKET AND (2) 1/2" DIA. CONNECTIONS IN (2) OUTER HOLES WHEN THE BRACE IS INSTALLED OUTSIDE OF THE BRACKET. REF. X2.3 FOR CONNECTION DETAILS.

MASON WEST
1601 E. Miraloma Ave. Placentia, CA 92870
TEL (714) 630 - 0701, www.masonwest.com

Jiefu "Jeff" Zhang, SE
California SE No. S5270

PAGE
D3.11

HANGER ROD DIAMETER = 3/8"	FACTORY BUILT VENT DUCT ALL-DIRECTIONAL SEISMIC SOLID BRACING SYSTEM 30 PLF MAX	KIT OPTIONS TS12A TS1220A TSH312A TSH320A

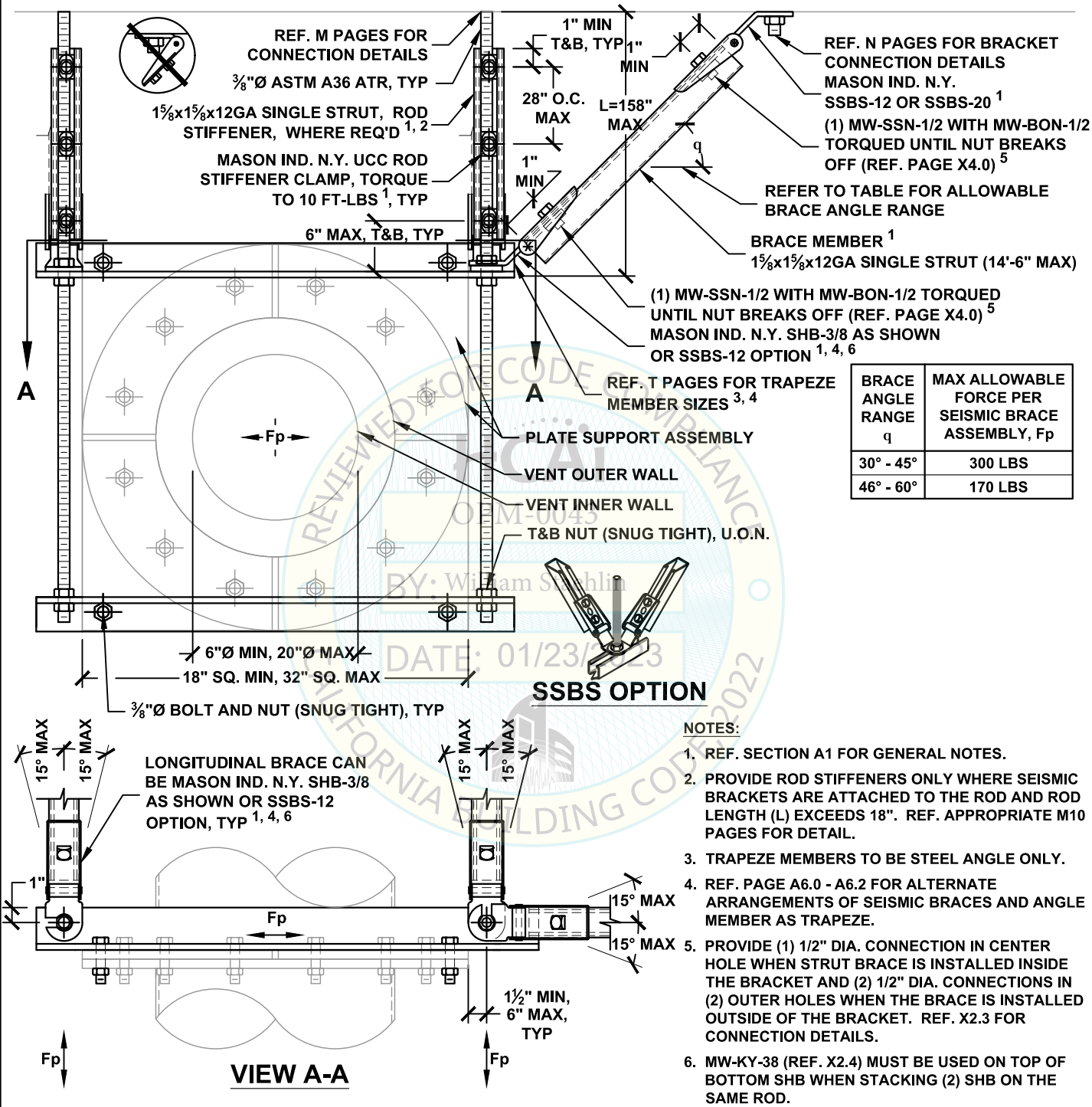

BRACE ANGLE RANGE q	MAX ALLOWABLE FORCE PER SEISMIC BRACE ASSEMBLY, Fp
30° - 45°	300 LBS
46° - 60°	170 LBS

NOTES:

1. REF. SECTION A1 FOR GENERAL NOTES.
2. PROVIDE ROD STIFFENERS ONLY WHERE SEISMIC BRACKETS ARE ATTACHED TO THE ROD AND ROD LENGTH (L) EXCEEDS 18". REF. APPROPRIATE M10 PAGES FOR DETAIL.
3. TRAPEZE MEMBERS TO BE STEEL ANGLE ONLY.
4. REF. PAGE A6.0 - A6.2 FOR ALTERNATE ARRANGEMENTS OF SEISMIC BRACES AND ANGLE MEMBER AS TRAPEZE.
5. PROVIDE (1) 1/2" DIA. CONNECTION IN CENTER HOLE WHEN STRUT BRACE IS INSTALLED INSIDE THE BRACKET AND (2) 1/2" DIA. CONNECTIONS IN (2) OUTER HOLES WHEN THE BRACE IS INSTALLED OUTSIDE OF THE BRACKET. REF. X2.3 FOR CONNECTION DETAILS.
6. MW-KY-38 (REF. X2.4) MUST BE USED ON TOP OF BOTTOM SHB WHEN STACKING (2) SHB ON THE SAME ROD.

REVIEWED FOR CODE COMPLIANCE
ICC-ES
OPM-0043
BY: William Staehlin
DATE: 01/23/2023
CALIFORNIA BUILDING CODE 2022

MASON WEST
1601 E. Miraloma Ave. Placentia, CA 92870
TEL (714) 630 - 0701, www.masonwest.com

Jiefu "Jeff" Zhang, SE
California SE No. S5270

PAGE
D3.12

HANGER ROD DIAMETER = ½"	FACTORY BUILT VENT DUCT TRANSVERSE SEISMIC SOLID BRACING SYSTEM 60 PLF MAX	KIT OPTIONS TSH4T

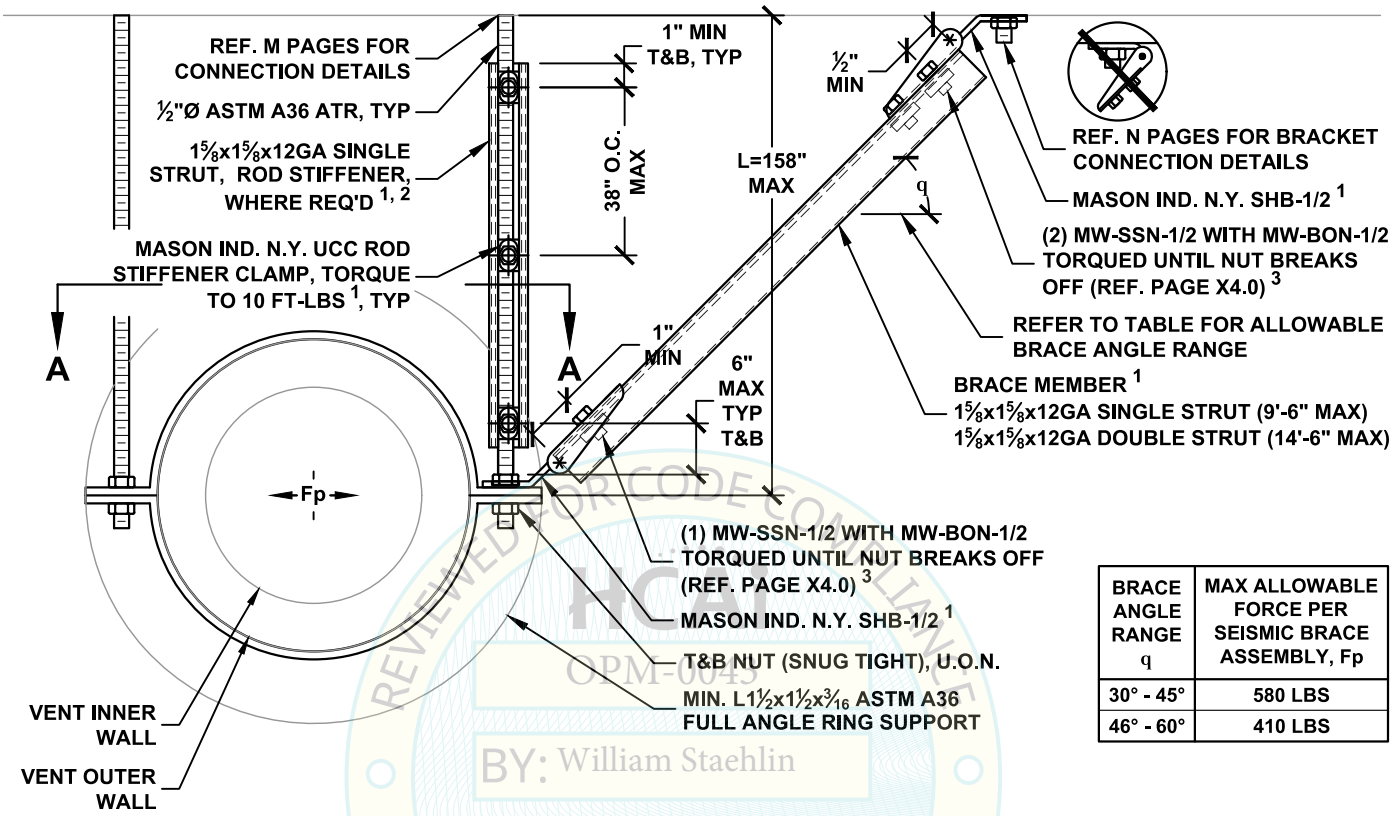

BRACE ANGLE RANGE q	MAX ALLOWABLE FORCE PER SEISMIC BRACE ASSEMBLY, Fp
30° - 45°	580 LBS
46° - 60°	410 LBS

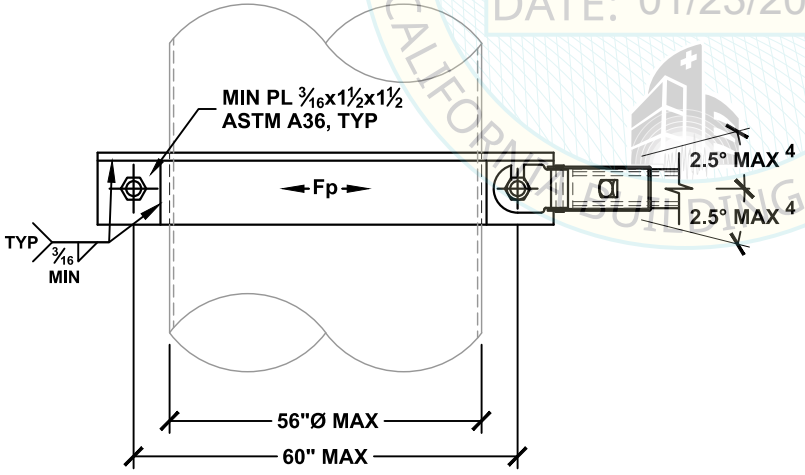

VIEW A-A

NOTES:

1. REF. SECTION A1 FOR GENERAL NOTES.
2. PROVIDE ROD STIFFENER ONLY WHERE SEISMIC BRACKET IS ATTACHED TO THE ROD AND ROD LENGTH (L) EXCEEDS 25". REF. APPROPRIATE M10 PAGES FOR DETAIL.
3. PROVIDE (1) 1/2" DIA. CONNECTION IN CENTER HOLE WHEN STRUT BRACE IS INSTALLED INSIDE THE BRACKET AND (2) 1/2" DIA. CONNECTIONS IN (2) OUTER HOLES WHEN THE BRACE IS INSTALLED OUTSIDE OF THE BRACKET. REF. X2.3 FOR CONNECTION DETAILS.
4. ANGLE MAY BE INCREASED UP TO 15°, REF. PAGE A5.0.

REVIEWED FOR CODE COMPLIANCE
HCAI
OPM-0043
BY: William Staehlin
DATE: 01/23/2023
CALIFORNIA BUILDING CODE, 2022

MASON WEST
1601 E. Miraloma Ave. Placentia, CA 92870
TEL (714) 630 - 0701, www.masonwest.com

Jiefu "Jeff" Zhang, SE
California SE No. S5270

PAGE
D3.20

HANGER ROD DIAMETER = ½"	FACTORY BUILT VENT DUCT LONGITUDINAL SEISMIC SOLID BRACING SYSTEM 60 PLF MAX	KIT OPTIONS TSH4L

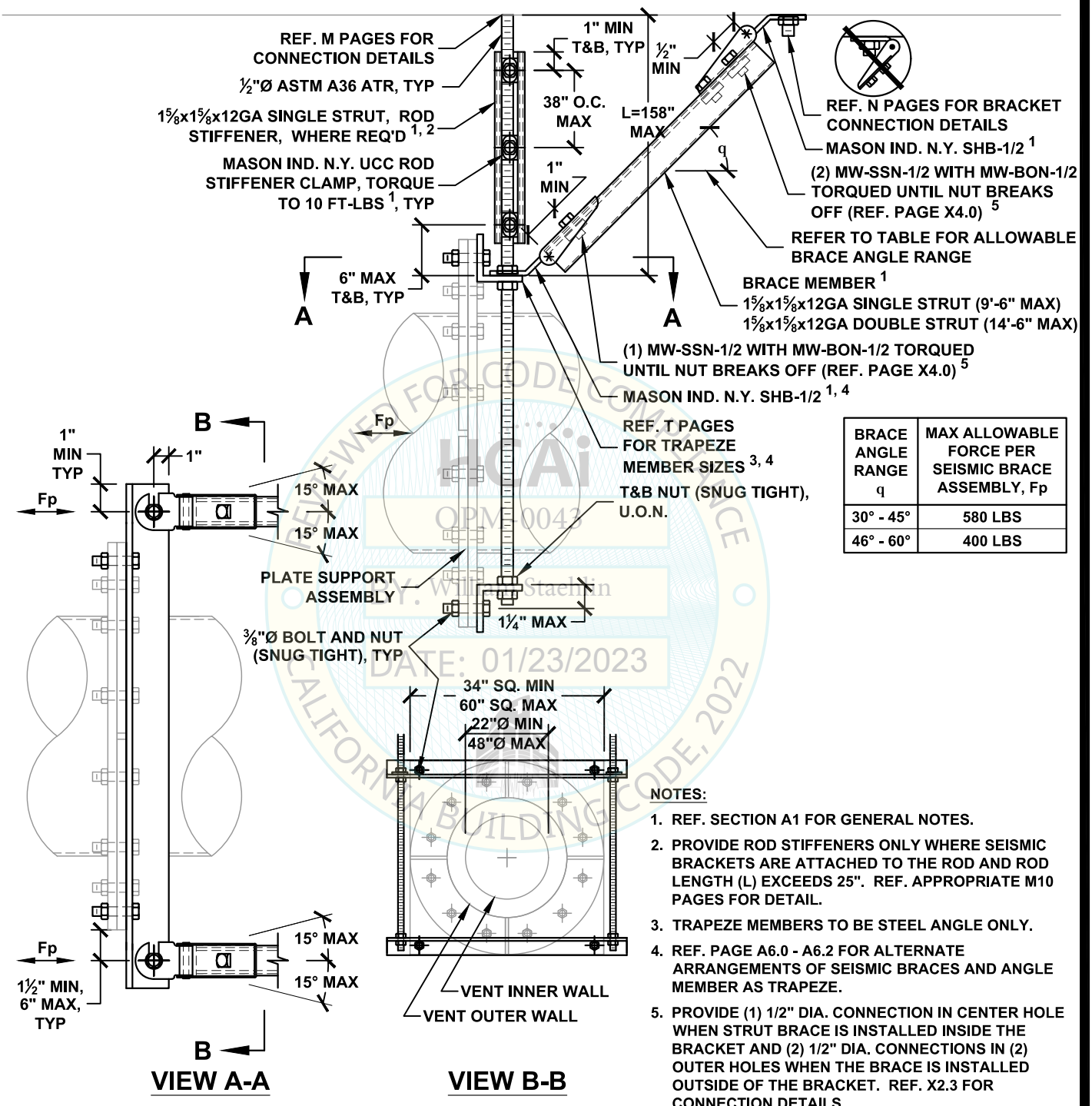

BRACE ANGLE RANGE q	MAX ALLOWABLE FORCE PER SEISMIC BRACE ASSEMBLY, Fp
30° - 45°	580 LBS
46° - 60°	400 LBS

REVIEWED FOR CODE COMPLIANCE
HCAi
OPM-0043
BY: William Staehlin
DATE: 01/23/2023
CALIFORNIA BUILDING CODE, 2022

NOTES:

1. REF. SECTION A1 FOR GENERAL NOTES.
2. PROVIDE ROD STIFFENERS ONLY WHERE SEISMIC BRACKETS ARE ATTACHED TO THE ROD AND ROD LENGTH (L) EXCEEDS 25". REF. APPROPRIATE M10 PAGES FOR DETAIL.
3. TRAPEZE MEMBERS TO BE STEEL ANGLE ONLY.
4. REF. PAGE A6.0 - A6.2 FOR ALTERNATE ARRANGEMENTS OF SEISMIC BRACES AND ANGLE MEMBER AS TRAPEZE.
5. PROVIDE (1) 1/2" DIA. CONNECTION IN CENTER HOLE WHEN STRUT BRACE IS INSTALLED INSIDE THE BRACKET AND (2) 1/2" DIA. CONNECTIONS IN (2) OUTER HOLES WHEN THE BRACE IS INSTALLED OUTSIDE OF THE BRACKET. REF. X2.3 FOR CONNECTION DETAILS.

MASON WEST
1601 E. Miraloma Ave. Placentia, CA 92870
TEL (714) 630 - 0701, www.masonwest.com

Jiefu "Jeff" Zhang, SE
California SE No. S5270

PAGE
D3.21

HANGER ROD DIAMETER = ½"	FACTORY BUILT VENT DUCT ALL-DIRECTIONAL SEISMIC SOLID BRACING SYSTEM 60 PLF MAX	KIT OPTIONS TSH4A

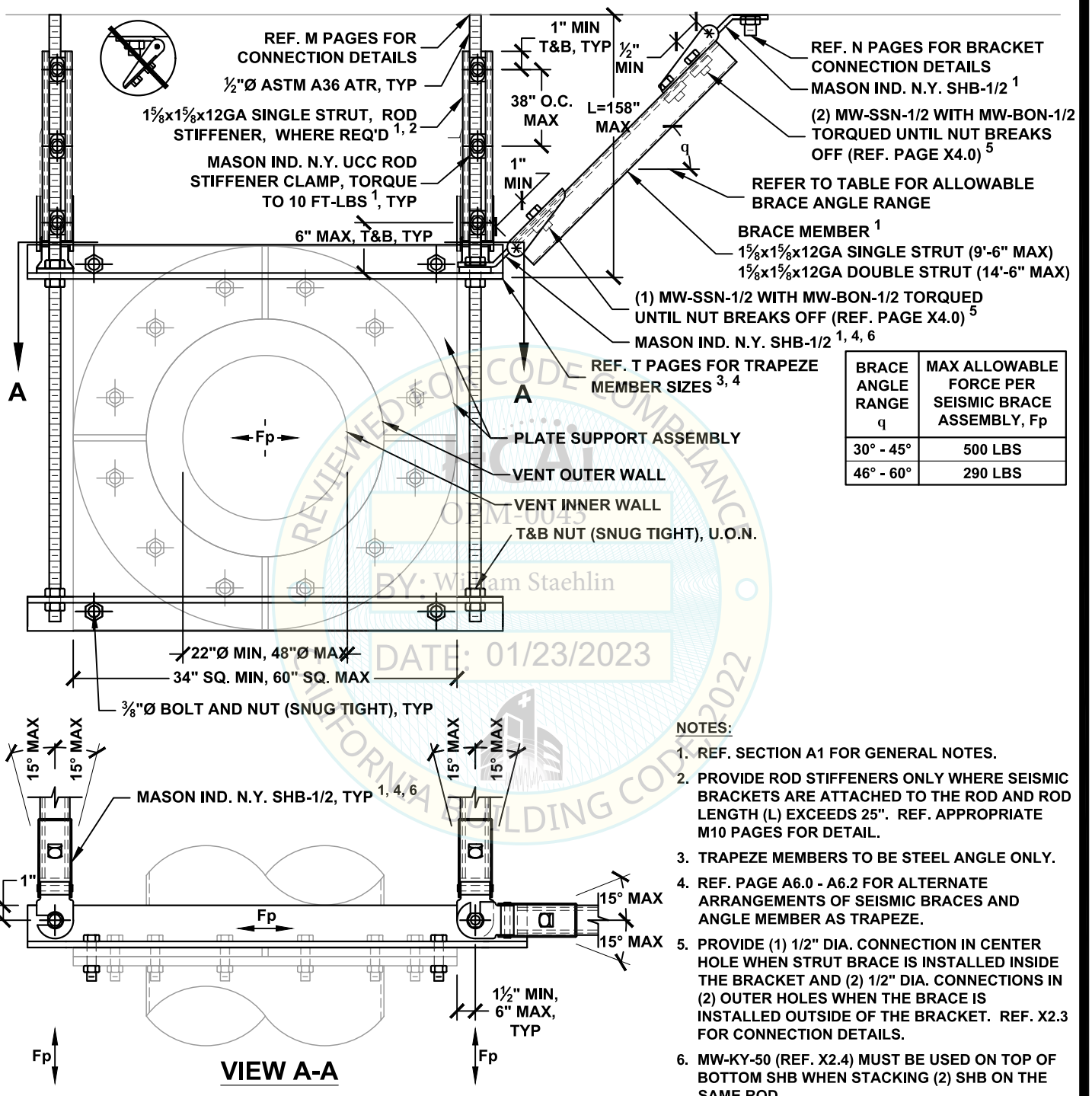

VIEW A-A

BRACE ANGLE RANGE q	MAX ALLOWABLE FORCE PER SEISMIC BRACE ASSEMBLY, Fp
30° - 45°	500 LBS
46° - 60°	290 LBS

REVIEWED FOR CODE COMPLIANCE
CALIFORNIA BUILDING CODE 2022
OPM-0043
BY: William Staehlin
DATE: 01/23/2023

NOTES:

1. REF. SECTION A1 FOR GENERAL NOTES.
2. PROVIDE ROD STIFFENERS ONLY WHERE SEISMIC BRACKETS ARE ATTACHED TO THE ROD AND ROD LENGTH (L) EXCEEDS 25". REF. APPROPRIATE M10 PAGES FOR DETAIL.
3. TRAPEZE MEMBERS TO BE STEEL ANGLE ONLY.
4. REF. PAGE A6.0 - A6.2 FOR ALTERNATE ARRANGEMENTS OF SEISMIC BRACES AND ANGLE MEMBER AS TRAPEZE.
5. PROVIDE (1) 1/2" DIA. CONNECTION IN CENTER HOLE WHEN STRUT BRACE IS INSTALLED INSIDE THE BRACKET AND (2) 1/2" DIA. CONNECTIONS IN (2) OUTER HOLES WHEN THE BRACE IS INSTALLED OUTSIDE OF THE BRACKET. REF. X2.3 FOR CONNECTION DETAILS.
6. MW-KY-50 (REF. X2.4) MUST BE USED ON TOP OF BOTTOM SHB WHEN STACKING (2) SHB ON THE SAME ROD.

MASON WEST
1601 E. Miraloma Ave. Placentia, CA 92870
TEL (714) 630 - 0701, www.masonwest.com

Jiefu "Jeff" Zhang, SE
California SE No. S5270

PAGE
D3.22

HANGER ROD DIAMETER = 3/8"	RECTANGULAR DUCT TRANSVERSE SEISMIC CABLE BRACING SYSTEM 30 PLF MAX	KIT OPTIONS TC0T

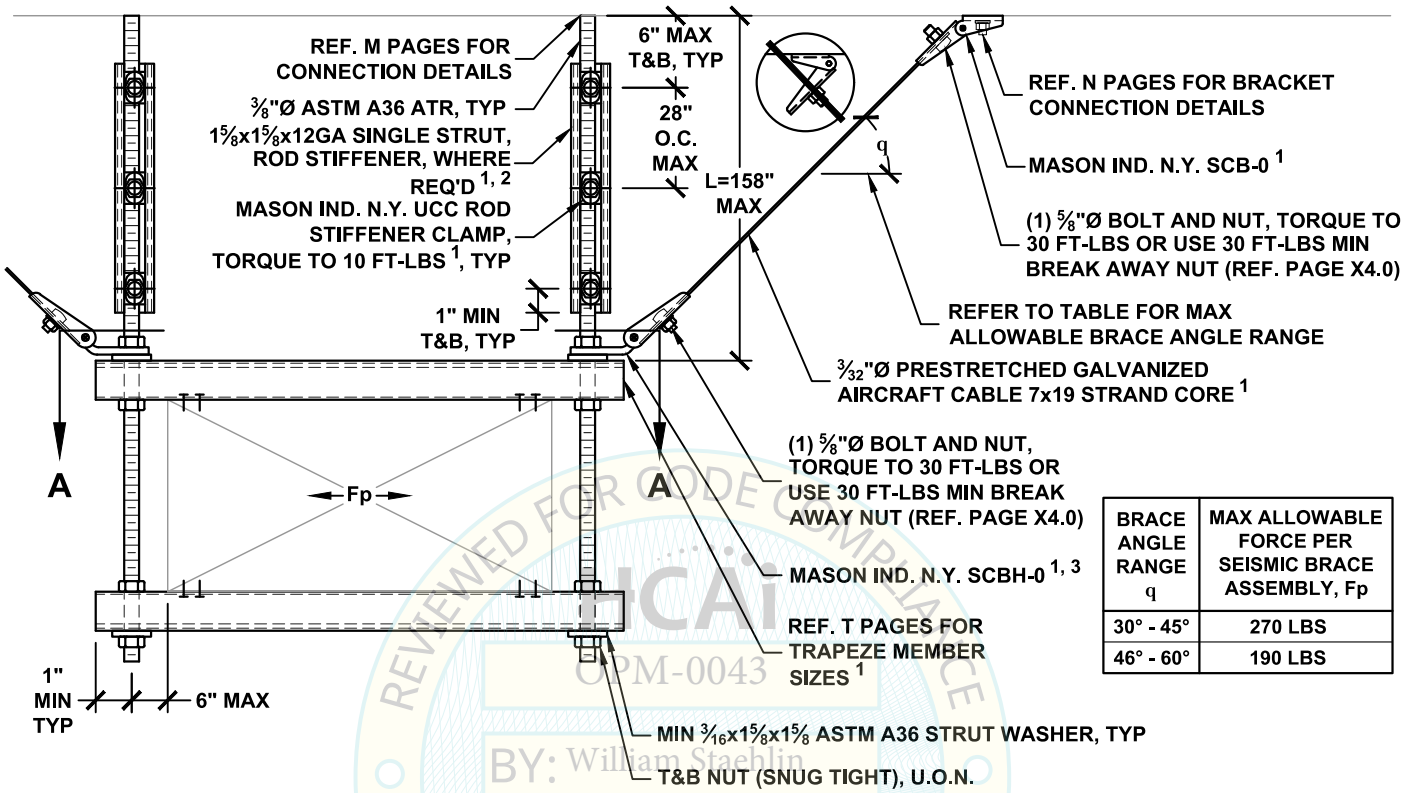

BRACE ANGLE RANGE q	MAX ALLOWABLE FORCE PER SEISMIC BRACE ASSEMBLY, Fp
30° - 45°	270 LBS
46° - 60°	190 LBS

REVIEWED FOR CODE COMPLIANCE
HCAi
OPM-0043
BY: William Staehlin
DATE: 01/23/2023
CALIFORNIA BUILDING CODE, 2022

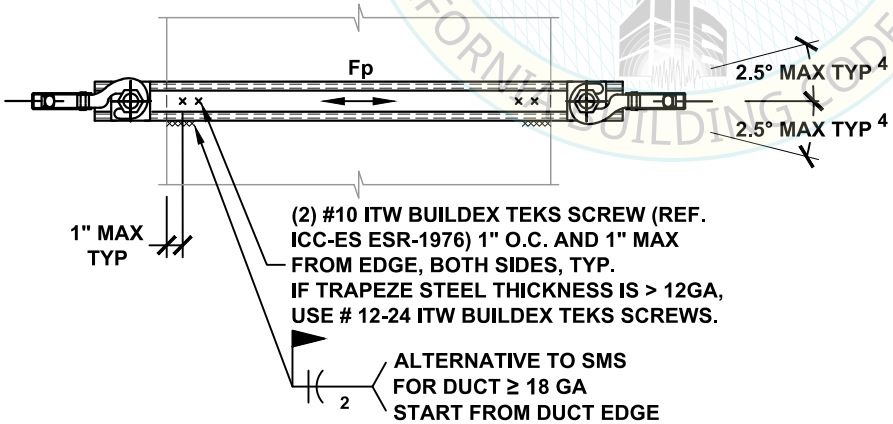

VIEW A-A

NOTES:

1. REF. SECTION A1 FOR GENERAL NOTES.
2. PROVIDE ROD STIFFENERS ONLY WHERE SEISMIC BRACKETS ARE ATTACHED TO THE ROD AND ROD LENGTH (L) EXCEEDS 18". REF. APPROPRIATE M10 PAGES FOR DETAIL.
3. REF. PAGE A6.0 - A6.2 FOR ALTERNATE ARRANGEMENTS OF SEISMIC BRACES AND ANGLE OR HSS MEMBER AS TRAPEZE.
4. ANGLE MAY BE INCREASED TO 15°, REF. PAGE A5.0.

MASON WEST
1601 E. Miraloma Ave. Placentia, CA 92870
TEL (714) 630 - 0701, www.masonwest.com

Jiefu "Jeff" Zhang, SE
California SE No. S5270

PAGE
D4.10

HANGER ROD DIAMETER = 3/8"	RECTANGULAR DUCT LONGITUDINAL SEISMIC CABLE BRACING SYSTEM 30 PLF MAX	KIT OPTIONS TC0L

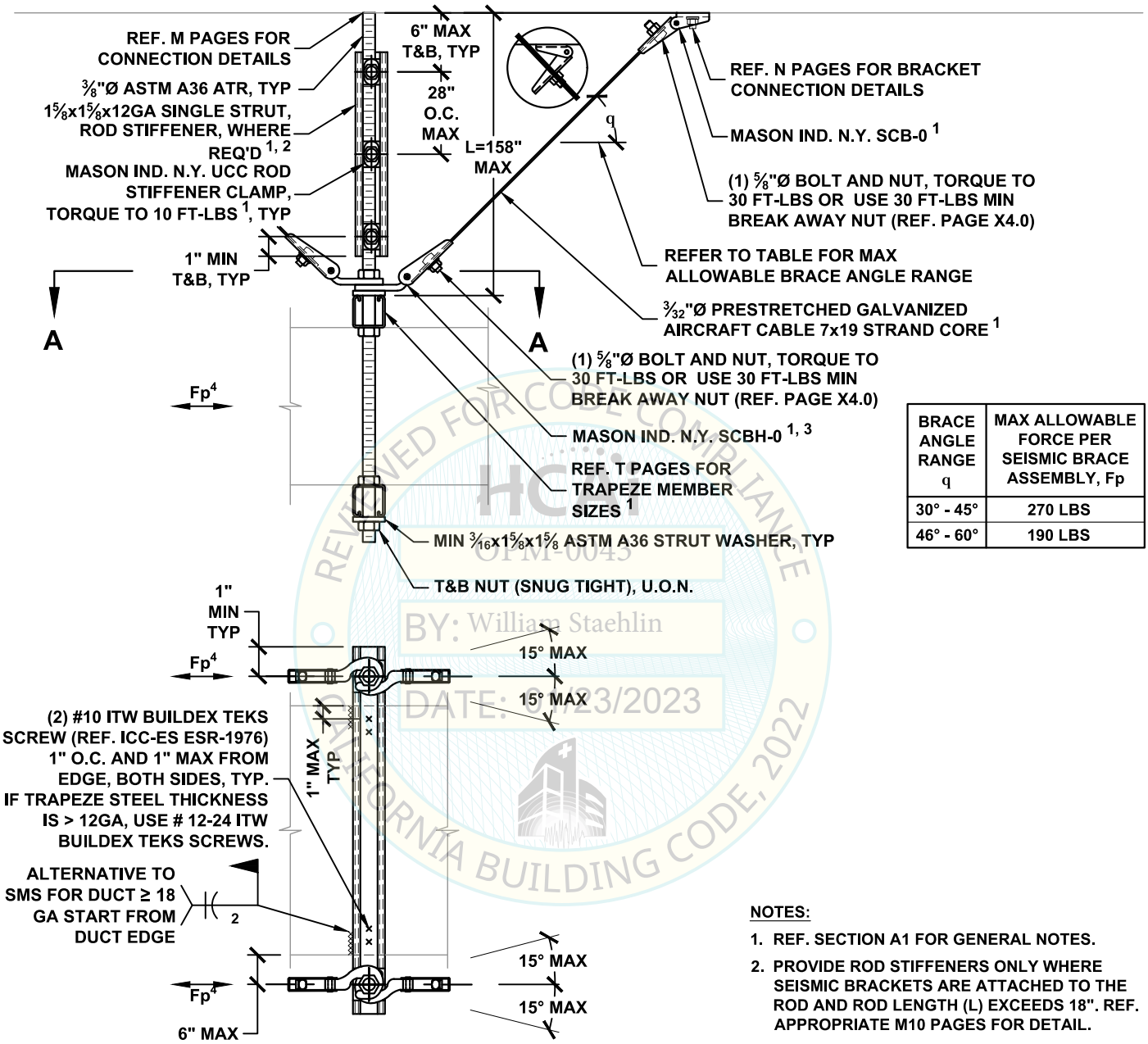

BRACE ANGLE RANGE q	MAX ALLOWABLE FORCE PER SEISMIC BRACE ASSEMBLY, Fp
30° - 45°	270 LBS
46° - 60°	190 LBS

VIEW A-A

NOTES:

1. REF. SECTION A1 FOR GENERAL NOTES.
2. PROVIDE ROD STIFFENERS ONLY WHERE SEISMIC BRACKETS ARE ATTACHED TO THE ROD AND ROD LENGTH (L) EXCEEDS 18". REF. APPROPRIATE M10 PAGES FOR DETAIL.
3. REF. PAGE A6.0 - A6.2 FOR ALTERNATE ARRANGEMENTS OF SEISMIC BRACES AND ANGLE OR HSS MEMBER AS TRAPEZE.
4. DESIGN PROFESSIONAL SHALL CONSIDER ECCENTRIC LOAD DISTRIBUTION WHEN DETERMINING THE Fp VALUE USED IN DESIGN.

REVIEWED FOR CODE COMPLIANCE
OPM-0043
BY: William Staehlin
DATE: 1/23/2023
CALIFORNIA BUILDING CODE, 2022

MASON WEST
1601 E. Miraloma Ave. Placentia, CA 92870
TEL (714) 630 - 0701, www.masonwest.com

Jiefu "Jeff" Zhang, SE
California SE No. S5270

PAGE
D4.11

HANGER ROD DIAMETER = 3/8"	RECTANGULAR DUCT ALL-DIRECTIONAL SEISMIC CABLE BRACING SYSTEM 30 PLF MAX	KIT OPTIONS TC0A

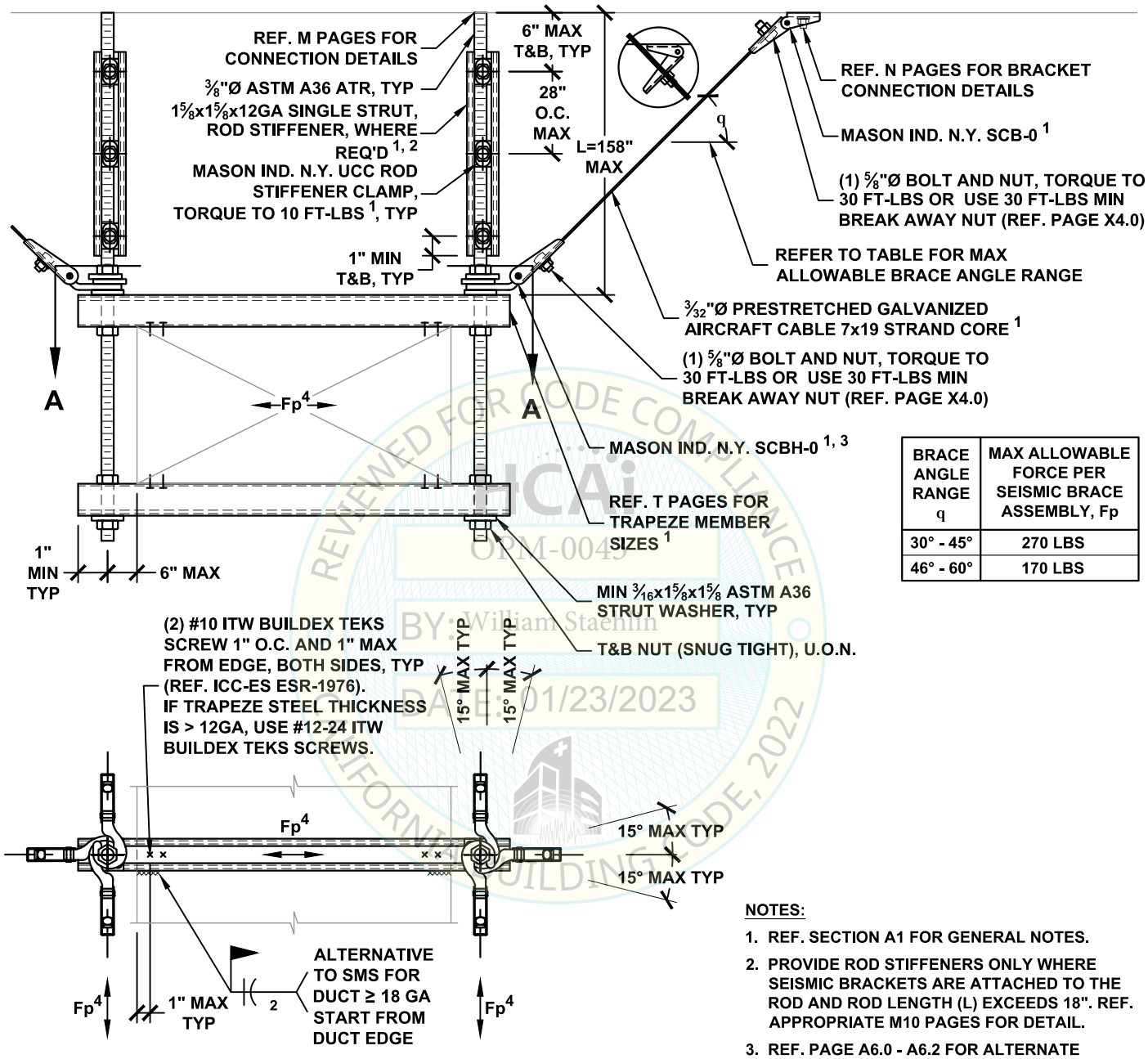

BRACE ANGLE RANGE q	MAX ALLOWABLE FORCE PER SEISMIC BRACE ASSEMBLY, Fp
30° - 45°	270 LBS
46° - 60°	170 LBS

VIEW A-A

NOTES:

1. REF. SECTION A1 FOR GENERAL NOTES.
2. PROVIDE ROD STIFFENERS ONLY WHERE SEISMIC BRACKETS ARE ATTACHED TO THE ROD AND ROD LENGTH (L) EXCEEDS 18". REF. APPROPRIATE M10 PAGES FOR DETAIL.
3. REF. PAGE A6.0 - A6.2 FOR ALTERNATE ARRANGEMENTS OF SEISMIC BRACES AND ANGLE OR HSS MEMBER AS TRAPEZE.
4. DESIGN PROFESSIONAL SHALL CONSIDER ECCENTRIC LOAD DISTRIBUTION WHEN DETERMINING THE Fp VALUE USED IN DESIGN.

REVIEWED FOR CODE COMPLIANCE
OPM-0043
BY: William Staehlin
DATE: 01/23/2023
CALIFORNIA BUILDING CODE, 2022

MASON WEST
1601 E. Miraloma Ave. Placentia, CA 92870
TEL (714) 630 - 0701, www.masonwest.com

Jiefu "Jeff" Zhang, SE
California SE No. S5270

PAGE
D4.12

HANGER ROD DIAMETER = ½"	RECTANGULAR DUCT TRANSVERSE SEISMIC CABLE BRACING SYSTEM 60 PLF MAX	KIT OPTIONS TC1T

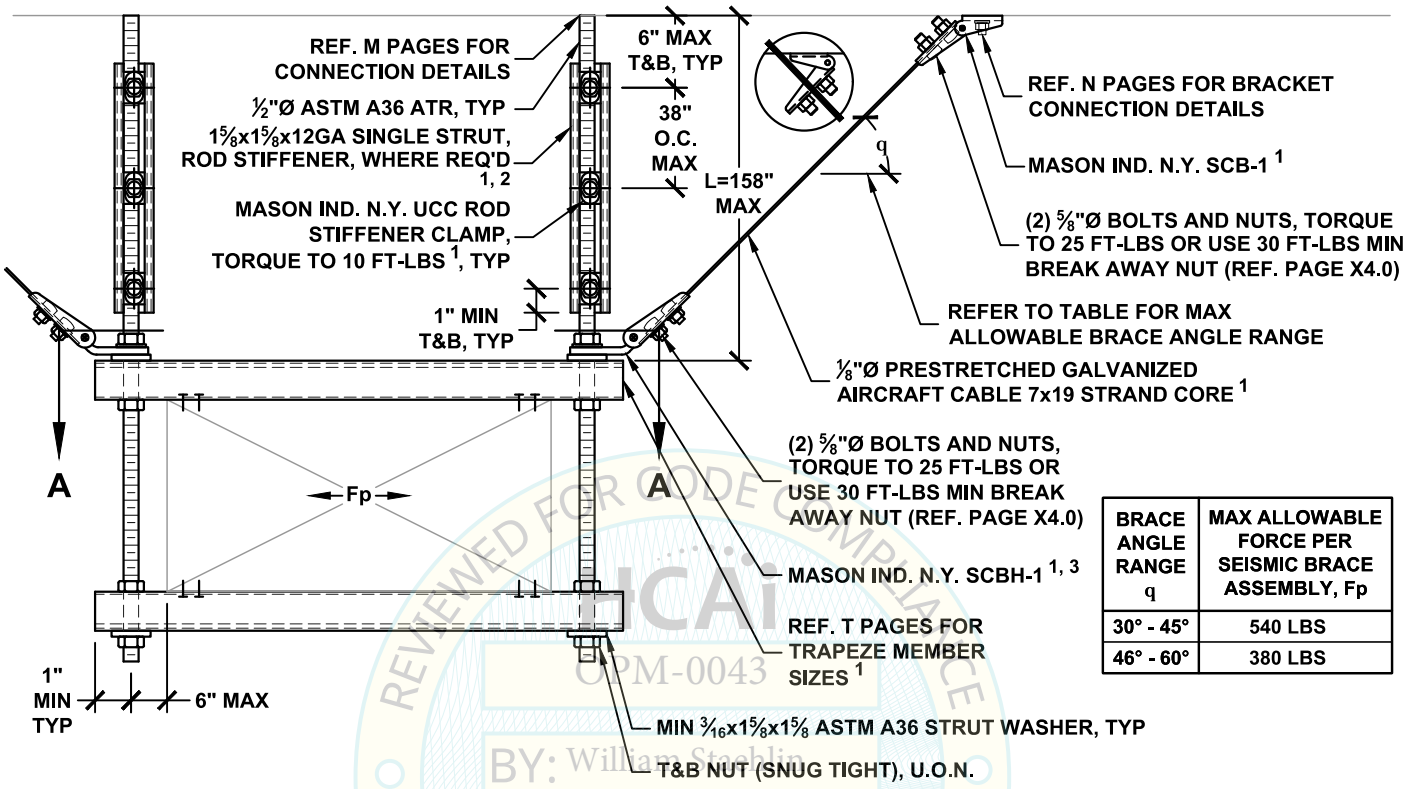

BRACE ANGLE RANGE q	MAX ALLOWABLE FORCE PER SEISMIC BRACE ASSEMBLY, Fp
30° - 45°	540 LBS
46° - 60°	380 LBS

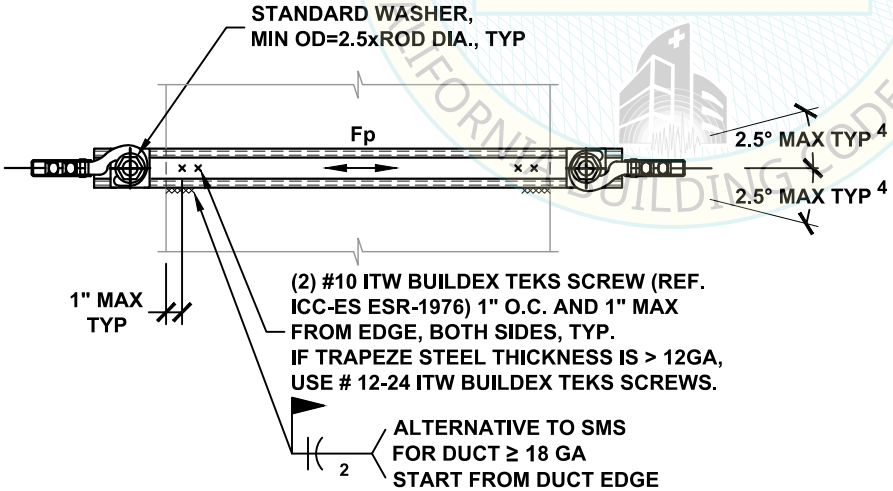

VIEW A-A

NOTES:

1. REF. SECTION A1 FOR GENERAL NOTES.
2. PROVIDE ROD STIFFENERS ONLY WHERE SEISMIC BRACKETS ARE ATTACHED TO THE ROD AND ROD LENGTH (L) EXCEEDS 25". REF. APPROPRIATE M10 PAGES FOR DETAIL.
3. REF. PAGE A6.0 - A6.2 FOR ALTERNATE ARRANGEMENTS OF SEISMIC BRACES AND ANGLE OR HSS MEMBER AS TRAPEZE.
4. ANGLE MAY BE INCREASED TO 15°, REF. PAGE A5.0.

REVIEWED FOR CODE COMPLIANCE
HCAi
OPM-0043
BY: William Staehlin
DATE: 01/23/2023
CALIFORNIA BUILDING CODE, 2022

MASON WEST
1601 E. Miraloma Ave. Placentia, CA 92870
TEL (714) 630 - 0701, www.masonwest.com

Jiefu "Jeff" Zhang, SE
California SE No. S5270

HANGER ROD DIAMETER = ½"	RECTANGULAR DUCT LONGITUDINAL SEISMIC CABLE BRACING SYSTEM 60 PLF MAX	KIT OPTIONS TC1L

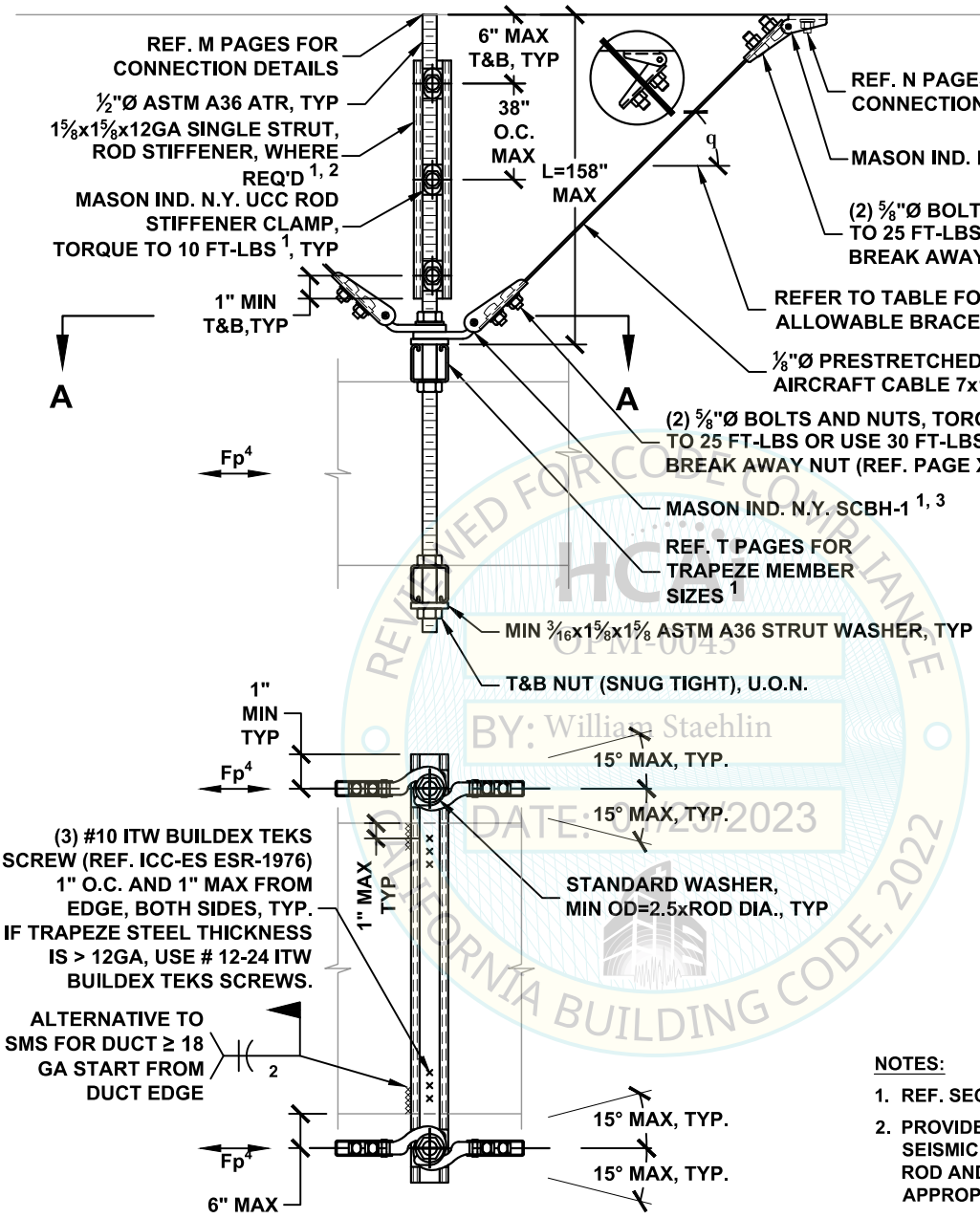

BRACE ANGLE RANGE q	MAX ALLOWABLE FORCE PER SEISMIC BRACE ASSEMBLY, Fp
30° - 45°	540 LBS
46° - 60°	380 LBS

VIEW A-A

NOTES:

1. REF. SECTION A1 FOR GENERAL NOTES.
2. PROVIDE ROD STIFFENERS ONLY WHERE SEISMIC BRACKETS ARE ATTACHED TO THE ROD AND ROD LENGTH (L) EXCEEDS 25". REF. APPROPRIATE M10 PAGES FOR DETAIL.
3. REF. PAGE A6.0 - A6.2 FOR ALTERNATE ARRANGEMENTS OF SEISMIC BRACES AND ANGLE OR HSS MEMBER AS TRAPEZE.
4. DESIGN PROFESSIONAL SHALL CONSIDER ECCENTRIC LOAD DISTRIBUTION WHEN DETERMINING THE Fp VALUE USED IN DESIGN.

REVIEWED FOR CODE COMPLIANCE
OPM-0043
BY: William Staehlin
DATE: 01/23/2023
CALIFORNIA BUILDING CODE, 2022

MASON WEST
1601 E. Miraloma Ave. Placentia, CA 92870
TEL (714) 630 - 0701, www.masonwest.com

Jiefu "Jeff" Zhang, SE
California SE No. S5270

PAGE
D4.21

HANGER ROD DIAMETER = ½"	RECTANGULAR DUCT ALL-DIRECTIONAL SEISMIC CABLE BRACING SYSTEM 60 PLF MAX	KIT OPTIONS TC1A

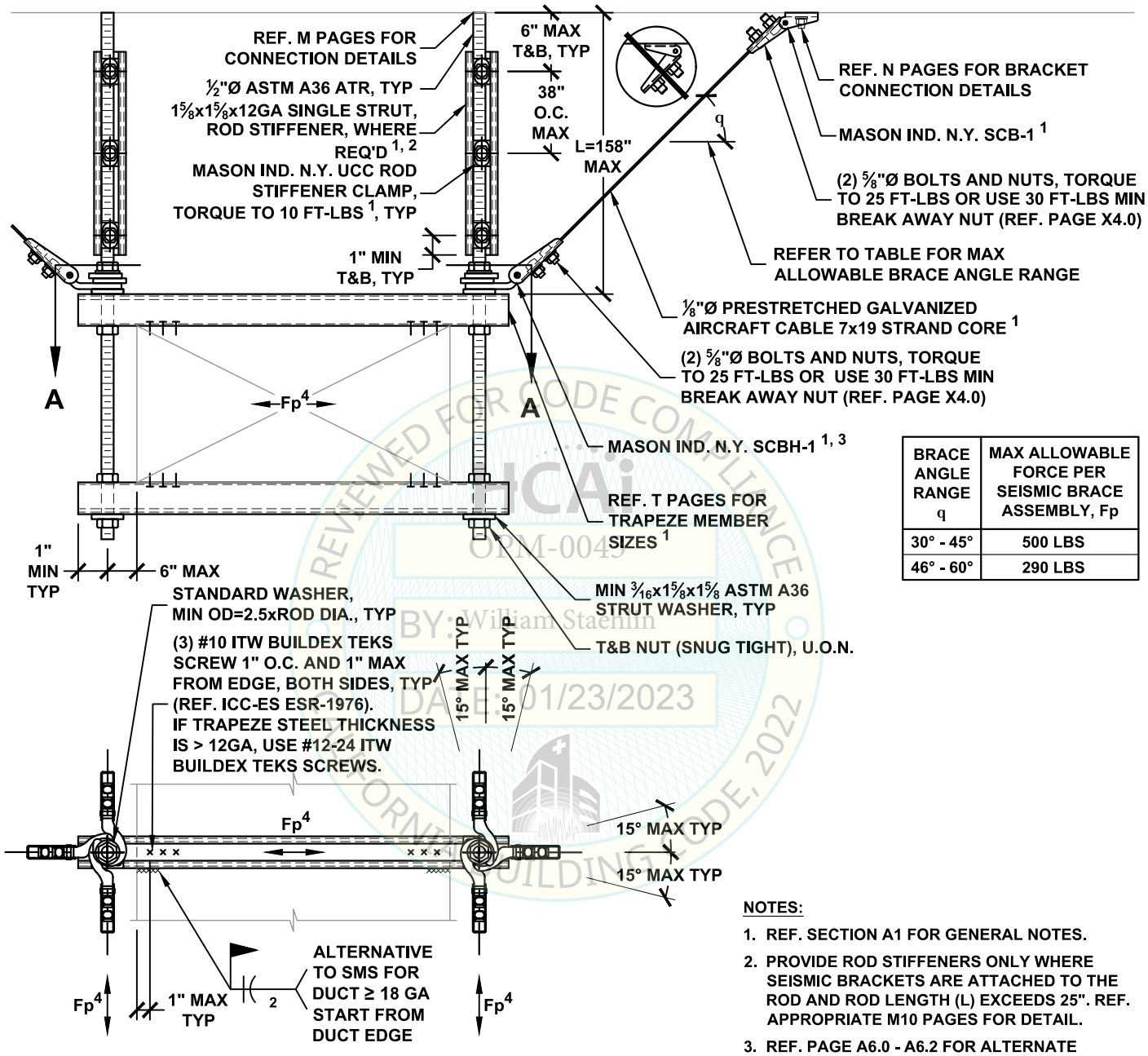

BRACE ANGLE RANGE q	MAX ALLOWABLE FORCE PER SEISMIC BRACE ASSEMBLY, Fp
30° - 45°	500 LBS
46° - 60°	290 LBS

VIEW A-A

NOTES:

1. REF. SECTION A1 FOR GENERAL NOTES.
2. PROVIDE ROD STIFFENERS ONLY WHERE SEISMIC BRACKETS ARE ATTACHED TO THE ROD AND ROD LENGTH (L) EXCEEDS 25". REF. APPROPRIATE M10 PAGES FOR DETAIL.
3. REF. PAGE A6.0 - A6.2 FOR ALTERNATE ARRANGEMENTS OF SEISMIC BRACES AND ANGLE OR HSS MEMBER AS TRAPEZE.
4. DESIGN PROFESSIONAL SHALL CONSIDER ECCENTRIC LOAD DISTRIBUTION WHEN DETERMINING THE Fp VALUE USED IN DESIGN.

REVIEWED FOR CODE COMPLIANCE
OPM-0043
BY: William Staehlin
DATE: 01/23/2023
CALIFORNIA BUILDING CODE, 2022

MASON WEST
1601 E. Miraloma Ave. Placentia, CA 92870
TEL (714) 630 - 0701, www.masonwest.com

Jiefu "Jeff" Zhang, SE
California SE No. S5270

PAGE
D4.22

HANGER ROD DIAMETER = 5/8"	RECTANGULAR DUCT TRANSVERSE SEISMIC CABLE BRACING SYSTEM 100 PLF MAX	KIT OPTIONS TC1T

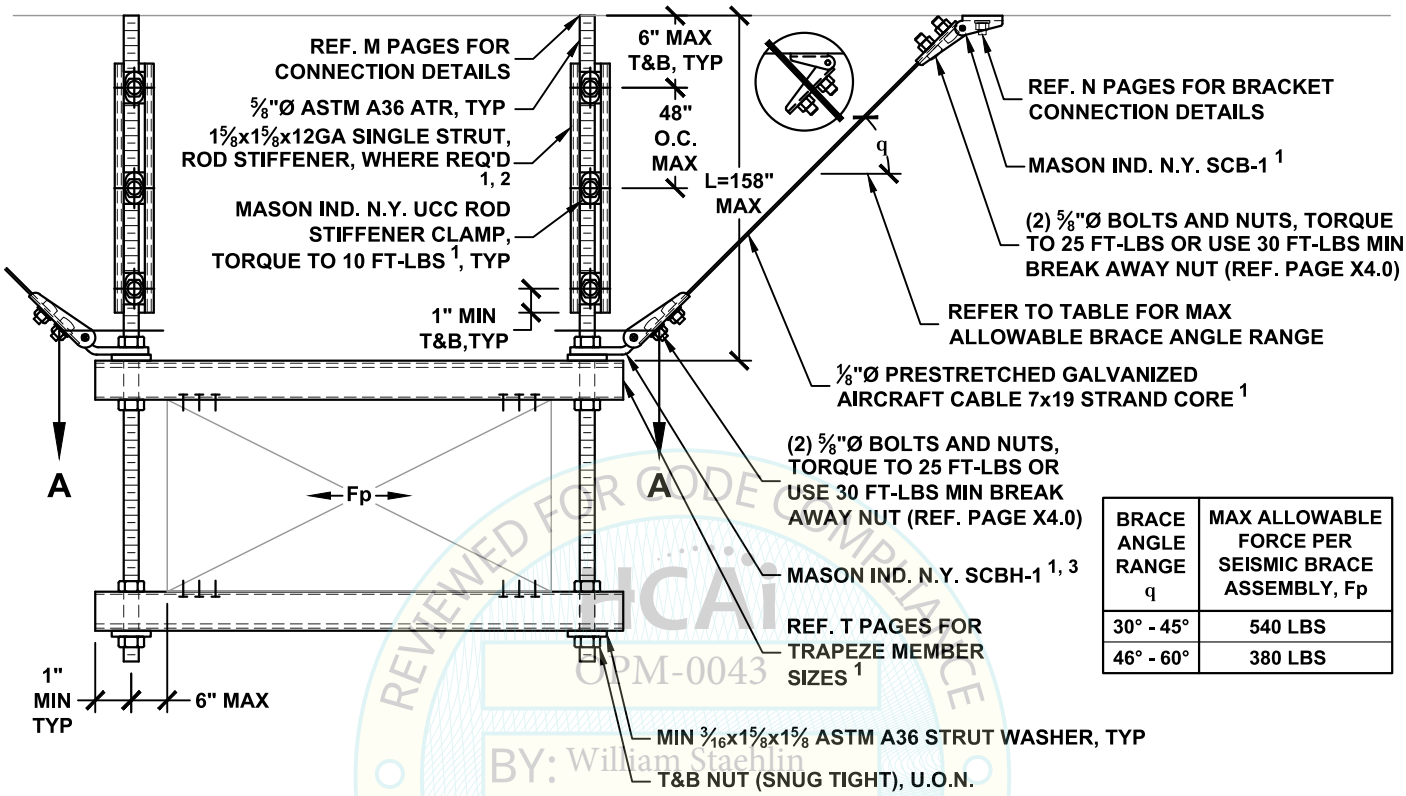

BRACE ANGLE RANGE q	MAX ALLOWABLE FORCE PER SEISMIC BRACE ASSEMBLY, Fp
30° - 45°	540 LBS
46° - 60°	380 LBS

REVIEWED FOR CODE COMPLIANCE
HCAi
OPM-0043
BY: William Staehlin
DATE: 01/23/2023
CALIFORNIA BUILDING CODE, 2022

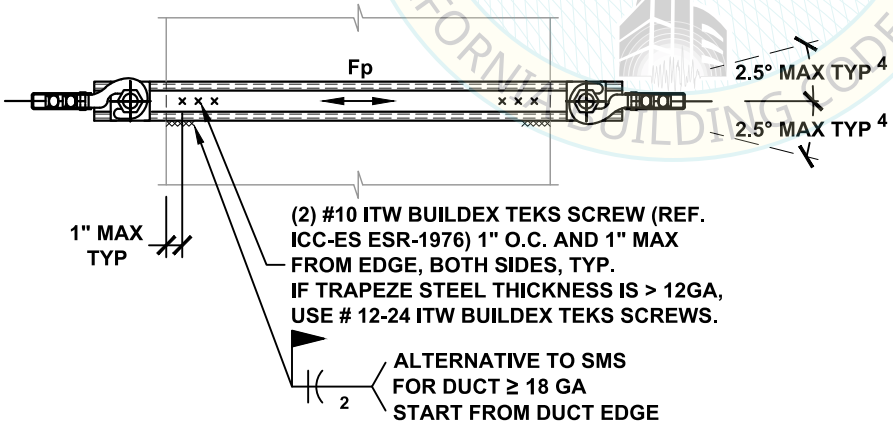

VIEW A-A

NOTES:

1. REF. SECTION A1 FOR GENERAL NOTES.
2. PROVIDE ROD STIFFENERS ONLY WHERE SEISMIC BRACKETS ARE ATTACHED TO THE ROD AND ROD LENGTH (L) EXCEEDS 31". REF. APPROPRIATE M10 PAGES FOR DETAIL.
3. REF. PAGE A6.0 - A6.2 FOR ALTERNATE ARRANGEMENTS OF SEISMIC BRACES AND ANGLE OR HSS MEMBER AS TRAPEZE.
4. ANGLE MAY BE INCREASED TO 15°, REF. PAGE A5.0.

MASON WEST
1601 E. Miraloma Ave. Placentia, CA 92870
TEL (714) 630 - 0701, www.masonwest.com

Jiefu "Jeff" Zhang, SE
California SE No. S5270

PAGE
D4.30

HANGER ROD DIAMETER = 5/8"	RECTANGULAR DUCT LONGITUDINAL SEISMIC CABLE BRACING SYSTEM 100 PLF MAX	KIT OPTIONS TC1L

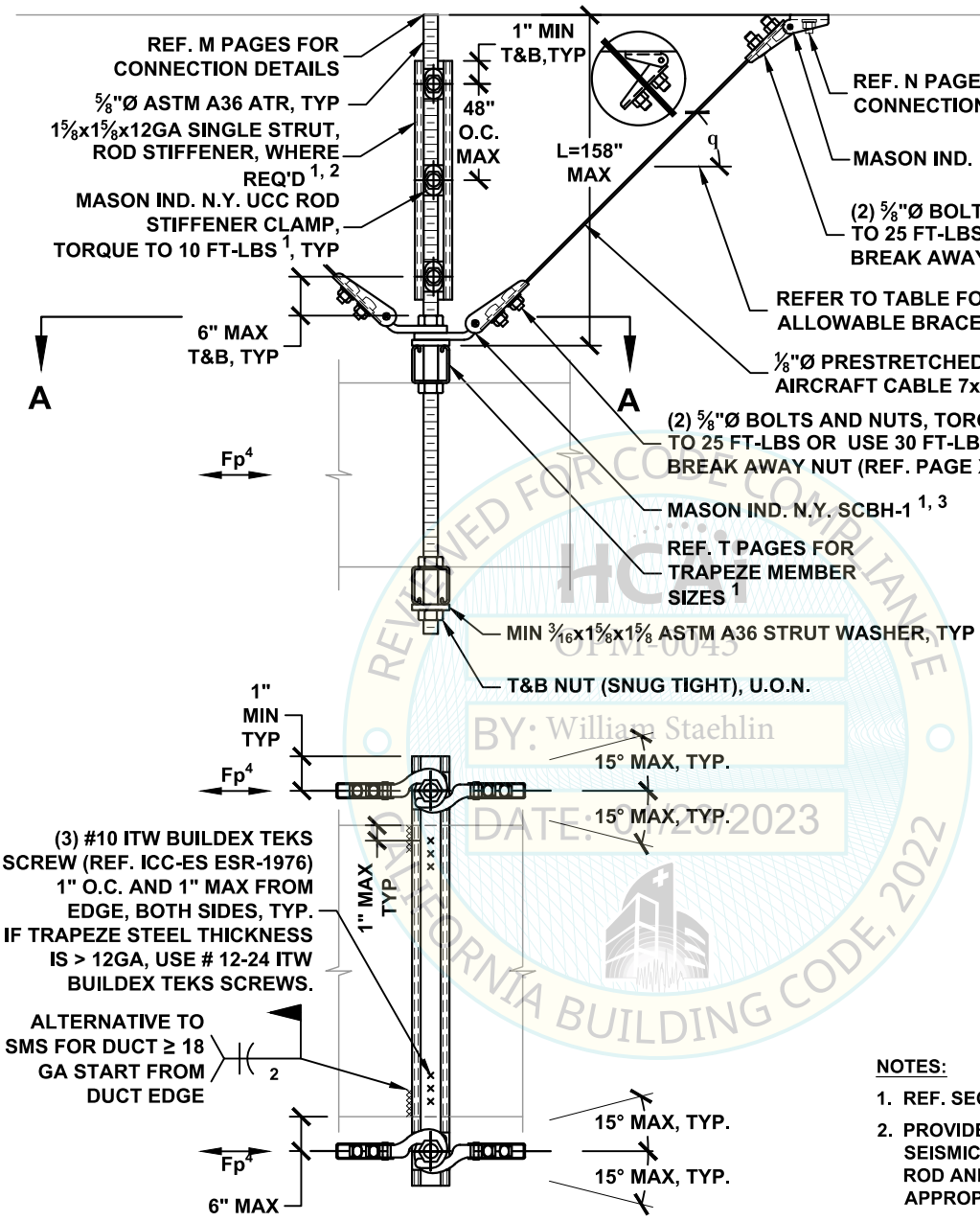

BRACE ANGLE RANGE q	MAX ALLOWABLE FORCE PER SEISMIC BRACE ASSEMBLY, Fp
30° - 45°	540 LBS
46° - 60°	380 LBS

VIEW A-A

NOTES:

1. REF. SECTION A1 FOR GENERAL NOTES.
2. PROVIDE ROD STIFFENERS ONLY WHERE SEISMIC BRACKETS ARE ATTACHED TO THE ROD AND ROD LENGTH (L) EXCEEDS 31". REF. APPROPRIATE M10 PAGES FOR DETAIL.
3. REF. PAGE A6.0 - A6.2 FOR ALTERNATE ARRANGEMENTS OF SEISMIC BRACES AND ANGLE OR HSS MEMBER AS TRAPEZE.
4. DESIGN PROFESSIONAL SHALL CONSIDER ECCENTRIC LOAD DISTRIBUTION WHEN DETERMINING THE Fp VALUE USED IN DESIGN.

REVIEWED FOR CODE COMPLIANCE
OPM-0043
BY: William Staehlin
DATE: 01/23/2023
CALIFORNIA BUILDING CODE, 2022

MASON WEST
1601 E. Miraloma Ave. Placentia, CA 92870
TEL (714) 630 - 0701, www.masonwest.com

Jiefu "Jeff" Zhang, SE
California SE No. S5270

PAGE
D4.31

HANGER ROD DIAMETER = 5/8"	RECTANGULAR DUCT ALL-DIRECTIONAL SEISMIC CABLE BRACING SYSTEM 100 PLF MAX	KIT OPTIONS TC1A

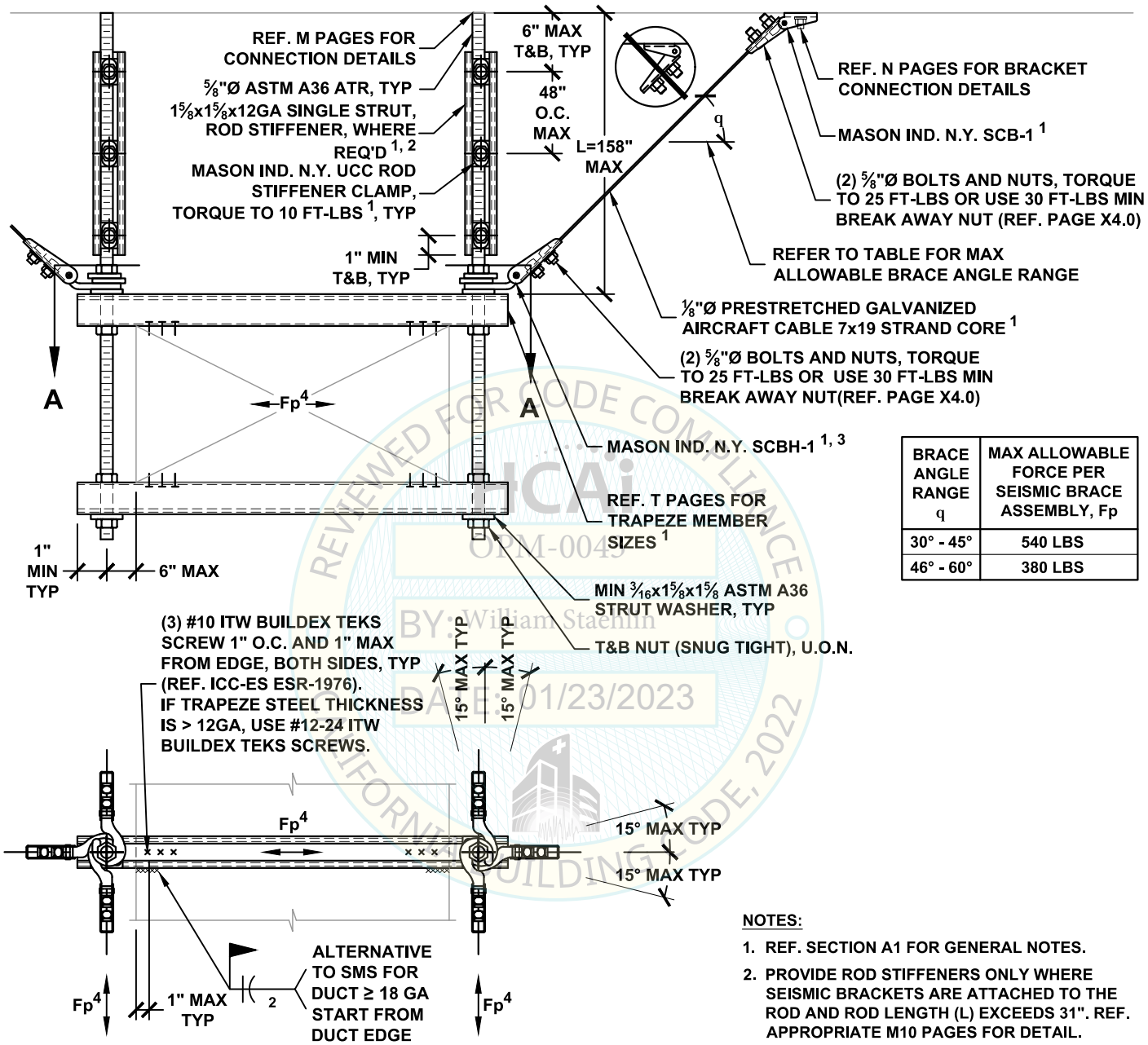

BRACE ANGLE RANGE q	MAX ALLOWABLE FORCE PER SEISMIC BRACE ASSEMBLY, Fp
30° - 45°	540 LBS
46° - 60°	380 LBS

VIEW A-A

NOTES:

1. REF. SECTION A1 FOR GENERAL NOTES.
2. PROVIDE ROD STIFFENERS ONLY WHERE SEISMIC BRACKETS ARE ATTACHED TO THE ROD AND ROD LENGTH (L) EXCEEDS 31". REF. APPROPRIATE M10 PAGES FOR DETAIL.
3. REF. PAGE A6.0 - A6.2 FOR ALTERNATE ARRANGEMENTS OF SEISMIC BRACES AND ANGLE OR HSS MEMBER AS TRAPEZE.
4. DESIGN PROFESSIONAL SHALL CONSIDER ECCENTRI LOAD DISTRIBUTION WHEN DETERMINING THE Fp VALUE USED IN DESIGN.

REVIEWED FOR CODE COMPLIANCE
OPM-0043
BY: William Staehlin
DATE: 01/23/2023
CALIFORNIA BUILDING CODE, 2022

MASON WEST
1601 E. Miraloma Ave. Placentia, CA 92870
TEL (714) 630 - 0701, www.masonwest.com

Jiefu "Jeff" Zhang, SE
California SE No. S5270

PAGE
D4.32

HANGER ROD DIAMETER = 3/8"	RECTANGULAR DUCT X-PATTERN SEISMIC CABLE BRACING SYSTEM 30 PLF MAX	KIT OPTIONS TC0X

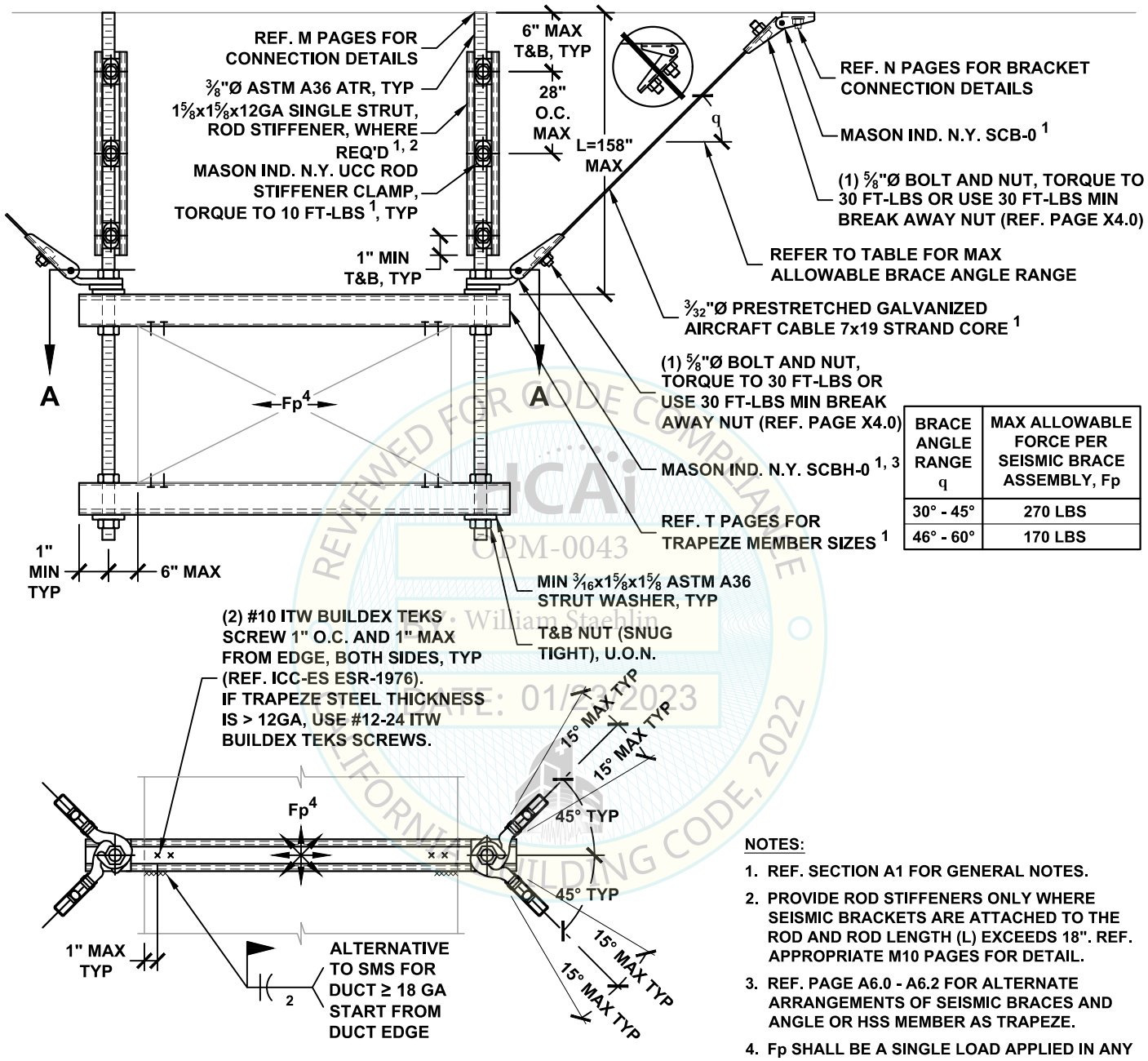

BRACE ANGLE RANGE q	MAX ALLOWABLE FORCE PER SEISMIC BRACE ASSEMBLY, Fp
30° - 45°	270 LBS
46° - 60°	170 LBS

VIEW A-A

NOTES:

1. REF. SECTION A1 FOR GENERAL NOTES.
2. PROVIDE ROD STIFFENERS ONLY WHERE SEISMIC BRACKETS ARE ATTACHED TO THE ROD AND ROD LENGTH (L) EXCEEDS 18". REF. APPROPRIATE M10 PAGES FOR DETAIL.
3. REF. PAGE A6.0 - A6.2 FOR ALTERNATE ARRANGEMENTS OF SEISMIC BRACES AND ANGLE OR HSS MEMBER AS TRAPEZE.
4. Fp SHALL BE A SINGLE LOAD APPLIED IN ANY HORIZONTAL DIRECTION. MULTIPLE ARROWS DO NOT SIGNIFY SIMULTANEOUS Fp LOADS ACTING AT ONE TIME. DESIGN PROFESSIONAL SHALL CONSIDER ECCENTRIC LOAD DISTRIBUTION WHEN DETERMINING THE Fp VALUE USED IN DESIGN.

REVIEWED FOR CODE COMPLIANCE HCAi OPM-0043 William Staehlin DATE: 01/23/2023 CALIFORNIA BUILDING CODE, 2022

MASON WEST
1601 E. Miraloma Ave. Placentia, CA 92870
TEL (714) 630 - 0701, www.masonwest.com

Jiefu "Jeff" Zhang, SE
California SE No. S5270

HANGER ROD DIAMETER = ½"	RECTANGULAR DUCT X-PATTERN SEISMIC CABLE BRACING SYSTEM 60 PLF MAX	KIT OPTIONS TC1X

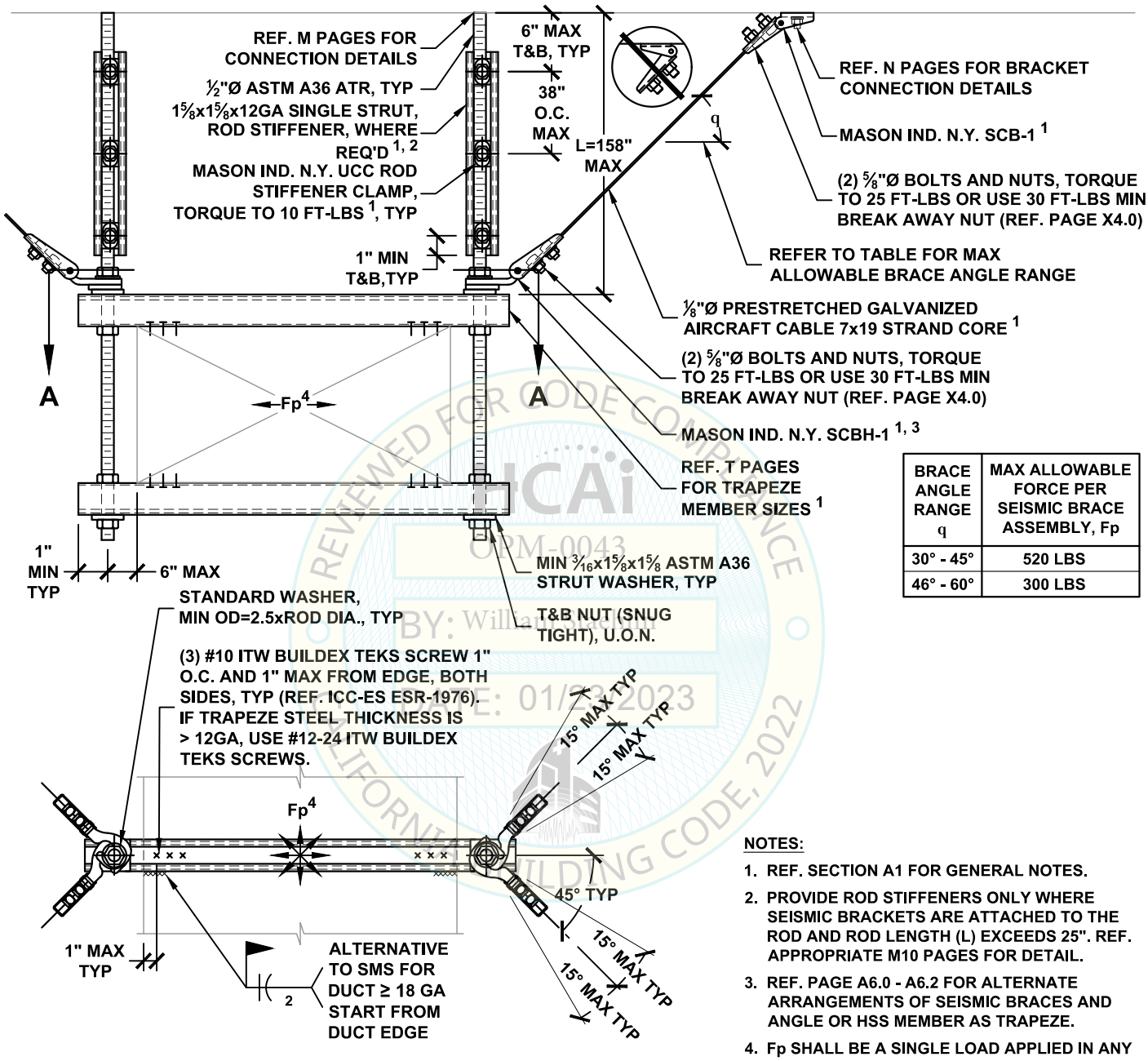

BRACE ANGLE RANGE q	MAX ALLOWABLE FORCE PER SEISMIC BRACE ASSEMBLY, Fp
30° - 45°	520 LBS
46° - 60°	300 LBS

VIEW A-A

NOTES:

1. REF. SECTION A1 FOR GENERAL NOTES.
2. PROVIDE ROD STIFFENERS ONLY WHERE SEISMIC BRACKETS ARE ATTACHED TO THE ROD AND ROD LENGTH (L) EXCEEDS 25". REF. APPROPRIATE M10 PAGES FOR DETAIL.
3. REF. PAGE A6.0 - A6.2 FOR ALTERNATE ARRANGEMENTS OF SEISMIC BRACES AND ANGLE OR HSS MEMBER AS TRAPEZE.
4. Fp SHALL BE A SINGLE LOAD APPLIED IN ANY HORIZONTAL DIRECTION. MULTIPLE ARROWS DO NOT SIGNIFY SIMULTANEOUS Fp LOADS ACTING AT ONE TIME. DESIGN PROFESSIONAL SHALL CONSIDER ECCENTRIC LOAD DISTRIBUTION WHEN DETERMINING THE Fp VALUE USED IN DESIGN.

REVIEWED FOR CODE COMPLIANCE HCAi OPM-0043 BY: William Staehlin DATE: 01/23/2023 CALIFORNIA BUILDING CODE, 2022

MASON WEST
1601 E. Miraloma Ave. Placentia, CA 92870
TEL (714) 630 - 0701, www.masonwest.com

Jiefu "Jeff" Zhang, SE
California SE No. S5270

PAGE
D5.11

HANGER ROD DIAMETER = 5/8"	RECTANGULAR DUCT X-PATTERN SEISMIC CABLE BRACING SYSTEM 100 PLF MAX	KIT OPTIONS TC1X

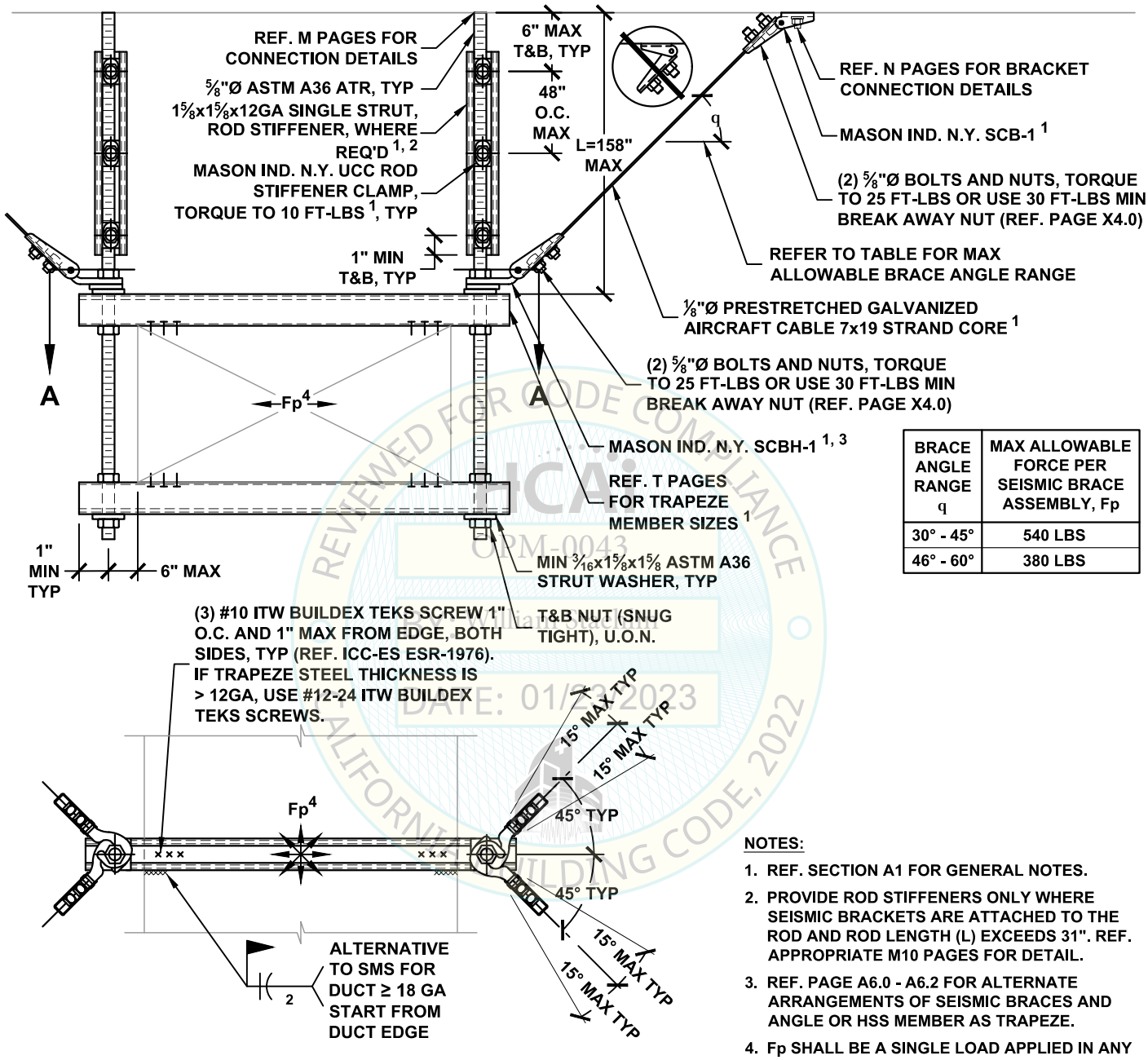

BRACE ANGLE RANGE q	MAX ALLOWABLE FORCE PER SEISMIC BRACE ASSEMBLY, Fp
30° - 45°	540 LBS
46° - 60°	380 LBS

VIEW A-A

NOTES:

1. REF. SECTION A1 FOR GENERAL NOTES.
2. PROVIDE ROD STIFFENERS ONLY WHERE SEISMIC BRACKETS ARE ATTACHED TO THE ROD AND ROD LENGTH (L) EXCEEDS 31". REF. APPROPRIATE M10 PAGES FOR DETAIL.
3. REF. PAGE A6.0 - A6.2 FOR ALTERNATE ARRANGEMENTS OF SEISMIC BRACES AND ANGLE OR HSS MEMBER AS TRAPEZE.
4. Fp SHALL BE A SINGLE LOAD APPLIED IN ANY HORIZONTAL DIRECTION. MULTIPLE ARROWS DO NOT SIGNIFY SIMULTANEOUS Fp LOADS ACTING AT ONE TIME. DESIGN PROFESSIONAL SHALL CONSIDER ECCENTRIC LOAD DISTRIBUTION WHEN DETERMING THE Fp VALUE USED IN DESIGN.

REVIEWED FOR CODE COMPLIANCE HCAi OPM-0043 DATE: 01/23/2023 CALIFORNIA BUILDING CODE, 2022

MASON WEST
1601 E. Miraloma Ave. Placentia, CA 92870
TEL (714) 630 - 0701, www.masonwest.com

Jiefu "Jeff" Zhang, SE
California SE No. S5270

HANGER ROD DIAMETER = 3/8"	ROUND DUCT TRANSVERSE SEISMIC CABLE BRACING SYSTEM 30 PLF MAX	KIT OPTIONS TC0T

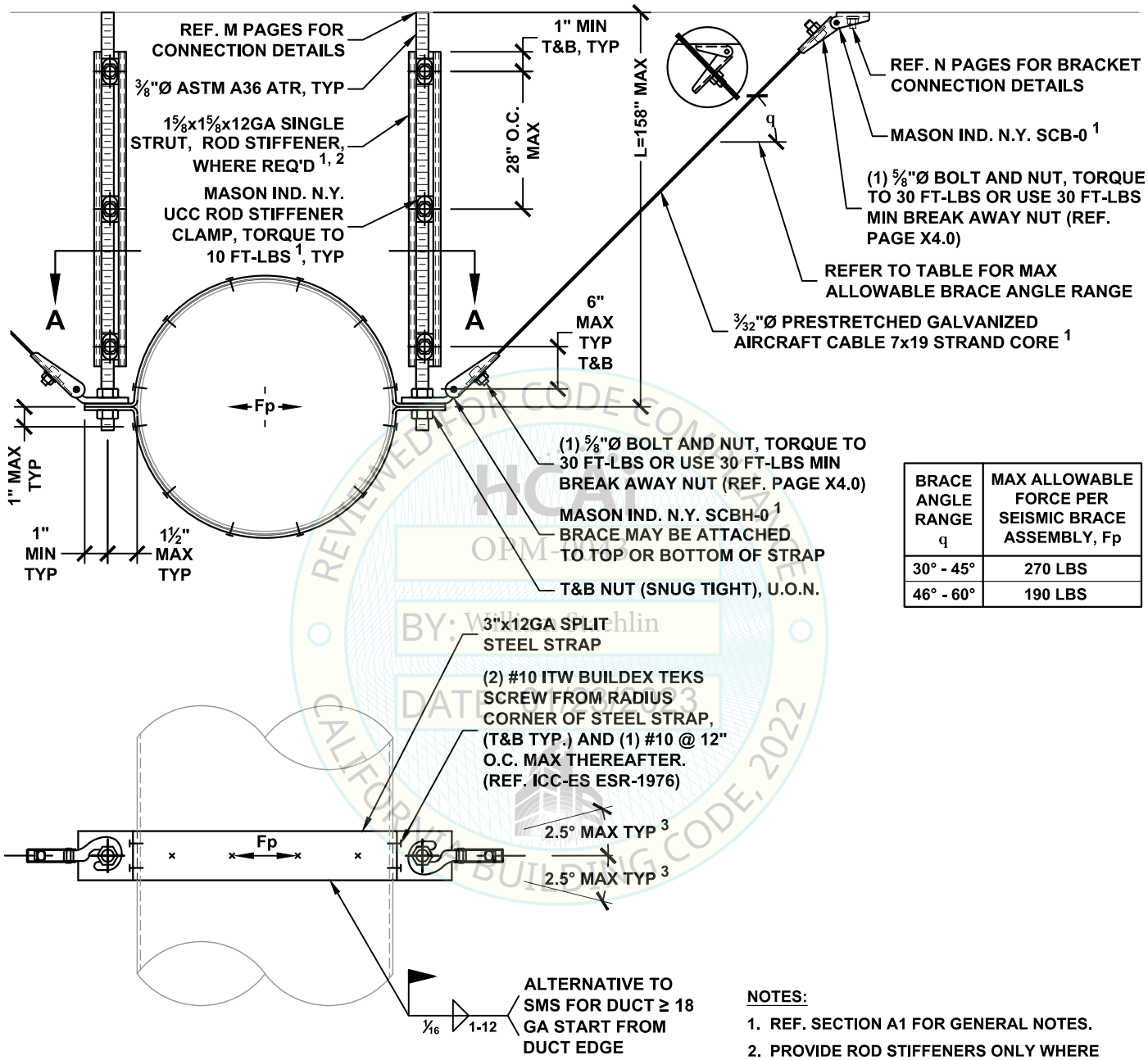

BRACE ANGLE RANGE q	MAX ALLOWABLE FORCE PER SEISMIC BRACE ASSEMBLY, Fp
30° - 45°	270 LBS
46° - 60°	190 LBS

VIEW A-A

NOTES:

1. REF. SECTION A1 FOR GENERAL NOTES.
2. PROVIDE ROD STIFFENERS ONLY WHERE SEISMIC BRACKETS ARE ATTACHED TO THE ROD AND ROD LENGTH (L) EXCEEDS 18". REF. APPROPRIATE M10 PAGES FOR DETAIL.
3. ANGLE MAY BE INCREASED TO 15°, REF. PAGE A5.0.

REVIEWED FOR CODE COMPLIANCE
OPM-0043
BY: William Staehlin
DATE: 1/23/2023
CALIFORNIA BUILDING CODE, 2022

MASON WEST
1601 E. Miraloma Ave. Placentia, CA 92870
TEL (714) 630 - 0701, www.masonwest.com

Jiefu "Jeff" Zhang, SE
California SE No. S5270

PAGE
D6.10

HANGER ROD DIAMETER = ⅜"	ROUND DUCT LONGITUDINAL SEISMIC CABLE BRACING SYSTEM 30 PLF MAX	KIT OPTIONS TC0L

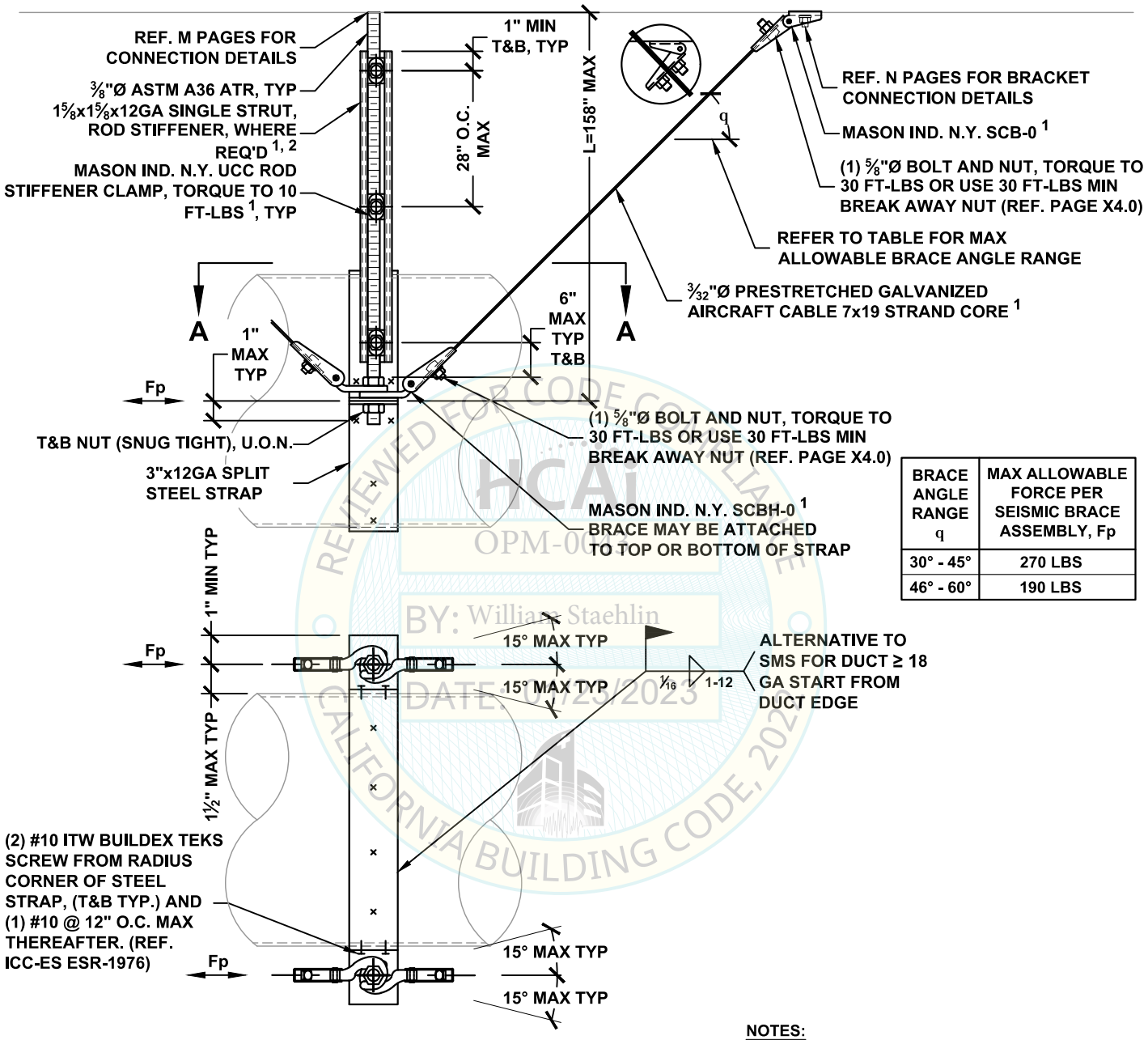

BRACE ANGLE RANGE q	MAX ALLOWABLE FORCE PER SEISMIC BRACE ASSEMBLY, Fp
30° - 45°	270 LBS
46° - 60°	190 LBS

REVIEWED FOR CODE COMPLIANCE
HCAi
OPM-0043
BY: William Staehlin
DATE: 1/23/2023
CALIFORNIA BUILDING CODE, 2022

VIEW A-A

NOTES:

1. REF. SECTION A1 FOR GENERAL NOTES.
2. PROVIDE ROD STIFFENERS ONLY WHERE SEISMIC BRACKETS ARE ATTACHED TO THE ROD AND ROD LENGTH (L) EXCEEDS 18". REF. APPROPRIATE M10 PAGES FOR DETAIL.

MASON WEST
1601 E. Miraloma Ave. Placentia, CA 92870
TEL (714) 630 - 0701, www.masonwest.com

Jiefu "Jeff" Zhang, SE
California SE No. S5270

PAGE
D6.11

HANGER ROD DIAMETER = 3/8"	ROUND DUCT ALL-DIRECTIONAL SEISMIC CABLE BRACING SYSTEM 30 PLF MAX	KIT OPTIONS TC0A

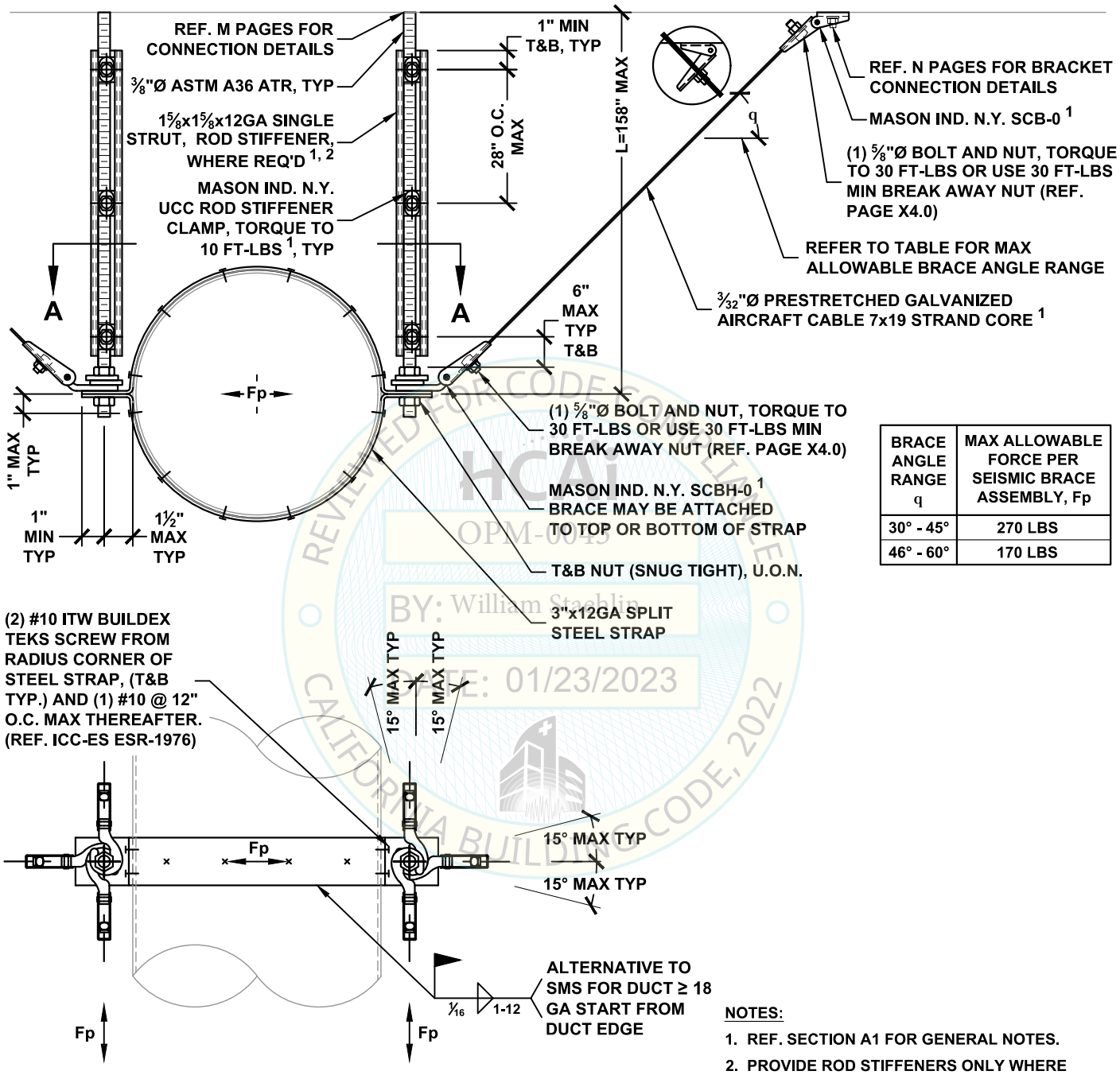

BRACE ANGLE RANGE q	MAX ALLOWABLE FORCE PER SEISMIC BRACE ASSEMBLY, Fp
30° - 45°	270 LBS
46° - 60°	170 LBS

VIEW A-A

NOTES:

1. REF. SECTION A1 FOR GENERAL NOTES.
2. PROVIDE ROD STIFFENERS ONLY WHERE SEISMIC BRACKETS ARE ATTACHED TO THE ROD AND ROD LENGTH (L) EXCEEDS 18". REF. APPROPRIATE M10 PAGES FOR DETAIL.

REVIEWED FOR CODE COMPLIANCE
HCAi
OPM-0043
BY: William Staehlin
DATE: 01/23/2023
CALIFORNIA BUILDING CODE, 2022

MASON WEST
1601 E. Miraloma Ave. Placentia, CA 92870
TEL (714) 630 - 0701, www.masonwest.com

Jiefu "Jeff" Zhang, SE
California SE No. S5270

HANGER ROD DIAMETER = ½"	ROUND DUCT TRANSVERSE SEISMIC CABLE BRACING SYSTEM 60 PLF MAX	KIT OPTIONS TC1T

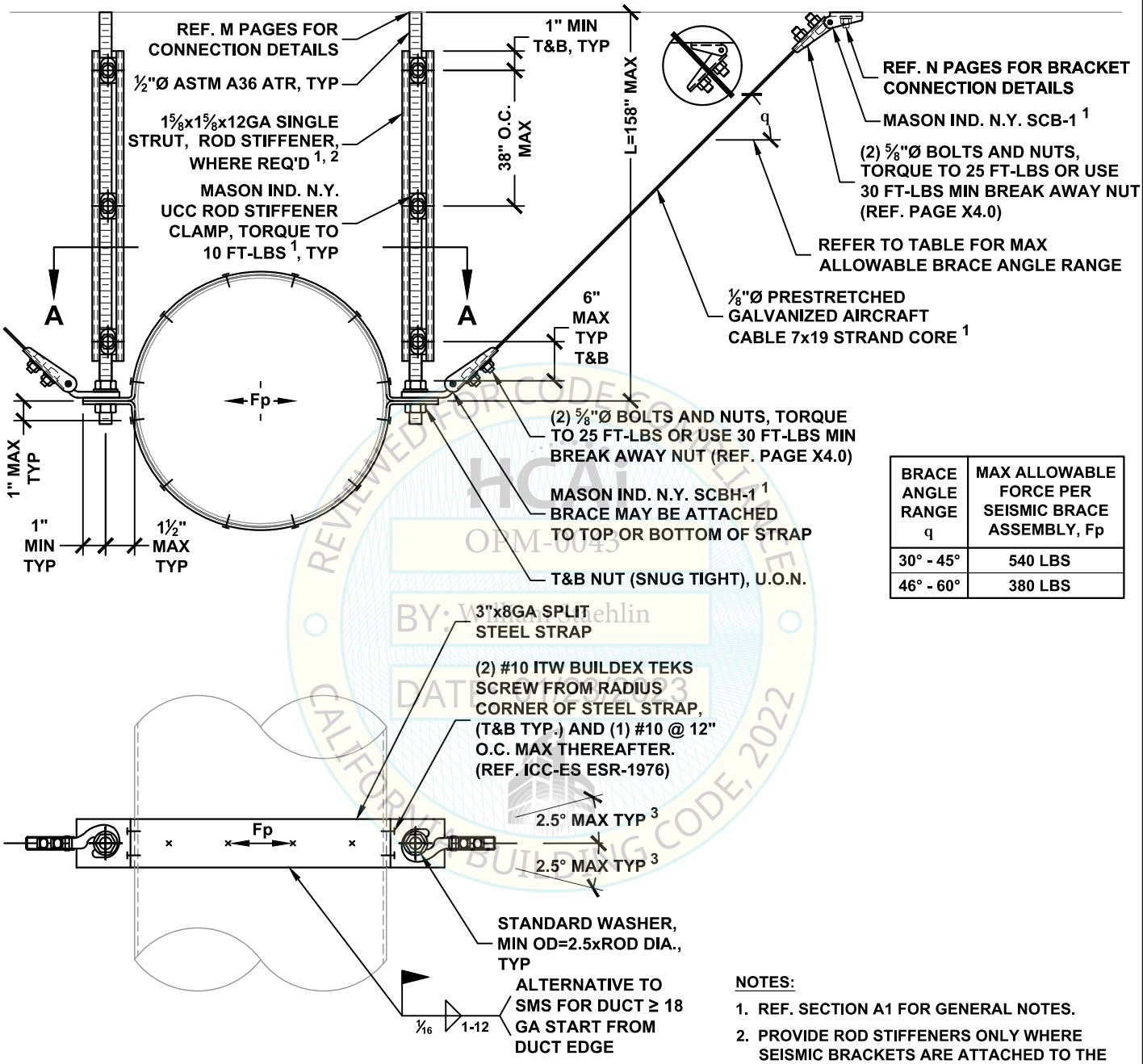

BRACE ANGLE RANGE q	MAX ALLOWABLE FORCE PER SEISMIC BRACE ASSEMBLY, Fp
30° - 45°	540 LBS
46° - 60°	380 LBS

VIEW A-A

NOTES:

1. REF. SECTION A1 FOR GENERAL NOTES.
2. PROVIDE ROD STIFFENERS ONLY WHERE SEISMIC BRACKETS ARE ATTACHED TO THE ROD AND ROD LENGTH (L) EXCEEDS 25". REF. APPROPRIATE M10 PAGES FOR DETAIL.
3. ANGLE MAY BE INCREASED TO 15°, REF. PAGE A5.0.

REVIEWED FOR CODE COMPLIANCE
HCAi
OPM-0043
BY: William Staehlin
DATE: 1/23/2023
CALIFORNIA BUILDING CODE, 2022

MASON WEST
1601 E. Miraloma Ave. Placentia, CA 92870
TEL (714) 630 - 0701, www.masonwest.com

Jiefu "Jeff" Zhang, SE
California SE No. S5270

PAGE
D6.20

HANGER ROD DIAMETER = ½"	ROUND DUCT LONGITUDINAL SEISMIC CABLE BRACING SYSTEM 60 PLF MAX	KIT OPTIONS TC1L

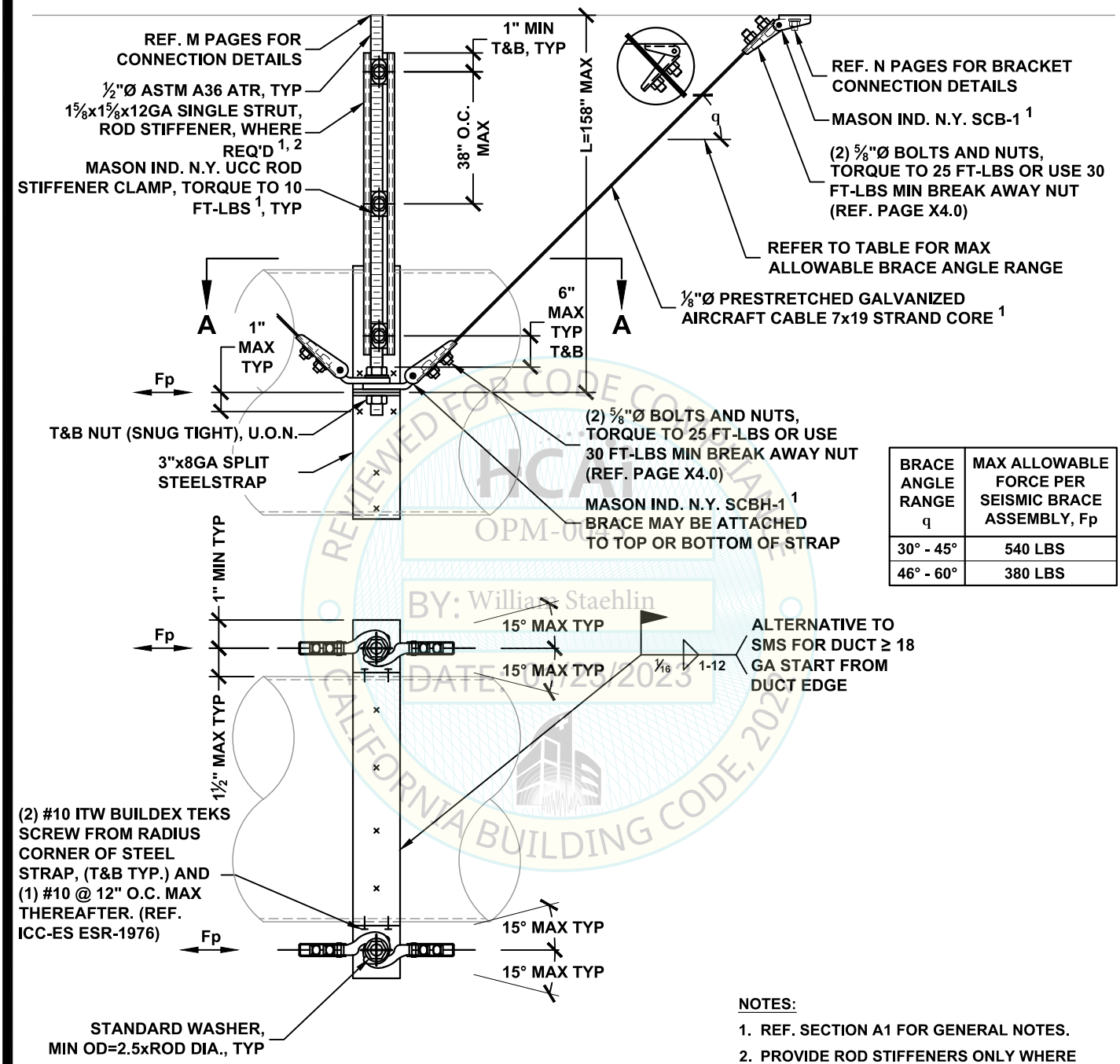

BRACE ANGLE RANGE q	MAX ALLOWABLE FORCE PER SEISMIC BRACE ASSEMBLY, Fp
30° - 45°	540 LBS
46° - 60°	380 LBS

VIEW A-A

NOTES:

1. REF. SECTION A1 FOR GENERAL NOTES.
2. PROVIDE ROD STIFFENERS ONLY WHERE SEISMIC BRACKETS ARE ATTACHED TO THE ROD AND ROD LENGTH (L) EXCEEDS 25". REF. APPROPRIATE M10 PAGES FOR DETAIL.

REVIEWED FOR CODE COMPLIANCE
HCAI
OPM-0043
BY: William Staehlin
DATE: 01/23/2023
CALIFORNIA BUILDING CODE, 2022

MASON WEST
1601 E. Miraloma Ave. Placentia, CA 92870
TEL (714) 630 - 0701, www.masonwest.com

Jiefu "Jeff" Zhang, SE
California SE No. S5270

PAGE
D6.21

HANGER ROD DIAMETER = ½"	ROUND DUCT ALL-DIRECTIONAL SEISMIC CABLE BRACING SYSTEM 60 PLF MAX	KIT OPTIONS TC1A

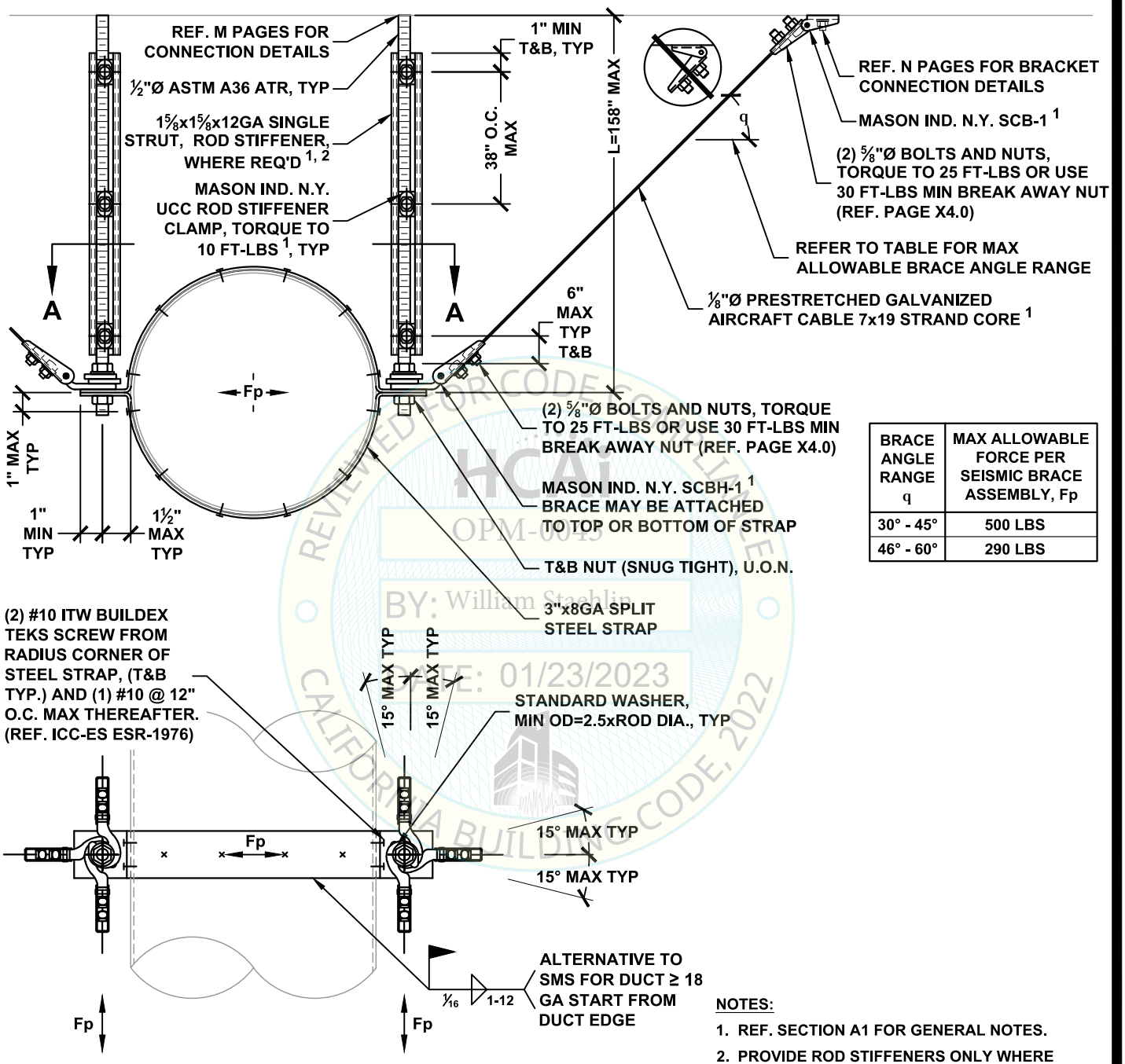

BRACE ANGLE RANGE q	MAX ALLOWABLE FORCE PER SEISMIC BRACE ASSEMBLY, Fp
30° - 45°	500 LBS
46° - 60°	290 LBS

VIEW A-A

NOTES:

1. REF. SECTION A1 FOR GENERAL NOTES.
2. PROVIDE ROD STIFFENERS ONLY WHERE SEISMIC BRACKETS ARE ATTACHED TO THE ROD AND ROD LENGTH (L) EXCEEDS 25". REF. APPROPRIATE M10 PAGES FOR DETAIL.

REVIEWED FOR CODE COMPLIANCE
HCAi
OPM-0043
BY: William Staehlin
DATE: 01/23/2023
CALIFORNIA BUILDING CODE, 2022

MASON WEST
1601 E. Miraloma Ave. Placentia, CA 92870
TEL (714) 630 - 0701, www.masonwest.com

Jiefu "Jeff" Zhang, SE
California SE No. S5270

HANGER ROD DIAMETER = 3/8"	ROUND DUCT X-PATTERN SEISMIC CABLE BRACING SYSTEM 30 PLF MAX	KIT OPTIONS TC0X

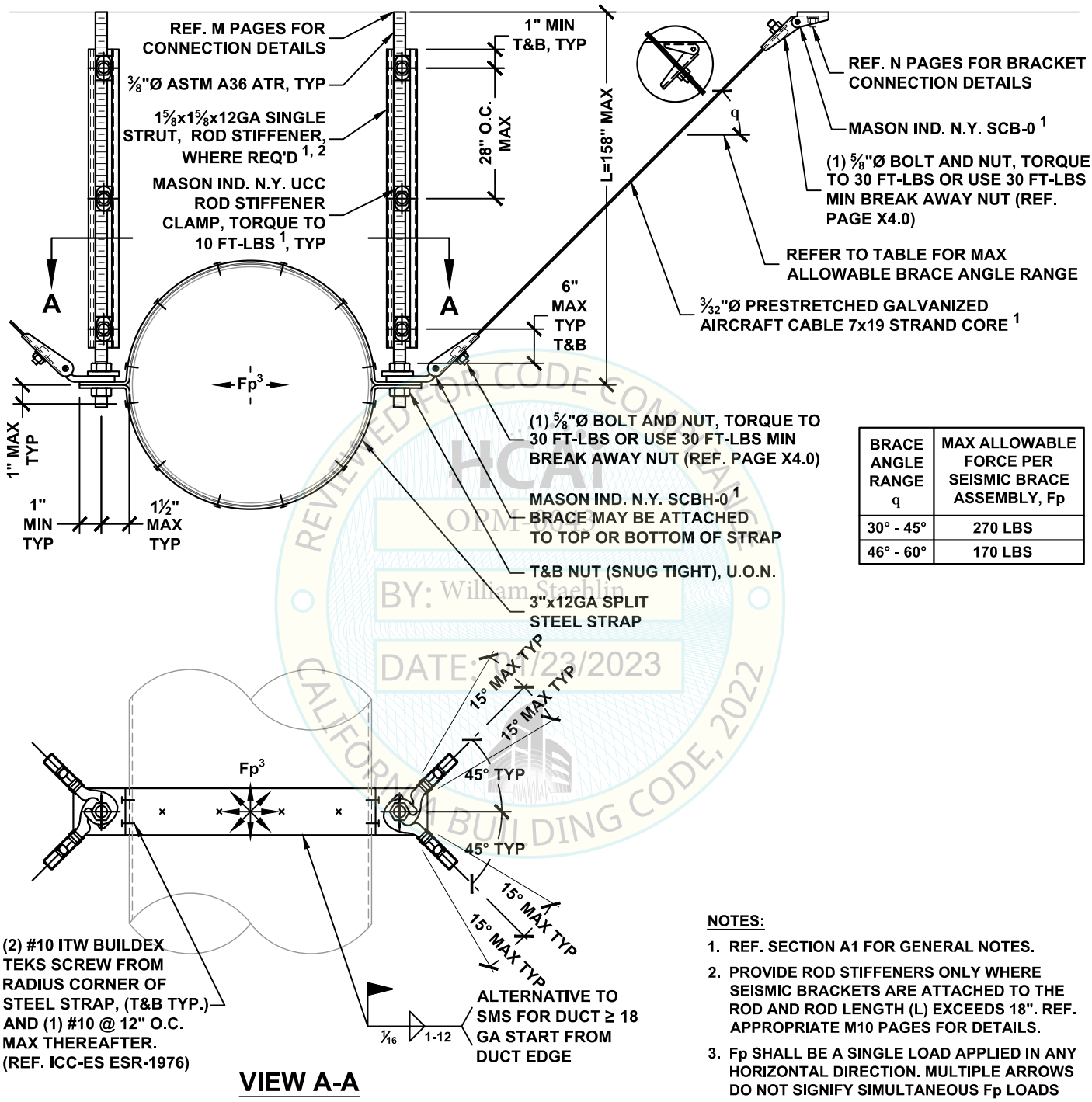

VIEW A-A

BRACE ANGLE RANGE q	MAX ALLOWABLE FORCE PER SEISMIC BRACE ASSEMBLY, Fp
30° - 45°	270 LBS
46° - 60°	170 LBS

NOTES:

1. REF. SECTION A1 FOR GENERAL NOTES.
2. PROVIDE ROD STIFFENERS ONLY WHERE SEISMIC BRACKETS ARE ATTACHED TO THE ROD AND ROD LENGTH (L) EXCEEDS 18". REF. APPROPRIATE M10 PAGES FOR DETAILS.
3. Fp SHALL BE A SINGLE LOAD APPLIED IN ANY HORIZONTAL DIRECTION. MULTIPLE ARROWS DO NOT SIGNIFY SIMULTANEOUS Fp LOADS ACTING AT ONE TIME.

REVIEWED FOR CODE COMPLIANCE HCAI OPM-0043 BY: William Staehlin DATE: 1/23/2023 CALIFORNIA BUILDING CODE, 2022

MASON WEST
1601 E. Miraloma Ave. Placentia, CA 92870
TEL (714) 630 - 0701, www.masonwest.com

Jiefu "Jeff" Zhang, SE
California SE No. S5270

PAGE
D7.10

HANGER ROD DIAMETER = ½"	ROUND DUCT X-PATTERN SEISMIC CABLE BRACING SYSTEM 30 PLF MAX	KIT OPTIONS TC1X

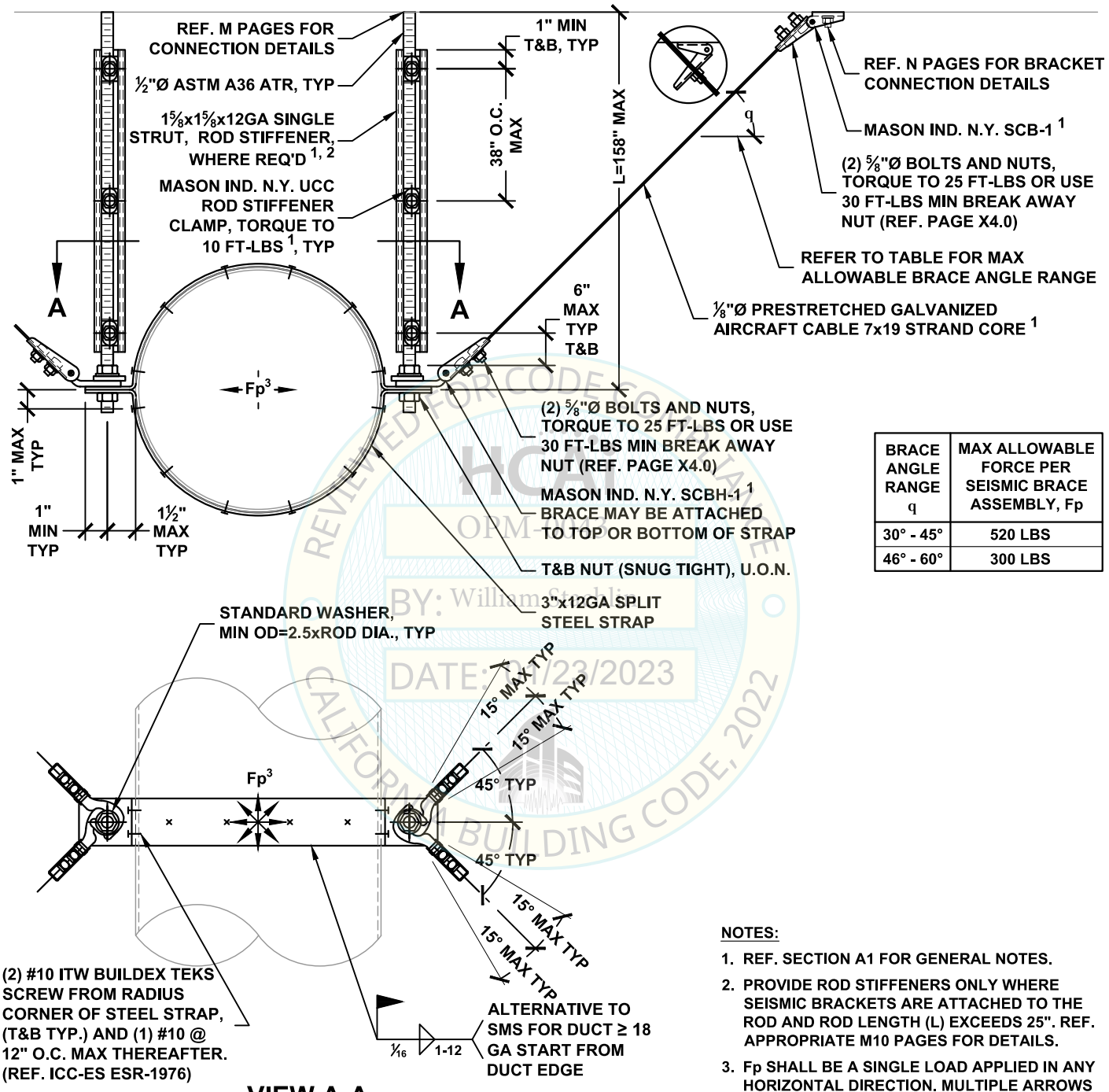

BRACE ANGLE RANGE q	MAX ALLOWABLE FORCE PER SEISMIC BRACE ASSEMBLY, Fp
30° - 45°	520 LBS
46° - 60°	300 LBS

VIEW A-A

NOTES:

1. REF. SECTION A1 FOR GENERAL NOTES.
2. PROVIDE ROD STIFFENERS ONLY WHERE SEISMIC BRACKETS ARE ATTACHED TO THE ROD AND ROD LENGTH (L) EXCEEDS 25". REF. APPROPRIATE M10 PAGES FOR DETAILS.
3. Fp SHALL BE A SINGLE LOAD APPLIED IN ANY HORIZONTAL DIRECTION. MULTIPLE ARROWS DO NOT SIGNIFY SIMULTANEOUS Fp LOADS ACTING AT ONE TIME.

REVIEWED FOR CODE COMPLIANCE
OPM-0043
BY: William Staehlin
DATE: 1/23/2023
CALIFORNIA BUILDING CODE, 2022

MASON WEST
1601 E. Miraloma Ave. Placentia, CA 92870
TEL (714) 630 - 0701, www.masonwest.com

Jiefu "Jeff" Zhang, SE
California SE No. S5270

PAGE
D7.11

HANGER ROD DIAMETER = 5/8"	ROUND DUCT X-PATTERN SEISMIC CABLE BRACING SYSTEM 60 PLF MAX	KIT OPTIONS TC1X

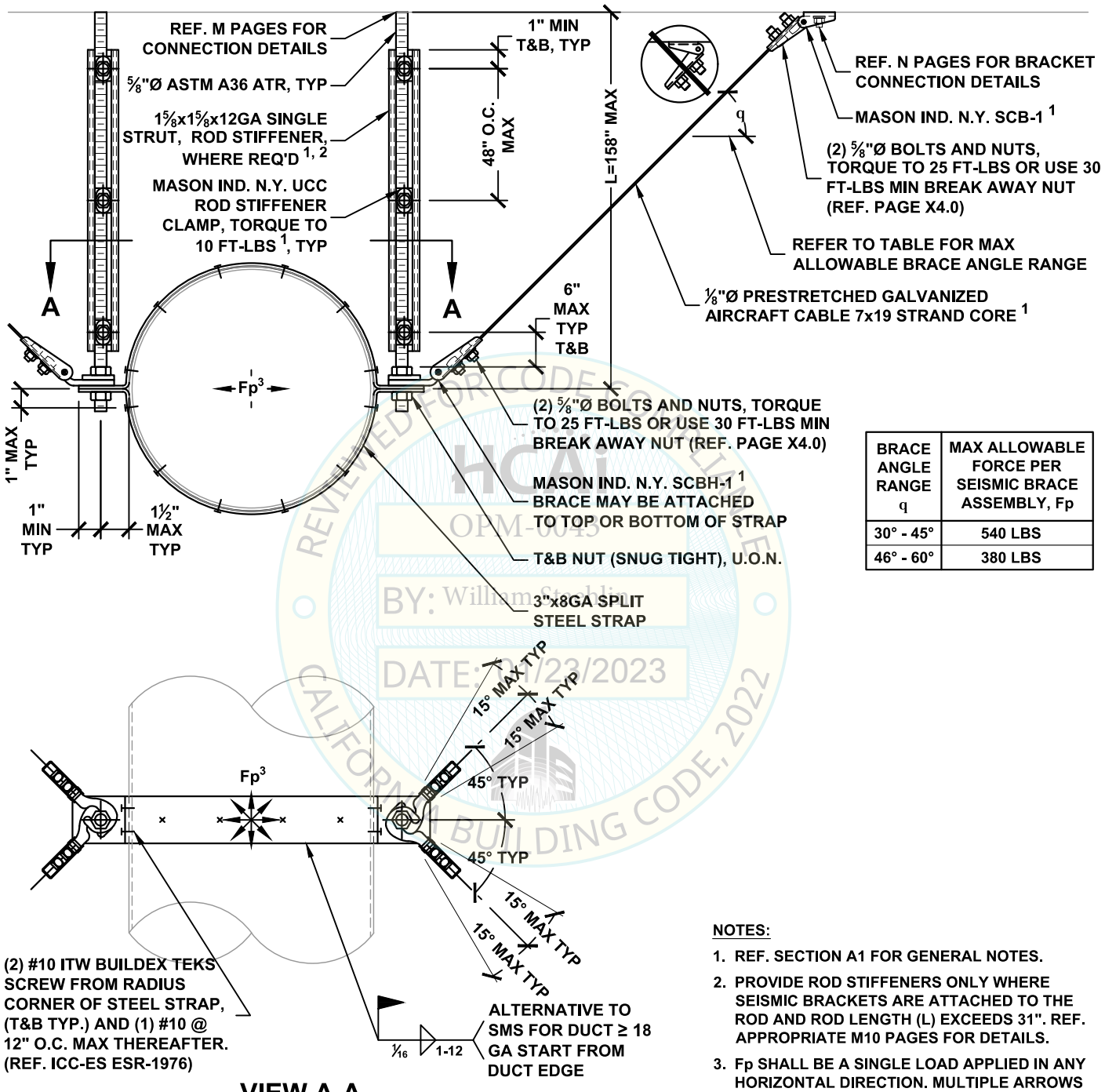

BRACE ANGLE RANGE q	MAX ALLOWABLE FORCE PER SEISMIC BRACE ASSEMBLY, Fp
30° - 45°	540 LBS
46° - 60°	380 LBS

VIEW A-A

REVIEWED FOR CODE COMPLIANCE
HCAi
OPM-0043
BY: William Staehlin
DATE: 1/23/2023
CALIFORNIA BUILDING CODE, 2022

NOTES:

1. REF. SECTION A1 FOR GENERAL NOTES.
2. PROVIDE ROD STIFFENERS ONLY WHERE SEISMIC BRACKETS ARE ATTACHED TO THE ROD AND ROD LENGTH (L) EXCEEDS 31". REF. APPROPRIATE M10 PAGES FOR DETAILS.
3. Fp SHALL BE A SINGLE LOAD APPLIED IN ANY HORIZONTAL DIRECTION. MULTIPLE ARROWS DO NOT SIGNIFY SIMULTANEOUS Fp LOADS ACTING AT ONE TIME.

MASON WEST
1601 E. Miraloma Ave. Placentia, CA 92870
TEL (714) 630 - 0701, www.masonwest.com

Jiefu "Jeff" Zhang, SE
California SE No. S5270

PAGE
D7.12

HANGER ROD DIAMETER = ⅜"	FACTORY-BUILT VENT DUCT TRANSVERSE SEISMIC CABLE BRACING SYSTEM 30 PLF MAX	KIT OPTIONS TC0T

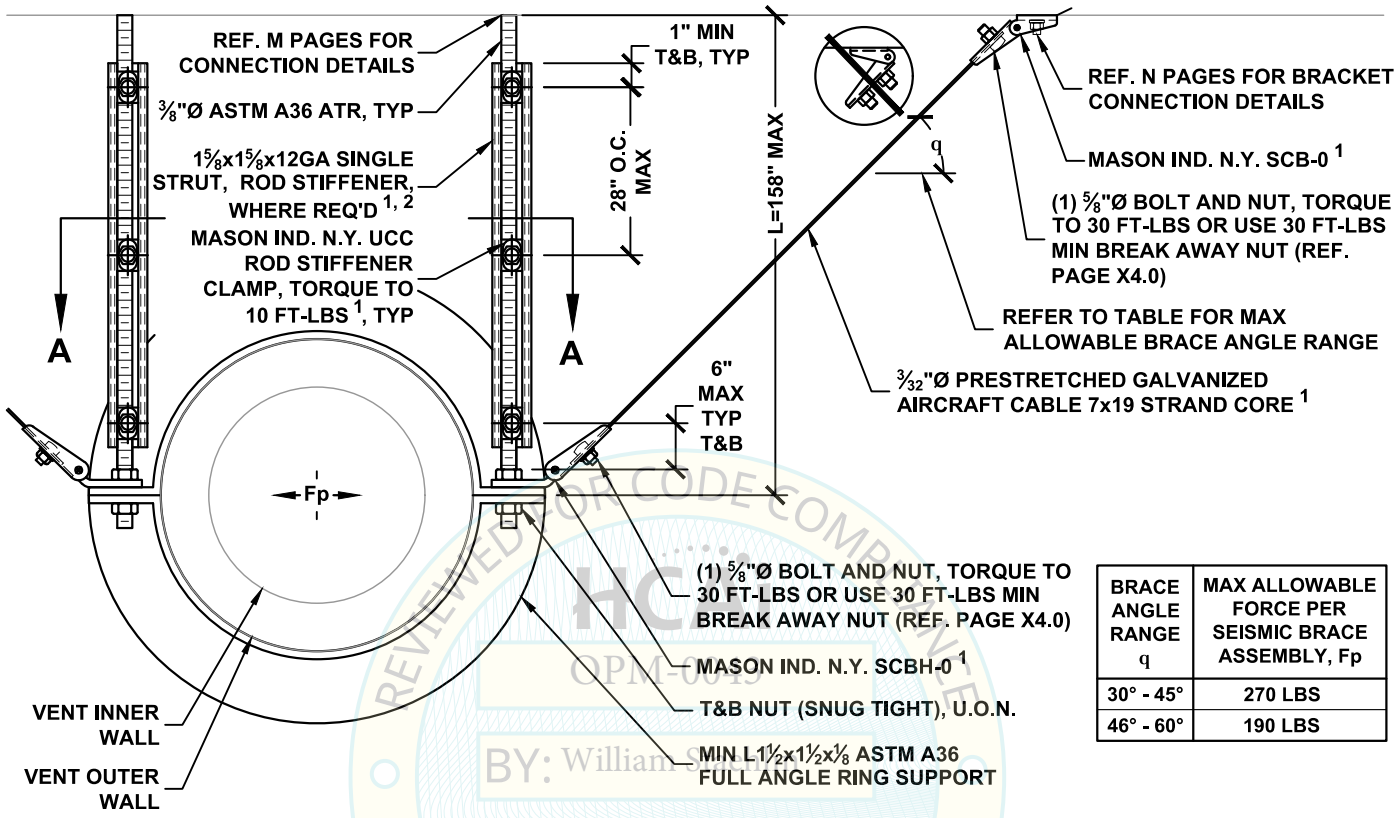

BRACE ANGLE RANGE q	MAX ALLOWABLE FORCE PER SEISMIC BRACE ASSEMBLY, Fp
30° - 45°	270 LBS
46° - 60°	190 LBS

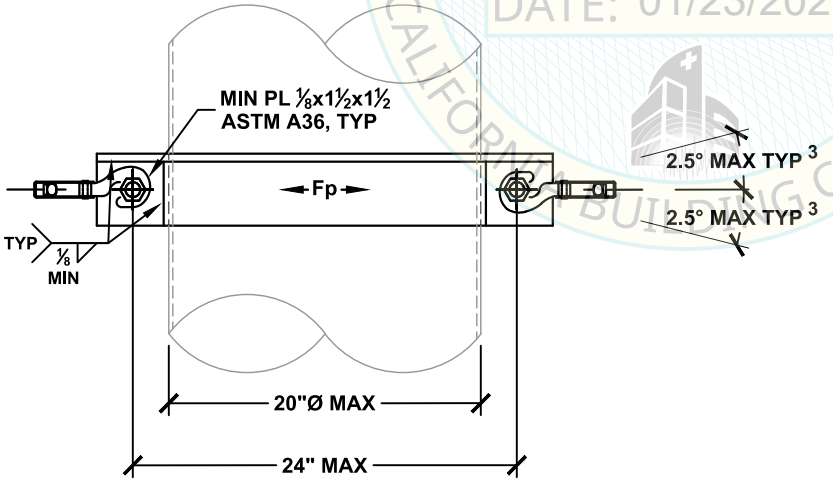

VIEW A-A

NOTES:

1. REF. SECTION A1 FOR GENERAL NOTES.
2. PROVIDE ROD STIFFENERS ONLY WHERE SEISMIC BRACKETS ARE ATTACHED TO THE ROD AND ROD LENGTH (L) EXCEEDS 18". REF. APPROPRIATE M10 PAGES FOR DETAILS.
3. ANGLE MAY BE INCREASED TO 15°, REF. PAGE A5.0.

REVIEWED FOR CODE COMPLIANCE
OPM-0043
BY: William Staehlin
DATE: 01/23/2023
CALIFORNIA BUILDING CODE, 2022

MASON WEST
1601 E. Miraloma Ave. Placentia, CA 92870
TEL (714) 630 - 0701, www.masonwest.com

Jiefu "Jeff" Zhang, SE
California SE No. S5270

PAGE
D8.10

HANGER ROD DIAMETER = 3/8"	FACTORY-BUILT VENT DUCT LONGITUDINAL SEISMIC CABLE BRACING SYSTEM 30 PLF MAX	KIT OPTIONS TC0L

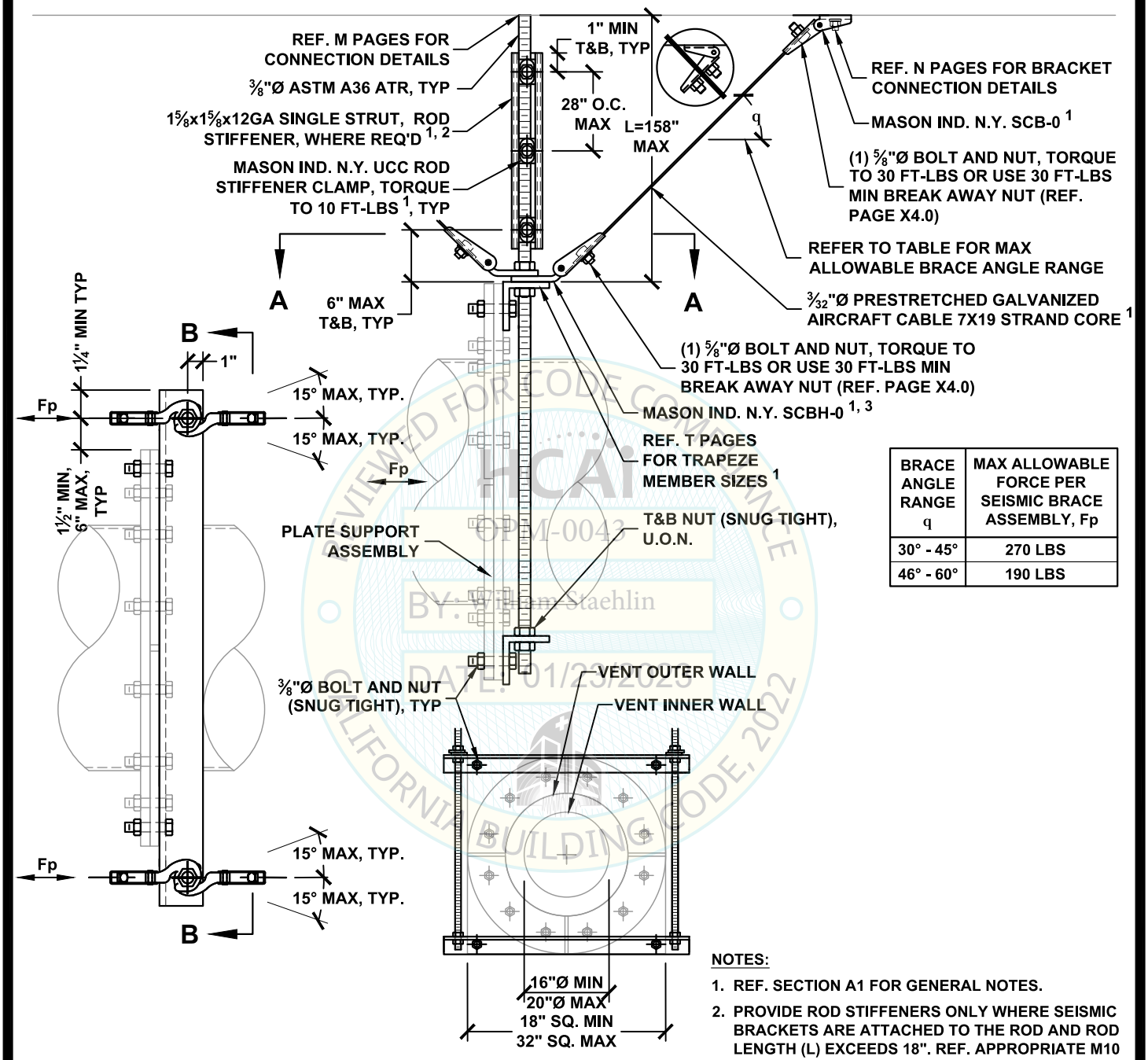

BRACE ANGLE RANGE q	MAX ALLOWABLE FORCE PER SEISMIC BRACE ASSEMBLY, Fp
30° - 45°	270 LBS
46° - 60°	190 LBS

VIEW A-A

VIEW B-B

NOTES:

1. REF. SECTION A1 FOR GENERAL NOTES.
2. PROVIDE ROD STIFFENERS ONLY WHERE SEISMIC BRACKETS ARE ATTACHED TO THE ROD AND ROD LENGTH (L) EXCEEDS 18". REF. APPROPRIATE M10 PAGES FOR DETAILS.
3. REF. PAGE A6.0 - A6.2 FOR ALTERNATE ARRANGEMENTS OF SEISMIC BRACES AND ANGLE MEMBER AS TRAPEZE.

REVIEWED FOR CODE COMPLIANCE HCAi OPM-0043 BY: William Staehlin DATE: 01/23/2023 CALIFORNIA BUILDING CODE, 2022

MASON WEST
1601 E. Miraloma Ave. Placentia, CA 92870
TEL (714) 630 - 0701, www.masonwest.com

Jiefu "Jeff" Zhang, SE
California SE No. S5270

PAGE **D8.11**

HANGER ROD DIAMETER = ⅜"	FACTORY-BUILT VENT DUCT ALL-DIRECTIONAL SEISMIC CABLE BRACING SYSTEM 30 PLF MAX	KIT OPTIONS TC0A

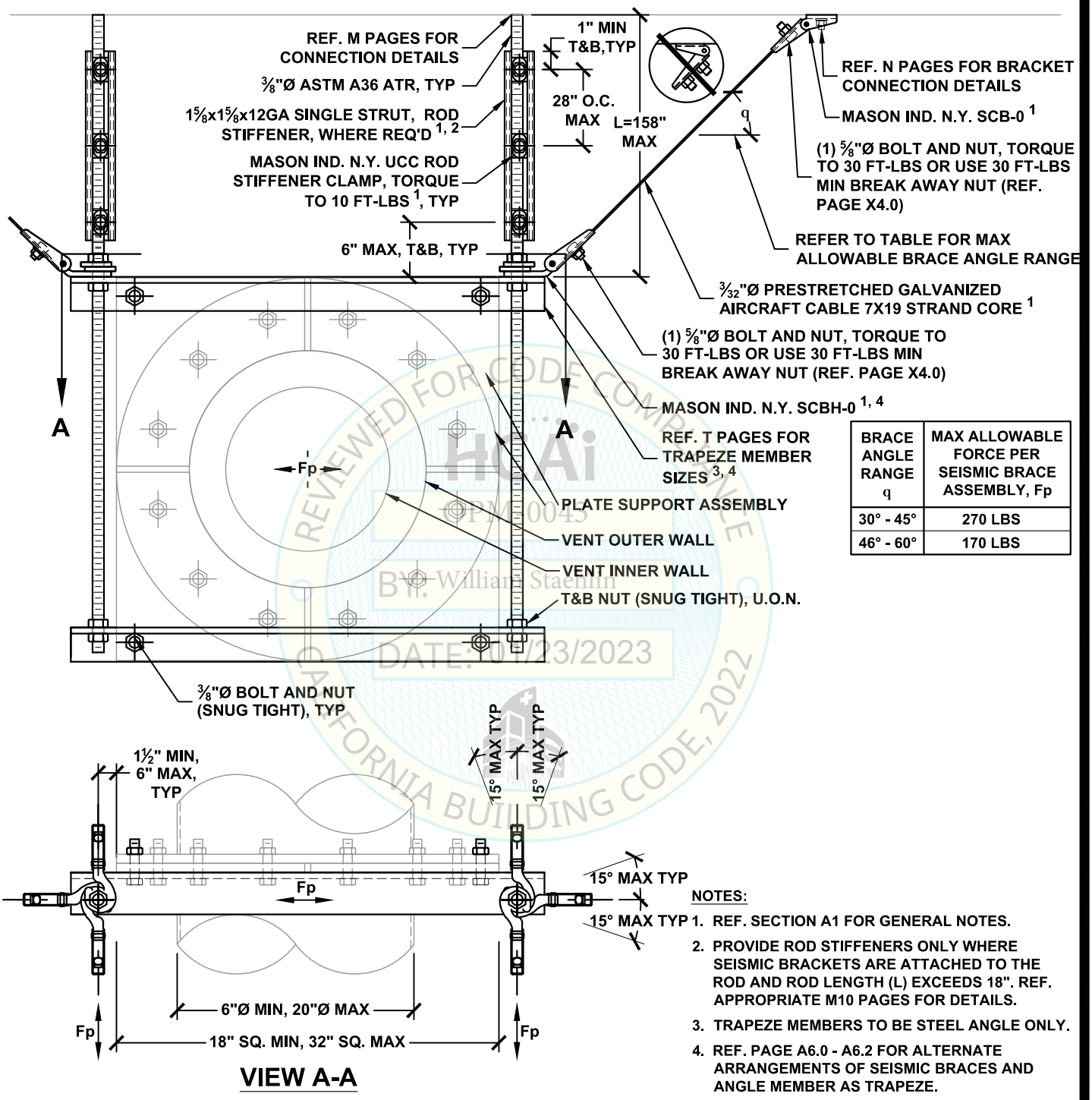

BRACE ANGLE RANGE q	MAX ALLOWABLE FORCE PER SEISMIC BRACE ASSEMBLY, Fp
30° - 45°	270 LBS
46° - 60°	170 LBS

VIEW A-A

NOTES:

1. REF. SECTION A1 FOR GENERAL NOTES.
2. PROVIDE ROD STIFFENERS ONLY WHERE SEISMIC BRACKETS ARE ATTACHED TO THE ROD AND ROD LENGTH (L) EXCEEDS 18". REF. APPROPRIATE M10 PAGES FOR DETAILS.
3. TRAPEZE MEMBERS TO BE STEEL ANGLE ONLY.
4. REF. PAGE A6.0 - A6.2 FOR ALTERNATE ARRANGEMENTS OF SEISMIC BRACES AND ANGLE MEMBER AS TRAPEZE.

REVIEWED FOR CODE COMPLIANCE
CALIFORNIA BUILDING CODE, 2022
HCAi
OPM-0043
BY: William Staehlin
DATE: 01/23/2023

MASON WEST
1601 E. Miraloma Ave. Placentia, CA 92870
TEL (714) 630 - 0701, www.masonwest.com

Jiefu "Jeff" Zhang, SE
California SE No. S5270

PAGE
D8.12

HANGER ROD DIAMETER = ½"	FACTORY-BUILT VENT DUCT TRANSVERSE SEISMIC CABLE BRACING SYSTEM 60 PLF MAX	KIT OPTIONS TC1T

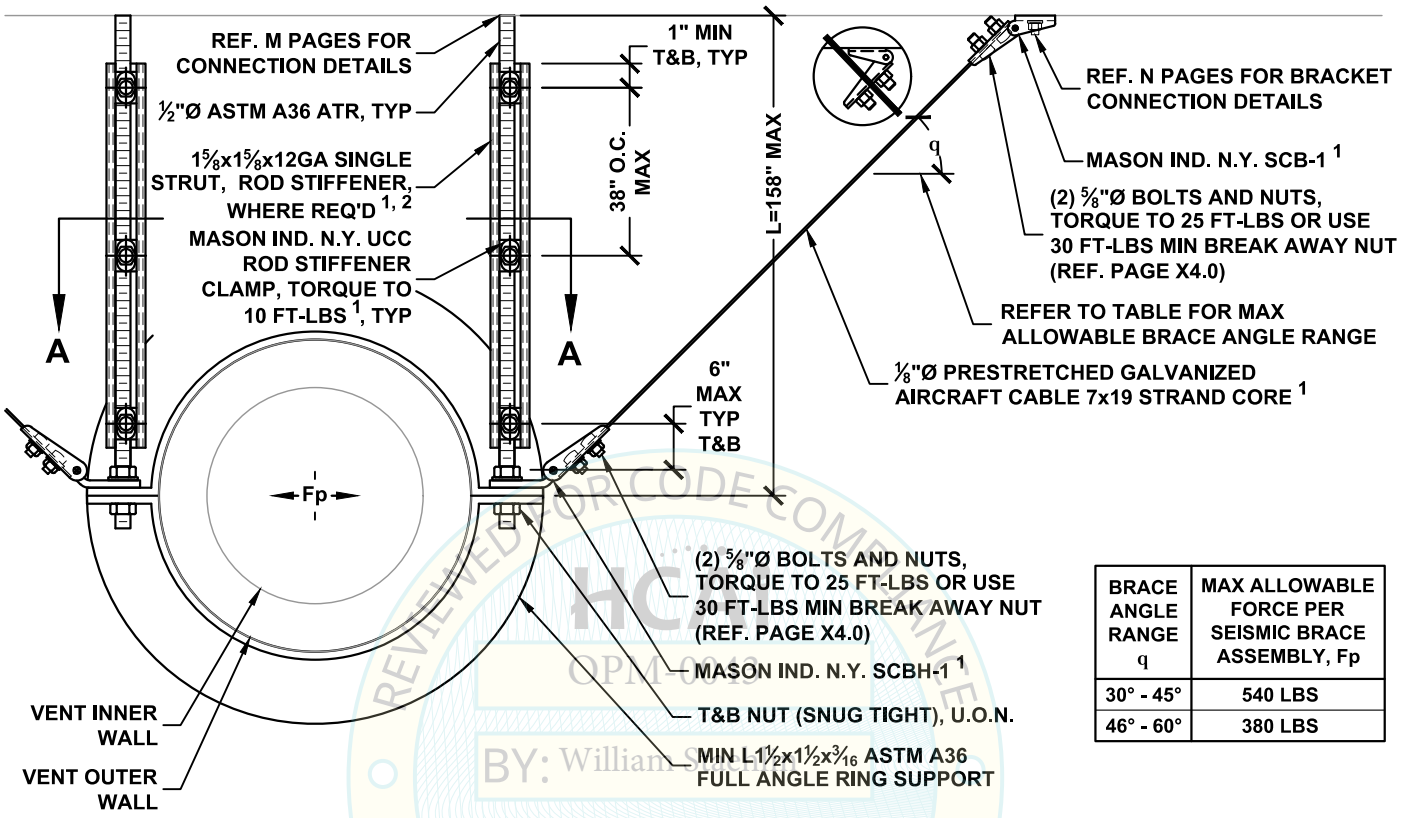

BRACE ANGLE RANGE q	MAX ALLOWABLE FORCE PER SEISMIC BRACE ASSEMBLY, Fp
30° - 45°	540 LBS
46° - 60°	380 LBS

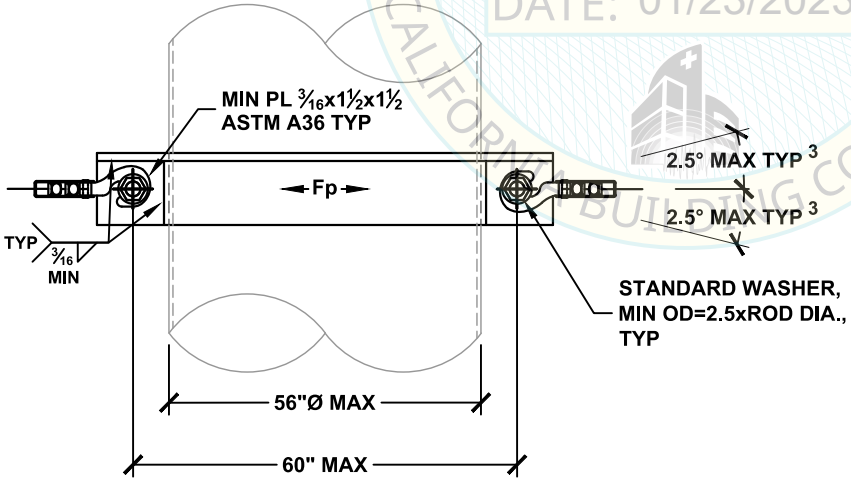

VIEW A-A

NOTES:

1. REF. SECTION A1 FOR GENERAL NOTES.
2. PROVIDE ROD STIFFENERS ONLY WHERE SEISMIC BRACKETS ARE ATTACHED TO THE ROD AND ROD LENGTH (L) EXCEEDS 25". REF. APPROPRIATE M10 PAGES FOR DETAILS.
3. ANGLE MAY BE INCREASED TO 15°, REF. PAGE A5.0.

REVIEWED FOR CODE COMPLIANCE
OPM-0043
BY: William Staehlin
DATE: 01/23/2023
CALIFORNIA BUILDING CODE, 2022

MASON WEST
1601 E. Miraloma Ave. Placentia, CA 92870
TEL (714) 630 - 0701, www.masonwest.com

Jiefu "Jeff" Zhang, SE
California SE No. S5270

PAGE
D8.20

HANGER ROD DIAMETER = ½"	FACTORY-BUILT VENT DUCT LONGITUDINAL SEISMIC CABLE BRACING SYSTEM 60 PLF MAX	KIT OPTIONS TC1L

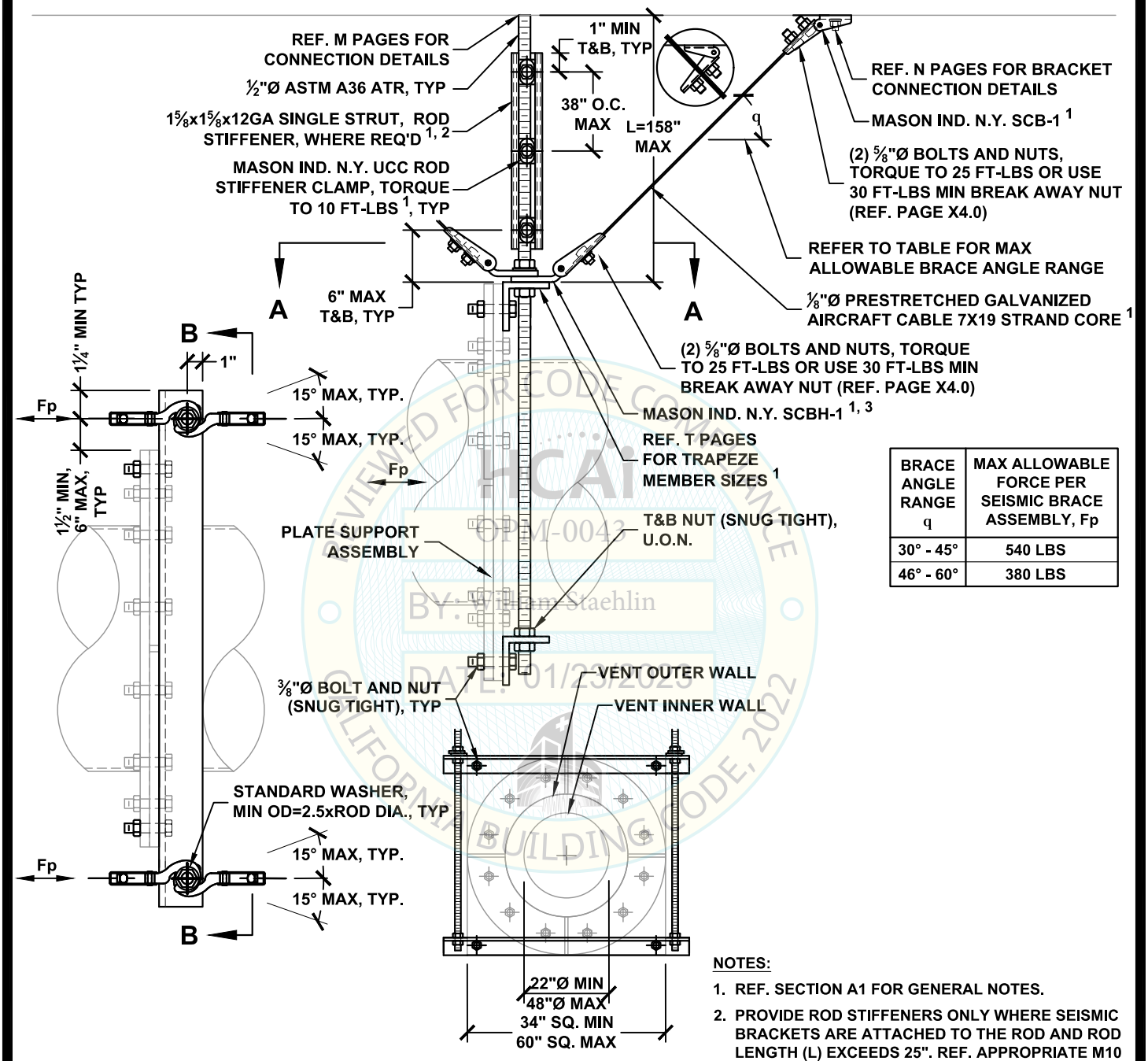

BRACE ANGLE RANGE q	MAX ALLOWABLE FORCE PER SEISMIC BRACE ASSEMBLY, Fp
30° - 45°	540 LBS
46° - 60°	380 LBS

VIEW A-A **VIEW B-B**

NOTES:

1. REF. SECTION A1 FOR GENERAL NOTES.
2. PROVIDE ROD STIFFENERS ONLY WHERE SEISMIC BRACKETS ARE ATTACHED TO THE ROD AND ROD LENGTH (L) EXCEEDS 25". REF. APPROPRIATE M10 PAGES FOR DETAILS.
3. REF. PAGE A6.0 - A6.2 FOR ALTERNATE ARRANGEMENTS OF SEISMIC BRACES AND ANGLE MEMBER AS TRAPEZE.

REVIEWED FOR CODE COMPLIANCE HCAI OPM-0043 BY: William Staehlin DATE: 01/23/2023 CALIFORNIA BUILDING CODE, 2022

MASON WEST
1601 E. Miraloma Ave. Placentia, CA 92870
TEL (714) 630 - 0701, www.masonwest.com

Jiefu "Jeff" Zhang, SE
California SE No. S5270

PAGE **D8.21**

HANGER ROD DIAMETER = ½"	FACTORY-BUILT VENT DUCT ALL-DIRECTIONAL SEISMIC CABLE BRACING SYSTEM 60 PLF MAX	KIT OPTIONS TC1A

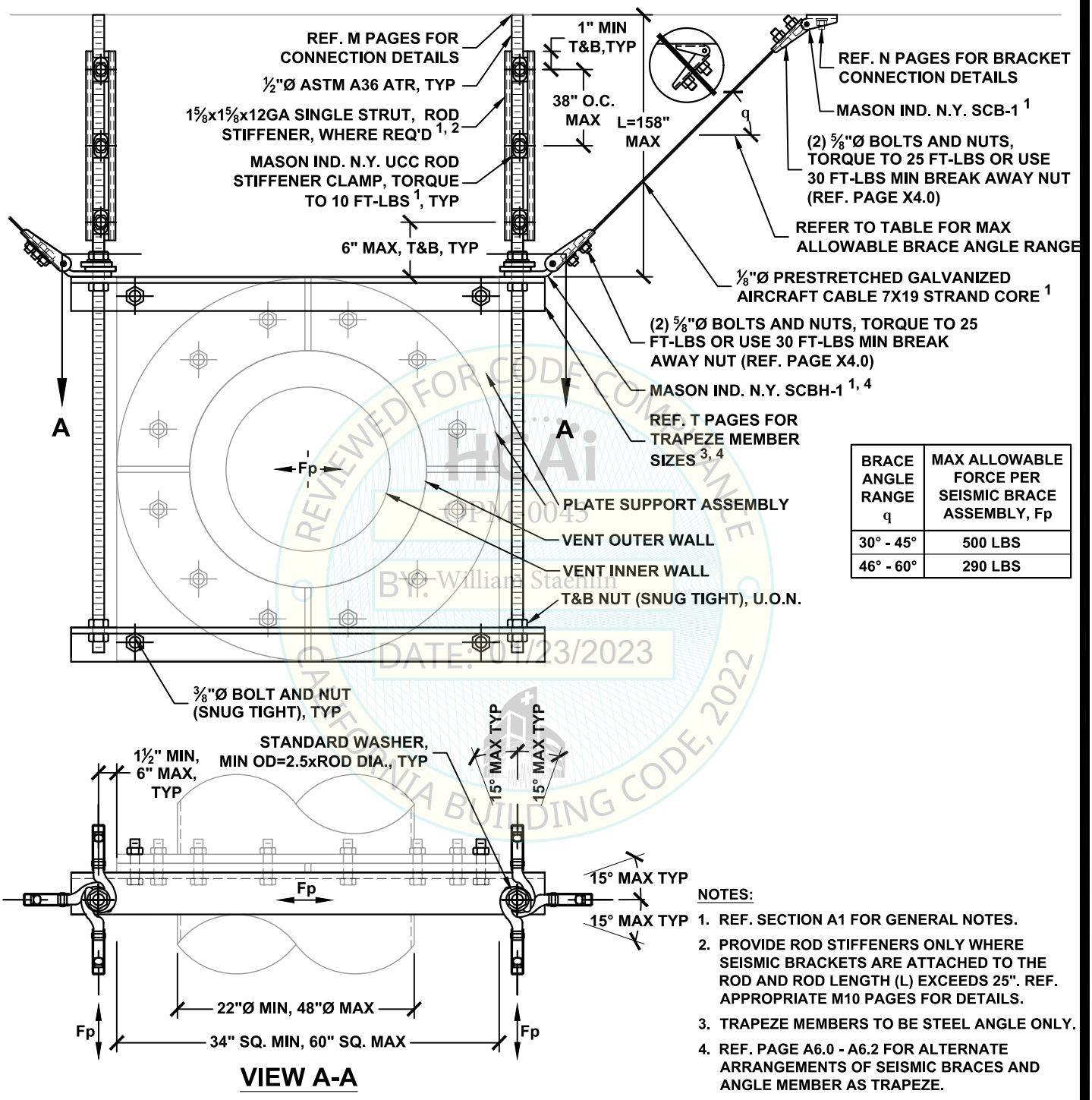

VIEW A-A

BRACE ANGLE RANGE q	MAX ALLOWABLE FORCE PER SEISMIC BRACE ASSEMBLY, Fp
30° - 45°	500 LBS
46° - 60°	290 LBS

NOTES:

1. REF. SECTION A1 FOR GENERAL NOTES.
2. PROVIDE ROD STIFFENERS ONLY WHERE SEISMIC BRACKETS ARE ATTACHED TO THE ROD AND ROD LENGTH (L) EXCEEDS 25". REF. APPROPRIATE M10 PAGES FOR DETAILS.
3. TRAPEZE MEMBERS TO BE STEEL ANGLE ONLY.
4. REF. PAGE A6.0 - A6.2 FOR ALTERNATE ARRANGEMENTS OF SEISMIC BRACES AND ANGLE MEMBER AS TRAPEZE.

REVIEWED FOR CODE COMPLIANCE CALIFORNIA BUILDING CODE, 2022
HCAi
OPM-0043
By: William Staehlin
DATE: 01/23/2023

MASON WEST
1601 E. Miraloma Ave. Placentia, CA 92870
TEL (714) 630 - 0701, www.masonwest.com

Jiefu "Jeff" Zhang, SE
California SE No. S5270

PAGE
D8.22

HANGER ROD DIAMETER = 3/8"	IN-LINE DUCT DEVICE SEISMIC SOLID BRACING SYSTEM 250 LB MAX	KIT OPTIONS TS12A TS1220A TSH312A TSH320A

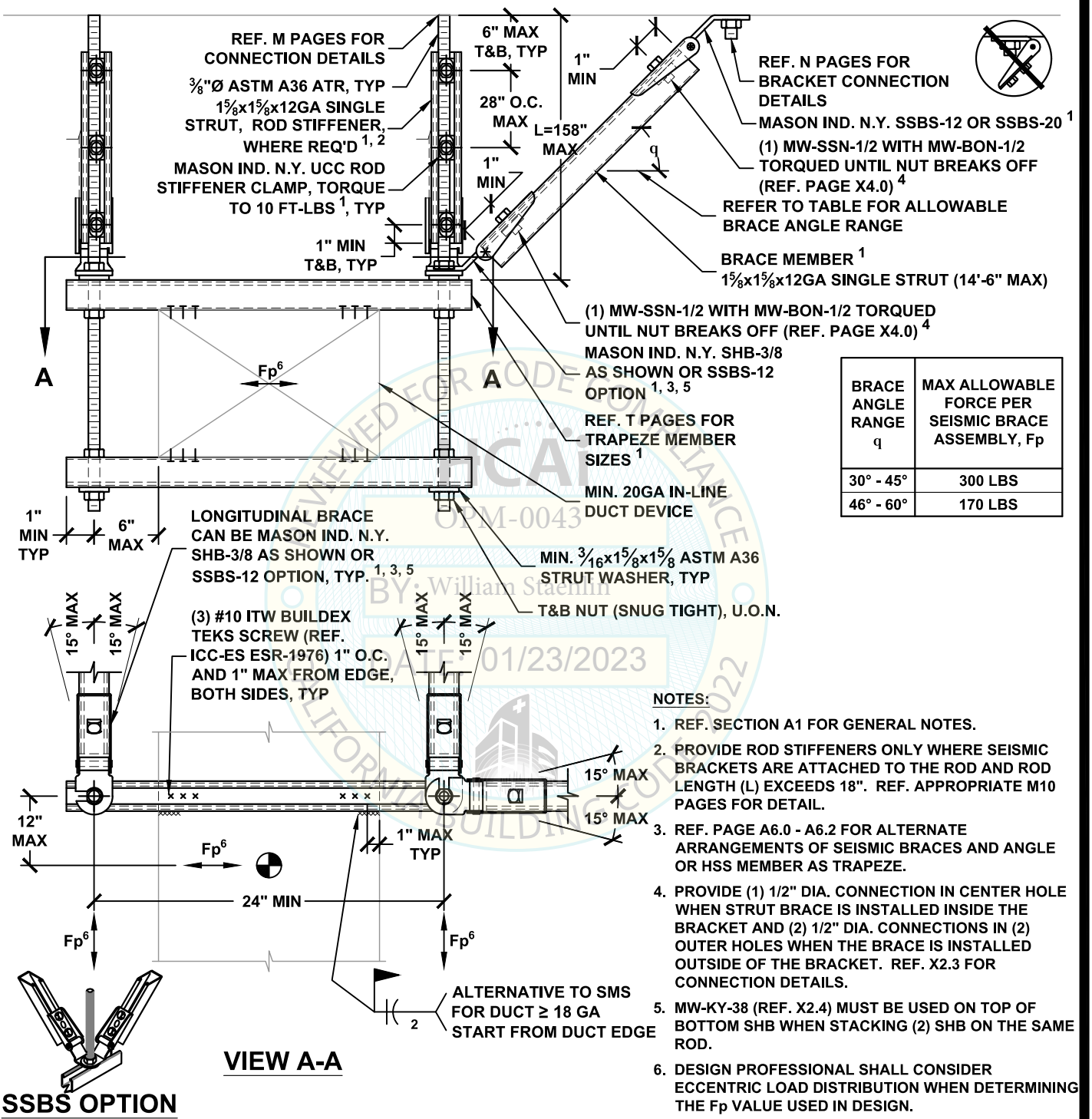

BRACE ANGLE RANGE q	MAX ALLOWABLE FORCE PER SEISMIC BRACE ASSEMBLY, Fp
30° - 45°	300 LBS
46° - 60°	170 LBS

VIEW A-A

SSBS OPTION

NOTES:

1. REF. SECTION A1 FOR GENERAL NOTES.
2. PROVIDE ROD STIFFENERS ONLY WHERE SEISMIC BRACKETS ARE ATTACHED TO THE ROD AND ROD LENGTH (L) EXCEEDS 18". REF. APPROPRIATE M10 PAGES FOR DETAIL.
3. REF. PAGE A6.0 - A6.2 FOR ALTERNATE ARRANGEMENTS OF SEISMIC BRACES AND ANGLE OR HSS MEMBER AS TRAPEZE.
4. PROVIDE (1) 1/2" DIA. CONNECTION IN CENTER HOLE WHEN STRUT BRACE IS INSTALLED INSIDE THE BRACKET AND (2) 1/2" DIA. CONNECTIONS IN (2) OUTER HOLES WHEN THE BRACE IS INSTALLED OUTSIDE OF THE BRACKET. REF. X2.3 FOR CONNECTION DETAILS.
5. MW-KY-38 (REF. X2.4) MUST BE USED ON TOP OF BOTTOM SHB WHEN STACKING (2) SHB ON THE SAME ROD.
6. DESIGN PROFESSIONAL SHALL CONSIDER ECCENTRIC LOAD DISTRIBUTION WHEN DETERMINING THE Fp VALUE USED IN DESIGN.

ICC-ES REVIEWED FOR CODE COMPLIANCE OPM-0043 BY: William Staehlin DATE: 01/23/2023 CALIFORNIA BUILDING CODE 2022

MASON WEST
1601 E. Miraloma Ave. Placentia, CA 92870
TEL (714) 630 - 0701, www.masonwest.com

Jiefu "Jeff" Zhang, SE
California SE No. S5270

HANGER ROD DIAMETER = 3/8"

IN-LINE DUCT DEVICE SEISMIC SOLID BRACING SYSTEM 250 LB MAX

KIT OPTIONS
S12SE
S1220SE
SH312SE
SH320SE

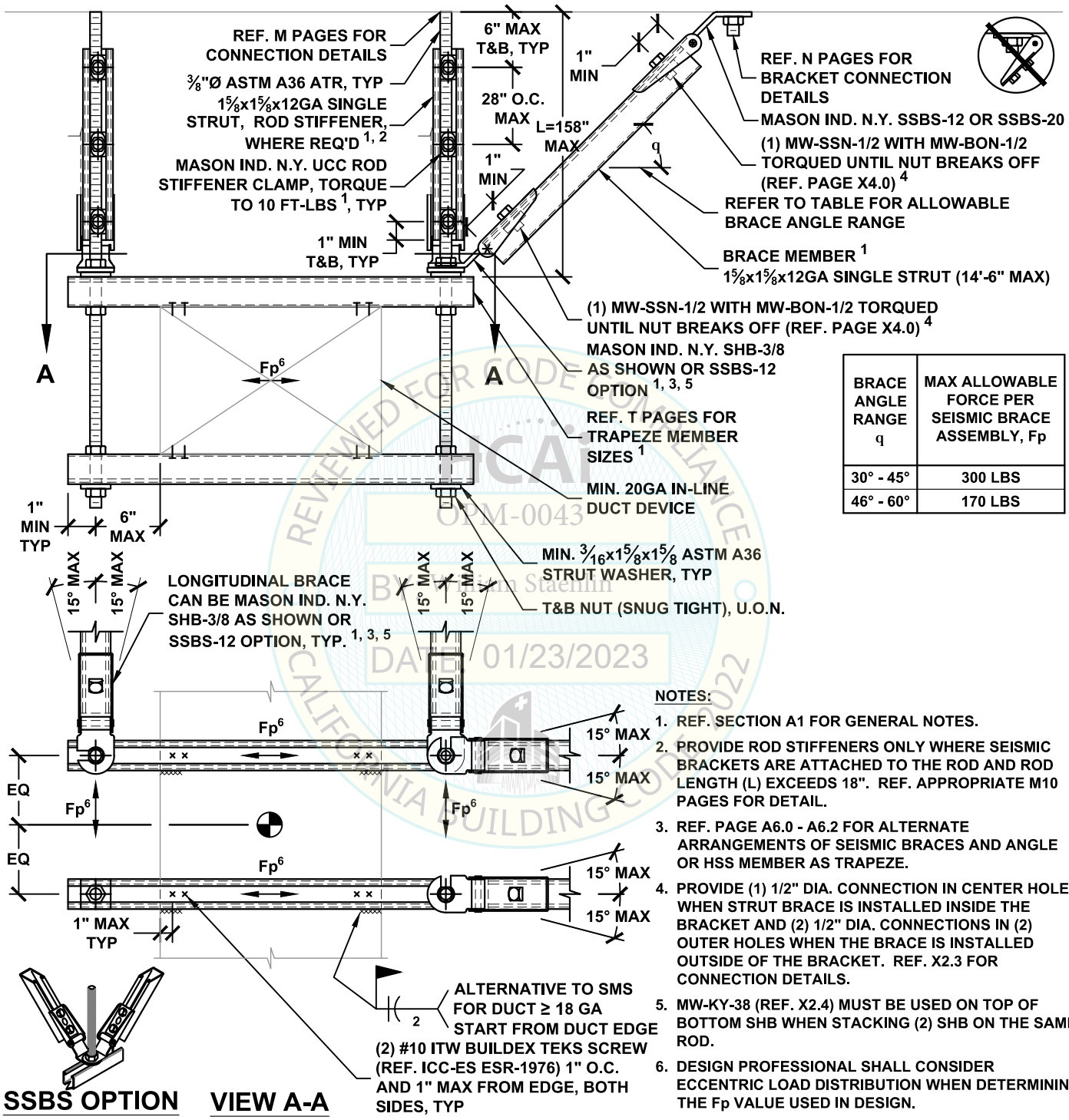

BRACE ANGLE RANGE q	MAX ALLOWABLE FORCE PER SEISMIC BRACE ASSEMBLY, Fp
30° - 45°	300 LBS
46° - 60°	170 LBS

SSBS OPTION **VIEW A-A**

NOTES:

1. REF. SECTION A1 FOR GENERAL NOTES.
2. PROVIDE ROD STIFFENERS ONLY WHERE SEISMIC BRACKETS ARE ATTACHED TO THE ROD AND ROD LENGTH (L) EXCEEDS 18". REF. APPROPRIATE M10 PAGES FOR DETAIL.
3. REF. PAGE A6.0 - A6.2 FOR ALTERNATE ARRANGEMENTS OF SEISMIC BRACES AND ANGLE OR HSS MEMBER AS TRAPEZE.
4. PROVIDE (1) 1/2" DIA. CONNECTION IN CENTER HOLE WHEN STRUT BRACE IS INSTALLED INSIDE THE BRACKET AND (2) 1/2" DIA. CONNECTIONS IN (2) OUTER HOLES WHEN THE BRACE IS INSTALLED OUTSIDE OF THE BRACKET. REF. X2.3 FOR CONNECTION DETAILS.
5. MW-KY-38 (REF. X2.4) MUST BE USED ON TOP OF BOTTOM SHB WHEN STACKING (2) SHB ON THE SAME ROD.
6. DESIGN PROFESSIONAL SHALL CONSIDER ECCENTRIC LOAD DISTRIBUTION WHEN DETERMINING THE Fp VALUE USED IN DESIGN.

ICC-ES REVIEWED FOR CODE COMPLIANCE
OPM-0043
By William Staehlin
DATE 01/23/2023
CALIFORNIA BUILDING CODE 2022

MASON WEST
1601 E. Miraloma Ave. Placentia, CA 92870
TEL (714) 630 - 0701, www.masonwest.com

Jiefu "Jeff" Zhang, SE
California SE No. S5270

PAGE
D9.11

HANGER ROD DIAMETER = ½"	IN-LINE DUCT DEVICE SEISMIC SOLID BRACING SYSTEM 1000 LB MAX	KIT OPTIONS S12SE S1220SE SH412SE SH420SE

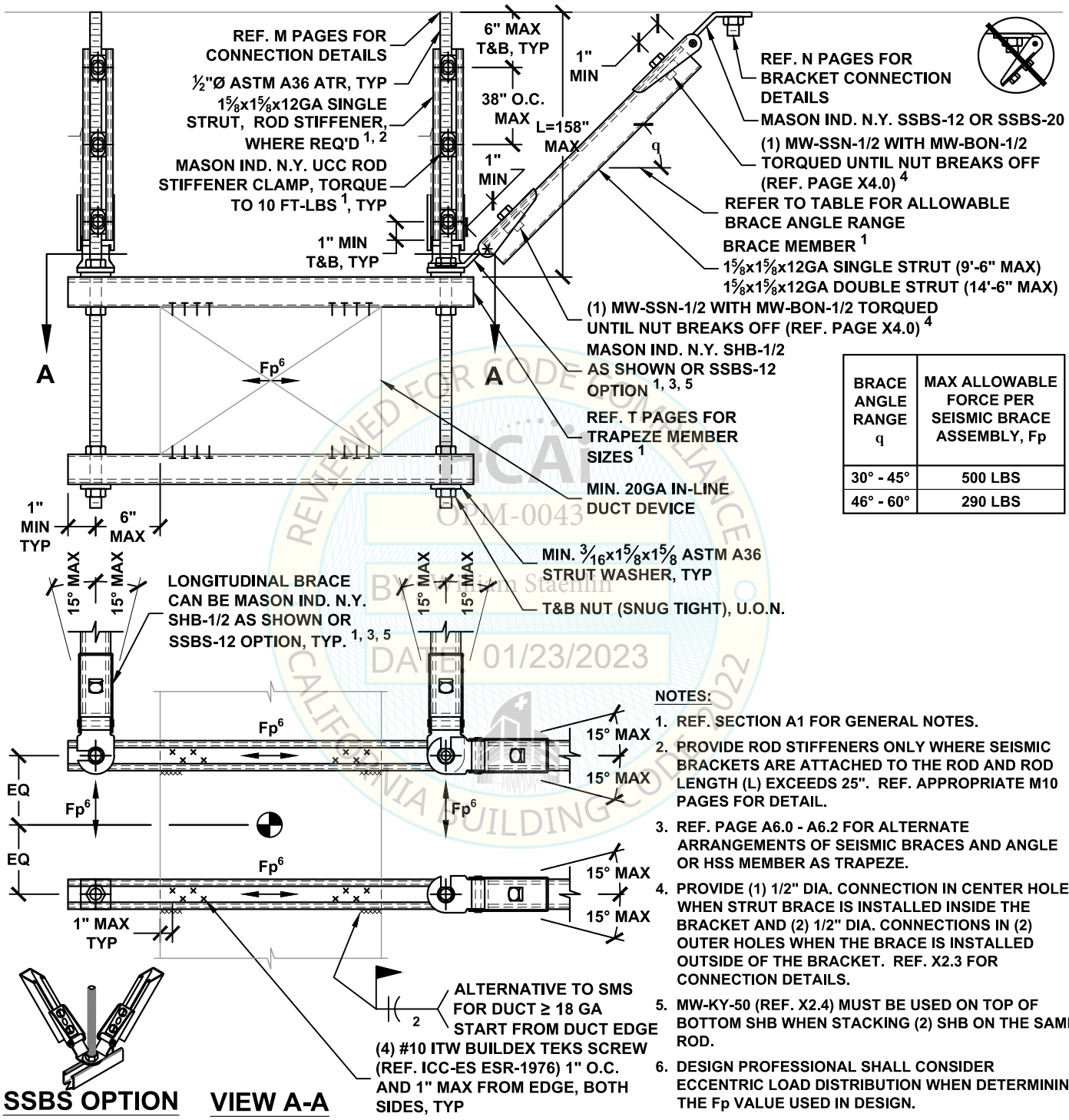

BRACE ANGLE RANGE q	MAX ALLOWABLE FORCE PER SEISMIC BRACE ASSEMBLY, Fp
30° - 45°	500 LBS
46° - 60°	290 LBS

REVIEWED FOR CODE COMPLIANCE
HCAI
OPM-0043
BY William Staehlin
DATE 01/23/2023
CALIFORNIA BUILDING CODE 2022

NOTES:

1. REF. SECTION A1 FOR GENERAL NOTES.
2. PROVIDE ROD STIFFENERS ONLY WHERE SEISMIC BRACKETS ARE ATTACHED TO THE ROD AND ROD LENGTH (L) EXCEEDS 25". REF. APPROPRIATE M10 PAGES FOR DETAIL.
3. REF. PAGE A6.0 - A6.2 FOR ALTERNATE ARRANGEMENTS OF SEISMIC BRACES AND ANGLE OR HSS MEMBER AS TRAPEZE.
4. PROVIDE (1) 1/2" DIA. CONNECTION IN CENTER HOLE WHEN STRUT BRACE IS INSTALLED INSIDE THE BRACKET AND (2) 1/2" DIA. CONNECTIONS IN (2) OUTER HOLES WHEN THE BRACE IS INSTALLED OUTSIDE OF THE BRACKET. REF. X2.3 FOR CONNECTION DETAILS.
5. MW-KY-50 (REF. X2.4) MUST BE USED ON TOP OF BOTTOM SHB WHEN STACKING (2) SHB ON THE SAME ROD.
6. DESIGN PROFESSIONAL SHALL CONSIDER ECCENTRIC LOAD DISTRIBUTION WHEN DETERMINING THE Fp VALUE USED IN DESIGN.

MASON WEST
1601 E. Miraloma Ave. Placentia, CA 92870
TEL (714) 630 - 0701, www.masonwest.com

Jiefu "Jeff" Zhang, SE
California SE No. S5270

HANGER ROD DIAMETER = 5/8"	IN-LINE DUCT DEVICE SEISMIC SOLID BRACING SYSTEM 2000 LB MAX	KIT OPTIONS S20SE S2012SE SH512SE SH520SE

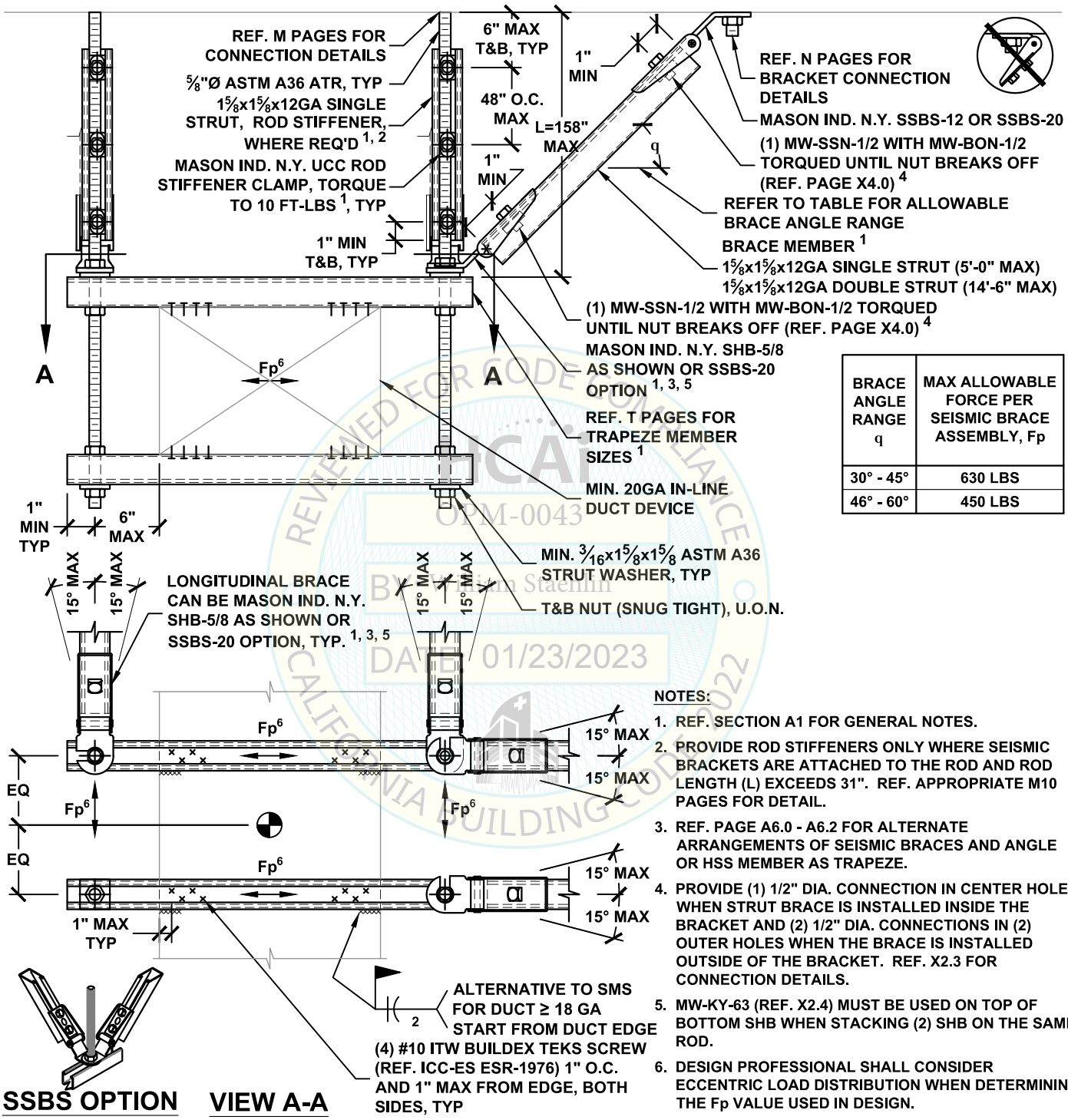

BRACE ANGLE RANGE q	MAX ALLOWABLE FORCE PER SEISMIC BRACE ASSEMBLY, Fp
30° - 45°	630 LBS
46° - 60°	450 LBS

NOTES:

1. REF. SECTION A1 FOR GENERAL NOTES.
2. PROVIDE ROD STIFFENERS ONLY WHERE SEISMIC BRACKETS ARE ATTACHED TO THE ROD AND ROD LENGTH (L) EXCEEDS 31". REF. APPROPRIATE M10 PAGES FOR DETAIL.
3. REF. PAGE A6.0 - A6.2 FOR ALTERNATE ARRANGEMENTS OF SEISMIC BRACES AND ANGLE OR HSS MEMBER AS TRAPEZE.
4. PROVIDE (1) 1/2" DIA. CONNECTION IN CENTER HOLE WHEN STRUT BRACE IS INSTALLED INSIDE THE BRACKET AND (2) 1/2" DIA. CONNECTIONS IN (2) OUTER HOLES WHEN THE BRACE IS INSTALLED OUTSIDE OF THE BRACKET. REF. X2.3 FOR CONNECTION DETAILS.
5. MW-KY-63 (REF. X2.4) MUST BE USED ON TOP OF BOTTOM SHB WHEN STACKING (2) SHB ON THE SAME ROD.
6. DESIGN PROFESSIONAL SHALL CONSIDER ECCENTRIC LOAD DISTRIBUTION WHEN DETERMINING THE Fp VALUE USED IN DESIGN.

ICC-ES REVIEWED FOR CODE COMPLIANCE
OPM-0043
BY William Staehlin
DATE 01/23/2023
CALIFORNIA BUILDING CODE 2022

MASON WEST
1601 E. Miraloma Ave. Placentia, CA 92870
TEL (714) 630 - 0701, www.masonwest.com

Jiefu "Jeff" Zhang, SE
California SE No. S5270

PAGE
D9.13

HANGER ROD DIAMETER = 3/8"	IN-LINE DUCT DEVICE SEISMIC CABLE BRACING SYSTEM 250 LB MAX	KIT OPTIONS C0X

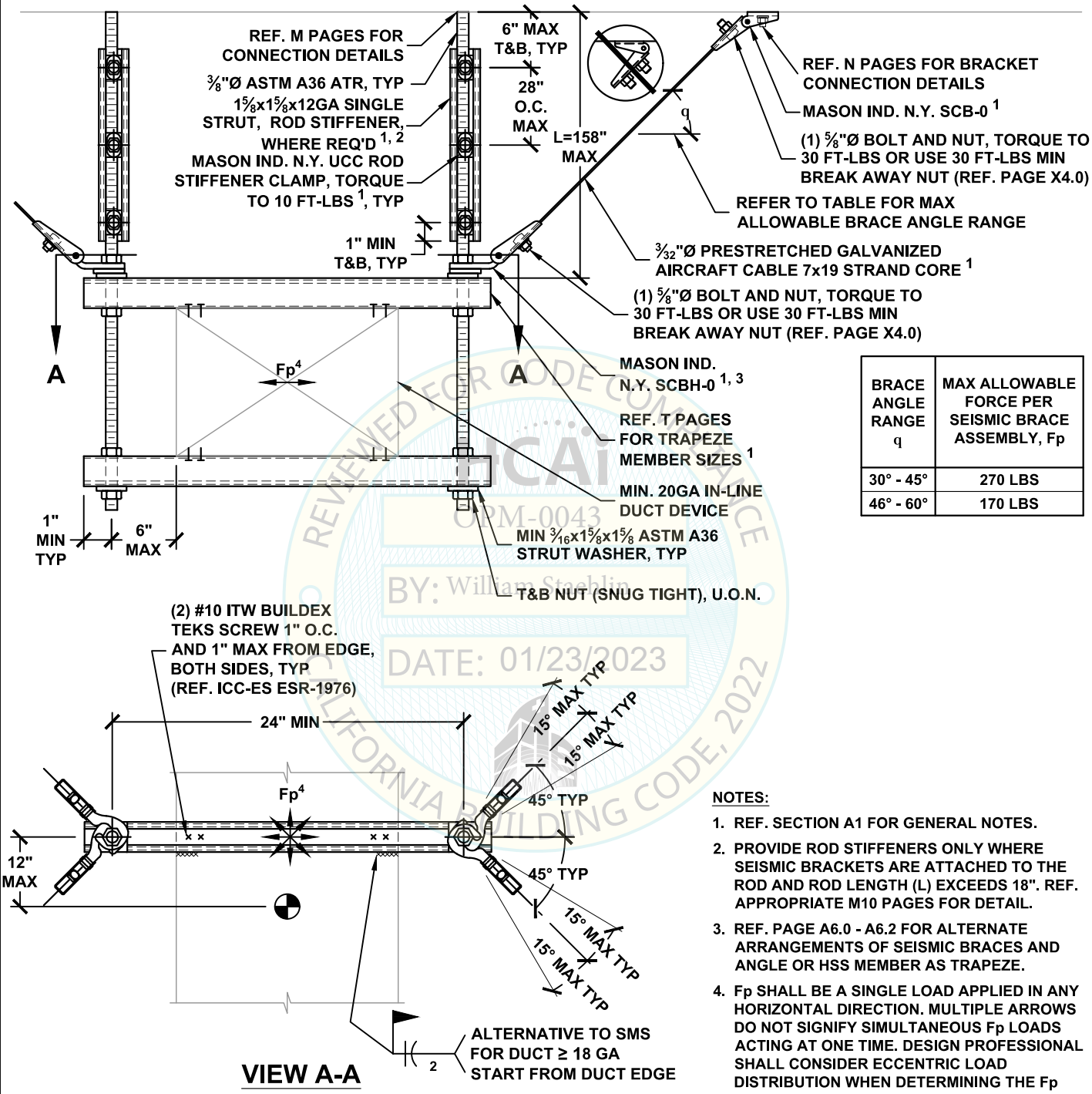

VIEW A-A

BRACE ANGLE RANGE q	MAX ALLOWABLE FORCE PER SEISMIC BRACE ASSEMBLY, Fp
30° - 45°	270 LBS
46° - 60°	170 LBS

REVIEWED FOR CODE COMPLIANCE
OSHPD
CALIFORNIA BUILDING CODE, 2022
OPM-0043
BY: William Staehlin
DATE: 01/23/2023

NOTES:

1. REF. SECTION A1 FOR GENERAL NOTES.
2. PROVIDE ROD STIFFENERS ONLY WHERE SEISMIC BRACKETS ARE ATTACHED TO THE ROD AND ROD LENGTH (L) EXCEEDS 18". REF. APPROPRIATE M10 PAGES FOR DETAIL.
3. REF. PAGE A6.0 - A6.2 FOR ALTERNATE ARRANGEMENTS OF SEISMIC BRACES AND ANGLE OR HSS MEMBER AS TRAPEZE.
4. Fp SHALL BE A SINGLE LOAD APPLIED IN ANY HORIZONTAL DIRECTION. MULTIPLE ARROWS DO NOT SIGNIFY SIMULTANEOUS Fp LOADS ACTING AT ONE TIME. DESIGN PROFESSIONAL SHALL CONSIDER ECCENTRIC LOAD DISTRIBUTION WHEN DETERMINING THE Fp VALUE USED IN DESIGN.

MASON WEST
1601 E. Miraloma Ave. Placentia, CA 92870
TEL (714) 630 - 0701, www.masonwest.com

Jiefu "Jeff" Zhang, SE
California SE No. S5270

HANGER ROD DIAMETER = 3/8"	IN-LINE DUCT DEVICE SEISMIC CABLE BRACING SYSTEM 250 LB MAX	KIT OPTIONS C0SE

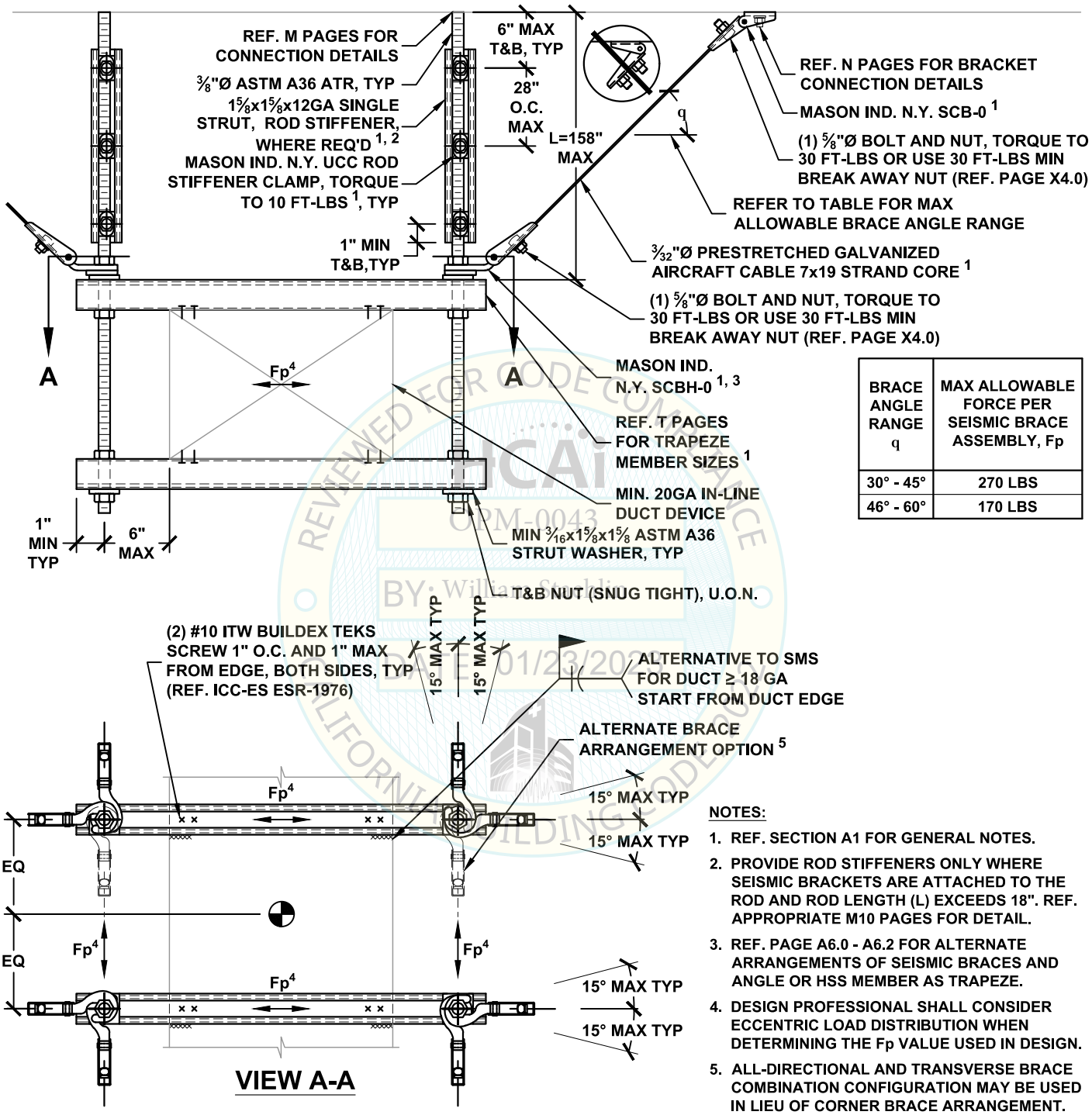

BRACE ANGLE RANGE q	MAX ALLOWABLE FORCE PER SEISMIC BRACE ASSEMBLY, Fp
30° - 45°	270 LBS
46° - 60°	170 LBS

NOTES:

1. REF. SECTION A1 FOR GENERAL NOTES.
2. PROVIDE ROD STIFFENERS ONLY WHERE SEISMIC BRACKETS ARE ATTACHED TO THE ROD AND ROD LENGTH (L) EXCEEDS 18". REF. APPROPRIATE M10 PAGES FOR DETAIL.
3. REF. PAGE A6.0 - A6.2 FOR ALTERNATE ARRANGEMENTS OF SEISMIC BRACES AND ANGLE OR HSS MEMBER AS TRAPEZE.
4. DESIGN PROFESSIONAL SHALL CONSIDER ECCENTRIC LOAD DISTRIBUTION WHEN DETERMINING THE Fp VALUE USED IN DESIGN.
5. ALL-DIRECTIONAL AND TRANSVERSE BRACE COMBINATION CONFIGURATION MAY BE USED IN LIEU OF CORNER BRACE ARRANGEMENT.

REVIEWED FOR CODE COMPLIANCE
OPM-0043
BY: William Staehlin
DATE: 01/23/2023
CALIFORNIA BUILDING CODE 2022

MASON WEST
1601 E. Miraloma Ave. Placentia, CA 92870
TEL (714) 630 - 0701, www.masonwest.com

Jiefu "Jeff" Zhang, SE
California SE No. S5270

PAGE
D10.11

HANGER ROD DIAMETER = ½"	IN-LINE DUCT DEVICE SEISMIC CABLE BRACING SYSTEM 1000 LB MAX	KIT OPTIONS **C1SE**

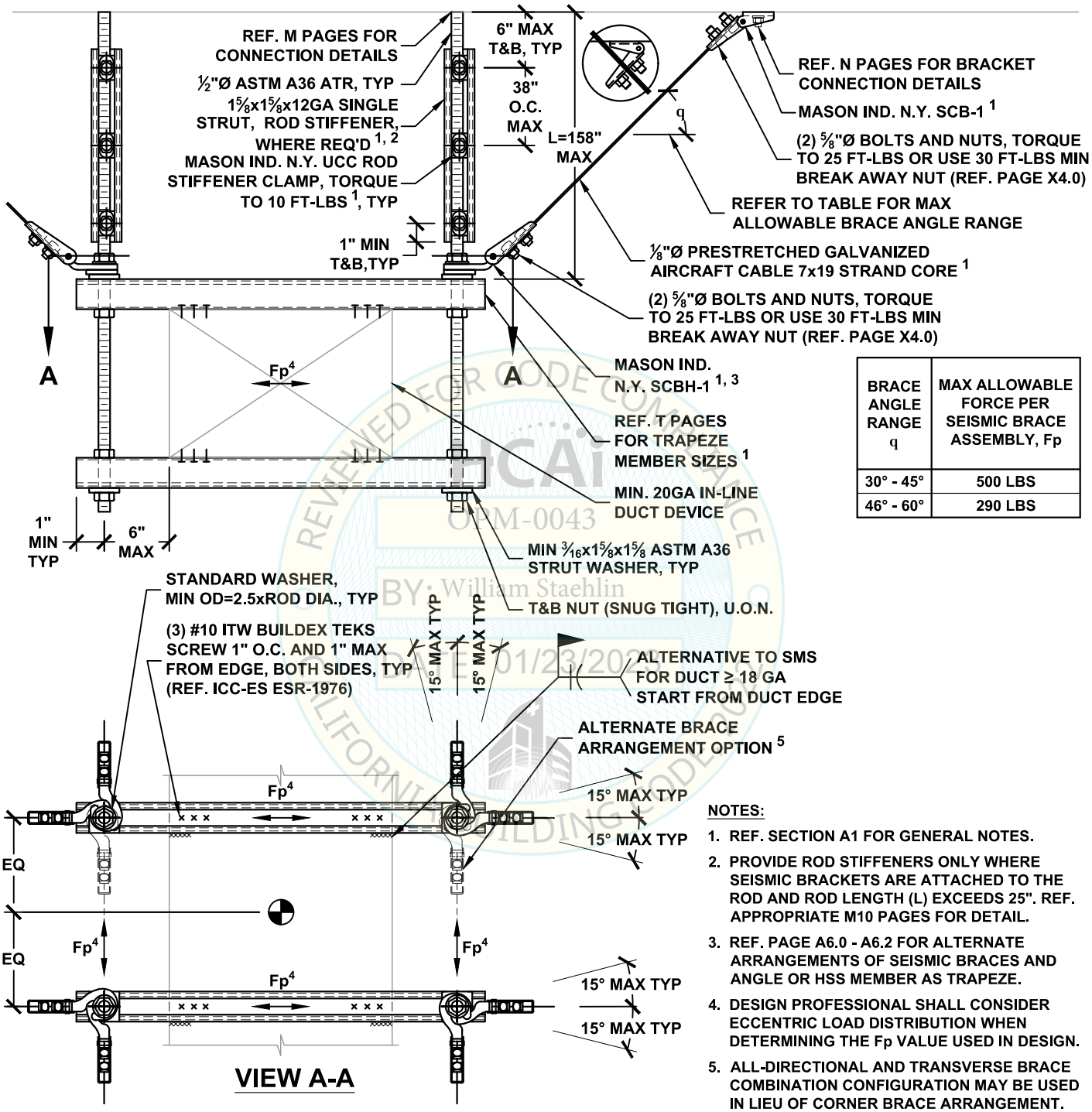

BRACE ANGLE RANGE q	MAX ALLOWABLE FORCE PER SEISMIC BRACE ASSEMBLY, Fp
30° - 45°	500 LBS
46° - 60°	290 LBS

VIEW A-A

NOTES:

1. REF. SECTION A1 FOR GENERAL NOTES.
2. PROVIDE ROD STIFFENERS ONLY WHERE SEISMIC BRACKETS ARE ATTACHED TO THE ROD AND ROD LENGTH (L) EXCEEDS 25". REF. APPROPRIATE M10 PAGES FOR DETAIL.
3. REF. PAGE A6.0 - A6.2 FOR ALTERNATE ARRANGEMENTS OF SEISMIC BRACES AND ANGLE OR HSS MEMBER AS TRAPEZE.
4. DESIGN PROFESSIONAL SHALL CONSIDER ECCENTRIC LOAD DISTRIBUTION WHEN DETERMINING THE Fp VALUE USED IN DESIGN.
5. ALL-DIRECTIONAL AND TRANSVERSE BRACE COMBINATION CONFIGURATION MAY BE USED IN LIEU OF CORNER BRACE ARRANGEMENT.

MASON WEST
1601 E. Miraloma Ave. Placentia, CA 92870
TEL (714) 630 - 0701, www.masonwest.com

Jiefu "Jeff" Zhang, SE
California SE No. S5270

PAGE
D10.12

REVIEWED FOR CODE COMPLIANCE
OPM-0043
BY: William Staehlin
DATE: 01/23/2023

HANGER ROD DIAMETER = 5/8"	IN-LINE DUCT DEVICE SEISMIC CABLE BRACING SYSTEM 2000 LB MAX	KIT OPTIONS C1SE

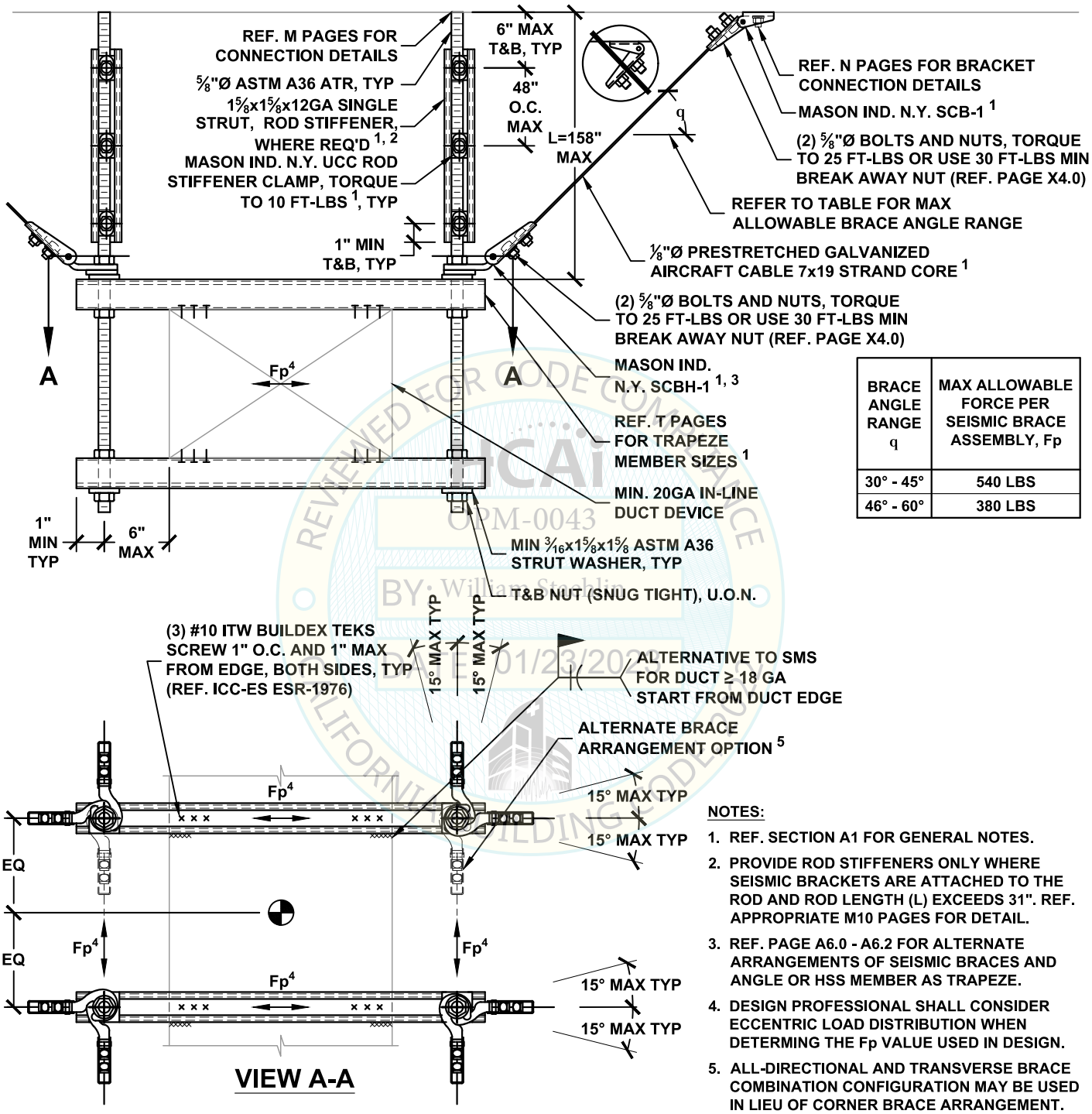

BRACE ANGLE RANGE q	MAX ALLOWABLE FORCE PER SEISMIC BRACE ASSEMBLY, Fp
30° - 45°	540 LBS
46° - 60°	380 LBS

NOTES:

1. REF. SECTION A1 FOR GENERAL NOTES.
2. PROVIDE ROD STIFFENERS ONLY WHERE SEISMIC BRACKETS ARE ATTACHED TO THE ROD AND ROD LENGTH (L) EXCEEDS 31". REF. APPROPRIATE M10 PAGES FOR DETAIL.
3. REF. PAGE A6.0 - A6.2 FOR ALTERNATE ARRANGEMENTS OF SEISMIC BRACES AND ANGLE OR HSS MEMBER AS TRAPEZE.
4. DESIGN PROFESSIONAL SHALL CONSIDER ECCENTRIC LOAD DISTRIBUTION WHEN DETERMING THE Fp VALUE USED IN DESIGN.
5. ALL-DIRECTIONAL AND TRANSVERSE BRACE COMBINATION CONFIGURATION MAY BE USED IN LIEU OF CORNER BRACE ARRANGEMENT.

REVIEWED FOR CODE COMPLIANCE
OPM-0043
BY: William Staehlin
DATE: 01/23/2023
CALIFORNIA BUILDING CODE 2022

MASON WEST
1601 E. Miraloma Ave. Placentia, CA 92870
TEL (714) 630 - 0701, www.masonwest.com

Jiefu "Jeff" Zhang, SE
California SE No. S5270

PAGE
D10.13

HANGER ROD DIAMETER = 3/8"

SUSPENDED EQUIPMENT SEISMIC SOLID BRACING SYSTEM 185 LB MAX VERTICAL LOAD PER HANGER

KIT OPTIONS
S12SE
S1220SE
SH312SE
SH320SE

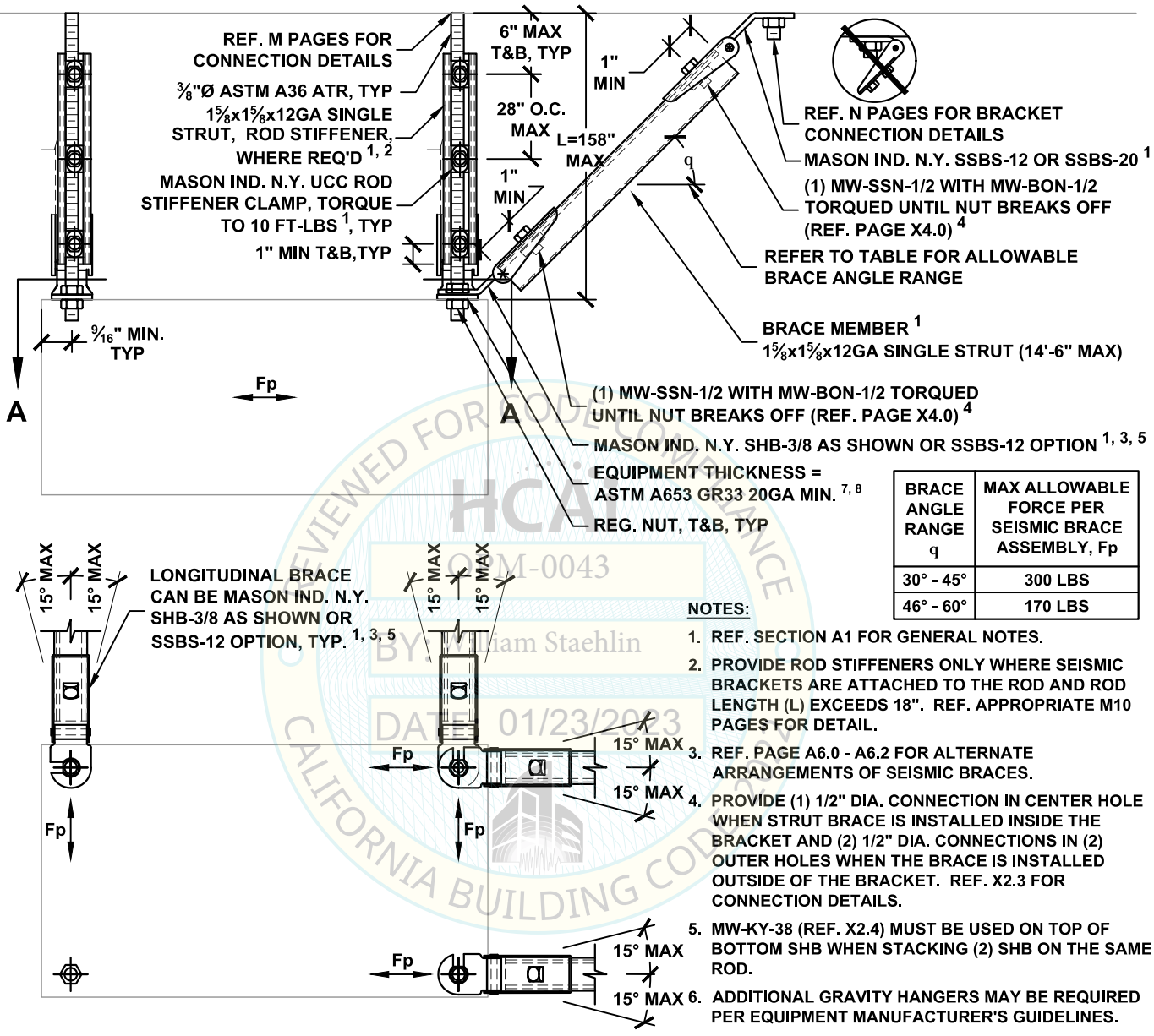

BRACE ANGLE RANGE q	MAX ALLOWABLE FORCE PER SEISMIC BRACE ASSEMBLY, Fp
30° - 45°	300 LBS
46° - 60°	170 LBS

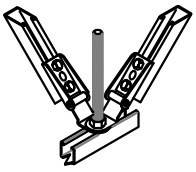

SSBS OPTION

VIEW A-A

NOTES:

1. REF. SECTION A1 FOR GENERAL NOTES.
2. PROVIDE ROD STIFFENERS ONLY WHERE SEISMIC BRACKETS ARE ATTACHED TO THE ROD AND ROD LENGTH (L) EXCEEDS 18". REF. APPROPRIATE M10 PAGES FOR DETAIL.
3. REF. PAGE A6.0 - A6.2 FOR ALTERNATE ARRANGEMENTS OF SEISMIC BRACES.
4. PROVIDE (1) 1/2" DIA. CONNECTION IN CENTER HOLE WHEN STRUT BRACE IS INSTALLED INSIDE THE BRACKET AND (2) 1/2" DIA. CONNECTIONS IN (2) OUTER HOLES WHEN THE BRACE IS INSTALLED OUTSIDE OF THE BRACKET. REF. X2.3 FOR CONNECTION DETAILS.
5. MW-KY-38 (REF. X2.4) MUST BE USED ON TOP OF BOTTOM SHB WHEN STACKING (2) SHB ON THE SAME ROD.
6. ADDITIONAL GRAVITY HANGERS MAY BE REQUIRED PER EQUIPMENT MANUFACTURER'S GUIDELINES.
7. ALTERNATE TO SHOWN HANGER/BRACE ATTACHMENT TO EQUIPMENT, HANGER RODS/BRACES MAY BE ATTACHED PER EQUIPMENT OSP OR TO EQUIPMENT MANU. CLIPS WITH ASTM A653 GR33 20GA MIN. THICKNESS & 9/16" MIN. STEEL EDGE DISTANCE.
8. ATTACHMENT TO THE EQUIPMENT SHALL BE DESIGNED AND SUBMITTED TO OSHPD FOR APPROVAL.

REVIEWED FOR CODE COMPLIANCE HCAI OPM-0043 BY: William Staehlin DATE: 01/23/2023 CALIFORNIA BUILDING CODE

MASON WEST
1601 E. Miraloma Ave. Placentia, CA 92870
TEL (714) 630 - 0701, www.masonwest.com

Jiefu "Jeff" Zhang, SE
California SE No. S5270

PAGE
D11.10

HANGER ROD DIAMETER = ½"

SUSPENDED EQUIPMENT SEISMIC SOLID BRACING SYSTEM 375 LB MAX VERTICAL LOAD PER HANGER

KIT OPTIONS
S12SE
S1220SE
SH412SE
SH420SE

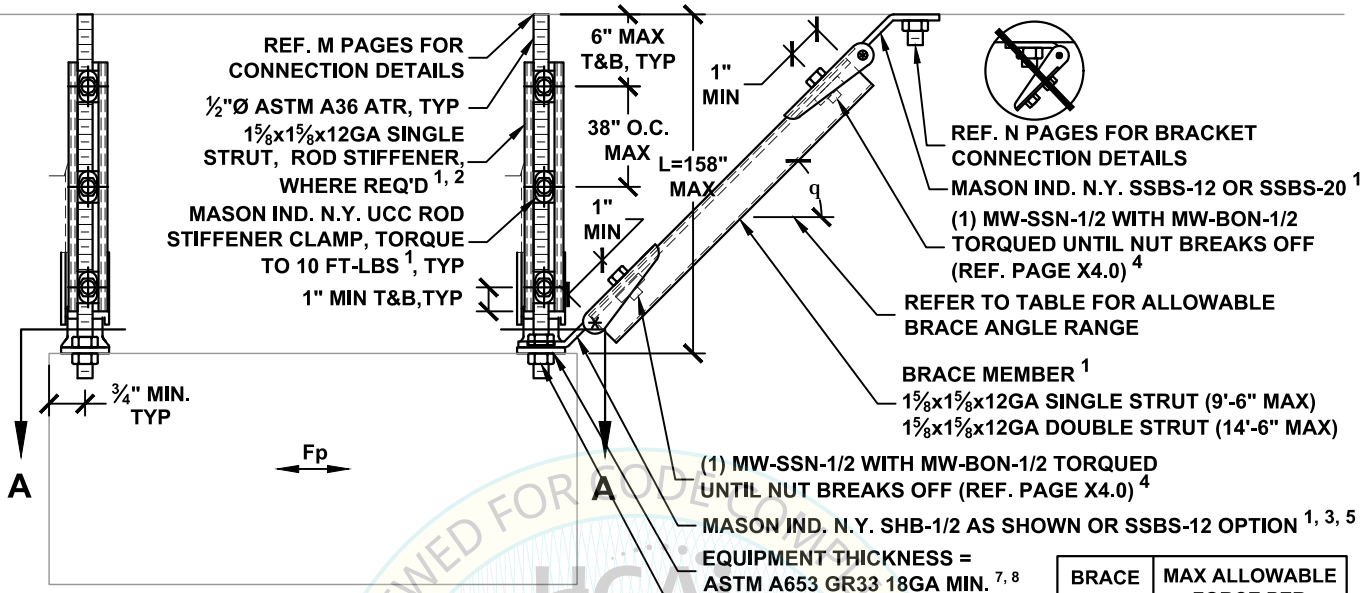

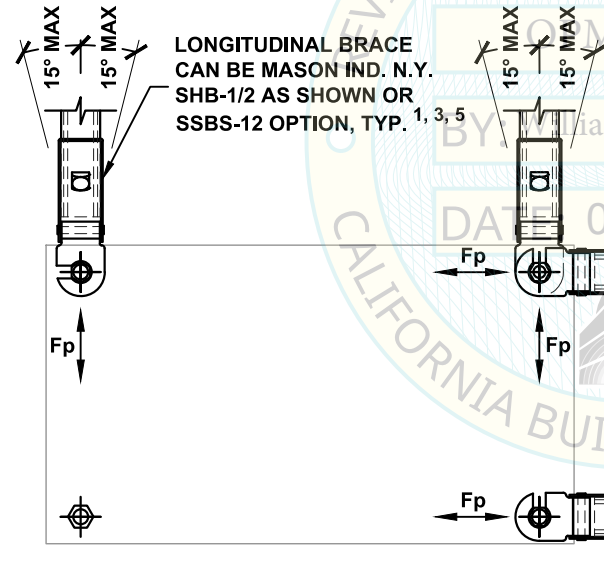

BRACE ANGLE RANGE q	MAX ALLOWABLE FORCE PER SEISMIC BRACE ASSEMBLY, Fp
30° - 45°	500 LBS
46° - 60°	290 LBS

NOTES:

1. REF. SECTION A1 FOR GENERAL NOTES.
2. PROVIDE ROD STIFFENERS ONLY WHERE SEISMIC BRACKETS ARE ATTACHED TO THE ROD AND ROD LENGTH (L) EXCEEDS 25". REF. APPROPRIATE M10 PAGES FOR DETAIL.
3. REF. PAGE A6.0 - A6.2 FOR ALTERNATE ARRANGEMENTS OF SEISMIC BRACES.
4. PROVIDE (1) 1/2" DIA. CONNECTION IN CENTER HOLE WHEN STRUT BRACE IS INSTALLED INSIDE THE BRACKET AND (2) 1/2" DIA. CONNECTIONS IN (2) OUTER HOLES WHEN THE BRACE IS INSTALLED OUTSIDE OF THE BRACKET. REF. X2.3 FOR CONNECTION DETAILS.
5. MW-KY-50 (REF. X2.4) MUST BE USED ON TOP OF BOTTOM SHB WHEN STACKING (2) SHB ON THE SAME ROD.
6. ADDITIONAL GRAVITY HANGERS MAY BE REQUIRED PER EQUIPMENT MANUFACTURER'S GUIDELINES.
7. ALTERNATE TO SHOWN HANGER/BRACE ATTACHMENT TO EQUIPMENT, HANGER RODS/BRACES MAY BE ATTACHED PER EQUIPMENT OSP OR TO EQUIPMENT MANU. CLIPS WITH ASTM A653 GR33 18GA MIN. THICKNESS & ¾" MIN. STEEL EDGE DISTANCE.
8. ATTACHMENT TO THE EQUIPMENT SHALL BE DESIGNED AND SUBMITTED TO OSHPD FOR APPROVAL.

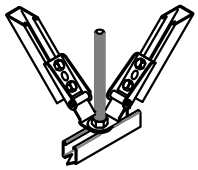

SSBS OPTION

VIEW A-A

REVIEWED FOR CODE COMPLIANCE HCAI OPM-0043 BY: William Staehlin DATE: 01/23/2023 CALIFORNIA BUILDING CODE

MASON WEST
1601 E. Miraloma Ave. Placentia, CA 92870
TEL (714) 630 - 0701, www.masonwest.com

Jiefu "Jeff" Zhang, SE
California SE No. S5270

HANGER ROD DIAMETER = 5/8"	SUSPENDED EQUIPMENT SEISMIC SOLID BRACING SYSTEM 750 LB MAX VERTICAL LOAD PER HANGER	KIT OPTIONS SH54SE SH5SE

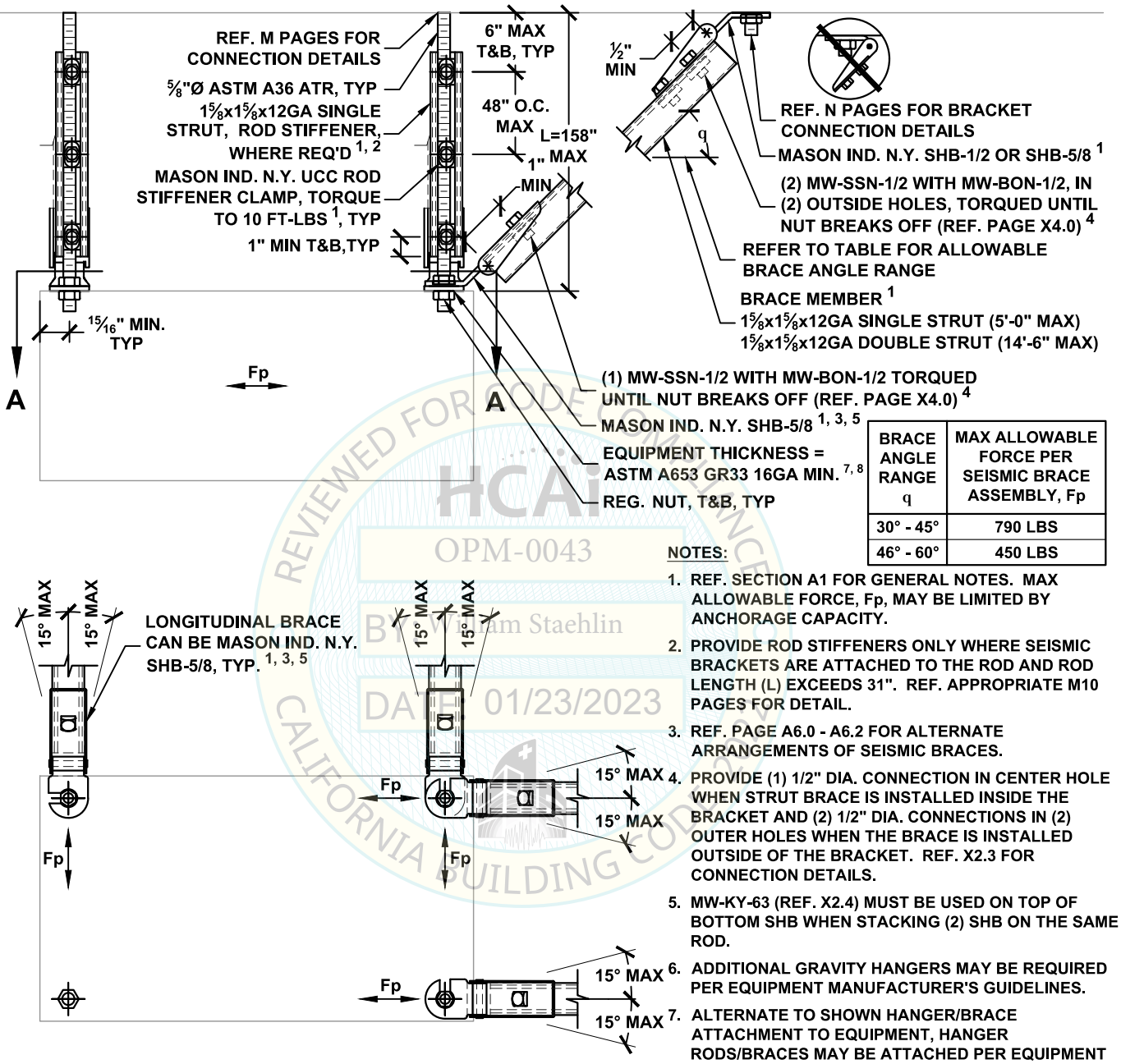

BRACE ANGLE RANGE q	MAX ALLOWABLE FORCE PER SEISMIC BRACE ASSEMBLY, Fp
30° - 45°	790 LBS
46° - 60°	450 LBS

VIEW A-A

NOTES:

1. REF. SECTION A1 FOR GENERAL NOTES. MAX ALLOWABLE FORCE, Fp, MAY BE LIMITED BY ANCHORAGE CAPACITY.
2. PROVIDE ROD STIFFENERS ONLY WHERE SEISMIC BRACKETS ARE ATTACHED TO THE ROD AND ROD LENGTH (L) EXCEEDS 31". REF. APPROPRIATE M10 PAGES FOR DETAIL.
3. REF. PAGE A6.0 - A6.2 FOR ALTERNATE ARRANGEMENTS OF SEISMIC BRACES.
4. PROVIDE (1) 1/2" DIA. CONNECTION IN CENTER HOLE WHEN STRUT BRACE IS INSTALLED INSIDE THE BRACKET AND (2) 1/2" DIA. CONNECTIONS IN (2) OUTER HOLES WHEN THE BRACE IS INSTALLED OUTSIDE OF THE BRACKET. REF. X2.3 FOR CONNECTION DETAILS.
5. MW-KY-63 (REF. X2.4) MUST BE USED ON TOP OF BOTTOM SHB WHEN STACKING (2) SHB ON THE SAME ROD.
6. ADDITIONAL GRAVITY HANGERS MAY BE REQUIRED PER EQUIPMENT MANUFACTURER'S GUIDELINES.
7. ALTERNATE TO SHOWN HANGER/BRACE ATTACHMENT TO EQUIPMENT, HANGER RODS/BRACES MAY BE ATTACHED PER EQUIPMENT OSP OR TO EQUIPMENT MANU. CLIPS WITH ASTM A653 GR33 16GA MIN. THICKNESS & 15/16" MIN. STEEL EDGE DISTANCE.
8. ATTACHMENT TO THE EQUIPMENT SHALL BE DESIGNED AND SUBMITTED TO OSHPD FOR APPROVAL.

REVIEWED FOR CODE COMPLIANCE
HCAi
OPM-0043
By: William Staehlin
DATE: 01/23/2023
CALIFORNIA BUILDING CODE

MASON WEST
1601 E. Miraloma Ave. Placentia, CA 92870
TEL (714) 630 - 0701, www.masonwest.com

Jiefu "Jeff" Zhang, SE
California SE No. S5270

PAGE
D11.12

HANGER ROD DIAMETER = ¾"	SUSPENDED EQUIPMENT SEISMIC SOLID BRACING SYSTEM 1250 LB MAX VERTICAL LOAD PER HANGER	KIT OPTIONS SH64SE SH65SE SH6SE

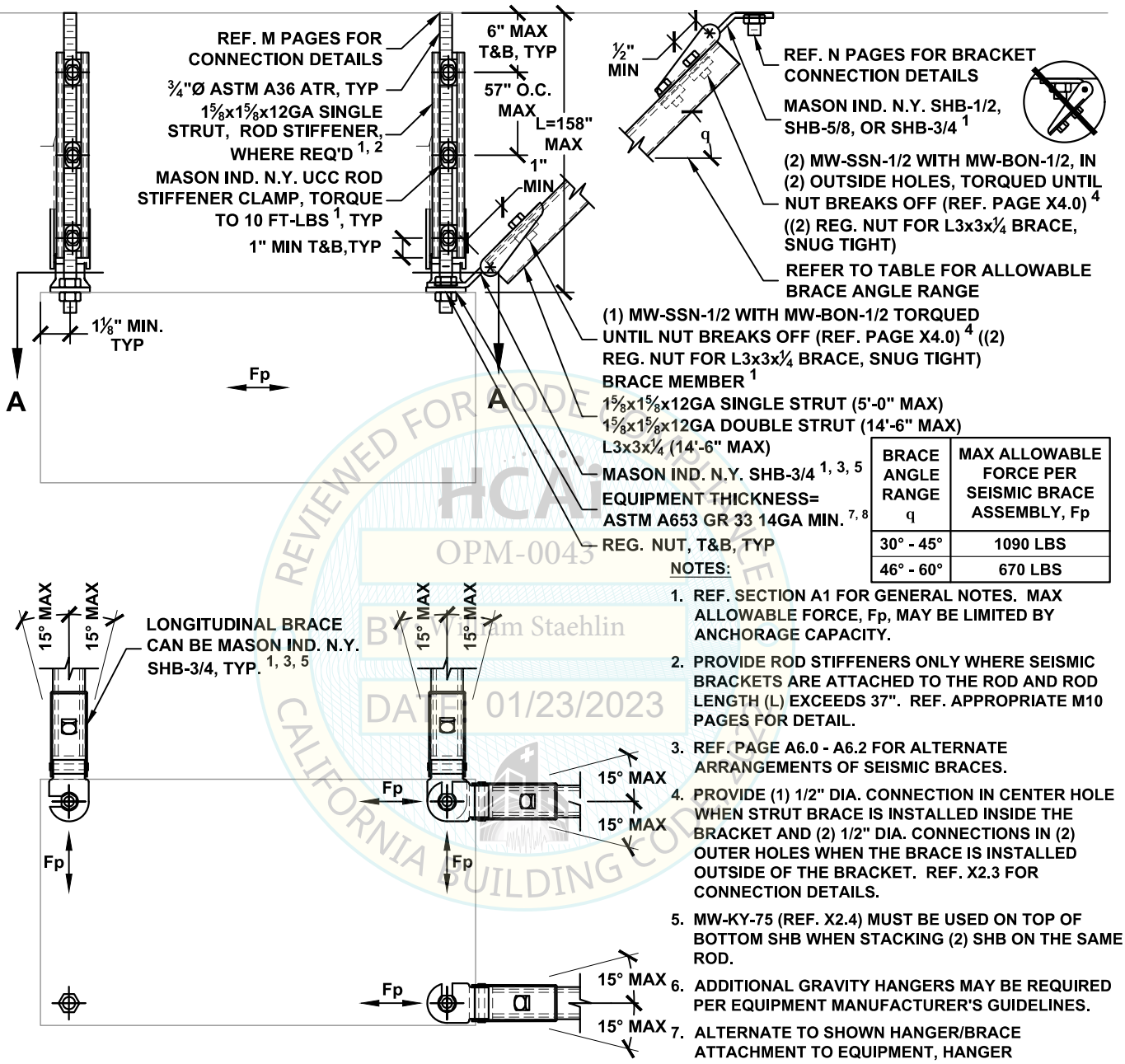

BRACE ANGLE RANGE q	MAX ALLOWABLE FORCE PER SEISMIC BRACE ASSEMBLY, Fp
30° - 45°	1090 LBS
46° - 60°	670 LBS

VIEW A-A

NOTES:

1. REF. SECTION A1 FOR GENERAL NOTES. MAX ALLOWABLE FORCE, Fp, MAY BE LIMITED BY ANCHORAGE CAPACITY.
2. PROVIDE ROD STIFFENERS ONLY WHERE SEISMIC BRACKETS ARE ATTACHED TO THE ROD AND ROD LENGTH (L) EXCEEDS 37". REF. APPROPRIATE M10 PAGES FOR DETAIL.
3. REF. PAGE A6.0 - A6.2 FOR ALTERNATE ARRANGEMENTS OF SEISMIC BRACES.
4. PROVIDE (1) 1/2" DIA. CONNECTION IN CENTER HOLE WHEN STRUT BRACE IS INSTALLED INSIDE THE BRACKET AND (2) 1/2" DIA. CONNECTIONS IN (2) OUTER HOLES WHEN THE BRACE IS INSTALLED OUTSIDE OF THE BRACKET. REF. X2.3 FOR CONNECTION DETAILS.
5. MW-KY-75 (REF. X2.4) MUST BE USED ON TOP OF BOTTOM SHB WHEN STACKING (2) SHB ON THE SAME ROD.
6. ADDITIONAL GRAVITY HANGERS MAY BE REQUIRED PER EQUIPMENT MANUFACTURER'S GUIDELINES.
7. ALTERNATE TO SHOWN HANGER/BRACE ATTACHMENT TO EQUIPMENT, HANGER RODS/BRACES MAY BE ATTACHED PER EQUIPMENT OSP OR TO EQUIPMENT MANU. CLIPS WITH ASTM A653 GR33 14GA MIN. THICKNESS & 1⅛" MIN. STEEL EDGE DISTANCE.
8. ATTACHMENT TO THE EQUIPMENT SHALL BE DESIGNED AND SUBMITTED TO OSHPD FOR APPROVAL.

REVIEWED FOR CODE COMPLIANCE
HCAI
OPM-0043
BY William Staehlin
DATE 01/23/2023
CALIFORNIA BUILDING CODE

MASON WEST
1601 E. Miraloma Ave. Placentia, CA 92870
TEL (714) 630 - 0701, www.masonwest.com

Jiefu "Jeff" Zhang, SE
California SE No. S5270

PAGE
D11.13

HANGER ROD DIAMETER = 3/8"	SUSPENDED EQUIPMENT SEISMIC CABLE BRACING SYSTEM 185 LB MAX VERTICAL LOAD PER HANGER	KIT OPTIONS C0SE

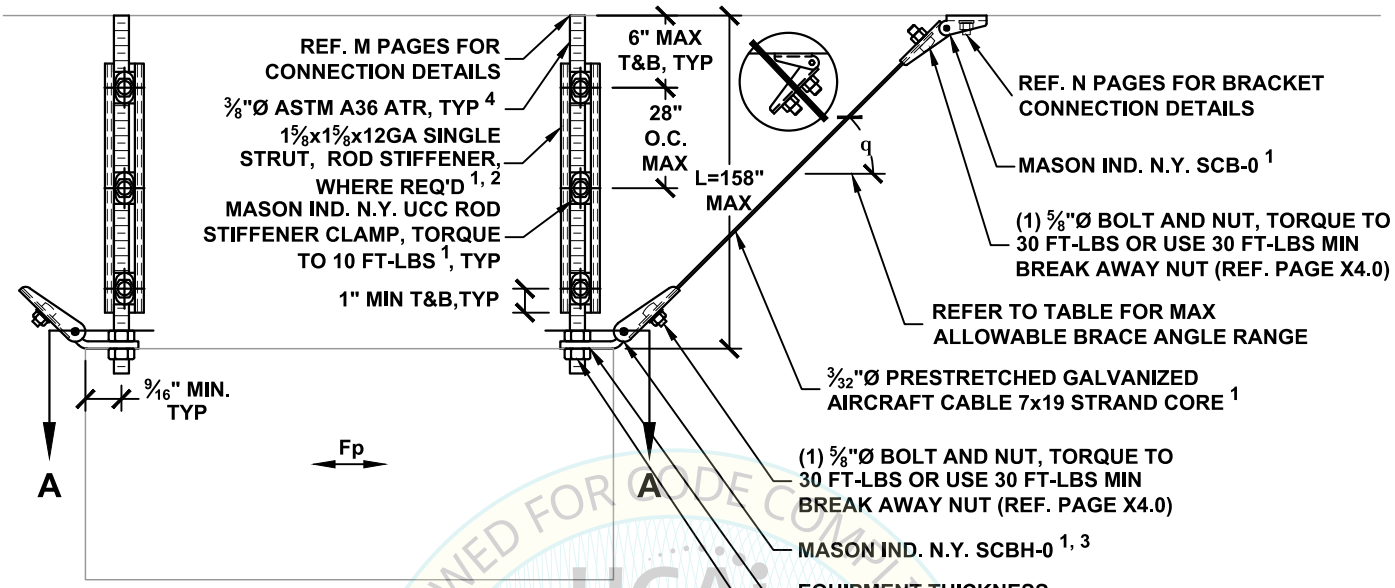

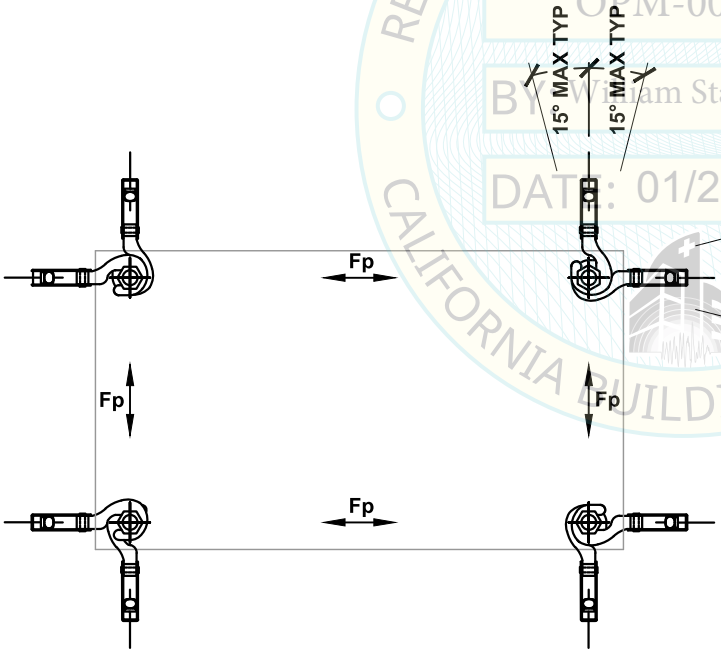

VIEW A-A

BRACE ANGLE RANGE q	MAX ALLOWABLE FORCE PER SEISMIC BRACE ASSEMBLY, Fp
30° - 45°	270 LBS
46° - 60°	170 LBS

NOTES:

1. REF. SECTION A1 FOR GENERAL NOTES.
2. PROVIDE ROD STIFFENERS ONLY WHERE SEISMIC BRACKETS ARE ATTACHED TO THE ROD AND ROD LENGTH (L) EXCEEDS 18". REF. APPROPRIATE M10 PAGES FOR DETAIL.
3. REF. PAGE A6.0 - A6.2 FOR ALTERNATE ARRANGEMENTS OF SEISMIC BRACES.
4. ADDITIONAL GRAVITY HANGERS MAY BE REQUIRED PER EQUIPMENT MANUFACTURER'S GUIDELINES.
5. ALTERNATE TO SHOWN HANGER/BRACE ATTACHMENT TO EQUIPMENT, HANGER RODS/BRACES MAY BE ATTACHED TO EQUIPMENT MANU. CLIPS WITH ASTM A653 GR 33 20GA MIN. THICKNESS & 9/16" MIN. STEEL EDGE DISTANCE.
6. ATTACHMENT TO THE EQUIPMENT SHALL BE DESIGNED AND SUBMITTED TO OSHPD FOR APPROVAL.

REVIEWED FOR CODE COMPLIANCE
HCAI
OPM-0043
BY: William Staehlin
DATE: 01/23/2023
CALIFORNIA BUILDING CODE 2022

MASON WEST
1601 E. Miraloma Ave. Placentia, CA 92870
TEL (714) 630 - 0701, www.masonwest.com

Jiefu "Jeff" Zhang, SE
California SE No. S5270

PAGE
D12.10

HANGER ROD DIAMETER = ½"	SUSPENDED EQUIPMENT SEISMIC CABLE BRACING SYSTEM 375 LB MAX VERTICAL LOAD PER HANGER	KIT OPTIONS **C1SE**

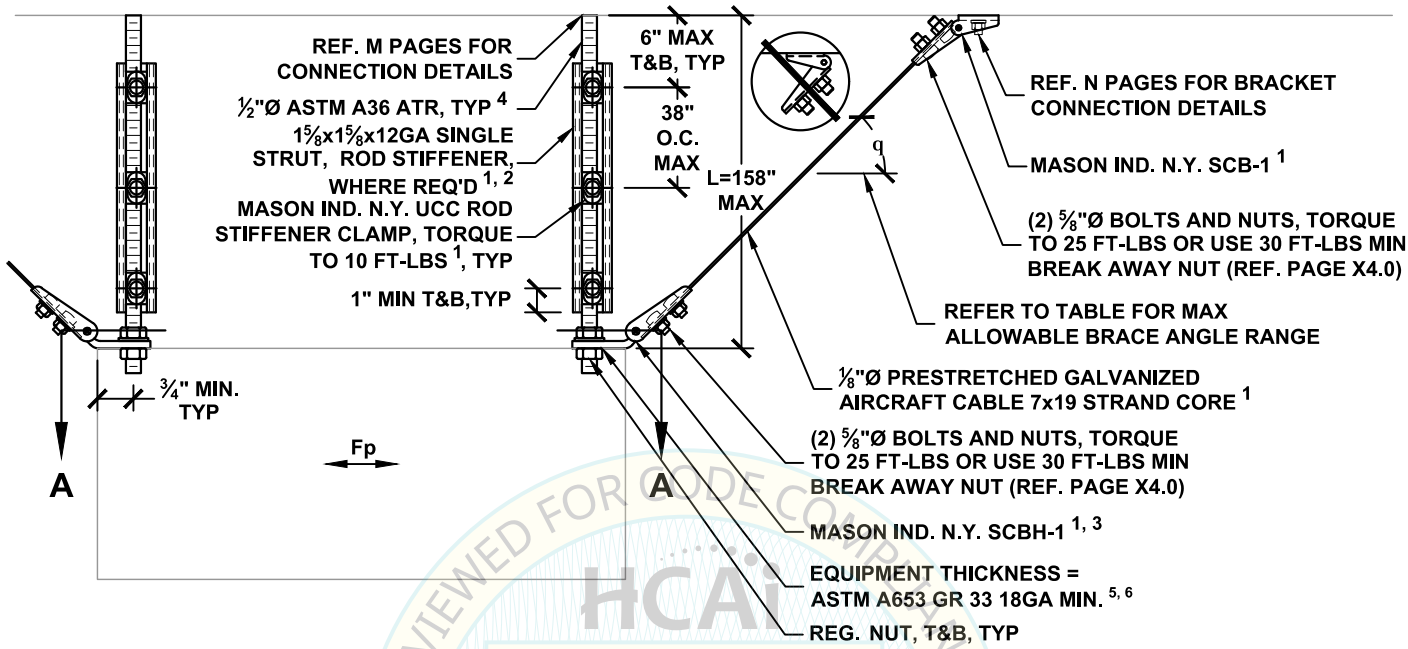

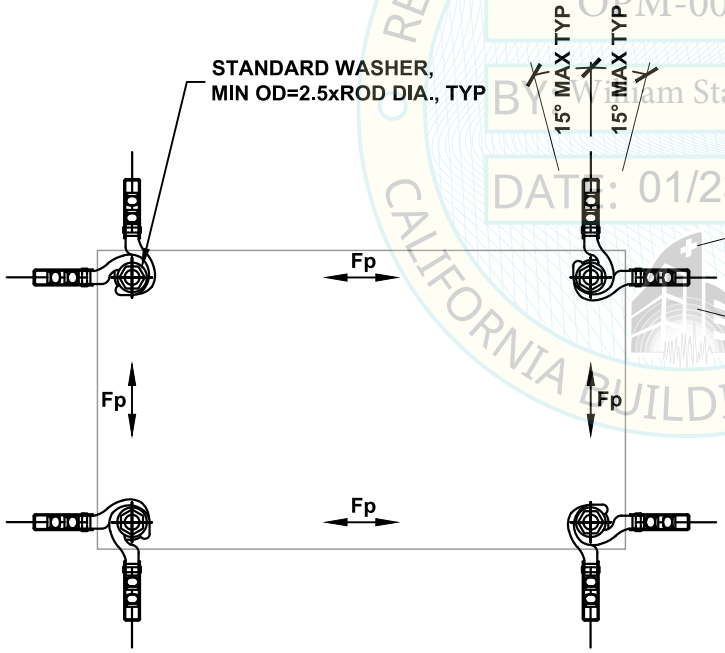

VIEW A-A

BRACE ANGLE RANGE q	MAX ALLOWABLE FORCE PER SEISMIC BRACE ASSEMBLY, Fp
30° - 45°	500 LBS
46° - 60°	290 LBS

HCAi
OPM-0043
By: William Staehlin
DATE: 01/23/2023
REVIEWED FOR CODE COMPLIANCE
CALIFORNIA BUILDING CODE 2022

NOTES:

1. REF. SECTION A1 FOR GENERAL NOTES.
2. PROVIDE ROD STIFFENERS ONLY WHERE SEISMIC BRACKETS ARE ATTACHED TO THE ROD AND ROD LENGTH (L) EXCEEDS 25". REF. APPROPRIATE M10 PAGES FOR DETAIL.
3. REF. PAGE A6.0 - A6.2 FOR ALTERNATE ARRANGEMENTS OF SEISMIC BRACES.
4. ADDITIONAL GRAVITY HANGERS MAY BE REQUIRED PER EQUIPMENT MANUFACTURER'S GUIDELINES.
5. ALTERNATE TO SHOWN HANGER/BRACE ATTACHMENT TO EQUIPMENT, HANGER RODS/BRACES MAY BE ATTACHED PER EQUIPMENT OSP OR TO EQUIPMENT MANU. CLIPS WITH ASTM A653 GR 33 18GA MIN. THICKNESS & ¾" MIN. STEEL EDGE DISTANCE.
6. ATTACHMENT TO THE EQUIPMENT SHALL BE DESIGNED AND SUBMITTED TO OSHPD FOR APPROVAL.

MASON WEST
1601 E. Miraloma Ave. Placentia, CA 92870
TEL (714) 630 - 0701, www.masonwest.com

Jiefu "Jeff" Zhang, SE
California SE No. S5270

PAGE
D12.11

HANGER ROD DIAMETER = 5/8"	SUSPENDED EQUIPMENT SEISMIC CABLE BRACING SYSTEM 750 LB MAX VERTICAL LOAD PER HANGER	KIT OPTIONS C1SE

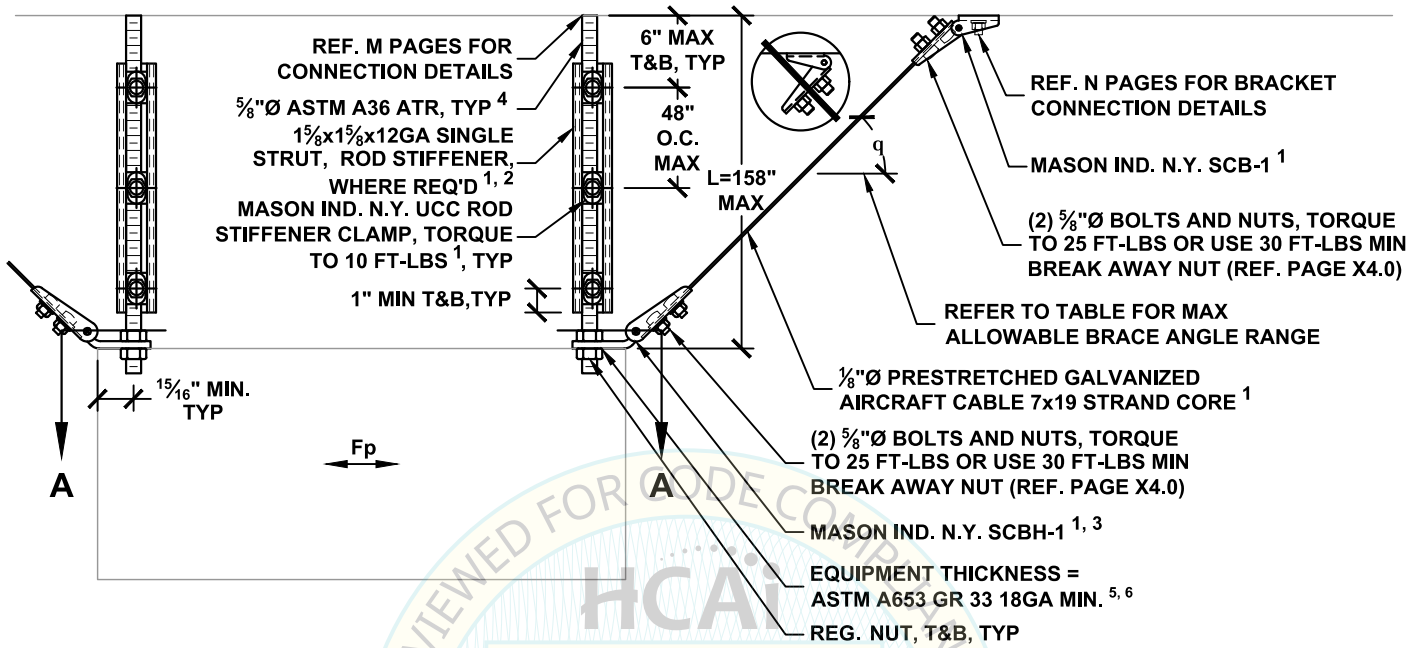

REVIEWED FOR CODE COMPLIANCE
HCAi
OPM-0043
By: William Staehlin
DATE: 01/23/2023
CALIFORNIA BUILDING CODE 2022

BRACE ANGLE RANGE q	MAX ALLOWABLE FORCE PER SEISMIC BRACE ASSEMBLY, Fp
30° - 45°	540 LBS
46° - 60°	380 LBS

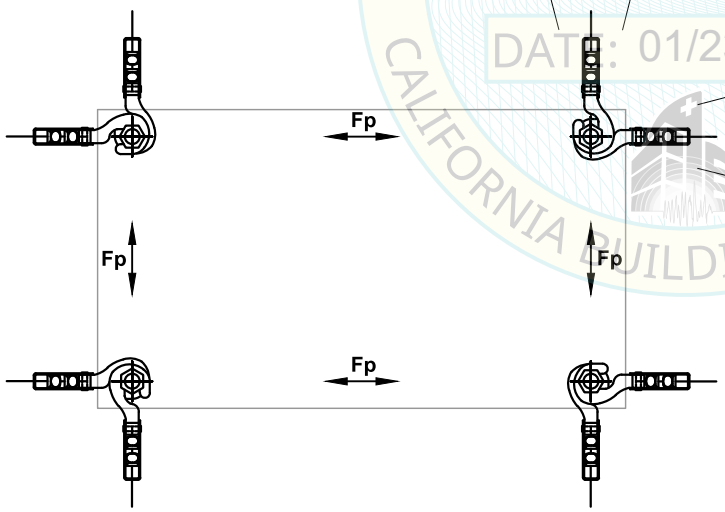

VIEW A-A

NOTES:

1. REF. SECTION A1 FOR GENERAL NOTES.
2. PROVIDE ROD STIFFENERS ONLY WHERE SEISMIC BRACKETS ARE ATTACHED TO THE ROD AND ROD LENGTH (L) EXCEEDS 31". REF. APPROPRIATE M10 PAGES FOR DETAIL.
3. REF. PAGE A6.0 - A6.2 FOR ALTERNATE ARRANGEMENTS OF SEISMIC BRACES.
4. ADDITIONAL GRAVITY HANGERS MAY BE REQUIRED PER EQUIPMENT MANUFACTURER'S GUIDELINES.
5. ALTERNATE TO SHOWN HANGER/BRACE ATTACHMENT TO EQUIPMENT, HANGER RODS/BRACES MAY BE ATTACHED PER EQUIPMENT OSP OR TO EQUIPMENT MANU. CLIPS WITH ASTM A653 GR 33 18GA MIN. THICKNESS & 15/16" MIN. STEEL EDGE DISTANCE.
6. ATTACHMENT TO THE EQUIPMENT SHALL BE DESIGNED AND SUBMITTED TO OSHPD FOR APPROVAL.

MASON WEST
1601 E. Miraloma Ave. Placentia, CA 92870
TEL (714) 630 - 0701, www.masonwest.com

Jiefu "Jeff" Zhang, SE
California SE No. S5270

PAGE
D12.12

HANGER ROD DIAMETER = ¾"	SUSPENDED EQUIPMENT SEISMIC CABLE BRACING SYSTEM 1250 LB MAX VERTICAL LOAD PER HANGER	KIT OPTIONS **C2SE**

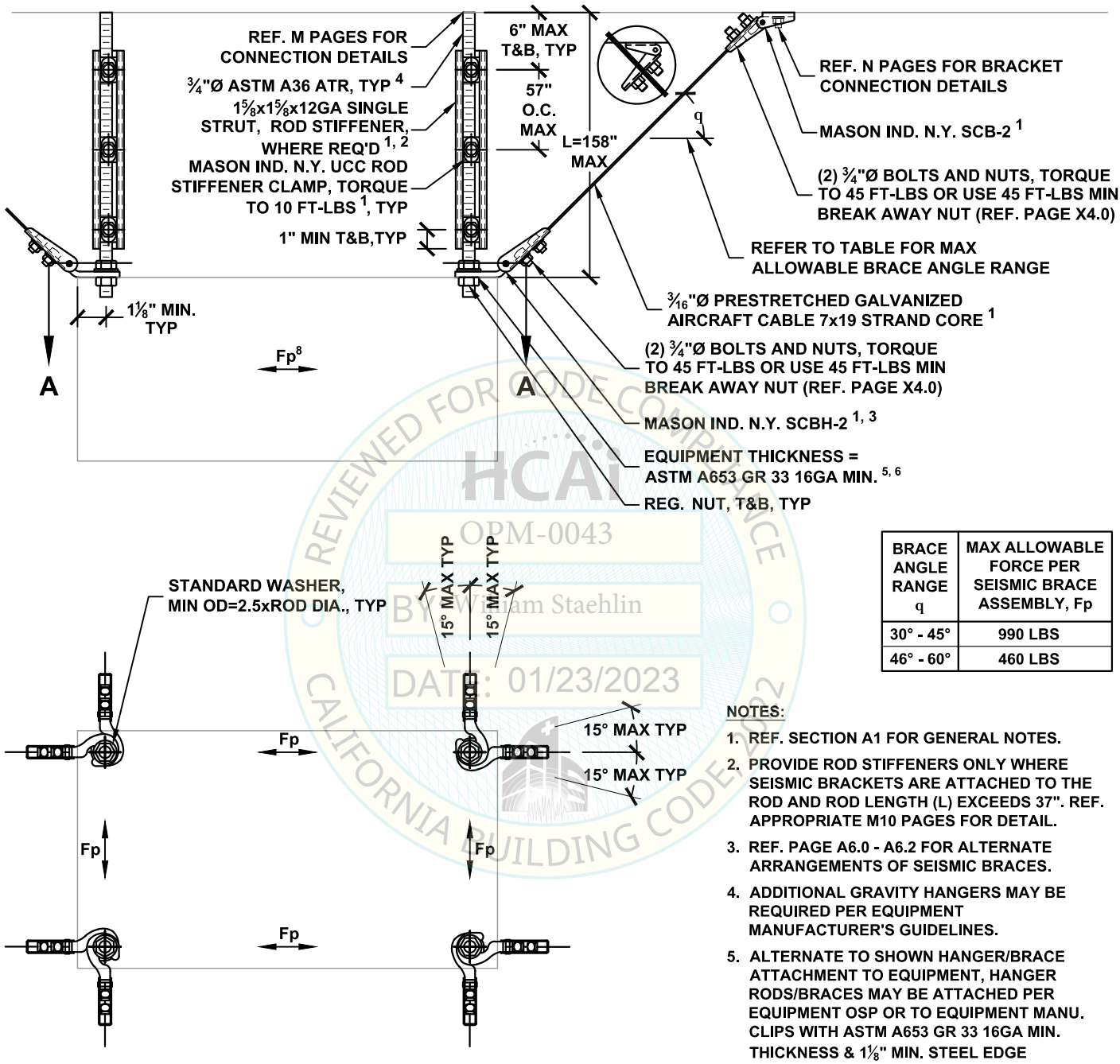

BRACE ANGLE RANGE q	MAX ALLOWABLE FORCE PER SEISMIC BRACE ASSEMBLY, Fp
30° - 45°	990 LBS
46° - 60°	460 LBS

VIEW A-A

NOTES:

1. REF. SECTION A1 FOR GENERAL NOTES.
2. PROVIDE ROD STIFFENERS ONLY WHERE SEISMIC BRACKETS ARE ATTACHED TO THE ROD AND ROD LENGTH (L) EXCEEDS 37". REF. APPROPRIATE M10 PAGES FOR DETAIL.
3. REF. PAGE A6.0 - A6.2 FOR ALTERNATE ARRANGEMENTS OF SEISMIC BRACES.
4. ADDITIONAL GRAVITY HANGERS MAY BE REQUIRED PER EQUIPMENT MANUFACTURER'S GUIDELINES.
5. ALTERNATE TO SHOWN HANGER/BRACE ATTACHMENT TO EQUIPMENT, HANGER RODS/BRACES MAY BE ATTACHED PER EQUIPMENT OSP OR TO EQUIPMENT MANU. CLIPS WITH ASTM A653 GR 33 16GA MIN. THICKNESS & 1⅛" MIN. STEEL EDGE DISTANCE.
6. ATTACHMENT TO THE EQUIPMENT SHALL BE DESIGNED AND SUBMITTED TO OSHPD FOR APPROVAL.

REVIEWED FOR CODE COMPLIANCE
HCAi
OPM-0043
By: William Staehlin
DATE: 01/23/2023
CALIFORNIA BUILDING CODE 2022

MASON WEST
1601 E. Miraloma Ave. Placentia, CA 92870
TEL (714) 630 - 0701, www.masonwest.com

Jiefu "Jeff" Zhang, SE
California SE No. S5270

PAGE
D12.13

HANGER ROD DIAMETER = 3/8"	SUSPENDED EQUIPMENT SEISMIC CABLE BRACING SYSTEM 185 LB MAX VERTICAL LOAD PER HANGER	KIT OPTIONS C0X

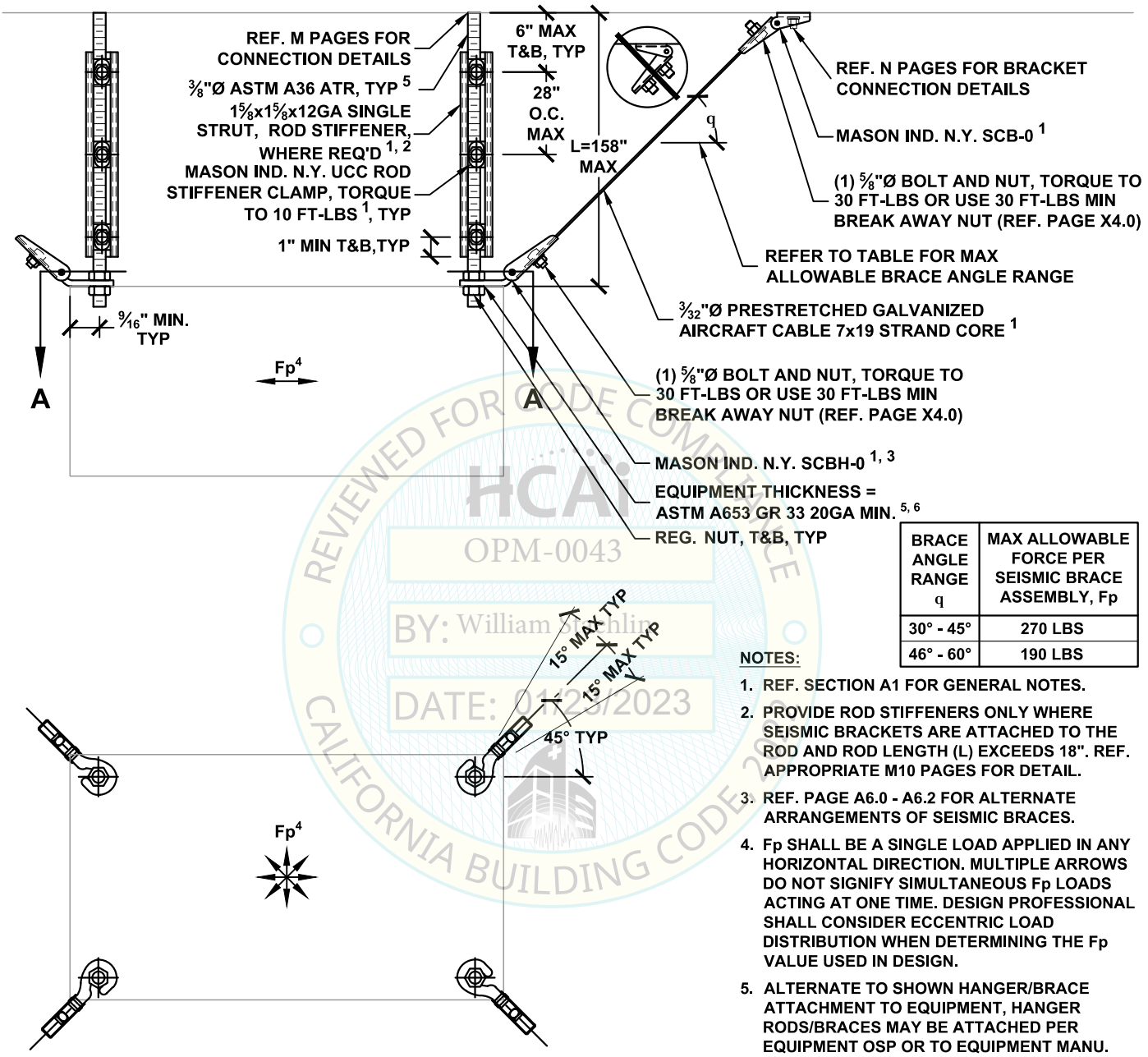

VIEW A-A

BRACE ANGLE RANGE q	MAX ALLOWABLE FORCE PER SEISMIC BRACE ASSEMBLY, Fp
30° - 45°	270 LBS
46° - 60°	190 LBS

NOTES:

1. REF. SECTION A1 FOR GENERAL NOTES.
2. PROVIDE ROD STIFFENERS ONLY WHERE SEISMIC BRACKETS ARE ATTACHED TO THE ROD AND ROD LENGTH (L) EXCEEDS 18". REF. APPROPRIATE M10 PAGES FOR DETAIL.
3. REF. PAGE A6.0 - A6.2 FOR ALTERNATE ARRANGEMENTS OF SEISMIC BRACES.
4. Fp SHALL BE A SINGLE LOAD APPLIED IN ANY HORIZONTAL DIRECTION. MULTIPLE ARROWS DO NOT SIGNIFY SIMULTANEOUS Fp LOADS ACTING AT ONE TIME. DESIGN PROFESSIONAL SHALL CONSIDER ECCENTRIC LOAD DISTRIBUTION WHEN DETERMINING THE Fp VALUE USED IN DESIGN.
5. ALTERNATE TO SHOWN HANGER/BRACE ATTACHMENT TO EQUIPMENT, HANGER RODS/BRACES MAY BE ATTACHED PER EQUIPMENT OSP OR TO EQUIPMENT MANU. CLIPS WITH ASTM A653 GR 33 20GA MIN. THICKNESS & 9/16" MIN. STEEL EDGE DISTANCE.
6. ATTACHMENT TO THE EQUIPMENT SHALL BE DESIGNED AND SUBMITTED TO OSHPD FOR APPROVAL.

REVIEWED FOR CODE COMPLIANCE
HCAi
OPM-0043
BY: William Staehlin
DATE: 01/23/2023
CALIFORNIA BUILDING CODE 2022

MASON WEST
1601 E. Miraloma Ave. Placentia, CA 92870
TEL (714) 630 - 0701, www.masonwest.com

Jiefu "Jeff" Zhang, SE
California SE No. S5270

PAGE
D13.10

HANGER ROD DIAMETER = ½"	SUSPENDED EQUIPMENT SEISMIC CABLE BRACING SYSTEM 375 LB MAX VERTICAL LOAD PER HANGER	KIT OPTIONS C1X

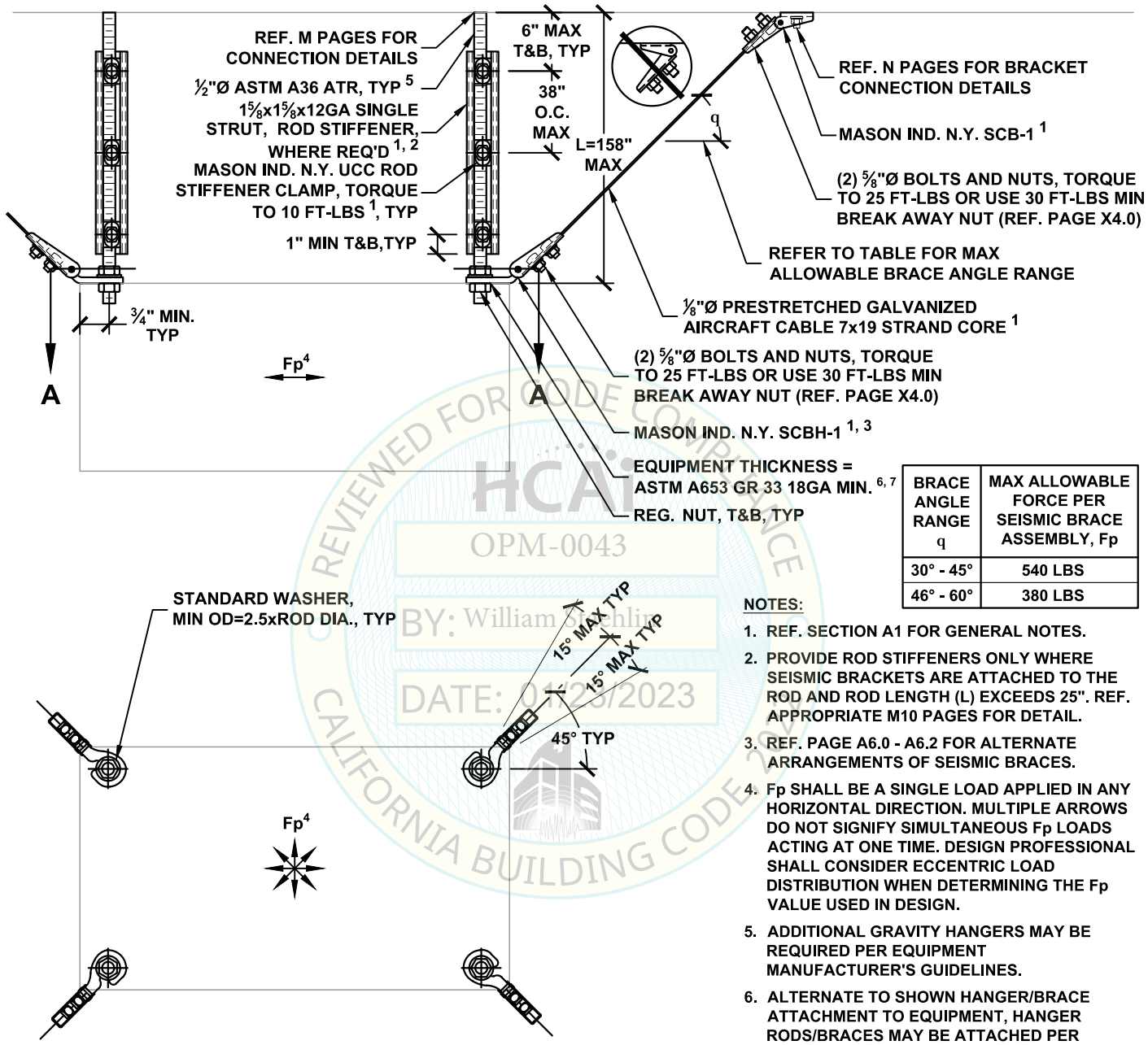

BRACE ANGLE RANGE q	MAX ALLOWABLE FORCE PER SEISMIC BRACE ASSEMBLY, Fp
30° - 45°	540 LBS
46° - 60°	380 LBS

VIEW A-A

NOTES:

1. REF. SECTION A1 FOR GENERAL NOTES.
2. PROVIDE ROD STIFFENERS ONLY WHERE SEISMIC BRACKETS ARE ATTACHED TO THE ROD AND ROD LENGTH (L) EXCEEDS 25". REF. APPROPRIATE M10 PAGES FOR DETAIL.
3. REF. PAGE A6.0 - A6.2 FOR ALTERNATE ARRANGEMENTS OF SEISMIC BRACES.
4. Fp SHALL BE A SINGLE LOAD APPLIED IN ANY HORIZONTAL DIRECTION. MULTIPLE ARROWS DO NOT SIGNIFY SIMULTANEOUS Fp LOADS ACTING AT ONE TIME. DESIGN PROFESSIONAL SHALL CONSIDER ECCENTRIC LOAD DISTRIBUTION WHEN DETERMINING THE Fp VALUE USED IN DESIGN.
5. ADDITIONAL GRAVITY HANGERS MAY BE REQUIRED PER EQUIPMENT MANUFACTURER'S GUIDELINES.
6. ALTERNATE TO SHOWN HANGER/BRACE ATTACHMENT TO EQUIPMENT, HANGER RODS/BRACES MAY BE ATTACHED PER EQUIPMENT OSP OR TO EQUIPMENT MANU. CLIPS WITH ASTM A653 GR 33 18GA MIN. THICKNESS & ¾" MIN. STEEL EDGE DISTANCE.
7. ATTACHMENT TO THE EQUIPMENT SHALL BE DESIGNED AND SUBMITTED TO OSHPD FOR APPROVAL.

REVIEWED FOR CODE COMPLIANCE
CALIFORNIA BUILDING CODE 2022
HCAI
OPM-0043
BY: William Staehlin
DATE: 01/23/2023

MASON WEST
1601 E. Miraloma Ave. Placentia, CA 92870
TEL (714) 630 - 0701, www.masonwest.com

Jiefu "Jeff" Zhang, SE
California SE No. S5270

PAGE
D13.11

HANGER ROD DIAMETER = 5/8"	SUSPENDED EQUIPMENT SEISMIC CABLE BRACING SYSTEM 750 LB MAX VERTICAL LOAD PER HANGER	KIT OPTIONS C1X

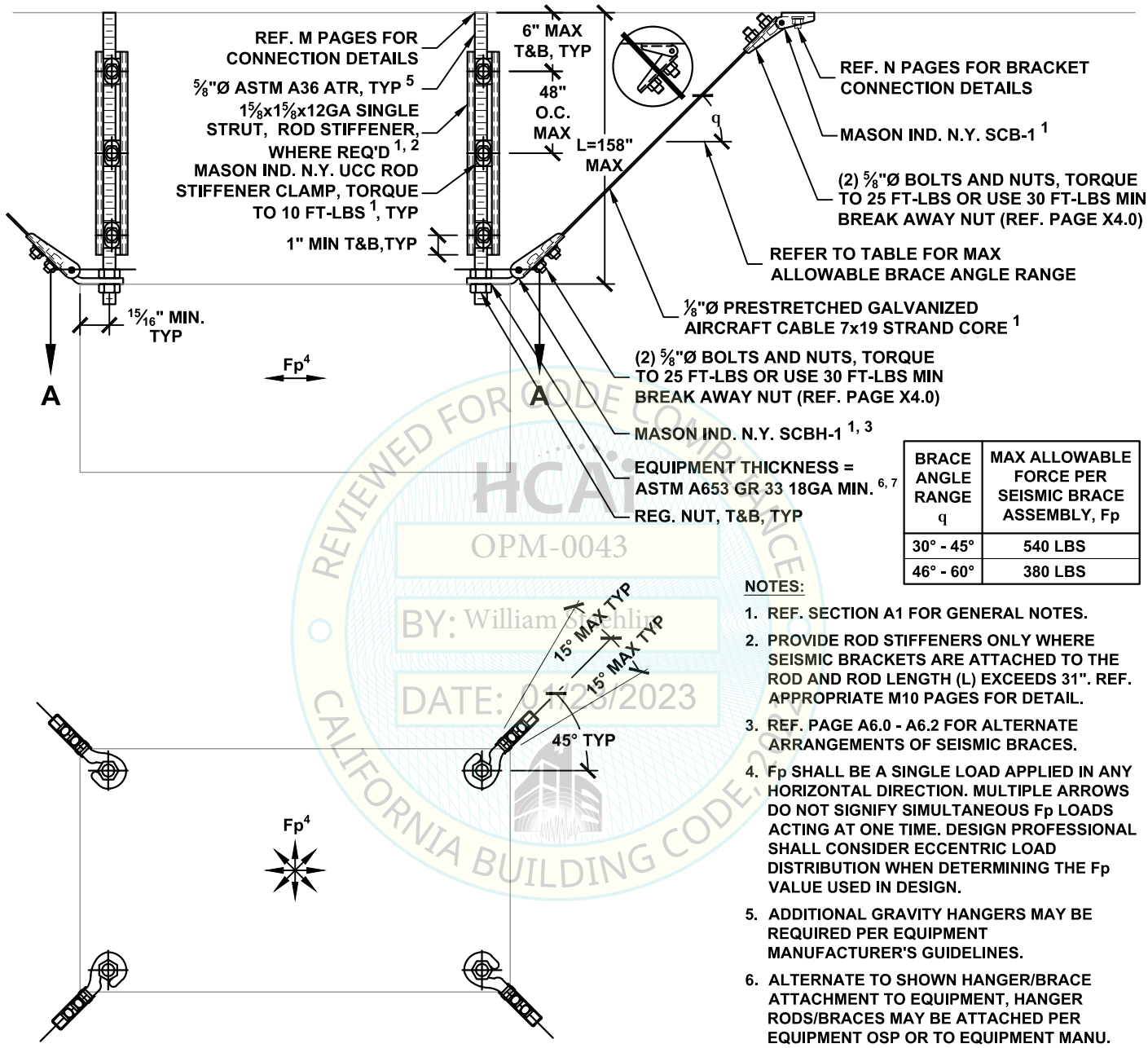

BRACE ANGLE RANGE q	MAX ALLOWABLE FORCE PER SEISMIC BRACE ASSEMBLY, Fp
30° - 45°	540 LBS
46° - 60°	380 LBS

VIEW A-A

NOTES:

1. REF. SECTION A1 FOR GENERAL NOTES.
2. PROVIDE ROD STIFFENERS ONLY WHERE SEISMIC BRACKETS ARE ATTACHED TO THE ROD AND ROD LENGTH (L) EXCEEDS 31". REF. APPROPRIATE M10 PAGES FOR DETAIL.
3. REF. PAGE A6.0 - A6.2 FOR ALTERNATE ARRANGEMENTS OF SEISMIC BRACES.
4. Fp SHALL BE A SINGLE LOAD APPLIED IN ANY HORIZONTAL DIRECTION. MULTIPLE ARROWS DO NOT SIGNIFY SIMULTANEOUS Fp LOADS ACTING AT ONE TIME. DESIGN PROFESSIONAL SHALL CONSIDER ECCENTRIC LOAD DISTRIBUTION WHEN DETERMINING THE Fp VALUE USED IN DESIGN.
5. ADDITIONAL GRAVITY HANGERS MAY BE REQUIRED PER EQUIPMENT MANUFACTURER'S GUIDELINES.
6. ALTERNATE TO SHOWN HANGER/BRACE ATTACHMENT TO EQUIPMENT, HANGER RODS/BRACES MAY BE ATTACHED PER EQUIPMENT OSP OR TO EQUIPMENT MANU. CLIPS WITH ASTM A653 GR 33 18GA MIN. THICKNESS & 15/16" MIN. STEEL EDGE DISTANCE.
7. ATTACHMENT TO THE EQUIPMENT SHALL BE DESIGNED AND SUBMITTED TO OSHPD FOR APPROVAL.

REVIEWED FOR CODE COMPLIANCE
HCAI
OPM-0043
BY: William Staehlin
DATE: 01/23/2023
CALIFORNIA BUILDING CODE, 2022

MASON WEST
1601 E. Miraloma Ave. Placentia, CA 92870
TEL (714) 630 - 0701, www.masonwest.com

Jiefu "Jeff" Zhang, SE
California SE No. S5270

PAGE
D13.12

HANGER ROD DIAMETER = ¾"	SUSPENDED EQUIPMENT SEISMIC CABLE BRACING SYSTEM 1250 LB MAX VERTICAL LOAD PER HANGER	KIT OPTIONS C2X

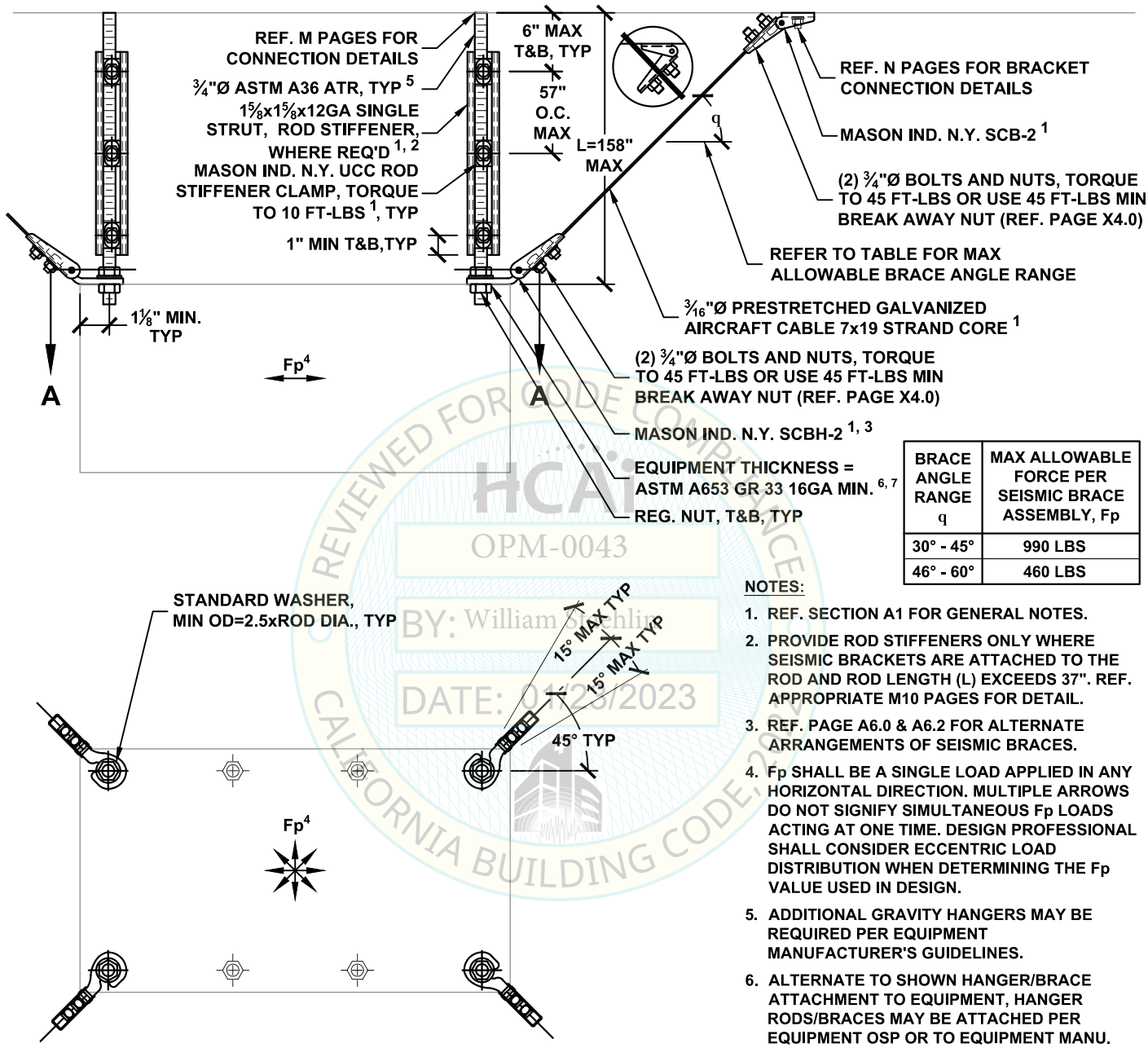

BRACE ANGLE RANGE q	MAX ALLOWABLE FORCE PER SEISMIC BRACE ASSEMBLY, Fp
30° - 45°	990 LBS
46° - 60°	460 LBS

VIEW A-A

NOTES:

1. REF. SECTION A1 FOR GENERAL NOTES.
2. PROVIDE ROD STIFFENERS ONLY WHERE SEISMIC BRACKETS ARE ATTACHED TO THE ROD AND ROD LENGTH (L) EXCEEDS 37". REF. APPROPRIATE M10 PAGES FOR DETAIL.
3. REF. PAGE A6.0 & A6.2 FOR ALTERNATE ARRANGEMENTS OF SEISMIC BRACES.
4. Fp SHALL BE A SINGLE LOAD APPLIED IN ANY HORIZONTAL DIRECTION. MULTIPLE ARROWS DO NOT SIGNIFY SIMULTANEOUS Fp LOADS ACTING AT ONE TIME. DESIGN PROFESSIONAL SHALL CONSIDER ECCENTRIC LOAD DISTRIBUTION WHEN DETERMINING THE Fp VALUE USED IN DESIGN.
5. ADDITIONAL GRAVITY HANGERS MAY BE REQUIRED PER EQUIPMENT MANUFACTURER'S GUIDELINES.
6. ALTERNATE TO SHOWN HANGER/BRACE ATTACHMENT TO EQUIPMENT, HANGER RODS/BRACES MAY BE ATTACHED PER EQUIPMENT OSP OR TO EQUIPMENT MANU. CLIPS WITH ASTM A653 GR 33 16GA MIN. THICKNESS & 1⅛" MIN. STEEL EDGE DISTANCE.
7. ATTACHMENT TO THE EQUIPMENT SHALL BE DESIGNED AND SUBMITTED TO OSHPD FOR APPROVAL.

REVIEWED FOR CODE COMPLIANCE
HCAI
OPM-0043
BY: William Staehlin
DATE: 01/23/2023
CALIFORNIA BUILDING CODE, 2022

MASON WEST
1601 E. Miraloma Ave. Placentia, CA 92870
TEL (714) 630 - 0701, www.masonwest.com

Jiefu "Jeff" Zhang, SE
California SE No. S5270

PAGE
D13.13

HANGER ROD DIAMETER = 3/8"	RECTANGULAR DUCT TRANSVERSE TRAPEZE SEISMIC SOLID BRACING SYSTEM 30 PLF MAX	

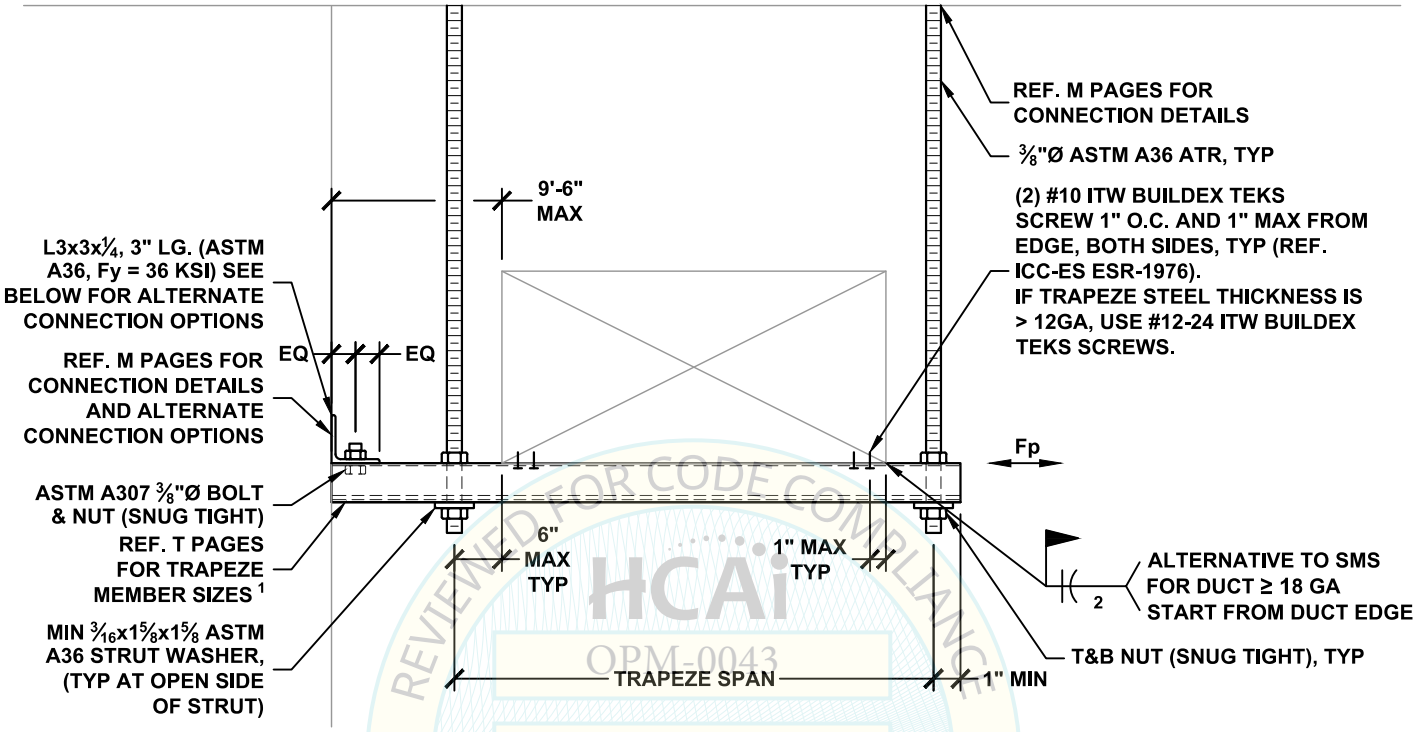

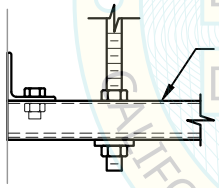

OPTION 1: SINGLE STRUT TRAPEZE

MAX ALLOWABLE FORCE PER SEISMIC BRACE ASSEMBLY, Fp [2]
670 LBS

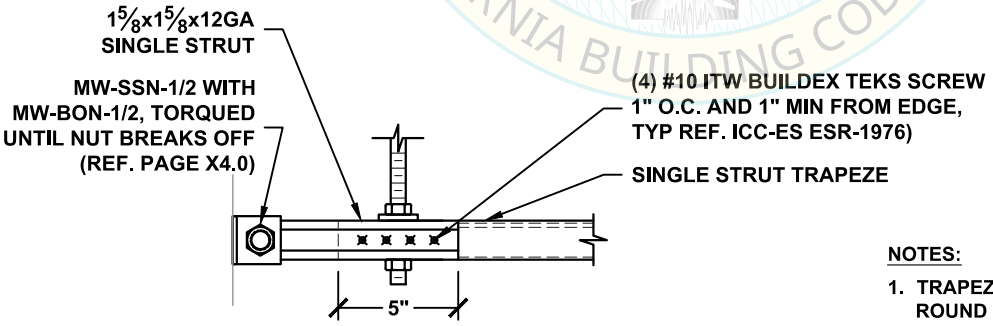

OPTION 2: SINGLE STRUT TRAPEZE

NOTES:

1. TRAPEZE MEMBER MAY BE PROVIDED WITH ROUND HOLES SIZED FOR HANGER RODS. REF. X7.0 & X7.1 FOR STRUT MEMBER DATA.
2. SEPARATE LONGITUDINAL BRACING SHALL BE PROVIDED FOR THE DUCT RUN AS DISCUSSED IN SECTION A1.

REVIEWED FOR CODE COMPLIANCE
HCAi
OPM-0043
BY: William Staehlin
DATE: 01/23/2023
CALIFORNIA BUILDING CODE, 2022

MASON WEST
1601 E. Miraloma Ave. Placentia, CA 92870
TEL (714) 630 - 0701, www.masonwest.com

Jiefu "Jeff" Zhang, SE
California SE No. S5270

HANGER ROD DIAMETER = 3/8"

RECTANGULAR DUCT ALL-DIRECTIONAL TRAPEZE SEISMIC SOLID BRACING SYSTEM 30 PLF MAX

KIT OPTIONS
TS12L
TS1220L
TSH312L
TSH320L

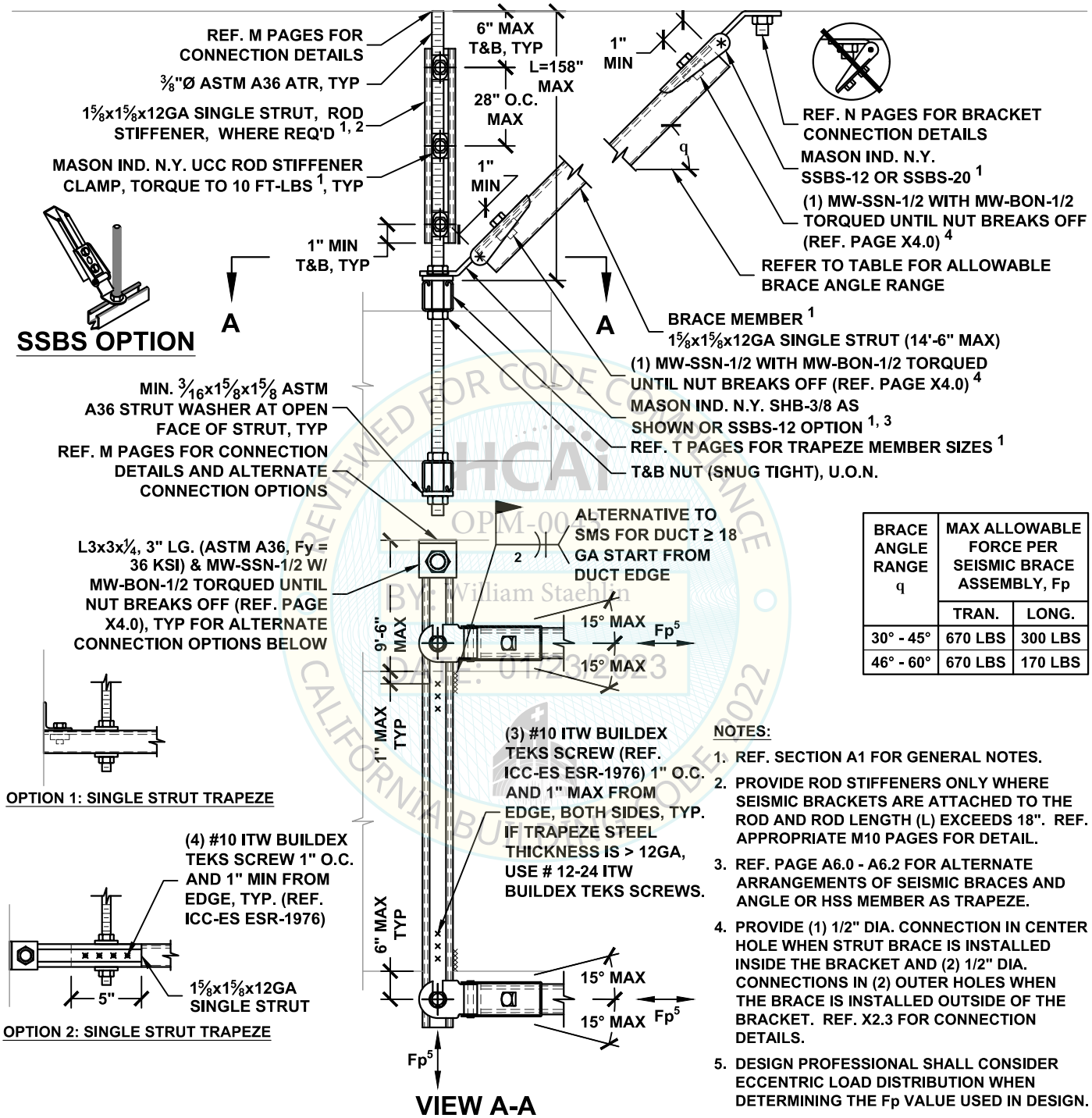

BRACE ANGLE RANGE q	MAX ALLOWABLE FORCE PER SEISMIC BRACE ASSEMBLY, Fp	
	TRAN.	LONG.
30° - 45°	670 LBS	300 LBS
46° - 60°	670 LBS	170 LBS

NOTES:

1. REF. SECTION A1 FOR GENERAL NOTES.
2. PROVIDE ROD STIFFENERS ONLY WHERE SEISMIC BRACKETS ARE ATTACHED TO THE ROD AND ROD LENGTH (L) EXCEEDS 18". REF. APPROPRIATE M10 PAGES FOR DETAIL.
3. REF. PAGE A6.0 - A6.2 FOR ALTERNATE ARRANGEMENTS OF SEISMIC BRACES AND ANGLE OR HSS MEMBER AS TRAPEZE.
4. PROVIDE (1) 1/2" DIA. CONNECTION IN CENTER HOLE WHEN STRUT BRACE IS INSTALLED INSIDE THE BRACKET AND (2) 1/2" DIA. CONNECTIONS IN (2) OUTER HOLES WHEN THE BRACE IS INSTALLED OUTSIDE OF THE BRACKET. REF. X2.3 FOR CONNECTION DETAILS.
5. DESIGN PROFESSIONAL SHALL CONSIDER ECCENTRIC LOAD DISTRIBUTION WHEN DETERMINING THE Fp VALUE USED IN DESIGN.

REVIEWED FOR CODE COMPLIANCE
OPM-0043
BY: William Staehlin
DATE: 01/23/2023
CALIFORNIA BUILDING CODE 2022

MASON WEST
1601 E. Miraloma Ave. Placentia, CA 92870
TEL (714) 630 - 0701, www.masonwest.com

Jiefu "Jeff" Zhang, SE
California SE No. S5270

PAGE
D14.12

HANGER ROD DIAMETER = ½"	RECTANGULAR DUCT TRANSVERSE TRAPEZE SEISMIC SOLID BRACING SYSTEM 60 PLF MAX	

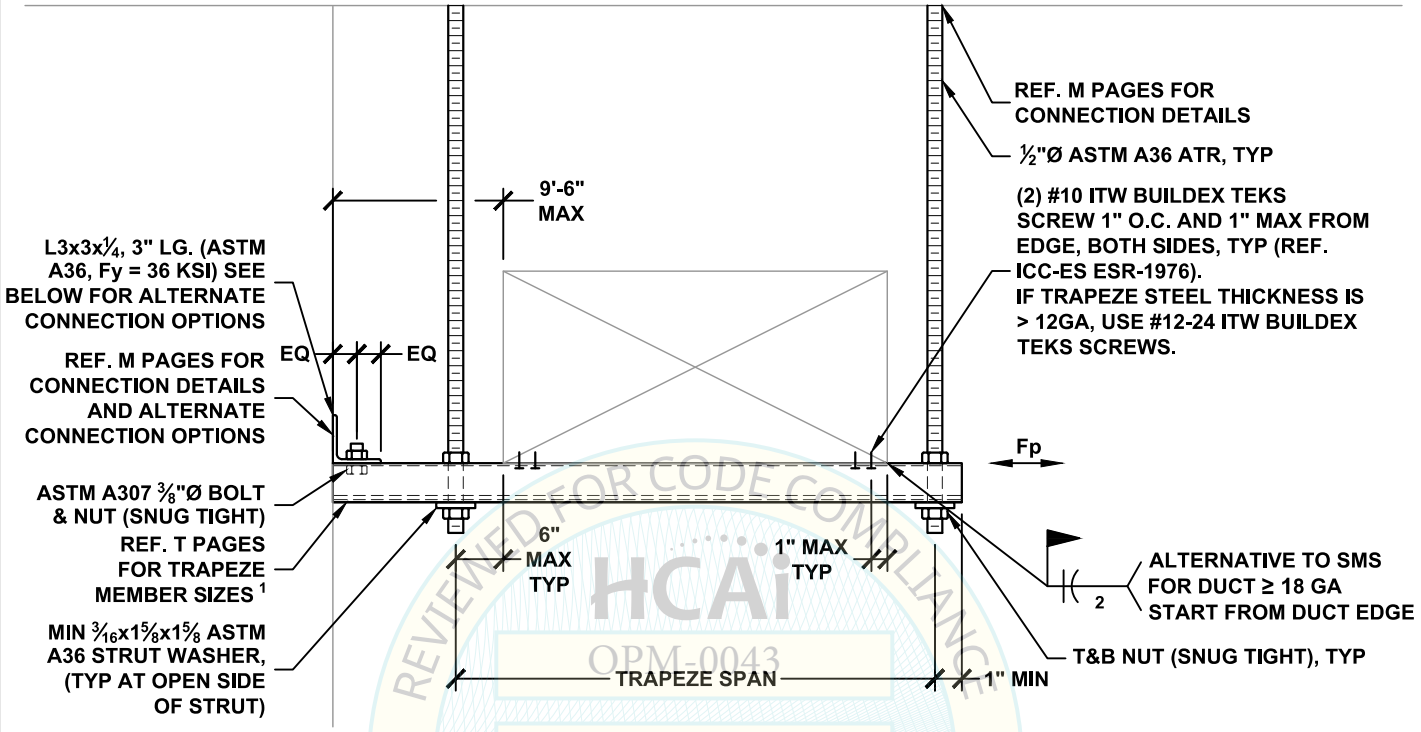

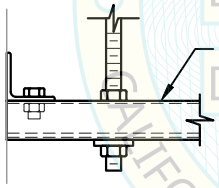

OPTION 1: SINGLE STRUT TRAPEZE

MAX ALLOWABLE FORCE PER SEISMIC BRACE ASSEMBLY, Fp [2]
670 LBS

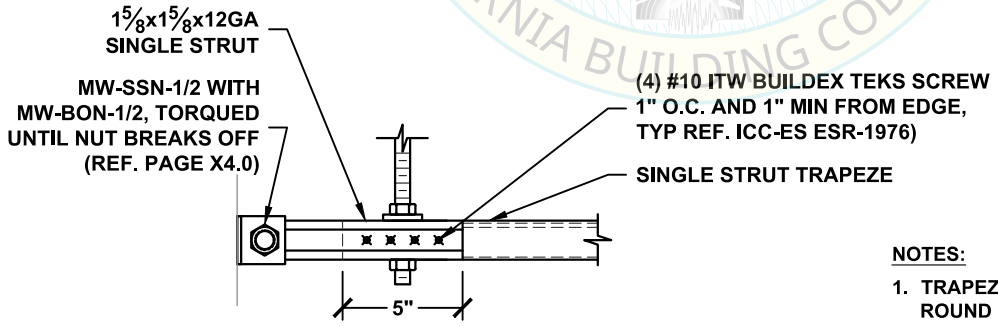

OPTION 2: SINGLE STRUT TRAPEZE

NOTES:

1. TRAPEZE MEMBER MAY BE PROVIDED WITH ROUND HOLES SIZED FOR HANGER RODS. REF. X7.0 & X7.1 FOR STRUT MEMBER DATA.
2. SEPARATE LONGITUDINAL BRACING SHALL BE PROVIDED FOR THE DUCT RUN AS DISCUSSED IN SECTION A1.

REVIEWED FOR CODE COMPLIANCE
HCAi
OPM-0043
BY: William Staehlin
DATE: 01/23/2023
CALIFORNIA BUILDING CODE, 2022

MASON WEST
1601 E. Miraloma Ave. Placentia, CA 92870
TEL (714) 630 - 0701, www.masonwest.com

Jiefu "Jeff" Zhang, SE
California SE No. S5270

PAGE
D14.20

HANGER ROD DIAMETER = ½"

RECTANGULAR DUCT ALL-DIRECTIONAL TRAPEZE SEISMIC SOLID BRACING SYSTEM 60 PLF MAX

KIT OPTIONS
TS12L
TS1220L
TSH412L
TSH420L

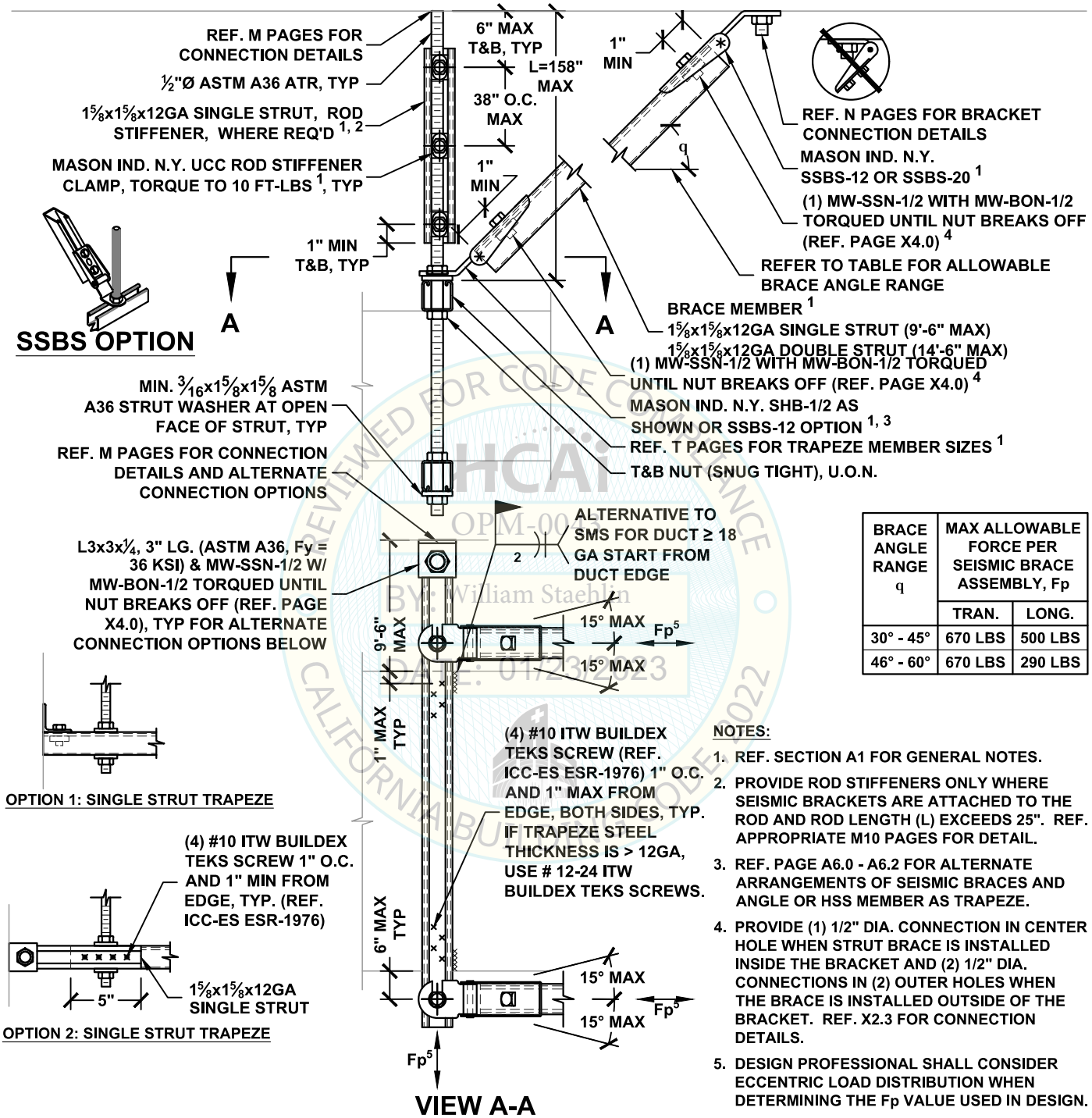

BRACE ANGLE RANGE q	MAX ALLOWABLE FORCE PER SEISMIC BRACE ASSEMBLY, Fp	
	TRAN.	LONG.
30° - 45°	670 LBS	500 LBS
46° - 60°	670 LBS	290 LBS

NOTES:

1. REF. SECTION A1 FOR GENERAL NOTES.
2. PROVIDE ROD STIFFENERS ONLY WHERE SEISMIC BRACKETS ARE ATTACHED TO THE ROD AND ROD LENGTH (L) EXCEEDS 25". REF. APPROPRIATE M10 PAGES FOR DETAIL.
3. REF. PAGE A6.0 - A6.2 FOR ALTERNATE ARRANGEMENTS OF SEISMIC BRACES AND ANGLE OR HSS MEMBER AS TRAPEZE.
4. PROVIDE (1) 1/2" DIA. CONNECTION IN CENTER HOLE WHEN STRUT BRACE IS INSTALLED INSIDE THE BRACKET AND (2) 1/2" DIA. CONNECTIONS IN (2) OUTER HOLES WHEN THE BRACE IS INSTALLED OUTSIDE OF THE BRACKET. REF. X2.3 FOR CONNECTION DETAILS.
5. DESIGN PROFESSIONAL SHALL CONSIDER ECCENTRIC LOAD DISTRIBUTION WHEN DETERMINING THE Fp VALUE USED IN DESIGN.

REVIEWED FOR CODE COMPLIANCE
HCAi
OPM-0043
BY: William Staehlin
DATE: 01/23/2023
CALIFORNIA BUILDING CODE 2022

MASON WEST
1601 E. Miraloma Ave. Placentia, CA 92870
TEL (714) 630 - 0701, www.masonwest.com

Jiefu "Jeff" Zhang, SE
California SE No. S5270

PAGE
D14.22

HANGER ROD DIAMETER = 5/8"

RECTANGULAR DUCT TRANSVERSE TRAPEZE SEISMIC SOLID BRACING SYSTEM 100 PLF MAX

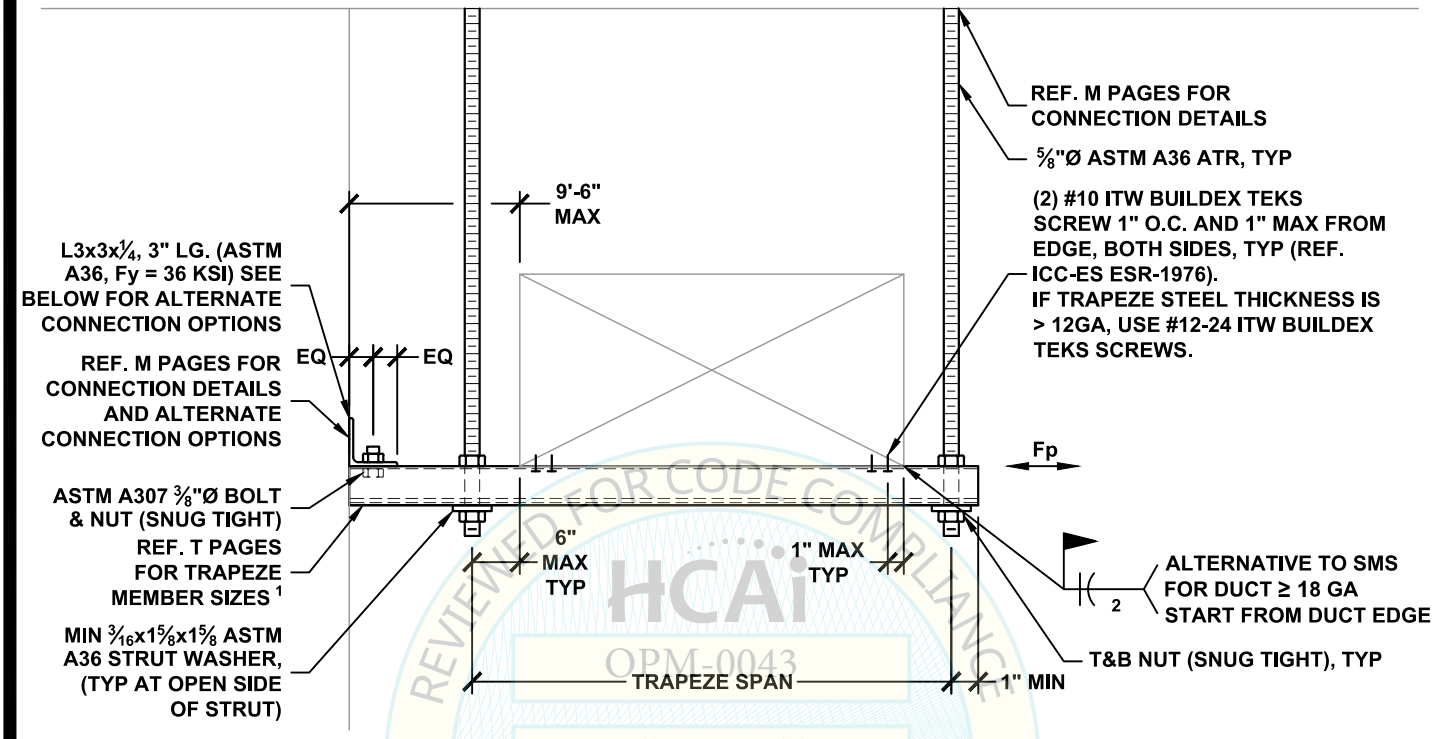

HCAi
OPM-0043
BY: William Staehlin
DATE: 01/23/2023
REVIEWED FOR CODE COMPLIANCE
CALIFORNIA BUILDING CODE, 2022

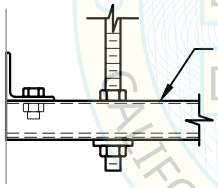

OPTION 1: SINGLE STRUT TRAPEZE

MAX ALLOWABLE FORCE PER SEISMIC BRACE ASSEMBLY, Fp [2]
670 LBS

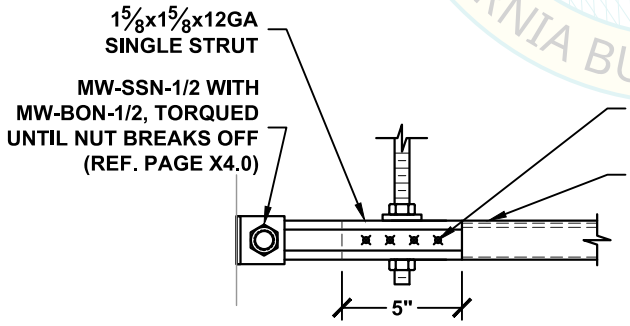

OPTION 2: SINGLE STRUT TRAPEZE

NOTES:

1. TRAPEZE MEMBER MAY BE PROVIDED WITH ROUND HOLES SIZED FOR HANGER RODS. REF. X7.0 & X7.1 FOR STRUT MEMBER DATA.
2. SEPARATE LONGITUDINAL BRACING SHALL BE PROVIDED FOR THE DUCT RUN AS DISCUSSED IN SECTION A1.

MASON WEST
1601 E. Miraloma Ave. Placentia, CA 92870
TEL (714) 630 - 0701, www.masonwest.com

Jiefu "Jeff" Zhang, SE
California SE No. S5270

PAGE
D14.30

HANGER ROD DIAMETER = 5/8"

RECTANGULAR DUCT ALL-DIRECTIONAL TRAPEZE SEISMIC SOLID BRACING SYSTEM 100 PLF MAX

KIT OPTIONS
TS20L
TSH520L

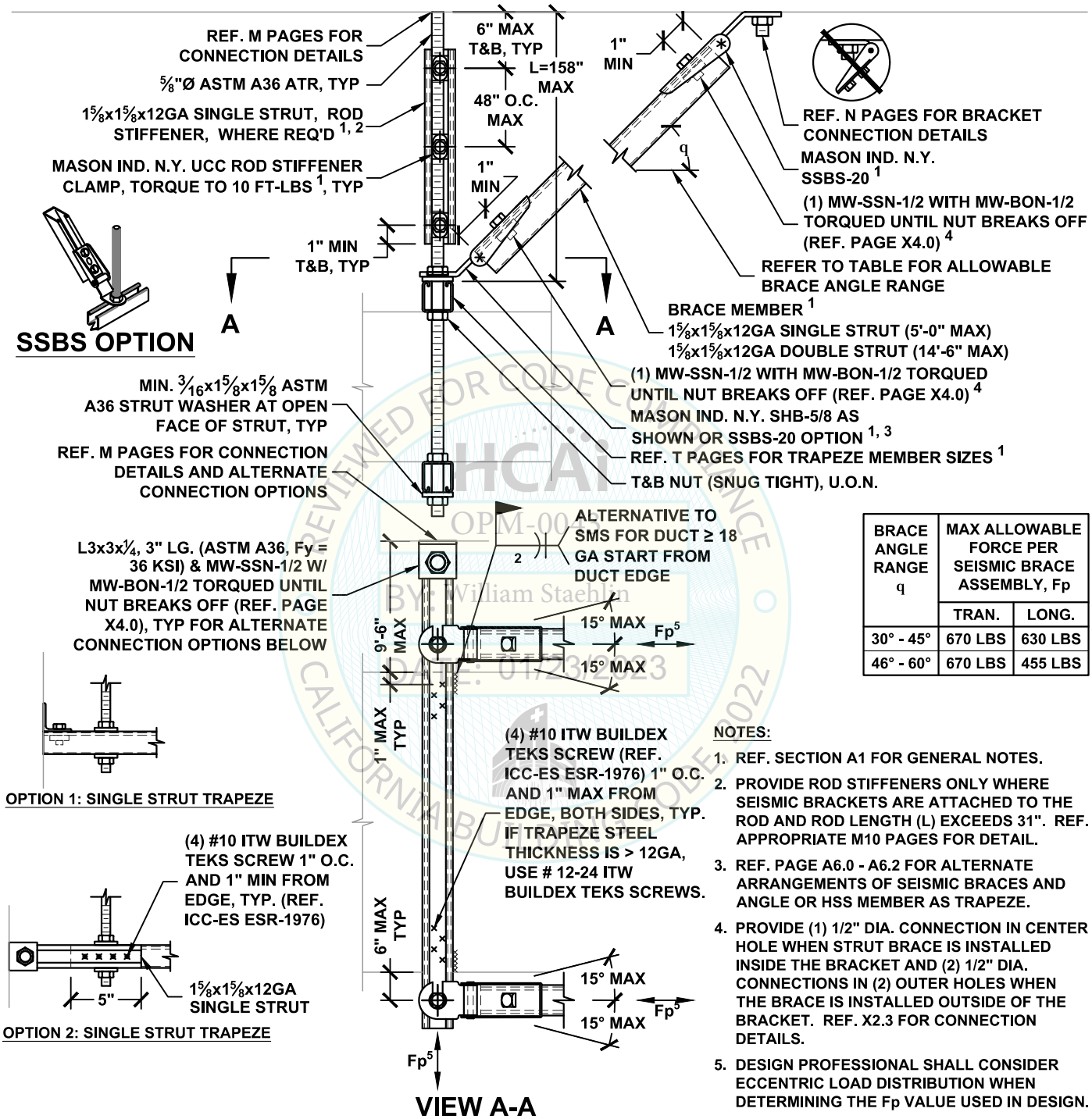

BRACE ANGLE RANGE q	MAX ALLOWABLE FORCE PER SEISMIC BRACE ASSEMBLY, Fp	
	TRAN.	LONG.
30° - 45°	670 LBS	630 LBS
46° - 60°	670 LBS	455 LBS

NOTES:

1. REF. SECTION A1 FOR GENERAL NOTES.
2. PROVIDE ROD STIFFENERS ONLY WHERE SEISMIC BRACKETS ARE ATTACHED TO THE ROD AND ROD LENGTH (L) EXCEEDS 31". REF. APPROPRIATE M10 PAGES FOR DETAIL.
3. REF. PAGE A6.0 - A6.2 FOR ALTERNATE ARRANGEMENTS OF SEISMIC BRACES AND ANGLE OR HSS MEMBER AS TRAPEZE.
4. PROVIDE (1) 1/2" DIA. CONNECTION IN CENTER HOLE WHEN STRUT BRACE IS INSTALLED INSIDE THE BRACKET AND (2) 1/2" DIA. CONNECTIONS IN (2) OUTER HOLES WHEN THE BRACE IS INSTALLED OUTSIDE OF THE BRACKET. REF. X2.3 FOR CONNECTION DETAILS.
5. DESIGN PROFESSIONAL SHALL CONSIDER ECCENTRIC LOAD DISTRIBUTION WHEN DETERMINING THE Fp VALUE USED IN DESIGN.

REVIEWED FOR CODE COMPLIANCE
OPM-0043
By: William Staehlin
DATE: 01/23/2023
CALIFORNIA BUILDING CODE 2022

MASON WEST
1601 E. Miraloma Ave. Placentia, CA 92870
TEL (714) 630 - 0701, www.masonwest.com

Jiefu "Jeff" Zhang, SE
California SE No. S5270

PAGE
D14.32

HANGER ROD DIAMETER = 3/8"	CABLE TRAY TRANSVERSE TRAPEZE SEISMIC SOLID BRACING SYSTEM 20 PLF MAX	KIT OPTIONS TS12T TS1220T TSH312T TSH320T

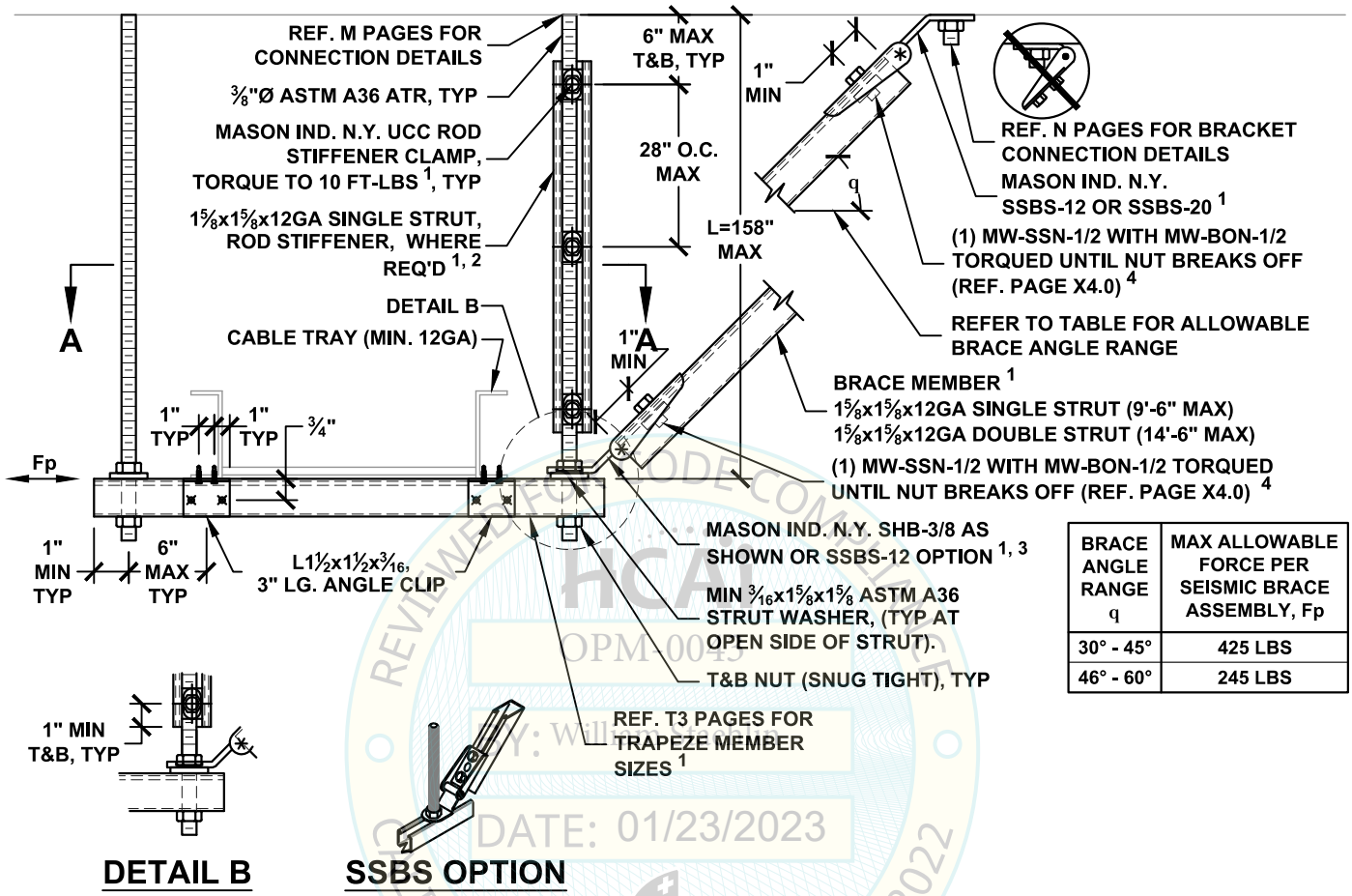

BRACE ANGLE RANGE q	MAX ALLOWABLE FORCE PER SEISMIC BRACE ASSEMBLY, Fp
30° - 45°	425 LBS
46° - 60°	245 LBS

DETAIL B

SSBS OPTION

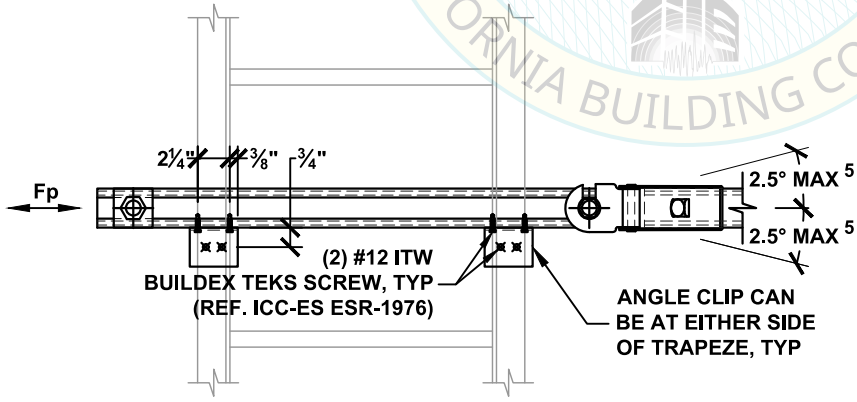

VIEW A-A

NOTES:

1. REF. SECTION A20 FOR GENERAL NOTES.
2. PROVIDE ROD STIFFENING ONLY WHERE SEISMIC BRACKETS ARE ATTACHED TO THE ROD AND ROD LENGTH (L) EXCEEDS 18". REF. APPROPRIATE M10 PAGES FOR DETAIL.
3. REF. PAGE A25.0 FOR ALTERNATE ARRANGEMENTS OF SEISMIC BRACES.
4. PROVIDE (1) 1/2" DIA. CONNECTION IN CENTER HOLE WHEN STRUT BRACE IS INSTALLED INSIDE THE BRACKET AND (2) 1/2" DIA. CONNECTIONS IN (2) OUTER HOLES WHEN THE BRACE IS INSTALLED OUTSIDE OF THE BRACKET. REF. X2.3 FOR CONNECTION DETAILS.
5. TO INCREASE ANGLE UP TO 15°, REF. PAGE A24.1.
6. ITW BUILDEX TEKS SCREW ATTACHMENT TO CABLE TRAY MAY BE STAGGERED PROVIDED THAT THE 1" EDGE DISTANCE AND 1" SPACING IS SATISFIED.

HCAI OPM-0043 REVIEWED FOR CODE COMPLIANCE BY: William Staehlin DATE: 01/23/2023 CALIFORNIA BUILDING CODE 2022

MASON WEST
1601 E. Miraloma Ave. Placentia, CA 92870
TEL (714) 630 - 0701, www.masonwest.com

Jiefu "Jeff" Zhang, SE
California SE No. S5270

HANGER ROD DIAMETER = ⅜"	CABLE TRAY LONGITUDINAL TRAPEZE SEISMIC SOLID BRACING SYSTEM 20 PLF MAX	KIT OPTIONS TS12L TS1220L TSH312L TSH320L

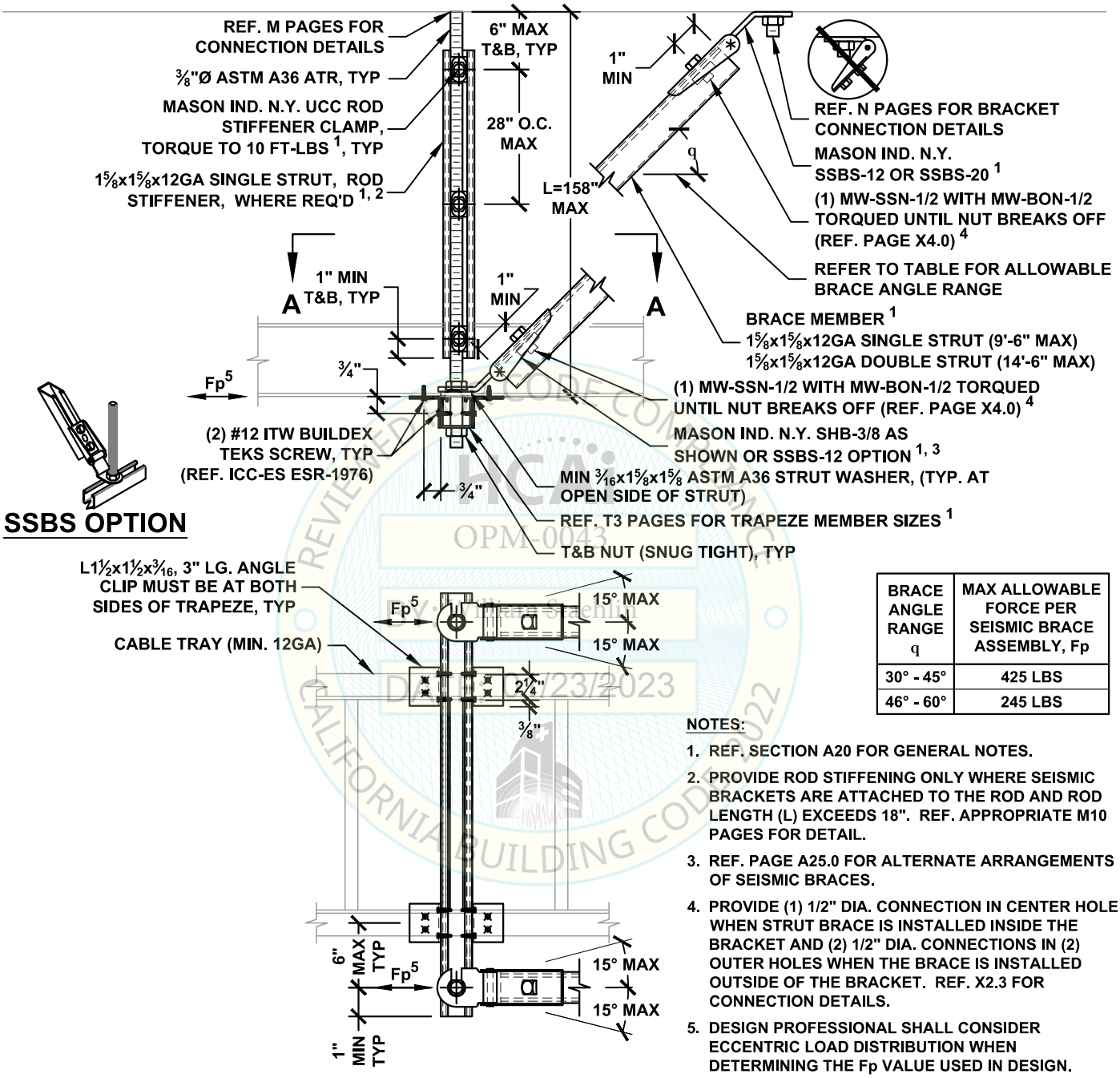

SSBS OPTION

VIEW A-A

BRACE ANGLE RANGE q	MAX ALLOWABLE FORCE PER SEISMIC BRACE ASSEMBLY, Fp
30° - 45°	425 LBS
46° - 60°	245 LBS

NOTES:

1. REF. SECTION A20 FOR GENERAL NOTES.
2. PROVIDE ROD STIFFENING ONLY WHERE SEISMIC BRACKETS ARE ATTACHED TO THE ROD AND ROD LENGTH (L) EXCEEDS 18". REF. APPROPRIATE M10 PAGES FOR DETAIL.
3. REF. PAGE A25.0 FOR ALTERNATE ARRANGEMENTS OF SEISMIC BRACES.
4. PROVIDE (1) 1/2" DIA. CONNECTION IN CENTER HOLE WHEN STRUT BRACE IS INSTALLED INSIDE THE BRACKET AND (2) 1/2" DIA. CONNECTIONS IN (2) OUTER HOLES WHEN THE BRACE IS INSTALLED OUTSIDE OF THE BRACKET. REF. X2.3 FOR CONNECTION DETAILS.
5. DESIGN PROFESSIONAL SHALL CONSIDER ECCENTRIC LOAD DISTRIBUTION WHEN DETERMINING THE Fp VALUE USED IN DESIGN.
6. ITW BUILDEX TEKS SCREW ATTACHMENT TO CABLE TRAY MAY BE STAGGERED PROVIDED THAT THE 1" EDGE DISTANCE AND 1" SPACING IS SATISFIED.

OPM-0043 Reviewed for Code Compliance by William Staehlin DATE: 1/23/2023 CALIFORNIA BUILDING CODE 2022

MASON WEST
1601 E. Miraloma Ave. Placentia, CA 92870
TEL (714) 630 - 0701, www.masonwest.com

Jiefu "Jeff" Zhang, SE
California SE No. S5270

HANGER ROD DIAMETER = ⅜"

CABLE TRAY ALL-DIRECTIONAL TRAPEZE SEISMIC SOLID BRACING SYSTEM 20 PLF MAX

KIT OPTIONS
TS12A
TS1220A
TSH312A
TSH320A

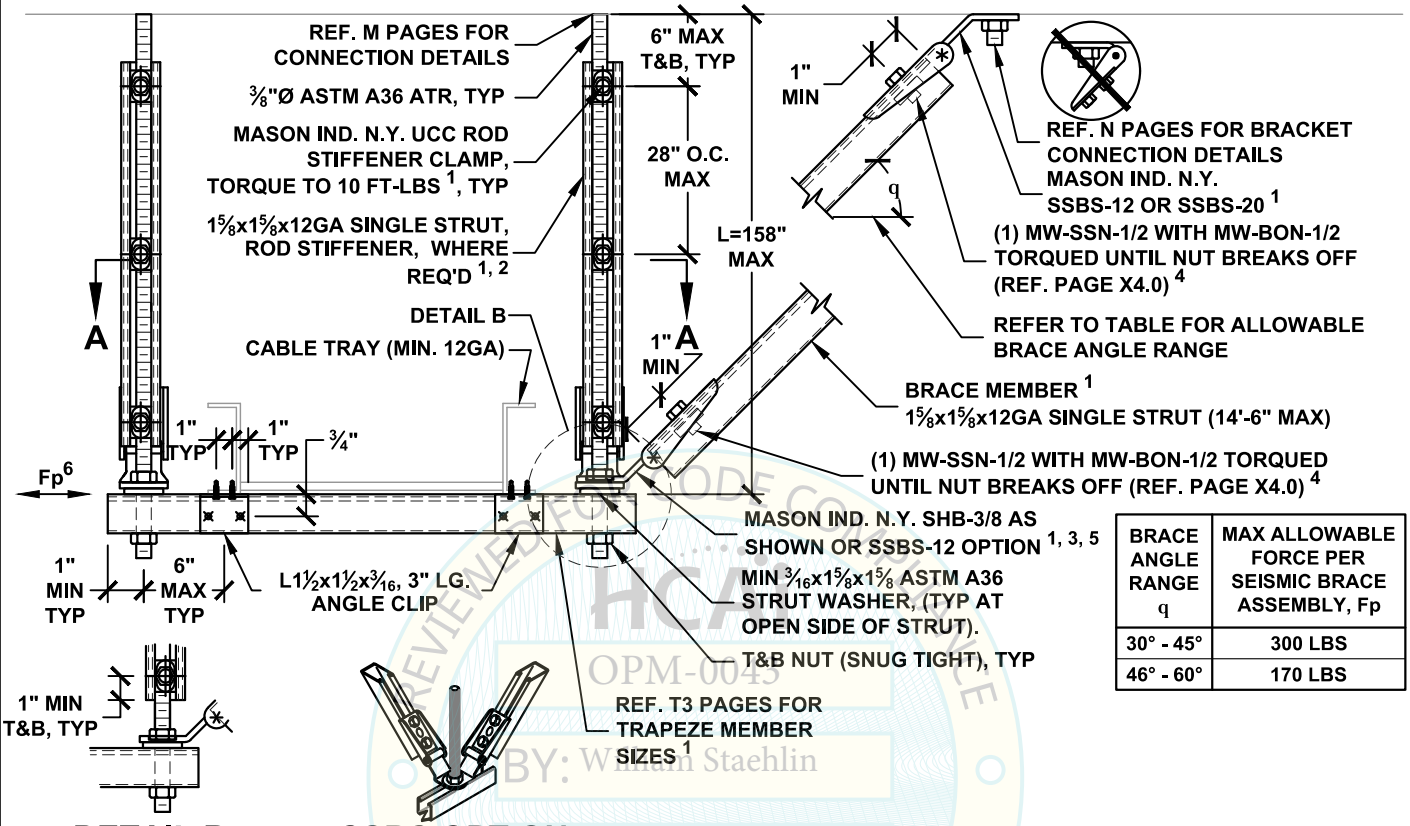

BRACE ANGLE RANGE q	MAX ALLOWABLE FORCE PER SEISMIC BRACE ASSEMBLY, Fp
30° - 45°	300 LBS
46° - 60°	170 LBS

DETAIL B

SSBS OPTION

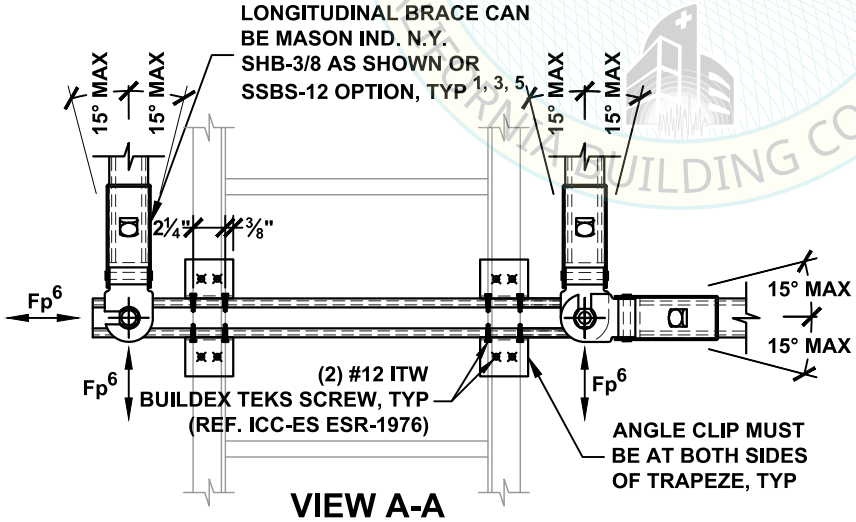

VIEW A-A

NOTES:

1. REF. SECTION A20 FOR GENERAL NOTES.
2. PROVIDE ROD STIFFENING ONLY WHERE SEISMIC BRACKETS ARE ATTACHED TO THE ROD AND ROD LENGTH (L) EXCEEDS 18". REF. APPROPRIATE M10 PAGES FOR DETAIL.
3. REF. PAGE A25.0 FOR ALTERNATE ARRANGEMENTS OF SEISMIC BRACES.
4. PROVIDE (1) 1/2" DIA. CONNECTION IN CENTER HOLE WHEN STRUT BRACE IS INSTALLED INSIDE THE BRACKET AND (2) 1/2" DIA. CONNECTIONS IN (2) OUTER HOLES WHEN THE BRACE IS INSTALLED OUTSIDE OF THE BRACKET. REF. X2.3 FOR CONNECTION DETAILS.
5. MW-KY-38 MUST BE USED ON TOP OF BOTTOM SHB WHEN STACKING (2) SHB ON THE SAME ROD, REF X2.4.
6. DESIGN PROFESSIONAL SHALL CONSIDER ECCENTRIC LOAD DISTRIBUTION WHEN DETERMINING THE Fp VALUE USED IN DESIGN.
7. ITW BUILDEX TEKS SCREW ATTACHMENT TO CABLE TRAY MAY BE STAGGERED PROVIDED THAT THE 1" EDGE DISTANCE AND 1" SPACING IS SATISFIED.

HCAI OPM-0043 REVIEWED FOR CODE COMPLIANCE BY: William Staehlin DATE: 01/23/2023 CALIFORNIA BUILDING CODE

MASON WEST
1601 E. Miraloma Ave. Placentia, CA 92870
TEL (714) 630 - 0701, www.masonwest.com

Jiefu "Jeff" Zhang, SE
California SE No. S5270

PAGE
E1.12

HANGER ROD DIAMETER = ½"	CABLE TRAY TRANSVERSE TRAPEZE SEISMIC SOLID BRACING SYSTEM 45 PLF MAX	KIT OPTIONS TS12T TS1220T TSH412T TSH420T

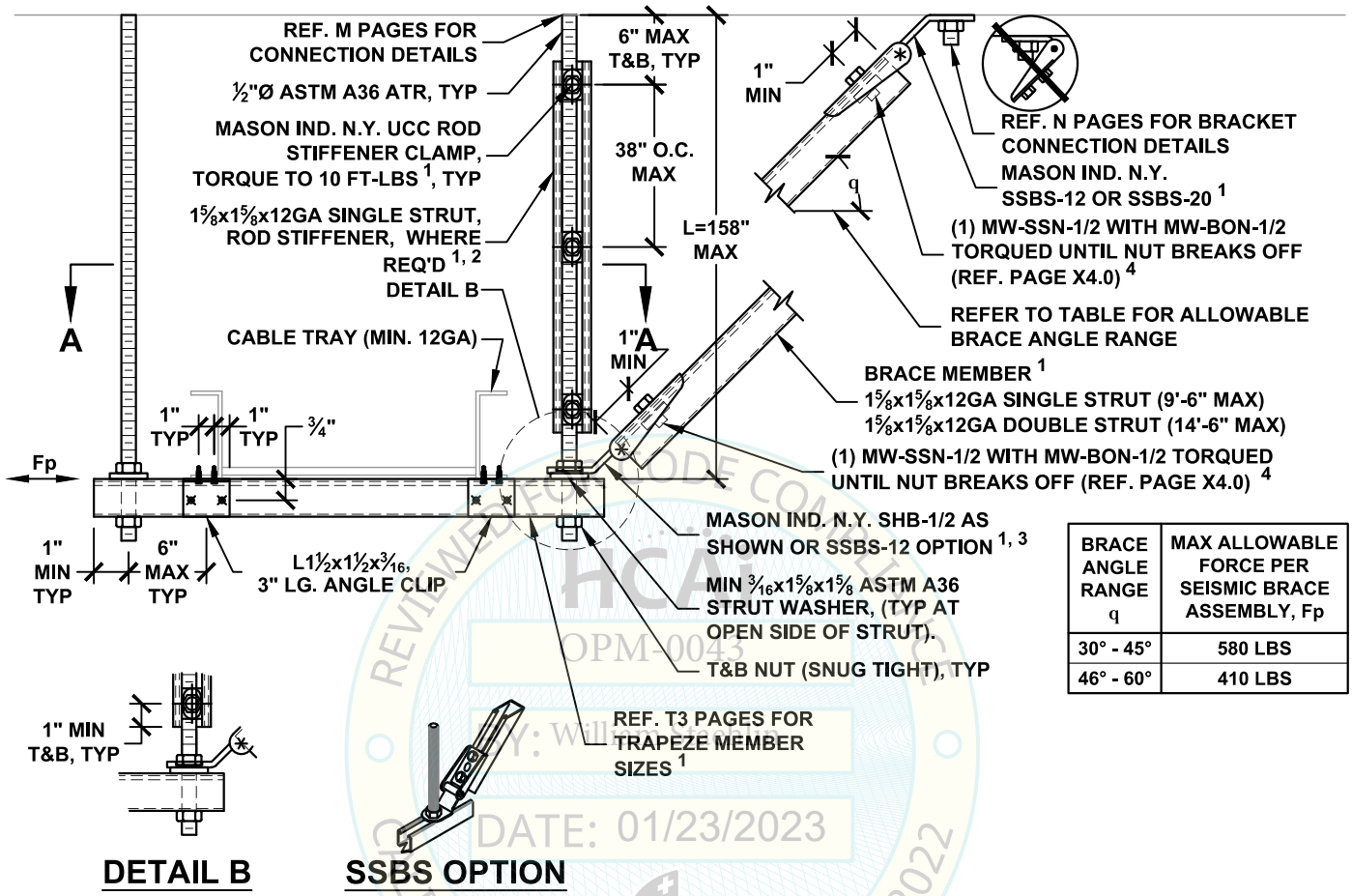

BRACE ANGLE RANGE q	MAX ALLOWABLE FORCE PER SEISMIC BRACE ASSEMBLY, Fp
30° - 45°	580 LBS
46° - 60°	410 LBS

DETAIL B

SSBS OPTION

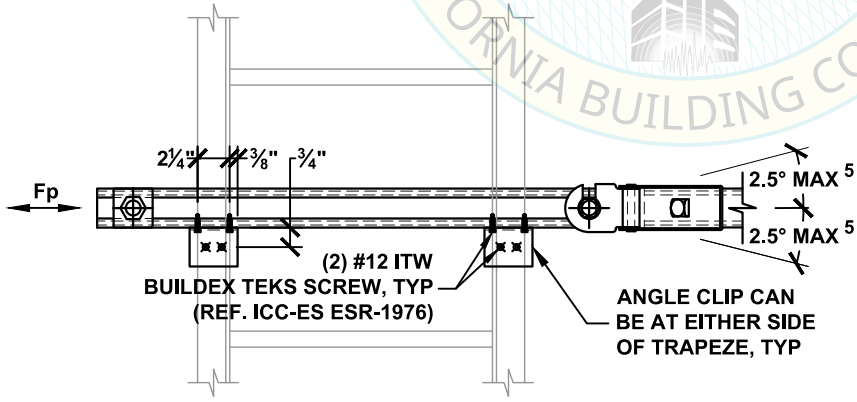

VIEW A-A

NOTES:

1. REF. SECTION A20 FOR GENERAL NOTES.
2. PROVIDE ROD STIFFENING ONLY WHERE SEISMIC BRACKETS ARE ATTACHED TO THE ROD AND ROD LENGTH (L) EXCEEDS 25". REF. APPROPRIATE M10 PAGES FOR DETAIL.
3. REF. PAGE A25.0 FOR ALTERNATE ARRANGEMENTS OF SEISMIC BRACES.
4. PROVIDE (1) 1/2" DIA. CONNECTION IN CENTER HOLE WHEN STRUT BRACE IS INSTALLED INSIDE THE BRACKET AND (2) 1/2" DIA. CONNECTIONS IN (2) OUTER HOLES WHEN THE BRACE IS INSTALLED OUTSIDE OF THE BRACKET. REF. X2.3 FOR CONNECTION DETAILS.
5. TO INCREASE ANGLE UP TO 15°, REF. PAGE A24.1.
6. ITW BUILDEX TEKS SCREW ATTACHMENT TO CABLE TRAY MAY BE STAGGERED PROVIDED THAT THE 1" EDGE DISTANCE AND 1" SPACING IS SATISFIED.

REVIEWED FOR CODE COMPLIANCE
HCAI
OPM-0043
BY: William Staehlin
DATE: 01/23/2023
CALIFORNIA BUILDING CODE 2022

MASON WEST
1601 E. Miraloma Ave. Placentia, CA 92870
TEL (714) 630 - 0701, www.masonwest.com

Jiefu "Jeff" Zhang, SE
California SE No. S5270

PAGE
E1.20

HANGER ROD DIAMETER = ½"	CABLE TRAY LONGITUDINAL TRAPEZE SEISMIC SOLID BRACING SYSTEM 45 PLF MAX	KIT OPTIONS TS12L TS1220L TSH412L TSH420L

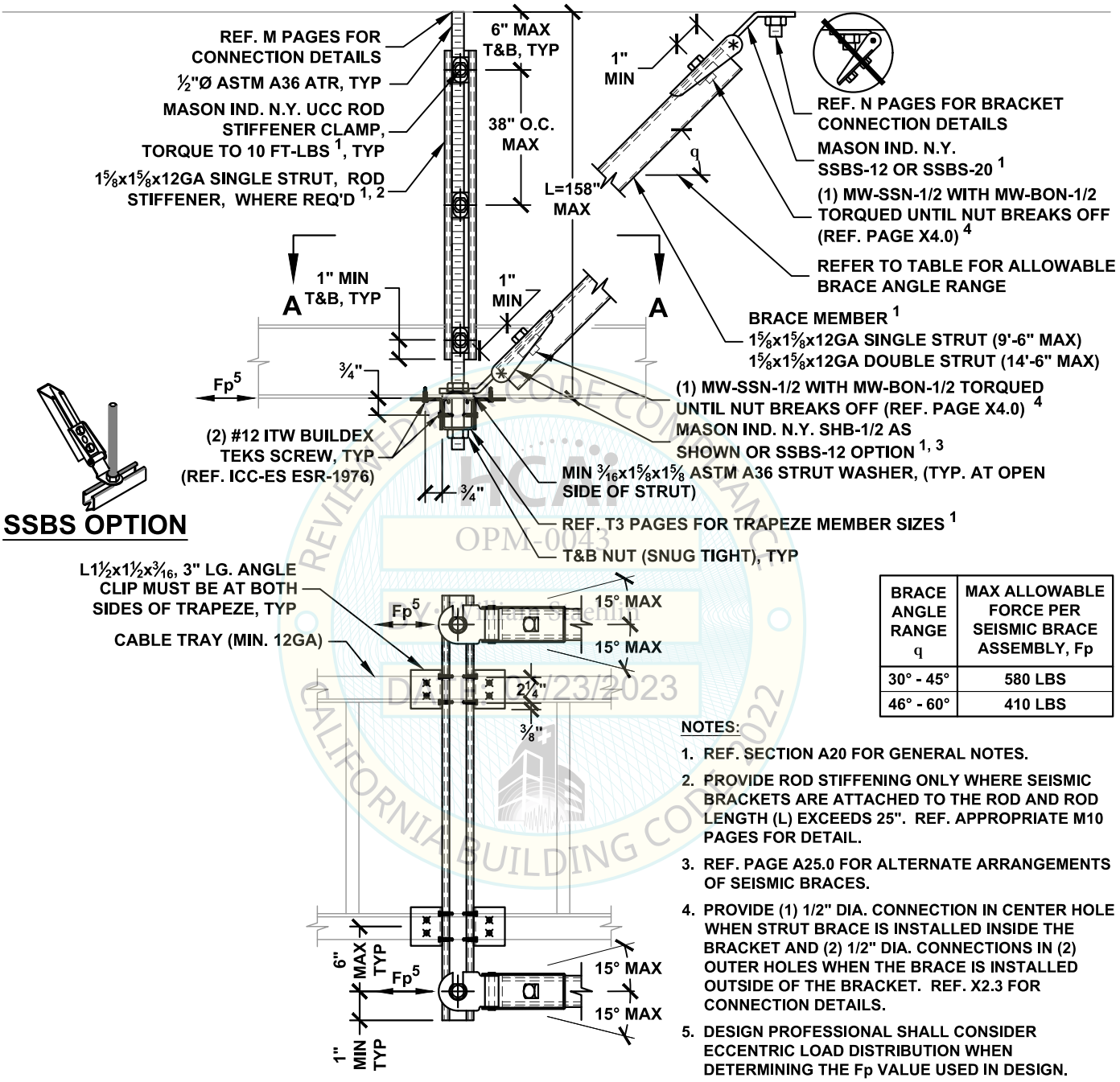

SSBS OPTION

VIEW A-A

BRACE ANGLE RANGE q	MAX ALLOWABLE FORCE PER SEISMIC BRACE ASSEMBLY, Fp
30° - 45°	580 LBS
46° - 60°	410 LBS

NOTES:

1. REF. SECTION A20 FOR GENERAL NOTES.
2. PROVIDE ROD STIFFENING ONLY WHERE SEISMIC BRACKETS ARE ATTACHED TO THE ROD AND ROD LENGTH (L) EXCEEDS 25". REF. APPROPRIATE M10 PAGES FOR DETAIL.
3. REF. PAGE A25.0 FOR ALTERNATE ARRANGEMENTS OF SEISMIC BRACES.
4. PROVIDE (1) 1/2" DIA. CONNECTION IN CENTER HOLE WHEN STRUT BRACE IS INSTALLED INSIDE THE BRACKET AND (2) 1/2" DIA. CONNECTIONS IN (2) OUTER HOLES WHEN THE BRACE IS INSTALLED OUTSIDE OF THE BRACKET. REF. X2.3 FOR CONNECTION DETAILS.
5. DESIGN PROFESSIONAL SHALL CONSIDER ECCENTRIC LOAD DISTRIBUTION WHEN DETERMINING THE Fp VALUE USED IN DESIGN.
6. ITW BUILDEX TEKS SCREW ATTACHMENT TO CABLE TRAY MAY BE STAGGERED PROVIDED THAT THE 1" EDGE DISTANCE AND 1" SPACING IS SATISFIED.

ICC-ES REVIEWED FOR CODE COMPLIANCE CALIFORNIA BUILDING CODE 2022 OPM-0043 Reviewed by William Staehlin DATE: 1/23/2023

MASON WEST
1601 E. Miraloma Ave. Placentia, CA 92870
TEL (714) 630 - 0701, www.masonwest.com

Jiefu "Jeff" Zhang, SE
California SE No. S5270

PAGE
E1.21

HANGER ROD DIAMETER = ½"

CABLE TRAY ALL-DIRECTIONAL TRAPEZE SEISMIC SOLID BRACING SYSTEM 45 PLF MAX

KIT OPTIONS
TS12A
TS1220A
TSH412A
TSH420A

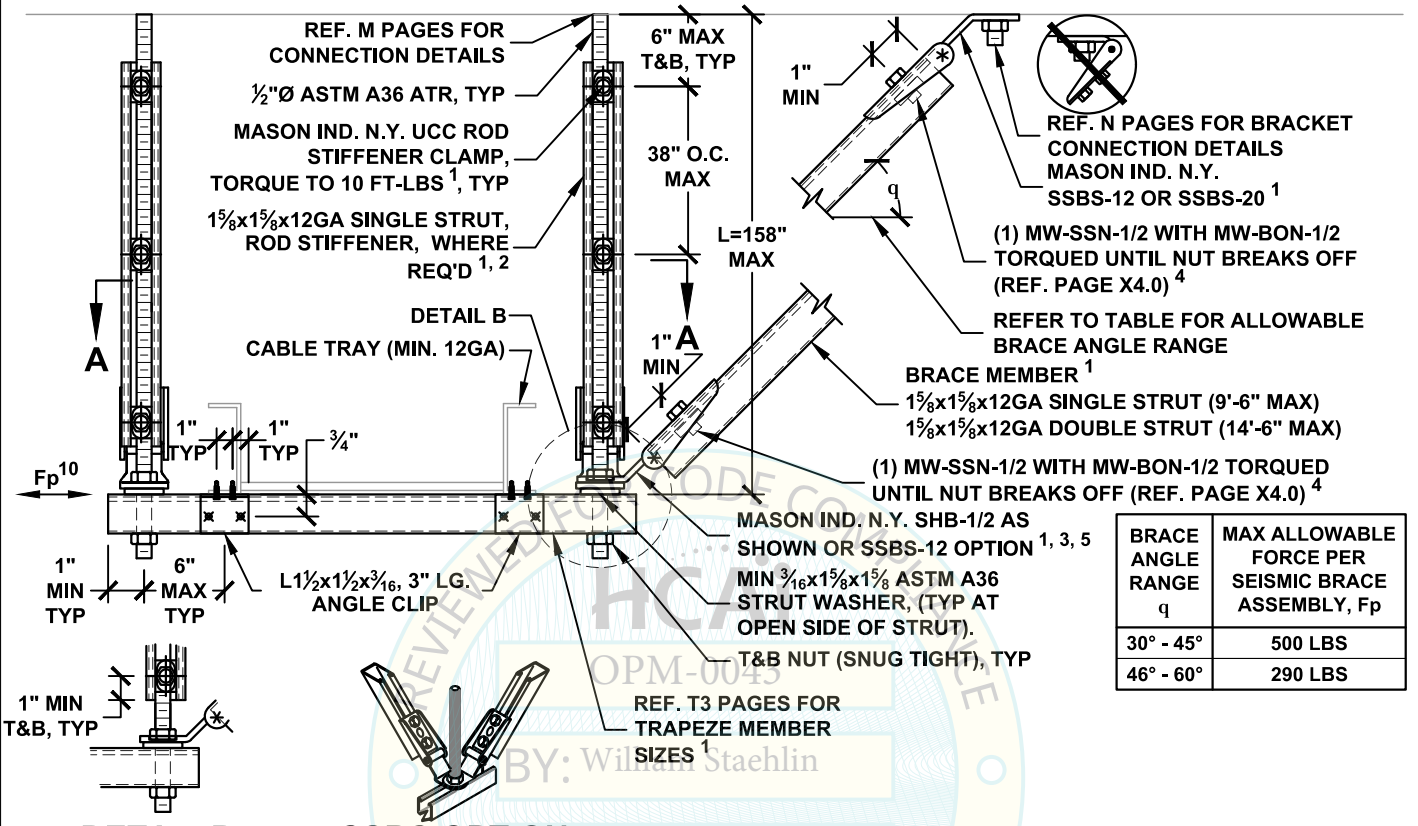

BRACE ANGLE RANGE q	MAX ALLOWABLE FORCE PER SEISMIC BRACE ASSEMBLY, Fp
30° - 45°	500 LBS
46° - 60°	290 LBS

DETAIL B

SSBS OPTION

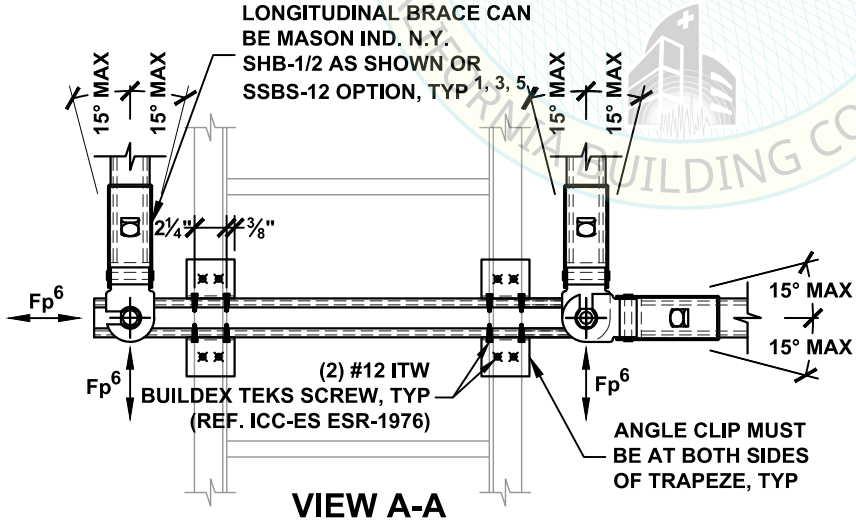

VIEW A-A

NOTES:

1. REF. SECTION A20 FOR GENERAL NOTES.
2. PROVIDE ROD STIFFENING ONLY WHERE SEISMIC BRACKETS ARE ATTACHED TO THE ROD AND ROD LENGTH (L) EXCEEDS 25". REF. APPROPRIATE M10 PAGES FOR DETAIL.
3. REF. PAGE A25.0 FOR ALTERNATE ARRANGEMENTS OF SEISMIC BRACES.
4. PROVIDE (1) 1/2" DIA. CONNECTION IN CENTER HOLE WHEN STRUT BRACE IS INSTALLED INSIDE THE BRACKET AND (2) 1/2" DIA. CONNECTIONS IN (2) OUTER HOLES WHEN THE BRACE IS INSTALLED OUTSIDE OF THE BRACKET. REF. X2.3 FOR CONNECTION DETAILS.
5. MW-KY-50 MUST BE USED ON TOP OF BOTTOM SHB WHEN STACKING (2) SHB ON THE SAME ROD, REF X2.4.
6. DESIGN PROFESSIONAL SHALL CONSIDER ECCENTRIC LOAD DISTRIBUTION WHEN DETERMINING THE Fp VALUE USED IN DESIGN.
7. ITW BUILDEX TEKS SCREW ATTACHMENT TO CABLE TRAY MAY BE STAGGERED PROVIDED THAT THE 1" EDGE DISTANCE AND 1" SPACING IS SATISFIED.

REVIEWED FOR CODE COMPLIANCE
HCAI
OPM-0043
BY: William Staehlin
DATE: 01/23/2023
CALIFORNIA BUILDING CODE

MASON WEST
1601 E. Miraloma Ave. Placentia, CA 92870
TEL (714) 630 - 0701, www.masonwest.com

Jiefu "Jeff" Zhang, SE
California SE No. S5270

PAGE
E1.22

HANGER ROD DIAMETER = 5/8"	CABLE TRAY TRANSVERSE TRAPEZE SEISMIC SOLID BRACING SYSTEM 85 PLF MAX	KIT OPTIONS TS20T TSH520T

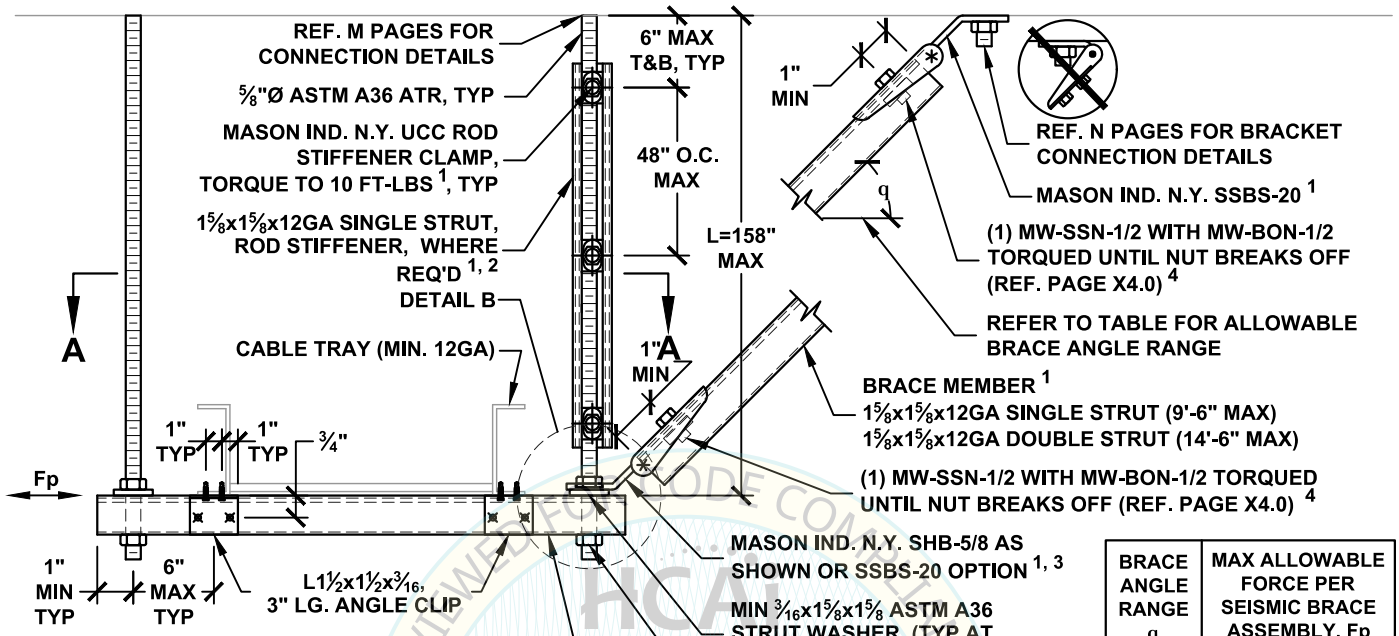

BRACE ANGLE RANGE q	MAX ALLOWABLE FORCE PER SEISMIC BRACE ASSEMBLY, Fp
30° - 45°	580 LBS
46° - 60°	410 LBS

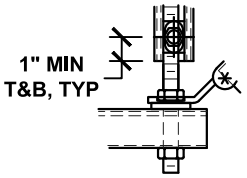

DETAIL B

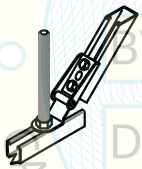

SSBS OPTION

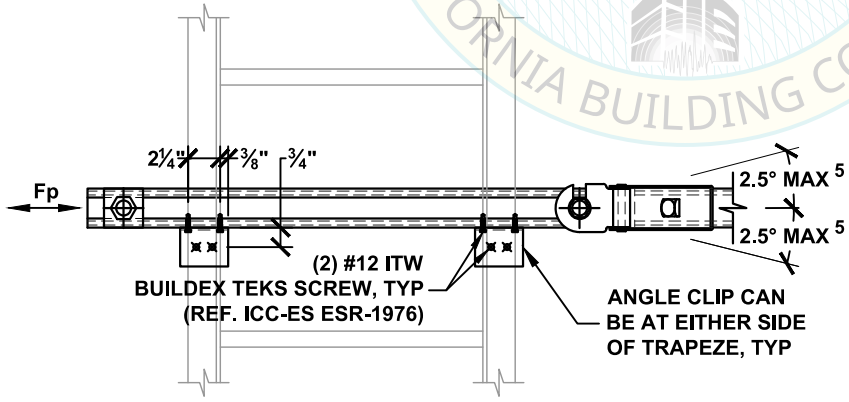

VIEW A-A

NOTES:

1. REF. SECTION A20 FOR GENERAL NOTES.
2. PROVIDE ROD STIFFENING ONLY WHERE SEISMIC BRACKETS ARE ATTACHED TO THE ROD AND ROD LENGTH (L) EXCEEDS 31". REF. APPROPRIATE M10 PAGES FOR DETAIL.
3. REF. PAGE A25.0 FOR ALTERNATE ARRANGEMENTS OF SEISMIC BRACES.
4. PROVIDE (1) 1/2" DIA. CONNECTION IN CENTER HOLE WHEN STRUT BRACE IS INSTALLED INSIDE THE BRACKET AND (2) 1/2" DIA. CONNECTIONS IN (2) OUTER HOLES WHEN THE BRACE IS INSTALLED OUTSIDE OF THE BRACKET. REF. X2.3 FOR CONNECTION DETAILS.
5. TO INCREASE ANGLE UP TO 15°, REF. PAGE A24.1.
6. ITW BUILDEX TEKS SCREW ATTACHMENT TO CABLE TRAY MAY BE STAGGERED PROVIDED THAT THE 1" EDGE DISTANCE AND 1" SPACING IS SATISFIED.

HCAI OPM-0043 REVIEWED FOR CODE COMPLIANCE BY: William Staehlin DATE: 01/23/2023 CALIFORNIA BUILDING CODE 2022

MASON WEST
1601 E. Miraloma Ave. Placentia, CA 92870
TEL (714) 630 - 0701, www.masonwest.com

Jiefu "Jeff" Zhang, SE
California SE No. S5270

PAGE
E1.30

HANGER ROD DIAMETER = 5/8"	CABLE TRAY LONGITUDINAL TRAPEZE SEISMIC SOLID BRACING SYSTEM 85 PLF MAX	KIT OPTIONS TS20L TSH520L

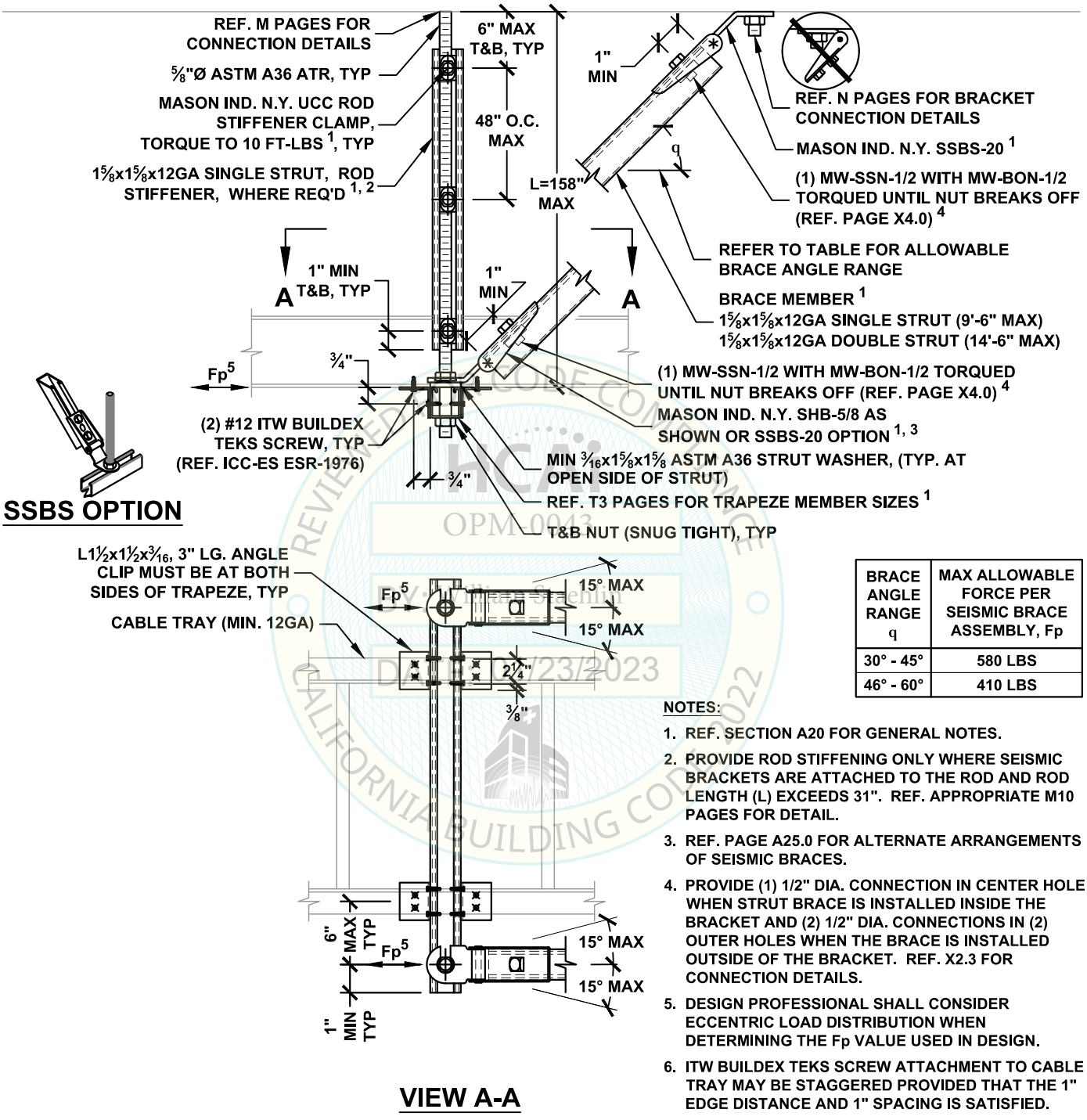

SSBS OPTION

VIEW A-A

BRACE ANGLE RANGE q	MAX ALLOWABLE FORCE PER SEISMIC BRACE ASSEMBLY, Fp
30° - 45°	580 LBS
46° - 60°	410 LBS

NOTES:

1. REF. SECTION A20 FOR GENERAL NOTES.
2. PROVIDE ROD STIFFENING ONLY WHERE SEISMIC BRACKETS ARE ATTACHED TO THE ROD AND ROD LENGTH (L) EXCEEDS 31". REF. APPROPRIATE M10 PAGES FOR DETAIL.
3. REF. PAGE A25.0 FOR ALTERNATE ARRANGEMENTS OF SEISMIC BRACES.
4. PROVIDE (1) 1/2" DIA. CONNECTION IN CENTER HOLE WHEN STRUT BRACE IS INSTALLED INSIDE THE BRACKET AND (2) 1/2" DIA. CONNECTIONS IN (2) OUTER HOLES WHEN THE BRACE IS INSTALLED OUTSIDE OF THE BRACKET. REF. X2.3 FOR CONNECTION DETAILS.
5. DESIGN PROFESSIONAL SHALL CONSIDER ECCENTRIC LOAD DISTRIBUTION WHEN DETERMINING THE Fp VALUE USED IN DESIGN.
6. ITW BUILDEX TEKS SCREW ATTACHMENT TO CABLE TRAY MAY BE STAGGERED PROVIDED THAT THE 1" EDGE DISTANCE AND 1" SPACING IS SATISFIED.

REVIEWED FOR CODE COMPLIANCE CALIFORNIA BUILDING CODE 2022 HCAI OPM-0043 By: William Staehlin DATE: 1/23/2023

MASON WEST
1601 E. Miraloma Ave. Placentia, CA 92870
TEL (714) 630 - 0701, www.masonwest.com

Jiefu "Jeff" Zhang, SE
California SE No. S5270

PAGE
E1.31

HANGER ROD DIAMETER = 5/8"

CABLE TRAY ALL-DIRECTIONAL TRAPEZE SEISMIC SOLID BRACING SYSTEM 85 PLF MAX

KIT OPTIONS
TS20A
TSH520A

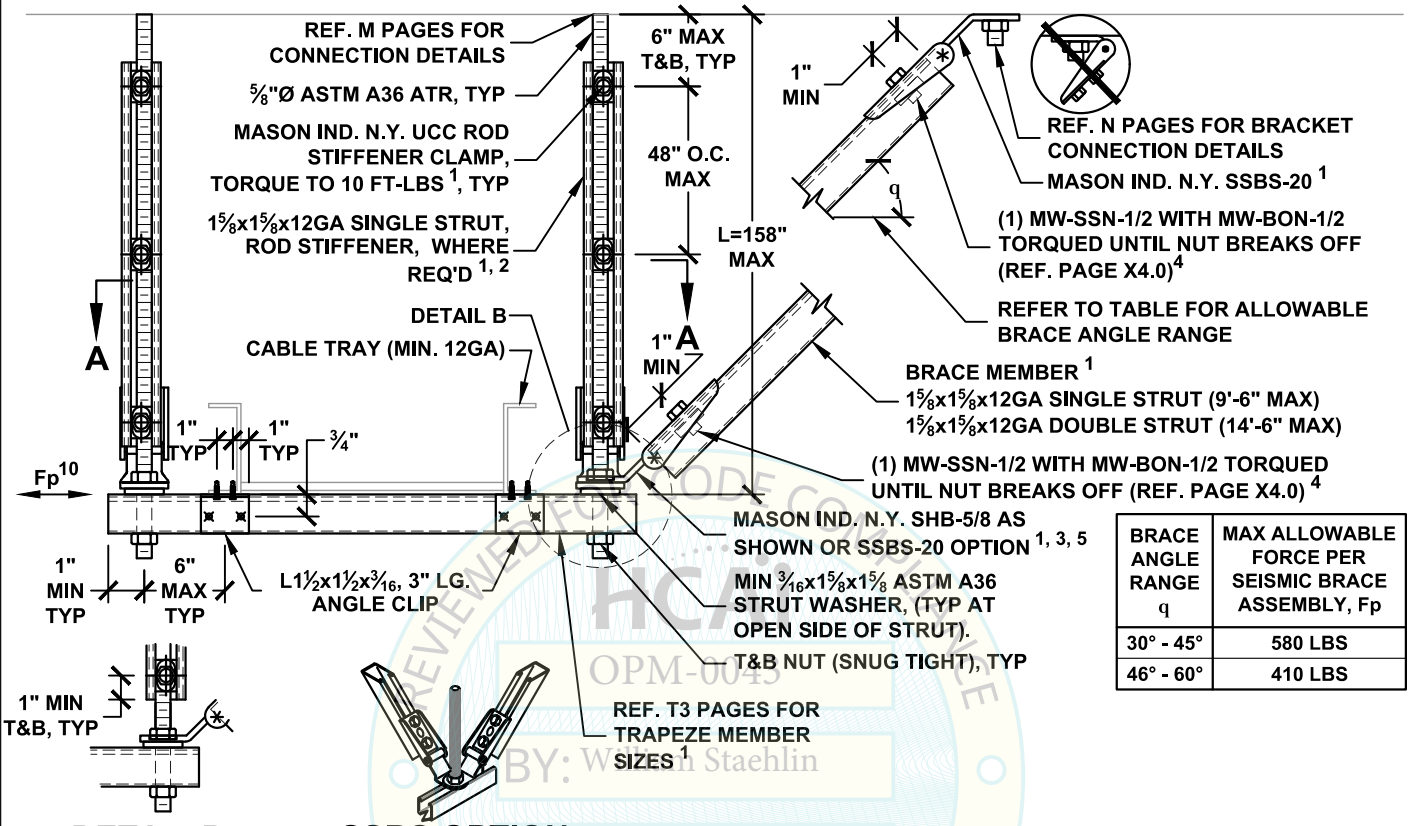

BRACE ANGLE RANGE q	MAX ALLOWABLE FORCE PER SEISMIC BRACE ASSEMBLY, Fp
30° - 45°	580 LBS
46° - 60°	410 LBS

DETAIL B

SSBS OPTION

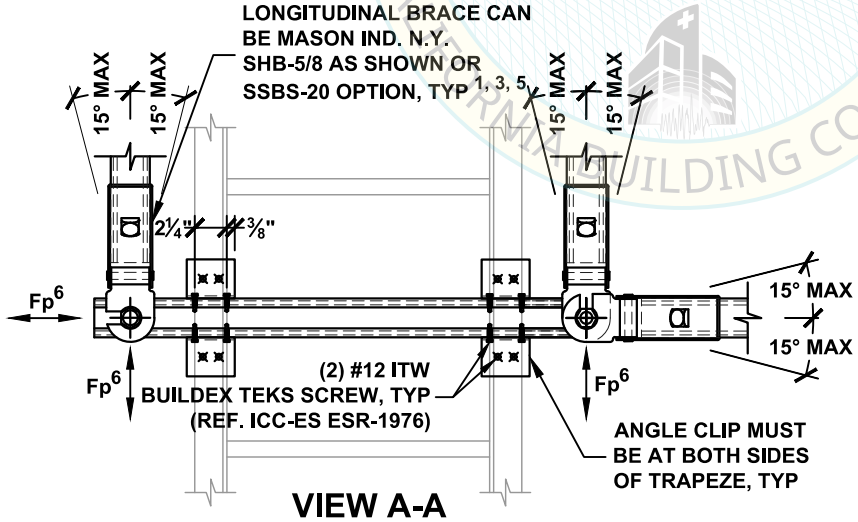

VIEW A-A

NOTES:

1. REF. SECTION A20 FOR GENERAL NOTES..
2. PROVIDE ROD STIFFENING ONLY WHERE SEISMIC BRACKETS ARE ATTACHED TO THE ROD AND ROD LENGTH (L) EXCEEDS 31". REF. APPROPRIATE M10 PAGES FOR DETAIL.
3. REF. PAGE A25.0 FOR ALTERNATE ARRANGEMENTS OF SEISMIC BRACES.
4. PROVIDE (1) 1/2" DIA. CONNECTION IN CENTER HOLE WHEN STRUT BRACE IS INSTALLED INSIDE THE BRACKET AND (2) 1/2" DIA. CONNECTIONS IN (2) OUTER HOLES WHEN THE BRACE IS INSTALLED OUTSIDE OF THE BRACKET. REF. X2.3 FOR CONNECTION DETAILS.
5. MW-KY-63 MUST BE USED ON TOP OF BOTTOM SHB WHEN STACKING (2) SHB ON THE SAME ROD, REF X2.4.
6. DESIGN PROFESSIONAL SHALL CONSIDER ECCENTRIC LOAD DISTRIBUTION WHEN DETERMINING THE Fp VALUE USED IN DESIGN.
7. ITW BUILDEX TEKS SCREW ATTACHMENT TO CABLE TRAY MAY BE STAGGERED PROVIDED THAT THE 1" EDGE DISTANCE AND 1" SPACING IS SATISFIED.

OPM-0043 BY: William Staehlin DATE: 01/23/2023

MASON WEST
1601 E. Miraloma Ave. Placentia, CA 92870
TEL (714) 630 - 0701, www.masonwest.com

Jiefu "Jeff" Zhang, SE
California SE No. S5270

PAGE
E1.32

HANGER ROD DIAMETER = 3/8"	CABLE TRAY TRANSVERSE TRAPEZE SEISMIC CABLE BRACING SYSTEM 20 PLF MAX	KIT OPTIONS TC0T

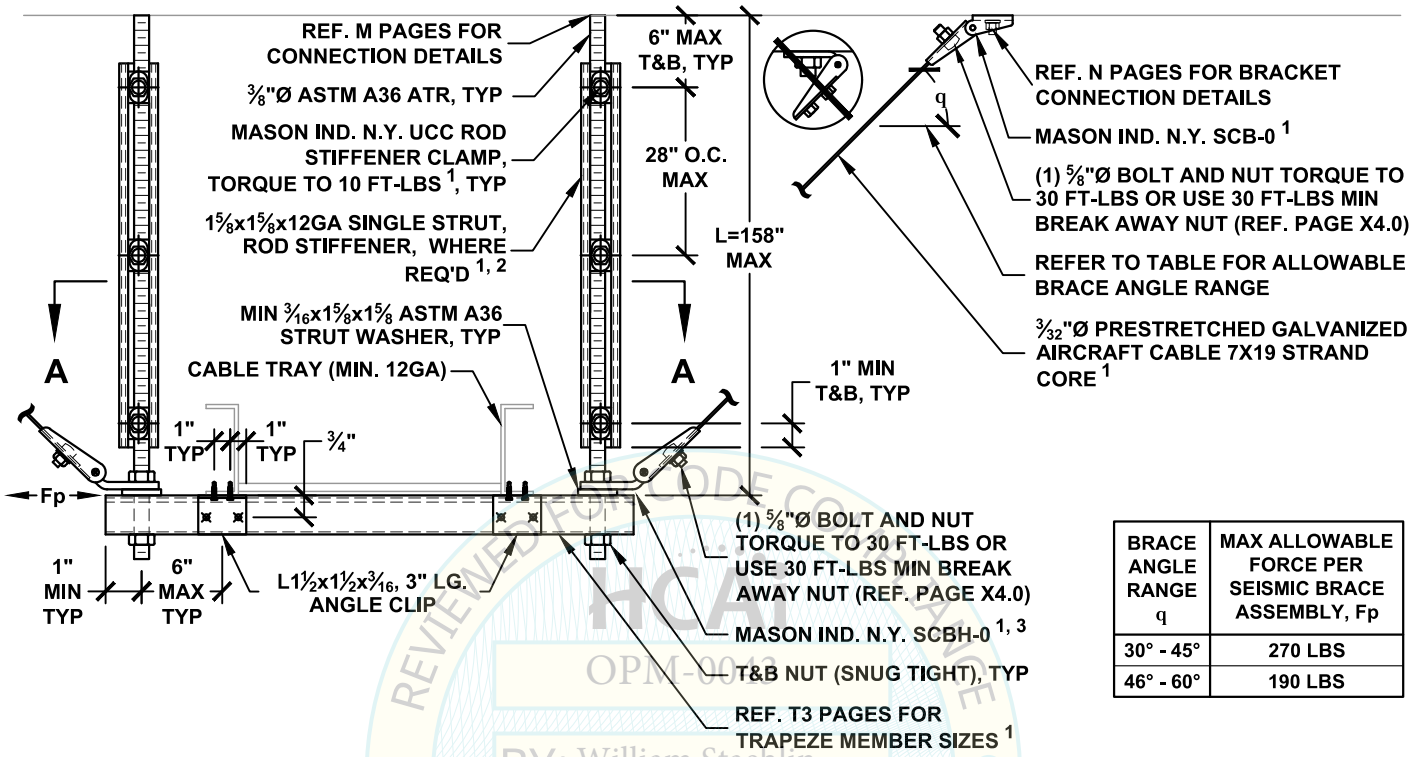

BRACE ANGLE RANGE q	MAX ALLOWABLE FORCE PER SEISMIC BRACE ASSEMBLY, Fp
30° - 45°	270 LBS
46° - 60°	190 LBS

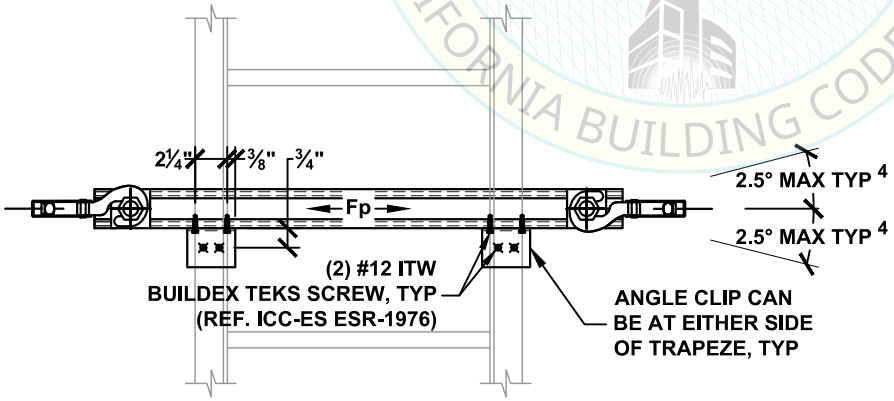

VIEW A-A

NOTES:

1. REF. SECTION A20 FOR GENERAL NOTES.
2. PROVIDE ROD STIFFENING ONLY WHERE SEISMIC BRACKETS ARE ATTACHED TO THE ROD AND ROD LENGTH (L) EXCEEDS 18". REF. APPROPRIATE M10 PAGES FOR DETAIL.
3. REF. PAGE A25.0 FOR ALTERNATE ARRANGEMENTS OF SEISMIC BRACES.
4. TO INCREASE ANGLE UP TO 15°, REF. PAGE A24.1.
5. ITW BUILDEX TEKS SCREW ATTACHMENT TO CABLE TRAY MAY BE STAGGERED PROVIDED THAT THE 1" EDGE DISTANCE AND 1" SPACING IS SATISFIED.

REVIEWED FOR CODE COMPLIANCE
HCAI
OPM-0043
BY: William Staehlin
DATE: 01/23/2023
CALIFORNIA BUILDING CODE, 2022

MASON WEST
1601 E. Miraloma Ave. Placentia, CA 92870
TEL (714) 630 - 0701, www.masonwest.com

Jiefu "Jeff" Zhang, SE
California SE No. S5270

PAGE
E2.10

HANGER ROD DIAMETER = 3/8"	CABLE TRAY LONGITUDINAL TRAPEZE SEISMIC CABLE BRACING SYSTEM 20 PLF MAX	KIT OPTIONS TC0L

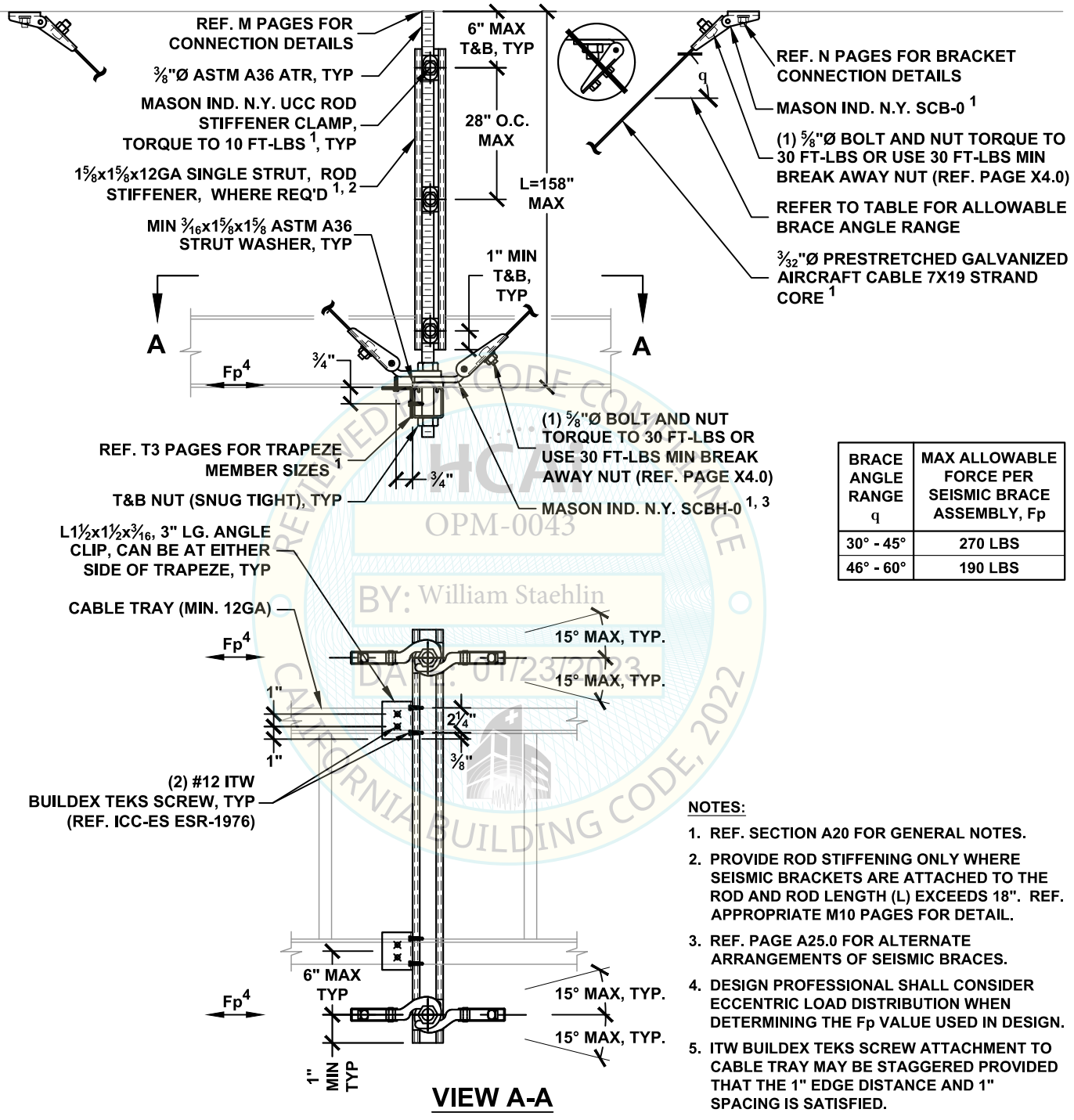

VIEW A-A

BRACE ANGLE RANGE q	MAX ALLOWABLE FORCE PER SEISMIC BRACE ASSEMBLY, Fp
30° - 45°	270 LBS
46° - 60°	190 LBS

NOTES:

1. REF. SECTION A20 FOR GENERAL NOTES.
2. PROVIDE ROD STIFFENING ONLY WHERE SEISMIC BRACKETS ARE ATTACHED TO THE ROD AND ROD LENGTH (L) EXCEEDS 18". REF. APPROPRIATE M10 PAGES FOR DETAIL.
3. REF. PAGE A25.0 FOR ALTERNATE ARRANGEMENTS OF SEISMIC BRACES.
4. DESIGN PROFESSIONAL SHALL CONSIDER ECCENTRIC LOAD DISTRIBUTION WHEN DETERMINING THE Fp VALUE USED IN DESIGN.
5. ITW BUILDEX TEKS SCREW ATTACHMENT TO CABLE TRAY MAY BE STAGGERED PROVIDED THAT THE 1" EDGE DISTANCE AND 1" SPACING IS SATISFIED.

REVIEWED FOR CODE COMPLIANCE
HCAI
OPM-0043
BY: William Staehlin
DATE: 01/23/2023
CALIFORNIA BUILDING CODE, 2022

MASON WEST
1601 E. Miraloma Ave. Placentia, CA 92870
TEL (714) 630 - 0701, www.masonwest.com

Jiefu "Jeff" Zhang, SE
California SE No. S5270

PAGE
E2.11

HANGER ROD DIAMETER = 3/8"	CABLE TRAY ALL-DIRECTIONAL TRAPEZE SEISMIC CABLE BRACING SYSTEM 20 PLF MAX	KIT OPTIONS TC0A

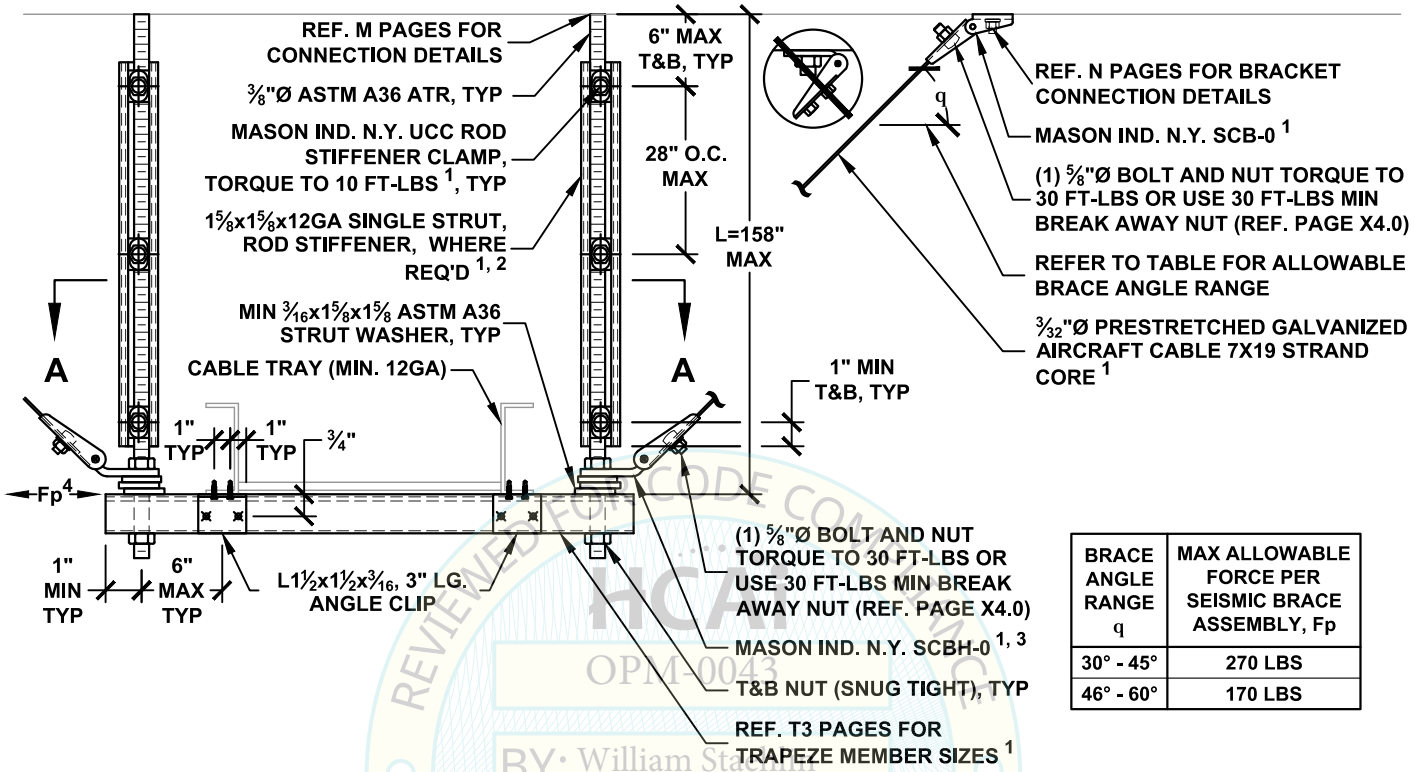

BRACE ANGLE RANGE q	MAX ALLOWABLE FORCE PER SEISMIC BRACE ASSEMBLY, Fp
30° - 45°	270 LBS
46° - 60°	170 LBS

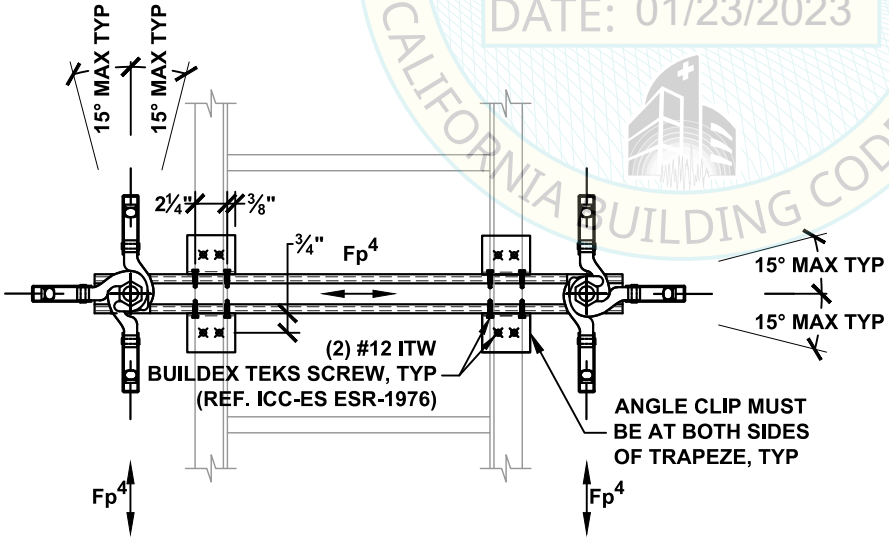

VIEW A-A

NOTES:

1. REF. SECTION A20 FOR GENERAL NOTES.
2. PROVIDE ROD STIFFENERS ONLY WHERE SEISMIC BRACKETS ARE ATTACHED TO THE ROD AND ROD LENGTH (L) EXCEEDS 18". REF. APPROPRIATE M10 PAGES FOR DETAIL.
3. REF. PAGE A25.0 FOR ALTERNATIVE ARRANGEMENTS OF SEISMIC BRACES.
4. DESIGN PROFESSIONAL SHALL CONSIDER ECCENTRIC LOAD DISTRIBUTION WHEN DETERMINING THE Fp VALUE USED IN DESIGN.
5. ITW BUILDEX TEKS SCREW ATTACHMENT TO CABLE TRAY MAY BE STAGGERED PROVIDED THAT THE 1" EDGE DISTANCE AND 1" SPACING IS SATISFIED.

REVIEWED FOR CODE COMPLIANCE
HCAI
OPM-0043
BY: William Staehlin
DATE: 01/23/2023
CALIFORNIA BUILDING CODE, 2022

MASON WEST
1601 E. Miraloma Ave. Placentia, CA 92870
TEL (714) 630 - 0701, www.masonwest.com

Jiefu "Jeff" Zhang, SE
California SE No. S5270

PAGE
E2.12

HANGER ROD DIAMETER = ½"	CABLE TRAY TRANSVERSE TRAPEZE SEISMIC CABLE BRACING SYSTEM 45 PLF MAX	KIT OPTIONS TC1T

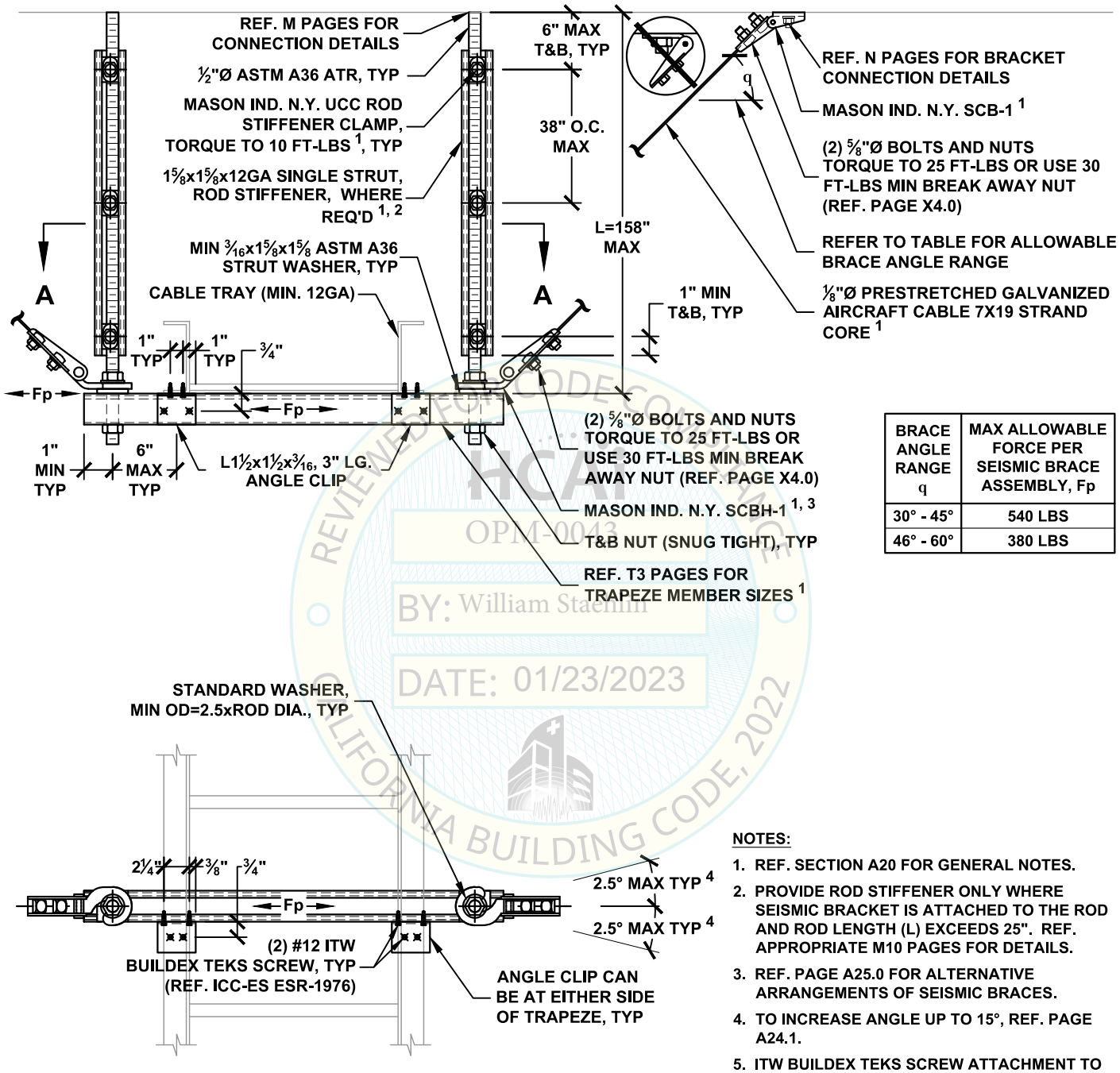

BRACE ANGLE RANGE q	MAX ALLOWABLE FORCE PER SEISMIC BRACE ASSEMBLY, Fp
30° - 45°	540 LBS
46° - 60°	380 LBS

VIEW A-A

NOTES:

1. REF. SECTION A20 FOR GENERAL NOTES.
2. PROVIDE ROD STIFFENER ONLY WHERE SEISMIC BRACKET IS ATTACHED TO THE ROD AND ROD LENGTH (L) EXCEEDS 25". REF. APPROPRIATE M10 PAGES FOR DETAILS.
3. REF. PAGE A25.0 FOR ALTERNATIVE ARRANGEMENTS OF SEISMIC BRACES.
4. TO INCREASE ANGLE UP TO 15°, REF. PAGE A24.1.
5. ITW BUILDEX TEKS SCREW ATTACHMENT TO CABLE TRAY MAY BE STAGGERED PROVIDED THAT THE 1" EDGE DISTANCE AND 1" SPACING IS SATISFIED.

REVIEWED FOR CODE COMPLIANCE
HCAI
OPM-0043
BY: William Staehlin
DATE: 01/23/2023
CALIFORNIA BUILDING CODE, 2022

MASON WEST
1601 E. Miraloma Ave. Placentia, CA 92870
TEL (714) 630 - 0701, www.masonwest.com

Jiefu "Jeff" Zhang, SE
California SE No. S5270

PAGE
E2.20

HANGER ROD DIAMETER = ½"	CABLE TRAY LONGITUDINAL TRAPEZE SEISMIC CABLE BRACING SYSTEM 45 PLF MAX	KIT OPTIONS TC1L

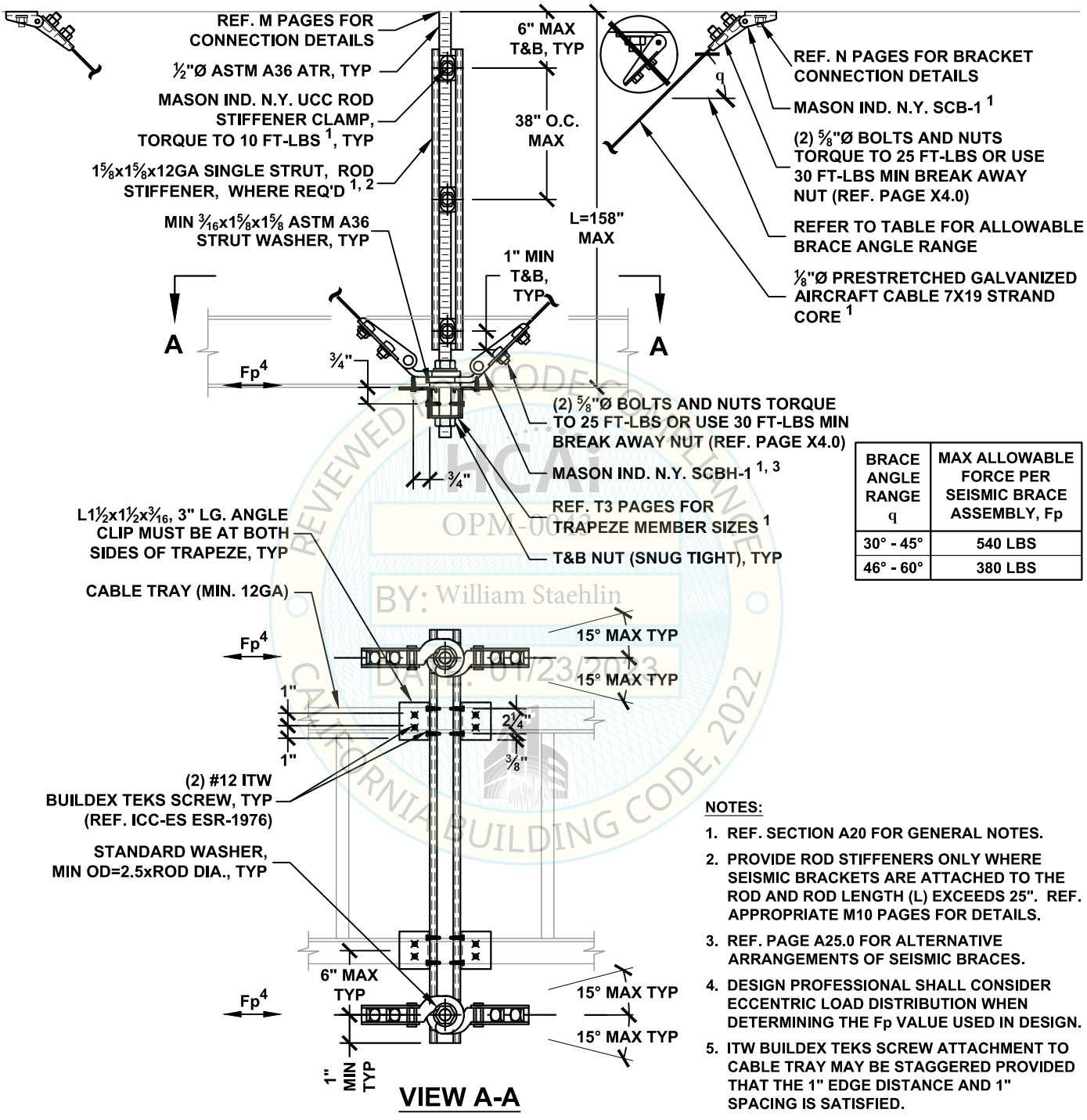

BRACE ANGLE RANGE q	MAX ALLOWABLE FORCE PER SEISMIC BRACE ASSEMBLY, Fp
30° - 45°	540 LBS
46° - 60°	380 LBS

NOTES:

1. REF. SECTION A20 FOR GENERAL NOTES.
2. PROVIDE ROD STIFFENERS ONLY WHERE SEISMIC BRACKETS ARE ATTACHED TO THE ROD AND ROD LENGTH (L) EXCEEDS 25". REF. APPROPRIATE M10 PAGES FOR DETAILS.
3. REF. PAGE A25.0 FOR ALTERNATIVE ARRANGEMENTS OF SEISMIC BRACES.
4. DESIGN PROFESSIONAL SHALL CONSIDER ECCENTRIC LOAD DISTRIBUTION WHEN DETERMINING THE Fp VALUE USED IN DESIGN.
5. ITW BUILDEX TEKS SCREW ATTACHMENT TO CABLE TRAY MAY BE STAGGERED PROVIDED THAT THE 1" EDGE DISTANCE AND 1" SPACING IS SATISFIED.

REVIEWED FOR CODE COMPLIANCE
HCAI
OPM-0043
BY: William Staehlin
DATE: 01/23/2023
CALIFORNIA BUILDING CODE, 2022

MASON WEST
1601 E. Miraloma Ave. Placentia, CA 92870
TEL (714) 630 - 0701, www.masonwest.com

Jiefu "Jeff" Zhang, SE
California SE No. S5270

HANGER ROD DIAMETER = ½"	CABLE TRAY ALL-DIRECTIONAL TRAPEZE SEISMIC CABLE BRACING SYSTEM 45 PLF MAX	KIT OPTIONS TC1A

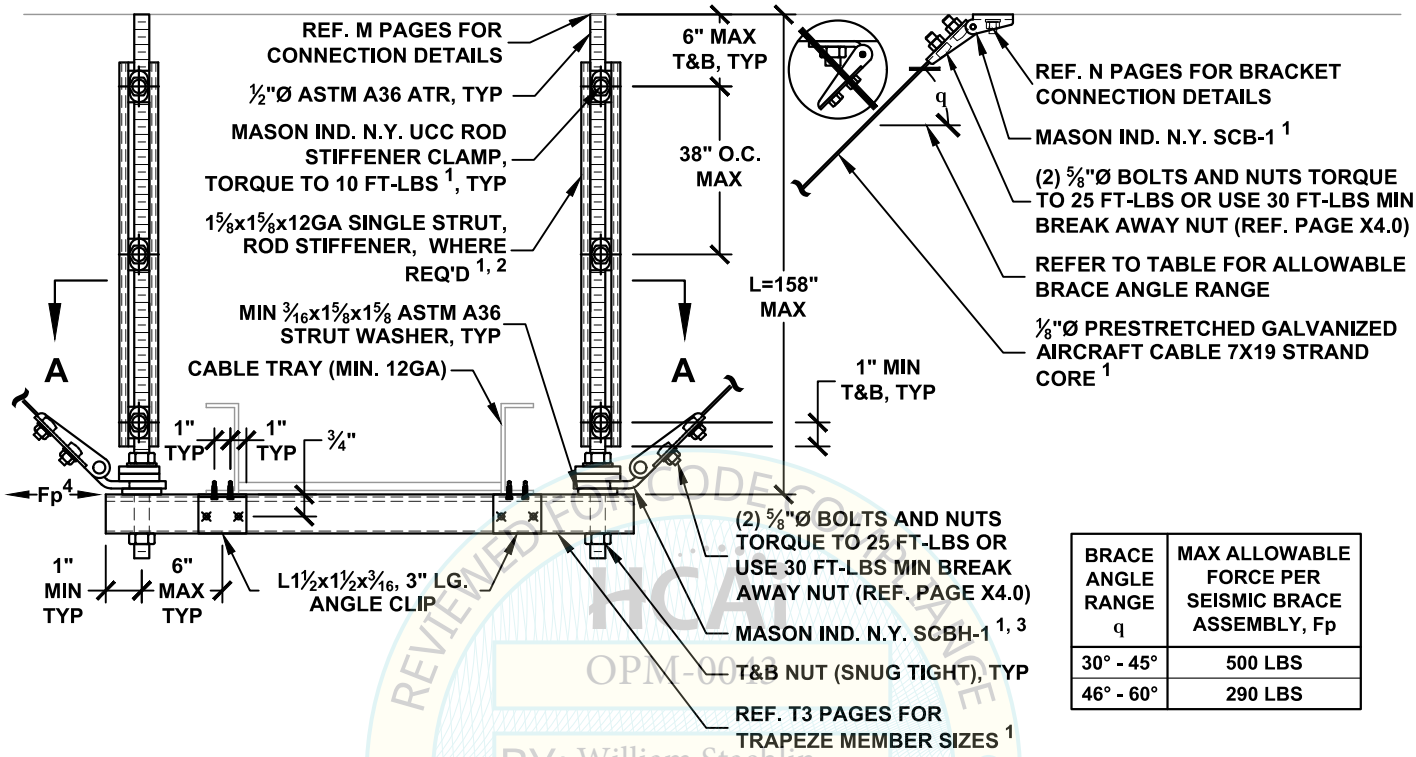

BRACE ANGLE RANGE q	MAX ALLOWABLE FORCE PER SEISMIC BRACE ASSEMBLY, Fp
30° - 45°	500 LBS
46° - 60°	290 LBS

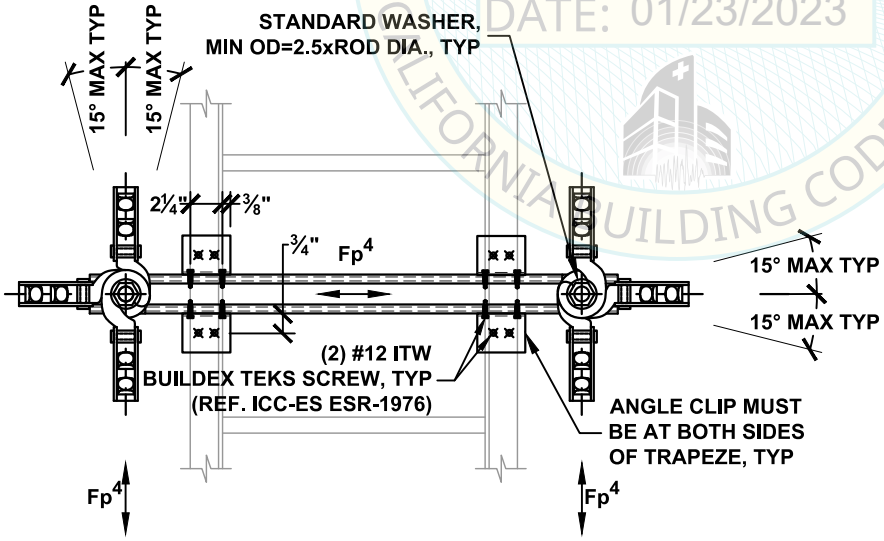

VIEW A-A

NOTES:

1. REF. SECTION A20 FOR GENERAL NOTES.
2. PROVIDE ROD STIFFENERS ONLY WHERE SEISMIC BRACKETS ARE ATTACHED TO THE ROD AND ROD LENGTH (L) EXCEEDS 25". REF. APPROPRIATE M10 PAGES FOR DETAILS.
3. REF. PAGE A25.0 FOR ALTERNATIVE ARRANGEMENTS OF SEISMIC BRACES.
4. DESIGN PROFESSIONAL SHALL CONSIDER ECCENTRIC LOAD DISTRIBUTION WHEN DETERMINING THE Fp VALUE USED IN DESIGN.
5. ITW BUILDEX TEKS SCREW ATTACHMENT TO CABLE TRAY MAY BE STAGGERED PROVIDED THAT THE 1" EDGE DISTANCE AND 1" SPACING IS SATISFIED.

HCAI
OPM-0043
BY: William Staehlin
DATE: 01/23/2023
REVIEWED FOR CODE COMPLIANCE
CALIFORNIA BUILDING CODE, 2022

MASON WEST
1601 E. Miraloma Ave. Placentia, CA 92870
TEL (714) 630 - 0701, www.masonwest.com

Jiefu "Jeff" Zhang, SE
California SE No. S5270

PAGE
E2.22

HANGER ROD DIAMETER = 5/8"	CABLE TRAY TRANSVERSE TRAPEZE SEISMIC CABLE BRACING SYSTEM 85 PLF MAX	KIT OPTIONS TC1T

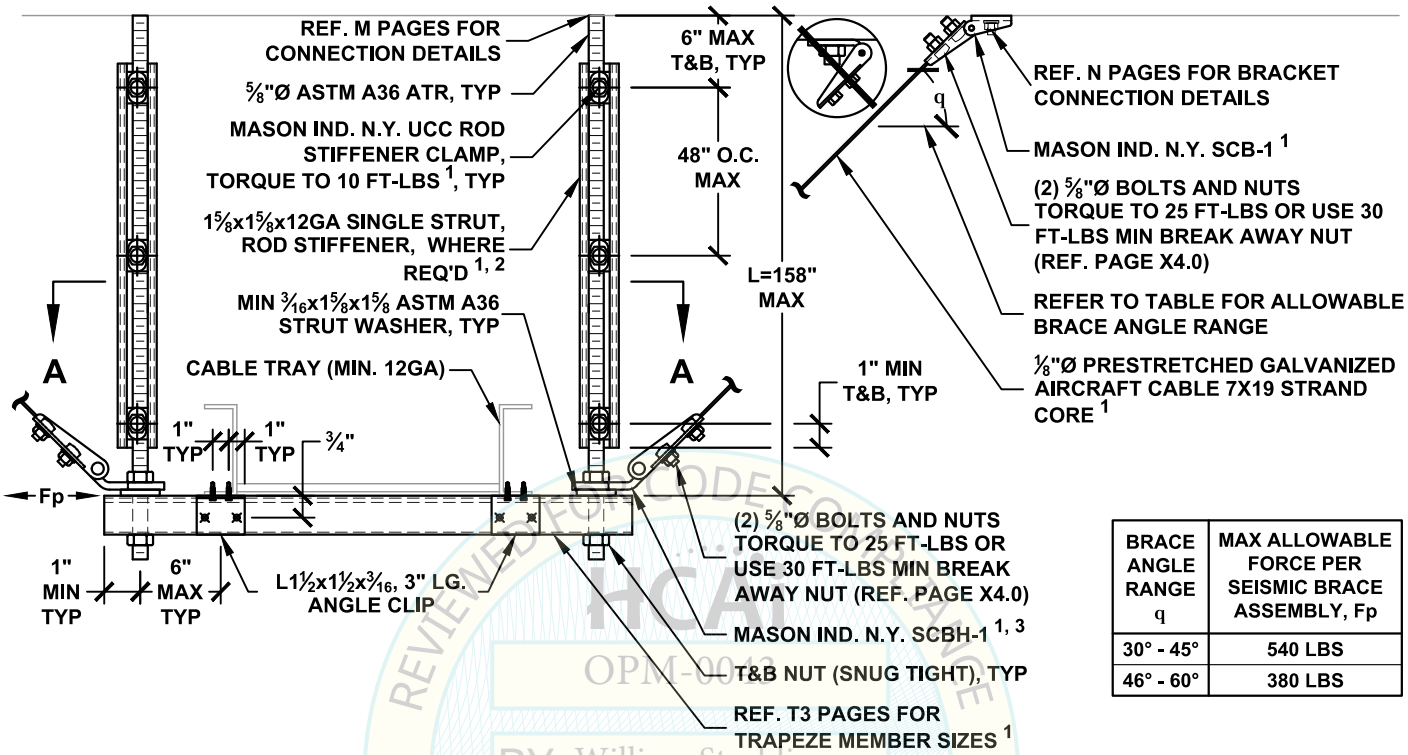

BRACE ANGLE RANGE q	MAX ALLOWABLE FORCE PER SEISMIC BRACE ASSEMBLY, Fp
30° - 45°	540 LBS
46° - 60°	380 LBS

REVIEWED FOR CODE COMPLIANCE
HCAI
OPM-0043
BY: William Staehlin
DATE: 01/23/2023
CALIFORNIA BUILDING CODE, 2022

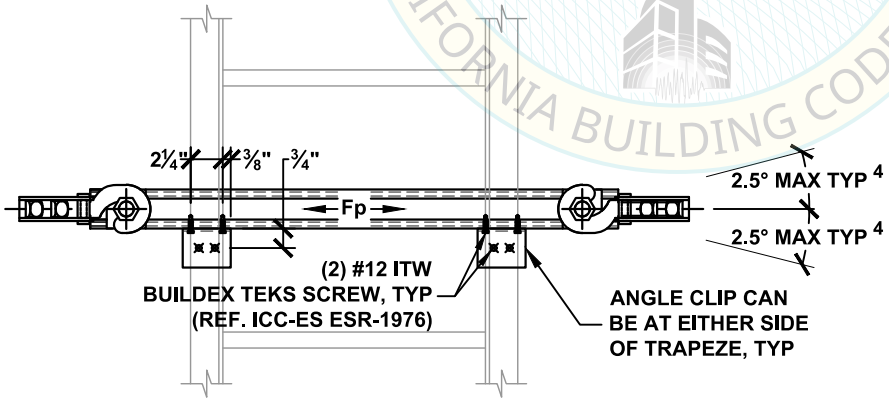

VIEW A-A

NOTES:

1. REF. SECTION A20 FOR GENERAL NOTES.
2. PROVIDE ROD STIFFENER ONLY WHERE SEISMIC BRACKET IS ATTACHED TO THE ROD AND ROD LENGTH (L) EXCEEDS 31". REF. APPROPRIATE M10 PAGES FOR DETAILS.
3. REF. PAGE A25.0 FOR ALTERNATIVE ARRANGEMENTS OF SEISMIC BRACES.
4. TO INCREASE ANGLE UP TO 15°, REF. PAGE A24.1.
5. ITW BUILDEX TEKS SCREW ATTACHMENT TO CABLE TRAY MAY BE STAGGERED PROVIDED THAT THE 1" EDGE DISTANCE AND 1" SPACING IS SATISFIED.

MASON WEST
1601 E. Miraloma Ave. Placentia, CA 92870
TEL (714) 630 - 0701, www.masonwest.com

Jiefu "Jeff" Zhang, SE
California SE No. S5270

PAGE
E2.30

HANGER ROD DIAMETER = 5/8"	CABLE TRAY LONGITUDINAL TRAPEZE SEISMIC CABLE BRACING SYSTEM 85 PLF MAX	KIT OPTIONS TC1L

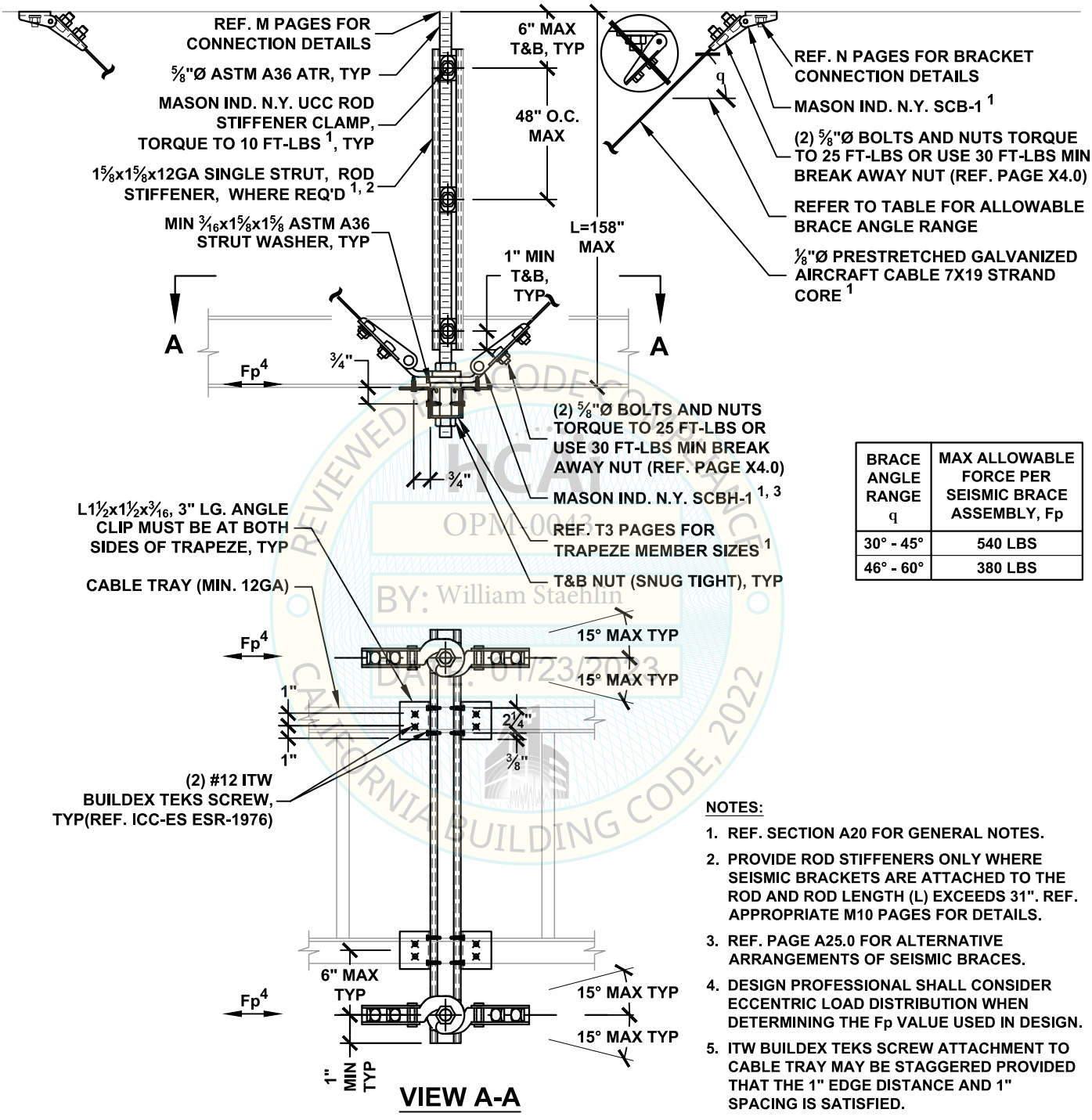

VIEW A-A

BRACE ANGLE RANGE q	MAX ALLOWABLE FORCE PER SEISMIC BRACE ASSEMBLY, Fp
30° - 45°	540 LBS
46° - 60°	380 LBS

NOTES:

1. REF. SECTION A20 FOR GENERAL NOTES.
2. PROVIDE ROD STIFFENERS ONLY WHERE SEISMIC BRACKETS ARE ATTACHED TO THE ROD AND ROD LENGTH (L) EXCEEDS 31". REF. APPROPRIATE M10 PAGES FOR DETAILS.
3. REF. PAGE A25.0 FOR ALTERNATIVE ARRANGEMENTS OF SEISMIC BRACES.
4. DESIGN PROFESSIONAL SHALL CONSIDER ECCENTRIC LOAD DISTRIBUTION WHEN DETERMINING THE Fp VALUE USED IN DESIGN.
5. ITW BUILDEX TEKS SCREW ATTACHMENT TO CABLE TRAY MAY BE STAGGERED PROVIDED THAT THE 1" EDGE DISTANCE AND 1" SPACING IS SATISFIED.

REVIEWED FOR CODE COMPLIANCE HCAI OPM-0043 BY: William Staehlin DATE: 01/23/2023 CALIFORNIA BUILDING CODE, 2022

MASON WEST
1601 E. Miraloma Ave. Placentia, CA 92870
TEL (714) 630 - 0701, www.masonwest.com

Jiefu "Jeff" Zhang, SE
California SE No. S5270

PAGE
E2.31

HANGER ROD DIAMETER = 5/8"	CABLE TRAY ALL-DIRECTIONAL TRAPEZE SEISMIC CABLE BRACING SYSTEM 85 PLF MAX	KIT OPTIONS TC1A

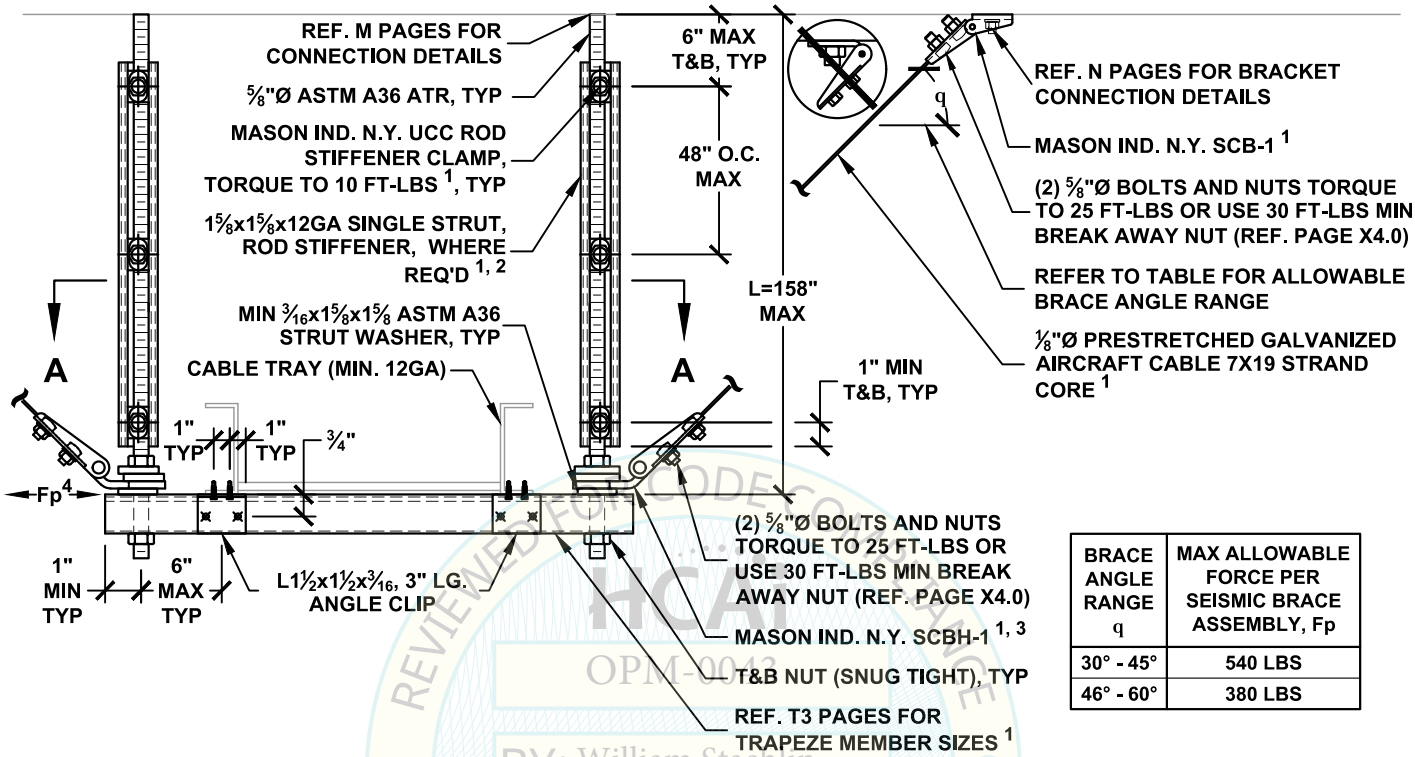

BRACE ANGLE RANGE q	MAX ALLOWABLE FORCE PER SEISMIC BRACE ASSEMBLY, Fp
30° - 45°	540 LBS
46° - 60°	380 LBS

REVIEWED FOR CODE COMPLIANCE
HCAI
OPM-0043
BY: William Staehlin
DATE: 01/23/2023
CALIFORNIA BUILDING CODE, 2022

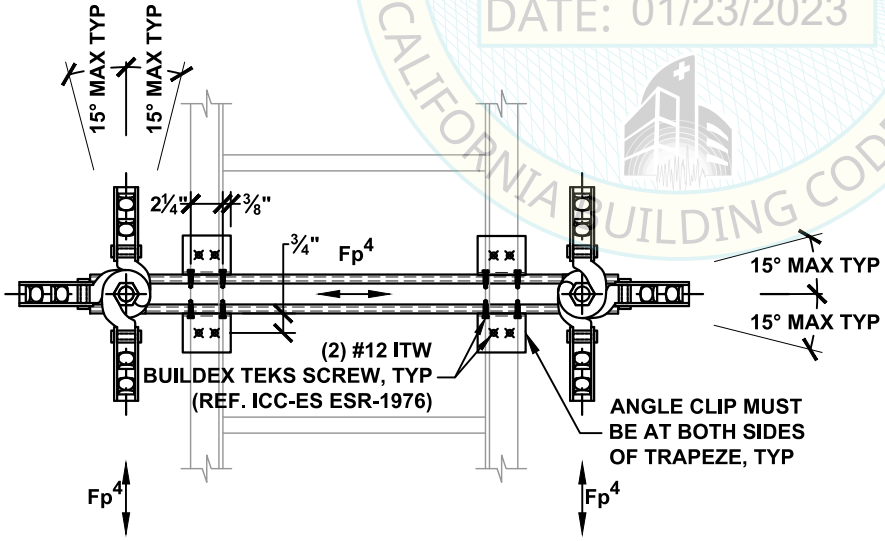

VIEW A-A

NOTES:

1. REF. SECTION A20 FOR GENERAL NOTES.
2. PROVIDE ROD STIFFENERS ONLY WHERE SEISMIC BRACKETS ARE ATTACHED TO THE ROD AND ROD LENGTH (L) EXCEEDS 31". REF. APPROPRIATE M10 PAGES FOR DETAILS
3. REF. PAGE A25.0 FOR ALTERNATIVE ARRANGEMENTS OF SEISMIC BRACES.
4. DESIGN PROFESSIONAL SHALL CONSIDER ECCENTRIC LOAD DISTRIBUTION WHEN DETERMINING THE Fp VALUE USED IN DESIGN.
5. ITW BUILDEX TEKS SCREW ATTACHMENT TO CABLE TRAY MAY BE STAGGERED PROVIDED THAT THE 1" EDGE DISTANCE AND 1" SPACING IS SATISFIED.

MASON WEST
1601 E. Miraloma Ave. Placentia, CA 92870
TEL (714) 630 - 0701, www.masonwest.com

Jiefu "Jeff" Zhang, SE
California SE No. S5270

PAGE
E2.32

HANGER ROD DIAMETER = ⅜"	CABLE TRAY X-PATTERN TRAPEZE SEISMIC CABLE BRACING SYSTEM 20 PLF MAX	KIT OPTIONS TC0X

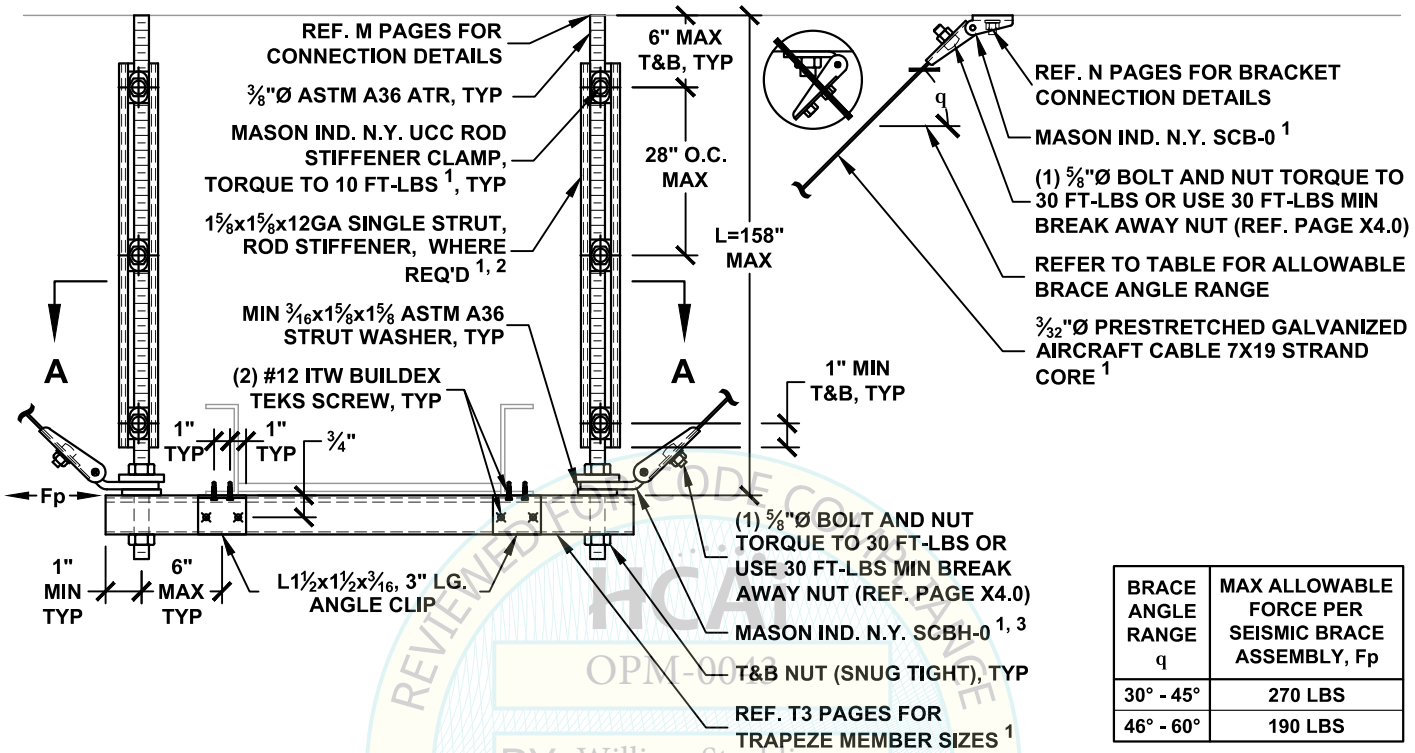

BRACE ANGLE RANGE q	MAX ALLOWABLE FORCE PER SEISMIC BRACE ASSEMBLY, Fp
30° - 45°	270 LBS
46° - 60°	190 LBS

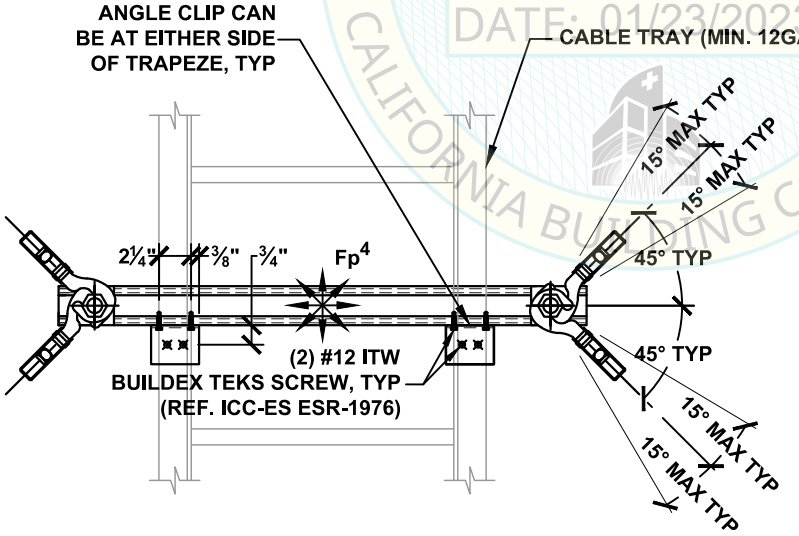

VIEW A-A

NOTES:

1. REF. SECTION A20 FOR GENERAL NOTES.
2. PROVIDE ROD STIFFENING ONLY WHERE SEISMIC BRACKETS ARE ATTACHED TO THE ROD AND ROD LENGTH (L) EXCEEDS 18". REF. APPROPRIATE M10 PAGES FOR DETAIL.
3. REF. PAGE A25.0 FOR ALTERNATE ARRANGEMENTS OF SEISMIC BRACES.
4. Fp SHALL BE A SINGLE LOAD APPLIED IN ANY HORIZONTAL DIRECTION. MULTIPLE ARROWS DO NOT SIGNIFY SIMULTANEOUS Fp LOADS ACTING AT ONE TIME. DESIGN PROFESSIONAL SHALL CONSIDER ECCENTRIC LOAD DISTRIBUTION WHEN DETERMINING THE Fp VALUE USED IN DESIGN.
5. ITW BUILDEX TEKS SCREW ATTACHMENT TO CABLE TRAY MAY BE STAGGERED PROVIDED THAT THE 1" EDGE DISTANCE AND 1" SPACING IS SATISFIED.

HCAI
OPM-0043
BY: William Staehlin
DATE: 01/23/2023
REVIEWED FOR CODE COMPLIANCE
CALIFORNIA BUILDING CODE 2022

MASON WEST
1601 E. Miraloma Ave. Placentia, CA 92870
TEL (714) 630 - 0701, www.masonwest.com

Jiefu "Jeff" Zhang, SE
California SE No. S5270

PAGE
E3.10

HANGER ROD DIAMETER = ½"	CABLE TRAY X-PATTERN TRAPEZE SEISMIC CABLE BRACING SYSTEM 45 PLF MAX	KIT OPTIONS TC1X

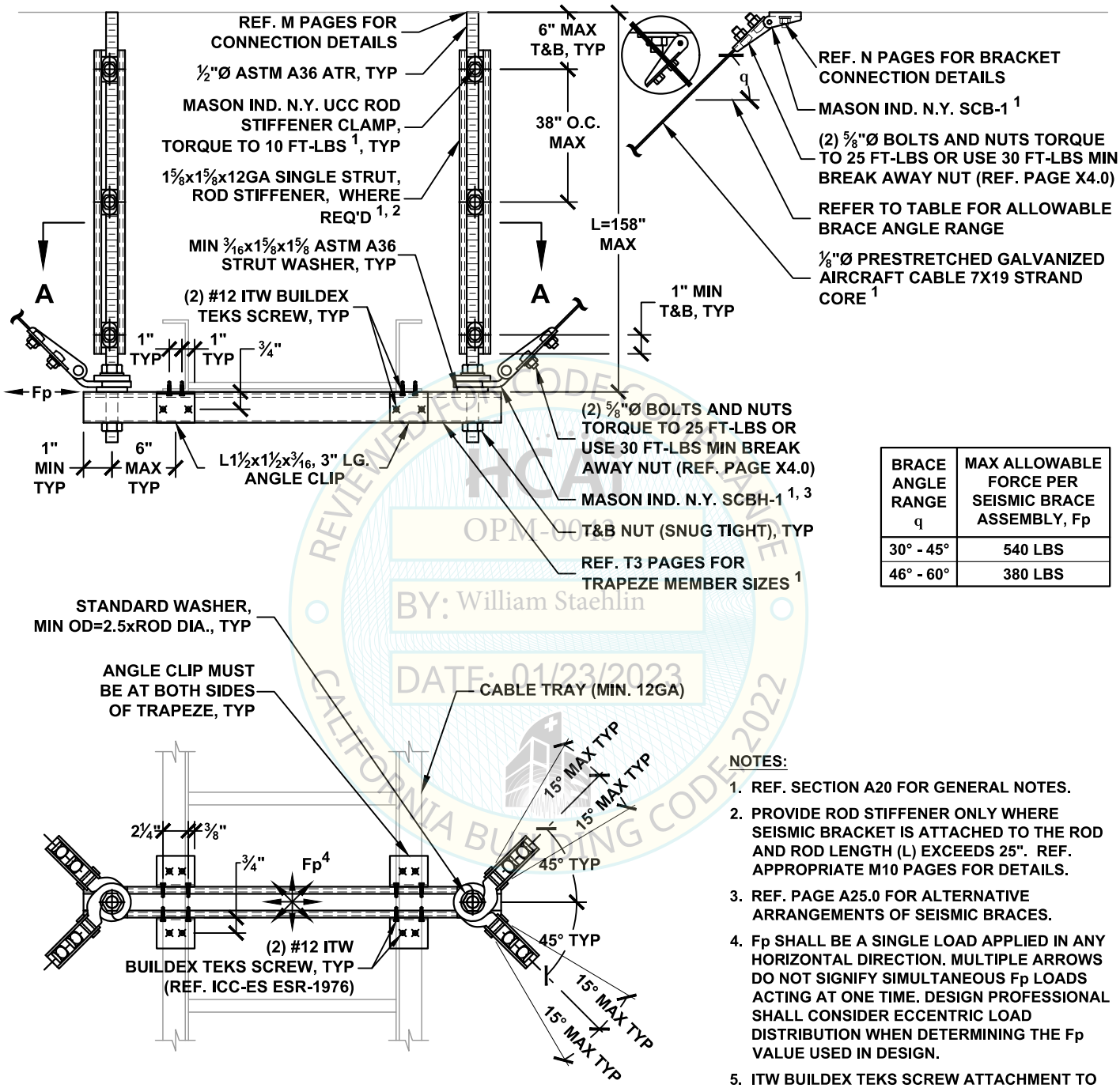

BRACE ANGLE RANGE q	MAX ALLOWABLE FORCE PER SEISMIC BRACE ASSEMBLY, Fp
30° - 45°	540 LBS
46° - 60°	380 LBS

VIEW A-A

NOTES:

1. REF. SECTION A20 FOR GENERAL NOTES.
2. PROVIDE ROD STIFFENER ONLY WHERE SEISMIC BRACKET IS ATTACHED TO THE ROD AND ROD LENGTH (L) EXCEEDS 25". REF. APPROPRIATE M10 PAGES FOR DETAILS.
3. REF. PAGE A25.0 FOR ALTERNATIVE ARRANGEMENTS OF SEISMIC BRACES.
4. Fp SHALL BE A SINGLE LOAD APPLIED IN ANY HORIZONTAL DIRECTION. MULTIPLE ARROWS DO NOT SIGNIFY SIMULTANEOUS Fp LOADS ACTING AT ONE TIME. DESIGN PROFESSIONAL SHALL CONSIDER ECCENTRIC LOAD DISTRIBUTION WHEN DETERMINING THE Fp VALUE USED IN DESIGN.
5. ITW BUILDEX TEKS SCREW ATTACHMENT TO CABLE TRAY MAY BE STAGGERED PROVIDED THAT THE 1" EDGE DISTANCE AND 1" SPACING IS SATISFIED.

REVIEWED FOR CODE COMPLIANCE
HCAI
OPM-0043
BY: William Staehlin
DATE: 01/23/2023
CALIFORNIA BUILDING CODE 2022

MASON WEST
1601 E. Miraloma Ave. Placentia, CA 92870
TEL (714) 630 - 0701, www.masonwest.com

Jiefu "Jeff" Zhang, SE
California SE No. S5270

HANGER ROD DIAMETER = 5/8"	CABLE TRAY X-PATTERN TRAPEZE SEISMIC CABLE BRACING SYSTEM 85 PLF MAX	KIT OPTIONS TC1X

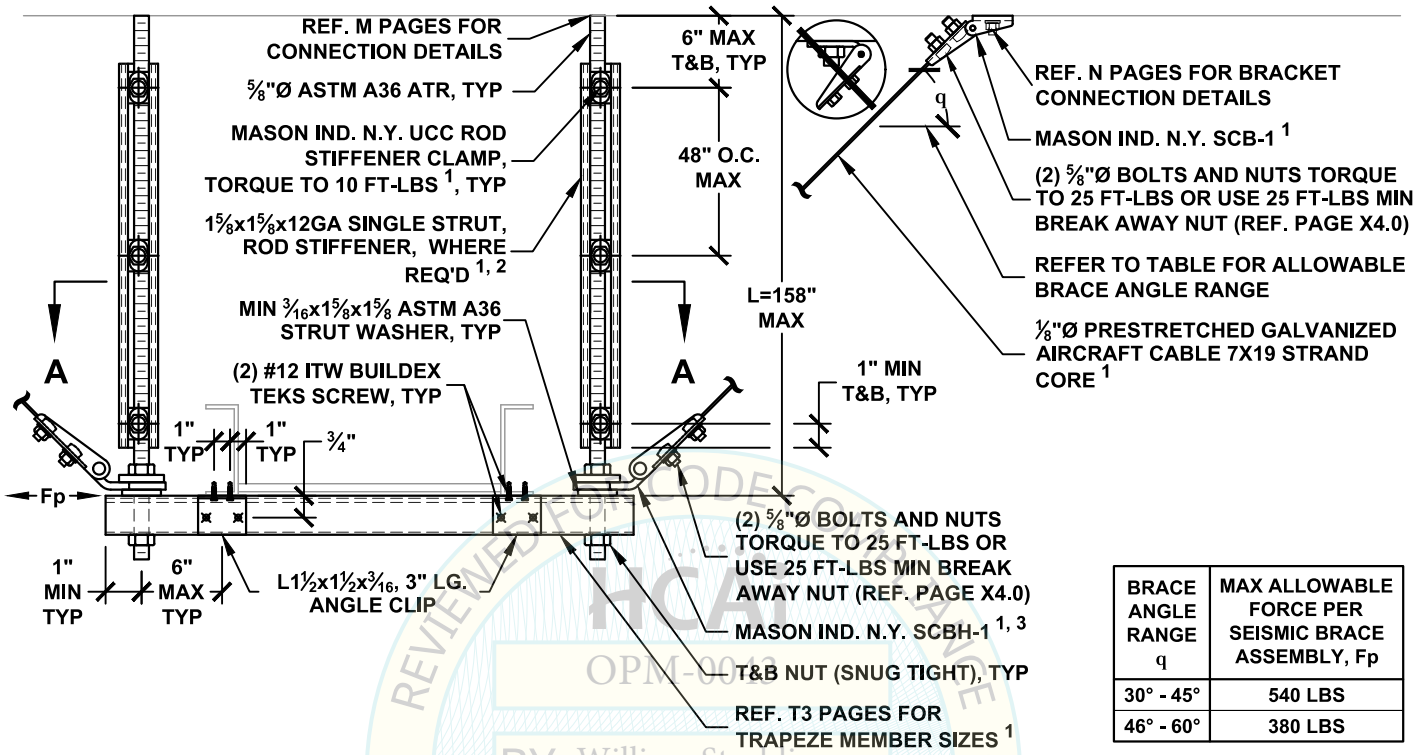

BRACE ANGLE RANGE q	MAX ALLOWABLE FORCE PER SEISMIC BRACE ASSEMBLY, Fp
30° - 45°	540 LBS
46° - 60°	380 LBS

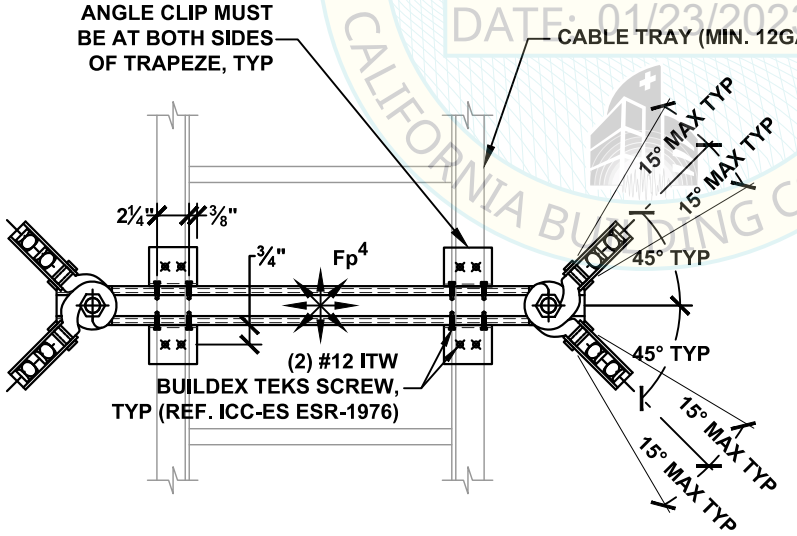

VIEW A-A

NOTES:

1. REF. SECTION A20 FOR GENERAL NOTES.
2. PROVIDE ROD STIFFENER ONLY WHERE SEISMIC BRACKET IS ATTACHED TO THE ROD AND ROD LENGTH (L) EXCEEDS 31". REF. APPROPRIATE M10 PAGES FOR DETAILS.
3. REF. PAGE A25.0 FOR ALTERNATIVE ARRANGEMENTS OF SEISMIC BRACES.
4. Fp SHALL BE A SINGLE LOAD APPLIED IN ANY HORIZONTAL DIRECTION. MULTIPLE ARROWS DO NOT SIGNIFY SIMULTANEOUS Fp LOADS ACTING AT ONE TIME. DESIGN PROFESSIONAL SHALL CONSIDER ECCENTRIC LOAD DISTRIBUTION WHEN DETERMINING THE Fp VALUE USED IN DESIGN.
5. ITW BUILDEX TEKS SCREW ATTACHMENT TO CABLE TRAY MAY BE STAGGERED PROVIDED THAT THE 1" EDGE DISTANCE AND 1" SPACING IS SATISFIED.

HCAI REVIEWED FOR CODE COMPLIANCE OPM-0043 BY: William Staehlin DATE: 01/23/2023 CALIFORNIA BUILDING CODE 2022

MASON WEST
1601 E. Miraloma Ave. Placentia, CA 92870
TEL (714) 630 - 0701, www.masonwest.com

Jiefu "Jeff" Zhang, SE
California SE No. S5270

PAGE
E3.12

HANGER ROD DIAMETER = ⅜"

CABLE TRAY TRANSVERSE TRAPEZE SEISMIC SOLID BRACING SYSTEM 20 PLF MAX

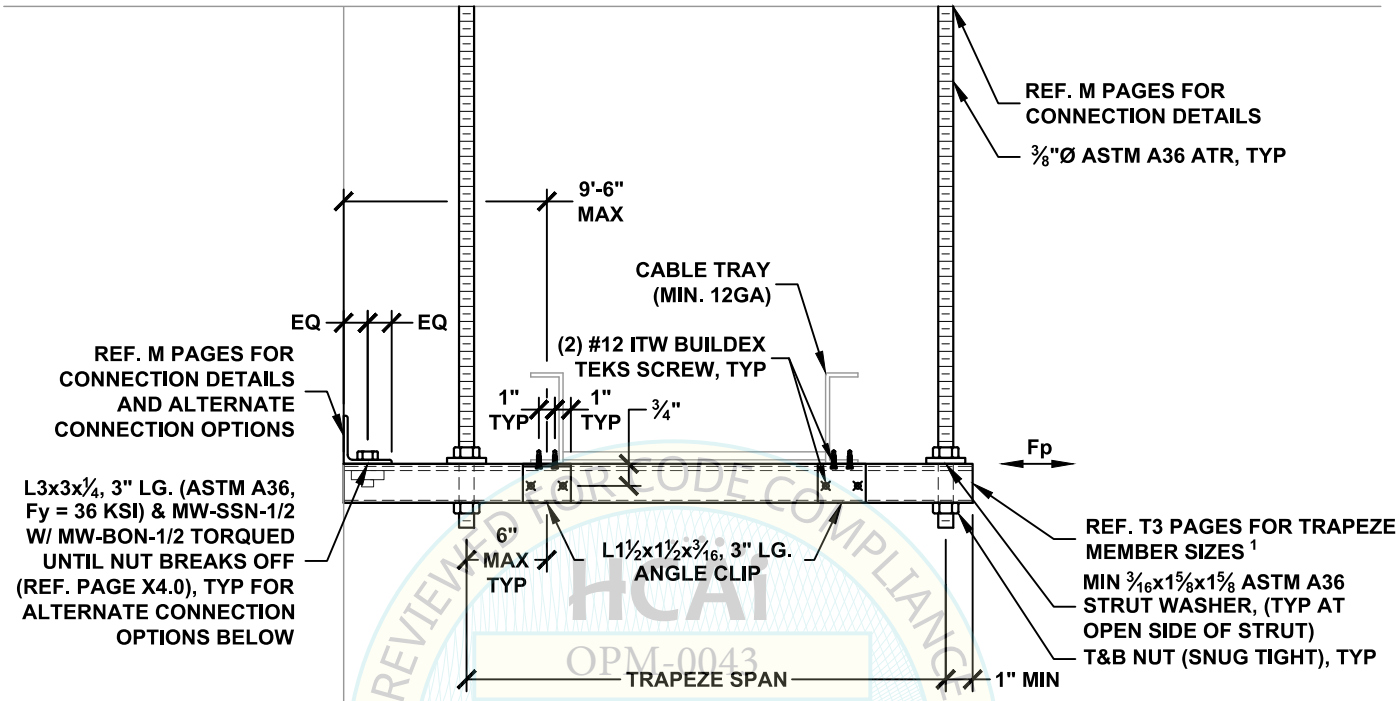

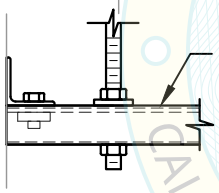

OPTION 1: SINGLE STRUT TRAPEZE

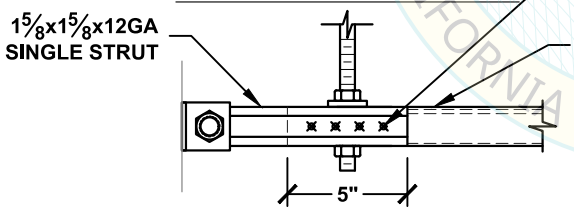

OPTION 2: SINGLE STRUT TRAPEZE

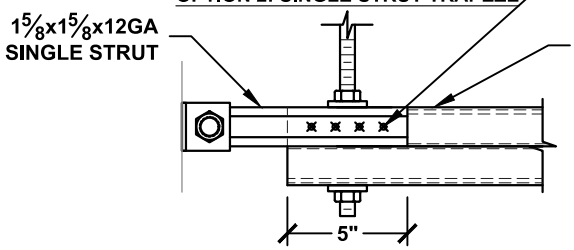

OPTION 3: DOUBLE STRUT TRAPEZE

MAX ALLOWABLE FORCE PER SEISMIC BRACE ASSEMBLY, Fp
670 LBS

NOTES:

1. TRAPEZE MEMBER MAY BE PROVIDED WITH ROUND HOLES SIZED FOR HANGER RODS. REF. X7.0 & X7.1 FOR STRUT MEMBER DATA.
2. SEPARATE LONGITUDINAL BRACING SHALL BE PROVIDED FOR THE CABLE TRAY RUN AS DISCUSSED IN SECTION A20.
3. ITW BUILDEX TEKS SCREW ATTACHMENT TO CABLE TRAY MAY BE STAGGERED PROVIDED THAT THE 1" EDGE DISTANCE AND 1" SPACING IS SATISFIED.

REVIEWED FOR CODE COMPLIANCE
HCAI
OPM-0043
BY: William Staehlin
DATE: 01/23/2023
CALIFORNIA BUILDING CODE, 2022

MASON WEST
1601 E. Miraloma Ave. Placentia, CA 92870
TEL (714) 630 - 0701, www.masonwest.com

Jiefu "Jeff" Zhang, SE
California SE No. S5270

PAGE
E4.10

HANGER ROD DIAMETER = 3/8"	CABLE TRAY ALL-DIRECTIONAL TRAPEZE SEISMIC SOLID BRACING SYSTEM 20 PLF MAX	KIT OPTIONS TS12L TS1220L TSH312L TSH320L

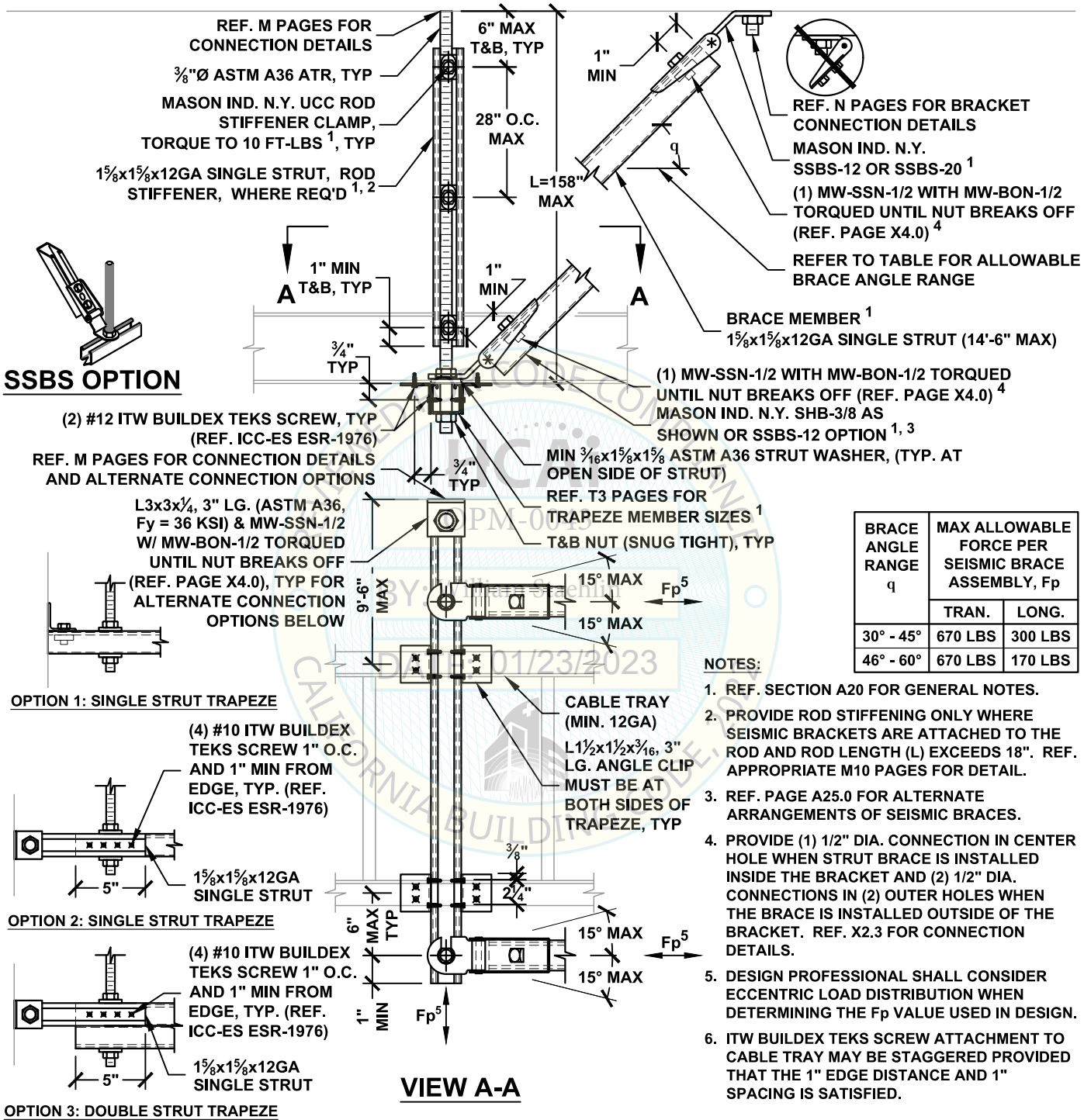

BRACE ANGLE RANGE q	MAX ALLOWABLE FORCE PER SEISMIC BRACE ASSEMBLY, Fp	
	TRAN.	LONG.
30° - 45°	670 LBS	300 LBS
46° - 60°	670 LBS	170 LBS

NOTES:

1. REF. SECTION A20 FOR GENERAL NOTES.
2. PROVIDE ROD STIFFENING ONLY WHERE SEISMIC BRACKETS ARE ATTACHED TO THE ROD AND ROD LENGTH (L) EXCEEDS 18". REF. APPROPRIATE M10 PAGES FOR DETAIL.
3. REF. PAGE A25.0 FOR ALTERNATE ARRANGEMENTS OF SEISMIC BRACES.
4. PROVIDE (1) 1/2" DIA. CONNECTION IN CENTER HOLE WHEN STRUT BRACE IS INSTALLED INSIDE THE BRACKET AND (2) 1/2" DIA. CONNECTIONS IN (2) OUTER HOLES WHEN THE BRACE IS INSTALLED OUTSIDE OF THE BRACKET. REF. X2.3 FOR CONNECTION DETAILS.
5. DESIGN PROFESSIONAL SHALL CONSIDER ECCENTRIC LOAD DISTRIBUTION WHEN DETERMINING THE Fp VALUE USED IN DESIGN.
6. ITW BUILDEX TEKS SCREW ATTACHMENT TO CABLE TRAY MAY BE STAGGERED PROVIDED THAT THE 1" EDGE DISTANCE AND 1" SPACING IS SATISFIED.

ICC-ES CODE COMPLIANCE
OPM-0043
DATE: 01/23/2023
CALIFORNIA BUILDING CODE

MASON WEST
1601 E. Miraloma Ave. Placentia, CA 92870
TEL (714) 630 - 0701, www.masonwest.com

Jiefu "Jeff" Zhang, SE
California SE No. S5270

PAGE
E4.12

HANGER ROD DIAMETER = ½"	CABLE TRAY TRANSVERSE TRAPEZE SEISMIC SOLID BRACING SYSTEM 45 PLF MAX	

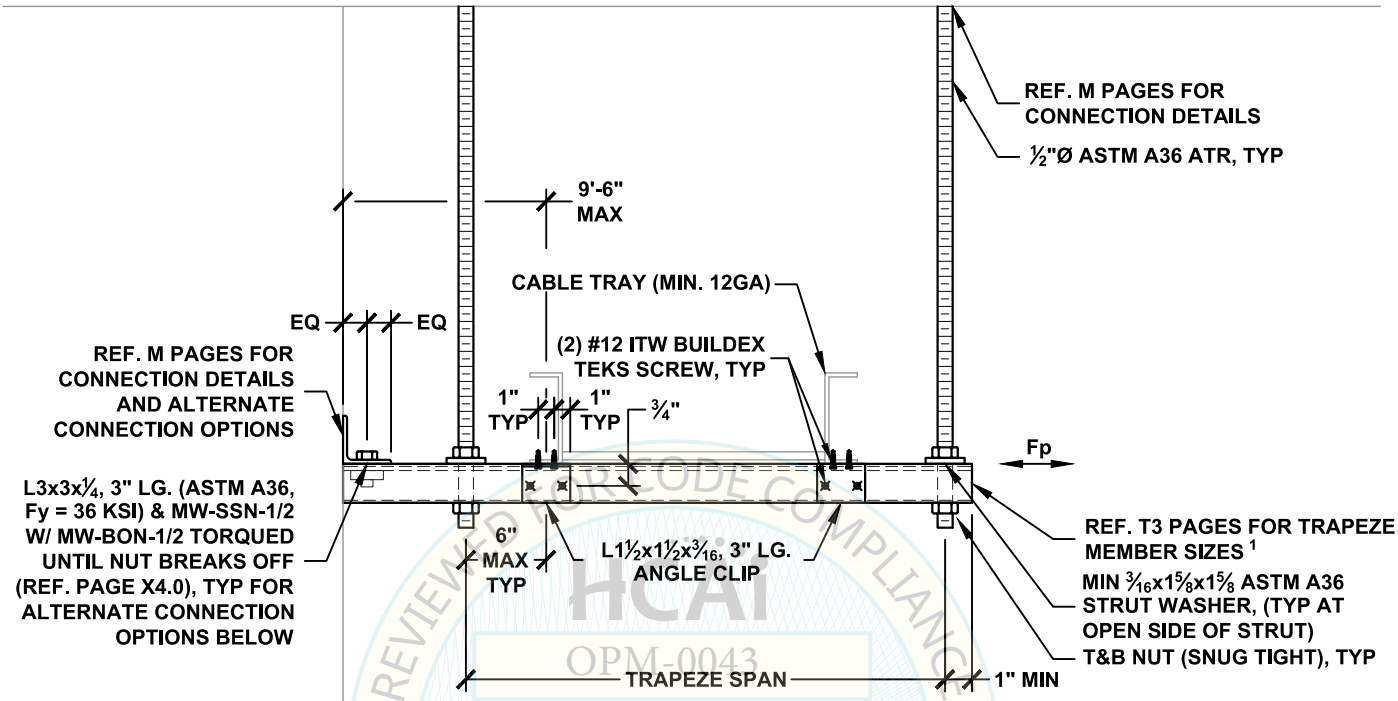

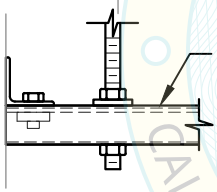

OPTION 1: SINGLE STRUT TRAPEZE

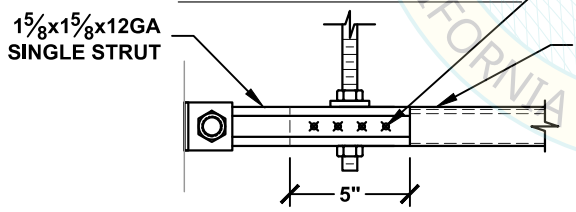

OPTION 2: SINGLE STRUT TRAPEZE

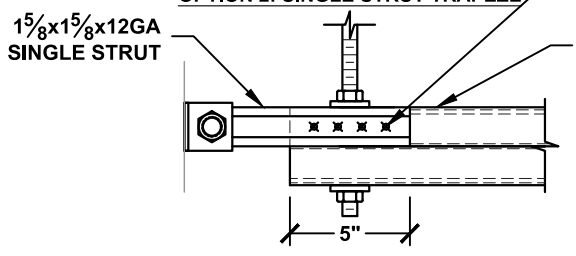

OPTION 3: DOUBLE STRUT TRAPEZE

MAX ALLOWABLE FORCE PER SEISMIC BRACE ASSEMBLY, Fp
670 LBS

NOTES:

1. TRAPEZE MEMBER MAY BE PROVIDED WITH ROUND HOLES SIZED FOR HANGER RODS. REF. X7.0 & X7.1 FOR STRUT MEMBER DATA.
2. SEPARATE LONGITUDINAL BRACING SHALL BE PROVIDED FOR THE CABLE TRAY RUN AS DISCUSSED IN SECTION A20.
3. ITW BUILDEX TEKS SCREW ATTACHMENT TO CABLE TRAY MAY BE STAGGERED PROVIDED THAT THE 1" EDGE DISTANCE AND 1" SPACING IS SATISFIED.

HCAI
OPM-0043
BY: William Staehlin
DATE: 01/23/2023
REVIEWED FOR CODE COMPLIANCE
CALIFORNIA BUILDING CODE, 2022

MASON WEST
1601 E. Miraloma Ave. Placentia, CA 92870
TEL (714) 630 - 0701, www.masonwest.com

Jiefu "Jeff" Zhang, SE
California SE No. S5270

HANGER ROD DIAMETER = ½"	CABLE TRAY ALL-DIRECTIONAL TRAPEZE SEISMIC SOLID BRACING SYSTEM 45 PLF MAX	KIT OPTIONS TS12L TS1220L TSH412L TSH420L

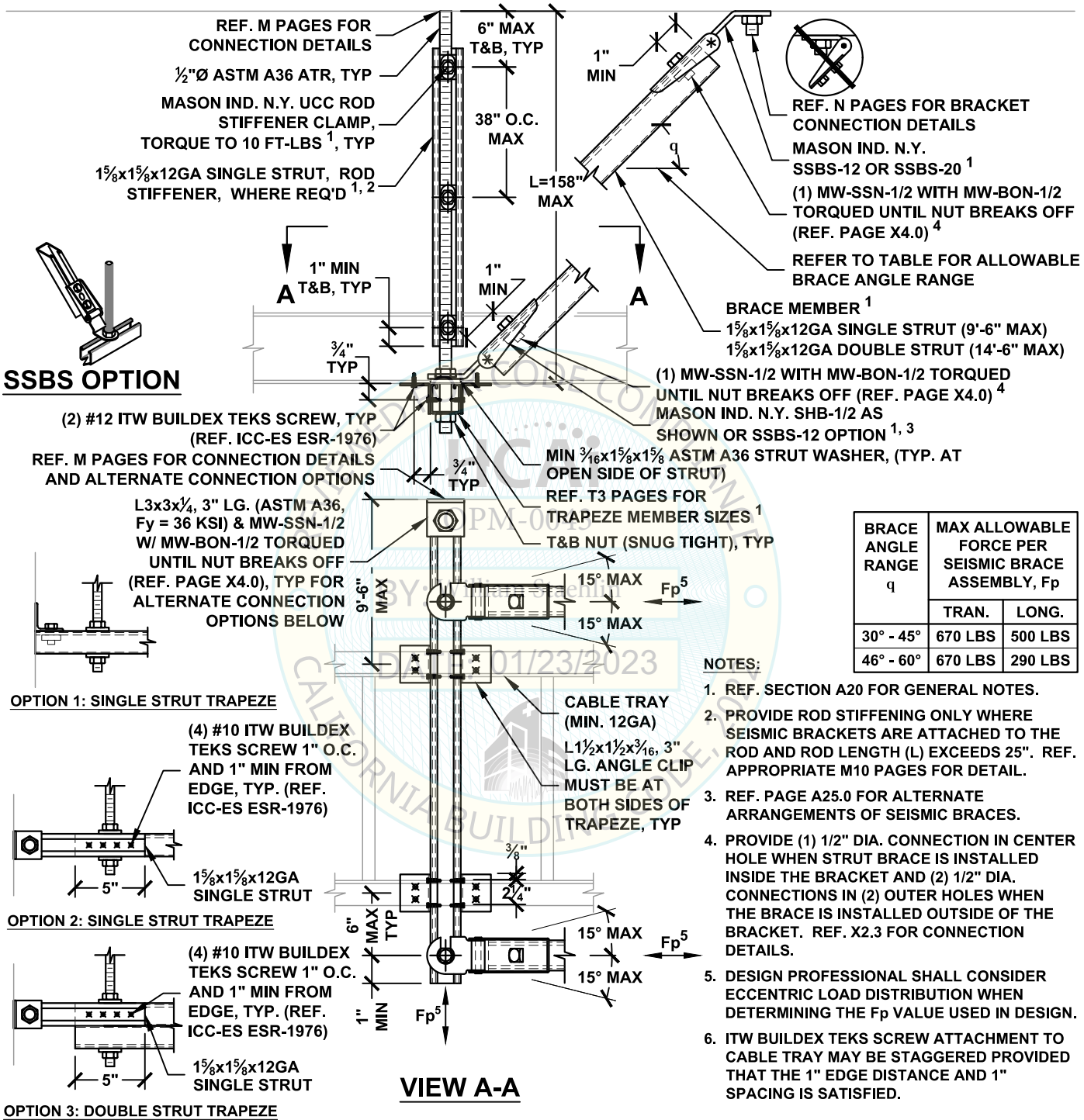

BRACE ANGLE RANGE q	MAX ALLOWABLE FORCE PER SEISMIC BRACE ASSEMBLY, Fp	
	TRAN.	LONG.
30° - 45°	670 LBS	500 LBS
46° - 60°	670 LBS	290 LBS

NOTES:

1. REF. SECTION A20 FOR GENERAL NOTES.
2. PROVIDE ROD STIFFENING ONLY WHERE SEISMIC BRACKETS ARE ATTACHED TO THE ROD AND ROD LENGTH (L) EXCEEDS 25". REF. APPROPRIATE M10 PAGES FOR DETAIL.
3. REF. PAGE A25.0 FOR ALTERNATE ARRANGEMENTS OF SEISMIC BRACES.
4. PROVIDE (1) 1/2" DIA. CONNECTION IN CENTER HOLE WHEN STRUT BRACE IS INSTALLED INSIDE THE BRACKET AND (2) 1/2" DIA. CONNECTIONS IN (2) OUTER HOLES WHEN THE BRACE IS INSTALLED OUTSIDE OF THE BRACKET. REF. X2.3 FOR CONNECTION DETAILS.
5. DESIGN PROFESSIONAL SHALL CONSIDER ECCENTRIC LOAD DISTRIBUTION WHEN DETERMINING THE Fp VALUE USED IN DESIGN.
6. ITW BUILDEX TEKS SCREW ATTACHMENT TO CABLE TRAY MAY BE STAGGERED PROVIDED THAT THE 1" EDGE DISTANCE AND 1" SPACING IS SATISFIED.

MASON WEST
1601 E. Miraloma Ave. Placentia, CA 92870
TEL (714) 630 - 0701, www.masonwest.com

Jiefu "Jeff" Zhang, SE
California SE No. S5270

PAGE
E4.22

ICC-ES CODE COMPLIANCE
OPM-0043
BY William Staehlin
DATED 01/23/2023
CALIFORNIA BUILDING CODE

HANGER ROD DIAMETER = 5/8"

CABLE TRAY TRANSVERSE TRAPEZE SEISMIC SOLID BRACING SYSTEM 85 PLF MAX

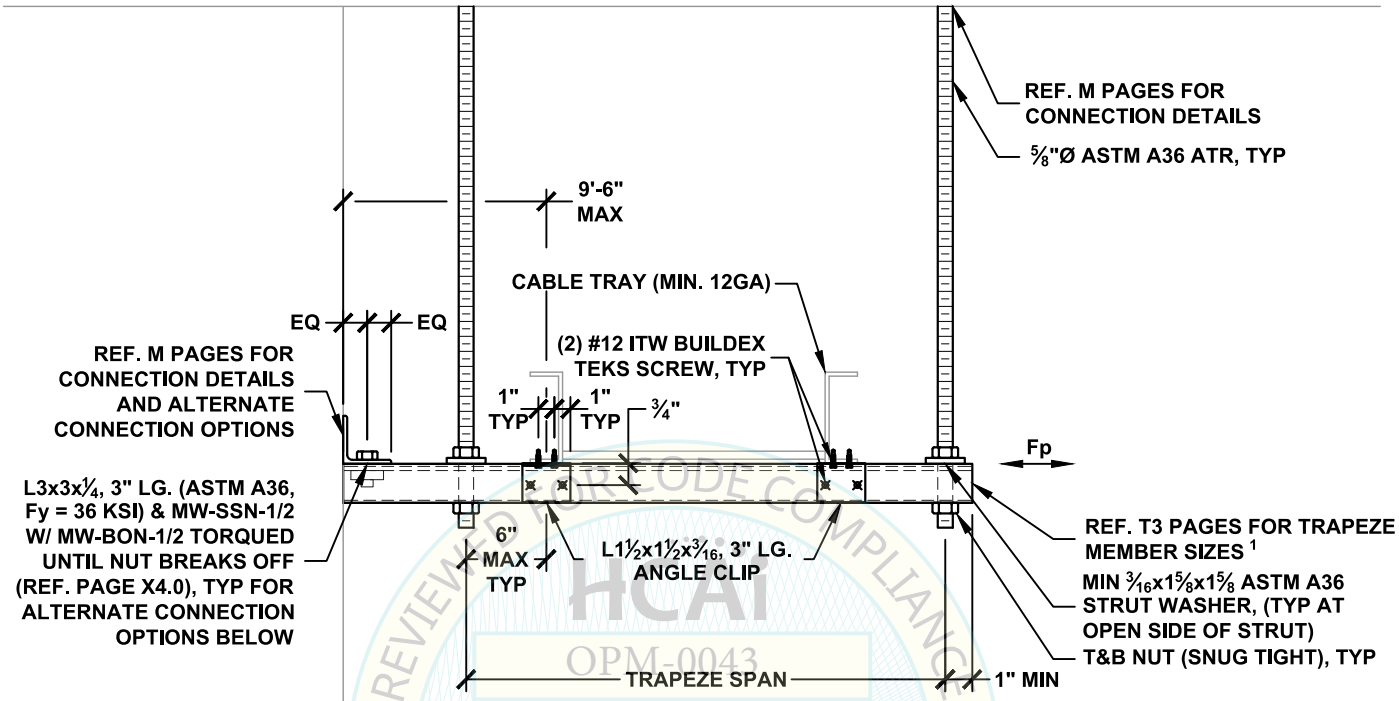

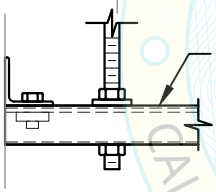

OPTION 1: SINGLE STRUT TRAPEZE

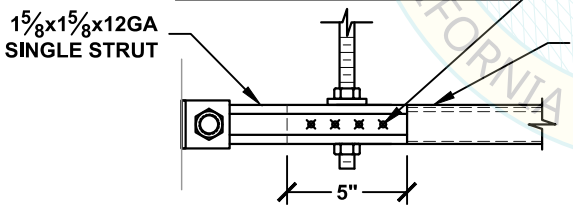

OPTION 2: SINGLE STRUT TRAPEZE

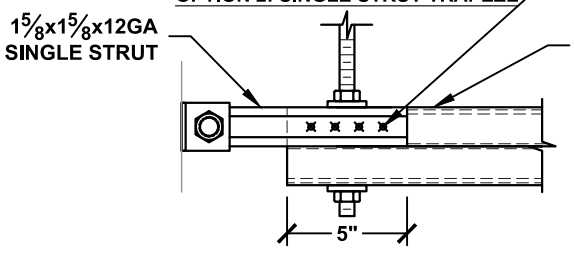

OPTION 3: DOUBLE STRUT TRAPEZE

MAX ALLOWABLE FORCE PER SEISMIC BRACE ASSEMBLY, Fp
670 LBS

NOTES:

1. TRAPEZE MEMBER MAY BE PROVIDED WITH ROUND HOLES SIZED FOR HANGER RODS. REF. X7.0 & X7.1 FOR STRUT MEMBER DATA.
2. SEPARATE LONGITUDINAL BRACING SHALL BE PROVIDED FOR THE CABLE TRAY RUN AS DISCUSSED IN SECTION A20.
3. ITW BUILDEX TEKS SCREW ATTACHMENT TO CABLE TRAY MAY BE STAGGERED PROVIDED THAT THE 1" EDGE DISTANCE AND 1" SPACING IS SATISFIED.

HCAI
OPM-0043
BY: William Staehlin
DATE: 01/23/2023
REVIEWED FOR CODE COMPLIANCE
CALIFORNIA BUILDING CODE, 2022

MASON WEST
1601 E. Miraloma Ave. Placentia, CA 92870
TEL (714) 630 - 0701, www.masonwest.com

Jiefu "Jeff" Zhang, SE
California SE No. S5270

HANGER ROD DIAMETER = 5/8"	CABLE TRAY ALL-DIRECTIONAL TRAPEZE SEISMIC SOLID BRACING SYSTEM 85 PLF MAX	KIT OPTIONS TS20L TSH520L

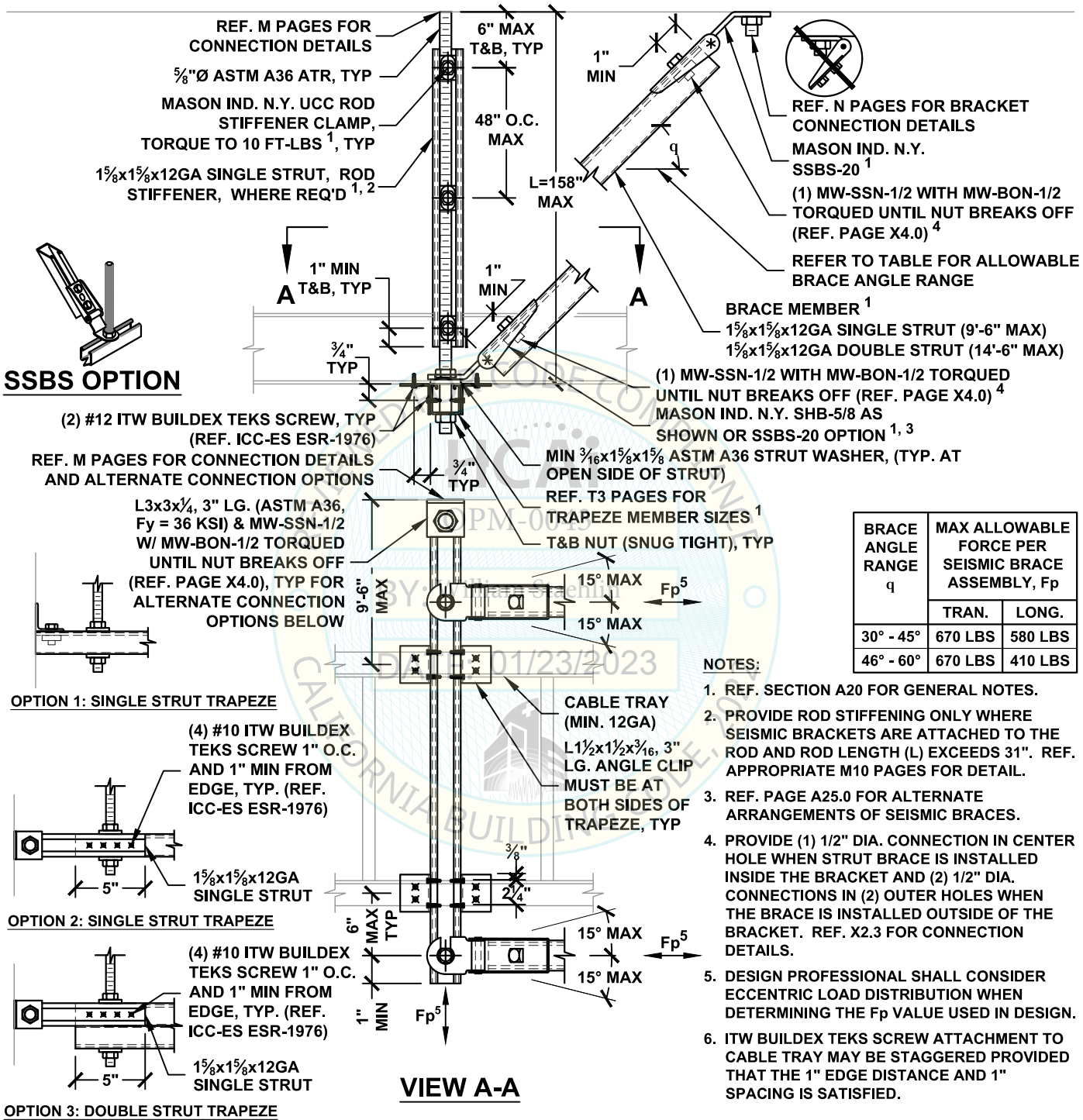

BRACE ANGLE RANGE q	MAX ALLOWABLE FORCE PER SEISMIC BRACE ASSEMBLY, Fp	
	TRAN.	LONG.
30° - 45°	670 LBS	580 LBS
46° - 60°	670 LBS	410 LBS

NOTES:

1. REF. SECTION A20 FOR GENERAL NOTES.
2. PROVIDE ROD STIFFENING ONLY WHERE SEISMIC BRACKETS ARE ATTACHED TO THE ROD AND ROD LENGTH (L) EXCEEDS 31". REF. APPROPRIATE M10 PAGES FOR DETAIL.
3. REF. PAGE A25.0 FOR ALTERNATE ARRANGEMENTS OF SEISMIC BRACES.
4. PROVIDE (1) 1/2" DIA. CONNECTION IN CENTER HOLE WHEN STRUT BRACE IS INSTALLED INSIDE THE BRACKET AND (2) 1/2" DIA. CONNECTIONS IN (2) OUTER HOLES WHEN THE BRACE IS INSTALLED OUTSIDE OF THE BRACKET. REF. X2.3 FOR CONNECTION DETAILS.
5. DESIGN PROFESSIONAL SHALL CONSIDER ECCENTRIC LOAD DISTRIBUTION WHEN DETERMINING THE Fp VALUE USED IN DESIGN.
6. ITW BUILDEX TEKS SCREW ATTACHMENT TO CABLE TRAY MAY BE STAGGERED PROVIDED THAT THE 1" EDGE DISTANCE AND 1" SPACING IS SATISFIED.

ICC-ES CODE COMPLIANCE
OPM-0043
DATE: 01/23/2023
CALIFORNIA BUILDING CODE

MASON WEST
1601 E. Miraloma Ave. Placentia, CA 92870
TEL (714) 630 - 0701, www.masonwest.com

Jiefu "Jeff" Zhang, SE
California SE No. S5270

PAGE
E4.32

HANGER ROD DIAMETER = ⅜"

PIPING/CONDUIT TRANSVERSE TRAPEZE SEISMIC SOLID BRACING SYSTEM 30 PLF MAX

KIT OPTIONS
TS12T
TS1220T
TSH312T
TSH320T

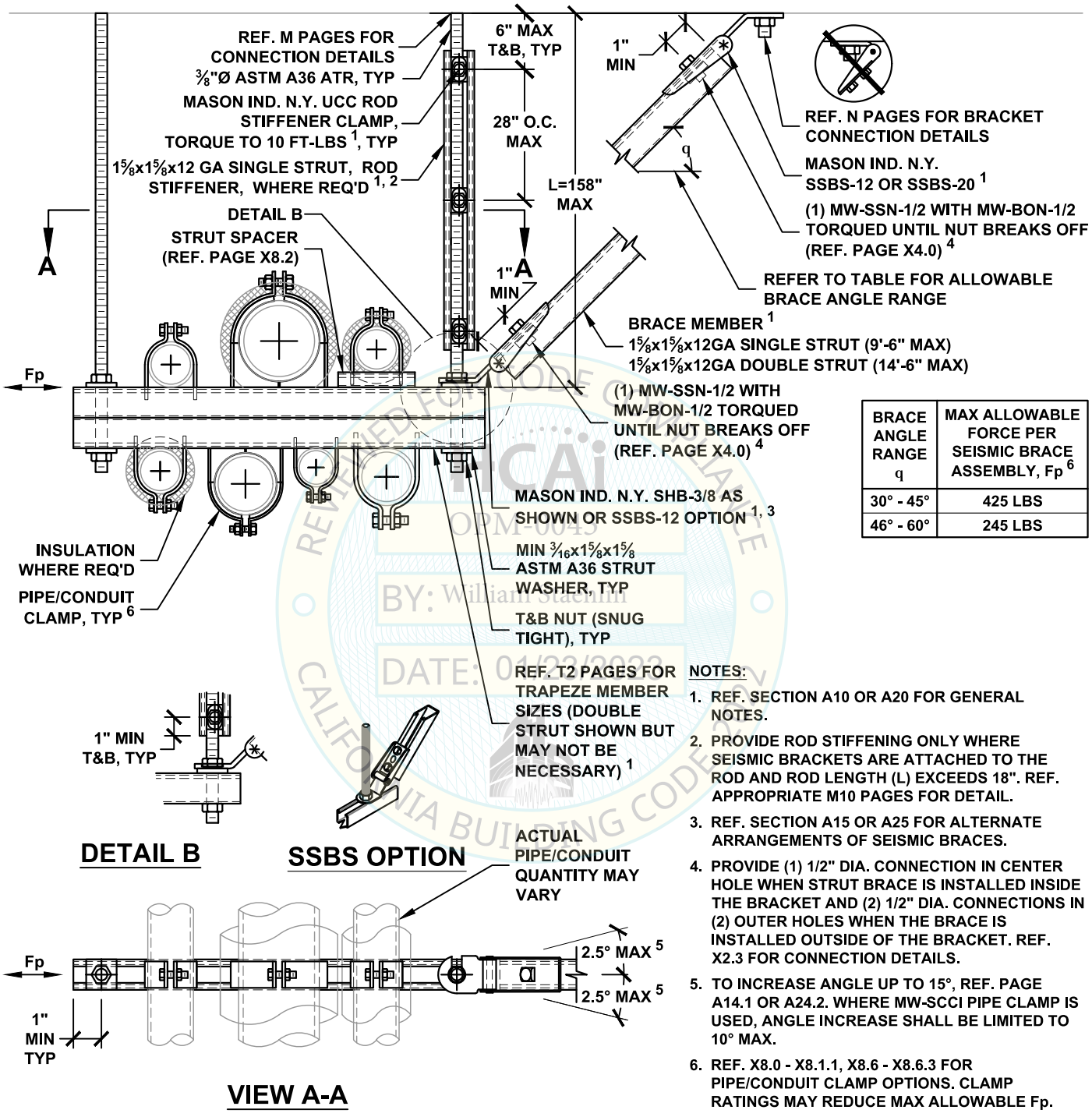

BRACE ANGLE RANGE q	MAX ALLOWABLE FORCE PER SEISMIC BRACE ASSEMBLY, Fp 6
30° - 45°	425 LBS
46° - 60°	245 LBS

NOTES:

1. REF. SECTION A10 OR A20 FOR GENERAL NOTES.
2. PROVIDE ROD STIFFENING ONLY WHERE SEISMIC BRACKETS ARE ATTACHED TO THE ROD AND ROD LENGTH (L) EXCEEDS 18". REF. APPROPRIATE M10 PAGES FOR DETAIL.
3. REF. SECTION A15 OR A25 FOR ALTERNATE ARRANGEMENTS OF SEISMIC BRACES.
4. PROVIDE (1) 1/2" DIA. CONNECTION IN CENTER HOLE WHEN STRUT BRACE IS INSTALLED INSIDE THE BRACKET AND (2) 1/2" DIA. CONNECTIONS IN (2) OUTER HOLES WHEN THE BRACE IS INSTALLED OUTSIDE OF THE BRACKET. REF. X2.3 FOR CONNECTION DETAILS.
5. TO INCREASE ANGLE UP TO 15°, REF. PAGE A14.1 OR A24.2. WHERE MW-SCCI PIPE CLAMP IS USED, ANGLE INCREASE SHALL BE LIMITED TO 10° MAX.
6. REF. X8.0 - X8.1.1, X8.6 - X8.6.3 FOR PIPE/CONDUIT CLAMP OPTIONS. CLAMP RATINGS MAY REDUCE MAX ALLOWABLE Fp.

ICAi
OPM-0043
BY: William Staehlin
DATE: 01/23/2023

MASON WEST
1601 E. Miraloma Ave. Placentia, CA 92870
TEL (714) 630 - 0701, www.masonwest.com

Jiefu "Jeff" Zhang, SE
California SE No. S5270

PAGE
F1.10

HANGER ROD DIAMETER = 3/8"

PIPING/CONDUIT LONGITUDINAL TRAPEZE SEISMIC SOLID BRACING SYSTEM 30 PLF MAX

KIT OPTIONS
TS12L
TS1220L
TSH312L
TSH320L

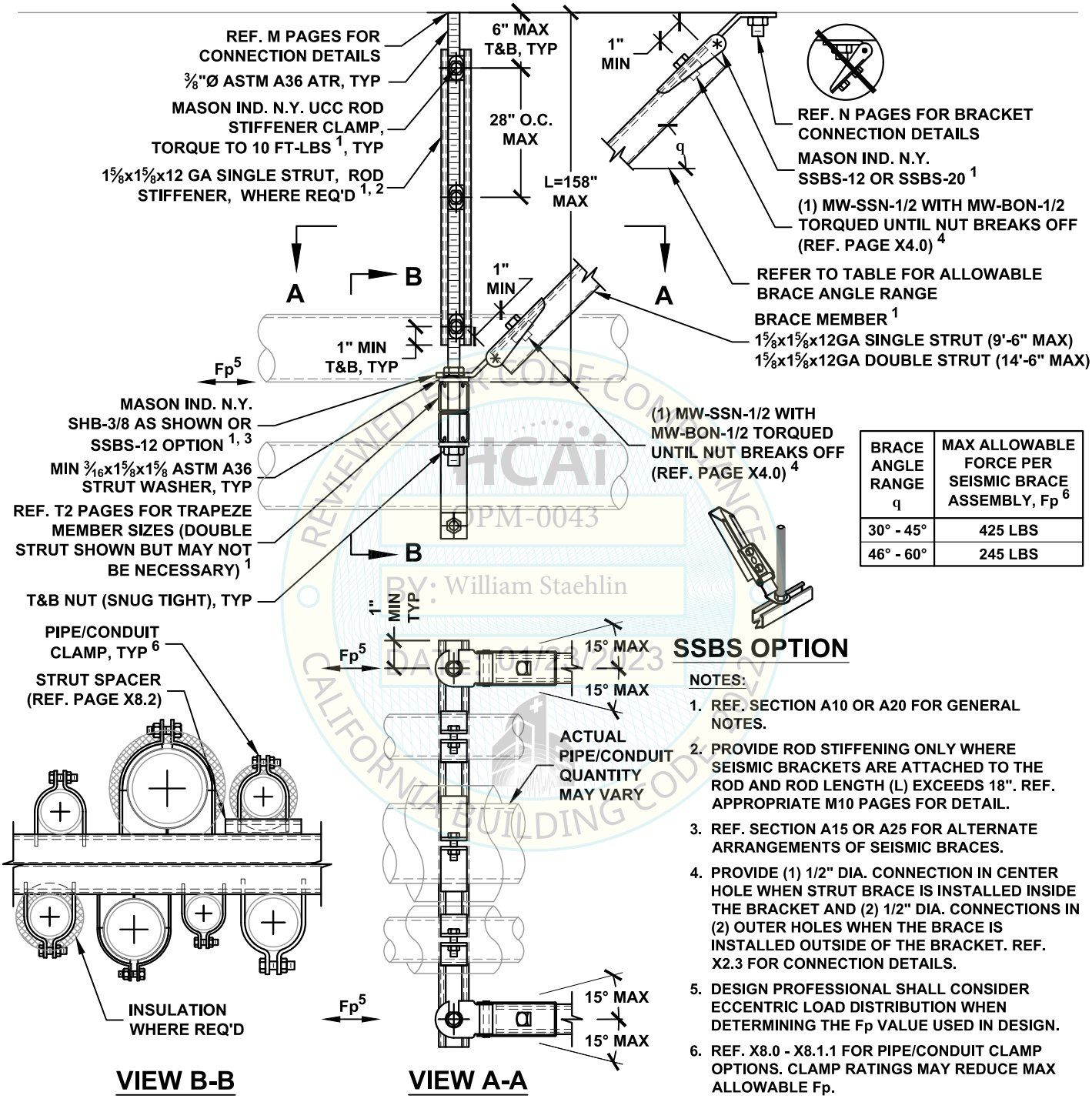

BRACE ANGLE RANGE q	MAX ALLOWABLE FORCE PER SEISMIC BRACE ASSEMBLY, Fp 6
30° - 45°	425 LBS
46° - 60°	245 LBS

SSBS OPTION

NOTES:

1. REF. SECTION A10 OR A20 FOR GENERAL NOTES.
2. PROVIDE ROD STIFFENING ONLY WHERE SEISMIC BRACKETS ARE ATTACHED TO THE ROD AND ROD LENGTH (L) EXCEEDS 18". REF. APPROPRIATE M10 PAGES FOR DETAIL.
3. REF. SECTION A15 OR A25 FOR ALTERNATE ARRANGEMENTS OF SEISMIC BRACES.
4. PROVIDE (1) 1/2" DIA. CONNECTION IN CENTER HOLE WHEN STRUT BRACE IS INSTALLED INSIDE THE BRACKET AND (2) 1/2" DIA. CONNECTIONS IN (2) OUTER HOLES WHEN THE BRACE IS INSTALLED OUTSIDE OF THE BRACKET. REF. X2.3 FOR CONNECTION DETAILS.
5. DESIGN PROFESSIONAL SHALL CONSIDER ECCENTRIC LOAD DISTRIBUTION WHEN DETERMINING THE Fp VALUE USED IN DESIGN.
6. REF. X8.0 - X8.1.1 FOR PIPE/CONDUIT CLAMP OPTIONS. CLAMP RATINGS MAY REDUCE MAX ALLOWABLE Fp.

VIEW B-B

VIEW A-A

REVIEWED FOR CODE COMPLIANCE
HCAi
OPM-0043
BY: William Staehlin
DATE: 01/23/2023
CALIFORNIA BUILDING CODE

MASON WEST
1601 E. Miraloma Ave. Placentia, CA 92870
TEL (714) 630 - 0701, www.masonwest.com

Jiefu "Jeff" Zhang, SE
California SE No. S5270

PAGE
F1.11

HANGER ROD DIAMETER = ⅜"

PIPING/CONDUIT ALL-DIRECTIONAL TRAPEZE SEISMIC SOLID BRACING SYSTEM 30 PLF MAX

KIT OPTIONS
TS12A
TS1220A
TSH312A
TSH320A

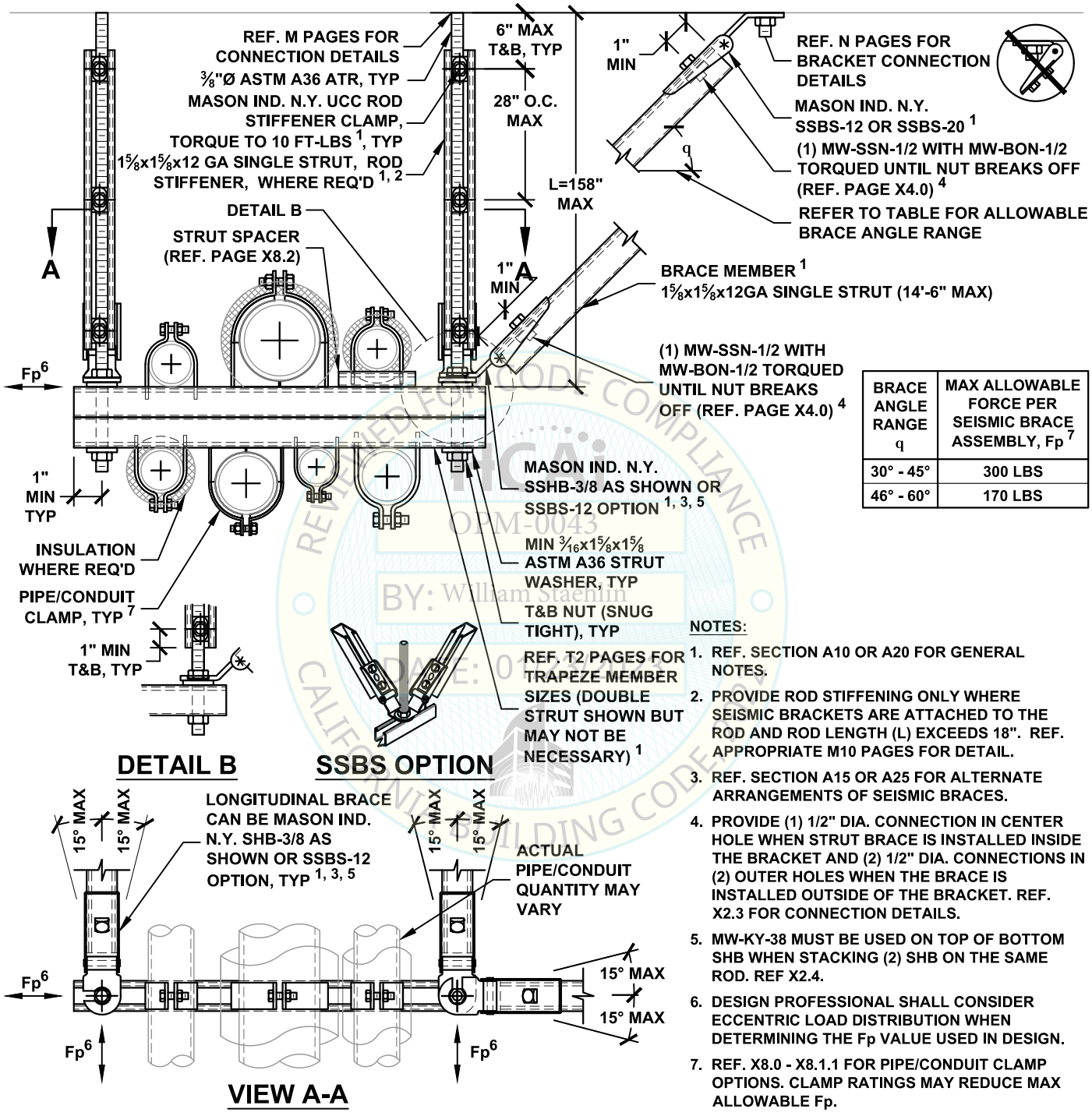

BRACE ANGLE RANGE q	MAX ALLOWABLE FORCE PER SEISMIC BRACE ASSEMBLY, Fp 7
30° - 45°	300 LBS
46° - 60°	170 LBS

DETAIL B SSBS OPTION

VIEW A-A

NOTES:

1. REF. SECTION A10 OR A20 FOR GENERAL NOTES.
2. PROVIDE ROD STIFFENING ONLY WHERE SEISMIC BRACKETS ARE ATTACHED TO THE ROD AND ROD LENGTH (L) EXCEEDS 18". REF. APPROPRIATE M10 PAGES FOR DETAIL.
3. REF. SECTION A15 OR A25 FOR ALTERNATE ARRANGEMENTS OF SEISMIC BRACES.
4. PROVIDE (1) 1/2" DIA. CONNECTION IN CENTER HOLE WHEN STRUT BRACE IS INSTALLED INSIDE THE BRACKET AND (2) 1/2" DIA. CONNECTIONS IN (2) OUTER HOLES WHEN THE BRACE IS INSTALLED OUTSIDE OF THE BRACKET. REF. X2.3 FOR CONNECTION DETAILS.
5. MW-KY-38 MUST BE USED ON TOP OF BOTTOM SHB WHEN STACKING (2) SHB ON THE SAME ROD. REF X2.4.
6. DESIGN PROFESSIONAL SHALL CONSIDER ECCENTRIC LOAD DISTRIBUTION WHEN DETERMINING THE Fp VALUE USED IN DESIGN.
7. REF. X8.0 - X8.1.1 FOR PIPE/CONDUIT CLAMP OPTIONS. CLAMP RATINGS MAY REDUCE MAX ALLOWABLE Fp.

RECEIVED FOR CODE COMPLIANCE
OPM-0043
BY: William Staehlin
DATE: 01/23/2023
CALIFORNIA BUILDING CODE

MASON WEST
1601 E. Miraloma Ave. Placentia, CA 92870
TEL (714) 630 - 0701, www.masonwest.com

Jiefu "Jeff" Zhang, SE
California SE No. S5270

PAGE
F1.12

HANGER ROD DIAMETER = ½"	PIPING/CONDUIT TRANSVERSE TRAPEZE SEISMIC SOLID BRACING SYSTEM 60 PLF MAX	KIT OPTIONS TS12T TS1220T TSH412T TSH420T

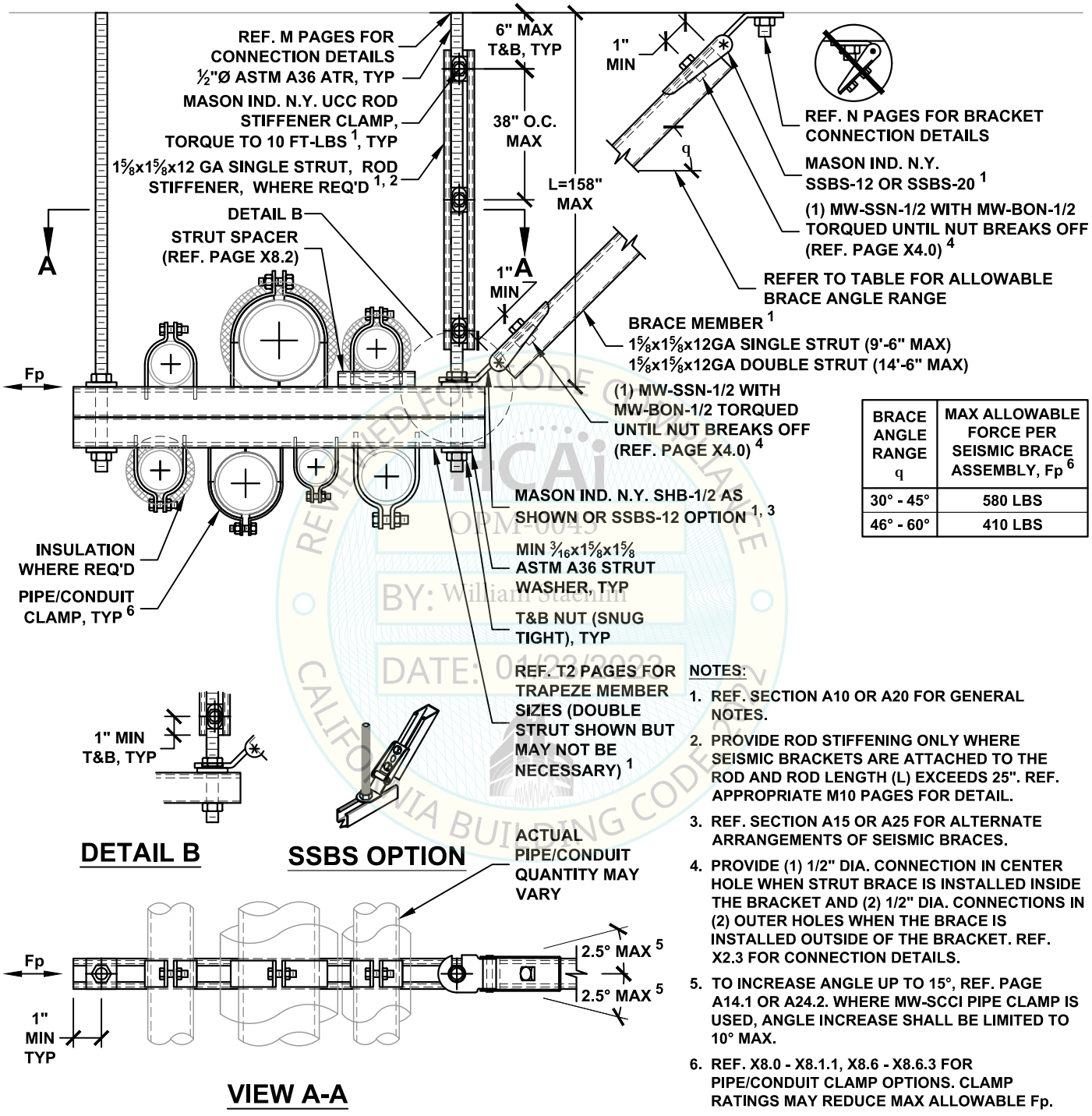

BRACE ANGLE RANGE q	MAX ALLOWABLE FORCE PER SEISMIC BRACE ASSEMBLY, Fp 6
30° - 45°	580 LBS
46° - 60°	410 LBS

NOTES:

1. REF. SECTION A10 OR A20 FOR GENERAL NOTES.
2. PROVIDE ROD STIFFENING ONLY WHERE SEISMIC BRACKETS ARE ATTACHED TO THE ROD AND ROD LENGTH (L) EXCEEDS 25". REF. APPROPRIATE M10 PAGES FOR DETAIL.
3. REF. SECTION A15 OR A25 FOR ALTERNATE ARRANGEMENTS OF SEISMIC BRACES.
4. PROVIDE (1) 1/2" DIA. CONNECTION IN CENTER HOLE WHEN STRUT BRACE IS INSTALLED INSIDE THE BRACKET AND (2) 1/2" DIA. CONNECTIONS IN (2) OUTER HOLES WHEN THE BRACE IS INSTALLED OUTSIDE OF THE BRACKET. REF. X2.3 FOR CONNECTION DETAILS.
5. TO INCREASE ANGLE UP TO 15°, REF. PAGE A14.1 OR A24.2. WHERE MW-SCCI PIPE CLAMP IS USED, ANGLE INCREASE SHALL BE LIMITED TO 10° MAX.
6. REF. X8.0 - X8.1.1, X8.6 - X8.6.3 FOR PIPE/CONDUIT CLAMP OPTIONS. CLAMP RATINGS MAY REDUCE MAX ALLOWABLE Fp.

ICAi
OPM-0043
BY: William Staehlin
DATE: 01/23/2023
CALIFORNIA BUILDING CODE COMPLIANCE

MASON WEST
1601 E. Miraloma Ave. Placentia, CA 92870
TEL (714) 630 - 0701, www.masonwest.com

Jiefu "Jeff" Zhang, SE
California SE No. S5270

PAGE
F1.20

HANGER ROD DIAMETER = ½"

PIPING/CONDUIT LONGITUDINAL TRAPEZE SEISMIC SOLID BRACING SYSTEM 60 PLF MAX

KIT OPTIONS
TS12L
TS1220L
TSH412L
TSH420L

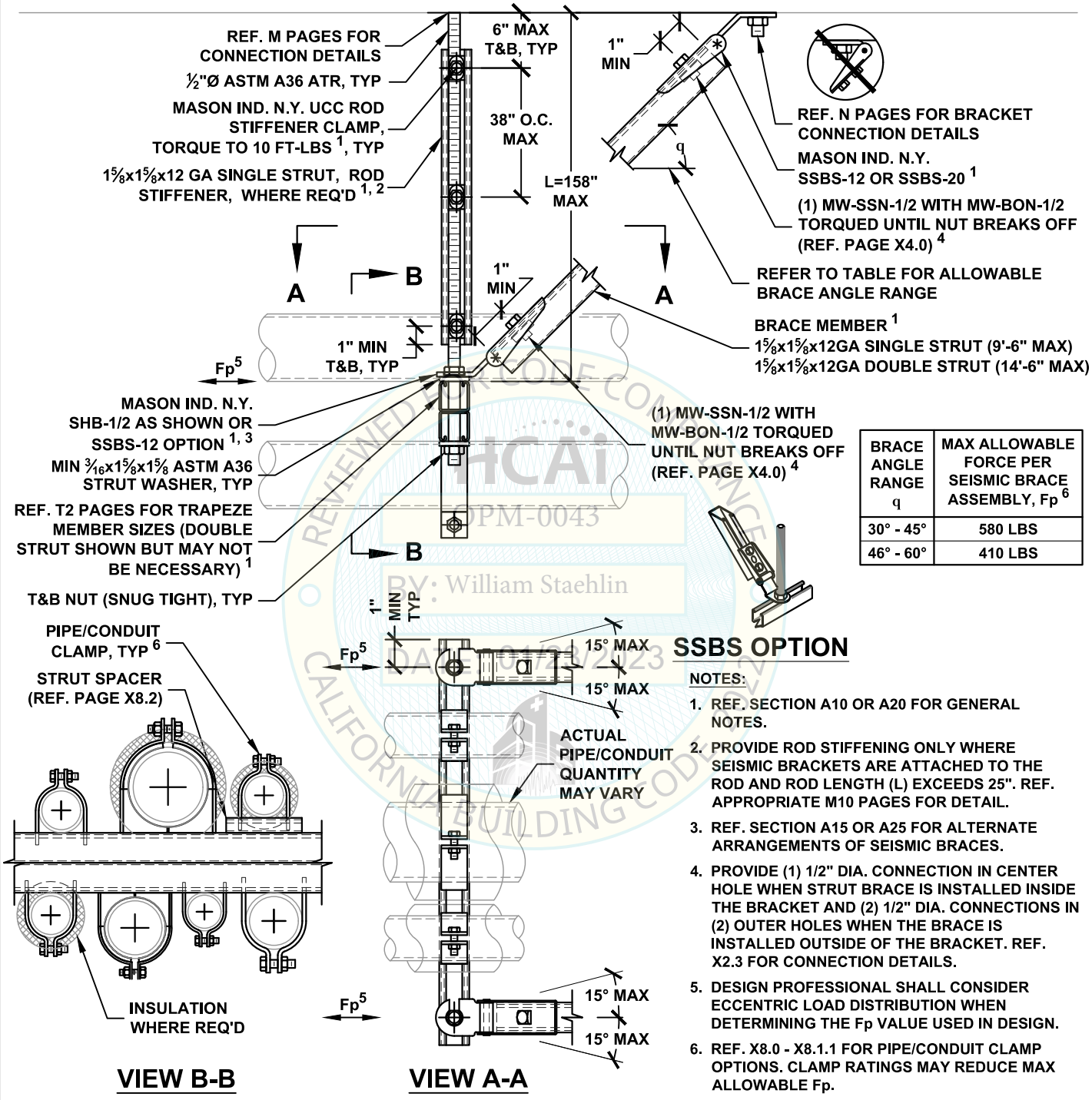

BRACE ANGLE RANGE q	MAX ALLOWABLE FORCE PER SEISMIC BRACE ASSEMBLY, Fp [6]
30° - 45°	580 LBS
46° - 60°	410 LBS

VIEW B-B

VIEW A-A

SSBS OPTION

NOTES:

1. REF. SECTION A10 OR A20 FOR GENERAL NOTES.
2. PROVIDE ROD STIFFENING ONLY WHERE SEISMIC BRACKETS ARE ATTACHED TO THE ROD AND ROD LENGTH (L) EXCEEDS 25". REF. APPROPRIATE M10 PAGES FOR DETAIL.
3. REF. SECTION A15 OR A25 FOR ALTERNATE ARRANGEMENTS OF SEISMIC BRACES.
4. PROVIDE (1) 1/2" DIA. CONNECTION IN CENTER HOLE WHEN STRUT BRACE IS INSTALLED INSIDE THE BRACKET AND (2) 1/2" DIA. CONNECTIONS IN (2) OUTER HOLES WHEN THE BRACE IS INSTALLED OUTSIDE OF THE BRACKET. REF. X2.3 FOR CONNECTION DETAILS.
5. DESIGN PROFESSIONAL SHALL CONSIDER ECCENTRIC LOAD DISTRIBUTION WHEN DETERMINING THE Fp VALUE USED IN DESIGN.
6. REF. X8.0 - X8.1.1 FOR PIPE/CONDUIT CLAMP OPTIONS. CLAMP RATINGS MAY REDUCE MAX ALLOWABLE Fp.

HCAi
OPM-0043
BY: William Staehlin
DATE: 01/23/2023
REVIEWED FOR CODE COMPLIANCE
CALIFORNIA BUILDING CODE

MASON WEST
1601 E. Miraloma Ave. Placentia, CA 92870
TEL (714) 630 - 0701, www.masonwest.com

Jiefu "Jeff" Zhang, SE
California SE No. S5270

PAGE
F1.21

HANGER ROD DIAMETER = ½"

PIPING/CONDUIT ALL-DIRECTIONAL TRAPEZE SEISMIC SOLID BRACING SYSTEM 60 PLF MAX

KIT OPTIONS
TS12A
TS1220A
TSH412A
TSH420A

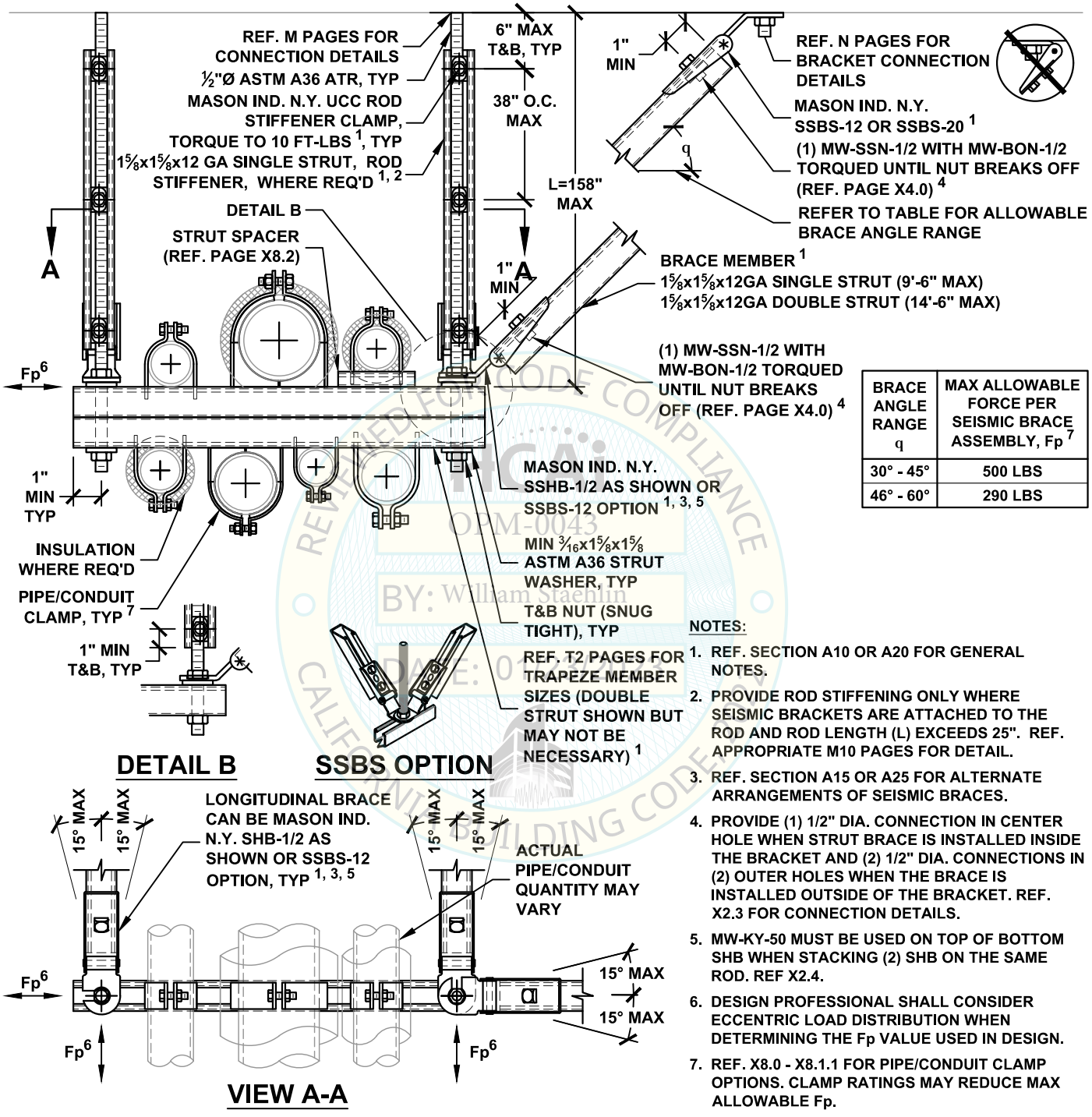

BRACE ANGLE RANGE q	MAX ALLOWABLE FORCE PER SEISMIC BRACE ASSEMBLY, Fp [7]
30° - 45°	500 LBS
46° - 60°	290 LBS

DETAIL B SSBS OPTION

VIEW A-A

NOTES:

1. REF. SECTION A10 OR A20 FOR GENERAL NOTES.
2. PROVIDE ROD STIFFENING ONLY WHERE SEISMIC BRACKETS ARE ATTACHED TO THE ROD AND ROD LENGTH (L) EXCEEDS 25". REF. APPROPRIATE M10 PAGES FOR DETAIL.
3. REF. SECTION A15 OR A25 FOR ALTERNATE ARRANGEMENTS OF SEISMIC BRACES.
4. PROVIDE (1) 1/2" DIA. CONNECTION IN CENTER HOLE WHEN STRUT BRACE IS INSTALLED INSIDE THE BRACKET AND (2) 1/2" DIA. CONNECTIONS IN (2) OUTER HOLES WHEN THE BRACE IS INSTALLED OUTSIDE OF THE BRACKET. REF. X2.3 FOR CONNECTION DETAILS.
5. MW-KY-50 MUST BE USED ON TOP OF BOTTOM SHB WHEN STACKING (2) SHB ON THE SAME ROD. REF X2.4.
6. DESIGN PROFESSIONAL SHALL CONSIDER ECCENTRIC LOAD DISTRIBUTION WHEN DETERMINING THE Fp VALUE USED IN DESIGN.
7. REF. X8.0 - X8.1.1 FOR PIPE/CONDUIT CLAMP OPTIONS. CLAMP RATINGS MAY REDUCE MAX ALLOWABLE Fp.

OPM-0043
BY: William Staehlin
DATE: 01/23/2023

MASON WEST
1601 E. Miraloma Ave. Placentia, CA 92870
TEL (714) 630 - 0701, www.masonwest.com

Jiefu "Jeff" Zhang, SE
California SE No. S5270

PAGE
F1.22

HANGER ROD DIAMETER = 5/8"

PIPING/CONDUIT TRANSVERSE TRAPEZE SEISMIC SOLID BRACING SYSTEM 100 PLF MAX

KIT OPTIONS
TS2012T
TS20T
TSH512T
TSH520T

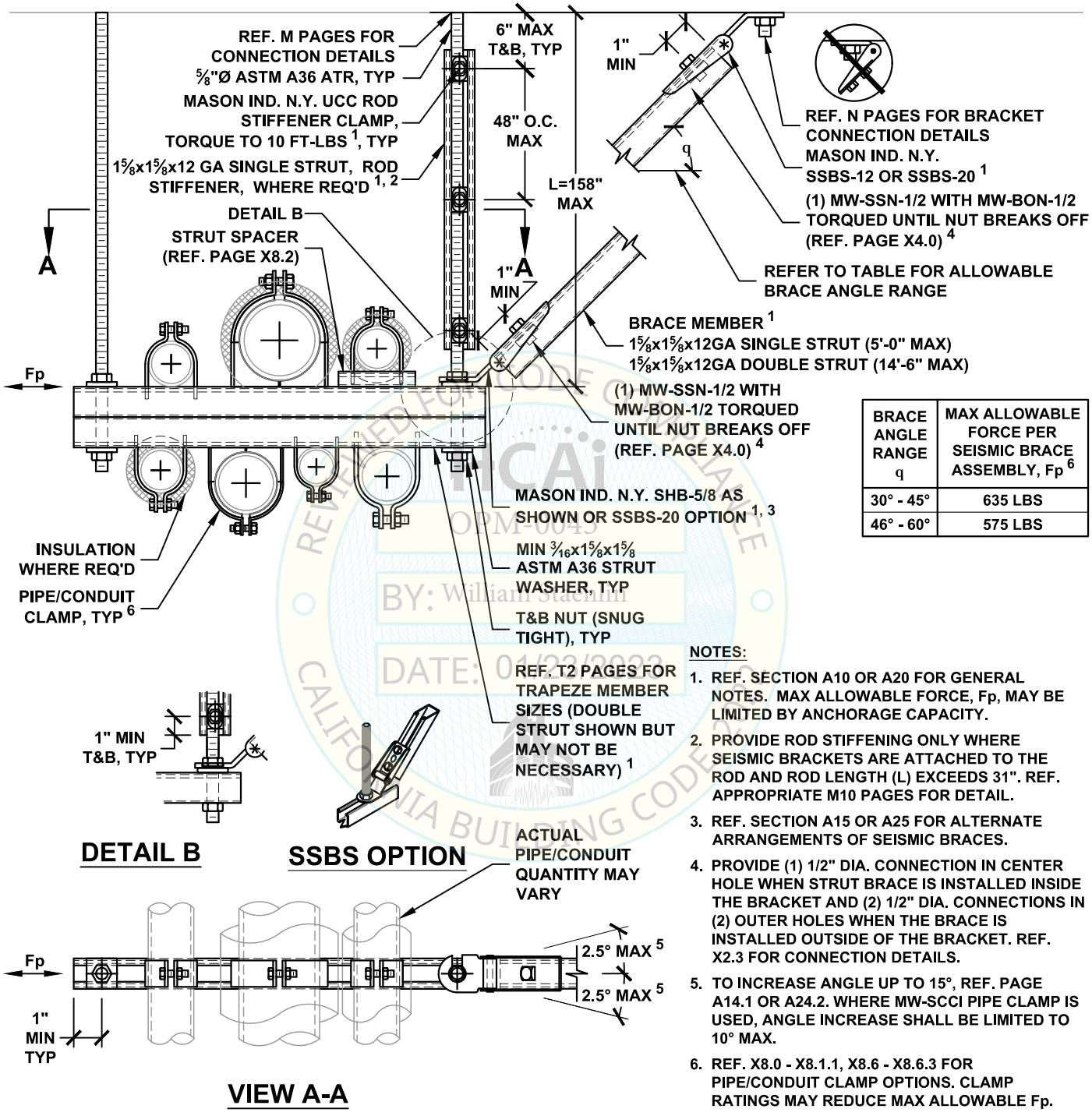

BRACE ANGLE RANGE q	MAX ALLOWABLE FORCE PER SEISMIC BRACE ASSEMBLY, Fp 6
30° - 45°	635 LBS
46° - 60°	575 LBS

RCAi
REVIEWED FOR CODE COMPLIANCE
OPM-0043
BY: William Staehlin
DATE: 01/23/2023
CALIFORNIA BUILDING CODE

NOTES:

1. REF. SECTION A10 OR A20 FOR GENERAL NOTES. MAX ALLOWABLE FORCE, Fp, MAY BE LIMITED BY ANCHORAGE CAPACITY.
2. PROVIDE ROD STIFFENING ONLY WHERE SEISMIC BRACKETS ARE ATTACHED TO THE ROD AND ROD LENGTH (L) EXCEEDS 31". REF. APPROPRIATE M10 PAGES FOR DETAIL.
3. REF. SECTION A15 OR A25 FOR ALTERNATE ARRANGEMENTS OF SEISMIC BRACES.
4. PROVIDE (1) 1/2" DIA. CONNECTION IN CENTER HOLE WHEN STRUT BRACE IS INSTALLED INSIDE THE BRACKET AND (2) 1/2" DIA. CONNECTIONS IN (2) OUTER HOLES WHEN THE BRACE IS INSTALLED OUTSIDE OF THE BRACKET. REF. X2.3 FOR CONNECTION DETAILS.
5. TO INCREASE ANGLE UP TO 15°, REF. PAGE A14.1 OR A24.2. WHERE MW-SCCI PIPE CLAMP IS USED, ANGLE INCREASE SHALL BE LIMITED TO 10° MAX.
6. REF. X8.0 - X8.1.1, X8.6 - X8.6.3 FOR PIPE/CONDUIT CLAMP OPTIONS. CLAMP RATINGS MAY REDUCE MAX ALLOWABLE Fp.

MASON WEST
1601 E. Miraloma Ave. Placentia, CA 92870
TEL (714) 630 - 0701, www.masonwest.com

Jiefu "Jeff" Zhang, SE
California SE No. S5270

PAGE
F1.30

HANGER ROD DIAMETER = 5/8"

PIPING/CONDUIT LONGITUDINAL TRAPEZE SEISMIC SOLID BRACING SYSTEM 100 PLF MAX

KIT OPTIONS
TS2012L
TS20L
TSH512L
TSH520L

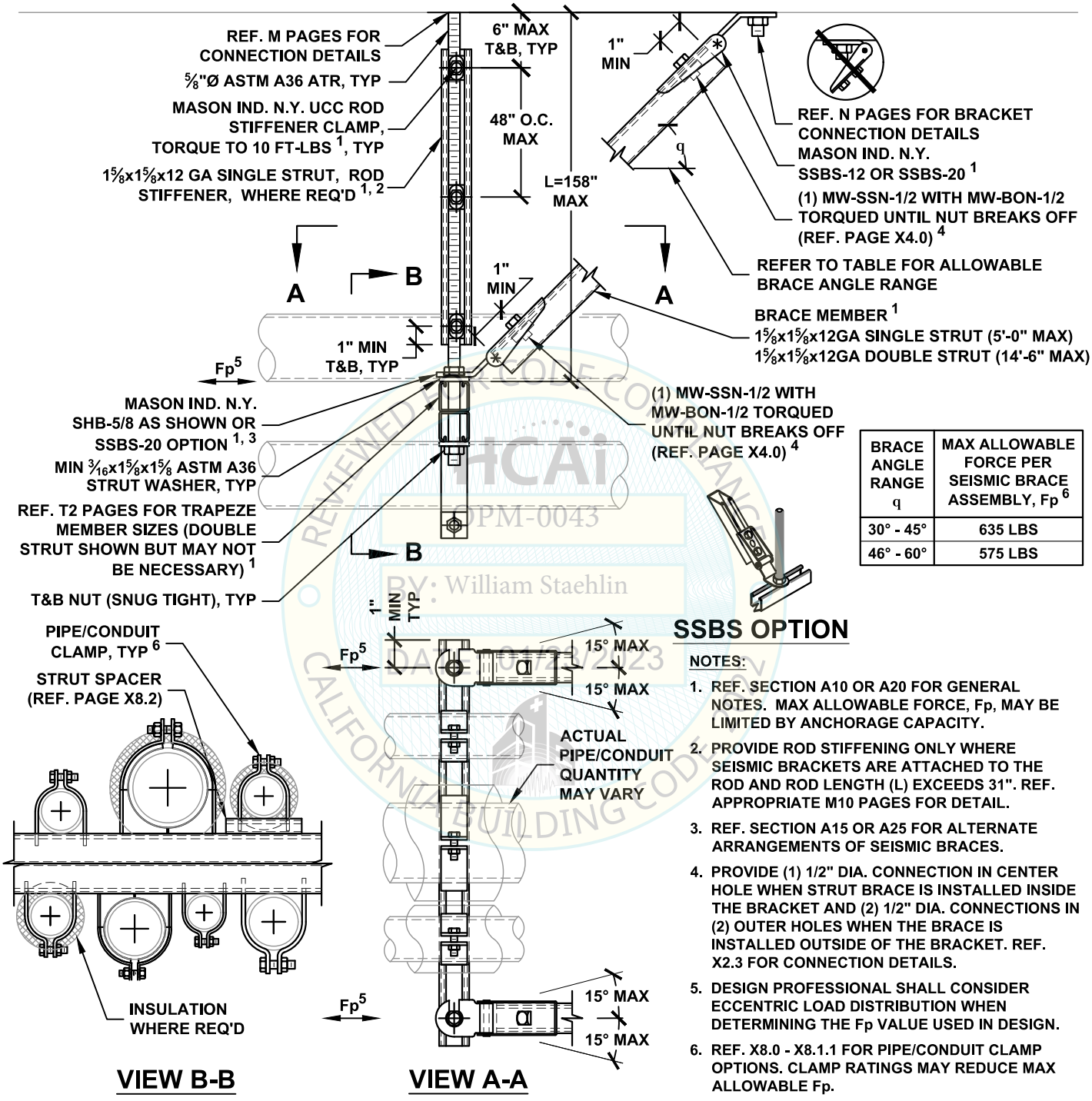

BRACE ANGLE RANGE q	MAX ALLOWABLE FORCE PER SEISMIC BRACE ASSEMBLY, Fp 6
30° - 45°	635 LBS
46° - 60°	575 LBS

SSBS OPTION

NOTES:

1. REF. SECTION A10 OR A20 FOR GENERAL NOTES. MAX ALLOWABLE FORCE, Fp, MAY BE LIMITED BY ANCHORAGE CAPACITY.
2. PROVIDE ROD STIFFENING ONLY WHERE SEISMIC BRACKETS ARE ATTACHED TO THE ROD AND ROD LENGTH (L) EXCEEDS 31". REF. APPROPRIATE M10 PAGES FOR DETAIL.
3. REF. SECTION A15 OR A25 FOR ALTERNATE ARRANGEMENTS OF SEISMIC BRACES.
4. PROVIDE (1) 1/2" DIA. CONNECTION IN CENTER HOLE WHEN STRUT BRACE IS INSTALLED INSIDE THE BRACKET AND (2) 1/2" DIA. CONNECTIONS IN (2) OUTER HOLES WHEN THE BRACE IS INSTALLED OUTSIDE OF THE BRACKET. REF. X2.3 FOR CONNECTION DETAILS.
5. DESIGN PROFESSIONAL SHALL CONSIDER ECCENTRIC LOAD DISTRIBUTION WHEN DETERMINING THE Fp VALUE USED IN DESIGN.
6. REF. X8.0 - X8.1.1 FOR PIPE/CONDUIT CLAMP OPTIONS. CLAMP RATINGS MAY REDUCE MAX ALLOWABLE Fp.

VIEW B-B

VIEW A-A

REVIEWED FOR CODE COMPLIANCE
HCAi
OPM-0043
BY: William Staehlin
DATE: 01/23/2023
CALIFORNIA BUILDING CODE

MASON WEST
1601 E. Miraloma Ave. Placentia, CA 92870
TEL (714) 630 - 0701, www.masonwest.com

Jiefu "Jeff" Zhang, SE
California SE No. S5270

PAGE
F1.31

HANGER ROD DIAMETER = 5/8"

PIPING/CONDUIT ALL-DIRECTIONAL TRAPEZE SEISMIC SOLID BRACING SYSTEM 100 PLF MAX

KIT OPTIONS
TS2012A
TS20A
TSH512A
TSH520A

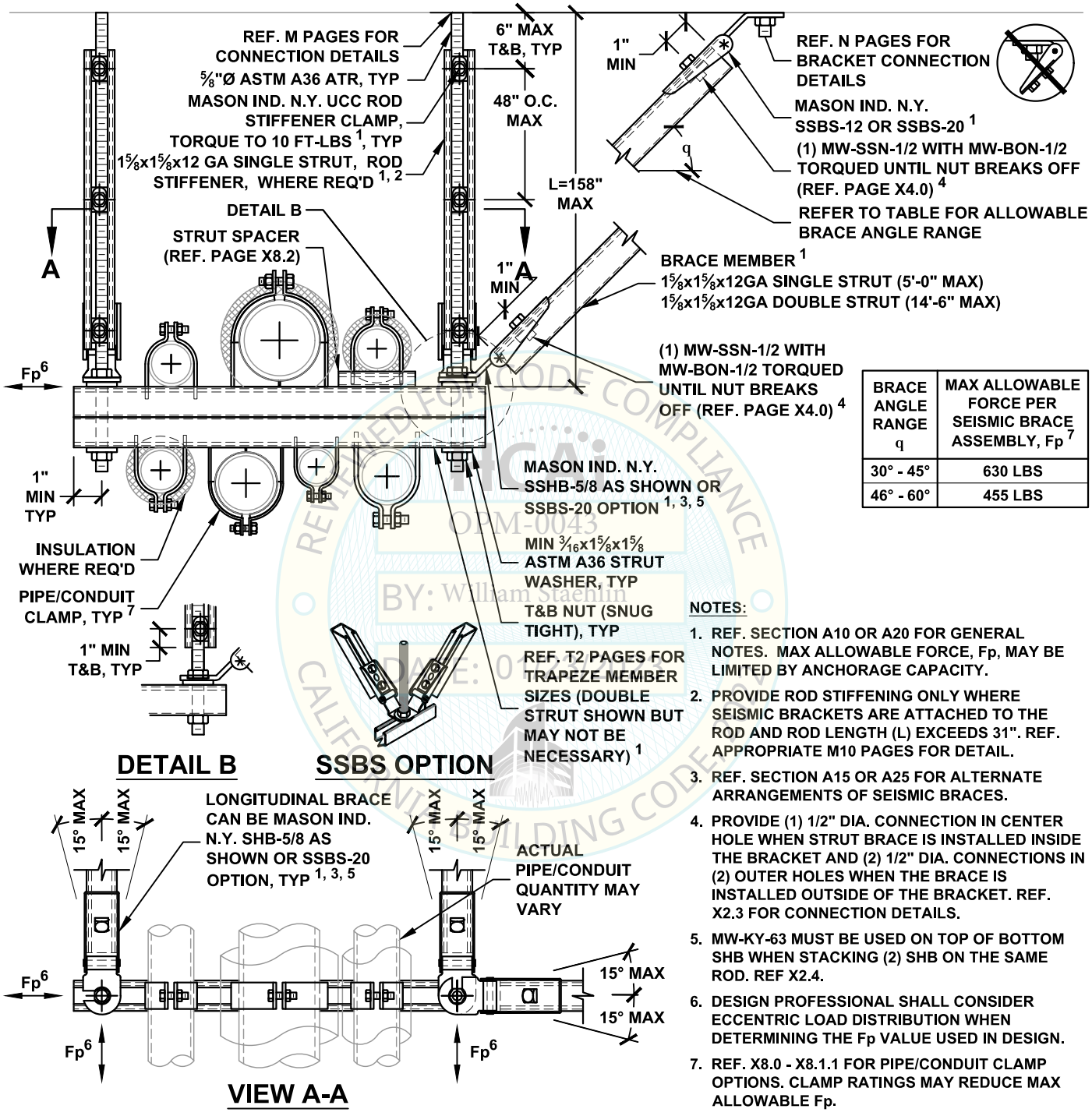

BRACE ANGLE RANGE q	MAX ALLOWABLE FORCE PER SEISMIC BRACE ASSEMBLY, Fp 7
30° - 45°	630 LBS
46° - 60°	455 LBS

DETAIL B

SSBS OPTION

VIEW A-A

NOTES:

1. REF. SECTION A10 OR A20 FOR GENERAL NOTES. MAX ALLOWABLE FORCE, Fp, MAY BE LIMITED BY ANCHORAGE CAPACITY.
2. PROVIDE ROD STIFFENING ONLY WHERE SEISMIC BRACKETS ARE ATTACHED TO THE ROD AND ROD LENGTH (L) EXCEEDS 31". REF. APPROPRIATE M10 PAGES FOR DETAIL.
3. REF. SECTION A15 OR A25 FOR ALTERNATE ARRANGEMENTS OF SEISMIC BRACES.
4. PROVIDE (1) 1/2" DIA. CONNECTION IN CENTER HOLE WHEN STRUT BRACE IS INSTALLED INSIDE THE BRACKET AND (2) 1/2" DIA. CONNECTIONS IN (2) OUTER HOLES WHEN THE BRACE IS INSTALLED OUTSIDE OF THE BRACKET. REF. X2.3 FOR CONNECTION DETAILS.
5. MW-KY-63 MUST BE USED ON TOP OF BOTTOM SHB WHEN STACKING (2) SHB ON THE SAME ROD. REF X2.4.
6. DESIGN PROFESSIONAL SHALL CONSIDER ECCENTRIC LOAD DISTRIBUTION WHEN DETERMINING THE Fp VALUE USED IN DESIGN.
7. REF. X8.0 - X8.1.1 FOR PIPE/CONDUIT CLAMP OPTIONS. CLAMP RATINGS MAY REDUCE MAX ALLOWABLE Fp.

RECEIVED FOR CODE COMPLIANCE
OPM-0043
BY: William Staehlin
DATE: 01/23/2023
CALIFORNIA BUILDING CODE

MASON WEST
1601 E. Miraloma Ave. Placentia, CA 92870
TEL (714) 630 - 0701, www.masonwest.com

Jiefu "Jeff" Zhang, SE
California SE No. S5270

PAGE
F1.32

HANGER ROD DIAMETER = 5/8"	PIPING/CONDUIT TRANSVERSE TRAPEZE SEISMIC SOLID BRACING SYSTEM 100 PLF MAX	KIT OPTIONS TSH54T TSH5T

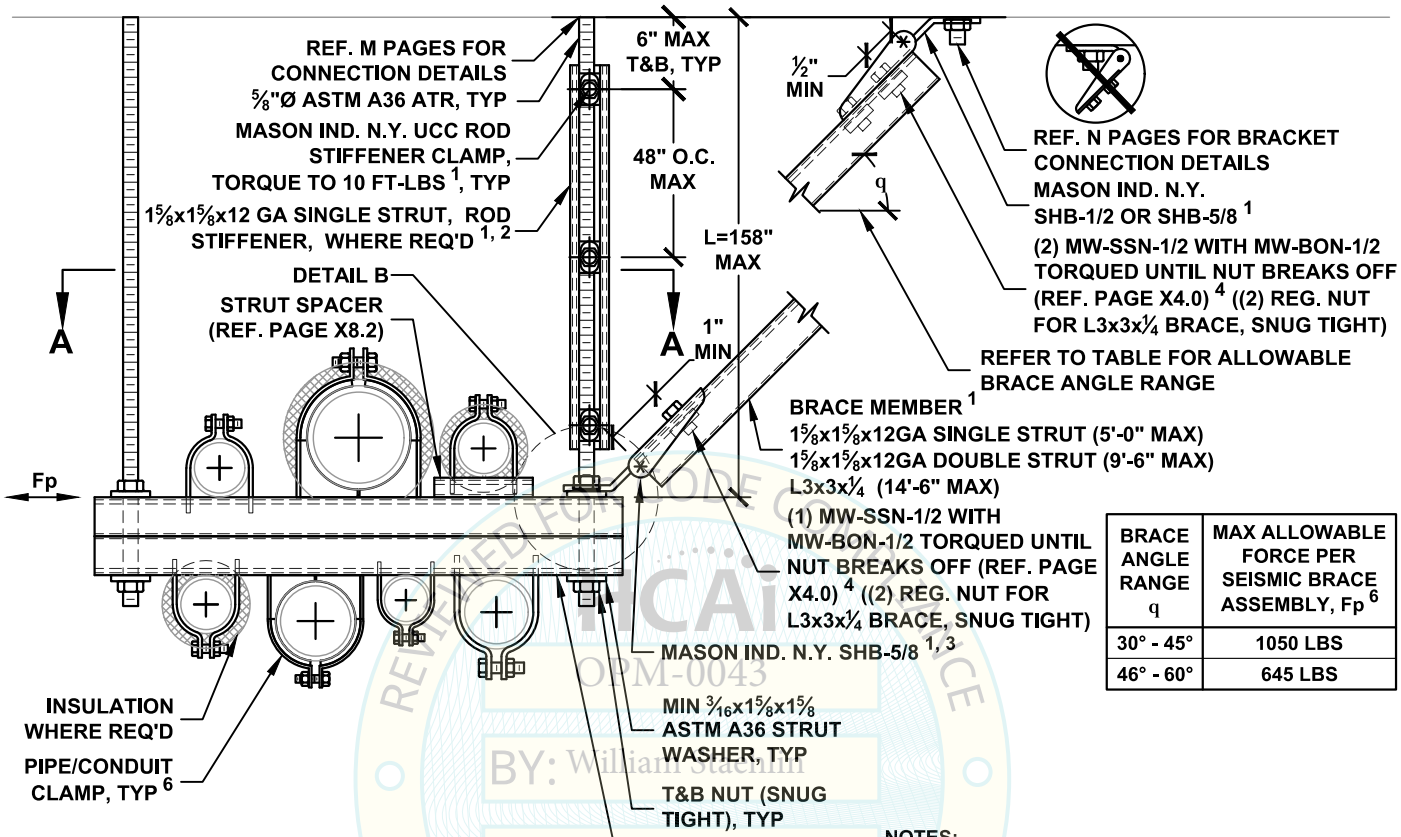

BRACE ANGLE RANGE q	MAX ALLOWABLE FORCE PER SEISMIC BRACE ASSEMBLY, Fp 6
30° - 45°	1050 LBS
46° - 60°	645 LBS

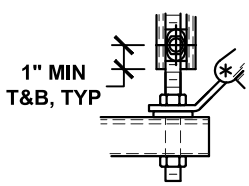

DETAIL B

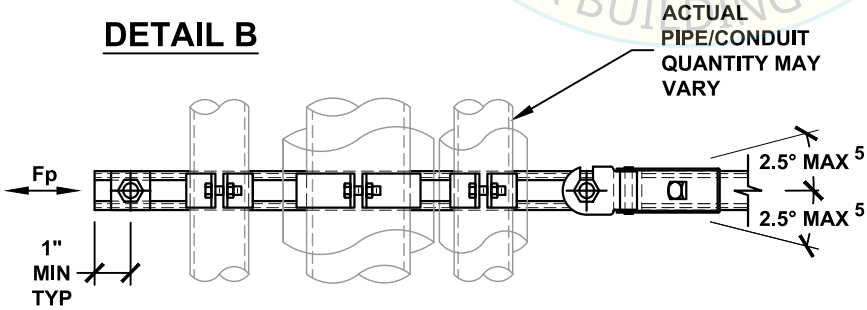

VIEW A-A

NOTES:

1. REF. SECTION A10 OR A20 FOR GENERAL NOTES. MAX ALLOWABLE FORCE, Fp, MAY BE LIMITED BY ANCHORAGE CAPACITY.
2. PROVIDE ROD STIFFENING ONLY WHERE SEISMIC BRACKETS ARE ATTACHED TO THE ROD AND ROD LENGTH (L) EXCEEDS 31". REF. APPROPRIATE M10 PAGES FOR DETAIL.
3. REF. SECTION A15 OR A25 FOR ALTERNATE ARRANGEMENTS OF SEISMIC BRACES.
4. PROVIDE (1) 1/2" DIA. CONNECTION IN CENTER HOLE WHEN STRUT BRACE IS INSTALLED INSIDE THE BRACKET AND (2) 1/2" DIA. CONNECTIONS IN (2) OUTER HOLES WHEN THE BRACE IS INSTALLED OUTSIDE OF THE BRACKET. REF. X2.3 FOR CONNECTION DETAILS.
5. TO INCREASE ANGLE UP TO 15°, REF. PAGE A14.1 OR A24.2. WHERE MW-SCCI PIPE CLAMP IS USED, ANGLE INCREASE SHALL BE LIMITED TO 10° MAX.
6. REF. X8.0 - X8.1.1, X8.6 - X8.6.3 FOR PIPE/CONDUIT CLAMP OPTIONS. CLAMP RATINGS MAY REDUCE MAX ALLOWABLE Fp.

REVIEWED FOR CODE COMPLIANCE
HCAI
OPM-0043
BY: William Staehlin
DATE: 01/23/2023
CALIFORNIA BUILDING CODE 2022

MASON WEST
1601 E. Miraloma Ave. Placentia, CA 92870
TEL (714) 630 - 0701, www.masonwest.com

Jiefu "Jeff" Zhang, SE
California SE No. S5270

PAGE
F1.33

HANGER ROD DIAMETER = 5/8"

PIPING/CONDUIT LONGITUDINAL TRAPEZE SEISMIC SOLID BRACING SYSTEM 100 PLF MAX

KIT OPTIONS
TSH54L
TSH5L

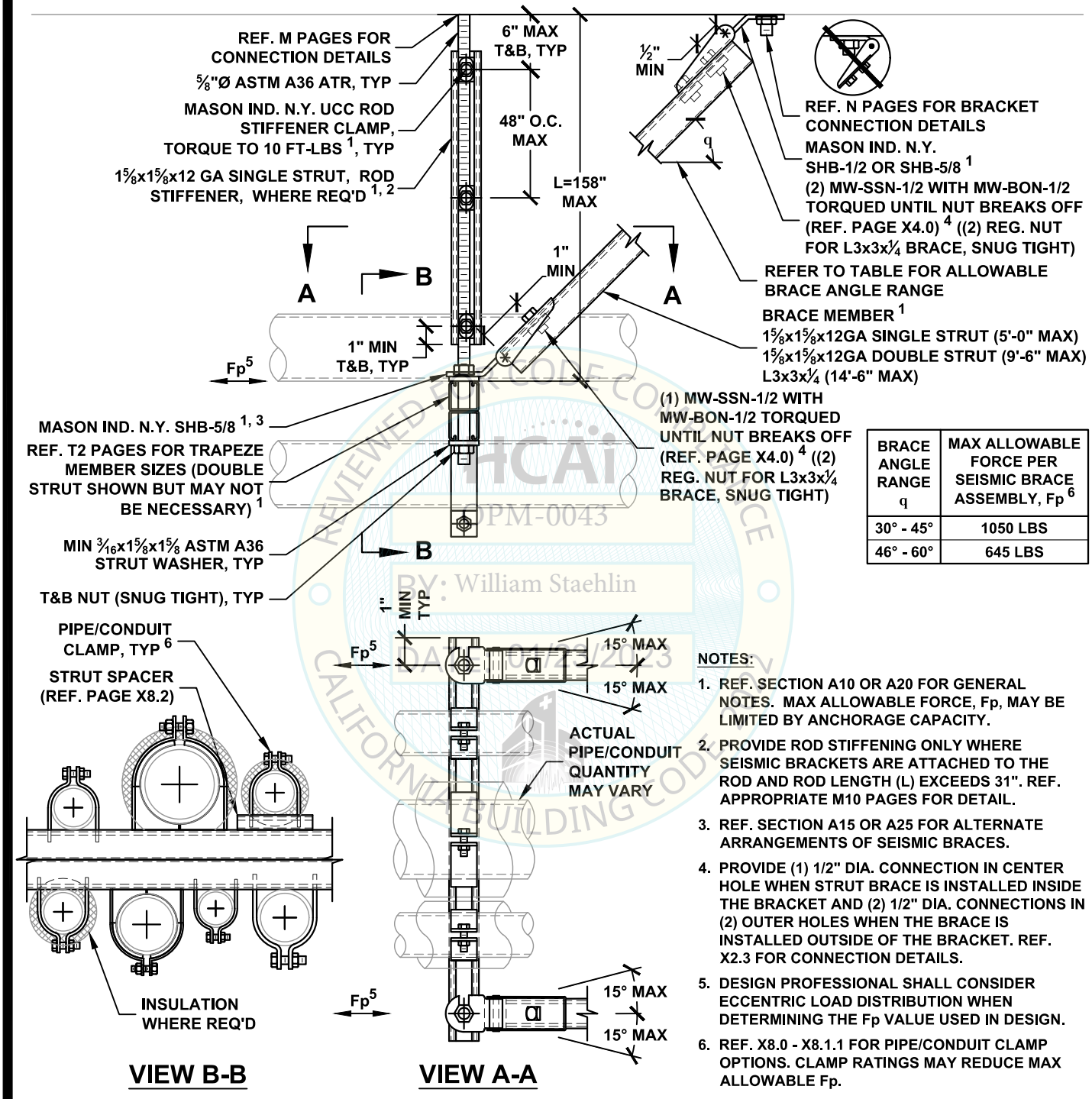

BRACE ANGLE RANGE q	MAX ALLOWABLE FORCE PER SEISMIC BRACE ASSEMBLY, Fp 6
30° - 45°	1050 LBS
46° - 60°	645 LBS

VIEW B-B

VIEW A-A

NOTES:

1. REF. SECTION A10 OR A20 FOR GENERAL NOTES. MAX ALLOWABLE FORCE, Fp, MAY BE LIMITED BY ANCHORAGE CAPACITY.
2. PROVIDE ROD STIFFENING ONLY WHERE SEISMIC BRACKETS ARE ATTACHED TO THE ROD AND ROD LENGTH (L) EXCEEDS 31". REF. APPROPRIATE M10 PAGES FOR DETAIL.
3. REF. SECTION A15 OR A25 FOR ALTERNATE ARRANGEMENTS OF SEISMIC BRACES.
4. PROVIDE (1) 1/2" DIA. CONNECTION IN CENTER HOLE WHEN STRUT BRACE IS INSTALLED INSIDE THE BRACKET AND (2) 1/2" DIA. CONNECTIONS IN (2) OUTER HOLES WHEN THE BRACE IS INSTALLED OUTSIDE OF THE BRACKET. REF. X2.3 FOR CONNECTION DETAILS.
5. DESIGN PROFESSIONAL SHALL CONSIDER ECCENTRIC LOAD DISTRIBUTION WHEN DETERMINING THE Fp VALUE USED IN DESIGN.
6. REF. X8.0 - X8.1.1 FOR PIPE/CONDUIT CLAMP OPTIONS. CLAMP RATINGS MAY REDUCE MAX ALLOWABLE Fp.

REVIEWED FOR CODE COMPLIANCE
HCAi
OPM-0043
BY: William Staehlin
DATE: 01/23/2023
CALIFORNIA BUILDING CODE

MASON WEST
1601 E. Miraloma Ave. Placentia, CA 92870
TEL (714) 630 - 0701, www.masonwest.com

Jiefu "Jeff" Zhang, SE
California SE No. S5270

PAGE
F1.34

HANGER ROD DIAMETER = 5/8"

PIPING/CONDUIT ALL-DIRECTIONAL TRAPEZE SEISMIC SOLID BRACING SYSTEM 100 PLF MAX

KIT OPTIONS
TSH54A
TSH5A

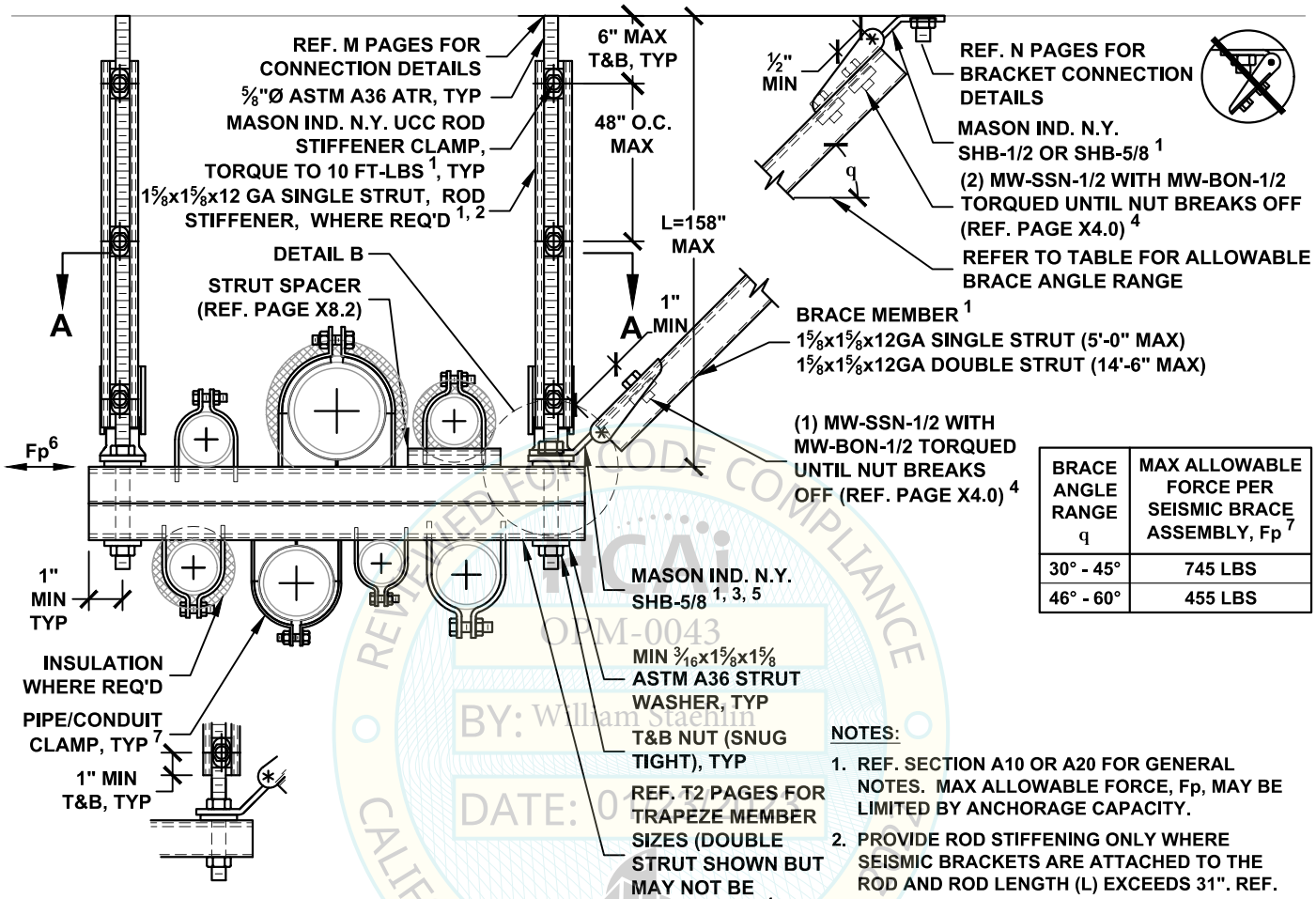

BRACE ANGLE RANGE q	MAX ALLOWABLE FORCE PER SEISMIC BRACE ASSEMBLY, Fp 7
30° - 45°	745 LBS
46° - 60°	455 LBS

DETAIL B

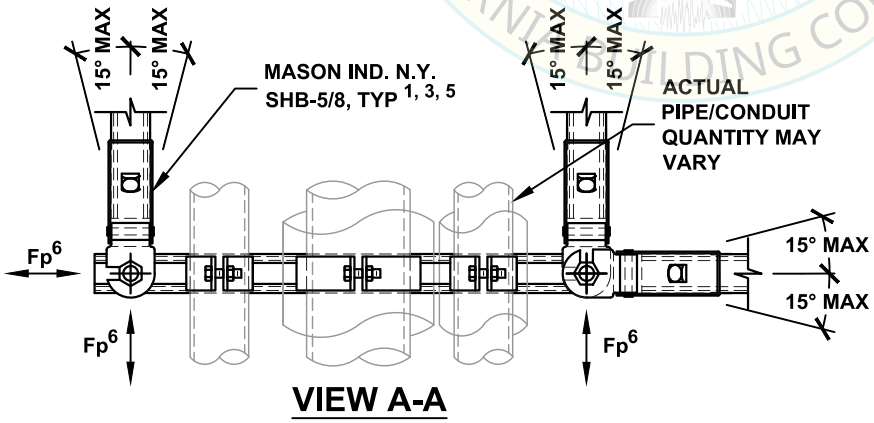

VIEW A-A

NOTES:

1. REF. SECTION A10 OR A20 FOR GENERAL NOTES. MAX ALLOWABLE FORCE, Fp, MAY BE LIMITED BY ANCHORAGE CAPACITY.
2. PROVIDE ROD STIFFENING ONLY WHERE SEISMIC BRACKETS ARE ATTACHED TO THE ROD AND ROD LENGTH (L) EXCEEDS 31". REF. APPROPRIATE M10 PAGES FOR DETAIL.
3. REF. SECTION A15 OR A25 FOR ALTERNATE ARRANGEMENTS OF SEISMIC BRACES.
4. PROVIDE (1) 1/2" DIA. CONNECTION IN CENTER HOLE WHEN STRUT BRACE IS INSTALLED INSIDE THE BRACKET AND (2) 1/2" DIA. CONNECTIONS IN (2) OUTER HOLES WHEN THE BRACE IS INSTALLED OUTSIDE OF THE BRACKET. REF. X2.3 FOR CONNECTION DETAILS.
5. MW-KY-63 MUST BE USED ON TOP OF BOTTOM SHB WHEN STACKING (2) SHB ON THE SAME ROD. REF X2.4.
6. DESIGN PROFESSIONAL SHALL CONSIDER ECCENTRIC LOAD DISTRIBUTION WHEN DETERMINING THE Fp VALUE USED IN DESIGN.
7. REF. X8.0 - X8.1.1 FOR PIPE/CONDUIT CLAMP OPTIONS. CLAMP RATINGS MAY REDUCE MAX ALLOWABLE Fp.

ICC-ES REVIEWED FOR CODE COMPLIANCE
CALIFORNIA BUILDING CODE
OPM-0043
BY: William Staehlin
DATE: 01/23/2023

MASON WEST
1601 E. Miraloma Ave. Placentia, CA 92870
TEL (714) 630 - 0701, www.masonwest.com

Jiefu "Jeff" Zhang, SE
California SE No. S5270

PAGE
F1.35

HANGER ROD DIAMETER = ¾"	PIPING/CONDUIT TRANSVERSE TRAPEZE SEISMIC SOLID BRACING SYSTEM 150 PLF MAX	KIT OPTIONS TS20T TSH620T

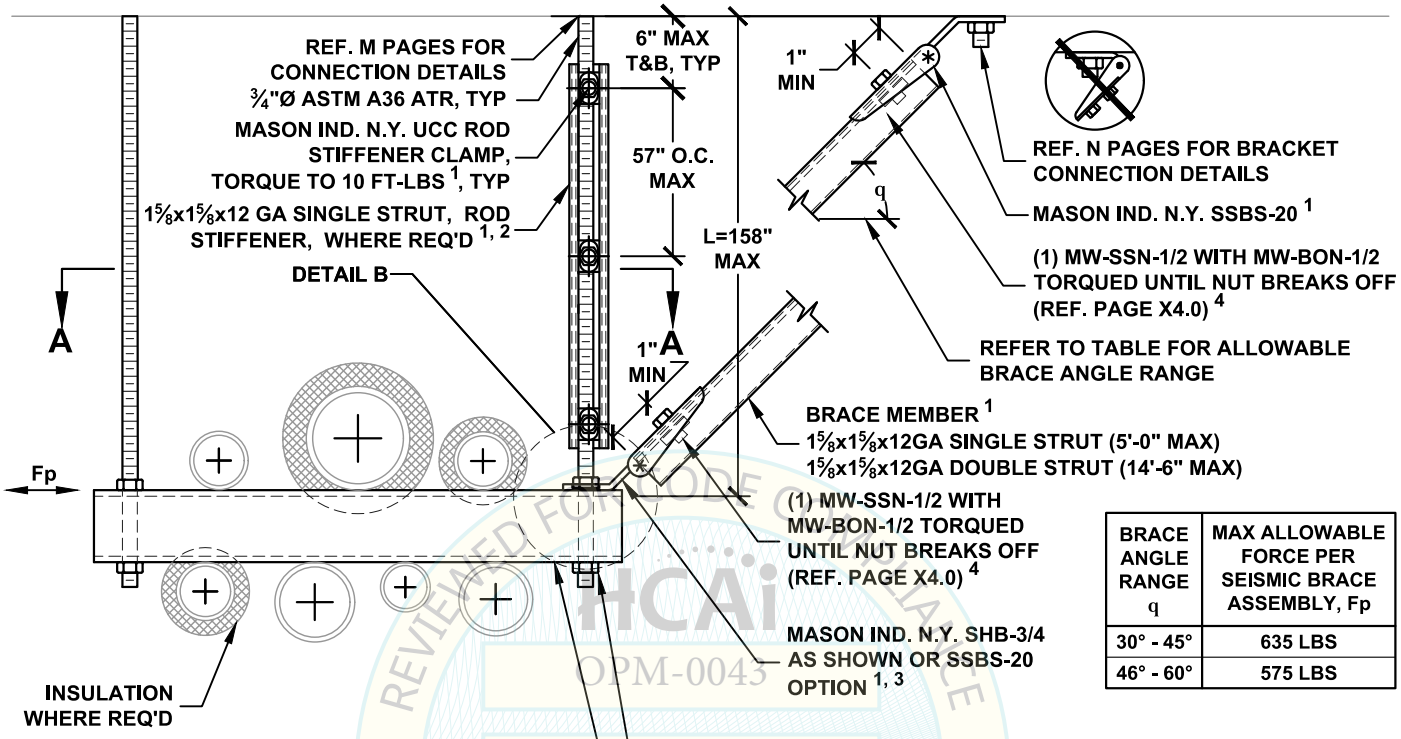

BRACE ANGLE RANGE q	MAX ALLOWABLE FORCE PER SEISMIC BRACE ASSEMBLY, Fp
30° - 45°	635 LBS
46° - 60°	575 LBS

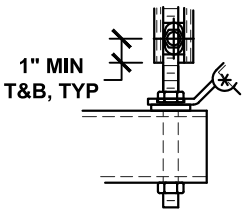

DETAIL B

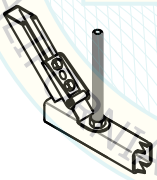

SSBS OPTION

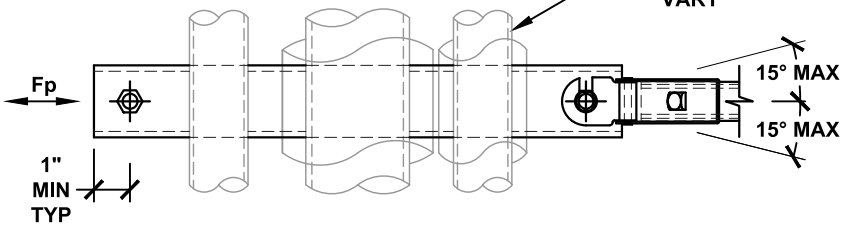

VIEW A-A

NOTES:

1. REF. SECTION A10 OR A20 FOR GENERAL NOTES.
2. PROVIDE ROD STIFFENING ONLY WHERE SEISMIC BRACKETS ARE ATTACHED TO THE ROD AND ROD LENGTH (L) EXCEEDS 37". REF. APPROPRIATE M10 PAGES FOR DETAIL.
3. REF. SECTION A15 OR A25 FOR ALTERNATE ARRANGEMENTS OF SEISMIC BRACES.
4. PROVIDE (1) 1/2" DIA. CONNECTION IN CENTER HOLE WHEN STRUT BRACE IS INSTALLED INSIDE THE BRACKET AND (2) 1/2" DIA. CONNECTIONS IN (2) OUTER HOLES WHEN THE BRACE IS INSTALLED OUTSIDE OF THE BRACKET. REF. X2.3 FOR CONNECTION DETAILS.
5. REF. SECTION A16 OR A26 FOR PIPE/CONDUIT ATTACHMENT OPTIONS.

REVIEWED FOR CODE COMPLIANCE
HCAi
OPM-0043
BY: William Staehlin
DATE: 01/23/2023
CALIFORNIA BUILDING CODE 2022

MASON WEST
1601 E. Miraloma Ave. Placentia, CA 92870
TEL (714) 630 - 0701, www.masonwest.com

Jiefu "Jeff" Zhang, SE
California SE No. S5270

HANGER ROD DIAMETER = ¾"	PIPING/CONDUIT LONGITUDINAL TRAPEZE SEISMIC SOLID BRACING SYSTEM 150 PLF MAX	KIT OPTIONS TS20L TSH620L

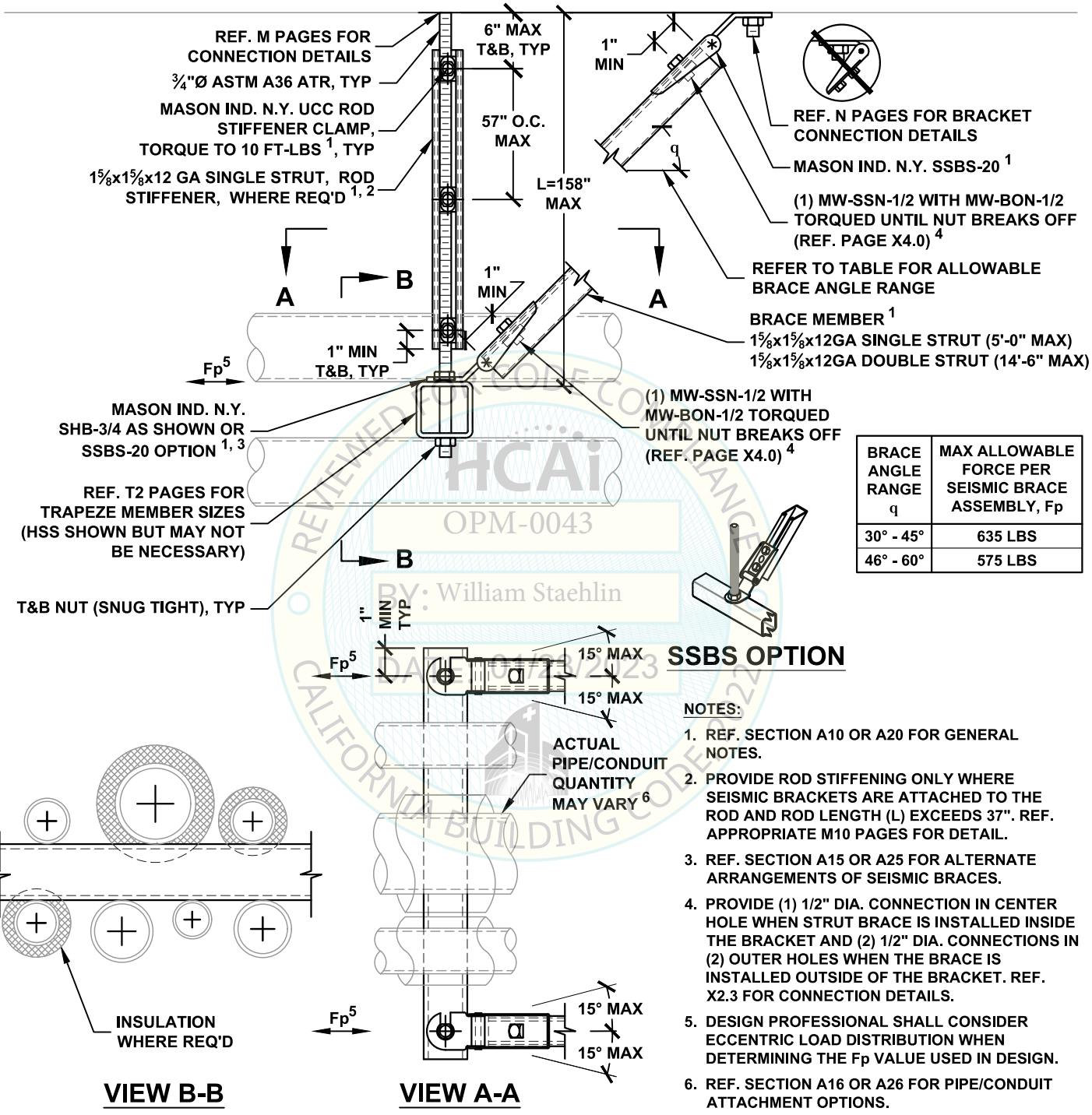

BRACE ANGLE RANGE q	MAX ALLOWABLE FORCE PER SEISMIC BRACE ASSEMBLY, Fp
30° - 45°	635 LBS
46° - 60°	575 LBS

REVIEWED FOR CODE COMPLIANCE
HCAi
OPM-0043
BY: William Staehlin
DATE: 01/23/2023
CALIFORNIA BUILDING CODE 2022

NOTES:

1. REF. SECTION A10 OR A20 FOR GENERAL NOTES.
2. PROVIDE ROD STIFFENING ONLY WHERE SEISMIC BRACKETS ARE ATTACHED TO THE ROD AND ROD LENGTH (L) EXCEEDS 37". REF. APPROPRIATE M10 PAGES FOR DETAIL.
3. REF. SECTION A15 OR A25 FOR ALTERNATE ARRANGEMENTS OF SEISMIC BRACES.
4. PROVIDE (1) 1/2" DIA. CONNECTION IN CENTER HOLE WHEN STRUT BRACE IS INSTALLED INSIDE THE BRACKET AND (2) 1/2" DIA. CONNECTIONS IN (2) OUTER HOLES WHEN THE BRACE IS INSTALLED OUTSIDE OF THE BRACKET. REF. X2.3 FOR CONNECTION DETAILS.
5. DESIGN PROFESSIONAL SHALL CONSIDER ECCENTRIC LOAD DISTRIBUTION WHEN DETERMINING THE Fp VALUE USED IN DESIGN.
6. REF. SECTION A16 OR A26 FOR PIPE/CONDUIT ATTACHMENT OPTIONS.

MASON WEST
1601 E. Miraloma Ave. Placentia, CA 92870
TEL (714) 630 - 0701, www.masonwest.com

Jiefu "Jeff" Zhang, SE
California SE No. S5270

PAGE
F1.41

HANGER ROD DIAMETER = ¾"	PIPING/CONDUIT ALL-DIRECTIONAL TRAPEZE SEISMIC SOLID BRACING SYSTEM 150 PLF MAX	KIT OPTIONS TS20A TSH620A

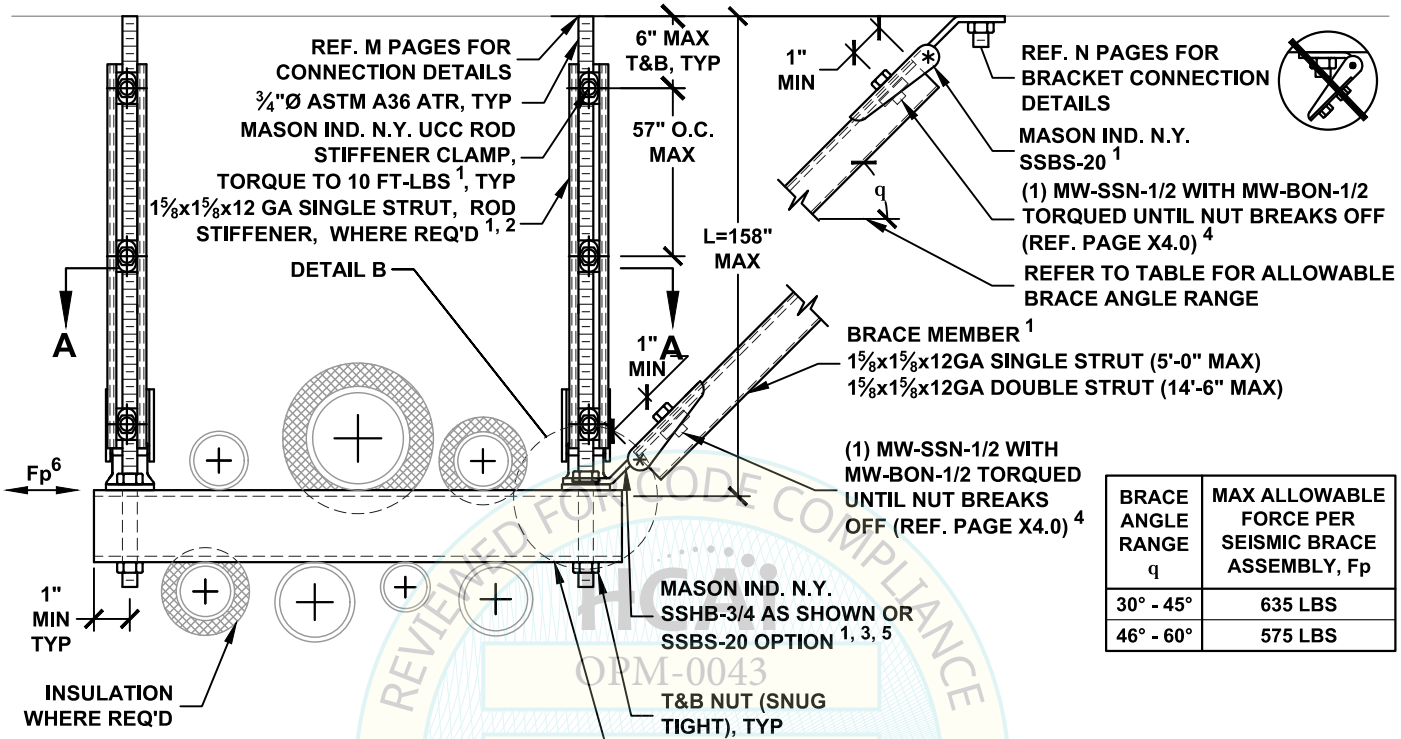

BRACE ANGLE RANGE q	MAX ALLOWABLE FORCE PER SEISMIC BRACE ASSEMBLY, Fp
30° - 45°	635 LBS
46° - 60°	575 LBS

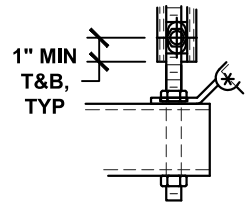

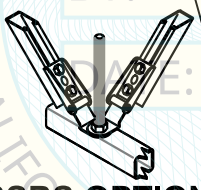

DETAIL B **SSBS OPTION**

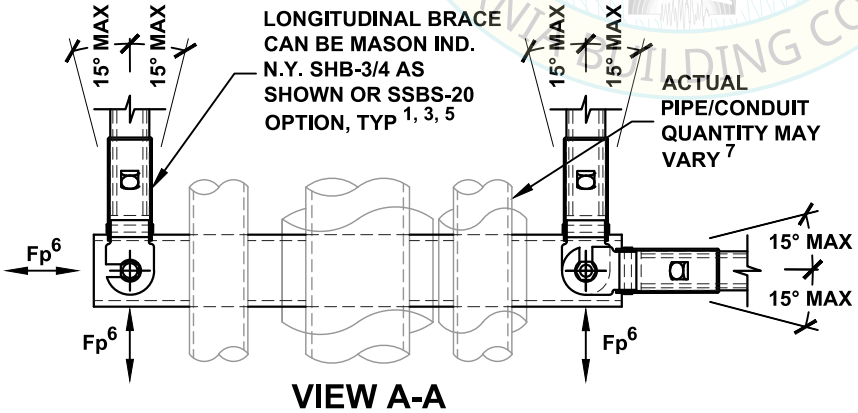

VIEW A-A

NOTES:

1. REF. SECTION A10 OR A20 FOR GENERAL NOTES.
2. PROVIDE ROD STIFFENING ONLY WHERE SEISMIC BRACKETS ARE ATTACHED TO THE ROD AND ROD LENGTH (L) EXCEEDS 37". REF. APPROPRIATE M10 PAGES FOR DETAIL.
3. REF. SECTION A15 OR A25 FOR ALTERNATE ARRANGEMENTS OF SEISMIC BRACES.
4. PROVIDE (1) 1/2" DIA. CONNECTION IN CENTER HOLE WHEN STRUT BRACE IS INSTALLED INSIDE THE BRACKET AND (2) 1/2" DIA. CONNECTIONS IN (2) OUTER HOLES WHEN THE BRACE IS INSTALLED OUTSIDE OF THE BRACKET. REF. X2.3 FOR CONNECTION DETAILS.
5. MW-KY-75 MUST BE USED ON TOP OF BOTTOM SHB WHEN STACKING (2) SHB ON THE SAME ROD. REF X2.4.
6. DESIGN PROFESSIONAL SHALL CONSIDER ECCENTRIC LOAD DISTRIBUTION WHEN DETERMINING THE Fp VALUE USED IN DESIGN.
7. REF. SECTION A16 OR A26 FOR PIPE/CONDUIT ATTACHMENT OPTIONS.

REVIEWED FOR CODE COMPLIANCE
CALIFORNIA BUILDING CODE
OPM-0043
BY: William Staehlin
DATE: 01/23/2023

MASON WEST
1601 E. Miraloma Ave. Placentia, CA 92870
TEL (714) 630 - 0701, www.masonwest.com

Jiefu "Jeff" Zhang, SE
California SE No. S5270

HANGER ROD DIAMETER = ¾"

PIPING/CONDUIT TRANSVERSE TRAPEZE SEISMIC SOLID BRACING SYSTEM 150 PLF MAX

KIT OPTIONS
TSH64T
TSH65T
TSH6T

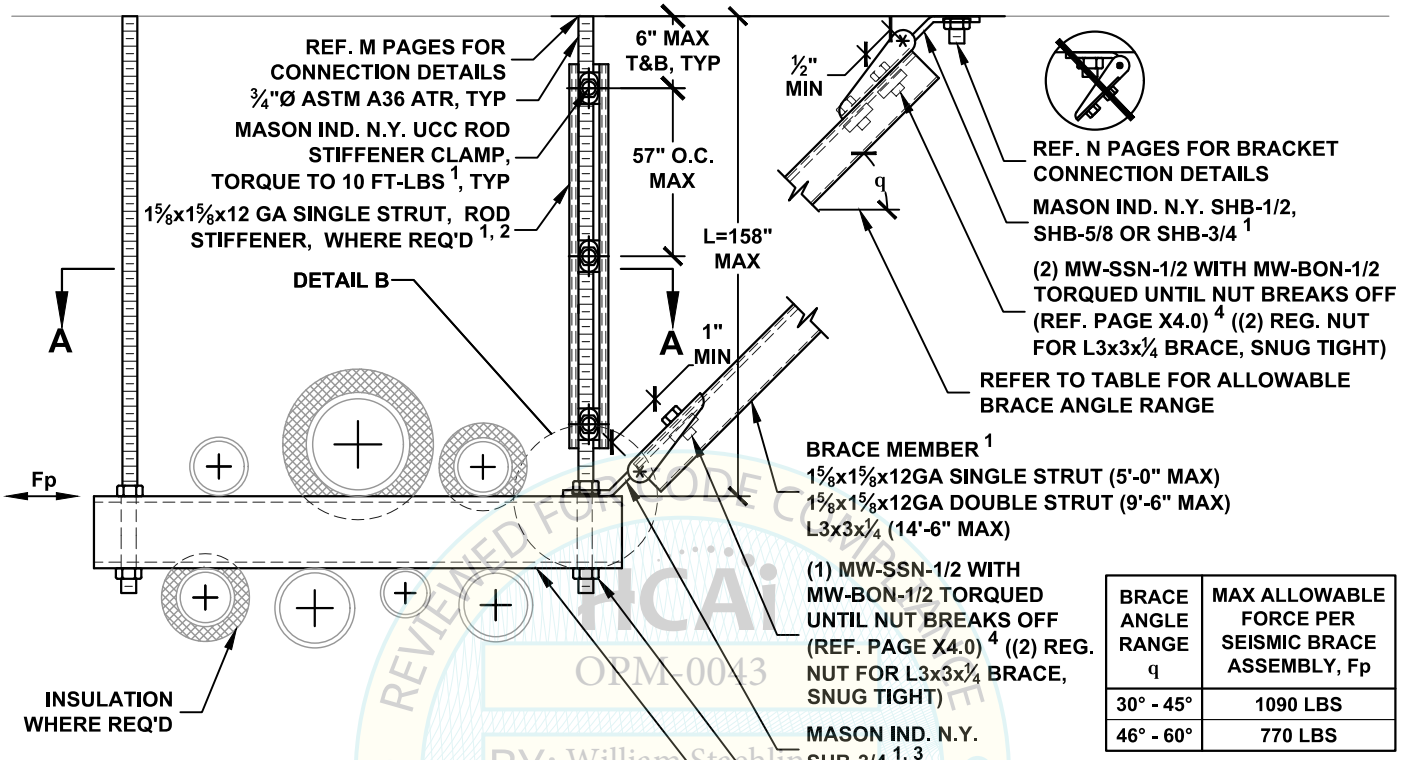

BRACE ANGLE RANGE q	MAX ALLOWABLE FORCE PER SEISMIC BRACE ASSEMBLY, Fp
30° - 45°	1090 LBS
46° - 60°	770 LBS

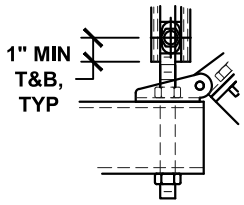

DETAIL B

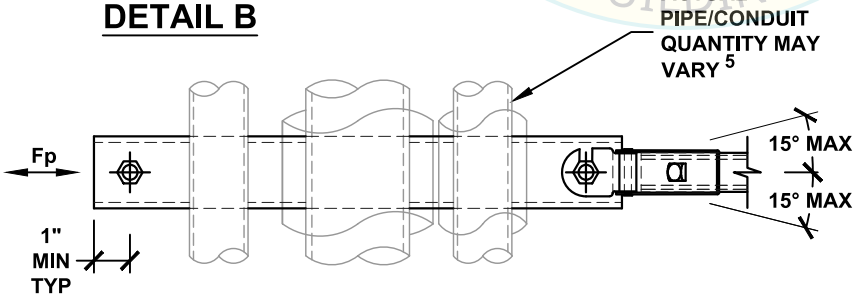

VIEW A-A

NOTES:

1. REF. SECTION A10 OR A20 FOR GENERAL NOTES. MAX ALLOWABLE FORCE, Fp, MAY BE LIMITED BY ANCHORAGE CAPACITY.
2. PROVIDE ROD STIFFENING ONLY WHERE SEISMIC BRACKETS ARE ATTACHED TO THE ROD AND ROD LENGTH (L) EXCEEDS 37". REF. APPROPRIATE M10 PAGES FOR DETAIL.
3. REF. SECTION A15 OR A25 FOR ALTERNATE ARRANGEMENTS OF SEISMIC BRACES.
4. PROVIDE (1) 1/2" DIA. CONNECTION IN CENTER HOLE WHEN STRUT BRACE IS INSTALLED INSIDE THE BRACKET AND (2) 1/2" DIA. CONNECTIONS IN (2) OUTER HOLES WHEN THE BRACE IS INSTALLED OUTSIDE OF THE BRACKET. REF. X2.3 FOR CONNECTION DETAILS.
5. REF. SECTION A16 OR A26 FOR PIPE/CONDUIT ATTACHMENT OPTIONS.

ICAi
OPM-0043
BY: William Staehlin
DATE: 01/23/2023
REVIEWED FOR CODE COMPLIANCE
CALIFORNIA BUILDING CODE 2019

MASON WEST
1601 E. Miraloma Ave. Placentia, CA 92870
TEL (714) 630 - 0701, www.masonwest.com

Jiefu "Jeff" Zhang, SE
California SE No. S5270

PAGE
F1.43

HANGER ROD DIAMETER = ¾"

PIPING/CONDUIT LONGITUDINAL TRAPEZE SEISMIC SOLID BRACING SYSTEM 150 PLF MAX

KIT OPTIONS
TSH64L
TSH65L
TSH6L

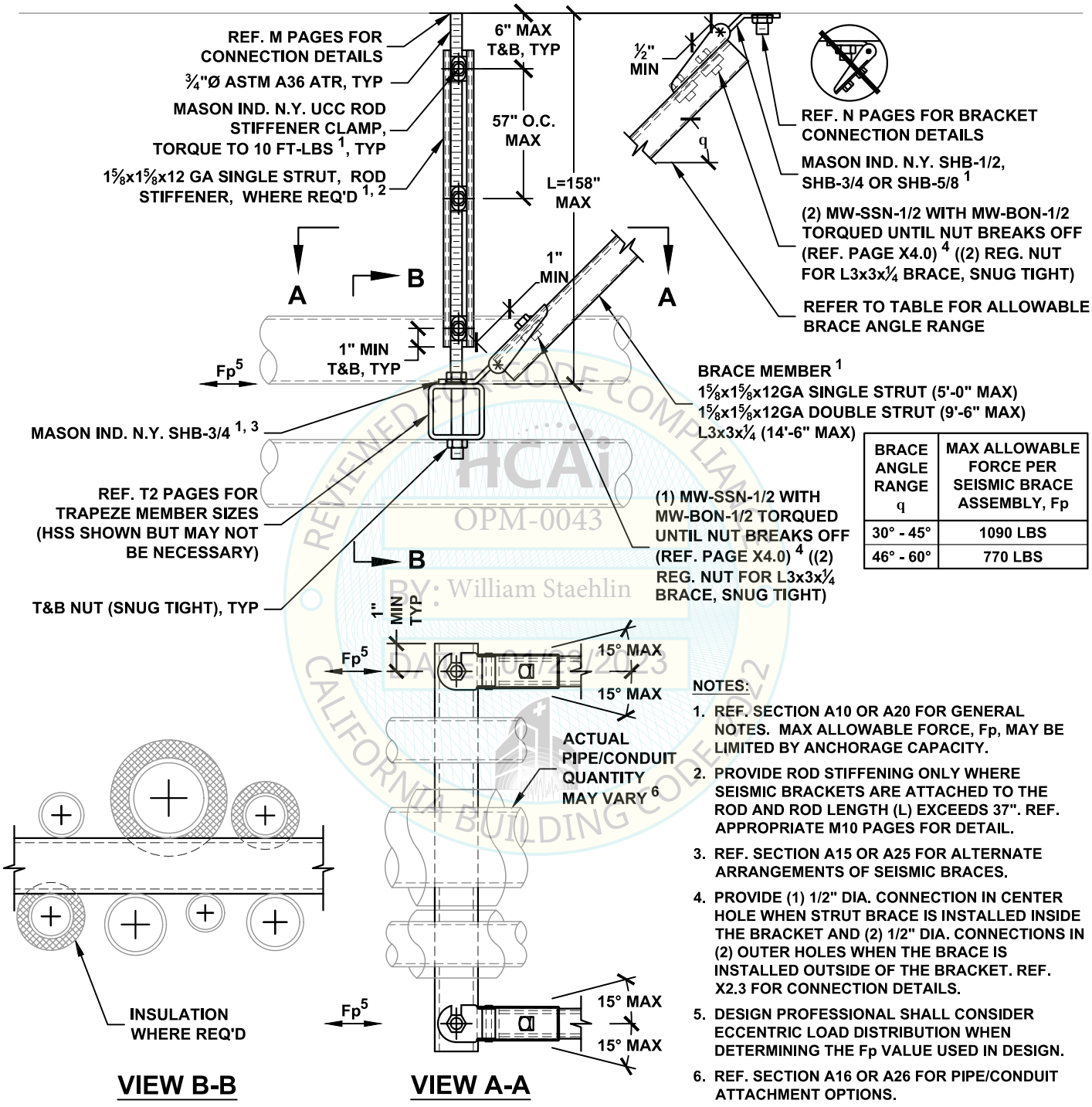

BRACE ANGLE RANGE q	MAX ALLOWABLE FORCE PER SEISMIC BRACE ASSEMBLY, Fp
30° - 45°	1090 LBS
46° - 60°	770 LBS

NOTES:

1. REF. SECTION A10 OR A20 FOR GENERAL NOTES. MAX ALLOWABLE FORCE, Fp, MAY BE LIMITED BY ANCHORAGE CAPACITY.
2. PROVIDE ROD STIFFENING ONLY WHERE SEISMIC BRACKETS ARE ATTACHED TO THE ROD AND ROD LENGTH (L) EXCEEDS 37". REF. APPROPRIATE M10 PAGES FOR DETAIL.
3. REF. SECTION A15 OR A25 FOR ALTERNATE ARRANGEMENTS OF SEISMIC BRACES.
4. PROVIDE (1) 1/2" DIA. CONNECTION IN CENTER HOLE WHEN STRUT BRACE IS INSTALLED INSIDE THE BRACKET AND (2) 1/2" DIA. CONNECTIONS IN (2) OUTER HOLES WHEN THE BRACE IS INSTALLED OUTSIDE OF THE BRACKET. REF. X2.3 FOR CONNECTION DETAILS.
5. DESIGN PROFESSIONAL SHALL CONSIDER ECCENTRIC LOAD DISTRIBUTION WHEN DETERMINING THE Fp VALUE USED IN DESIGN.
6. REF. SECTION A16 OR A26 FOR PIPE/CONDUIT ATTACHMENT OPTIONS.

HCAi
OPM-0043
BY: William Staehlin
DATE: 01/23/2023
REVIEWED FOR CODE COMPLIANCE
CALIFORNIA BUILDING CODE 2022

MASON WEST
1601 E. Miraloma Ave. Placentia, CA 92870
TEL (714) 630 - 0701, www.masonwest.com

Jiefu "Jeff" Zhang, SE
California SE No. S5270

HANGER ROD DIAMETER = ¾"

PIPING/CONDUIT ALL-DIRECTIONAL TRAPEZE SEISMIC SOLID BRACING SYSTEM 150 PLF MAX

KIT OPTIONS
TSH64A
TSH65A
TSH6A

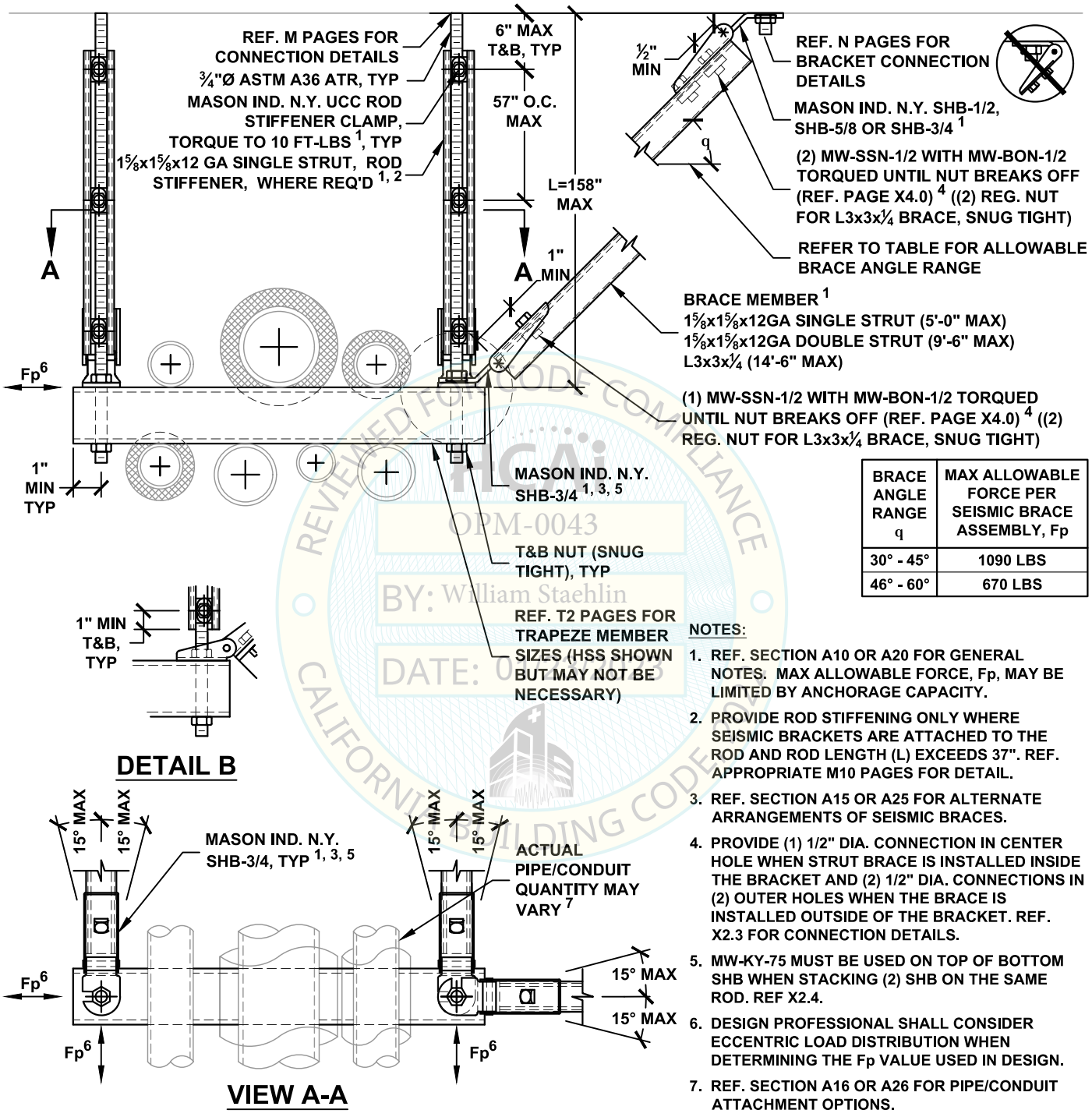

BRACE ANGLE RANGE q	MAX ALLOWABLE FORCE PER SEISMIC BRACE ASSEMBLY, Fp
30° - 45°	1090 LBS
46° - 60°	670 LBS

DETAIL B

VIEW A-A

NOTES:

1. REF. SECTION A10 OR A20 FOR GENERAL NOTES. MAX ALLOWABLE FORCE, Fp, MAY BE LIMITED BY ANCHORAGE CAPACITY.
2. PROVIDE ROD STIFFENING ONLY WHERE SEISMIC BRACKETS ARE ATTACHED TO THE ROD AND ROD LENGTH (L) EXCEEDS 37". REF. APPROPRIATE M10 PAGES FOR DETAIL.
3. REF. SECTION A15 OR A25 FOR ALTERNATE ARRANGEMENTS OF SEISMIC BRACES.
4. PROVIDE (1) 1/2" DIA. CONNECTION IN CENTER HOLE WHEN STRUT BRACE IS INSTALLED INSIDE THE BRACKET AND (2) 1/2" DIA. CONNECTIONS IN (2) OUTER HOLES WHEN THE BRACE IS INSTALLED OUTSIDE OF THE BRACKET. REF. X2.3 FOR CONNECTION DETAILS.
5. MW-KY-75 MUST BE USED ON TOP OF BOTTOM SHB WHEN STACKING (2) SHB ON THE SAME ROD. REF X2.4.
6. DESIGN PROFESSIONAL SHALL CONSIDER ECCENTRIC LOAD DISTRIBUTION WHEN DETERMINING THE Fp VALUE USED IN DESIGN.
7. REF. SECTION A16 OR A26 FOR PIPE/CONDUIT ATTACHMENT OPTIONS.

HCAi
OPM-0043
BY: William Staehlin
DATE: 0
REVIEWED FOR CODE COMPLIANCE
CALIFORNIA BUILDING CODE

MASON WEST
1601 E. Miraloma Ave. Placentia, CA 92870
TEL (714) 630 - 0701, www.masonwest.com

Jiefu "Jeff" Zhang, SE
California SE No. S5270

PAGE
F1.45

HANGER ROD DIAMETER = ¾"	PIPING/CONDUIT TRANSVERSE TRAPEZE SEISMIC SOLID BRACING SYSTEM 300 PLF MAX	KIT OPTIONS TS3T

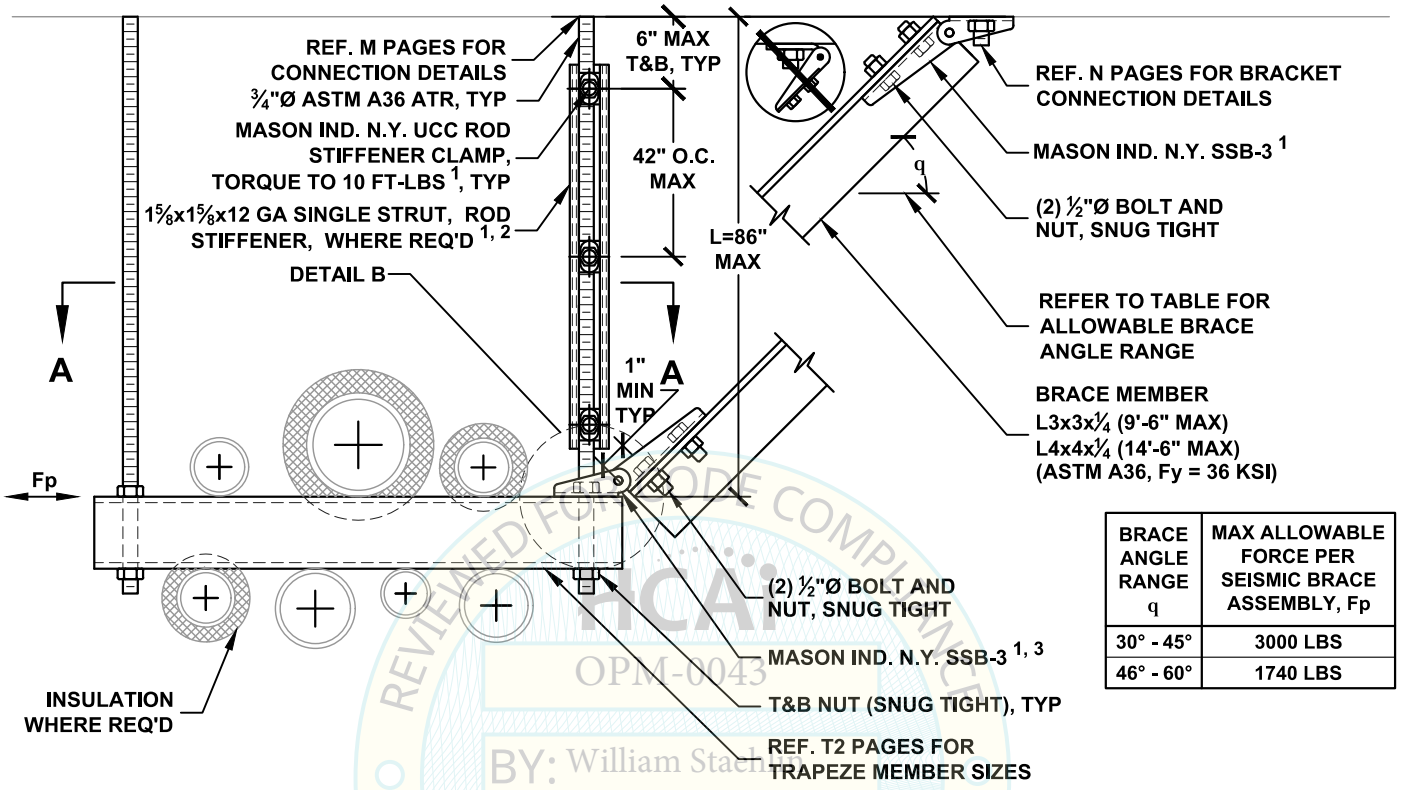

BRACE ANGLE RANGE q	MAX ALLOWABLE FORCE PER SEISMIC BRACE ASSEMBLY, Fp
30° - 45°	3000 LBS
46° - 60°	1740 LBS

REVIEWED FOR CODE COMPLIANCE
HCAI
OPM-0043
BY: William Staehlin
DATE: 01/23/2023
CALIFORNIA BUILDING CODE, 2022

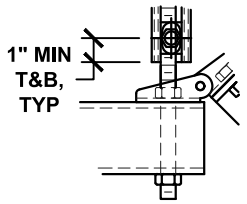

DETAIL B

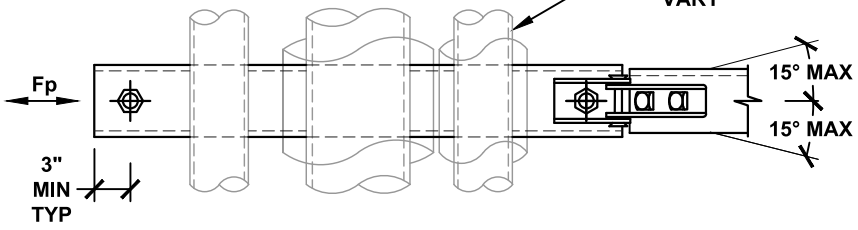

VIEW A-A

NOTES:

1. REF. SECTION A10 OR A20 FOR GENERAL NOTES.
2. PROVIDE ROD STIFFENING ONLY WHERE SEISMIC BRACKETS ARE ATTACHED TO THE ROD AND ROD LENGTH (L) EXCEEDS 27". REF. APPROPRIATE M10 PAGES FOR DETAIL.
3. REF. SECTION A15 OR A25 FOR ALTERNATE ARRANGEMENTS OF SEISMIC BRACES.
4. REF. SECTION A16 OR A26 FOR PIPE/CONDUIT ATTACHMENT OPTIONS.

MASON WEST
1601 E. Miraloma Ave. Placentia, CA 92870
TEL (714) 630 - 0701, www.masonwest.com

Jiefu "Jeff" Zhang, SE
California SE No. S5270

PAGE
F1.50

HANGER ROD DIAMETER = ¾"	PIPING/CONDUIT LONGITUDINAL TRAPEZE SEISMIC SOLID BRACING SYSTEM 300 PLF MAX	KIT OPTIONS TS3L

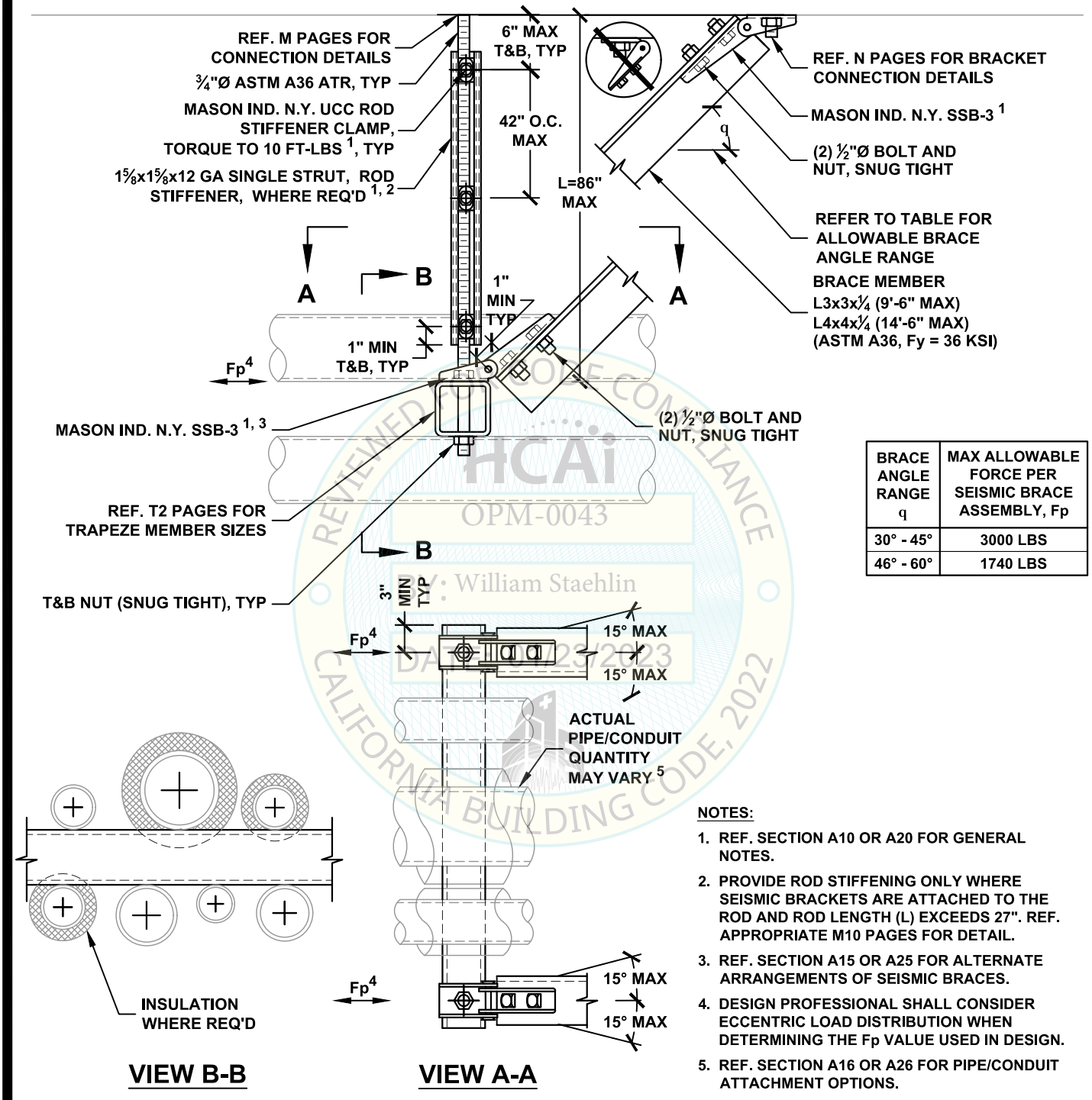

BRACE ANGLE RANGE q	MAX ALLOWABLE FORCE PER SEISMIC BRACE ASSEMBLY, Fp
30° - 45°	3000 LBS
46° - 60°	1740 LBS

REVIEWED FOR CODE COMPLIANCE CALIFORNIA BUILDING CODE, 2022
HCAi
OPM-0043
BY: William Staehlin
DATE: 1/23/2023

NOTES:

1. REF. SECTION A10 OR A20 FOR GENERAL NOTES.
2. PROVIDE ROD STIFFENING ONLY WHERE SEISMIC BRACKETS ARE ATTACHED TO THE ROD AND ROD LENGTH (L) EXCEEDS 27". REF. APPROPRIATE M10 PAGES FOR DETAIL.
3. REF. SECTION A15 OR A25 FOR ALTERNATE ARRANGEMENTS OF SEISMIC BRACES.
4. DESIGN PROFESSIONAL SHALL CONSIDER ECCENTRIC LOAD DISTRIBUTION WHEN DETERMINING THE Fp VALUE USED IN DESIGN.
5. REF. SECTION A16 OR A26 FOR PIPE/CONDUIT ATTACHMENT OPTIONS.

MASON WEST
1601 E. Miraloma Ave. Placentia, CA 92870
TEL (714) 630 - 0701, www.masonwest.com

Jiefu "Jeff" Zhang, SE
California SE No. S5270

PAGE
F1.51

HANGER ROD DIAMETER = ¾"	PIPING/CONDUIT ALL-DIRECTIONAL TRAPEZE SEISMIC SOLID BRACING SYSTEM 300 PLF MAX	KIT OPTIONS TS3A

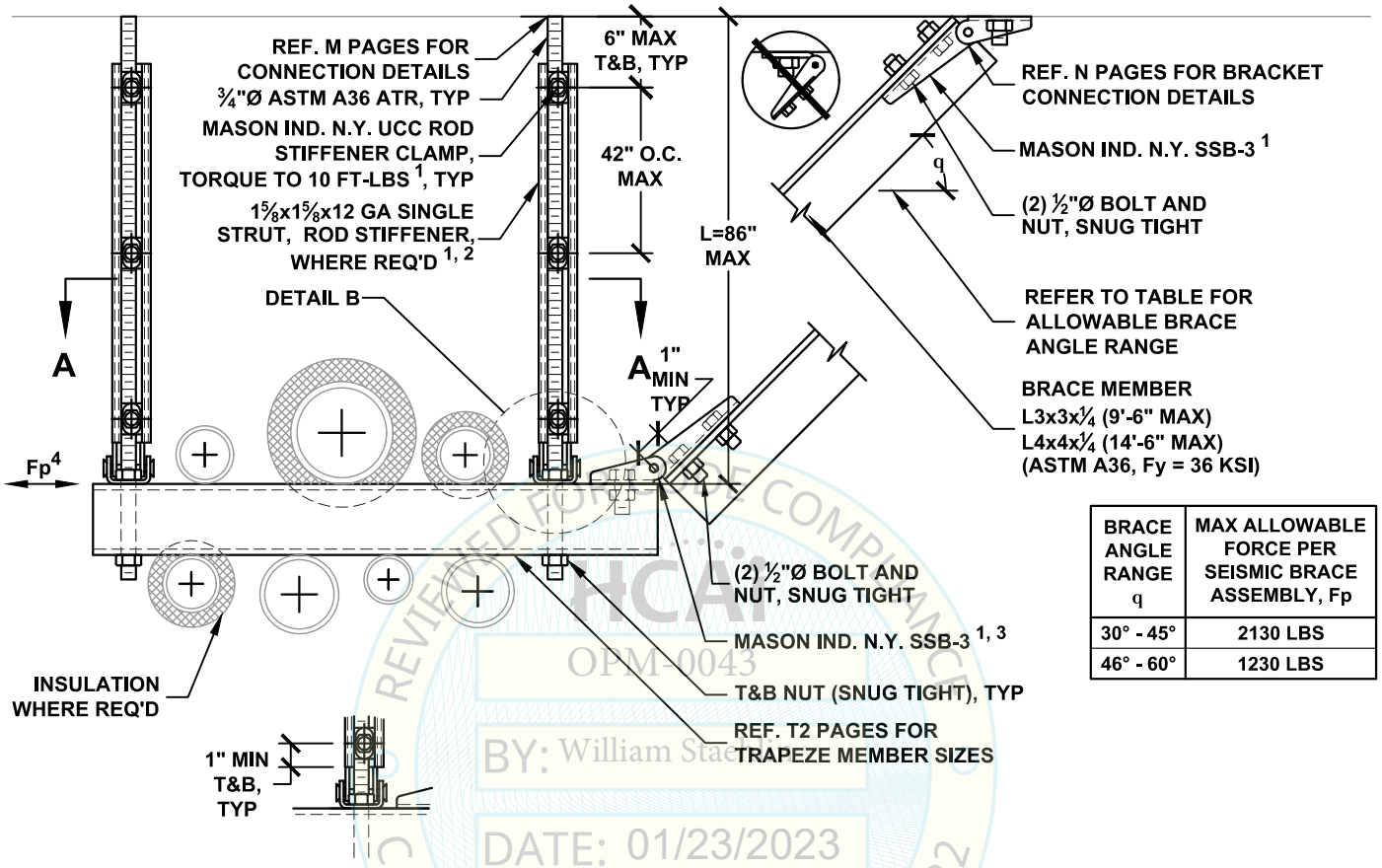

BRACE ANGLE RANGE q	MAX ALLOWABLE FORCE PER SEISMIC BRACE ASSEMBLY, Fp
30° - 45°	2130 LBS
46° - 60°	1230 LBS

DETAIL B

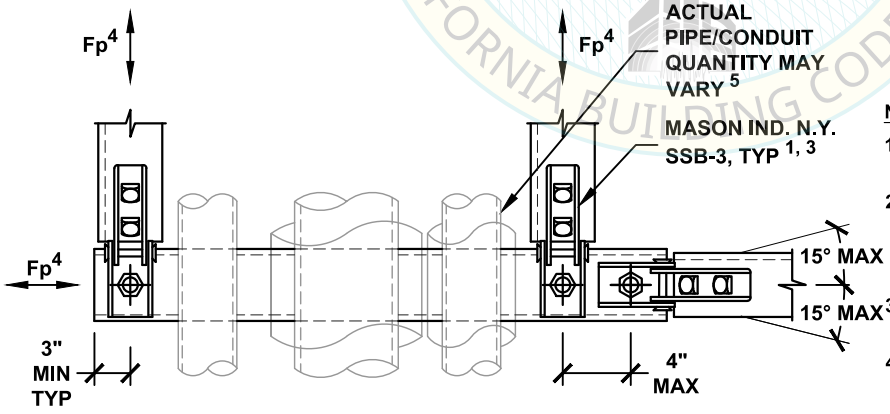

VIEW A-A

NOTES:

1. REF. SECTION A10 OR A20 FOR GENERAL NOTES.
2. PROVIDE ROD STIFFENING ONLY WHERE SEISMIC BRACKETS ARE ATTACHED TO THE ROD AND ROD LENGTH (L) EXCEEDS 27". REF. APPROPRIATE M10 PAGES FOR DETAIL.
3. REF. SECTION A15 OR A25 FOR ALTERNATE ARRANGEMENTS OF SEISMIC BRACES.
4. DESIGN PROFESSIONAL SHALL CONSIDER ECCENTRIC LOAD DISTRIBUTION WHEN DETERMINING THE Fp VALUE USED IN DESIGN.
5. REF. SECTION A16 OR A26 FOR PIPE/CONDUIT ATTACHMENT OPTIONS.

REVIEWED FOR CODE COMPLIANCE
HCAI
OPM-0043
BY: William Staehlin
DATE: 01/23/2023
CALIFORNIA BUILDING CODE, 2022

MASON WEST
1601 E. Miraloma Ave. Placentia, CA 92870
TEL (714) 630 - 0701, www.masonwest.com

Jiefu "Jeff" Zhang, SE
California SE No. S5270

HANGER ROD DIAMETER = ¾"	PIPING/CONDUIT TRANSVERSE TRAPEZE SEISMIC SOLID BRACING SYSTEM 300 PLF MAX	KIT OPTIONS TS3T

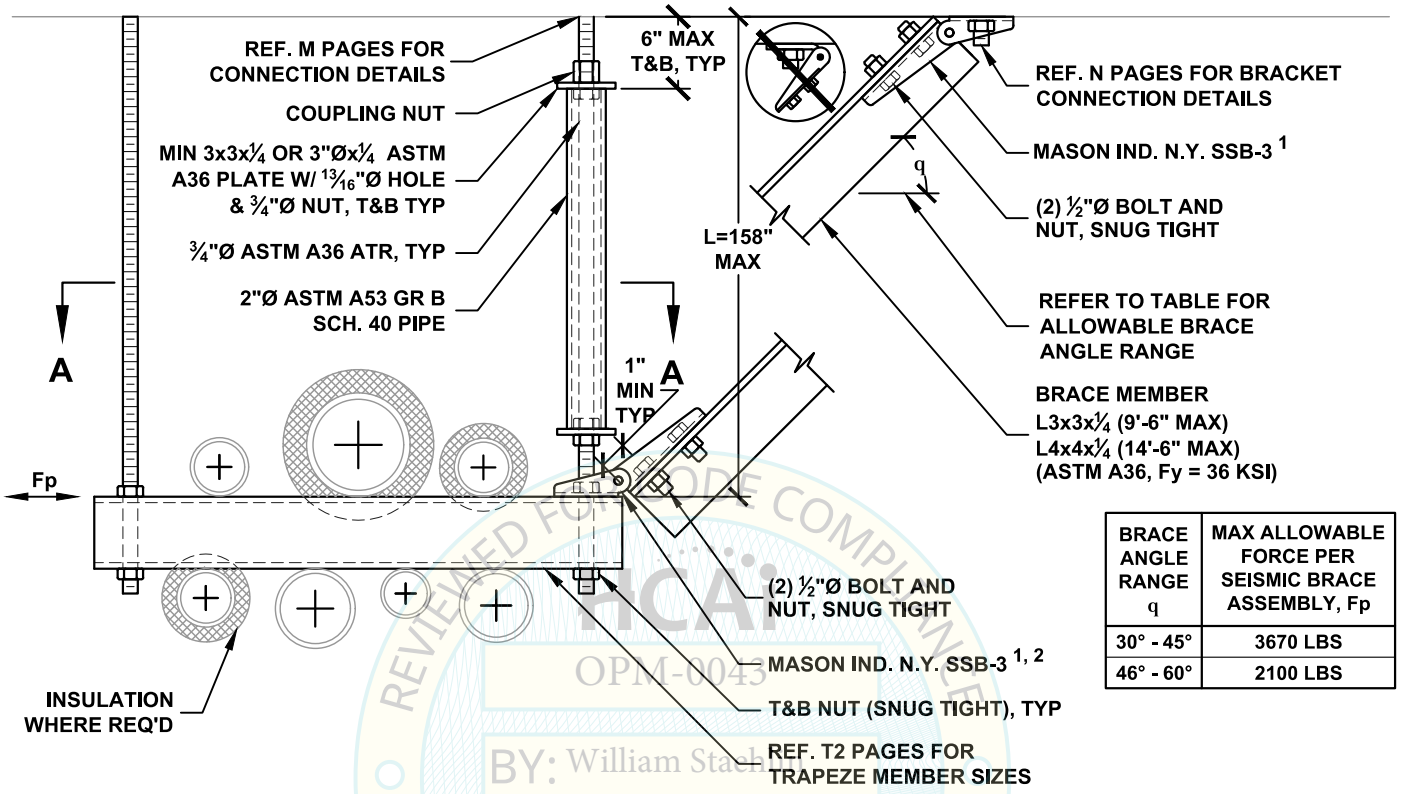

BRACE ANGLE RANGE q	MAX ALLOWABLE FORCE PER SEISMIC BRACE ASSEMBLY, Fp
30° - 45°	3670 LBS
46° - 60°	2100 LBS

REVIEWED FOR CODE COMPLIANCE
HCAI
OPM-0043
BY: William Staehlin
DATE: 01/23/2023
CALIFORNIA BUILDING CODE, 2022

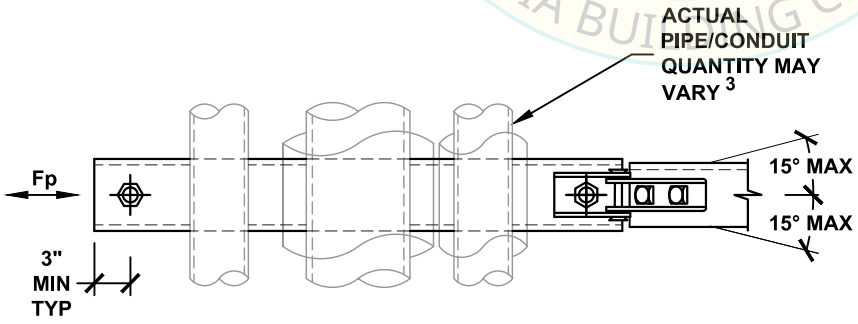

VIEW A-A

NOTES:

1. REF. SECTION A10 OR A20 FOR GENERAL NOTES.
2. REF. SECTION A15 OR A25 FOR ALTERNATE ARRANGEMENTS OF SEISMIC BRACES.
3. REF. SECTION A16 OR A26 FOR PIPE/CONDUIT ATTACHMENT OPTIONS.

MASON WEST
1601 E. Miraloma Ave. Placentia, CA 92870
TEL (714) 630 - 0701, www.masonwest.com

Jiefu "Jeff" Zhang, SE
California SE No. S5270

PAGE
F1.53

HANGER ROD DIAMETER = ¾"	PIPING/CONDUIT LONGITUDINAL TRAPEZE SEISMIC SOLID BRACING SYSTEM 300 PLF MAX	KIT OPTIONS TS3L

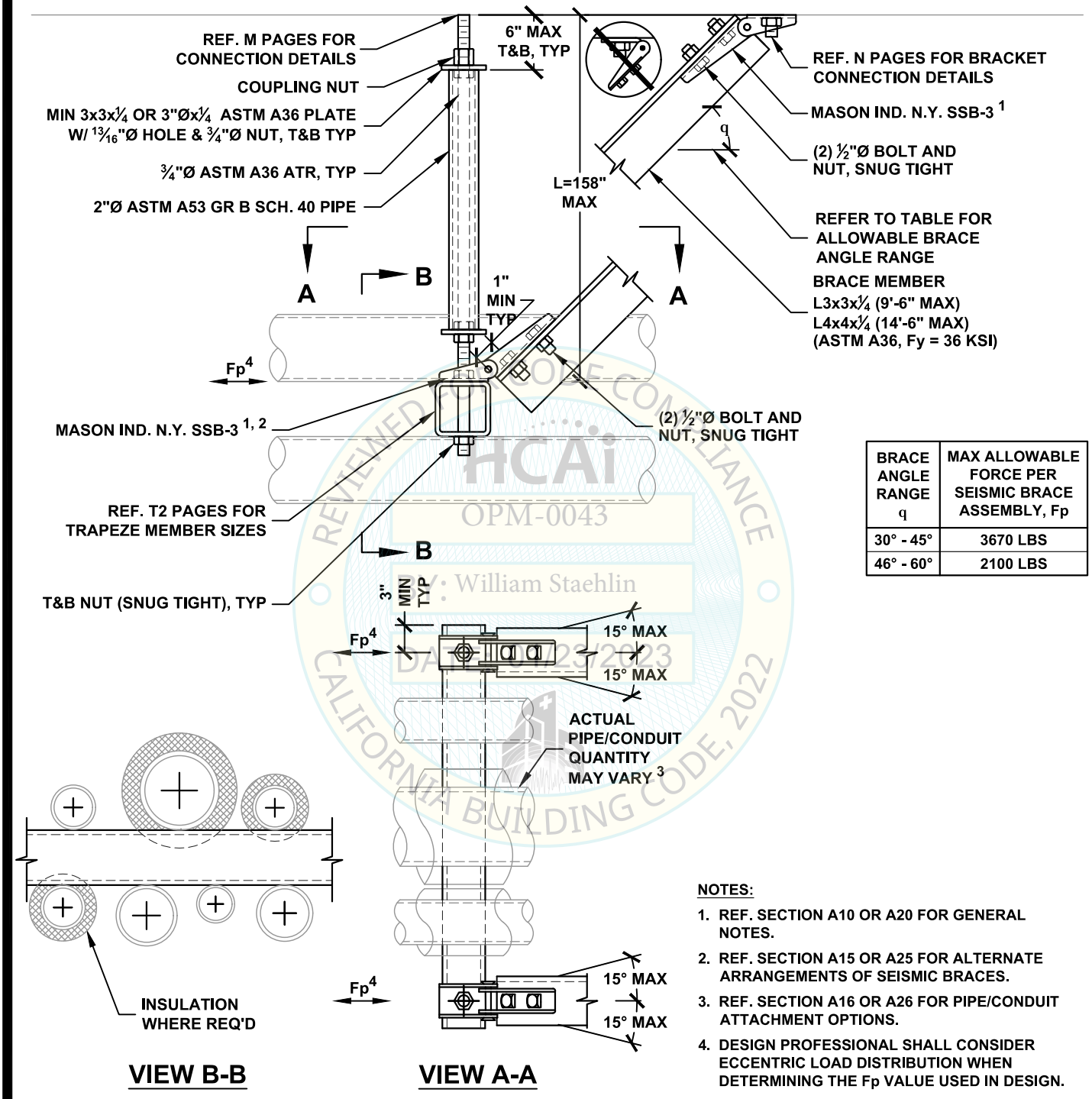

BRACE ANGLE RANGE q	MAX ALLOWABLE FORCE PER SEISMIC BRACE ASSEMBLY, Fp
30° - 45°	3670 LBS
46° - 60°	2100 LBS

VIEW B-B **VIEW A-A**

NOTES:

1. REF. SECTION A10 OR A20 FOR GENERAL NOTES.
2. REF. SECTION A15 OR A25 FOR ALTERNATE ARRANGEMENTS OF SEISMIC BRACES.
3. REF. SECTION A16 OR A26 FOR PIPE/CONDUIT ATTACHMENT OPTIONS.
4. DESIGN PROFESSIONAL SHALL CONSIDER ECCENTRIC LOAD DISTRIBUTION WHEN DETERMINING THE Fp VALUE USED IN DESIGN.

HCAi OPM-0043 BY: William Staehlin DATE: 01/23/2023 REVIEWED FOR CODE COMPLIANCE CALIFORNIA BUILDING CODE, 2022

MASON WEST
1601 E. Miraloma Ave. Placentia, CA 92870
TEL (714) 630 - 0701, www.masonwest.com

Jiefu "Jeff" Zhang, SE
California SE No. S5270

PAGE
F1.54

HANGER ROD DIAMETER = ¾"	PIPING/CONDUIT ALL-DIRECTIONAL TRAPEZE SEISMIC SOLID BRACING SYSTEM 300 PLF MAX	KIT OPTIONS TS3A

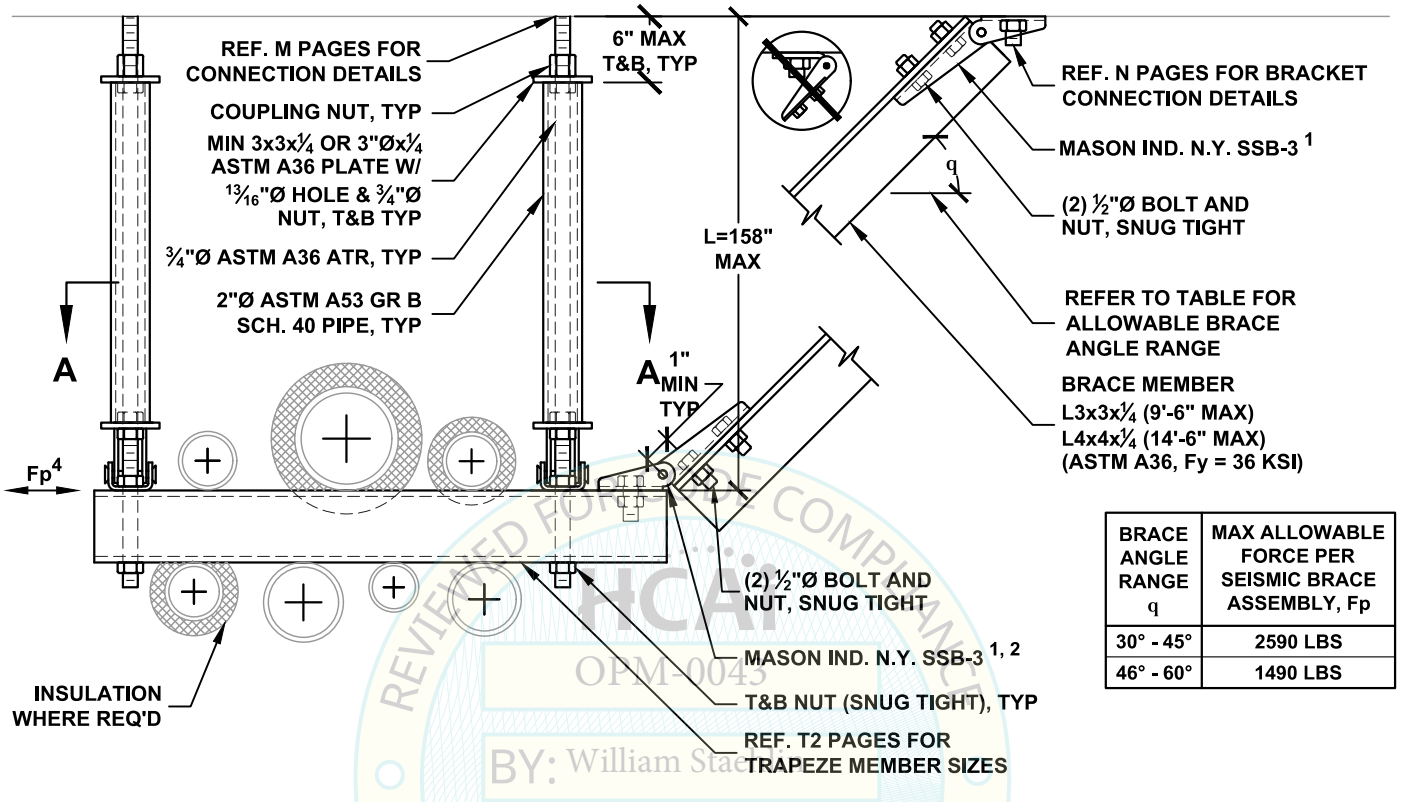

BRACE ANGLE RANGE q	MAX ALLOWABLE FORCE PER SEISMIC BRACE ASSEMBLY, Fp
30° - 45°	2590 LBS
46° - 60°	1490 LBS

HCAI
OPM-0043
BY: William Staehlin
DATE: 01/23/2023
REVIEWED FOR CODE COMPLIANCE
CALIFORNIA BUILDING CODE, 2022

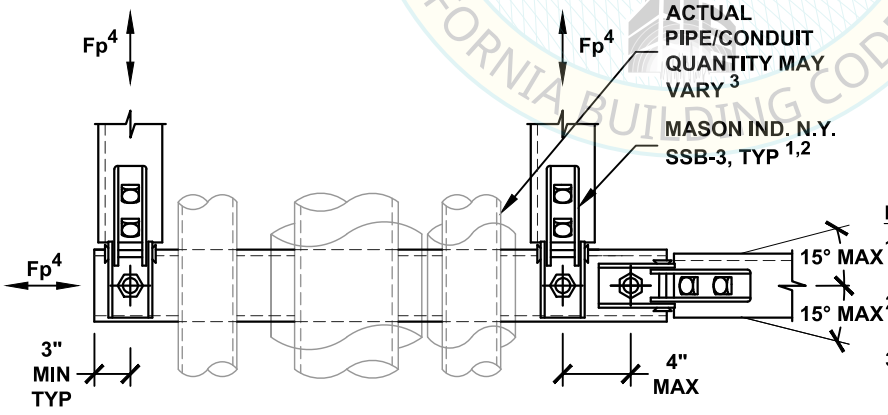

VIEW A-A

NOTES:

1. REF. SECTION A10 OR A20 FOR GENERAL NOTES.
2. REF. SECTION A15 OR A25 FOR ALTERNATE ARRANGEMENTS OF SEISMIC BRACES.
3. REF. SECTION A16 OR A26 FOR PIPE/CONDUIT ATTACHMENT OPTIONS.
4. DESIGN PROFESSIONAL SHALL CONSIDER ECCENTRIC LOAD DISTRIBUTION WHEN DETERMINING THE Fp VALUE USED IN DESIGN.

MASON WEST
1601 E. Miraloma Ave. Placentia, CA 92870
TEL (714) 630 - 0701, www.masonwest.com

Jiefu "Jeff" Zhang, SE
California SE No. S5270

HANGER ROD DIAMETER = 1"	PIPING/CONDUIT TRANSVERSE TRAPEZE SEISMIC SOLID BRACING SYSTEM 500 PLF MAX	KIT OPTIONS TS4T

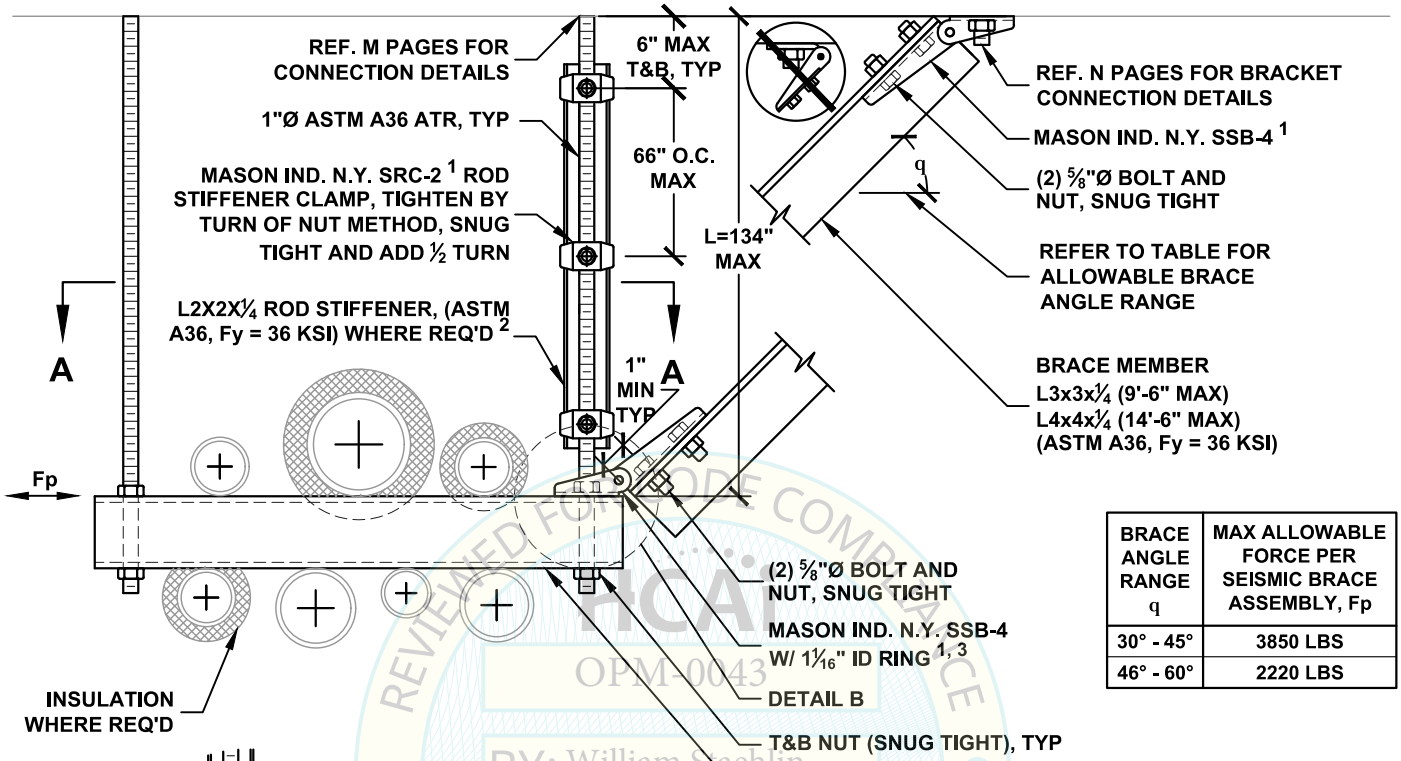

BRACE ANGLE RANGE q	MAX ALLOWABLE FORCE PER SEISMIC BRACE ASSEMBLY, Fp
30° - 45°	3850 LBS
46° - 60°	2220 LBS

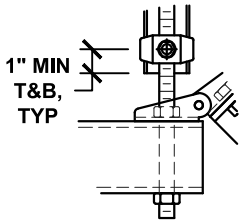

DETAIL B

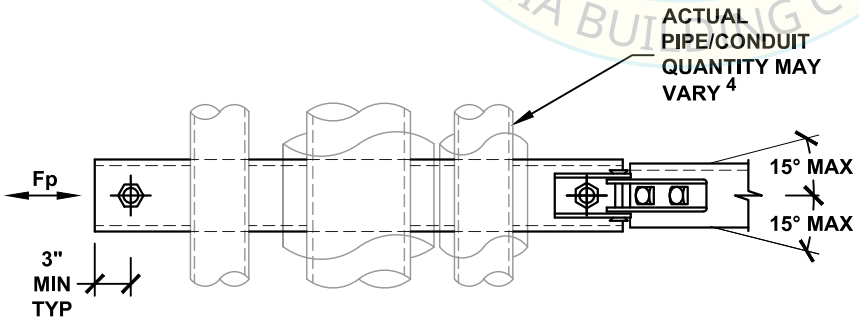

VIEW A-A

NOTES:

1. REF. SECTION A10 OR A20 FOR GENERAL NOTES.
2. PROVIDE ROD STIFFENING ONLY WHERE SEISMIC BRACKETS ARE ATTACHED TO THE ROD AND ROD LENGTH (L) EXCEEDS 43". REF. APPROPRIATE M10 PAGES FOR DETAIL.
3. REF. SECTION A15 OR A25 FOR ALTERNATE ARRANGEMENTS OF SEISMIC BRACES.
4. REF. SECTION A16 OR A26 FOR PIPE/CONDUIT ATTACHMENT OPTIONS.

REVIEWED FOR CODE COMPLIANCE
HCAI
OPM-0043
BY: William Staehlin
DATE: 01/23/2023
CALIFORNIA BUILDING CODE, 2022

MASON WEST
1601 E. Miraloma Ave. Placentia, CA 92870
TEL (714) 630 - 0701, www.masonwest.com

Jiefu "Jeff" Zhang, SE
California SE No. S5270

PAGE
F1.60

HANGER ROD DIAMETER = 1"	PIPING/CONDUIT LONGITUDINAL TRAPEZE SEISMIC SOLID BRACING SYSTEM 500 PLF MAX	KIT OPTIONS TS4L

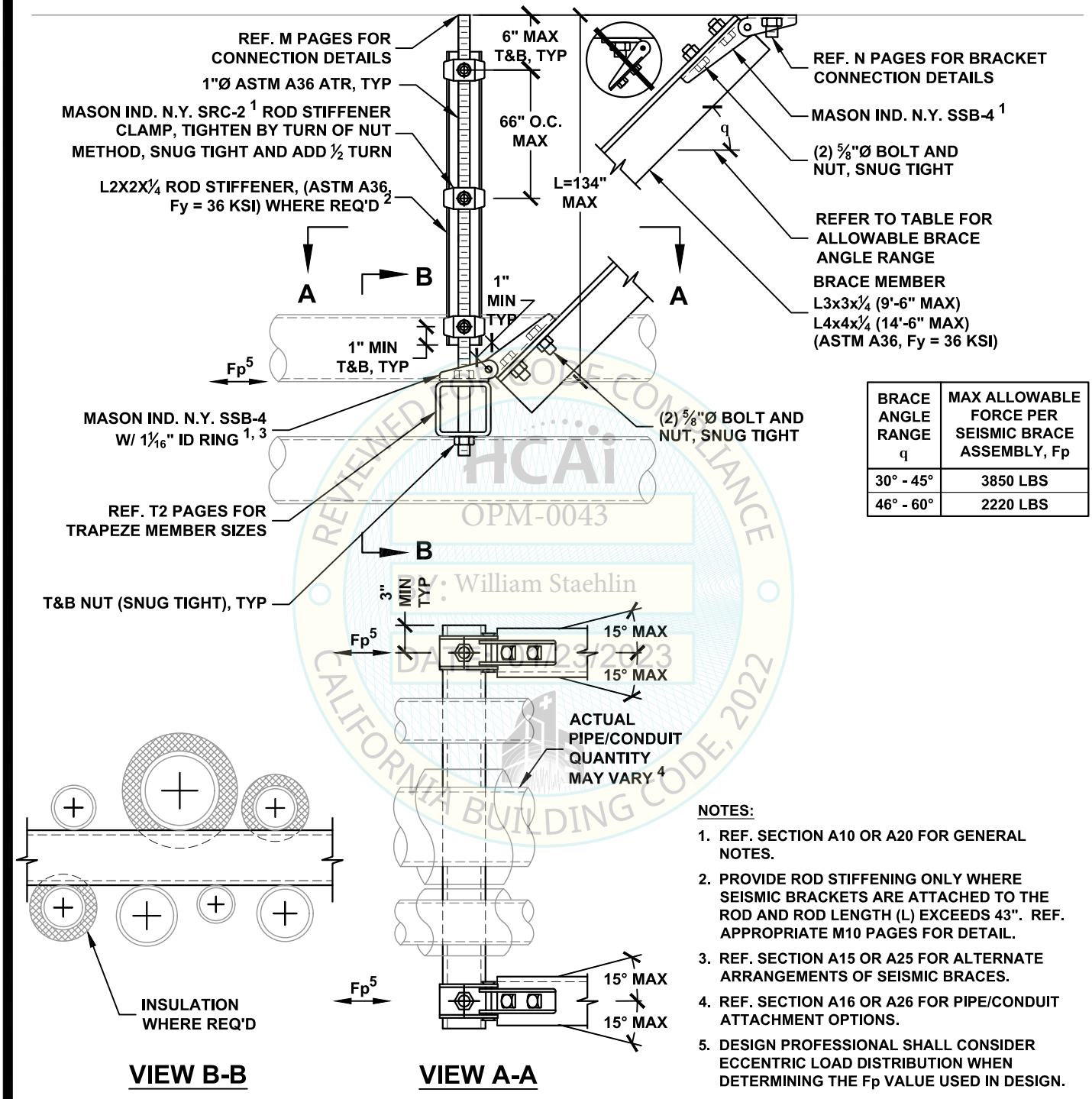

BRACE ANGLE RANGE q	MAX ALLOWABLE FORCE PER SEISMIC BRACE ASSEMBLY, Fp
30° - 45°	3850 LBS
46° - 60°	2220 LBS

HCAi
OPM-0043
BY: William Staehlin
DATE: 1/23/2023
REVIEWED FOR CODE COMPLIANCE
CALIFORNIA BUILDING CODE, 2022

NOTES:

1. REF. SECTION A10 OR A20 FOR GENERAL NOTES.
2. PROVIDE ROD STIFFENING ONLY WHERE SEISMIC BRACKETS ARE ATTACHED TO THE ROD AND ROD LENGTH (L) EXCEEDS 43". REF. APPROPRIATE M10 PAGES FOR DETAIL.
3. REF. SECTION A15 OR A25 FOR ALTERNATE ARRANGEMENTS OF SEISMIC BRACES.
4. REF. SECTION A16 OR A26 FOR PIPE/CONDUIT ATTACHMENT OPTIONS.
5. DESIGN PROFESSIONAL SHALL CONSIDER ECCENTRIC LOAD DISTRIBUTION WHEN DETERMINING THE Fp VALUE USED IN DESIGN.

MASON WEST
1601 E. Miraloma Ave. Placentia, CA 92870
TEL (714) 630 - 0701, www.masonwest.com

Jiefu "Jeff" Zhang, SE
California SE No. S5270

PAGE
F1.61

HANGER ROD DIAMETER = 1"	PIPING/CONDUIT ALL-DIRECTIONAL TRAPEZE SEISMIC SOLID BRACING SYSTEM 500 PLF MAX	KIT OPTIONS TS4A

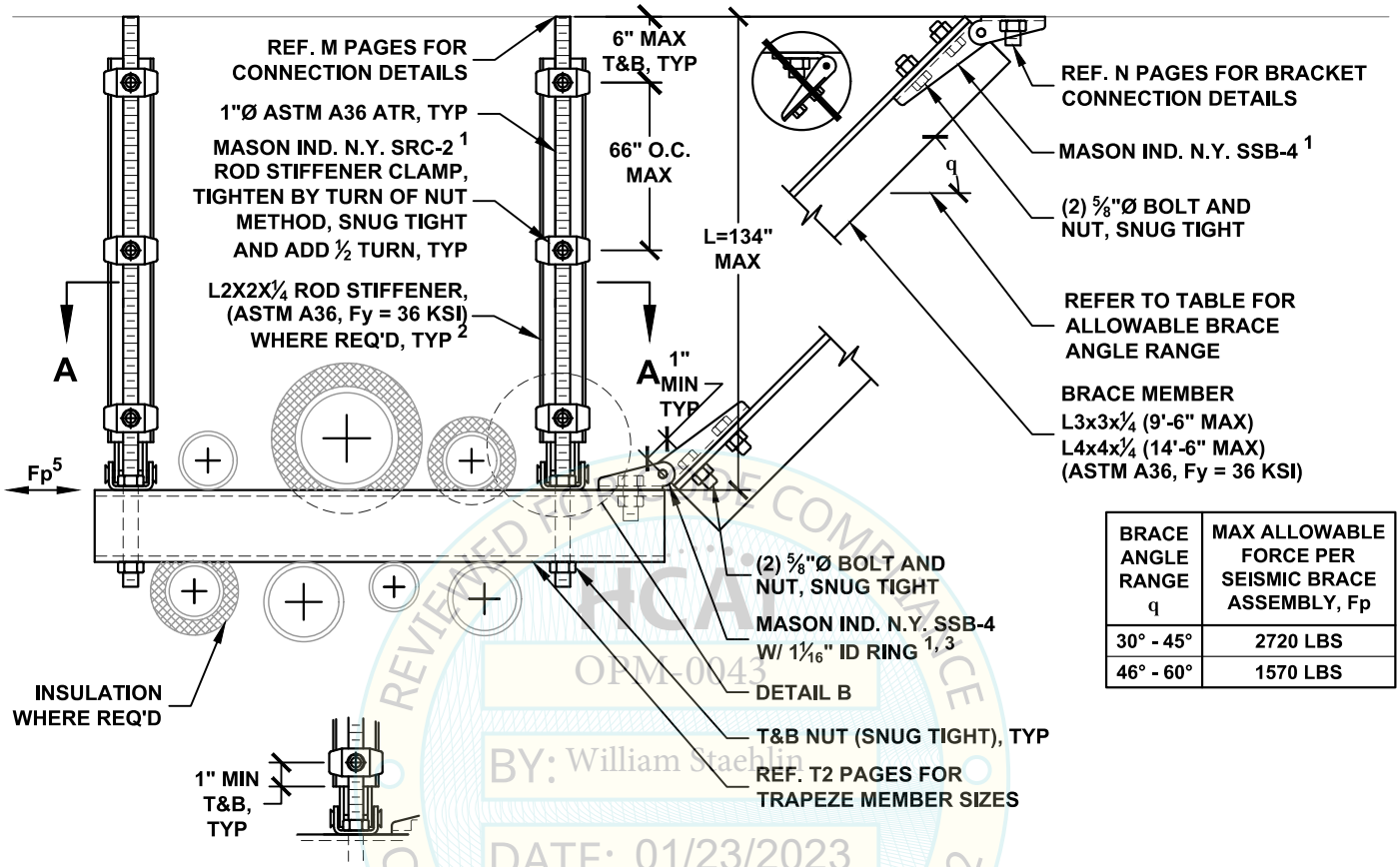

BRACE ANGLE RANGE q	MAX ALLOWABLE FORCE PER SEISMIC BRACE ASSEMBLY, Fp
30° - 45°	2720 LBS
46° - 60°	1570 LBS

DETAIL B

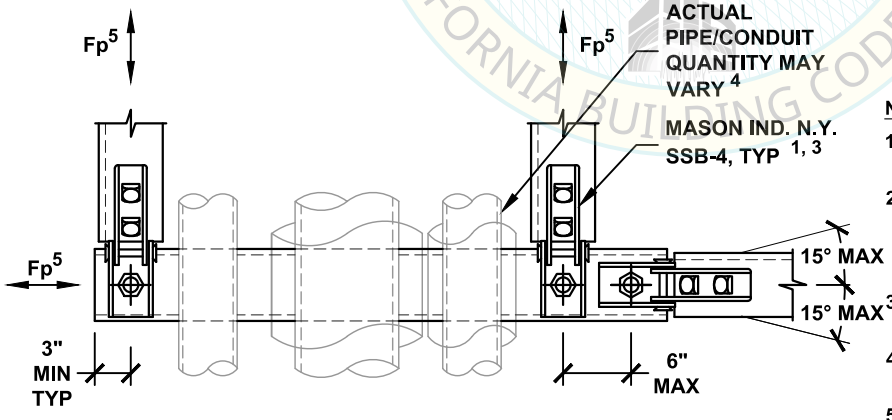

VIEW A-A

NOTES:

1. REF. SECTION A10 OR A20 FOR GENERAL NOTES.
2. PROVIDE ROD STIFFENING ONLY WHERE SEISMIC BRACKETS ARE ATTACHED TO THE ROD AND ROD LENGTH (L) EXCEEDS 43". REF. APPROPRIATE M10 PAGES FOR DETAIL.
3. REF. SECTION A15 OR A25 FOR ALTERNATE ARRANGEMENTS OF SEISMIC BRACES.
4. REF. SECTION A16 OR A26 FOR PIPE/CONDUIT ATTACHMENT OPTIONS.
5. DESIGN PROFESSIONAL SHALL CONSIDER ECCENTRIC LOAD DISTRIBUTION WHEN DETERMINING THE Fp VALUE USED IN DESIGN.

REVIEWED FOR CODE COMPLIANCE
HCAI
OPM-0043
BY: William Staehlin
DATE: 01/23/2023
CALIFORNIA BUILDING CODE, 2022

MASON WEST
1601 E. Miraloma Ave. Placentia, CA 92870
TEL (714) 630 - 0701, www.masonwest.com

Jiefu "Jeff" Zhang, SE
California SE No. S5270

PAGE
F1.62

HANGER ROD DIAMETER = 1¼"	PIPING/CONDUIT TRANSVERSE TRAPEZE SEISMIC SOLID BRACING SYSTEM 500 PLF MAX	KIT OPTIONS TS4T

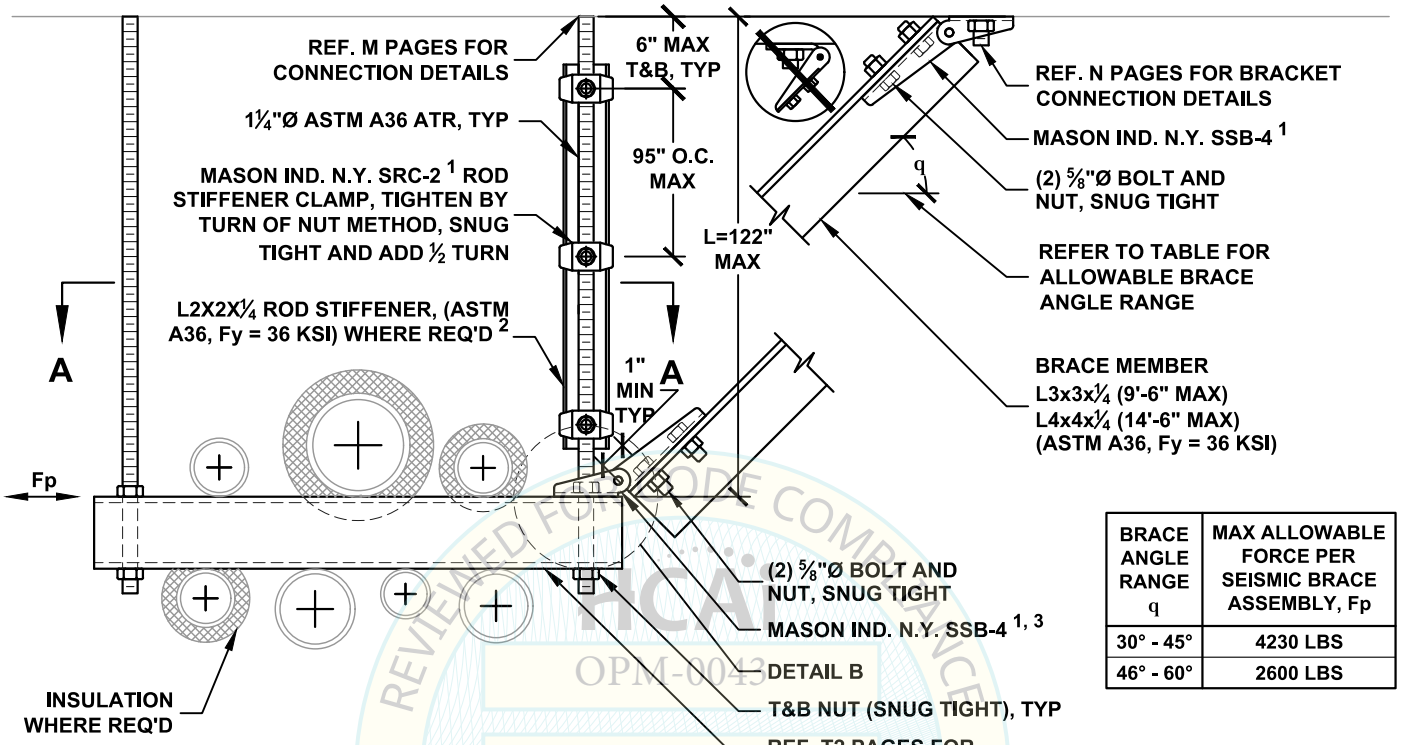

BRACE ANGLE RANGE q	MAX ALLOWABLE FORCE PER SEISMIC BRACE ASSEMBLY, Fp
30° - 45°	4230 LBS
46° - 60°	2600 LBS

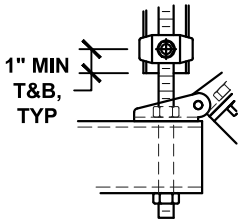

DETAIL B

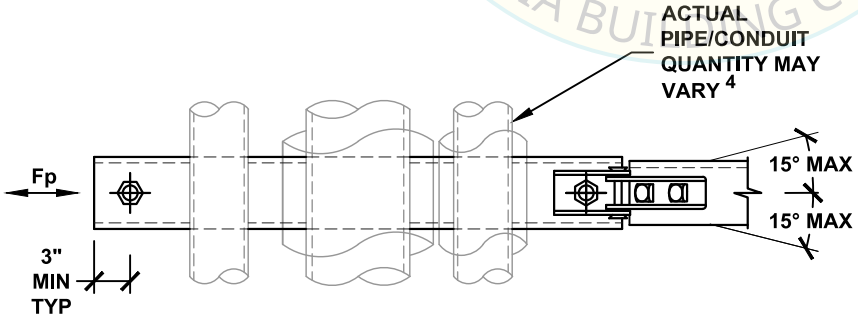

VIEW A-A

NOTES:

1. REF. SECTION A10 OR A20 FOR GENERAL NOTES.
2. PROVIDE ROD STIFFENING ONLY WHERE SEISMIC BRACKETS ARE ATTACHED TO THE ROD AND ROD LENGTH (L) EXCEEDS 62". REF. APPROPRIATE M10 PAGES FOR DETAIL.
3. REF. SECTION A15 OR A25 FOR ALTERNATE ARRANGEMENTS OF SEISMIC BRACES.
4. REF. SECTION A16 OR A26 FOR PIPE/CONDUIT ATTACHMENT OPTIONS.

REVIEWED FOR CODE COMPLIANCE
HCAI
OPM-0043
BY: William Staehlin
DATE: 01/23/2023
CALIFORNIA BUILDING CODE, 2022

MASON WEST
1601 E. Miraloma Ave. Placentia, CA 92870
TEL (714) 630 - 0701, www.masonwest.com

Jiefu "Jeff" Zhang, SE
California SE No. S5270

PAGE
F1.70

HANGER ROD DIAMETER = 1¼"

PIPING/CONDUIT LONGITUDINAL TRAPEZE SEISMIC SOLID BRACING SYSTEM 500 PLF MAX

KIT OPTIONS
TS4L

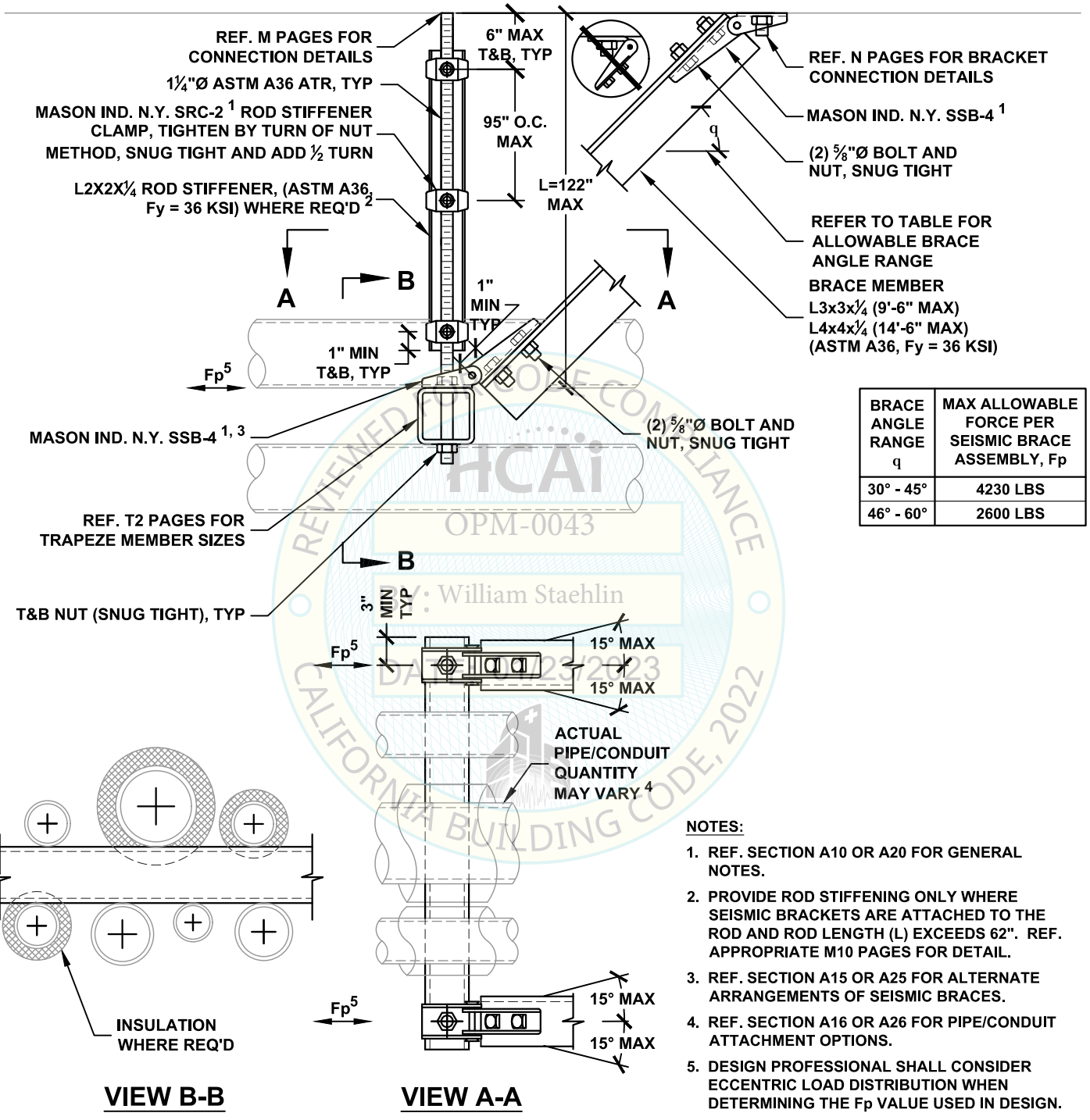

BRACE ANGLE RANGE q	MAX ALLOWABLE FORCE PER SEISMIC BRACE ASSEMBLY, Fp
30° - 45°	4230 LBS
46° - 60°	2600 LBS

VIEW B-B

VIEW A-A

NOTES:

1. REF. SECTION A10 OR A20 FOR GENERAL NOTES.
2. PROVIDE ROD STIFFENING ONLY WHERE SEISMIC BRACKETS ARE ATTACHED TO THE ROD AND ROD LENGTH (L) EXCEEDS 62". REF. APPROPRIATE M10 PAGES FOR DETAIL.
3. REF. SECTION A15 OR A25 FOR ALTERNATE ARRANGEMENTS OF SEISMIC BRACES.
4. REF. SECTION A16 OR A26 FOR PIPE/CONDUIT ATTACHMENT OPTIONS.
5. DESIGN PROFESSIONAL SHALL CONSIDER ECCENTRIC LOAD DISTRIBUTION WHEN DETERMINING THE Fp VALUE USED IN DESIGN.

HCAi
OPM-0043
BY: William Staehlin
DATE: 1/23/2023
REVIEWED FOR CODE COMPLIANCE
CALIFORNIA BUILDING CODE, 2022

MASON WEST
1601 E. Miraloma Ave. Placentia, CA 92870
TEL (714) 630 - 0701, www.masonwest.com

Jiefu "Jeff" Zhang, SE
California SE No. S5270

PAGE
F1.71

HANGER ROD DIAMETER = 1¼"

PIPING/CONDUIT ALL-DIRECTIONAL TRAPEZE SEISMIC SOLID BRACING SYSTEM 500 PLF MAX

KIT OPTIONS
TS4A

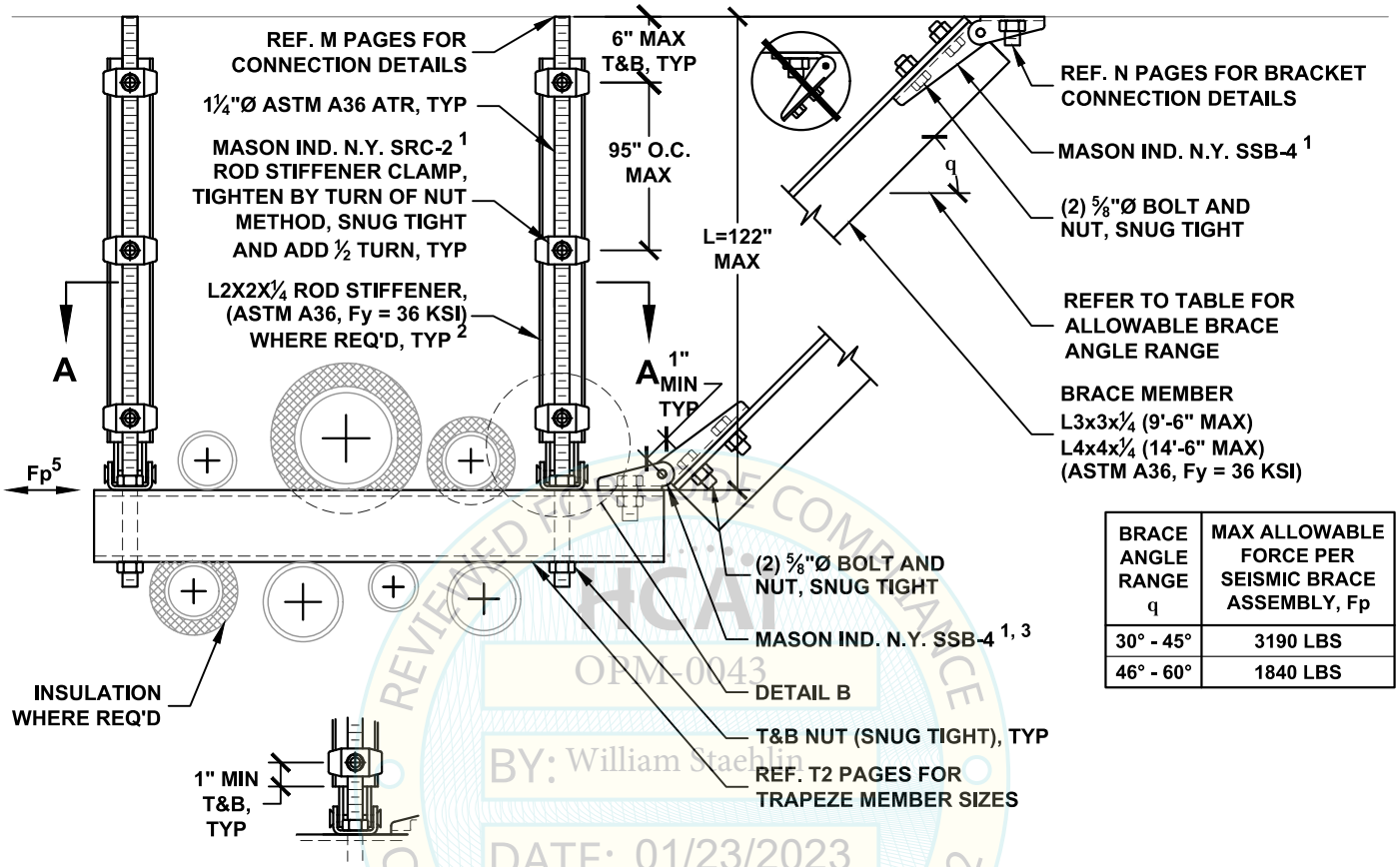

BRACE ANGLE RANGE q	MAX ALLOWABLE FORCE PER SEISMIC BRACE ASSEMBLY, Fp
30° - 45°	3190 LBS
46° - 60°	1840 LBS

DETAIL B

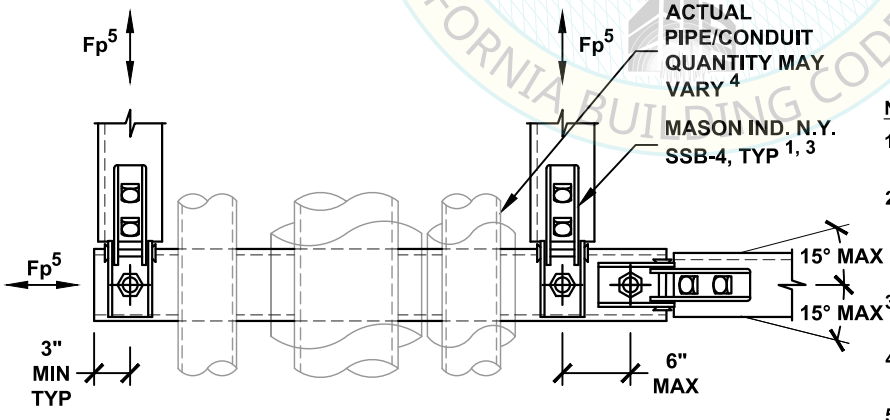

VIEW A-A

NOTES:

1. REF. SECTION A10 OR A20 FOR GENERAL NOTES.
2. PROVIDE ROD STIFFENING ONLY WHERE SEISMIC BRACKETS ARE ATTACHED TO THE ROD AND ROD LENGTH (L) EXCEEDS 62". REF. APPROPRIATE M10 PAGES FOR DETAIL.
3. REF. SECTION A15 OR A25 FOR ALTERNATE ARRANGEMENTS OF SEISMIC BRACES.
4. REF. SECTION A16 OR A26 FOR PIPE/CONDUIT ATTACHMENT OPTIONS.
5. DESIGN PROFESSIONAL SHALL CONSIDER ECCENTRIC LOAD DISTRIBUTION WHEN DETERMINING THE Fp VALUE USED IN DESIGN.

REVIEWED FOR CODE COMPLIANCE
CALIFORNIA BUILDING CODE, 2022
IAPMO UES
OPM-0043
BY: William Staehlin
DATE: 01/23/2023

MASON WEST
1601 E. Miraloma Ave. Placentia, CA 92870
TEL (714) 630 - 0701, www.masonwest.com

Jiefu "Jeff" Zhang, SE
California SE No. S5270

PAGE
F1.72

HANGER ROD DIAMETER = 1¼"	PIPING/CONDUIT TRANSVERSE TRAPEZE SEISMIC SOLID BRACING SYSTEM 500 PLF MAX	KIT OPTIONS TS4T

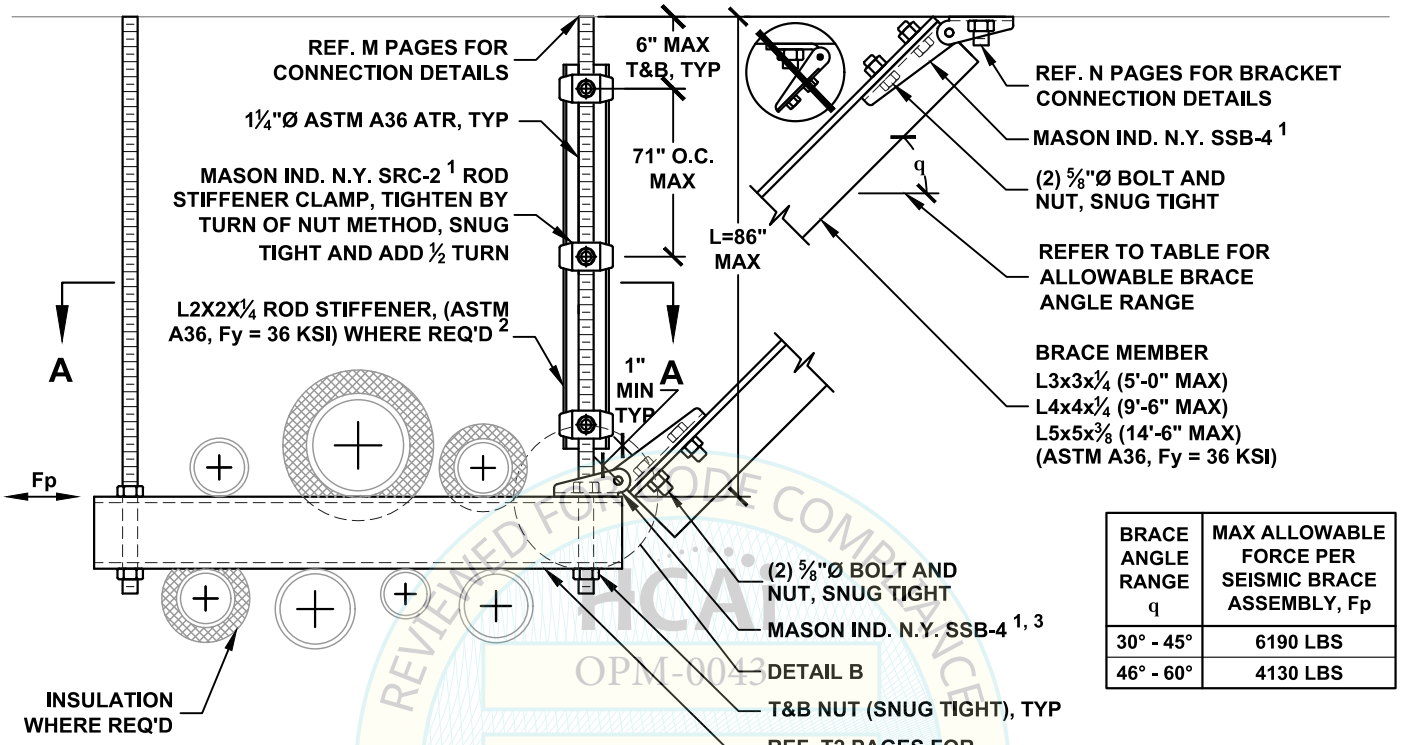

BRACE ANGLE RANGE q	MAX ALLOWABLE FORCE PER SEISMIC BRACE ASSEMBLY, Fp
30° - 45°	6190 LBS
46° - 60°	4130 LBS

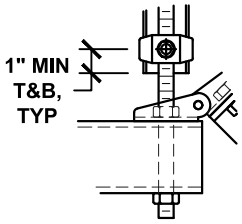

DETAIL B

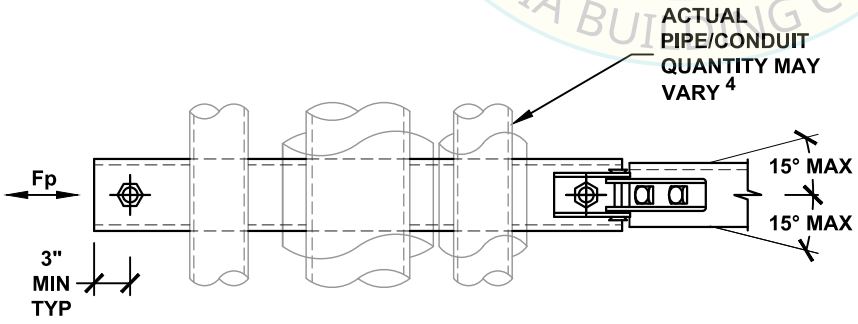

VIEW A-A

NOTES:

1. REF. SECTION A10 OR A20 FOR GENERAL NOTES.
2. PROVIDE ROD STIFFENING ONLY WHERE SEISMIC BRACKETS ARE ATTACHED TO THE ROD AND ROD LENGTH (L) EXCEEDS 46". REF. APPROPRIATE M10 PAGES FOR DETAIL.
3. REF. SECTION A15 OR A25 FOR ALTERNATE ARRANGEMENTS OF SEISMIC BRACES.
4. REF. SECTION A16 OR A26 FOR PIPE/CONDUIT ATTACHMENT OPTIONS.

REVIEWED FOR CODE COMPLIANCE
HCAI
OPM-0043
BY: William Staehlin
DATE: 01/23/2023
CALIFORNIA BUILDING CODE, 2022

MASON WEST
1601 E. Miraloma Ave. Placentia, CA 92870
TEL (714) 630 - 0701, www.masonwest.com

Jiefu "Jeff" Zhang, SE
California SE No. S5270

PAGE
F1.73

HANGER ROD DIAMETER = 1¼"	PIPING/CONDUIT LONGITUDINAL TRAPEZE SEISMIC SOLID BRACING SYSTEM 500 PLF MAX	KIT OPTIONS TS4L

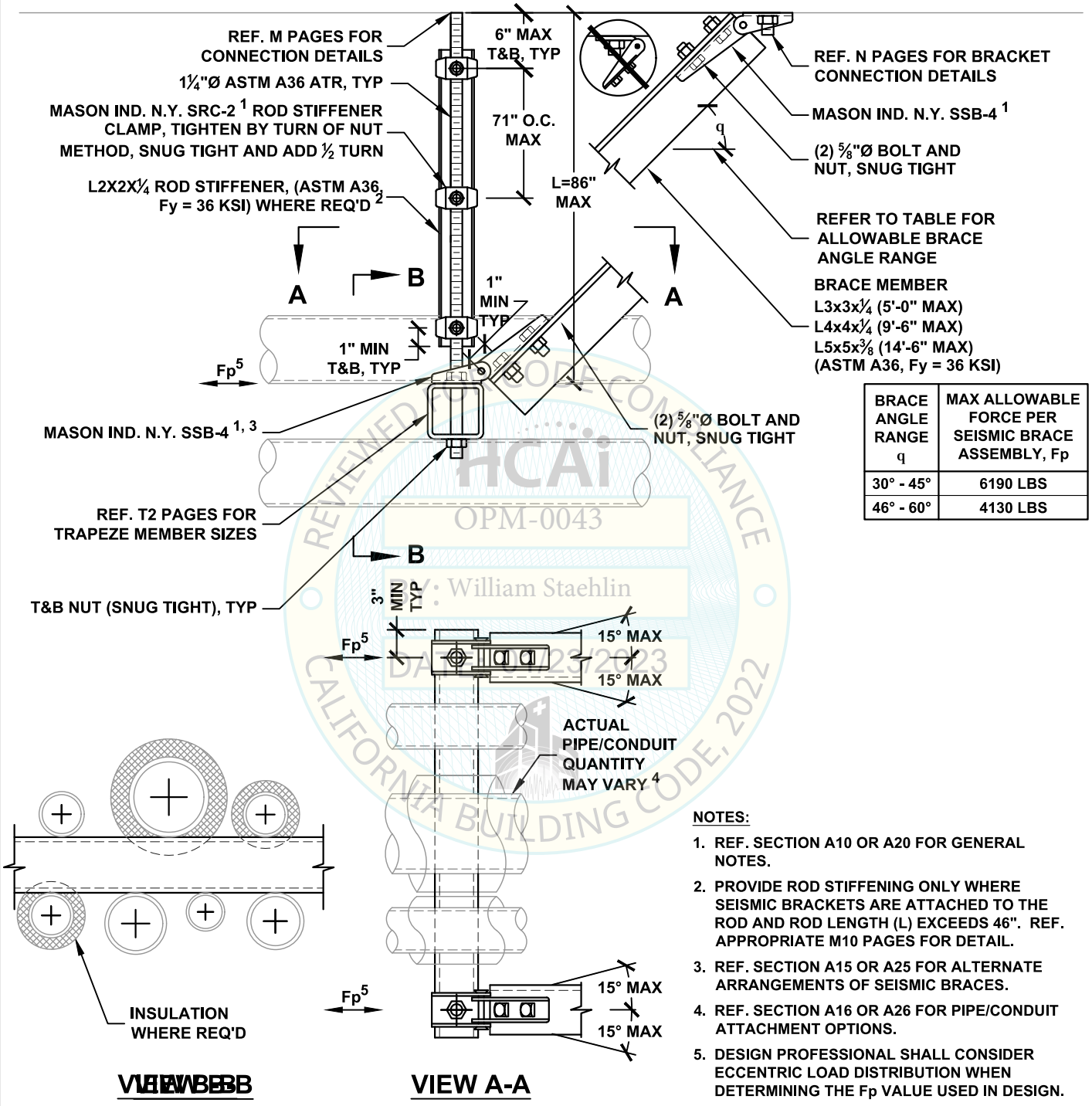

BRACE ANGLE RANGE q	MAX ALLOWABLE FORCE PER SEISMIC BRACE ASSEMBLY, Fp
30° - 45°	6190 LBS
46° - 60°	4130 LBS

VIEW B-B

VIEW A-A

NOTES:

1. REF. SECTION A10 OR A20 FOR GENERAL NOTES.
2. PROVIDE ROD STIFFENING ONLY WHERE SEISMIC BRACKETS ARE ATTACHED TO THE ROD AND ROD LENGTH (L) EXCEEDS 46". REF. APPROPRIATE M10 PAGES FOR DETAIL.
3. REF. SECTION A15 OR A25 FOR ALTERNATE ARRANGEMENTS OF SEISMIC BRACES.
4. REF. SECTION A16 OR A26 FOR PIPE/CONDUIT ATTACHMENT OPTIONS.
5. DESIGN PROFESSIONAL SHALL CONSIDER ECCENTRIC LOAD DISTRIBUTION WHEN DETERMINING THE Fp VALUE USED IN DESIGN.

HCAi REVIEWED FOR CODE COMPLIANCE CALIFORNIA BUILDING CODE, 2022 OPM-0043 BY: William Staehlin DATE: 1/23/2023

MASON WEST
1601 E. Miraloma Ave. Placentia, CA 92870
TEL (714) 630 - 0701, www.masonwest.com

Jiefu "Jeff" Zhang, SE
California SE No. S5270

PAGE **F1.74**

HANGER ROD DIAMETER = 1¼"	PIPING/CONDUIT ALL-DIRECTIONAL TRAPEZE SEISMIC SOLID BRACING SYSTEM 500 PLF MAX	KIT OPTIONS TS4A

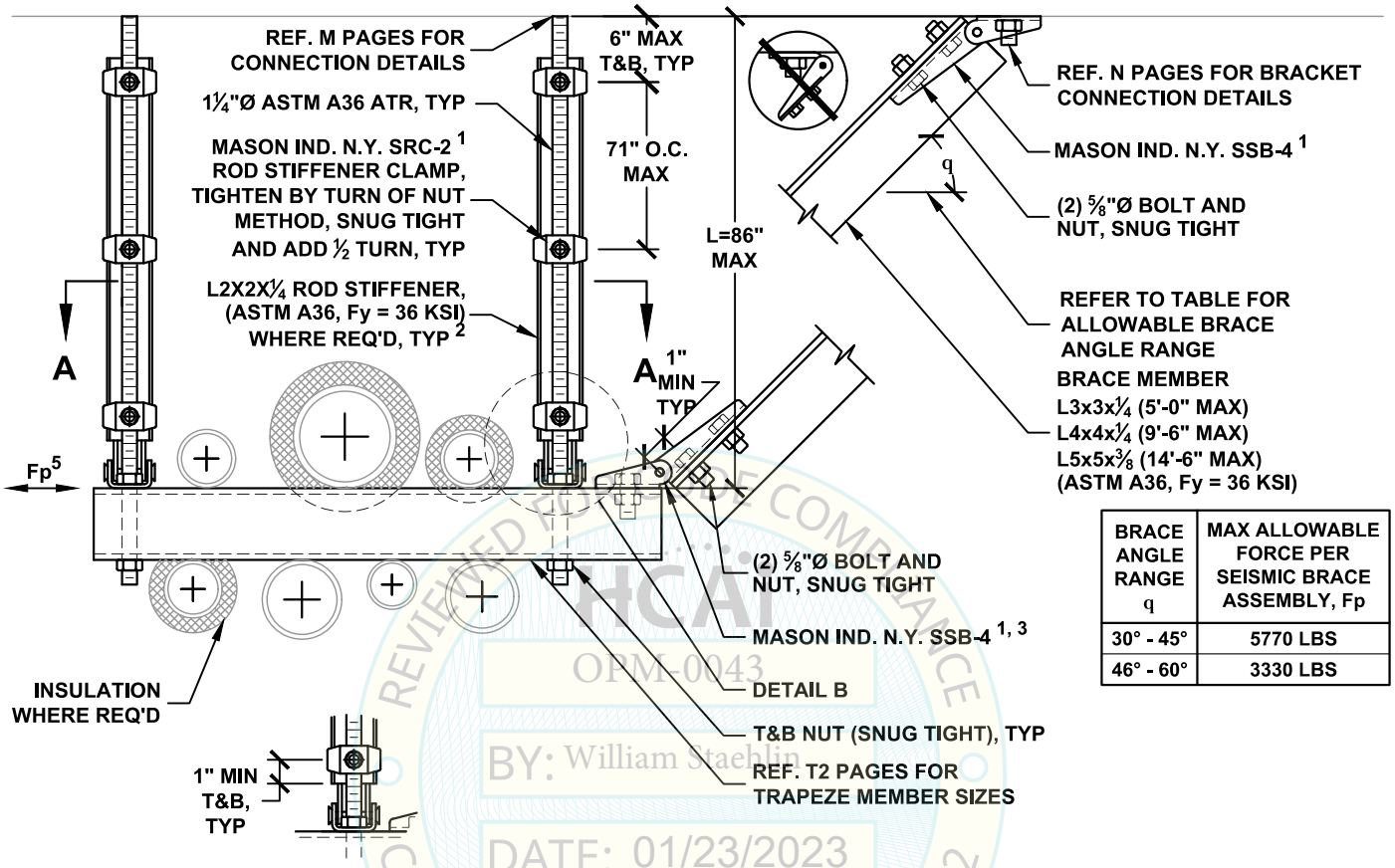

BRACE ANGLE RANGE q	MAX ALLOWABLE FORCE PER SEISMIC BRACE ASSEMBLY, Fp
30° - 45°	5770 LBS
46° - 60°	3330 LBS

DETAIL B

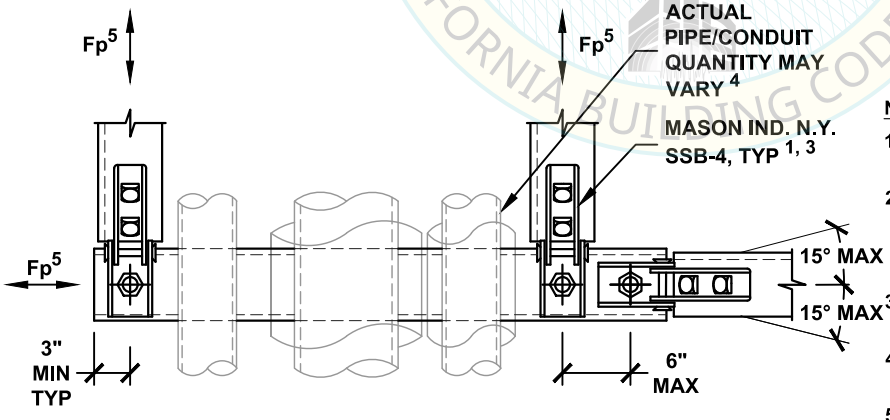

VIEW A-A

NOTES:

1. REF. SECTION A10 OR A20 FOR GENERAL NOTES.
2. PROVIDE ROD STIFFENING ONLY WHERE SEISMIC BRACKETS ARE ATTACHED TO THE ROD AND ROD LENGTH (L) EXCEEDS 46". REF. APPROPRIATE M10 PAGES FOR DETAIL.
3. REF. SECTION A15 OR A25 FOR ALTERNATE ARRANGEMENTS OF SEISMIC BRACES.
4. REF. SECTION A16 OR A26 FOR PIPE/CONDUIT ATTACHMENT OPTIONS.
5. DESIGN PROFESSIONAL SHALL CONSIDER ECCENTRIC LOAD DISTRIBUTION WHEN DETERMINING THE Fp VALUE USED IN DESIGN.

REVIEWED FOR CODE COMPLIANCE
CALIFORNIA BUILDING CODE, 2022
HCAI
OPM-0043
BY: William Staehlin
DATE: 01/23/2023

MASON WEST
1601 E. Miraloma Ave. Placentia, CA 92870
TEL (714) 630 - 0701, www.masonwest.com

Jiefu "Jeff" Zhang, SE
California SE No. S5270

PAGE
F1.75

HANGER ROD DIAMETER = ⅜"	PIPING/CONDUIT TRANSVERSE TRAPEZE SEISMIC CABLE BRACING SYSTEM 30 PLF MAX	KIT OPTIONS TC0T

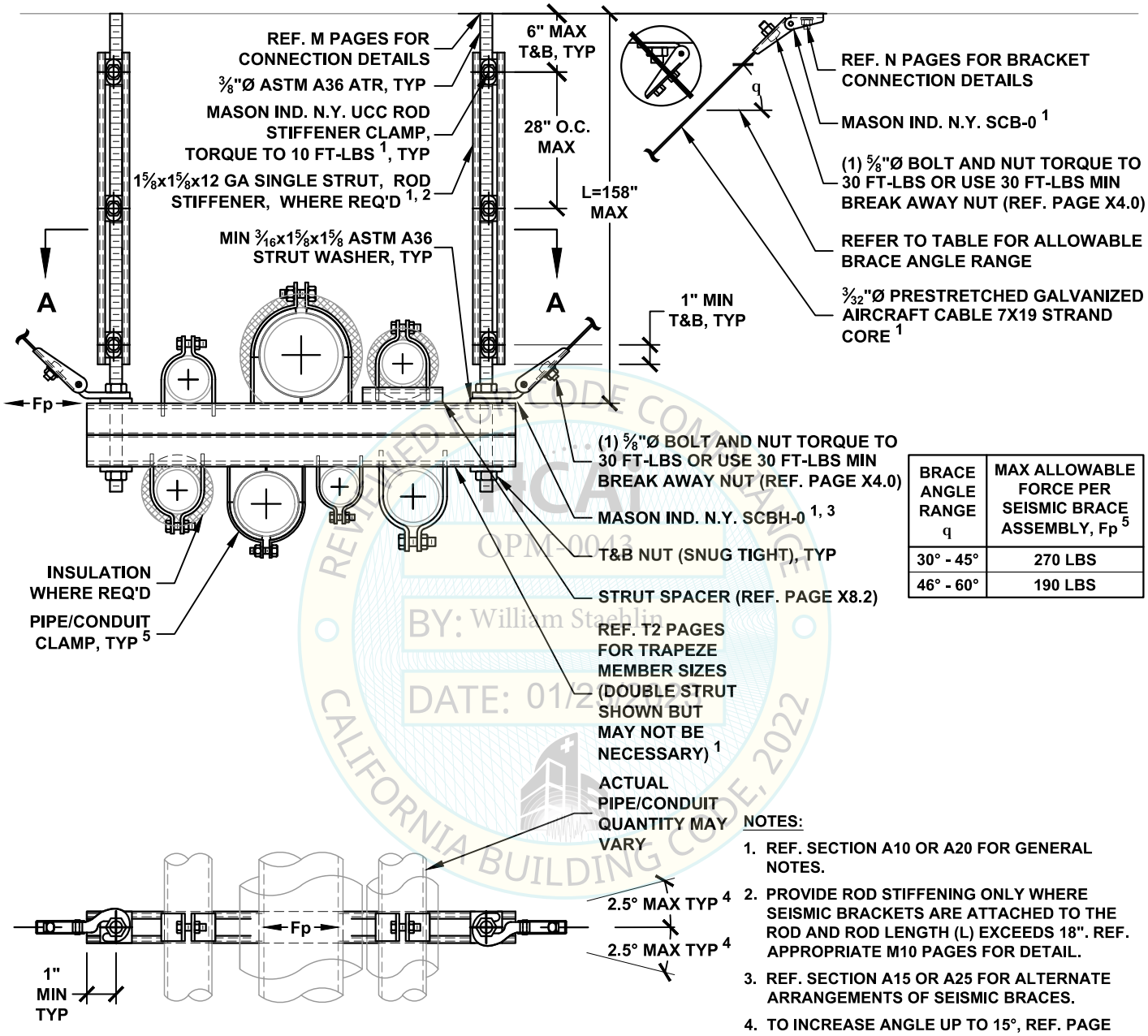

BRACE ANGLE RANGE q	MAX ALLOWABLE FORCE PER SEISMIC BRACE ASSEMBLY, Fp 5
30° - 45°	270 LBS
46° - 60°	190 LBS

REVIEWED FOR CODE COMPLIANCE
OPM-0043
BY: William Staehlin
DATE: 01/23/2023
CALIFORNIA BUILDING CODE, 2022

VIEW A-A

NOTES:

1. REF. SECTION A10 OR A20 FOR GENERAL NOTES.
2. PROVIDE ROD STIFFENING ONLY WHERE SEISMIC BRACKETS ARE ATTACHED TO THE ROD AND ROD LENGTH (L) EXCEEDS 18". REF. APPROPRIATE M10 PAGES FOR DETAIL.
3. REF. SECTION A15 OR A25 FOR ALTERNATE ARRANGEMENTS OF SEISMIC BRACES.
4. TO INCREASE ANGLE UP TO 15°, REF. PAGE A14.1 OR A24.2. WHERE MW-SCCI PIPE CLAMP IS USED, ANGLE INCREASE SHALL BE LIMITED TO 10° MAX.
5. REF. X8.0 - X8.1.1, X8.6 - X8.6.3 FOR PIPE/CONDUIT CLAMP OPTIONS. CLAMP RATINGS MAY REDUCE MAX ALLOWABLE Fp.

MASON WEST
1601 E. Miraloma Ave. Placentia, CA 92870
TEL (714) 630 - 0701, www.masonwest.com

Jiefu "Jeff" Zhang, SE
California SE No. S5270

PAGE
F2.10

HANGER ROD DIAMETER = 3/8"	PIPING/CONDUIT LONGITUDINAL TRAPEZE SEISMIC CABLE BRACING SYSTEM 30 PLF MAX	KIT OPTIONS TC0L

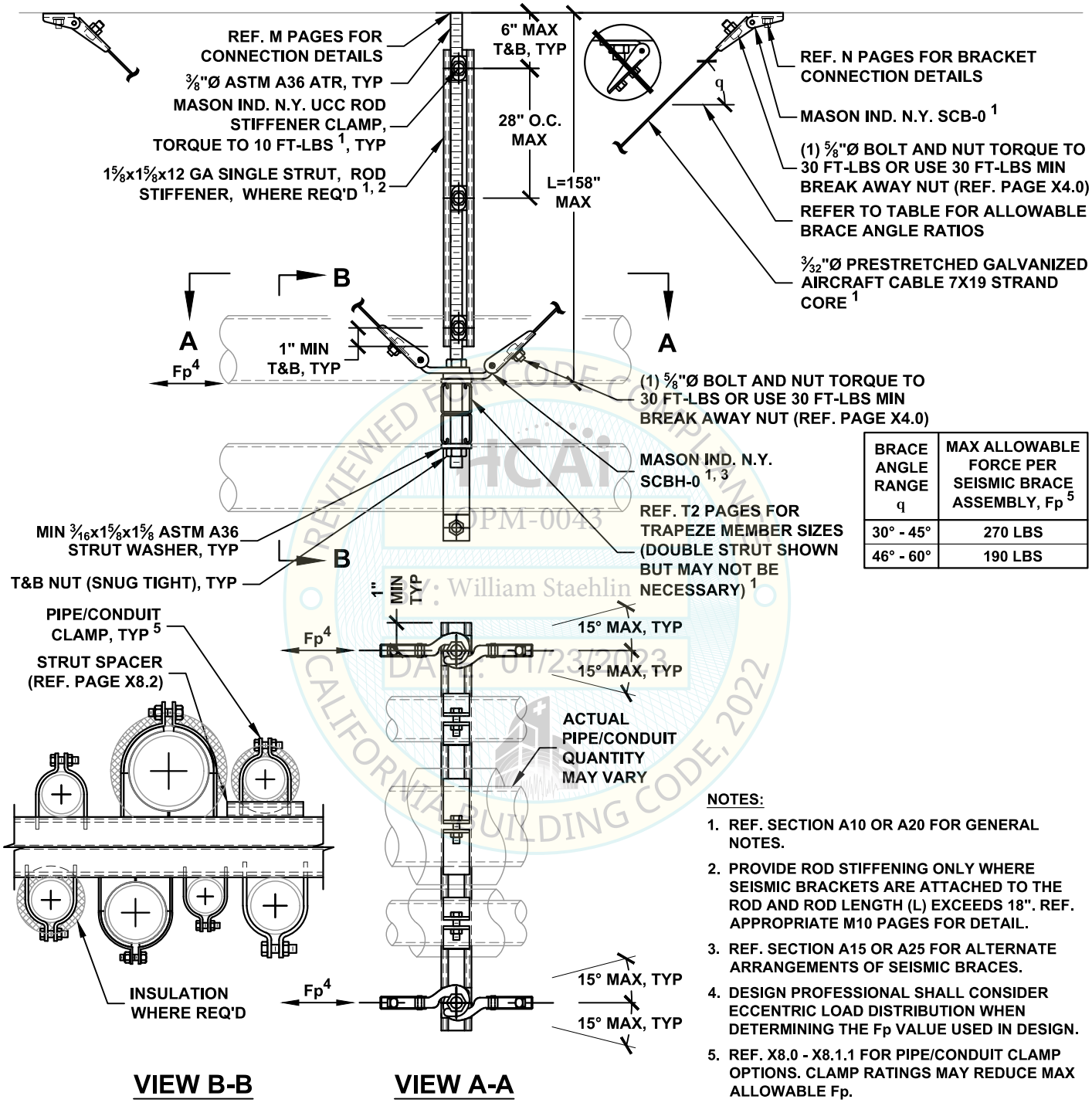

BRACE ANGLE RANGE q	MAX ALLOWABLE FORCE PER SEISMIC BRACE ASSEMBLY, Fp 5
30° - 45°	270 LBS
46° - 60°	190 LBS

VIEW B-B **VIEW A-A**

NOTES:

1. REF. SECTION A10 OR A20 FOR GENERAL NOTES.
2. PROVIDE ROD STIFFENING ONLY WHERE SEISMIC BRACKETS ARE ATTACHED TO THE ROD AND ROD LENGTH (L) EXCEEDS 18". REF. APPROPRIATE M10 PAGES FOR DETAIL.
3. REF. SECTION A15 OR A25 FOR ALTERNATE ARRANGEMENTS OF SEISMIC BRACES.
4. DESIGN PROFESSIONAL SHALL CONSIDER ECCENTRIC LOAD DISTRIBUTION WHEN DETERMINING THE Fp VALUE USED IN DESIGN.
5. REF. X8.0 - X8.1.1 FOR PIPE/CONDUIT CLAMP OPTIONS. CLAMP RATINGS MAY REDUCE MAX ALLOWABLE Fp.

REVIEWED FOR CODE COMPLIANCE
HCAi
OPM-0043
BY: William Staehlin
DATE: 01/23/2023
CALIFORNIA BUILDING CODE, 2022

MASON WEST
1601 E. Miraloma Ave. Placentia, CA 92870
TEL (714) 630 - 0701, www.masonwest.com

Jiefu "Jeff" Zhang, SE
California SE No. S5270

PAGE **F2.11**

HANGER ROD DIAMETER = 3/8"	PIPING/CONDUIT ALL-DIRECTIONAL TRAPEZE SEISMIC CABLE BRACING SYSTEM 30 PLF MAX	KIT OPTIONS TC0A

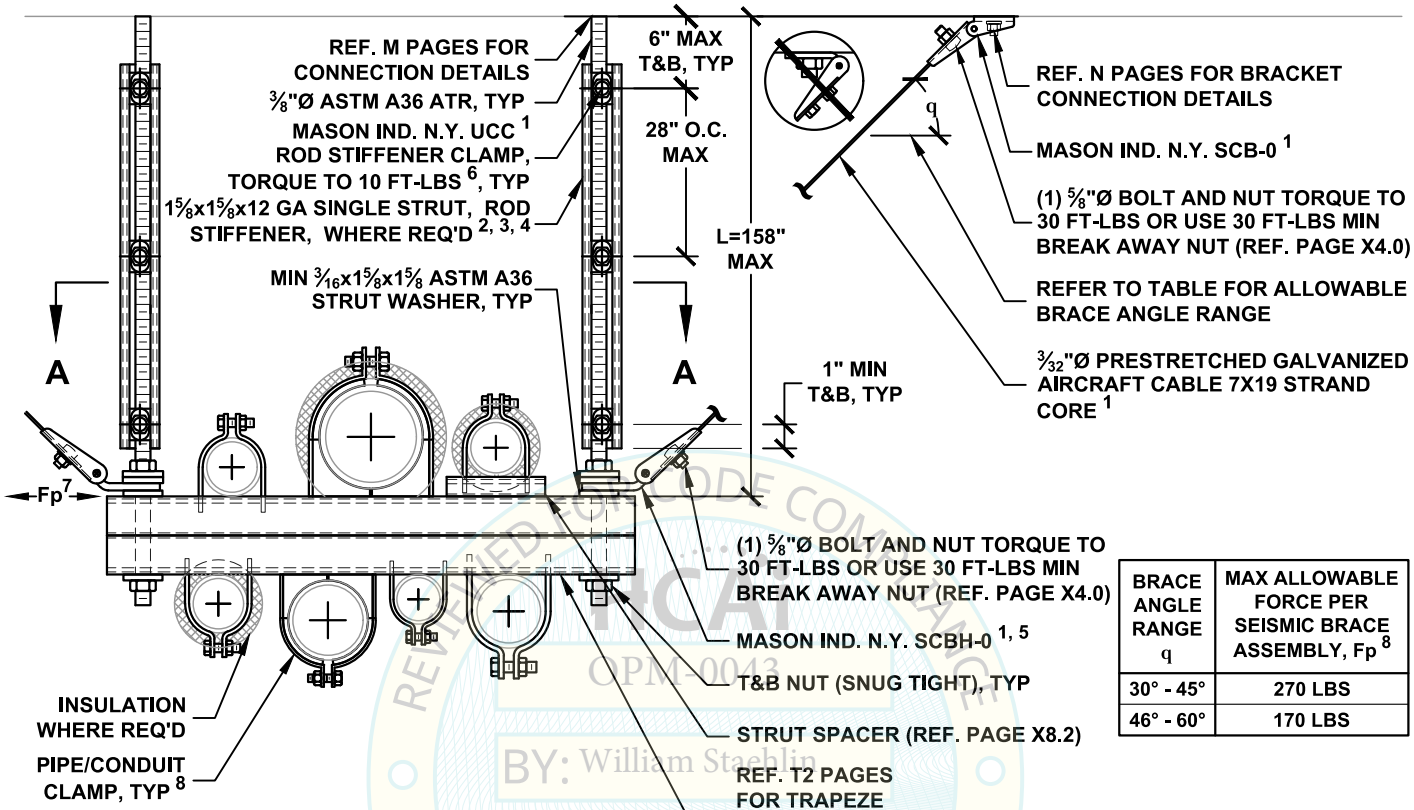

BRACE ANGLE RANGE q	MAX ALLOWABLE FORCE PER SEISMIC BRACE ASSEMBLY, Fp 8
30° - 45°	270 LBS
46° - 60°	170 LBS

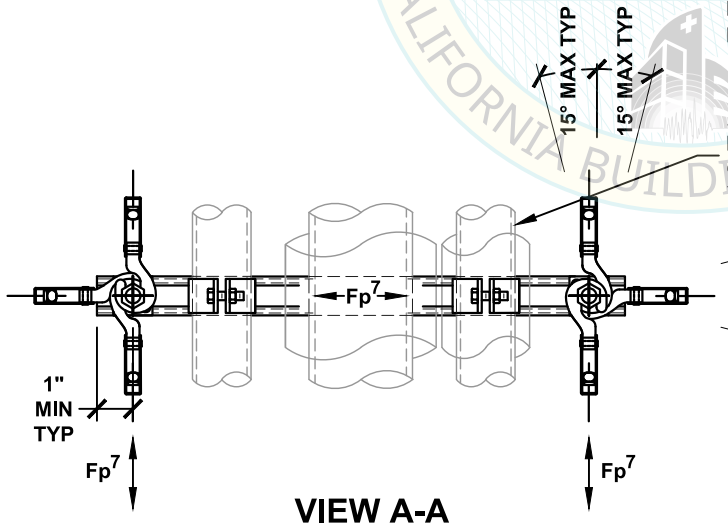

VIEW A-A

NOTES:

1. REF. SECTION A10 OR A20 FOR GENERAL NOTES.
2. PROVIDE ROD STIFFENING ONLY WHERE SEISMIC BRACKETS ARE ATTACHED TO THE ROD AND ROD LENGTH (L) EXCEEDS 18". REF. APPROPRIATE M10 PAGES FOR DETAIL.
3. ROD STIFFENER MAY BE PROVIDED WITH ROUND OR SLOTTED HOLES.
4. REF. X7.0 & X7.1 FOR STRUT MEMBER DATA.
5. REF. SECTION A15 OR A25 FOR ALTERNATE ARRANGEMENTS OF SEISMIC BRACES.
6. CONTRACTOR MAY SUBSTITUTE A BREAK-OFF BOLT SET TO MINIMUM 10 FT-LBS. REF. X3.0.
7. DESIGN PROFESSIONAL SHALL CONSIDER ECCENTRIC LOAD DISTRIBUTION WHEN DETERMINING THE Fp VALUE USED IN DESIGN.
8. REF. X8.0 - X8.1.1 FOR PIPE/CONDUIT CLAMP OPTIONS. CLAMP RATINGS MAY REDUCE MAX ALLOWABLE Fp.

REVIEWED FOR CODE COMPLIANCE
IAPMO UES
OPM-0043
BY: William Staehlin
DATE: 01/23/2023
CALIFORNIA BUILDING CODE 2022

MASON WEST
1601 E. Miraloma Ave. Placentia, CA 92870
TEL (714) 630 - 0701, www.masonwest.com

Jiefu "Jeff" Zhang, SE
California SE No. S5270

HANGER ROD DIAMETER = ½"	PIPING/CONDUIT TRANSVERSE TRAPEZE SEISMIC CABLE BRACING SYSTEM 60 PLF MAX	KIT OPTIONS TC1T

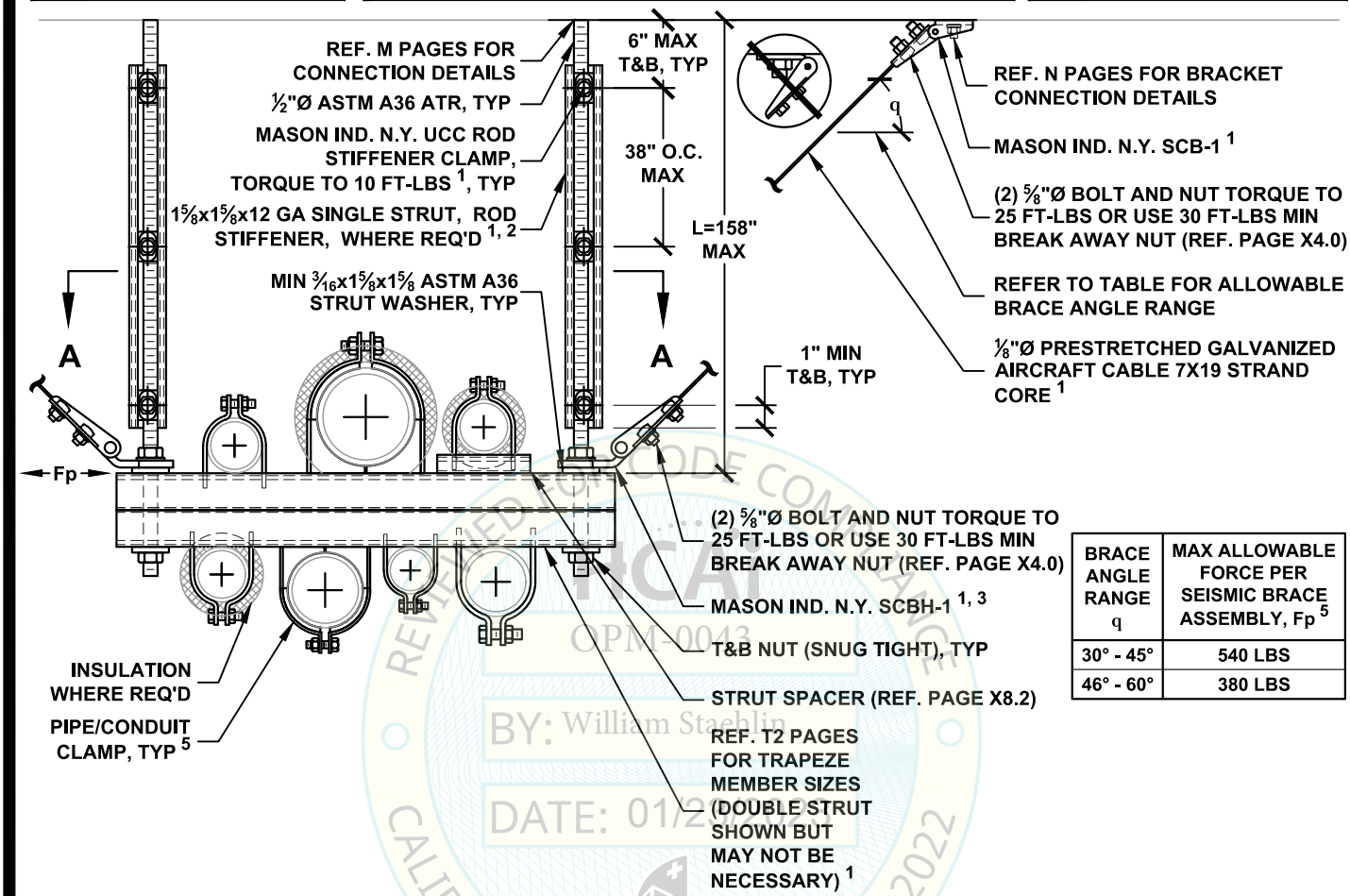

BRACE ANGLE RANGE q	MAX ALLOWABLE FORCE PER SEISMIC BRACE ASSEMBLY, Fp 5
30° - 45°	540 LBS
46° - 60°	380 LBS

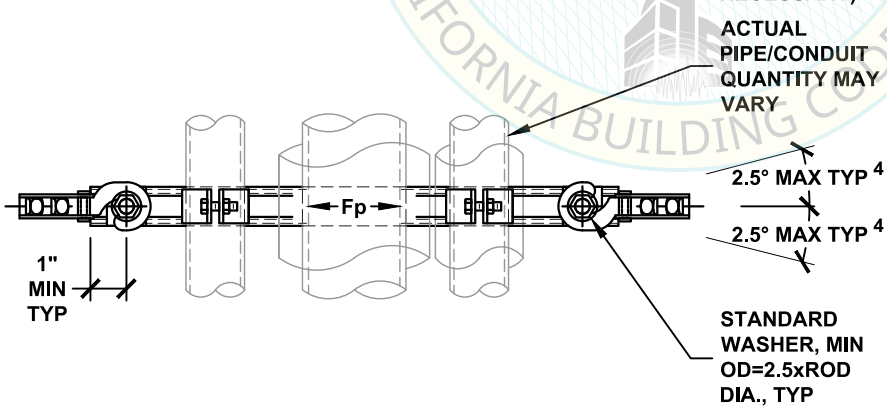

VIEW A-A

NOTES:

1. REF. SECTION A10 OR A20 FOR GENERAL NOTES.
2. PROVIDE ROD STIFFENING ONLY WHERE SEISMIC BRACKETS ARE ATTACHED TO THE ROD AND ROD LENGTH (L) EXCEEDS 25". REF. APPROPRIATE M10 PAGES FOR DETAIL.
3. REF. SECTION A15 OR A25 FOR ALTERNATE ARRANGEMENTS OF SEISMIC BRACES.
4. TO INCREASE ANGLE UP TO 15°, REF. PAGE A14.1 OR A24.2. WHERE MW-SCCI PIPE CLAMP IS USED, ANGLE INCREASE SHALL BE LIMITED TO 10° MAX.
5. REF. X8.0 - X8.1.1, X8.6 - X8.6.3 FOR PIPE/CONDUIT CLAMP OPTIONS. CLAMP RATINGS MAY REDUCE MAX ALLOWABLE Fp.

REVIEWED FOR CODE COMPLIANCE
OPM-0043
BY: William Staehlin
DATE: 01/23/2023
CALIFORNIA BUILDING CODE, 2022

MASON WEST
1601 E. Miraloma Ave. Placentia, CA 92870
TEL (714) 630 - 0701, www.masonwest.com

Jiefu "Jeff" Zhang, SE
California SE No. S5270

PAGE
F2.20

HANGER ROD DIAMETER = ½"	PIPING/CONDUIT LONGITUDINAL TRAPEZE SEISMIC CABLE BRACING SYSTEM 60 PLF MAX	KIT OPTIONS TC1L

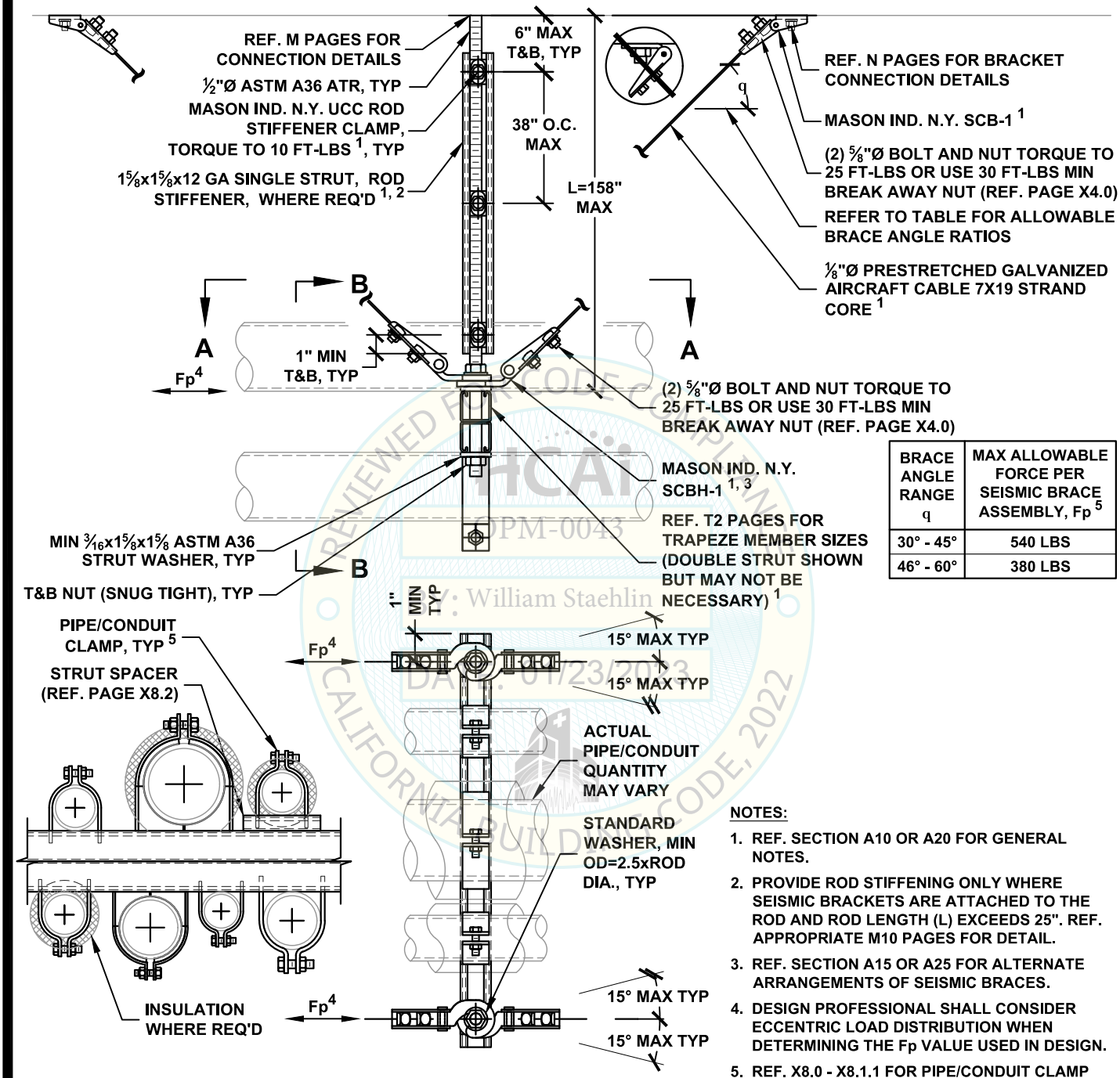

BRACE ANGLE RANGE q	MAX ALLOWABLE FORCE PER SEISMIC BRACE ASSEMBLY, Fp 5
30° - 45°	540 LBS
46° - 60°	380 LBS

VIEW B-B **VIEW A-A**

NOTES:

1. REF. SECTION A10 OR A20 FOR GENERAL NOTES.
2. PROVIDE ROD STIFFENING ONLY WHERE SEISMIC BRACKETS ARE ATTACHED TO THE ROD AND ROD LENGTH (L) EXCEEDS 25". REF. APPROPRIATE M10 PAGES FOR DETAIL.
3. REF. SECTION A15 OR A25 FOR ALTERNATE ARRANGEMENTS OF SEISMIC BRACES.
4. DESIGN PROFESSIONAL SHALL CONSIDER ECCENTRIC LOAD DISTRIBUTION WHEN DETERMINING THE Fp VALUE USED IN DESIGN.
5. REF. X8.0 - X8.1.1 FOR PIPE/CONDUIT CLAMP OPTIONS. CLAMP RATINGS MAY REDUCE MAX ALLOWABLE Fp.

REVIEWED FOR CODE COMPLIANCE
HCAi
OPM-0043
BY: William Staehlin
DATE: 01/23/2023
CALIFORNIA BUILDING CODE, 2022

MASON WEST
1601 E. Miraloma Ave. Placentia, CA 92870
TEL (714) 630 - 0701, www.masonwest.com

Jiefu "Jeff" Zhang, SE
California SE No. S5270

PAGE
F2.21

HANGER ROD DIAMETER = ½"	PIPING/CONDUIT ALL-DIRECTIONAL TRAPEZE SEISMIC CABLE BRACING SYSTEM 60 PLF MAX	KIT OPTIONS TC1A

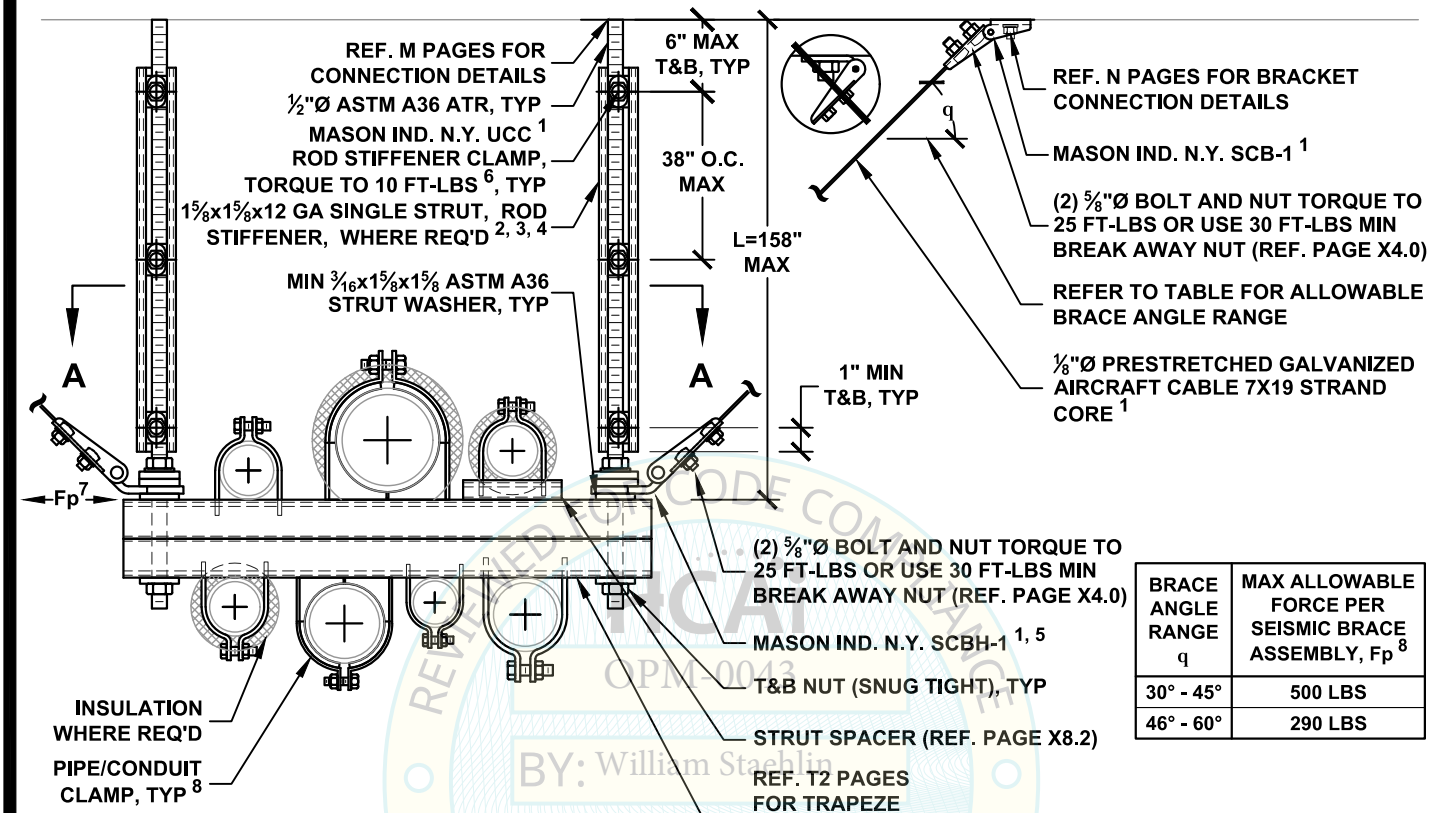

BRACE ANGLE RANGE q	MAX ALLOWABLE FORCE PER SEISMIC BRACE ASSEMBLY, Fp 8
30° - 45°	500 LBS
46° - 60°	290 LBS

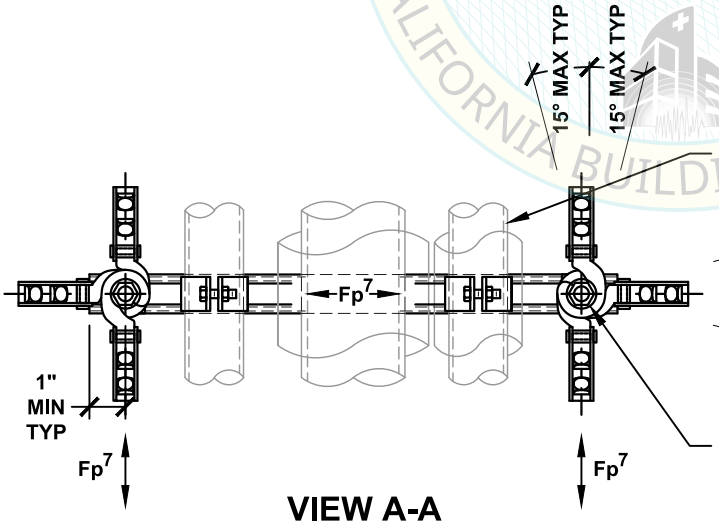

VIEW A-A

NOTES:

1. REF. SECTION A10 OR A20 FOR GENERAL NOTES.
2. PROVIDE ROD STIFFENING ONLY WHERE SEISMIC BRACKETS ARE ATTACHED TO THE ROD AND ROD LENGTH (L) EXCEEDS 25". REF. APPROPRIATE M10 PAGES FOR DETAIL.
3. ROD STIFFENER MAY BE PROVIDED WITH ROUND OR SLOTTED HOLES.
4. REF. X7.0 & X7.1 FOR STRUT MEMBER DATA.
5. REF. SECTION A15 OR A25 FOR ALTERNATE ARRANGEMENTS OF SEISMIC BRACES.
6. CONTRACTOR MAY SUBSTITUTE A BREAK-OFF BOLT SET TO MINIMUM 10 FT-LBS. REF. X3.0.
7. DESIGN PROFESSIONAL SHALL CONSIDER ECCENTRIC LOAD DISTRIBUTION WHEN DETERMINING THE Fp VALUE USED IN DESIGN.
8. REF. X8.0 - X8.1.1 FOR PIPE/CONDUIT CLAMP OPTIONS. CLAMP RATINGS MAY REDUCE MAX ALLOWABLE Fp.

REVIEWED FOR CODE COMPLIANCE
IAPMO UES ER
OPM-0043
BY: William Staehlin
DATE: 01/23/2023
CALIFORNIA BUILDING CODE 2022

MASON WEST
1601 E. Miraloma Ave. Placentia, CA 92870
TEL (714) 630 - 0701, www.masonwest.com

Jiefu "Jeff" Zhang, SE
California SE No. S5270

HANGER ROD DIAMETER = 5/8"	PIPING/CONDUIT TRANSVERSE TRAPEZE SEISMIC CABLE BRACING SYSTEM 100 PLF MAX	KIT OPTIONS TC1T

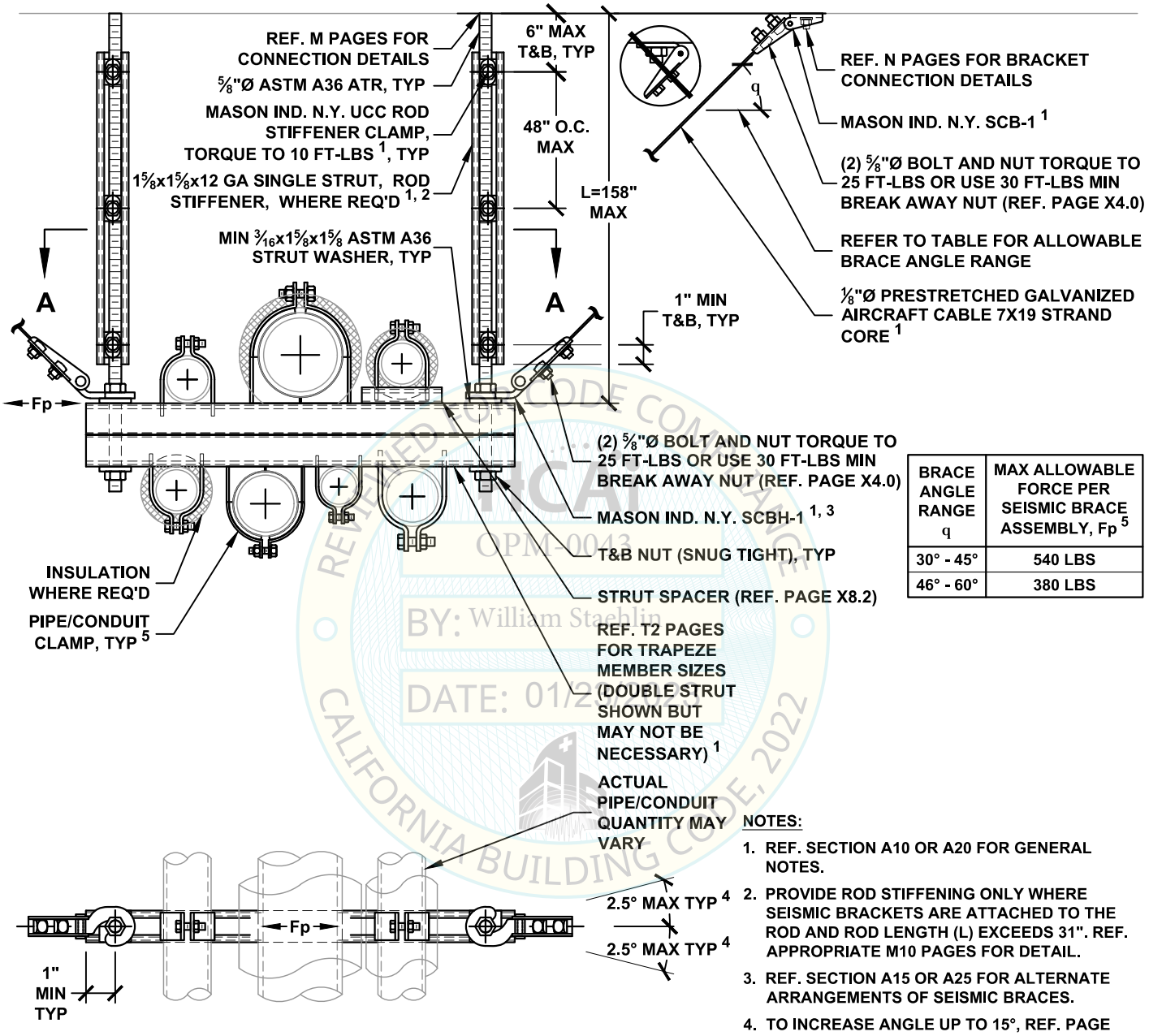

BRACE ANGLE RANGE q	MAX ALLOWABLE FORCE PER SEISMIC BRACE ASSEMBLY, Fp 5
30° - 45°	540 LBS
46° - 60°	380 LBS

VIEW A-A

NOTES:

1. REF. SECTION A10 OR A20 FOR GENERAL NOTES.
2. PROVIDE ROD STIFFENING ONLY WHERE SEISMIC BRACKETS ARE ATTACHED TO THE ROD AND ROD LENGTH (L) EXCEEDS 31". REF. APPROPRIATE M10 PAGES FOR DETAIL.
3. REF. SECTION A15 OR A25 FOR ALTERNATE ARRANGEMENTS OF SEISMIC BRACES.
4. TO INCREASE ANGLE UP TO 15°, REF. PAGE A14.1 OR A24.2. WHERE MW-SCCI PIPE CLAMP IS USED, ANGLE INCREASE SHALL BE LIMITED TO 10° MAX.
5. REF. X8.0 - X8.1.1, X8.6 - X8.6.3 FOR PIPE/CONDUIT CLAMP OPTIONS. CLAMP RATINGS MAY REDUCE MAX ALLOWABLE Fp.

REVIEWED FOR CODE COMPLIANCE
IAPMO ES
OPM-0043
BY: William Staehlin
DATE: 01/23/2023
CALIFORNIA BUILDING CODE, 2022

MASON WEST
1601 E. Miraloma Ave. Placentia, CA 92870
TEL (714) 630 - 0701, www.masonwest.com

Jiefu "Jeff" Zhang, SE
California SE No. S5270

PAGE
F2.30

HANGER ROD DIAMETER = 5/8"	PIPING/CONDUIT LONGITUDINAL TRAPEZE SEISMIC CABLE BRACING SYSTEM 100 PLF MAX	KIT OPTIONS TC1L

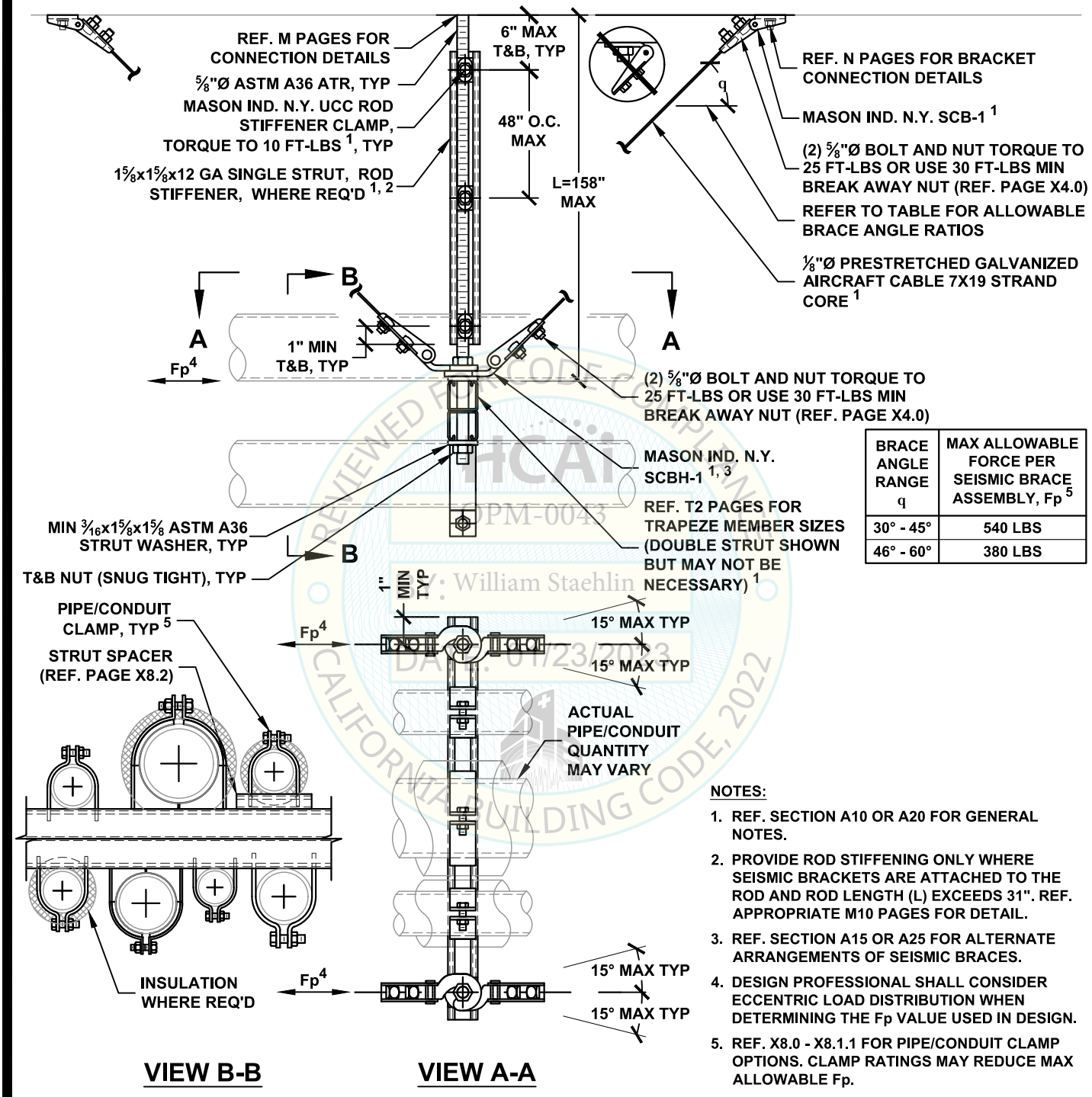

BRACE ANGLE RANGE q	MAX ALLOWABLE FORCE PER SEISMIC BRACE ASSEMBLY, Fp 5
30° - 45°	540 LBS
46° - 60°	380 LBS

VIEW B-B **VIEW A-A**

NOTES:

1. REF. SECTION A10 OR A20 FOR GENERAL NOTES.
2. PROVIDE ROD STIFFENING ONLY WHERE SEISMIC BRACKETS ARE ATTACHED TO THE ROD AND ROD LENGTH (L) EXCEEDS 31". REF. APPROPRIATE M10 PAGES FOR DETAIL.
3. REF. SECTION A15 OR A25 FOR ALTERNATE ARRANGEMENTS OF SEISMIC BRACES.
4. DESIGN PROFESSIONAL SHALL CONSIDER ECCENTRIC LOAD DISTRIBUTION WHEN DETERMINING THE Fp VALUE USED IN DESIGN.
5. REF. X8.0 - X8.1.1 FOR PIPE/CONDUIT CLAMP OPTIONS. CLAMP RATINGS MAY REDUCE MAX ALLOWABLE Fp.

REVIEWED FOR CODE COMPLIANCE
HCAi
OPM-0043
BY: William Staehlin
DATE: 01/23/2023
CALIFORNIA BUILDING CODE, 2022

MASON WEST
1601 E. Miraloma Ave. Placentia, CA 92870
TEL (714) 630 - 0701, www.masonwest.com

Jiefu "Jeff" Zhang, SE
California SE No. S5270

PAGE
F2.31

HANGER ROD DIAMETER = 5/8"	PIPING/CONDUIT ALL-DIRECTIONAL TRAPEZE SEISMIC CABLE BRACING SYSTEM 100 PLF MAX	KIT OPTIONS TC1A

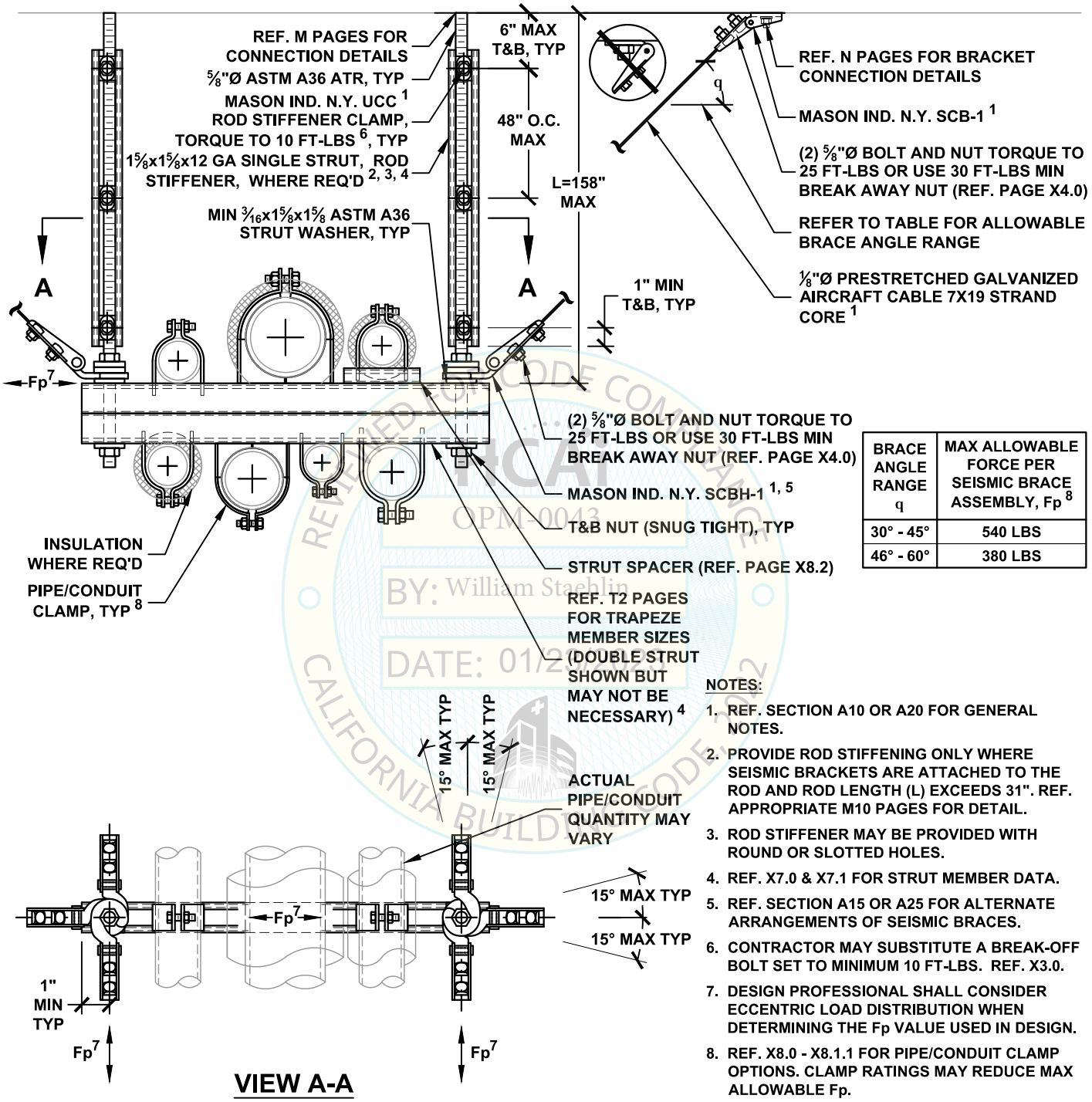

VIEW A-A

BRACE ANGLE RANGE q	MAX ALLOWABLE FORCE PER SEISMIC BRACE ASSEMBLY, Fp 8
30° - 45°	540 LBS
46° - 60°	380 LBS

NOTES:

1. REF. SECTION A10 OR A20 FOR GENERAL NOTES.
2. PROVIDE ROD STIFFENING ONLY WHERE SEISMIC BRACKETS ARE ATTACHED TO THE ROD AND ROD LENGTH (L) EXCEEDS 31". REF. APPROPRIATE M10 PAGES FOR DETAIL.
3. ROD STIFFENER MAY BE PROVIDED WITH ROUND OR SLOTTED HOLES.
4. REF. X7.0 & X7.1 FOR STRUT MEMBER DATA.
5. REF. SECTION A15 OR A25 FOR ALTERNATE ARRANGEMENTS OF SEISMIC BRACES.
6. CONTRACTOR MAY SUBSTITUTE A BREAK-OFF BOLT SET TO MINIMUM 10 FT-LBS. REF. X3.0.
7. DESIGN PROFESSIONAL SHALL CONSIDER ECCENTRIC LOAD DISTRIBUTION WHEN DETERMINING THE Fp VALUE USED IN DESIGN.
8. REF. X8.0 - X8.1.1 FOR PIPE/CONDUIT CLAMP OPTIONS. CLAMP RATINGS MAY REDUCE MAX ALLOWABLE Fp.

REVIEWED FOR CODE COMPLIANCE
OPM-0043
BY: William Staehlin
DATE: 01/23/2023
CALIFORNIA BUILDING CODE 2022

MASON WEST
1601 E. Miraloma Ave. Placentia, CA 92870
TEL (714) 630 - 0701, www.masonwest.com

Jiefu "Jeff" Zhang, SE
California SE No. S5270

PAGE
F2.32

HANGER ROD DIAMETER = ¾"	PIPING/CONDUIT TRANSVERSE TRAPEZE SEISMIC CABLE BRACING SYSTEM 150 PLF MAX	KIT OPTIONS TC2T

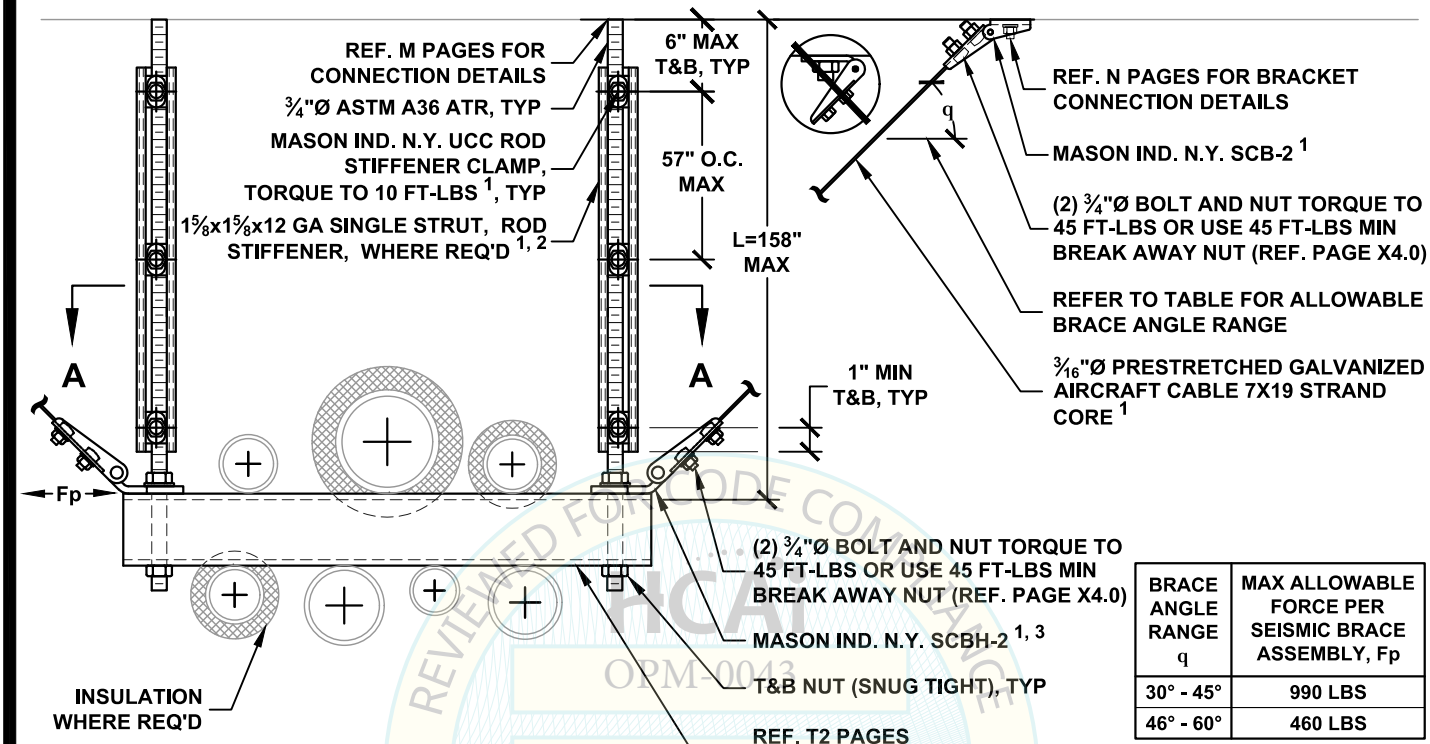

BRACE ANGLE RANGE q	MAX ALLOWABLE FORCE PER SEISMIC BRACE ASSEMBLY, Fp
30° - 45°	990 LBS
46° - 60°	460 LBS

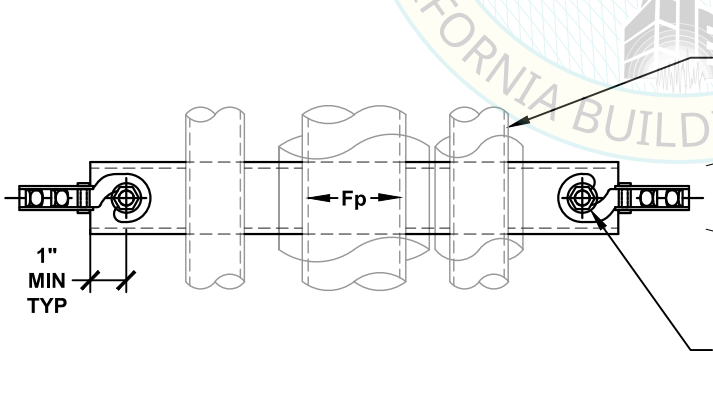

VIEW A-A

NOTES:

1. REF. SECTION A10 OR A20 FOR GENERAL NOTES.
2. PROVIDE ROD STIFFENING ONLY WHERE SEISMIC BRACKETS ARE ATTACHED TO THE ROD AND ROD LENGTH (L) EXCEEDS 37". REF. APPROPRIATE M10 PAGES FOR DETAIL.
3. REF. SECTION A15 OR A25 FOR ALTERNATE ARRANGEMENTS OF SEISMIC BRACES.
4. TO INCREASE ANGLE UP TO 15°, REF. PAGE A14.1 OR A24.2.
5. REF. SECTION A16 OR A26 FOR PIPE/CONDUIT ATTACHMENT OPTIONS.

REVIEWED FOR CODE COMPLIANCE
HCAI
OPM-0043
BY: William Staehlin
DATE: 01/23/2023
CALIFORNIA BUILDING CODE, 2022

MASON WEST
1601 E. Miraloma Ave. Placentia, CA 92870
TEL (714) 630 - 0701, www.masonwest.com

Jiefu "Jeff" Zhang, SE
California SE No. S5270

PAGE
F2.40

HANGER ROD DIAMETER = ¾"	PIPING/CONDUIT LONGITUDINAL TRAPEZE SEISMIC CABLE BRACING SYSTEM 150 PLF MAX	KIT OPTIONS TC2L

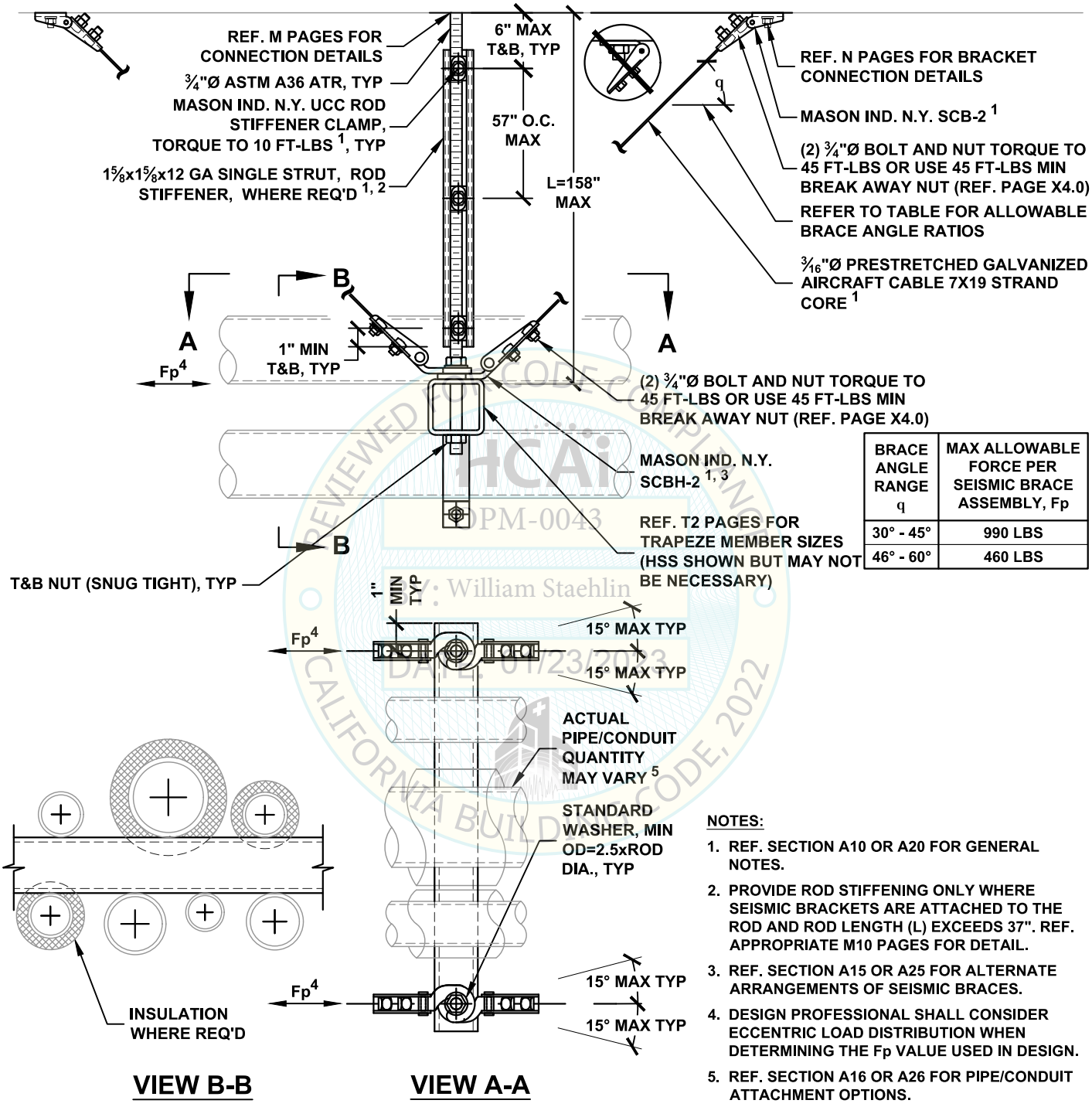

BRACE ANGLE RANGE q	MAX ALLOWABLE FORCE PER SEISMIC BRACE ASSEMBLY, Fp
30° - 45°	990 LBS
46° - 60°	460 LBS

NOTES:

1. REF. SECTION A10 OR A20 FOR GENERAL NOTES.
2. PROVIDE ROD STIFFENING ONLY WHERE SEISMIC BRACKETS ARE ATTACHED TO THE ROD AND ROD LENGTH (L) EXCEEDS 37". REF. APPROPRIATE M10 PAGES FOR DETAIL.
3. REF. SECTION A15 OR A25 FOR ALTERNATE ARRANGEMENTS OF SEISMIC BRACES.
4. DESIGN PROFESSIONAL SHALL CONSIDER ECCENTRIC LOAD DISTRIBUTION WHEN DETERMINING THE Fp VALUE USED IN DESIGN.
5. REF. SECTION A16 OR A26 FOR PIPE/CONDUIT ATTACHMENT OPTIONS.

HCAi OPM-0043 Reviewed by: William Staehlin DATE: 01/23/2023 CALIFORNIA BUILDING CODE, 2022

MASON WEST
1601 E. Miraloma Ave. Placentia, CA 92870
TEL (714) 630 - 0701, www.masonwest.com

Jiefu "Jeff" Zhang, SE
California SE No. S5270

PAGE
F2.41

HANGER ROD DIAMETER = ¾"	PIPING/CONDUIT ALL-DIRECTIONAL TRAPEZE SEISMIC CABLE BRACING SYSTEM 150 PLF MAX	KIT OPTIONS TC2A

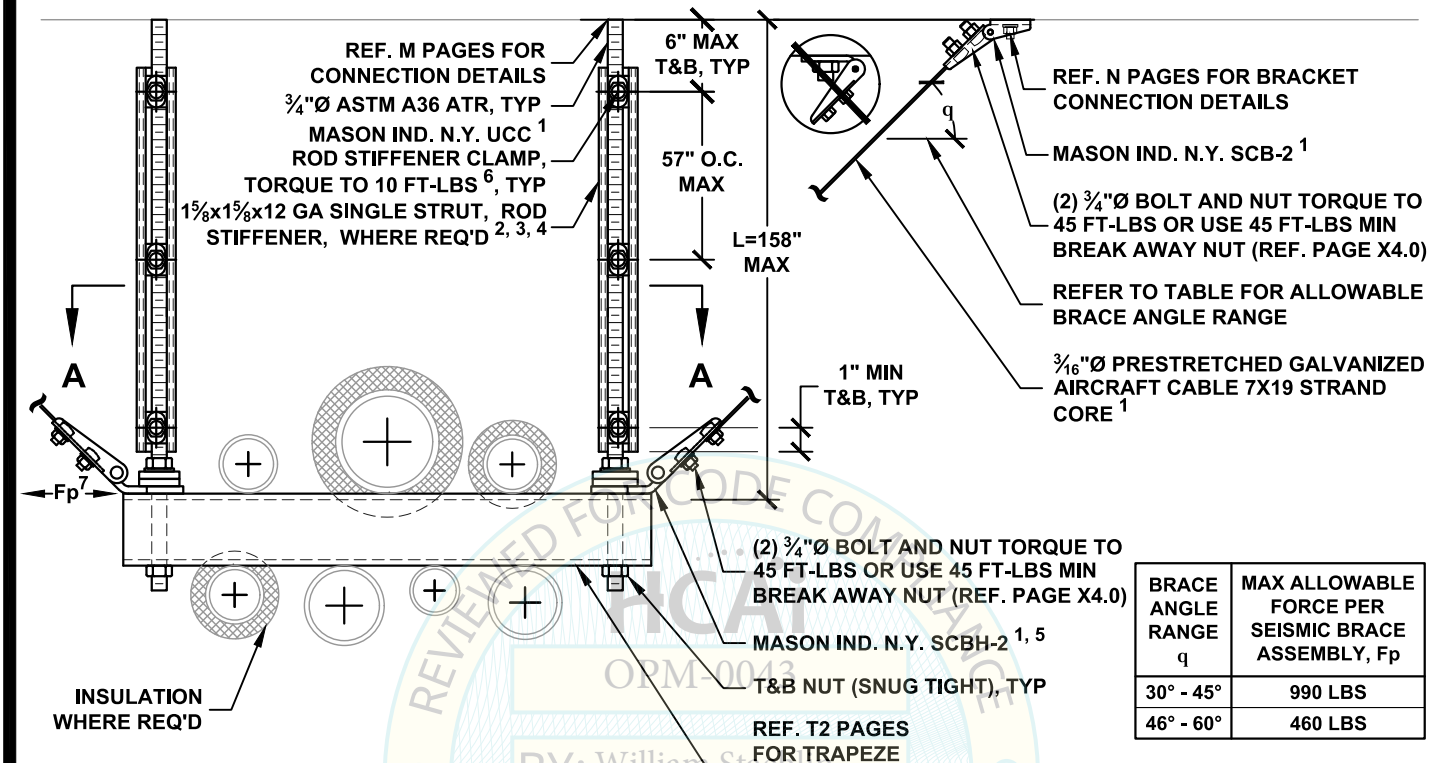

BRACE ANGLE RANGE q	MAX ALLOWABLE FORCE PER SEISMIC BRACE ASSEMBLY, Fp
30° - 45°	990 LBS
46° - 60°	460 LBS

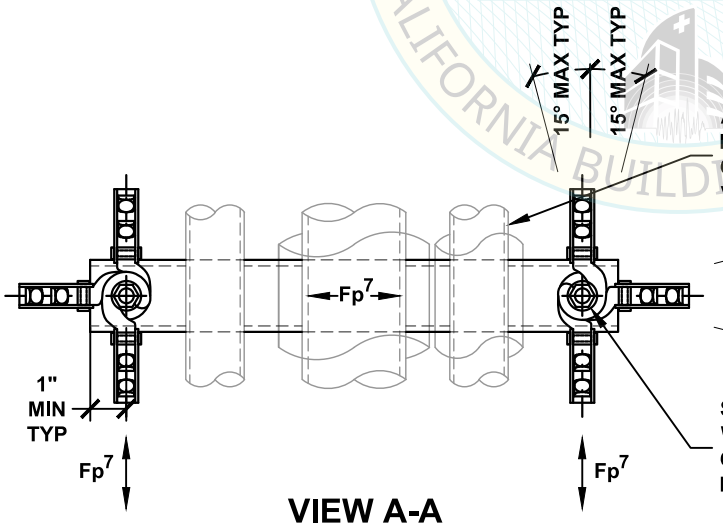

VIEW A-A

NOTES:

1. REF. SECTION A10 OR A20 FOR GENERAL NOTES.
2. PROVIDE ROD STIFFENING ONLY WHERE SEISMIC BRACKETS ARE ATTACHED TO THE ROD AND ROD LENGTH (L) EXCEEDS 37". REF. APPROPRIATE M10 PAGES FOR DETAIL.
3. ROD STIFFENER MAY BE PROVIDED WITH ROUND OR SLOTTED HOLES.
4. REF. X7.0 & X7.1 FOR STRUT MEMBER DATA.
5. REF. SECTION A15 OR A25 FOR ALTERNATE ARRANGEMENTS OF SEISMIC BRACES.
6. CONTRACTOR MAY SUBSTITUTE A BREAK-OFF BOLT SET TO MINIMUM 10 FT-LBS. REF. X3.0.
7. DESIGN PROFESSIONAL SHALL CONSIDER ECCENTRIC LOAD DISTRIBUTION WHEN DETERMINING THE Fp VALUE USED IN DESIGN.
8. REF. SECTION A16 OR A26 FOR PIPE/CONDUIT ATTACHMENT OPTIONS.

REVIEWED FOR CODE COMPLIANCE
HCAI
OPM-0043
BY: William Staehlin
DATE: 01/23/2023
CALIFORNIA BUILDING CODE 2022

MASON WEST
1601 E. Miraloma Ave. Placentia, CA 92870
TEL (714) 630 - 0701, www.masonwest.com

Jiefu "Jeff" Zhang, SE
California SE No. S5270

PAGE
F2.42

HANGER ROD DIAMETER = 3/8"	PIPING/CONDUIT X-PATTERN TRAPEZE SEISMIC CABLE BRACING SYSTEM 30 PLF MAX	KIT OPTIONS TC0X

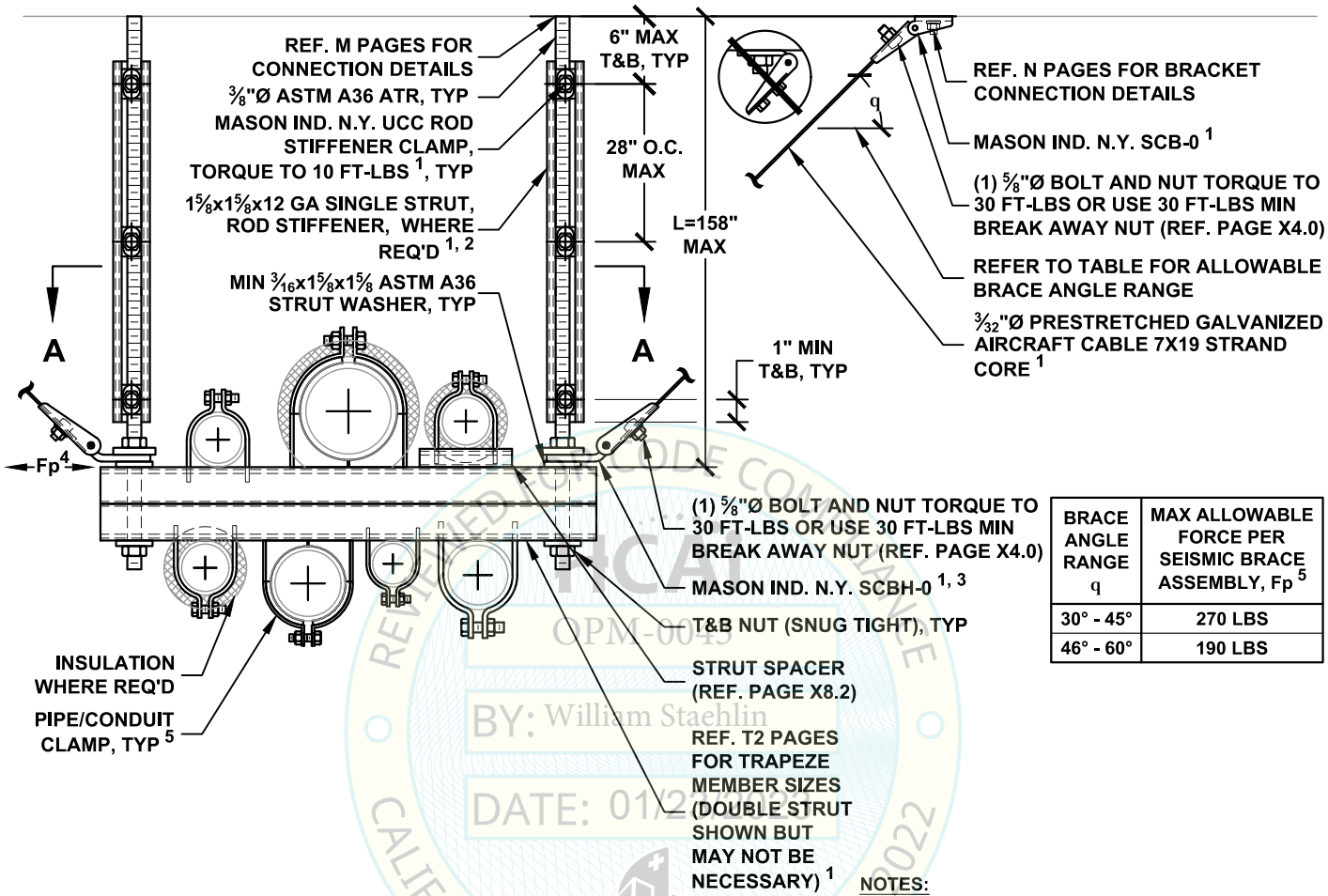

BRACE ANGLE RANGE q	MAX ALLOWABLE FORCE PER SEISMIC BRACE ASSEMBLY, Fp 5
30° - 45°	270 LBS
46° - 60°	190 LBS

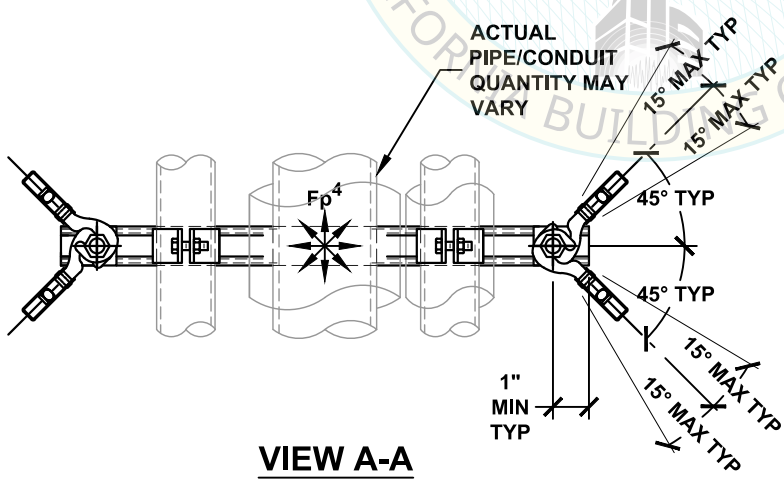

VIEW A-A

NOTES:

1. REF. SECTION A10 OR A20 FOR GENERAL NOTES.
2. PROVIDE ROD STIFFENING ONLY WHERE SEISMIC BRACKETS ARE ATTACHED TO THE ROD AND ROD LENGTH (L) EXCEEDS 18". REF. APPROPRIATE M10 PAGES FOR DETAIL.
3. REF. SECTION A15 OR A25 FOR ALTERNATE ARRANGEMENTS OF SEISMIC BRACES.
4. Fp SHALL BE A SINGLE LOAD APPLIED IN ANY HORIZONTAL DIRECTION. MULTIPLE ARROWS DO NOT SIGNIFY SIMULTANEOUS Fp LOADS ACTING AT ONE TIME. DESIGN PROFESSIONAL SHALL CONSIDER ECCENTRIC LOAD DISTRIBUTION WHEN DETERMINING THE Fp VALUE USED IN DESIGN.
5. REF. X8.0 - X8.1.1 FOR PIPE/CONDUIT CLAMP OPTIONS. CLAMP RATINGS MAY REDUCE MAX ALLOWABLE Fp.

REVIEWED FOR CODE COMPLIANCE
OPM-0043
BY: William Staehlin
DATE: 01/23/2023
CALIFORNIA BUILDING CODE 2022

MASON WEST
1601 E. Miraloma Ave. Placentia, CA 92870
TEL (714) 630 - 0701, www.masonwest.com

Jiefu "Jeff" Zhang, SE
California SE No. S5270

PAGE
F3.10

HANGER ROD DIAMETER = ½"	PIPING/CONDUIT X-PATTERN TRAPEZE SEISMIC CABLE BRACING SYSTEM 60 PLF MAX	KIT OPTIONS TC1X

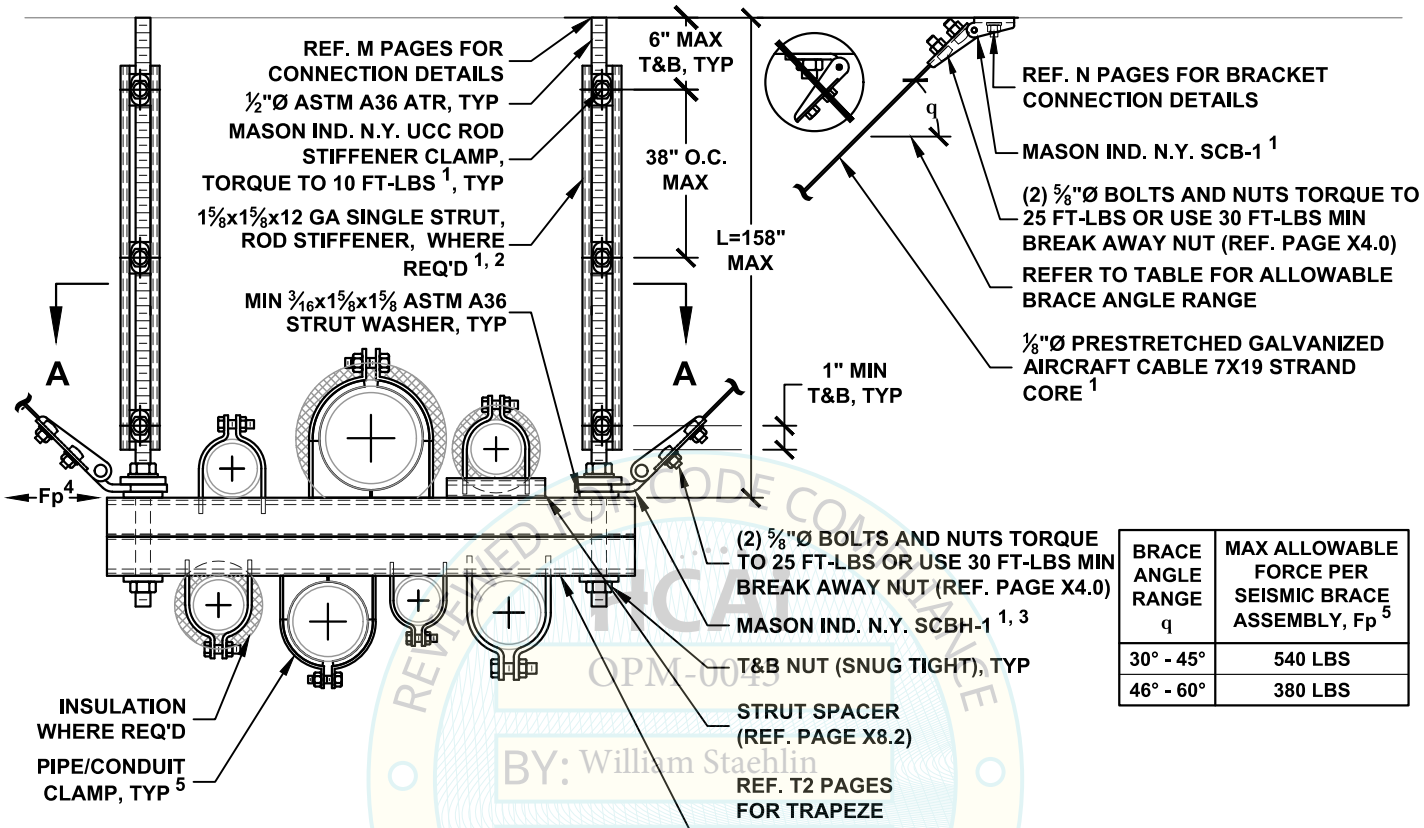

BRACE ANGLE RANGE q	MAX ALLOWABLE FORCE PER SEISMIC BRACE ASSEMBLY, Fp 5
30° - 45°	540 LBS
46° - 60°	380 LBS

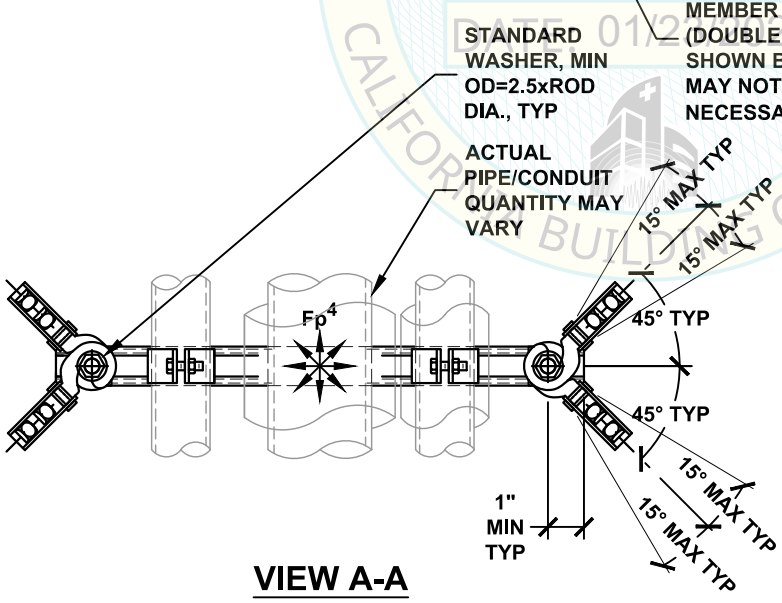

VIEW A-A

NOTES:

1. REF. SECTION A10 OR A20 FOR GENERAL NOTES.
2. PROVIDE ROD STIFFENING ONLY WHERE SEISMIC BRACKETS ARE ATTACHED TO THE ROD AND ROD LENGTH (L) EXCEEDS 25". REF. APPROPRIATE M10 PAGES FOR DETAIL.
3. REF. SECTION A15 OR A25 FOR ALTERNATE ARRANGEMENTS OF SEISMIC BRACES.
4. Fp SHALL BE A SINGLE LOAD APPLIED IN ANY HORIZONTAL DIRECTION. MULTIPLE ARROWS DO NOT SIGNIFY SIMULTANEOUS Fp LOADS ACTING AT ONE TIME. DESIGN PROFESSIONAL SHALL CONSIDER ECCENTRIC LOAD DISTRIBUTION WHEN DETERMINING THE Fp VALUE USED IN DESIGN.
5. REF. X8.0 - X8.1.1 FOR PIPE/CONDUIT CLAMP OPTIONS. CLAMP RATINGS MAY REDUCE MAX ALLOWABLE Fp.

REVIEWED FOR CODE COMPLIANCE
OPM-0043
BY: William Staehlin
DATE: 01/23/2023
CALIFORNIA BUILDING CODE 2022

MASON WEST
1601 E. Miraloma Ave. Placentia, CA 92870
TEL (714) 630 - 0701, www.masonwest.com

Jiefu "Jeff" Zhang, SE
California SE No. S5270

PAGE
F3.11

HANGER ROD DIAMETER = 5/8"	PIPING/CONDUIT X-PATTERN TRAPEZE SEISMIC CABLE BRACING SYSTEM 100 PLF MAX	KIT OPTIONS TC1X

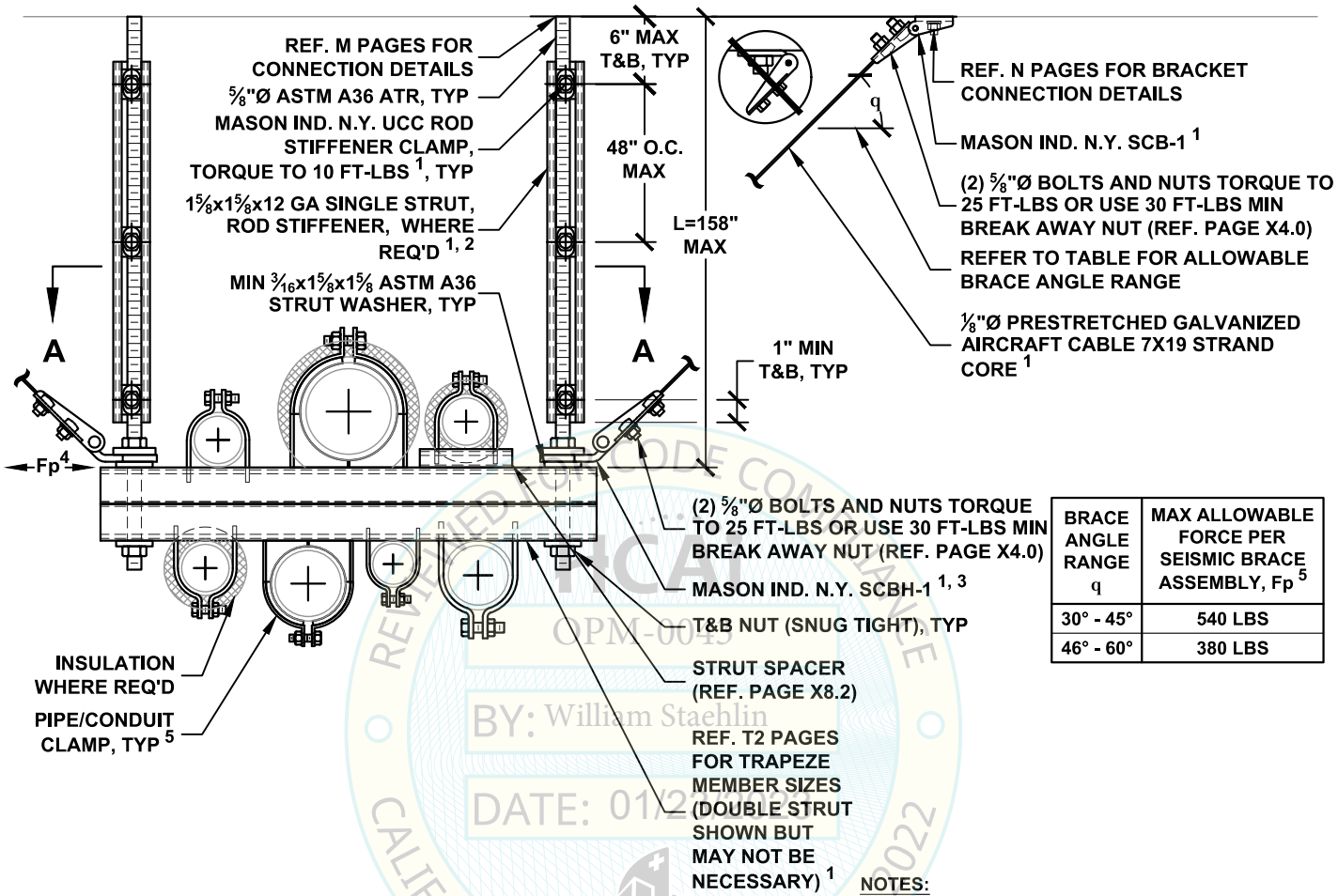

BRACE ANGLE RANGE q	MAX ALLOWABLE FORCE PER SEISMIC BRACE ASSEMBLY, Fp 5
30° - 45°	540 LBS
46° - 60°	380 LBS

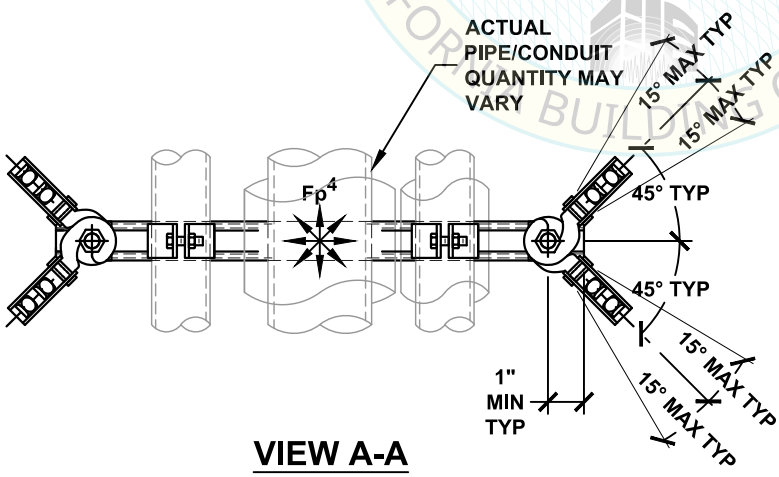

VIEW A-A

NOTES:

1. REF. SECTION A10 OR A20 FOR GENERAL NOTES.
2. PROVIDE ROD STIFFENING ONLY WHERE SEISMIC BRACKETS ARE ATTACHED TO THE ROD AND ROD LENGTH (L) EXCEEDS 31". REF. APPROPRIATE M10 PAGES FOR DETAIL.
3. REF. SECTION A15 OR A25 FOR ALTERNATE ARRANGEMENTS OF SEISMIC BRACES.
4. Fp SHALL BE A SINGLE LOAD APPLIED IN ANY HORIZONTAL DIRECTION. MULTIPLE ARROWS DO NOT SIGNIFY SIMULTANEOUS Fp LOADS ACTING AT ONE TIME. DESIGN PROFESSIONAL SHALL CONSIDER ECCENTRIC LOAD DISTRIBUTION WHEN DETERMINING THE Fp VALUE USED IN DESIGN.
5. REF. X8.0 - X8.1.1 FOR PIPE/CONDUIT CLAMP OPTIONS. CLAMP RATINGS MAY REDUCE MAX ALLOWABLE Fp.

REVIEWED FOR CODE COMPLIANCE
HCAI
OPM-0043
BY: William Staehlin
DATE: 01/23/2023
CALIFORNIA BUILDING CODE 2022

MASON WEST
1601 E. Miraloma Ave. Placentia, CA 92870
TEL (714) 630 - 0701, www.masonwest.com

Jiefu "Jeff" Zhang, SE
California SE No. S5270

PAGE
F3.12

HANGER ROD DIAMETER = ¾"	PIPING/CONDUIT X-PATTERN TRAPEZE SEISMIC CABLE BRACING SYSTEM 150 PLF MAX	KIT OPTIONS TC2X

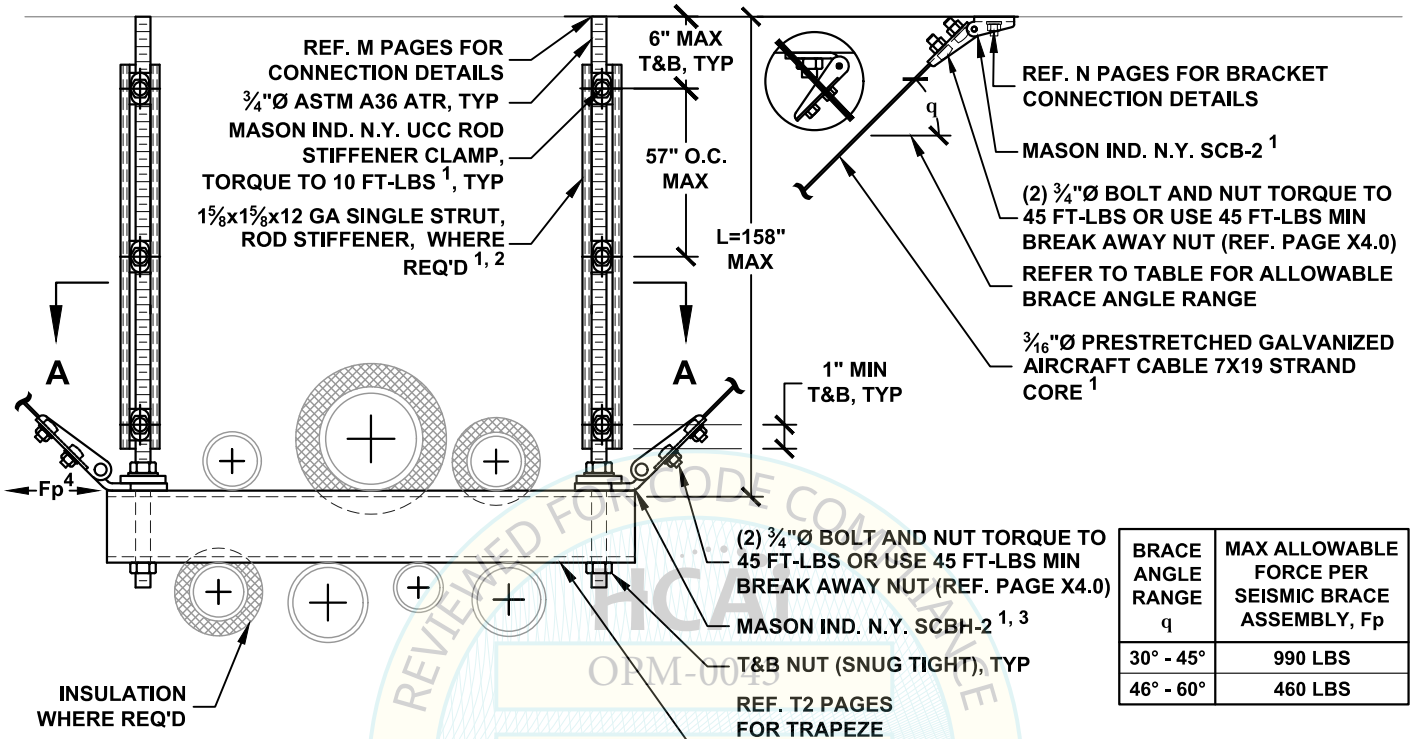

BRACE ANGLE RANGE q	MAX ALLOWABLE FORCE PER SEISMIC BRACE ASSEMBLY, Fp
30° - 45°	990 LBS
46° - 60°	460 LBS

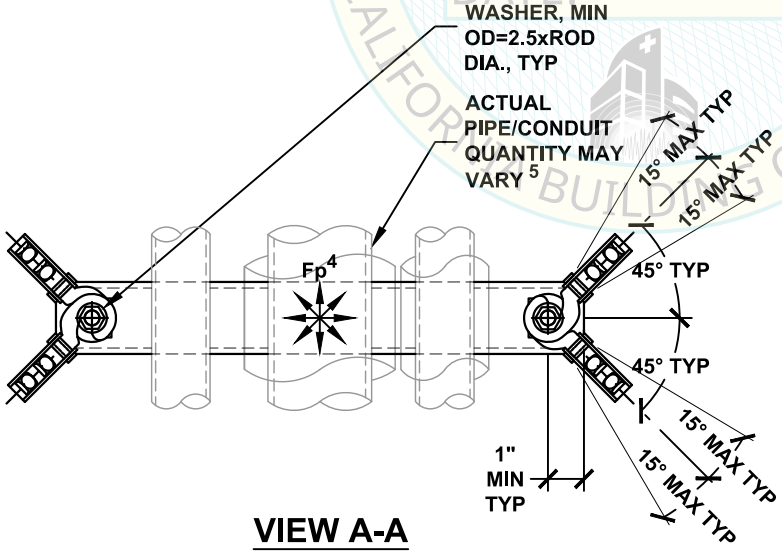

VIEW A-A

NOTES:

1. REF. SECTION A10 OR A20 FOR GENERAL NOTES.
2. PROVIDE ROD STIFFENING ONLY WHERE SEISMIC BRACKETS ARE ATTACHED TO THE ROD AND ROD LENGTH (L) EXCEEDS 37". REF. APPROPRIATE M10 PAGES FOR DETAIL.
3. REF. SECTION A15 OR A25 FOR ALTERNATE ARRANGEMENTS OF SEISMIC BRACES.
4. Fp SHALL BE A SINGLE LOAD APPLIED IN ANY HORIZONTAL DIRECTION. MULTIPLE ARROWS DO NOT SIGNIFY SIMULTANEOUS Fp LOADS ACTING AT ONE TIME. DESIGN PROFESSIONAL SHALL CONSIDER ECCENTRIC LOAD DISTRIBUTION WHEN DETERMINING THE Fp VALUE USED IN DESIGN.
5. REF. SECTION A16 OR A26 FOR PIPE/CONDUIT ATTACHMENT OPTIONS

REVIEWED FOR CODE COMPLIANCE
HCAI
OPM-0043
BY: William Staehlin
DATE: 01/23/2023
CALIFORNIA BUILDING CODE 2022

MASON WEST
1601 E. Miraloma Ave. Placentia, CA 92870
TEL (714) 630 - 0701, www.masonwest.com

Jiefu "Jeff" Zhang, SE
California SE No. S5270

HANGER ROD DIAMETER = ⅜"

PIPING/CONDUIT TRANSVERSE TRAPEZE SEISMIC SOLID BRACING SYSTEM 30 PLF MAX

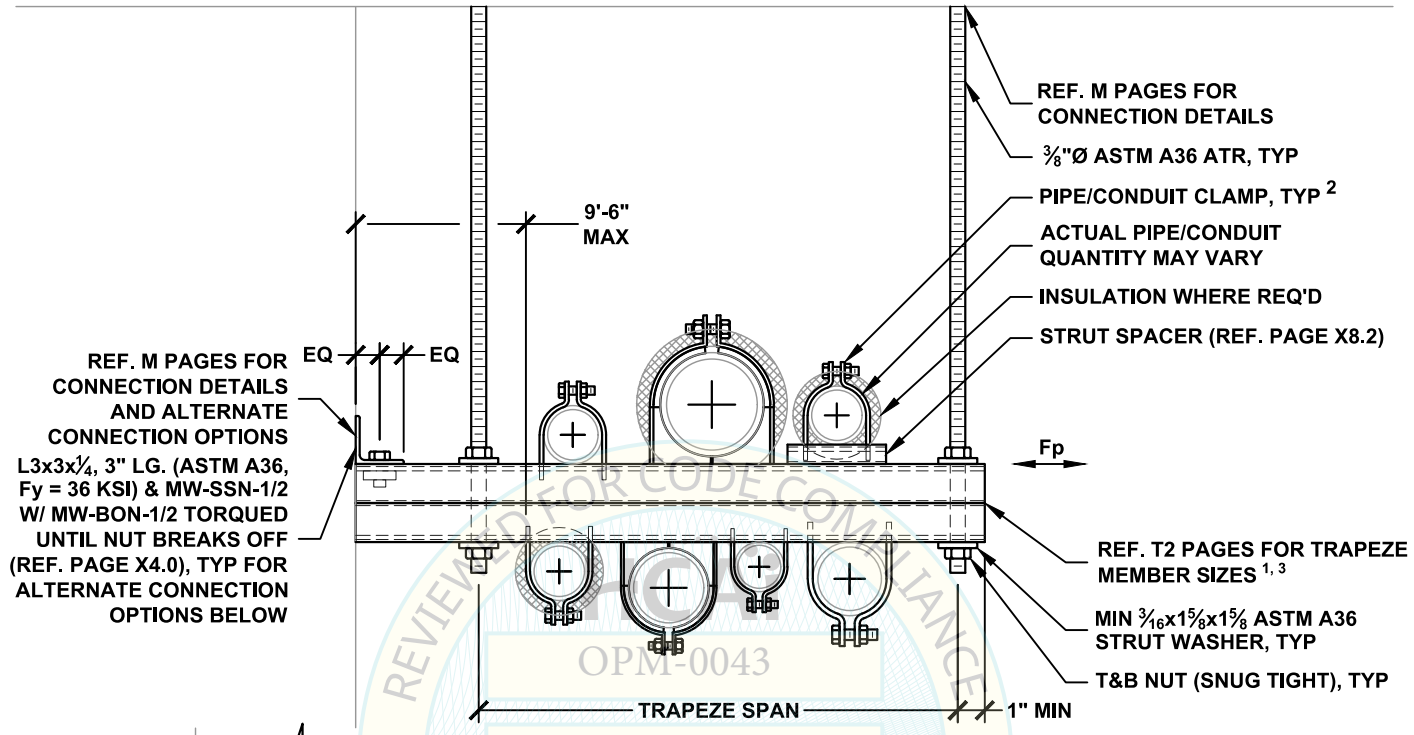

REVIEWED FOR CODE COMPLIANCE
OPM-0043
BY: William Staehlin
DATE: 01/23/2023
CALIFORNIA BUILDING CODE, 2022

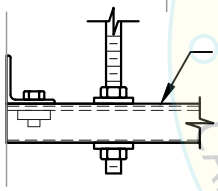

OPTION 1: SINGLE STRUT TRAPEZE

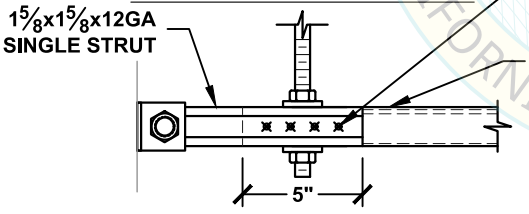

OPTION 2: SINGLE STRUT TRAPEZE

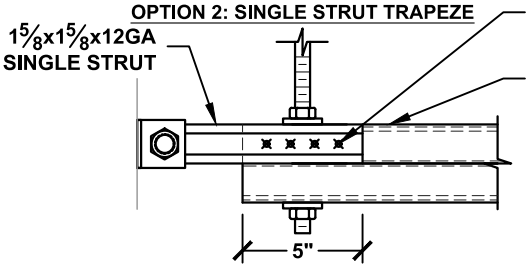

OPTION 3: DOUBLE STRUT TRAPEZE

MAX ALLOWABLE FORCE PER SEISMIC BRACE ASSEMBLY, Fp 2
670 LBS

NOTES:

1. TRAPEZE MEMBER MAY BE PROVIDED WITH ROUND HOLES SIZED FOR HANGER RODS. REF. X7.0 & X7.1 FOR STRUT MEMBER DATA.
2. REF. X8.0 - X8.1.1, X8.6 - X8.6.3 FOR PIPE/CONDUIT CLAMP OPTIONS. CLAMP RATINGS MAY REDUCE MAX ALLOWABLE Fp.
3. DOUBLE STRUT TRAPEZE OPTION SHOWN MAY NOT BE NECESSARY.
4. SEPARATE LONGITUDINAL BRACING SHALL BE PROVIDED FOR THE PIPE/CONDUIT RUN AS DISCUSSED IN SECTION A10.

MASON WEST
1601 E. Miraloma Ave. Placentia, CA 92870
TEL (714) 630 - 0701, www.masonwest.com

Jiefu "Jeff" Zhang, SE
California SE No. S5270

PAGE
F4.10

HANGER ROD DIAMETER = ⅜"

PIPING/CONDUIT ALL-DIRECTIONAL TRAPEZE SEISMIC SOLID BRACING SYSTEM 30 PLF MAX

KIT OPTIONS
TS12L
TS1220L
TSH312L
TSH320L

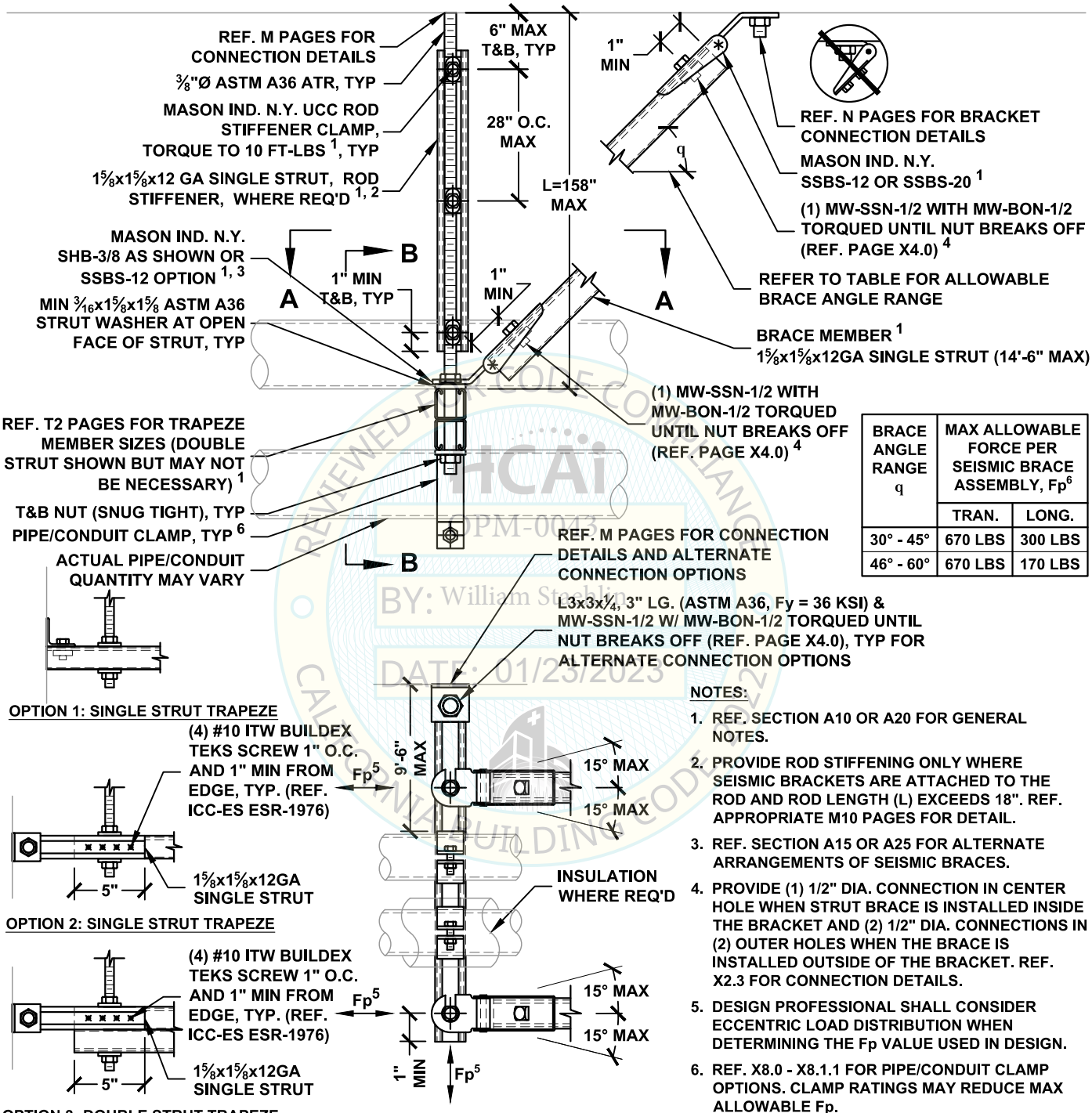

BRACE ANGLE RANGE q	MAX ALLOWABLE FORCE PER SEISMIC BRACE ASSEMBLY, Fp6	
	TRAN.	LONG.
30° - 45°	670 LBS	300 LBS
46° - 60°	670 LBS	170 LBS

NOTES:

1. REF. SECTION A10 OR A20 FOR GENERAL NOTES.
2. PROVIDE ROD STIFFENING ONLY WHERE SEISMIC BRACKETS ARE ATTACHED TO THE ROD AND ROD LENGTH (L) EXCEEDS 18". REF. APPROPRIATE M10 PAGES FOR DETAIL.
3. REF. SECTION A15 OR A25 FOR ALTERNATE ARRANGEMENTS OF SEISMIC BRACES.
4. PROVIDE (1) 1/2" DIA. CONNECTION IN CENTER HOLE WHEN STRUT BRACE IS INSTALLED INSIDE THE BRACKET AND (2) 1/2" DIA. CONNECTIONS IN (2) OUTER HOLES WHEN THE BRACE IS INSTALLED OUTSIDE OF THE BRACKET. REF. X2.3 FOR CONNECTION DETAILS.
5. DESIGN PROFESSIONAL SHALL CONSIDER ECCENTRIC LOAD DISTRIBUTION WHEN DETERMINING THE Fp VALUE USED IN DESIGN.
6. REF. X8.0 - X8.1.1 FOR PIPE/CONDUIT CLAMP OPTIONS. CLAMP RATINGS MAY REDUCE MAX ALLOWABLE Fp.

REVIEWED FOR CODE COMPLIANCE
HCAi
OPM-0043
BY: William Staehlin
DATE: 01/23/2023
CALIFORNIA BUILDING CODE

MASON WEST
1601 E. Miraloma Ave. Placentia, CA 92870
TEL (714) 630 - 0701, www.masonwest.com

Jiefu "Jeff" Zhang, SE
California SE No. S5270

PAGE
F4.12

HANGER ROD DIAMETER = ½"

PIPING/CONDUIT TRANSVERSE TRAPEZE SEISMIC SOLID BRACING SYSTEM 60 PLF MAX

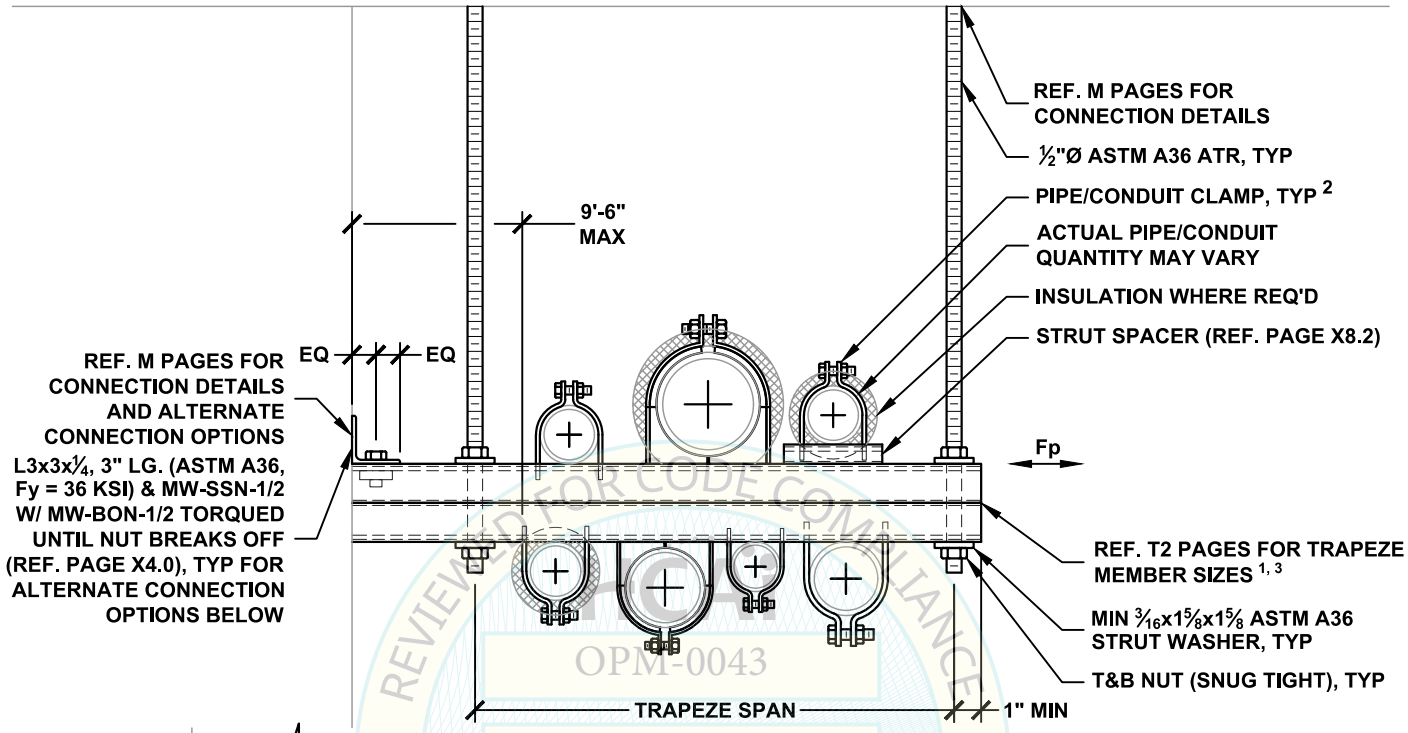

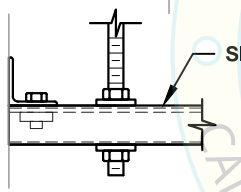

OPTION 1: SINGLE STRUT TRAPEZE

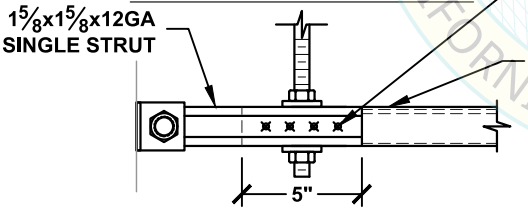

OPTION 2: SINGLE STRUT TRAPEZE

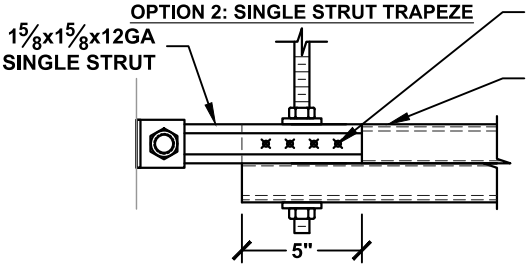

OPTION 3: DOUBLE STRUT TRAPEZE

MAX ALLOWABLE FORCE PER SEISMIC BRACE ASSEMBLY, Fp 2
670 LBS

NOTES:

1. TRAPEZE MEMBER MAY BE PROVIDED WITH ROUND HOLES SIZED FOR HANGER RODS. REF. X7.0 & X7.1 FOR STRUT MEMBER DATA.
2. REF. X8.0 - X8.1.1, X8.6 - X8.6.3 FOR PIPE/CONDUIT CLAMP OPTIONS. CLAMP RATINGS MAY REDUCE MAX ALLOWABLE Fp.
3. DOUBLE STRUT TRAPEZE OPTION SHOWN MAY NOT BE NECESSARY.
4. SEPARATE LONGITUDINAL BRACING SHALL BE PROVIDED FOR THE PIPE/CONDUIT RUN AS DISCUSSED IN SECTION A10.

REVIEWED FOR CODE COMPLIANCE
CALIFORNIA BUILDING CODE, 2022
OPM-0043
BY: William Staehlin
DATE: 01/23/2023

MASON WEST
1601 E. Miraloma Ave. Placentia, CA 92870
TEL (714) 630 - 0701, www.masonwest.com

Jiefu "Jeff" Zhang, SE
California SE No. S5270

PAGE
F4.20

HANGER ROD DIAMETER = ½"

PIPING/CONDUIT ALL DIRECTIONAL TRAPEZE SEISMIC SOLID BRACING SYSTEM 60 PLF MAX

KIT OPTIONS
TS12L
TS1220L
TSH412L
TSH420L

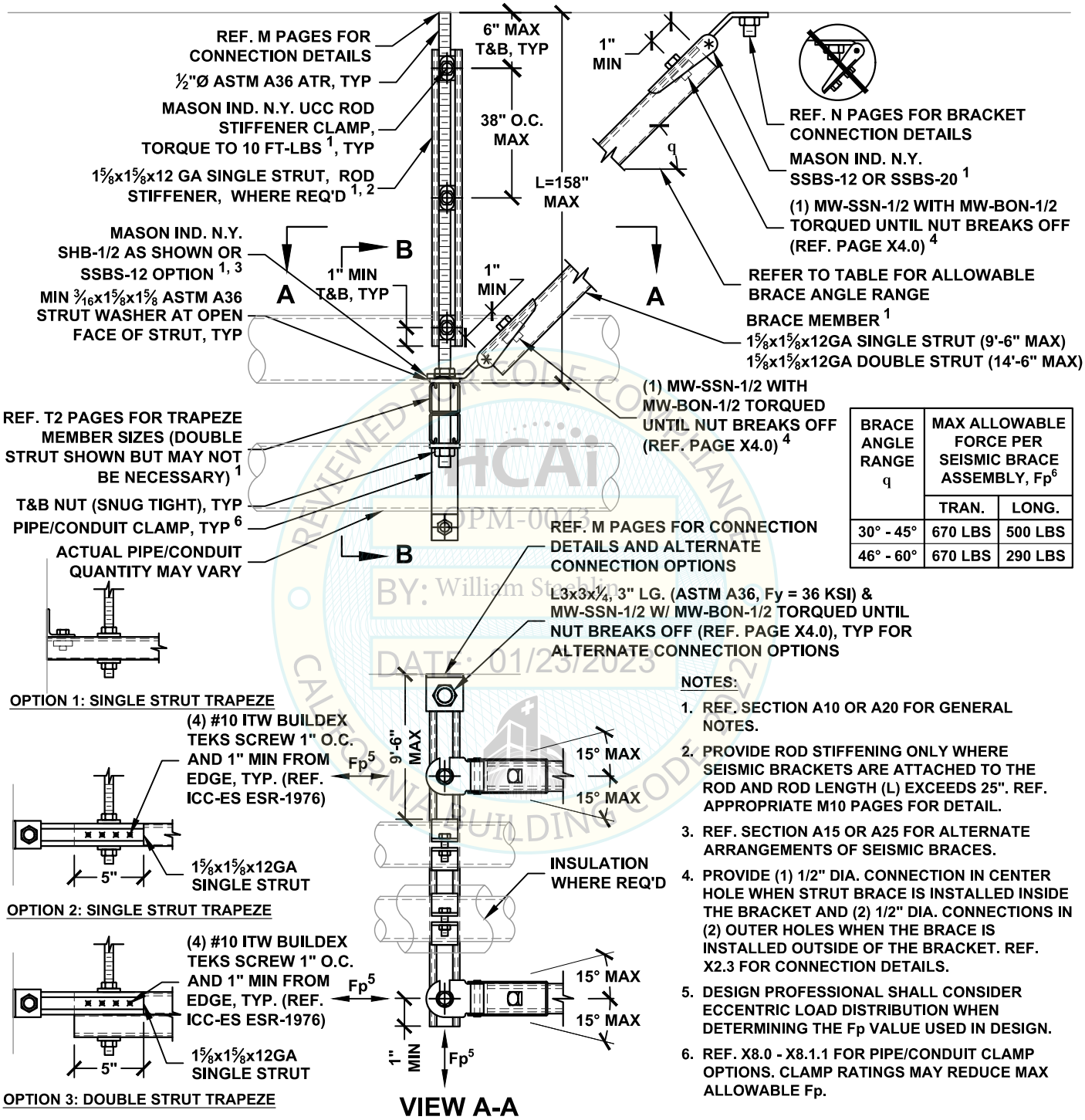

BRACE ANGLE RANGE q	MAX ALLOWABLE FORCE PER SEISMIC BRACE ASSEMBLY, Fp6	
	TRAN.	LONG.
30° - 45°	670 LBS	500 LBS
46° - 60°	670 LBS	290 LBS

NOTES:

1. REF. SECTION A10 OR A20 FOR GENERAL NOTES.
2. PROVIDE ROD STIFFENING ONLY WHERE SEISMIC BRACKETS ARE ATTACHED TO THE ROD AND ROD LENGTH (L) EXCEEDS 25". REF. APPROPRIATE M10 PAGES FOR DETAIL.
3. REF. SECTION A15 OR A25 FOR ALTERNATE ARRANGEMENTS OF SEISMIC BRACES.
4. PROVIDE (1) 1/2" DIA. CONNECTION IN CENTER HOLE WHEN STRUT BRACE IS INSTALLED INSIDE THE BRACKET AND (2) 1/2" DIA. CONNECTIONS IN (2) OUTER HOLES WHEN THE BRACE IS INSTALLED OUTSIDE OF THE BRACKET. REF. X2.3 FOR CONNECTION DETAILS.
5. DESIGN PROFESSIONAL SHALL CONSIDER ECCENTRIC LOAD DISTRIBUTION WHEN DETERMINING THE Fp VALUE USED IN DESIGN.
6. REF. X8.0 - X8.1.1 FOR PIPE/CONDUIT CLAMP OPTIONS. CLAMP RATINGS MAY REDUCE MAX ALLOWABLE Fp.

REVIEWED FOR CODE COMPLIANCE
HCAi
OPM-0043
BY: William Staehlin
DATE: 01/23/2023
CALIFORNIA BUILDING CODE 2022

MASON WEST
1601 E. Miraloma Ave. Placentia, CA 92870
TEL (714) 630 - 0701, www.masonwest.com

Jiefu "Jeff" Zhang, SE
California SE No. S5270

PAGE
F4.22

HANGER ROD DIAMETER = 5/8"

PIPING/CONDUIT TRANSVERSE TRAPEZE SEISMIC SOLID BRACING SYSTEM 100 PLF MAX

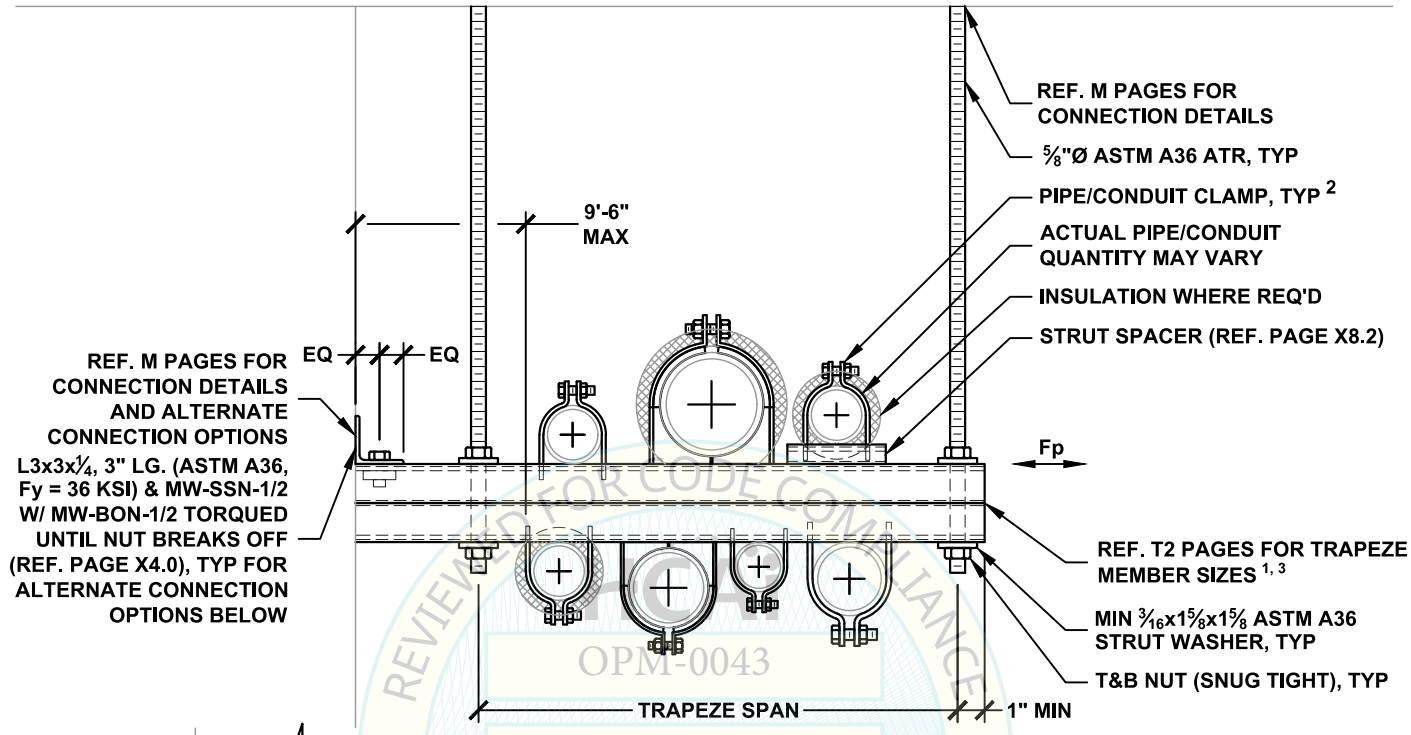

REVIEWED FOR CODE COMPLIANCE
OPM-0043
BY: William Staehlin
DATE: 01/23/2023
CALIFORNIA BUILDING CODE, 2022

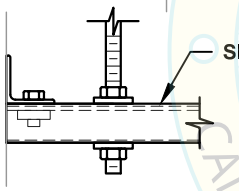

OPTION 1: SINGLE STRUT TRAPEZE

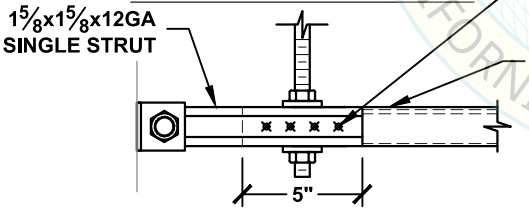

OPTION 2: SINGLE STRUT TRAPEZE

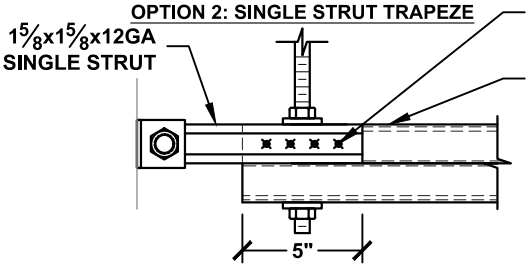

OPTION 3: DOUBLE STRUT TRAPEZE

MAX ALLOWABLE FORCE PER SEISMIC BRACE ASSEMBLY, Fp 2
670 LBS

NOTES:

1. TRAPEZE MEMBER MAY BE PROVIDED WITH ROUND HOLES SIZED FOR HANGER RODS. REF. X7.0 & X7.1 FOR STRUT MEMBER DATA.
2. REF. X8.0 - X8.1.1, X8.6 - X8.6.3 FOR PIPE/CONDUIT CLAMP OPTIONS. CLAMP RATINGS MAY REDUCE MAX ALLOWABLE Fp.
3. DOUBLE STRUT TRAPEZE OPTION SHOWN MAY NOT BE NECESSARY.
4. SEPARATE LONGITUDINAL BRACING SHALL BE PROVIDED FOR THE PIPE/CONDUIT RUN AS DISCUSSED IN SECTION A10.

MASON WEST
1601 E. Miraloma Ave. Placentia, CA 92870
TEL (714) 630 - 0701, www.masonwest.com

Jiefu "Jeff" Zhang, SE
California SE No. S5270

PAGE
F4.30

HANGER ROD DIAMETER = 5/8"

PIPING/CONDUIT ALL-DIRECTIONAL TRAPEZE SEISMIC SOLID BRACING SYSTEM 100 PLF MAX

KIT OPTIONS
TS20L
TSH520L

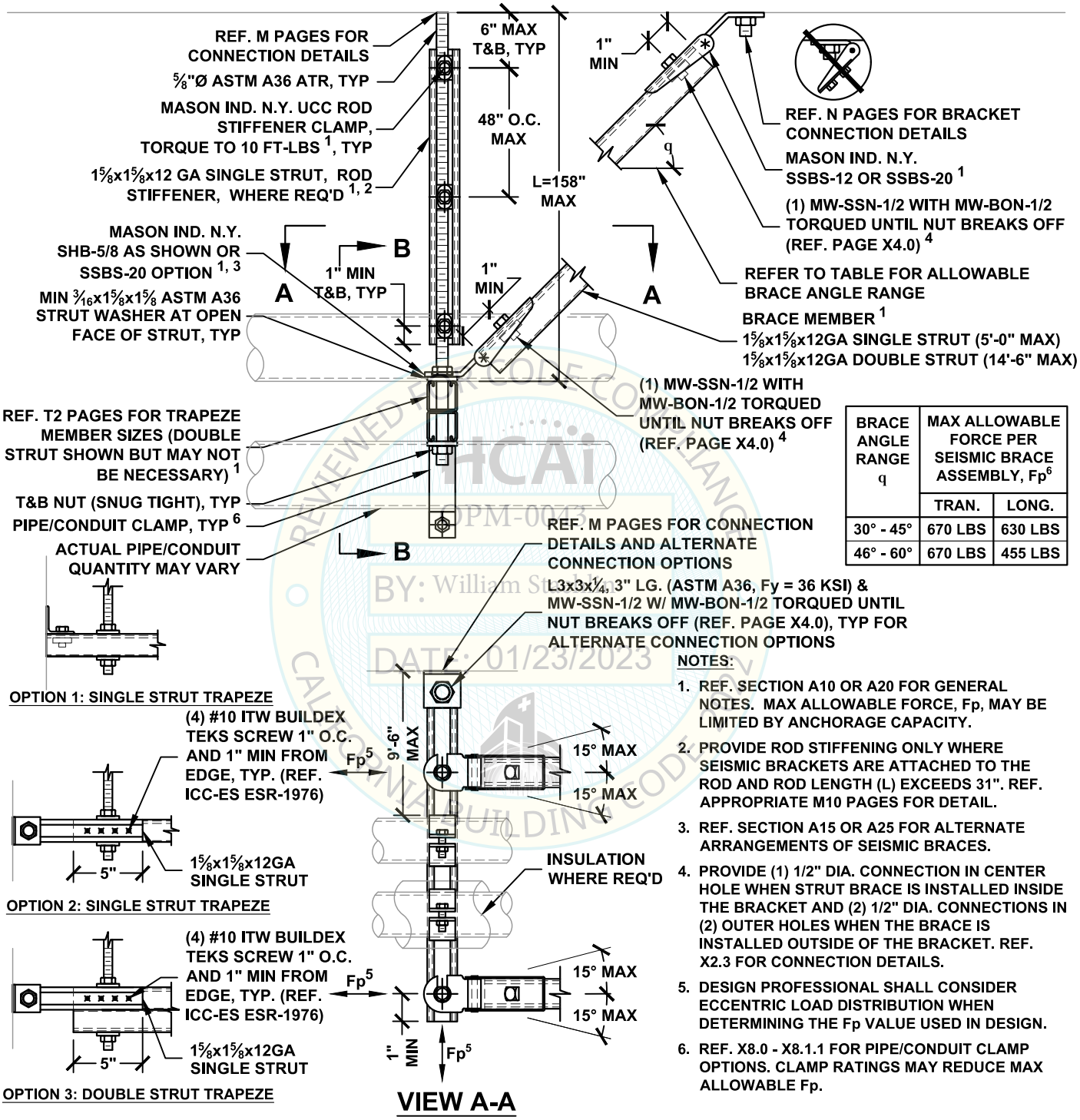

BRACE ANGLE RANGE q	MAX ALLOWABLE FORCE PER SEISMIC BRACE ASSEMBLY, Fp6	
	TRAN.	LONG.
30° - 45°	670 LBS	630 LBS
46° - 60°	670 LBS	455 LBS

NOTES:

1. REF. SECTION A10 OR A20 FOR GENERAL NOTES. MAX ALLOWABLE FORCE, Fp, MAY BE LIMITED BY ANCHORAGE CAPACITY.
2. PROVIDE ROD STIFFENING ONLY WHERE SEISMIC BRACKETS ARE ATTACHED TO THE ROD AND ROD LENGTH (L) EXCEEDS 31". REF. APPROPRIATE M10 PAGES FOR DETAIL.
3. REF. SECTION A15 OR A25 FOR ALTERNATE ARRANGEMENTS OF SEISMIC BRACES.
4. PROVIDE (1) 1/2" DIA. CONNECTION IN CENTER HOLE WHEN STRUT BRACE IS INSTALLED INSIDE THE BRACKET AND (2) 1/2" DIA. CONNECTIONS IN (2) OUTER HOLES WHEN THE BRACE IS INSTALLED OUTSIDE OF THE BRACKET. REF. X2.3 FOR CONNECTION DETAILS.
5. DESIGN PROFESSIONAL SHALL CONSIDER ECCENTRIC LOAD DISTRIBUTION WHEN DETERMINING THE Fp VALUE USED IN DESIGN.
6. REF. X8.0 - X8.1.1 FOR PIPE/CONDUIT CLAMP OPTIONS. CLAMP RATINGS MAY REDUCE MAX ALLOWABLE Fp.

REVIEWED FOR CODE COMPLIANCE
HCAi
OPM-0043
BY: William Staehlin
DATE: 01/23/2023
CALIFORNIA BUILDING CODE

MASON WEST
1601 E. Miraloma Ave. Placentia, CA 92870
TEL (714) 630 - 0701, www.masonwest.com

Jiefu "Jeff" Zhang, SE
California SE No. S5270

PAGE
F4.32

HANGER DESIGNATION, ATTACHMENT AND SECTION NOTES

PIPE OR CONDUIT SIZE	HANGER ROD SIZE	
	DESIGNATION	DIAMETER (INCH)
UP TO 2"	38	3/8
2½" TO 3"	50	1/2
4" TO 5"	63	5/8
6" TO 18"	75	3/4
10" TO 12"	88	7/8
14" TO 18"	100	1
20" TO 24"	125	1¼

LEGEND (HANGER ATTACHMENT TYPE)

X

- ### — DENOTES ATR HANGER SIZE
- X — DENOTES VERTICAL LOAD RATING

VERTICAL LOAD RATING	
DESIGNATION	MAXIMUM ALLOWABLE LOAD (LBS)
A	75
B	125
C	175
D	250
E	350
F	450
G	575
H	700
J	850
K	1000
L	1250
M	1600
N	2000
P	2500
Q	3500
R	5000
S	7500
T	11000

DISTRIBUTION SYSTEM			HANGER ROD SIZE	
PIPE/CONDUIT	DUCTWORK	CABLE TRAY	DESIGNATION	DIAMETER (INCH)
30 LBS/FT	30 LBS/FT	20 LBS/FT	38	3/8
60 LBS/FT	60 LBS/FT	45 LBS/FT	50	1/2
100 LBS/FT	100 LBS/FT	85 LBS/FT	63	5/8
300 LBS/FT			75	3/4
500 LBS/FT			100	1
500 LBS/FT			125	1¼

NOTES:

1 - "M" SERIES PAGES ARE COMPRISED OF HANGER ANCHORAGE CAPACITIES FOR VARIOUS TYPES OF ANCHORAGE CONDITIONS AT SEISMIC BRACE LOCATIONS ONLY. EACH HANGER ATTACHMENT TYPE IS DESIGNATED BY A SET OF NUMBERS AND A LETTER. THE NUMBERS REPRESENTS THE HANGER ROD SIZE (FOUND IN THE HANGER ROD SIZE TABLE) AND THE LETTER REPRESENTS THE MAXIMUM ALLOWABLE LOAD (FOUND IN THE VERTICAL LOAD RATING TABLE).

EXAMPLE: 38H REPRESENTS HANGER ROD SIZE OF ⅜"Ø WITH A MAXIMUM ALLOWABLE VERTICAL LOAD RATING OF 700 LBS.

2 - HANGER ANCHORAGE ATTACHMENTS TO STRUCTURE MAY BE USED WITH ANY ONE OF "M" SERIES PAGES, PROVIDED HANGER ATTACHMENT SIZE IS APPROPRIATE FOR THE APPLICATION AND THE ALLOWABLE VERTICAL LOAD CAPACITY IS MET.

3 - STRUCTURAL ENGINEER OF RECORD TO VERIFY ADEQUACY OF THE STRUCTURE FROM LOADING IMPOSED BY VERTICAL HANGER ATTACHMENT.

4 - WHERE ROD STIFFENER IS REQUIRED, SEE M10.12.

5 - NOT USED.

6 - HANGER ROD MAY BE INSTALLED UP TO 6 DEGREES FROM PERPENDICULAR TO CONCRETE SURFACE.

7 - WHEN CONCRETE ANCHORS ARE INSTALLED AT THE BOTTOM OF THE CONCRETE FILLED METAL DECK, MINIMUM END DISTANCE AND SPACING REQUIREMENTS ARE ALONG FLUTE LENGTH ONLY.

8 - SEE X7.0 AND X7.1 FOR STRUT MEMBER DATA. FOR CONDITIONS WHERE HOLES THROUGH STRUT MEMBERS ARE REQ'D, HOLES SHALL BE STD SIZE HOLES, TYP, U.N.O. WHERE PUNCHED STRUT OR HOLES ARE REQ'D, MIN. SPACING, EDGE, AND END DISTANCES SHALL BE MAINTAINED AS REQ'D PER DETAIL.

9 - ALL-THREAD RODS MUST BE MADE OF A36, A307 (GRADE A OR B), OR F1554 GR36 STEEL. ROD COUPLERS MUST CONFORM TO ASTM A563 STEEL WITH A MINIMUM OF 58 KSI TENSILE STRENGTH. MINIMUM ENGAGEMENT INTO ROD COUPLER MUST BE EQUAL TO THE ATR DIAMETER. ATR HANGER IS PERMITTED FOR COMPRESSION AND TENSION LOADING CONDITIONS ONLY; NO SHEAR LOADING.

10 - ALL CONCRETE FLAT SLABS, WALLS, AND BEAMS MUST HAVE A MINIMUM OF #4 BAR OR GREATER BETWEEN THE ANCHOR AND THE EDGE OF CONCRETE.

11 - DESIGN IS CONTROLLED BY SEISMIC FORCES. NON-SEISMIC FORCES SUCH AS GRAVITY ARE OUTSIDE THE SCOPE OF THIS OPM.

12 - POST-INSTALLED ANCHORS MAY BE INSTALLED A MINIMUM OF 3 BOLT DIAMETERS AWAY FROM ABANDONED HOLES, AND A MINIMUM OF 1.5 BOLT DIAMETERS AWAY FROM DRYPACK MORTAR FILLED HOLES. DRYPACK MORTAR SHALL HAVE A COMPRESSIVE STRENGTH EQUAL OR GREATER THAN THE CONCRETE STRENGTH IN WHICH IT IS BEING USED.

13 - THE HANGER ROD AT SEISMIC BRACE LOCATIONS IS SUBJECTED TO GRAVITY LOADS AS WELL AS LATERAL AND VERTICAL SEISMIC LOADS AND HAS BEEN DESIGNED FOR SUCH COMBINED LOADING IN COMPLIANCE WITH THE CALIFORNIA BUILDING CODE, CALIFORNIA OSHPD AND STANDARD STRUCTURAL STEEL PRACTICES AND ARE NOT SUBJECT TO THE HANGER ROD DIAMETERS DESIGNED FOR GRAVITY LOADS ONLY THAT MAY BE OUTLINED IN PROJECT SPECIFICATIONS, CODE DOCUMENTS, TRADE GUIDELINES, ETC. IN ORDER TO ENSURE THE DELIVERY OF SEISMIC BRACE COMPONENTS THAT MATCH FIELD ERECTED HANGERS, ALL HANGER RODS FOR INDIVIDUAL PIPES AND TRAPEZED SYSTEMS AT SEISMIC BRACE LOCATIONS SHOULD ADHERE TO THE TABLES ABOVE.

14 - PER CBC SECTION 1905A.1.9, CONCRETE COMPRESSIVE STRENGTH, f'c, SHALL BE LIMITED TO 8,000 PSI MAX, BUT MAY BE INCREASED SUBJECT TO OSHPD REVIEW AND APPROVAL ON A PROJECT BY PROJECT BASIS.

ACCEPTANCE FOR CODE COMPLIANCE LIMITED TO ITEMS EXPLICITLY LISTED IN ACCEPTANCE LETTER
BY: William Staehlin
DATE: 01/20/2023
FOR OSHPD BUILDING PROJECTS

MASON WEST
1601 E. Miraloma Ave. Placentia, CA 92870
TEL (714) 630 - 0701, www.masonwest.com

Jiefu "Jeff" Zhang, SE
California SE No. S5270

PAGE
M0.00

HANGER ATTACHMENT
TO CONCRETE SLAB AND BEAM
WITH (1) DEWALT/POWERS POWER-STUD+ SD1 CONCRETE ANCHOR

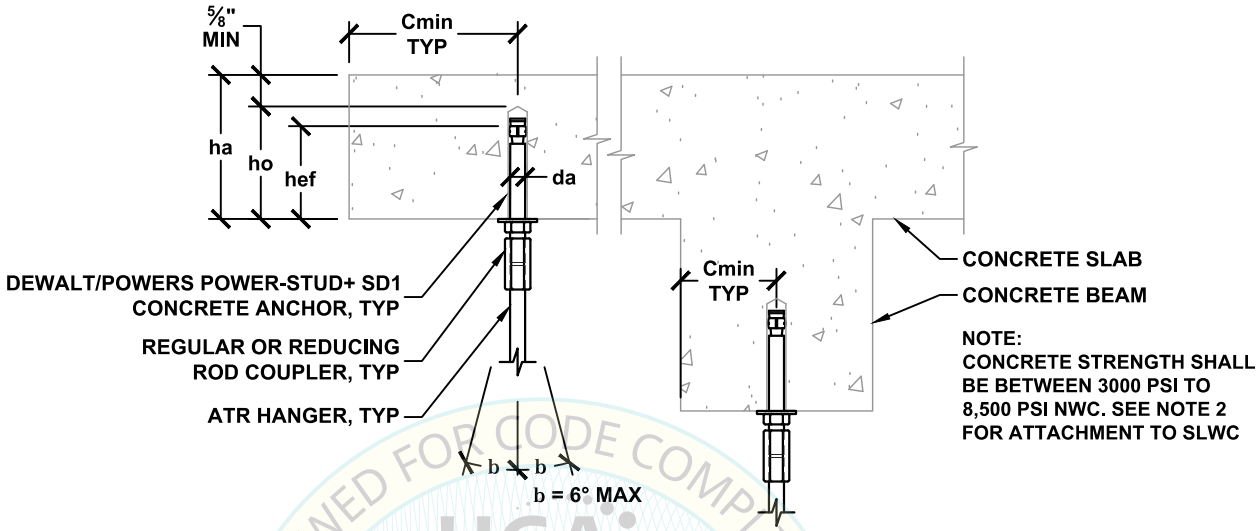

REVIEWED FOR CODE COMPLIANCE
HCAi
OPM-0043
BY: William Staehlin
DATE: 01/23/2023
CALIFORNIA BUILDING CODE

HANGER ATTACHMENT TYPE	ALLOWABLE VERTICAL LOAD Ta [1,2] LBS	ATR HANGER DIA. INCH	DEWALT/POWERS POWER-STUD+ SD1 CONCRETE ANCHOR (ICC ESR-2818) SPECIAL INSPECTION REQ'D						
			DIA. da INCH	MIN EFF. EMBED. hef INCH	MIN HOLE DEPTH ho INCH	MIN BASE TH. ha INCH	MIN EDGE Cmin INCH	MIN SPACING Smin INCH	TORQUE REQ'D FT-LBS
38A TO 38J	910	3/8	3/8	2	2 5/8	4	4 1/2	6	20
38A TO 38K	1120	3/8	1/2	3 1/4	4	6	4 1/2	9 3/4	40
50A TO 50K	1120	1/2							
63A TO 63K	1120	5/8							
50A TO 50M	1740	1/2	5/8	2 3/4	3 3/4	6	6	8 1/4	80
63A TO 63M	1740	5/8							
75A TO 75M	1740	3/4							

SEE DETAIL M0.00 FOR SECTION NOTES

[1] ALLOWABLE LOADS HAVE BEEN INCREASED BY A FACTOR OF 1.2 FOR LOAD COMBINATIONS INCLUDING OVERSTRENGTH, Ω_0, PER ASCE 7-10 SEC. 12.4.3.3.

[2] FOR SLWC SLAB AND BEAM, REDUCE ALLOWABLE VERTICAL LOAD BY MULTIPLYING ALLOWABLE LOAD BY A FACTOR OF 0.6.

MASON WEST
1601 E. Miraloma Ave. Placentia, CA 92870
TEL (714) 630 - 0701, www.masonwest.com

Jiefu "Jeff" Zhang, SE
California SE No. S5270

PAGE
M1.30

HANGER ATTACHMENT
TO CONCRETE SLAB AND BEAM
WITH (2) DEWALT/POWERS POWER-STUD+ SD1 CONCRETE ANCHORS

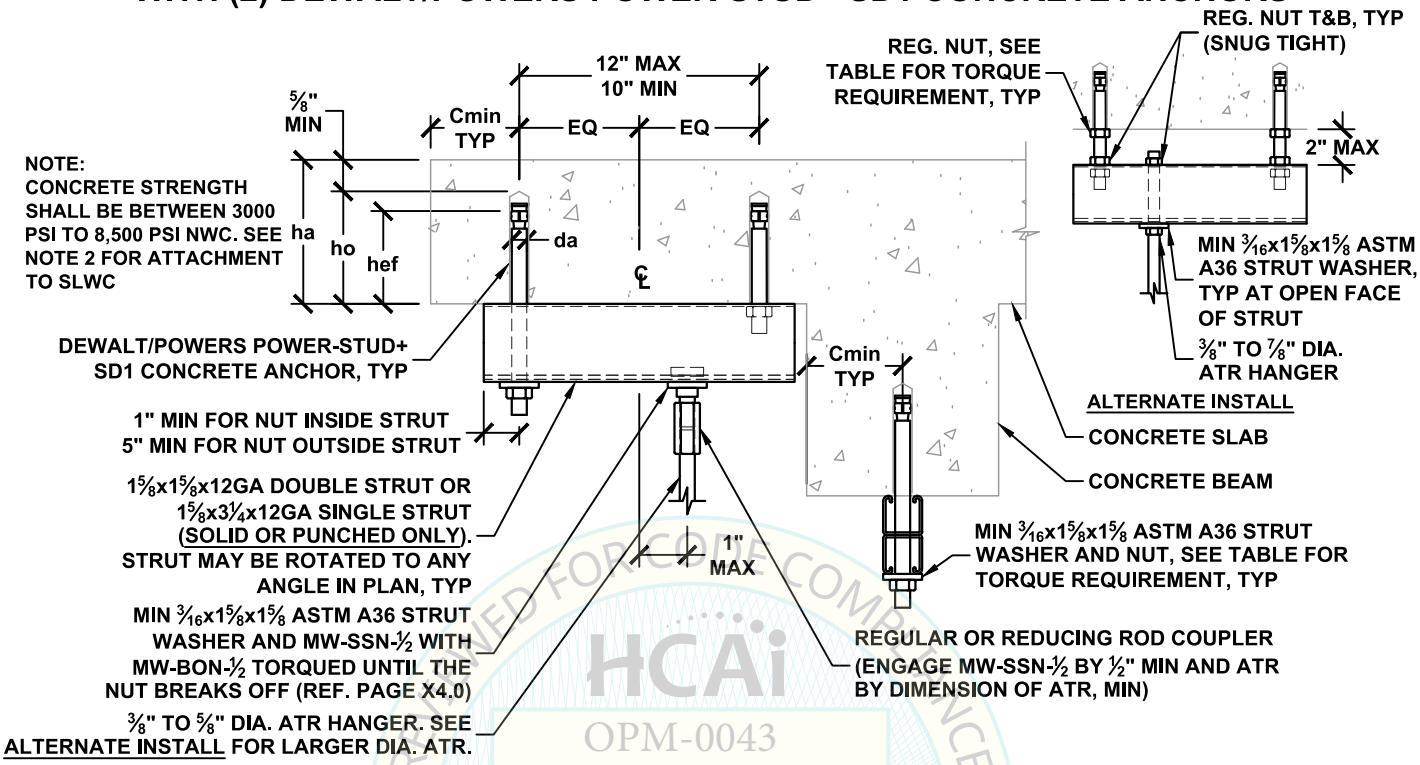

HANGER ATTACHMENT TYPE	STEEL COMPONENT ALLOWABLE VERTICAL LOAD Ta LBS	HANGER ATTACHMENT TYPE	CONCRETE ANCHOR ALLOWABLE VERTICAL LOAD Tac [1,2] LBS	ATR HANGER DIA. INCH	DEWALT/POWERS POWER-STUD+ SD1 CONCRETE ANCHOR (ICC ESR-2818) SPECIAL INSPECTION REQ'D						
					DIA. da INCH	MIN EFF. EMBED. hef INCH	MIN HOLE DEPTH ho INCH	MIN BASE TH. ha INCH	MIN EDGE Cmin INCH	MIN SPACING Smin INCH	TORQUE REQ'D FT-LBS
38A TO 38N	2400	38A TO 38L	1520	3/8	3/8	2	2 5/8	4	4 1/2	6	20
50A TO 50P	2620	50A TO 50L	1520	1/2							
63A TO 63P	2620	63A TO 63L	1520	5/8							
75A TO 75P	2620	75A TO 75L	1520	3/4							
88A TO 88P	2620	88A TO 88L	1520	7/8							
38A TO 38N	2400	38A TO 38M	1870	3/8	1/2	3 1/4	4	6	4 1/2	9 3/4	40
50A TO 50P	2620	50A TO 50M	1870	1/2							
63A TO 63P	2620	63A TO 63M	1870	5/8							
75A TO 75P	2620	75A TO 75M	1870	3/4							
88A TO 88P	2620	88A TO 88M	1870	7/8							

SEE DETAIL M0.00 FOR SECTION NOTES

[1] ALLOWABLE LOADS HAVE BEEN INCREASED BY A FACTOR OF 1.2 FOR LOAD COMBINATIONS INCLUDING OVERSTRENGTH, Ω_0, PER ASCE 7-10 SEC. 12.4.3.3.

[2] FOR SLWC SLAB AND BEAM, REDUCE CONCRETE ANCHOR ALLOWABLE VERTICAL LOAD BY MULTIPLYING ALLOWABLE LOAD BY A FACTOR OF 0.6.

[3] ATR HANGER PERMITTED FOR COMPRESSION AND TENSION LOADING CONDITIONS ONLY. NO SHEAR LOADING.

MASON WEST
1601 E. Miraloma Ave. Placentia, CA 92870
TEL (714) 630 - 0701, www.masonwest.com

Jiefu "Jeff" Zhang, SE
California SE No. S5270

PAGE
M1.31

HCAi OPM-0043 BY: William Staehlin 01/23/2023 REVIEWED FOR CODE COMPLIANCE CALIFORNIA BUILDING CODE

HANGER ATTACHMENT
TO CONCRETE SLAB AND BEAM
WITH (2) DEWALT/POWERS POWER-STUD+ SD1 CONCRETE ANCHORS

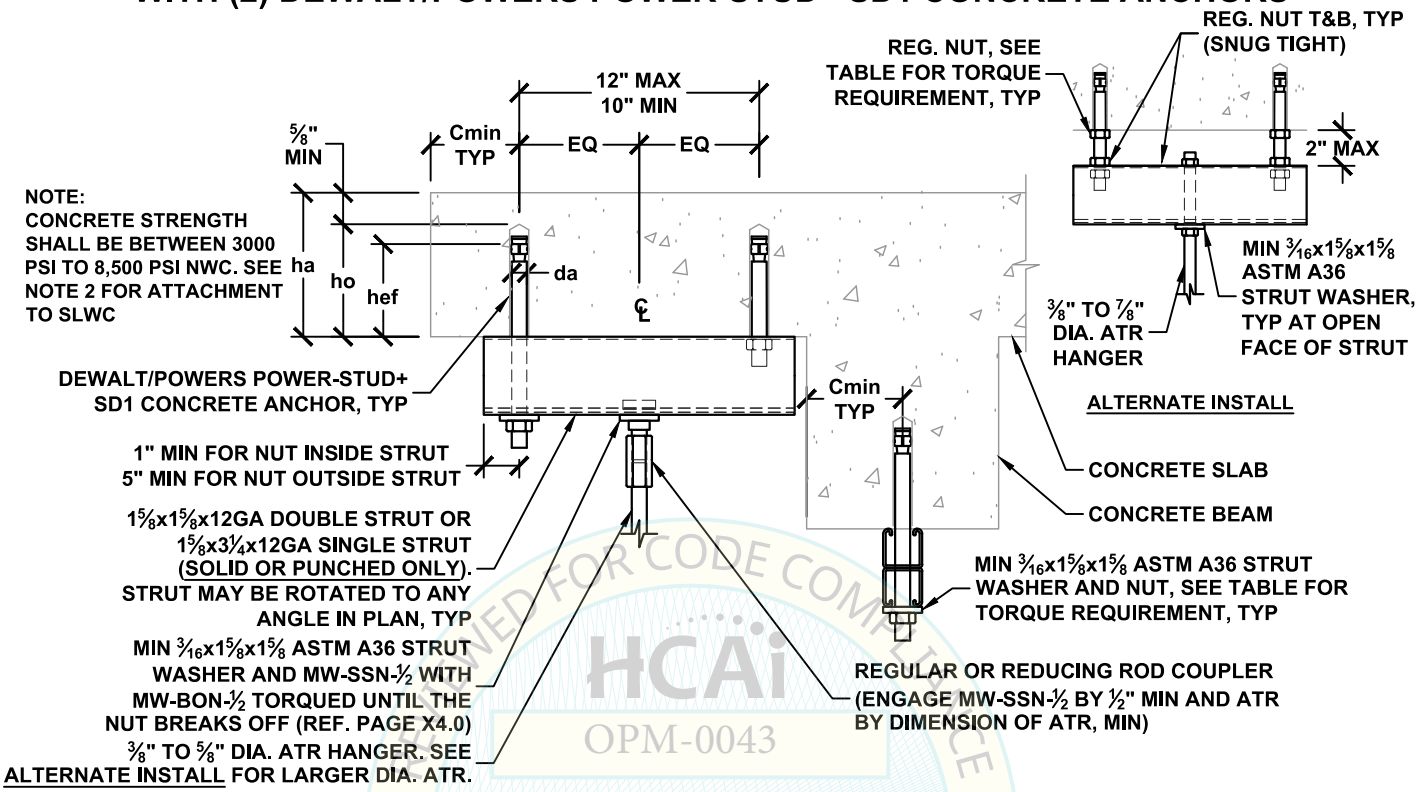

HANGER ATTACHMENT TYPE	STEEL COMPONENT ALLOWABLE VERTICAL LOAD Ta LBS	HANGER ATTACHMENT TYPE	CONCRETE ANCHOR ALLOWABLE VERTICAL LOAD Tac [1,2] LBS	ATR HANGER DIA. INCH	DEWALT/POWERS POWER-STUD+ SD1 CONCRETE ANCHOR (ICC ESR-2818) SPECIAL INSPECTION REQ'D					
					DIA. da INCH	MIN EFF. EMBED. hef INCH	MIN HOLE DEPTH ho INCH	MIN BASE TH. ha INCH	MIN EDGE Cmin INCH	MIN SPACING Smin INCH	TORQUE REQ'D FT-LBS
38A TO 38N	2400	38A TO 38M	1820	3/8	3/8	2	2 5/8	4	4 1/2	6	20
50A TO 50P	2620	50A TO 50M	1820	1/2							
63A TO 63P	2620	63A TO 63M	1820	5/8							
75A TO 75P	2620	75A TO 75M	1820	3/4							
88A TO 88P	2620	88A TO 88N	1820	7/8							
38A TO 38N	2400	38A TO 38N	2240	3/8	1/2	3 1/4	4	6	4 1/2	9 3/4	40
50A TO 50P	2620	50A TO 50N	2240	1/2							
63A TO 63P	2620	63A TO 63N	2240	5/8							
75A TO 75P	2620	75A TO 75N	2240	3/4							
88A TO 88P	2620	88A TO 88N	2240	7/8							

SEE DETAIL M0.00 FOR SECTION NOTES

[1] ALLOWABLE LOADS HAVE BEEN INCREASED BY A FACTOR OF 1.2 FOR LOAD COMBINATIONS INCLUDING OVERSTRENGTH, Ω_0, PER ASCE 7-10 SEC. 12.4.3.3.

[2] FOR SLWC SLAB AND BEAM, REDUCE CONCRETE ANCHOR ALLOWABLE VERTICAL LOAD BY MULTIPLYING ALLOWABLE LOAD BY A FACTOR OF 0.6.

MASON WEST
1601 E. Miraloma Ave. Placentia, CA 92870
TEL (714) 630 - 0701, www.masonwest.com

Jiefu "Jeff" Zhang, SE
California SE No. S5270

PAGE
M1.31.1

REVIEWED FOR CODE COMPLIANCE HCAi OPM-0043 BY: William Staehlin 01/23/2023 CALIFORNIA BUILDING CODE

HANGER ATTACHMENT
TO CONCRETE SLAB AND BEAM
WITH (2) DEWALT/POWERS POWER-STUD+ SD1 CONCRETE ANCHORS

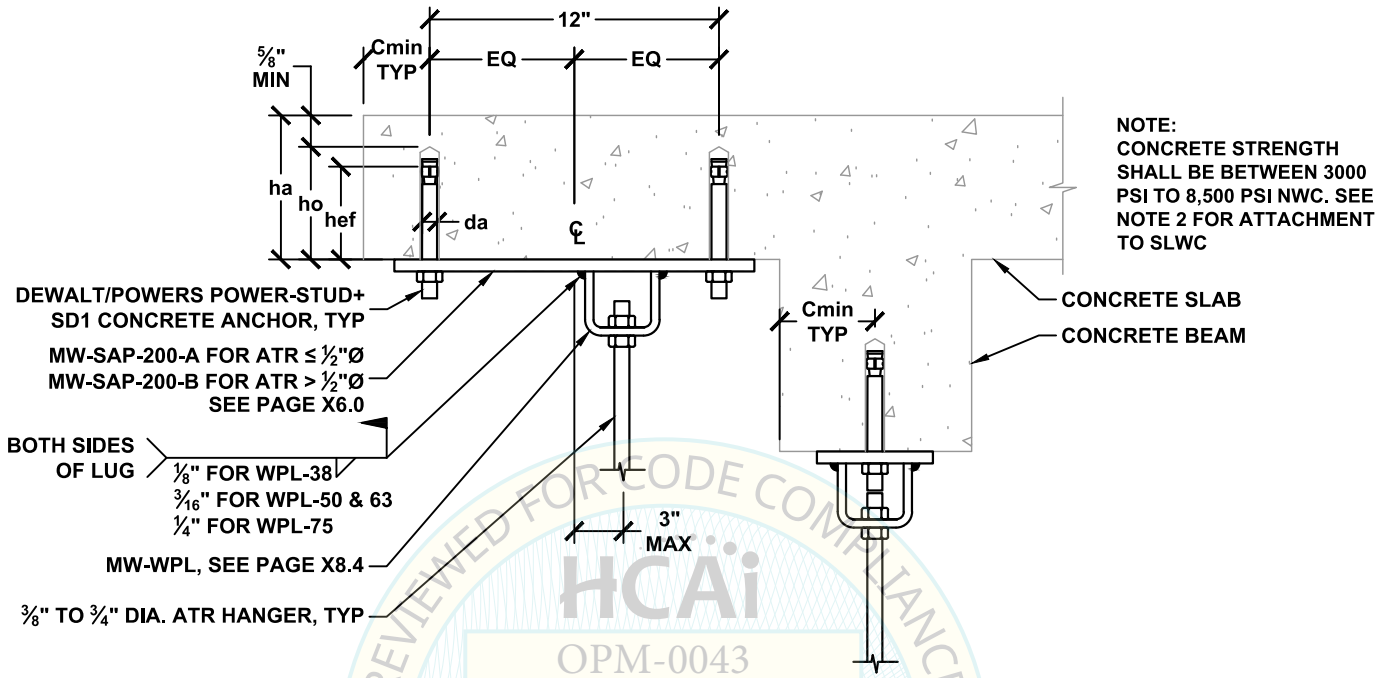

REVIEWED FOR CODE COMPLIANCE
HCAi
OPM-0043
BY: William Staehlin
DATE: 01/23/2023
CALIFORNIA BUILDING CODE 2022

HANGER ATTACHMENT TYPE	STEEL COMPONENT ALLOWABLE VERTICAL LOAD Ta LBS	HANGER ATTACHMENT TYPE	CONCRETE ANCHOR ALLOWABLE VERTICAL LOAD Tac [1,2] LBS	ATR HANGER DIA. INCH	DEWALT/POWERS POWER-STUD+ SD1 CONCRETE ANCHOR (ICC ESR-2818) SPECIAL INSPECTION REQ'D						
					DIA. da INCH	MIN EFF. EMBED. hef INCH	MIN HOLE DEPTH ho INCH	MIN BASE TH. ha INCH	MIN EDGE Cmin INCH	MIN SPACING Smin INCH	TORQUE REQ'D FT-LBS
38A TO 38H	720	38A TO 38N	2320	⅜	⅝	2¾	3¾	6	6	8¼	80
50A TO 50K	1080	50A TO 50N	2320	½							
63A TO 63M	1930	63A TO 63N	2320	⅝							
75A TO 75M	1930	75A TO 75N	2320	¾							

SEE DETAIL M0.00 FOR SECTION NOTES

[1] ALLOWABLE LOADS HAVE BEEN INCREASED BY A FACTOR OF 1.2 FOR LOAD COMBINATIONS INCLUDING OVERSTRENGTH, Ω_0, PER ASCE 7-10 SEC. 12.4.3.3.

[2] FOR SLWC SLAB AND BEAM, REDUCE CONCRETE ANCHOR ALLOWABLE VERTICAL LOAD BY MULTIPLYING ALLOWABLE LOAD BY A FACTOR OF 0.6.

MASON WEST
1601 E. Miraloma Ave. Placentia, CA 92870
TEL (714) 630 - 0701, www.masonwest.com

Jiefu "Jeff" Zhang, SE
California SE No. S5270

PAGE
M1.32

HANGER ATTACHMENT
TO CONCRETE SLAB AND BEAM
WITH (4) DEWALT/POWERS POWER-STUD+ SD1 CONCRETE ANCHORS

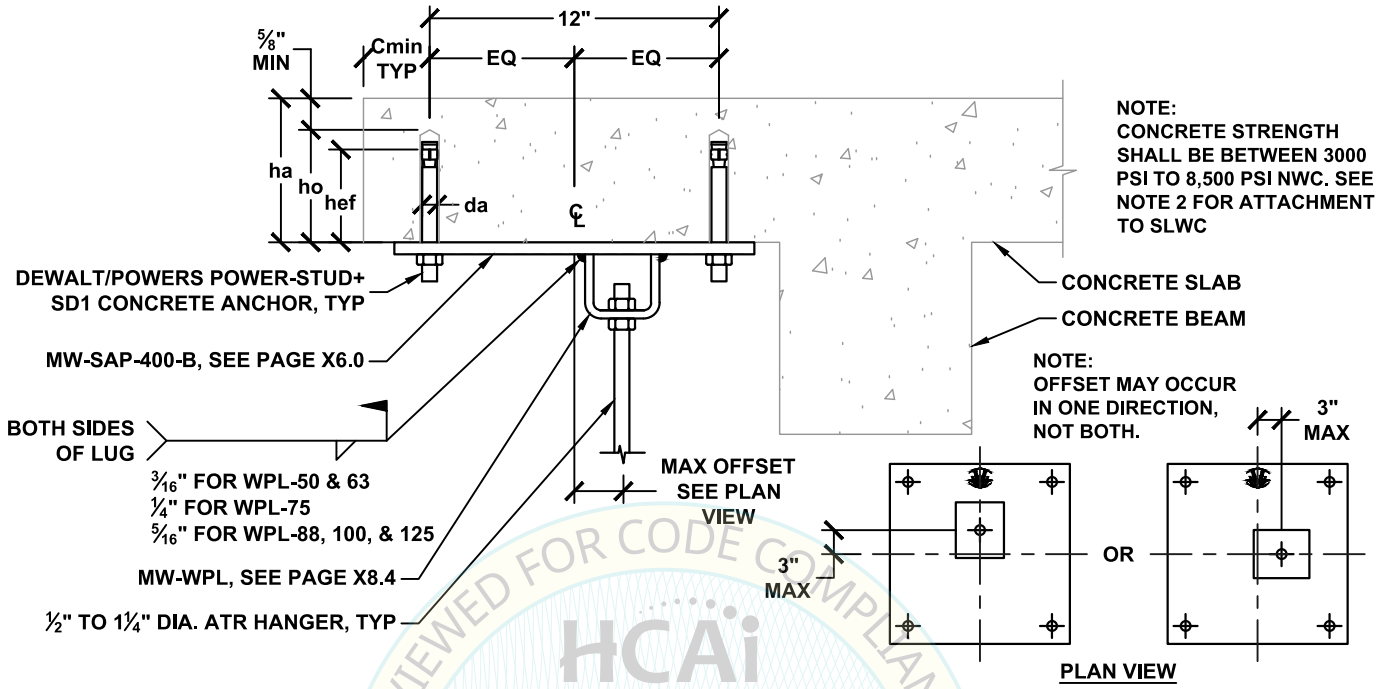

HCAi
OPM-0043
BY: William Staehlin
DATE: 01/23/2023
REVIEWED FOR CODE COMPLIANCE
CALIFORNIA BUILDING CODE, 2022

HANGER ATTACHMENT TYPE	STEEL COMPONENT ALLOWABLE VERTICAL LOAD Ta LBS	HANGER ATTACHMENT TYPE	CONCRETE ANCHOR ALLOWABLE VERTICAL LOAD Tac [1,2] LBS	ATR HANGER DIA. INCH	DEWALT/POWERS POWER-STUD+ SD1 CONCRETE ANCHOR (ICC ESR-2818) SPECIAL INSPECTION REQ'D						
					DIA. da INCH	MIN EFF. EMBED. hef INCH	MIN HOLE DEPTH ho INCH	MIN BASE TH. ha INCH	MIN EDGE Cmin INCH	MIN SPACING Smin INCH	TORQUE REQ'D FT-LBS
50A TO 50L	1320	50A TO 50Q	4640	1/2	5/8	2 3/4	3 3/4	6	6	8 1/4	80
63A TO 63P	2880	63A TO 63Q	4640	5/8							
75A TO 75Q	3600	75A TO 75Q	4640	3/4							
88A TO 88Q	3600	88A TO 88Q	4640	7/8							
100A TO 100Q	3600	100A TO 100Q	4640	1							
125A TO 125Q	3600	125A TO 125Q	4640	1 1/4							

SEE DETAIL M0.00 FOR SECTION NOTES

[1] ALLOWABLE LOADS HAVE BEEN INCREASED BY A FACTOR OF 1.2 FOR LOAD COMBINATIONS INCLUDING OVERSTRENGTH, Ω_0, PER ASCE 7-10 SEC. 12.4.3.3.

[2] FOR SLWC SLAB AND BEAM, REDUCE CONCRETE ANCHOR ALLOWABLE VERTICAL LOAD BY MULTIPLYING ALLOWABLE LOAD BY A FACTOR OF 0.6.

MASON WEST
1601 E. Miraloma Ave. Placentia, CA 92870
TEL (714) 630 - 0701, www.masonwest.com

Jiefu "Jeff" Zhang, SE
California SE No. S5270

PAGE
M1.33

HANGER ATTACHMENT
TO CONCRETE SLAB AND BEAM
WITH (1) MASON IND. N.Y. SAS(E) CONCRETE ANCHOR

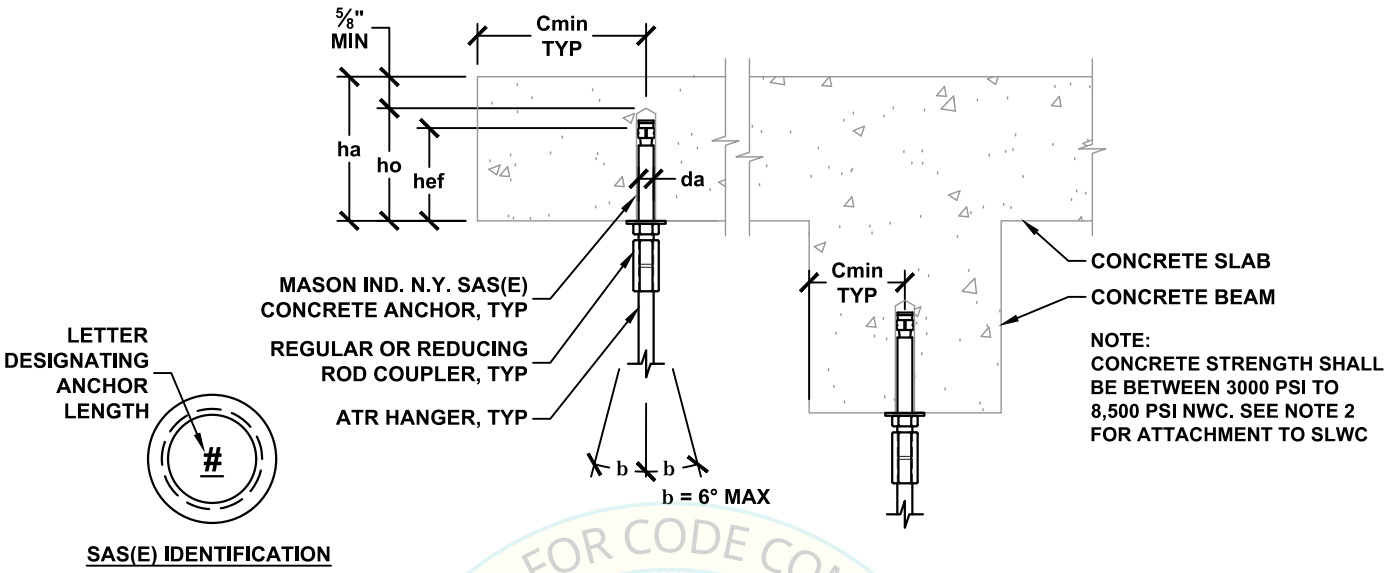

HANGER ATTACHMENT TYPE	ALLOWABLE VERTICAL LOAD Ta [1,2] LBS	ATR HANGER DIA. INCH	MASON IND. N.Y. SAS(E) CONCRETE ANCHOR (ICC ESR-3037) SPECIAL INSPECTION REQ'D						
			DIA. da INCH	MIN EFF. EMBED. hef INCH	MIN HOLE DEPTH ho INCH	MIN BASE TH. ha INCH	MIN EDGE Cmin INCH	MIN SPACING Smin INCH	TORQUE REQ'D FT-LBS
38A TO 38K	1240	⅜	⅜	2½	3	4½	6	7½	30
38A TO 38L	1290	⅜	½	2¼	3	4½	7	6¾	60
50A TO 50L	1290	½							
63A TO 63L	1290	⅝							
38A TO 38M	1680	⅜	½	3⅜	4⅛	6	7	10⅛	60
50A TO 50M	1680	½							
63A TO 63M	1680	⅝							
50A TO 50P	3090	½	⅝	4½	5⅜	8	7	13½	90
63A TO 63P	3090	⅝							
75A TO 75P	3090	¾							
63A TO 63Q	3810	⅝	¾	5	6	9	7	15	150
75A TO 75Q	3810	¾							
88A TO 88Q	3810	⅞							

SEE DETAIL M0.00 FOR SECTION NOTES

[1] ALLOWABLE LOADS HAVE BEEN INCREASED BY A FACTOR OF 1.2 FOR LOAD COMBINATIONS INCLUDING OVERSTRENGTH, Ω_0, PER ASCE 7-10 SEC. 12.4.3.3.

[2] FOR SLWC SLAB AND BEAM, REDUCE ALLOWABLE VERTICAL LOAD BY MULTIPLYING ALLOWABLE LOAD BY A FACTOR OF 0.6.

REVIEWED FOR CODE COMPLIANCE
HCAi
OPM-0043
BY: William Staehlin
DATE: 01/23/2023
CALIFORNIA BUILDING CODE 2022

MASON WEST
1601 E. Miraloma Ave. Placentia, CA 92870
TEL (714) 630 - 0701, www.masonwest.com

Jiefu "Jeff" Zhang, SE
California SE No. S5270

PAGE
M1.40

HANGER ATTACHMENT TO CONCRETE SLAB AND BEAM WITH (2) MASON IND. N.Y. SAS(E) CONCRETE ANCHORS

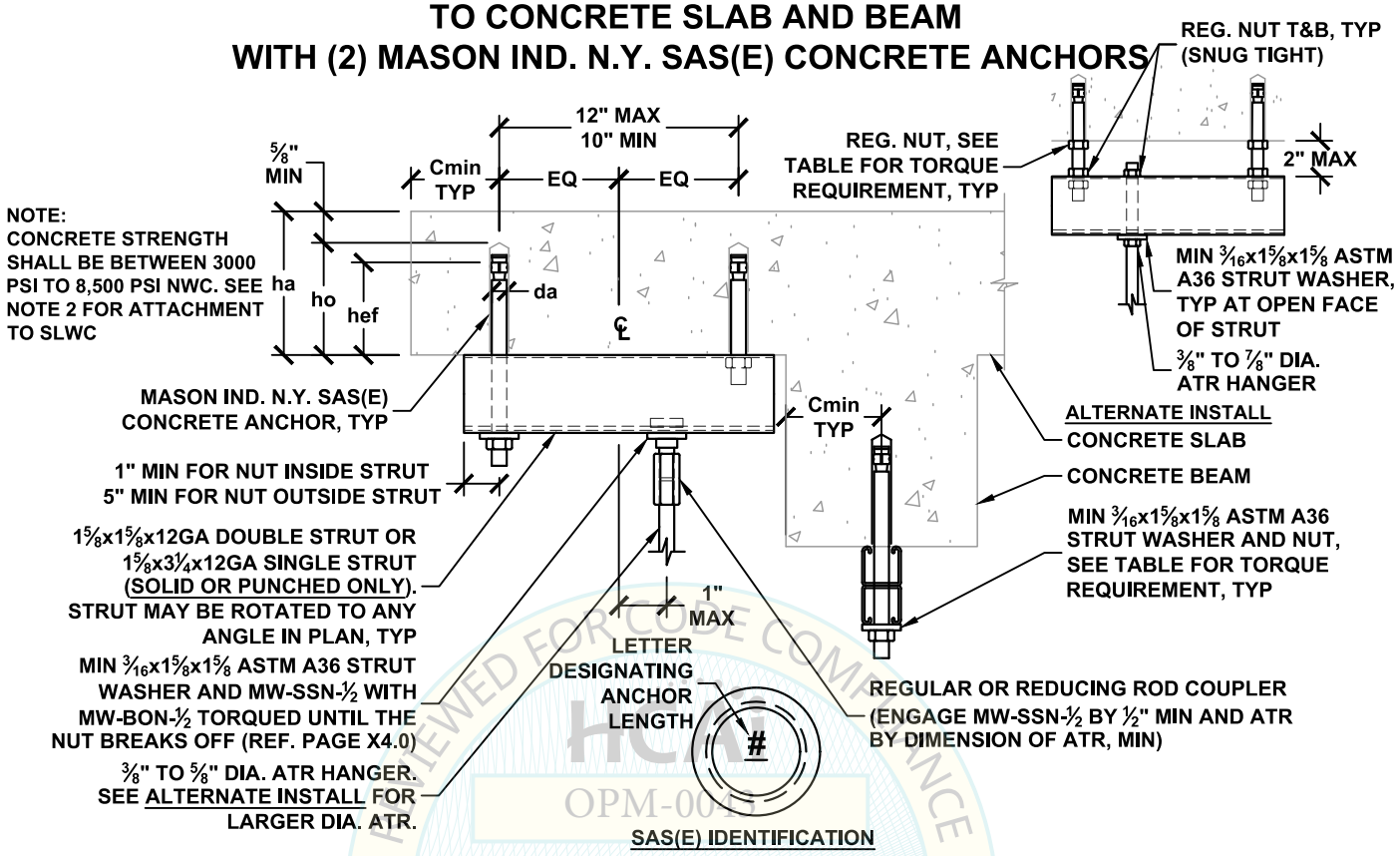

REVIEWED FOR CODE COMPLIANCE
HCAI
OPM-0043
BY: William Staehlin
DATE: 01/23/2023
CALIFORNIA BUILDING CODE

HANGER ATTACHMENT TYPE	STEEL COMPONENT ALLOWABLE VERTICAL LOAD Ta LBS	HANGER ATTACHMENT TYPE	CONCRETE ANCHOR ALLOWABLE VERTICAL LOAD Tac [1,2] LBS	ATR HANGER DIA. INCH	MASON IND. N.Y. SAS(E) CONCRETE ANCHOR (ICC ESR-3037) SPECIAL INSPECTION REQ'D						
					DIA. da INCH	MIN EFF. EMBED. hef INCH	MIN HOLE DEPTH ho INCH	MIN BASE TH. ha INCH	MIN EDGE Cmin INCH	MIN SPACING Smin INCH	TORQUE REQ'D FT-LBS
38A TO 38N	2400	38A TO 38N	2070	3/8	3/8	2 1/2	3	4 1/2	6	7 1/2	30
50A TO 50P	2620	50A TO 50N	2070	1/2							
63A TO 63P	2620	63A TO 63N	2070	5/8							
75A TO 75P	2620	75A TO 75N	2070	3/4							
88A TO 88P	2620	88A TO 88N	2070	7/8							
38A TO 38N	2400	38A TO 38N	2150	3/8	1/2	2 1/4	3	4 1/2	7	6 3/4	60
50A TO 50P	2620	50A TO 50N	2150	1/2							
63A TO 63P	2620	63A TO 63N	2150	5/8							
75A TO 75P	2620	75A TO 75N	2150	3/4							
88A TO 88P	2620	88A TO 88N	2150	7/8							

SEE DETAIL M0.00 FOR SECTION NOTES

[1] ALLOWABLE LOADS HAVE BEEN INCREASED BY A FACTOR OF 1.2 FOR LOAD COMBINATIONS INCLUDING OVERSTRENGTH, Ω_0, PER ASCE 7-10 SEC. 12.4.3.3.

[2] FOR SLWC SLAB AND BEAM, REDUCE CONCRETE ANCHOR ALLOWABLE VERTICAL LOAD BY MULTIPLYING ALLOWABLE LOAD BY A FACTOR OF 0.6.

[3] ATR HANGER PERMITTED FOR COMPRESSION AND TENSION LOADING CONDITIONS ONLY. NO SHEAR LOADING.

MASON WEST
1601 E. Miraloma Ave. Placentia, CA 92870
TEL (714) 630 - 0701, www.masonwest.com

Jiefu "Jeff" Zhang, SE
California SE No. S5270

PAGE
M1.41

HANGER ATTACHMENT TO CONCRETE SLAB AND BEAM WITH (2) MASON IND. N.Y. SAS(E) CONCRETE ANCHORS

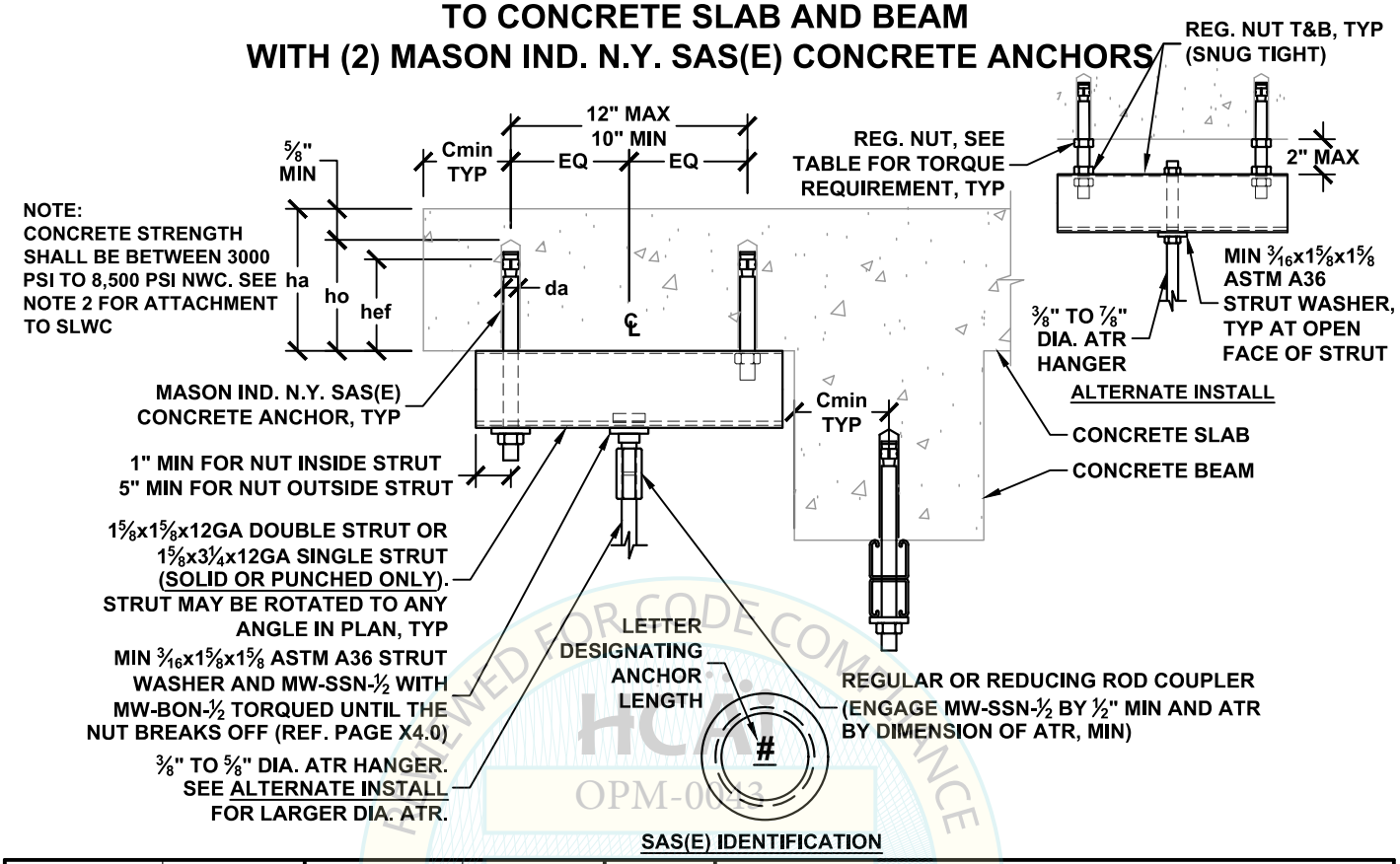

HANGER ATTACHMENT TYPE	STEEL COMPONENT ALLOWABLE VERTICAL LOAD Ta LBS	HANGER ATTACHMENT TYPE	CONCRETE ANCHOR ALLOWABLE VERTICAL LOAD Tac [1,2] LBS	ATR HANGER DIA. INCH	MASON IND. N.Y. SAS(E) CONCRETE ANCHOR (ICC ESR-3037) SPECIAL INSPECTION REQ'D						
					DIA. da INCH	MIN EFF. EMBED. hef INCH	MIN HOLE DEPTH ho INCH	MIN BASE TH. ha INCH	MIN EDGE Cmin INCH	MIN SPACING Smin INCH	TORQUE REQ'D FT-LBS
38A TO 38N	2400	38A TO 38N	2480	3/8	3/8	2 1/2	3	4 1/2	6	7 1/2	30
50A TO 50P	2620	50A TO 50N	2480	1/2							
63A TO 63P	2620	63A TO 63N	2480	5/8							
75A TO 75P	2620	75A TO 75N	2480	3/4							
88A TO 88P	2620	88A TO 88N	2480	7/8							
38A TO 38N	2400	38A TO 38P	2580	3/8	1/2	2 1/4	3	4 1/2	7	6 3/4	60
50A TO 50P	2620	50A TO 50P	2580	1/2							
63A TO 63P	2620	63A TO 63P	2580	5/8							
75A TO 75P	2620	75A TO 75P	2580	3/4							
88A TO 88P	2620	88A TO 88P	2580	7/8							

SEE DETAIL M0.00 FOR SECTION NOTES

[1] ALLOWABLE LOADS HAVE BEEN INCREASED BY A FACTOR OF 1.2 FOR LOAD COMBINATIONS INCLUDING OVERSTRENGTH, Ω_0, PER ASCE 7-10 SEC. 12.4.3.3.

[2] FOR SLWC SLAB AND BEAM, REDUCE CONCRETE ANCHOR ALLOWABLE VERTICAL LOAD BY MULTIPLYING ALLOWABLE LOAD BY A FACTOR OF 0.6.

MASON WEST
1601 E. Miraloma Ave. Placentia, CA 92870
TEL (714) 630 - 0701, www.masonwest.com

Jiefu "Jeff" Zhang, SE
California SE No. S5270

PAGE
M1.41.1

REVIEWED FOR CODE COMPLIANCE
HCAI
OPM-0043
BY: William Staehlin
DATE: 01/23/2023
CALIFORNIA BUILDING CODE

HANGER ATTACHMENT
TO CONCRETE SLAB AND BEAM
WITH (2) MASON IND. N.Y. SAS(E) CONCRETE ANCHORS

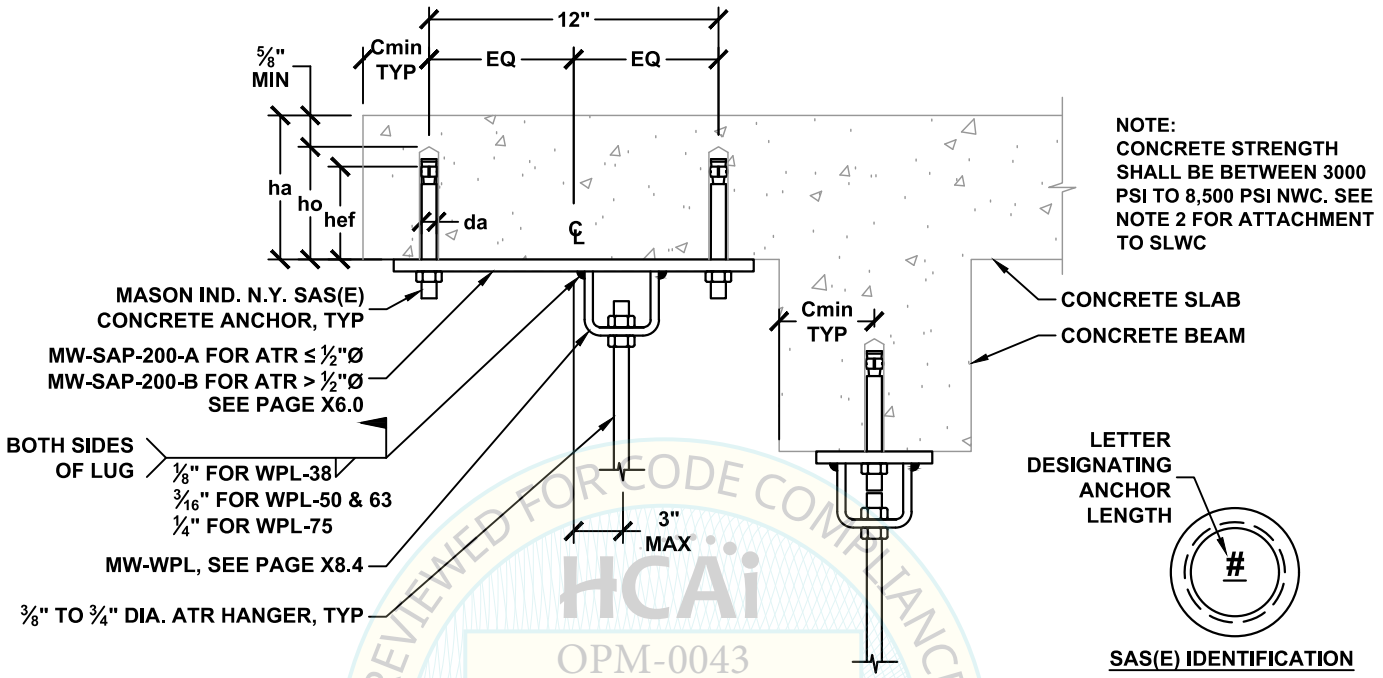

REVIEWED FOR CODE COMPLIANCE
HCAi
OPM-0043
BY: William Staehlin
DATE: 01/23/2023
CALIFORNIA BUILDING CODE 2022

HANGER ATTACHMENT TYPE	STEEL COMPONENT ALLOWABLE VERTICAL LOAD Ta LBS	HANGER ATTACHMENT TYPE	CONCRETE ACHOR ALLOWABLE VERTICAL LOAD Tac [1,2] LBS	ATR HANGER DIA. INCH	MASON IND. N.Y. SAS(E) CONCRETE ANCHOR (ICC ESR-3037) SPECIAL INSPECTION REQ'D						
					DIA. da INCH	MIN EFF. EMBED. hef INCH	MIN HOLE DEPTH ho INCH	MIN BASE TH. ha INCH	MIN EDGE Cmin INCH	MIN SPACING Smin INCH	TORQUE REQ'D FT-LBS
38A TO 38H	720	38A TO 38H	4120	⅜	⅝	4½	5⅜	8	7	13½	90
50A TO 50K	1080	50A TO 50K	4120	½							
63A TO 63M	1930	63A TO 63M	4120	⅝							
75A TO 75M	1930	75A TO 75M	4120	¾							

SEE DETAIL M0.00 FOR SECTION NOTES

[1] ALLOWABLE LOADS HAVE BEEN INCREASED BY A FACTOR OF 1.2 FOR LOAD COMBINATIONS INCLUDING OVERSTRENGTH, Ω_0, PER ASCE 7-10 SEC. 12.4.3.3.

[2] FOR SLWC SLAB AND BEAM, REDUCE CONCRETE ANCHOR ALLOWABLE VERTICAL LOAD BY MULTIPLYING ALLOWABLE LOAD BY A FACTOR OF 0.6.

MASON WEST
1601 E. Miraloma Ave. Placentia, CA 92870
TEL (714) 630 - 0701, www.masonwest.com

Jiefu "Jeff" Zhang, SE
California SE No. S5270

PAGE
M1.42

HANGER ATTACHMENT
TO CONCRETE SLAB AND BEAM
WITH (4) MASON IND. N.Y. SAS(E) CONCRETE ANCHORS

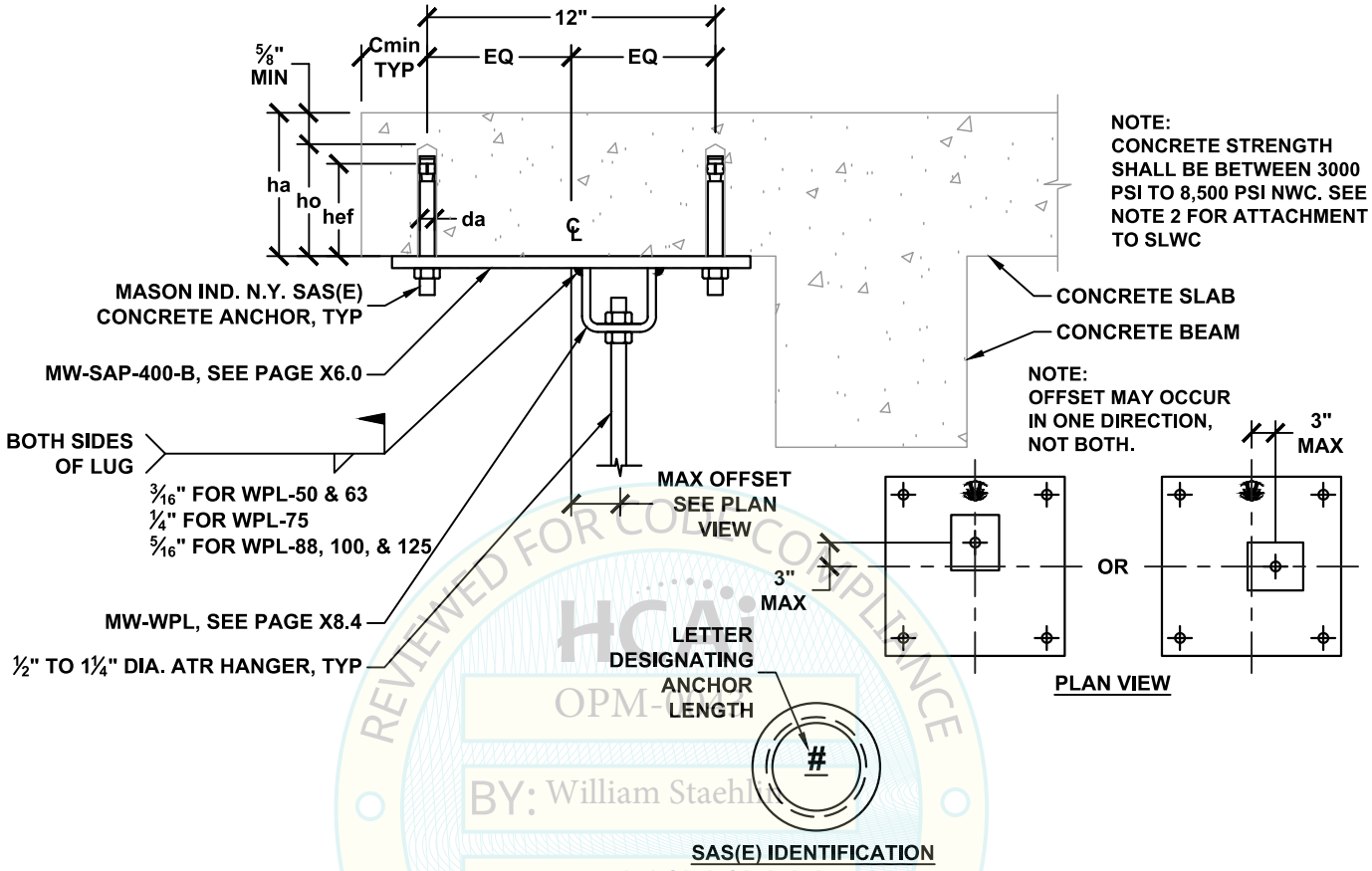

REVIEWED FOR CODE COMPLIANCE
HCAi
OPM-
BY: William Staehlin
DATE: 01/23/2023
CALIFORNIA BUILDING CODE

HANGER ATTACHMENT TYPE	STEEL COMPONENT ALLOWABLE VERTICAL LOAD Ta LBS	HANGER ATTACHMENT TYPE	CONCRETE ANCHOR ALLOWABLE VERTICAL LOAD Tac [1,2] LBS	ATR HANGER DIA. INCH	MASON IND. N.Y. SAS(E) CONCRETE ANCHOR (ICC ESR-3037) SPECIAL INSPECTION REQ'D						
					DIA. da INCH	MIN EFF. EMBED. hef INCH	MIN HOLE DEPTH ho INCH	MIN BASE TH. ha INCH	MIN EDGE Cmin INCH	MIN SPACING Smin INCH	TORQUE REQ'D FT-LBS
50A TO 50L	1320	50A TO 50S	8240	½	⅝	4½	5⅜	8	7	13½	90
63A TO 63P	2880	63A TO 63S	8240	⅝							
75A TO 75Q	3600	75A TO 75S	8240	¾							
88A TO 88Q	3600	88A TO 88S	8240	⅞							
100A TO 100Q	3600	100A TO 100S	8240	1							
125A TO 125Q	3600	125A TO 125S	8240	1¼							

SEE DETAIL M0.00 FOR SECTION NOTES

[1] ALLOWABLE LOADS HAVE BEEN INCREASED BY A FACTOR OF 1.2 FOR LOAD COMBINATIONS INCLUDING OVERSTRENGTH, Ω_0, PER ASCE 7-10 SEC. 12.4.3.3.

[2] FOR SLWC SLAB AND BEAM, REDUCE CONCRETE ANCHOR ALLOWABLE VERTICAL LOAD BY MULTIPLYING ALLOWABLE LOAD BY A FACTOR OF 0.6.

MASON WEST
1601 E. Miraloma Ave. Placentia, CA 92870
TEL (714) 630 - 0701, www.masonwest.com

Jiefu "Jeff" Zhang, SE
California SE No. S5270

PAGE
M1.43

HANGER ATTACHMENT
TO CONCRETE SLAB AND BEAM
WITH (1) DEWALT/POWERS POWER-STUD+ SD2 CONCRETE ANCHOR

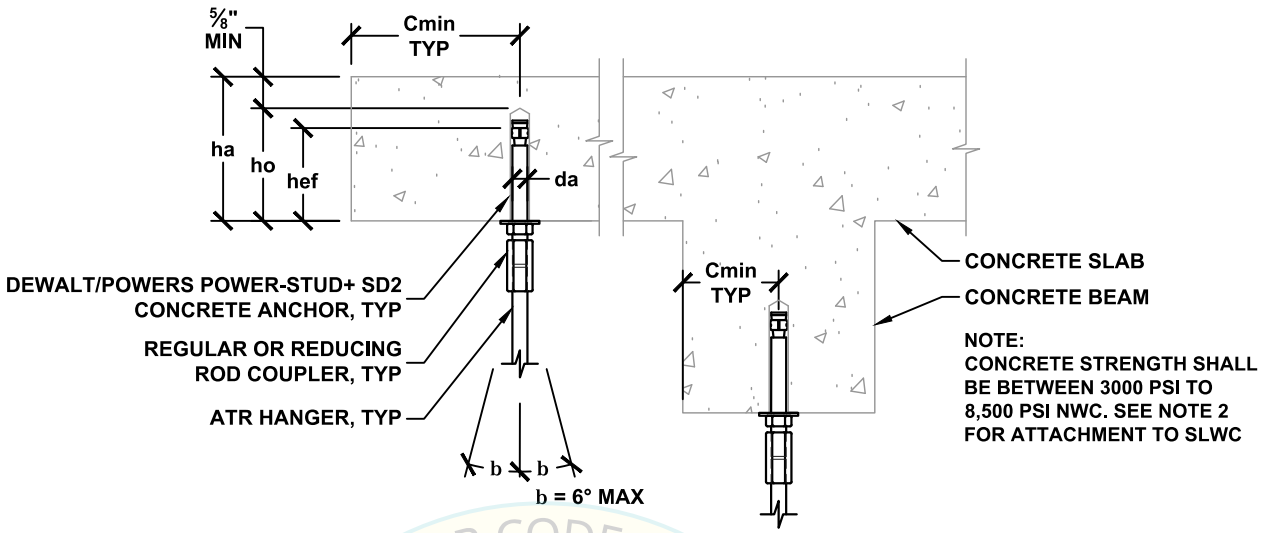

HANGER ATTACHMENT TYPE	ALLOWABLE VERTICAL LOAD Ta [1,2] LBS	MIN ATR HANGER DIA. INCH	DEWALT/POWERS POWER-STUD+ SD2 CONCRETE ANCHOR (ICC ESR-2502) SPECIAL INSPECTION REQ'D						
			DIA. da INCH	MIN EFF. EMBED. hef INCH	MIN HOLE DEPTH ho INCH	MIN BASE TH. ha INCH	MIN EDGE Cmin INCH	MIN SPACING Smin INCH	TORQUE REQ'D FT-LBS
38A TO 38J	970	⅜	⅜	2	2⅝	4	4½	6	20
38A TO 38K	1080	⅜	½	2	2¾	4½	4½	6	40
50A TO 50K	1080	½							
63A TO 63K	1080	⅝							
38A TO 38M	1960	⅜	½	3¼	4	6	6	9¾	40
50A TO 50M	1960	½							
63A TO 63M	1960	⅝							
50A TO 50N	2230	½	⅝	3¼	4¼	6	6	9¾	60
63A TO 63N	2230	⅝							
75A TO 75N	2230	¾							
50A TO 50P	3340	½	⅝	4¼	5¼	6½	12	12¾	60
63A TO 63P	3340	⅝							
75A TO 75P	3340	¾							
63A TO 63P	2770	⅝	¾	3¾	5	7	12	11¼	110
75A TO 75P	2770	¾							
88A TO 88P	2770	⅞							

SEE DETAIL M0.00 FOR SECTION NOTES

[1] ALLOWABLE LOADS HAVE BEEN INCREASED BY A FACTOR OF 1.2 FOR LOAD COMBINATIONS INCLUDING OVERSTRENGTH, Ω_0, PER ASCE 7-10 SEC. 12.4.3.3.

[2] FOR SLWC SLAB AND BEAM, REDUCE ALLOWABLE VERTICAL LOAD BY MULTIPLYING ALLOWABLE LOAD BY A FACTOR OF 0.68.

REVIEWED FOR CODE COMPLIANCE
HCAI
OPM-0043
BY: William Staehlin
DATE: 01/23/2023
CALIFORNIA BUILDING CODE, 2022

MASON WEST
1601 E. Miraloma Ave. Placentia, CA 92870
TEL (714) 630 - 0701, www.masonwest.com

Jiefu "Jeff" Zhang, SE
California SE No. S5270

PAGE
M1.60

HANGER ATTACHMENT
TO CONCRETE SLAB AND BEAM
WITH (2) DEWALT/POWERS POWER-STUD+ SD2 CONCRETE ANCHORS

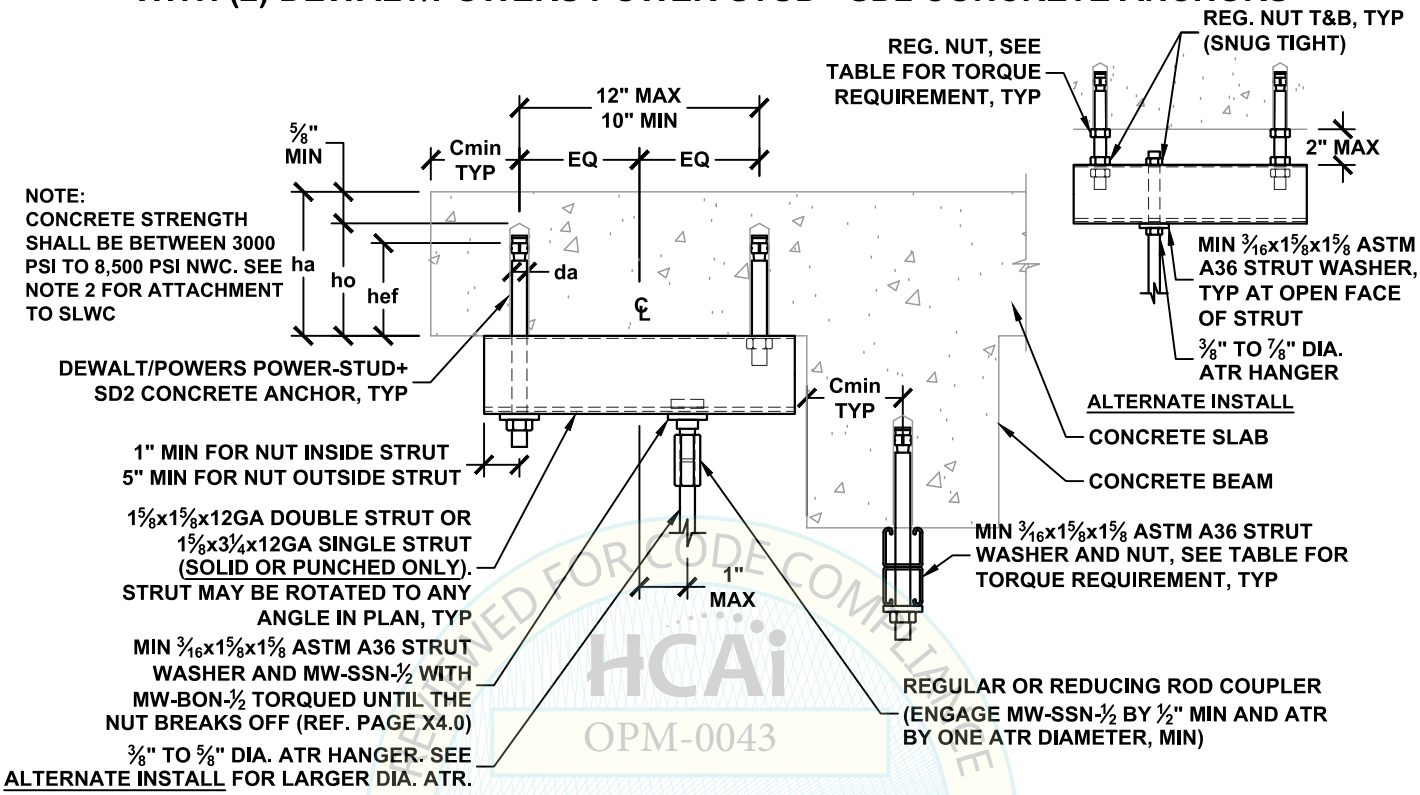

HANGER ATTACHMENT TYPE	STEEL COMPONENT ALLOWABLE VERTICAL LOAD Ta LBS	HANGER ATTACHMENT TYPE	CONCRETE ANCHOR ALLOWABLE VERTICAL LOAD Tac [1,2] LBS	ATR HANGER DIA. INCH	DEWALT/POWERS POWER-STUD+ SD2 CONCRETE ANCHOR (ICC ESR-2502) SPECIAL INSPECTION REQ'D						
					DIA. da INCH	MIN EFF. EMBED. hef INCH	MIN HOLE DEPTH ho INCH	MIN BASE TH. ha INCH	MIN EDGE Cmin INCH	MIN SPACING Smin INCH	TORQUE REQ'D FT-LBS
38A TO 38N	2400	38A TO 38M	1620	3/8	3/8	2	2 5/8	4	4 1/2	6	20
50A TO 50P	2620	50A TO 50M	1620	1/2							
63A TO 63P	2620	63A TO 63M	1620	5/8							
75A TO 75P	2620	75A TO 75M	1620	3/4							
88A TO 88P	2620	88A TO 88M	1620	7/8							
38A TO 38N	2400	38A TO 38P	3270	3/8	1/2	3 1/4	4	6	6	9 3/4	40
50A TO 50P	2620	50A TO 50P	3270	1/2							
63A TO 63P	2620	63A TO 63P	3270	5/8							
75A TO 75P	2620	75A TO 75P	3270	3/4							
88A TO 88P	2620	88A TO 88P	3270	7/8							

SEE DETAIL M0.00 FOR SECTION NOTES

[1] ALLOWABLE LOADS HAVE BEEN INCREASED BY A FACTOR OF 1.2 FOR LOAD COMBINATIONS INCLUDING OVERSTRENGTH, Ω_0, PER ASCE 7-10 SEC. 12.4.3.3.

[2] FOR SLWC SLAB AND BEAM, REDUCE CONCRETE ANCHOR ALLOWABLE VERTICAL LOAD BY MULTIPLYING ALLOWABLE LOAD BY A FACTOR OF 0.68.

[3] ATR HANGER PERMITTED FOR COMPRESSION AND TENSION LOADING CONDITIONS ONLY. NO SHEAR LOADING.

MASON WEST
1601 E. Miraloma Ave. Placentia, CA 92870
TEL (714) 630 - 0701, www.masonwest.com

Jiefu "Jeff" Zhang, SE
California SE No. S5270

PAGE
M1.61

REVIEWED FOR CODE COMPLIANCE
HCAi
OPM-0043
BY: William Staehlin
01/23/2023
CALIFORNIA BUILDING CODE

HANGER ATTACHMENT
TO CONCRETE SLAB AND BEAM
WITH (2) DEWALT/POWERS POWER-STUD+ SD2 CONCRETE ANCHORS

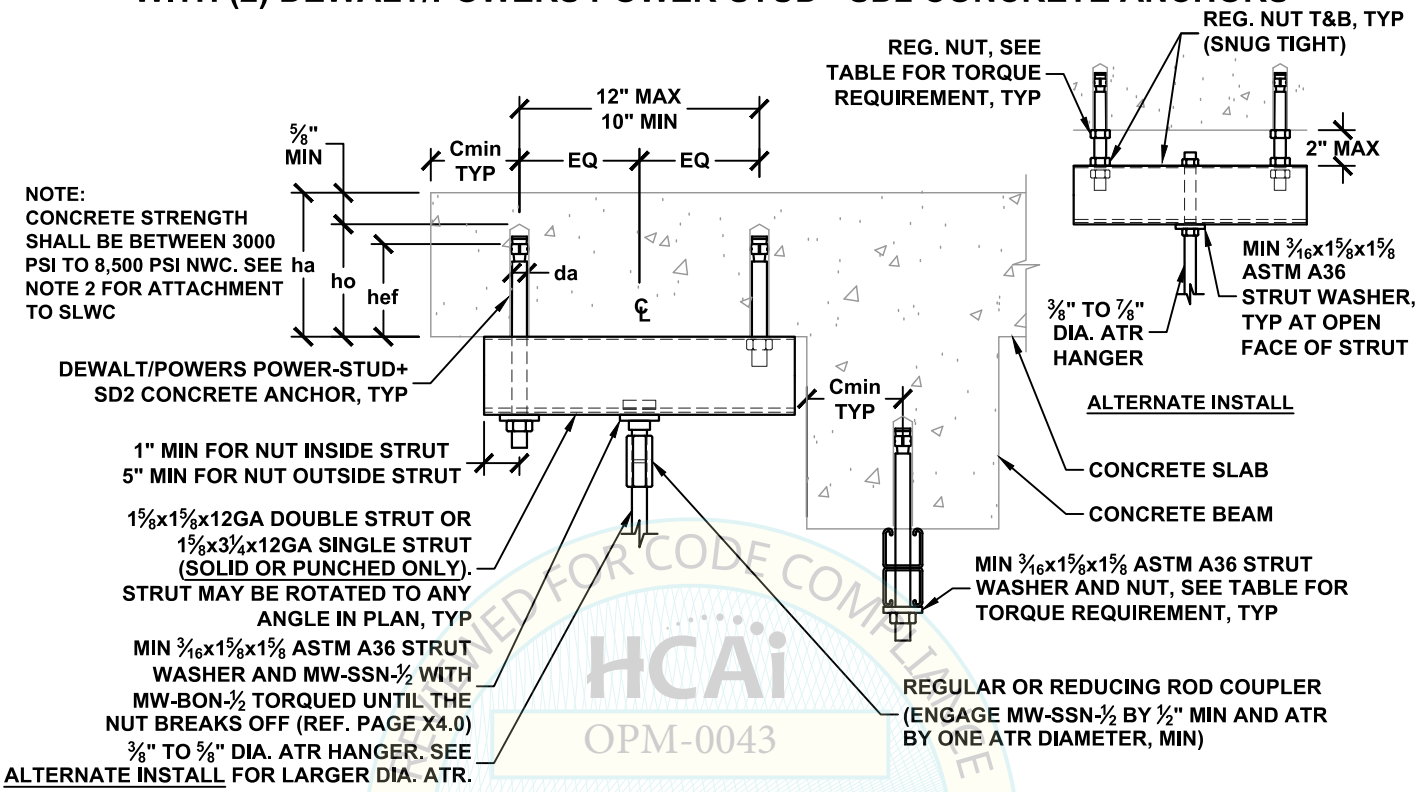

HANGER ATTACHMENT TYPE	STEEL COMPONENT ALLOWABLE VERTICAL LOAD Ta LBS	HANGER ATTACHMENT TYPE	CONCRETE ANCHOR ALLOWABLE VERTICAL LOAD Tac [1,2] LBS	ATR HANGER DIA. INCH	DEWALT/POWERS POWER-STUD+ SD2 CONCRETE ANCHOR (ICC ESR-2502) SPECIAL INSPECTION REQ'D						
					DIA. da INCH	MIN EFF. EMBED. hef INCH	MIN HOLE DEPTH ho INCH	MIN BASE TH. ha INCH	MIN EDGE Cmin INCH	MIN SPACING Smin INCH	TORQUE REQ'D FT-LBS
38A TO 38N	2400	38A TO 38M	1940	3/8	3/8	2	2 5/8	4	4 1/2	6	20
50A TO 50P	2620	50A TO 50M	1940	1/2							
63A TO 63P	2620	63A TO 63M	1940	5/8							
75A TO 75P	2620	75A TO 75M	1940	3/4							
88A TO 88P	2620	88A TO 88M	1940	7/8							
38A TO 38N	2400	38A TO 38Q	3920	3/8	1/2	3 1/4	4	6	6	9 3/4	40
50A TO 50P	2620	50A TO 50Q	3920	1/2							
63A TO 63P	2620	63A TO 63Q	3920	5/8							
75A TO 75P	2620	75A TO 75Q	3920	3/4							
88A TO 88P	2620	88A TO 88Q	3920	7/8							

SEE DETAIL M0.00 FOR SECTION NOTES

[1] ALLOWABLE LOADS HAVE BEEN INCREASED BY A FACTOR OF 1.2 FOR LOAD COMBINATIONS INCLUDING OVERSTRENGTH, Ω_0, PER ASCE 7-10 SEC. 12.4.3.3.

[2] FOR SLWC SLAB AND BEAM, REDUCE CONCRETE ANCHOR ALLOWABLE VERTICAL LOAD BY MULTIPLYING ALLOWABLE LOAD BY A FACTOR OF 0.68.

MASON WEST
1601 E. Miraloma Ave. Placentia, CA 92870
TEL (714) 630 - 0701, www.masonwest.com

Jiefu "Jeff" Zhang, SE
California SE No. S5270

PAGE
M1.61.1

REVIEWED FOR CODE COMPLIANCE
HCAi
OPM-0043
BY: William Staehlin
01/23/2023
CALIFORNIA BUILDING CODE

HANGER ATTACHMENT
TO CONCRETE SLAB AND BEAM
WITH (2) DEWALT/POWERS POWER-STUD+ SD2 CONCRETE ANCHORS

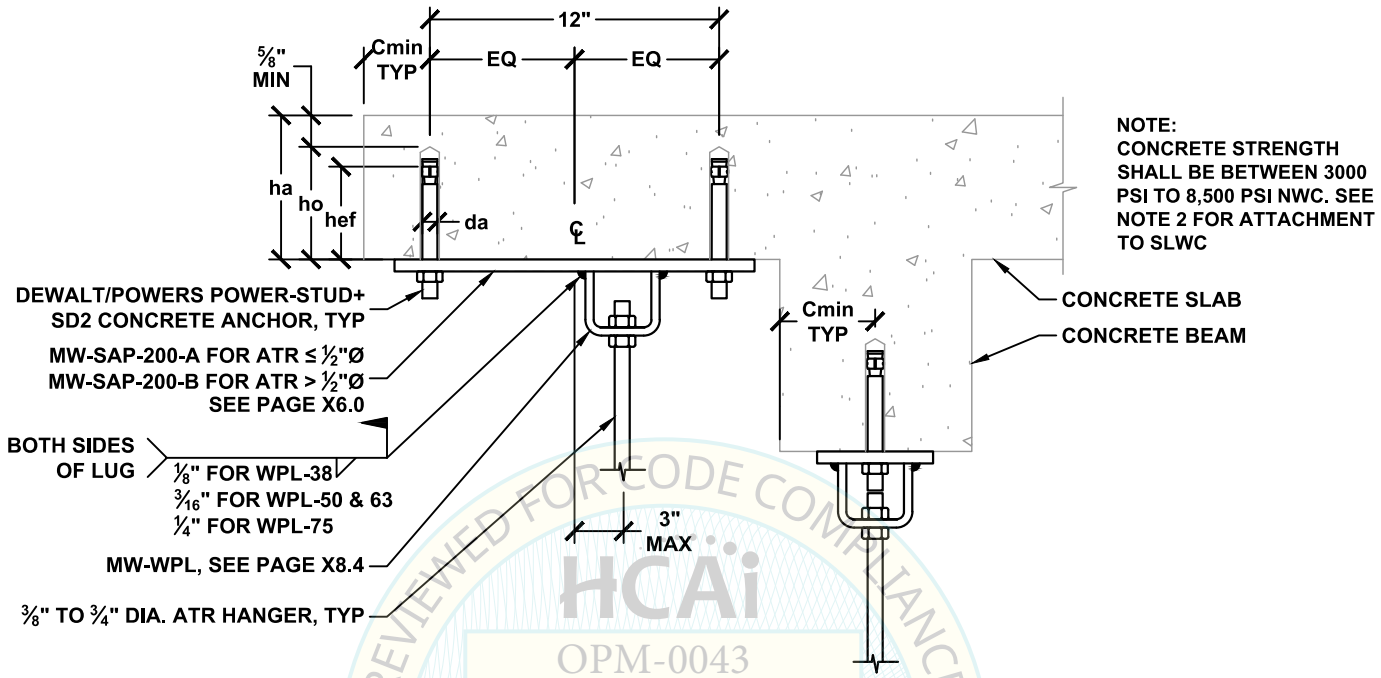

HANGER ATTACHMENT TYPE	STEEL COMPONENT ALLOWABLE VERTICAL LOAD Ta LBS	HANGER ATTACHMENT TYPE	CONCRETE ANCHOR ALLOWABLE VERTICAL LOAD Tac [1,2] LBS	ATR HANGER DIA. INCH	DEWALT/POWERS POWER-STUD+ SD2 CONCRETE ANCHOR (ICC ESR-2502) SPECIAL INSPECTION REQ'D						
					DIA. da INCH	MIN EFF. EMBED. hef INCH	MIN HOLE DEPTH ho INCH	MIN BASE TH. ha INCH	MIN EDGE Cmin INCH	MIN SPACING Smin INCH	TORQUE REQ'D FT-LBS
38A TO 38H	720	38A TO 38P	2970	3/8	5/8	3¼	4¼	6	6	9¾	60
50A TO 50K	1080	50A TO 50P	2970	½							
63A TO 63M	1930	63A TO 63P	2970	5/8							
75A TO 75M	1930	75A TO 75P	2970	¾							
38A TO 38H	720	38A TO 38Q	4450	3/8	5/8	4¼	5¼	6½	12	12¾	60
50A TO 50K	1080	50A TO 50Q	4450	½							
63A TO 63M	1930	63A TO 63Q	4450	5/8							
75A TO 75M	1930	75A TO 75Q	4450	¾							

SEE DETAIL M0.00 FOR SECTION NOTES

[1] ALLOWABLE LOADS HAVE BEEN INCREASED BY A FACTOR OF 1.2 FOR LOAD COMBINATIONS INCLUDING OVERSTRENGTH, Ω_0, PER ASCE 7-10 SEC. 12.4.3.3.

[2] FOR SLWC SLAB AND BEAM, REDUCE CONCRETE ANCHOR ALLOWABLE VERTICAL LOAD BY MULTIPLYING ALLOWABLE LOAD BY A FACTOR OF 0.68.

REVIEWED FOR CODE COMPLIANCE
HCAi
OPM-0043
BY: William Staehlin
DATE: 01/23/2023
CALIFORNIA BUILDING CODE, 2019

MASON WEST
1601 E. Miraloma Ave. Placentia, CA 92870
TEL (714) 630 - 0701, www.masonwest.com

Jiefu "Jeff" Zhang, SE
California SE No. S5270

PAGE
M1.62

HANGER ATTACHMENT
TO CONCRETE SLAB AND BEAM
WITH (4) DEWALT/POWERS POWER-STUD+ SD2 CONCRETE ANCHORS

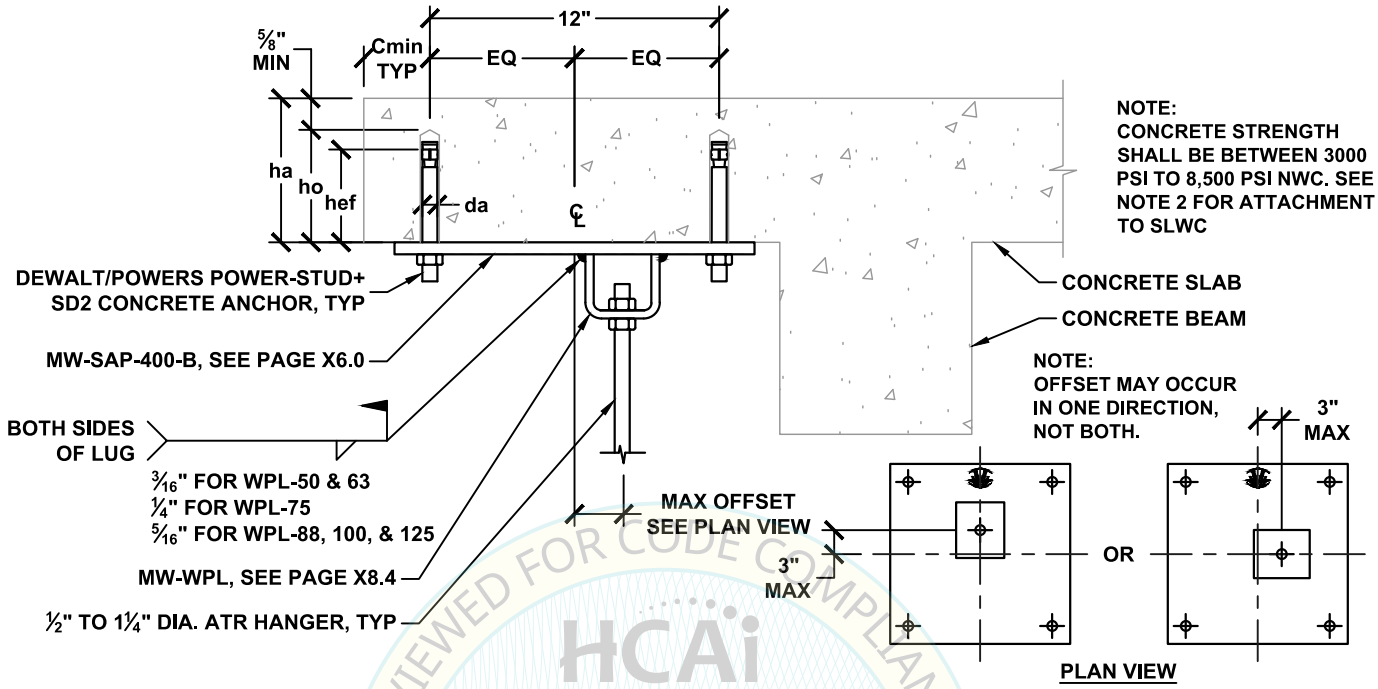

HANGER ATTACHMENT TYPE	STEEL COMPONENT ALLOWABLE VERTICAL LOAD Ta LBS	HANGER ATTACHMENT TYPE	CONCRETE ANCHOR ALLOWABLE VERTICAL LOAD Tac [1,2] LBS	ATR HANGER DIA. INCH	DEWALT/POWERS POWER-STUD+ SD2 CONCRETE ANCHOR (ICC ESR-2502) SPECIAL INSPECTION REQ'D						
					DIA. da INCH	MIN EFF. EMBED. hef INCH	MIN HOLE DEPTH ho INCH	MIN BASE TH. ha INCH	MIN EDGE Cmin INCH	MIN SPACING Smin INCH	TORQUE REQ'D FT-LBS
50A TO 50L	1320	50A TO 50R	5950	1/2	5/8	3 1/4	4 1/4	6	6	9 3/4	60
63A TO 63P	2880	63A TO 63R	5950	5/8							
75A TO 75Q	3600	75A TO 75R	5950	3/4							
88A TO 88Q	3600	88A TO 88R	5950	7/8							
100A TO 100Q	3600	100A TO 100R	5950	1							
125A TO 125Q	3600	125A TO 125R	5950	1 1/4							
50A TO 50L	1320	50A TO 50S	8910	1/2	5/8	4 1/4	5 1/4	6 1/2	12	12 3/4	60
63A TO 63P	2880	63A TO 63S	8910	5/8							
75A TO 75Q	3600	75A TO 75S	8910	3/4							
88A TO 88Q	3600	88A TO 88S	8910	7/8							
100A TO 100Q	3600	100A TO 100S	8910	1							
125A TO 125Q	3600	125A TO 125S	8910	1 1/4							

SEE DETAIL M0.00 FOR SECTION NOTES

[1] ALLOWABLE LOADS HAVE BEEN INCREASED BY A FACTOR OF 1.2 FOR LOAD COMBINATIONS INCLUDING OVERSTRENGTH, Ω_0, PER ASCE 7-10 SEC. 12.4.3.3.

[2] FOR SLWC SLAB AND BEAM, REDUCE CONCRETE ANCHOR ALLOWABLE VERTICAL LOAD BY MULTIPLYING ALLOWABLE LOAD BY A FACTOR OF 0.68.

MASON WEST
1601 E. Miraloma Ave. Placentia, CA 92870
TEL (714) 630 - 0701, www.masonwest.com

Jiefu "Jeff" Zhang, SE
California SE No. S5270

PAGE
M1.63

HCAi OPM-0043 REVIEWED FOR CODE COMPLIANCE William Staehlin DATE: 01/23/2023 CBC 2019 CALIFORNIA BUILDING CODE, 2019

HANGER ATTACHMENT
TO CONCRETE SLAB AND BEAM
WITH (1) CONCRETE SCREW ANCHOR

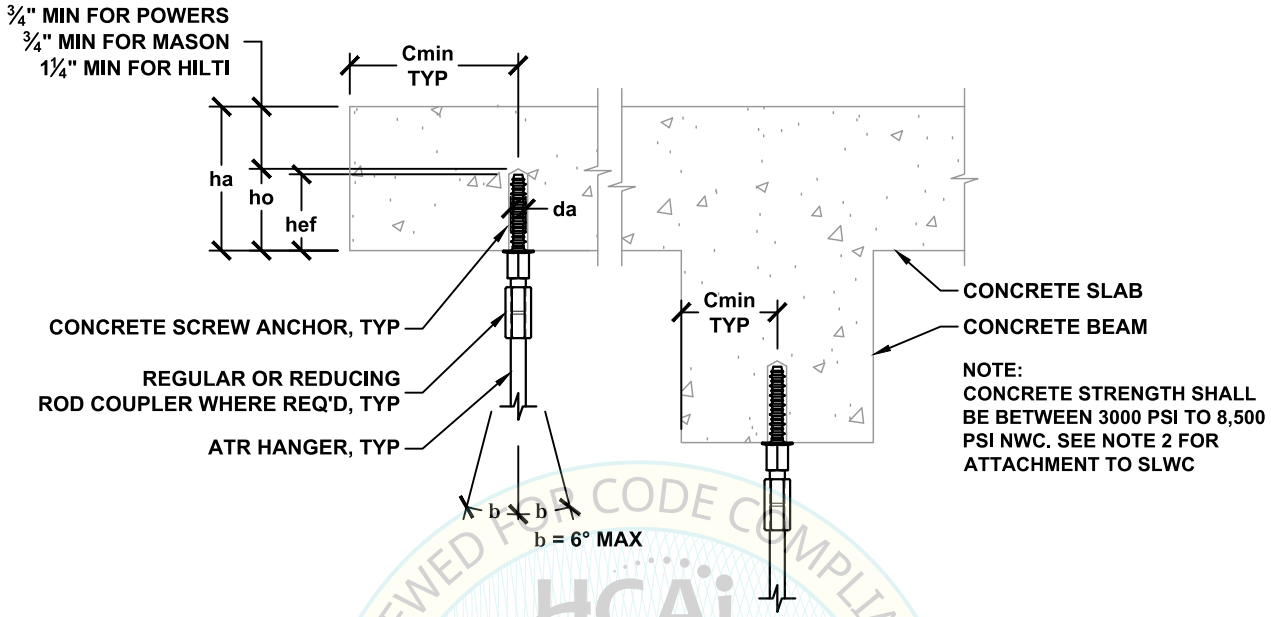

REVIEWED FOR CODE COMPLIANCE
CALIFORNIA BUILDING CODE, 2022
HCAi
OPM-0043
BY: William Staehlin
DATE: 01/23/2023

HANGER ATTACHMENT TYPE	ALLOWABLE VERTICAL LOAD Ta [1,2] LBS	ATR HANGER DIA. INCH	DEWALT/POWERS HANGERMATE+ SCREW ANCHOR (ICC ESR-3889) SPECIAL INSPECTION REQ'D						
			DIA. da INCH	MIN EFF. EMBED. hef INCH	MIN HOLE DEPTH ho INCH	MIN BASE TH. ha INCH	MIN EDGE Cmin INCH	MIN SPACING Smin INCH	MAX INSTALL. TORQUE FT-LBS
38A TO 38F	520	⅜	¼ W/ ⅜"Ø HEAD	2	2⅞	4	3	6	25
50A TO 50F	520	½							

SEE DETAIL M0.00 FOR SECTION NOTES

[1] ALLOWABLE LOADS HAVE BEEN INCREASED BY A FACTOR OF 1.2 FOR LOAD COMBINATIONS INCLUDING OVERSTRENGTH, Ω_0, PER ASCE 7-10 SEC. 12.4.3.3.

[2] FOR SLWC SLAB AND BEAM, REDUCE ALLOWABLE VERTICAL LOAD BY MULTIPLYING ALLOWABLE LOAD BY A FACTOR OF 0.68.

[3] SEE PAGE M1.70.1 FOR ADDITIONAL ALLOWABLE LOAD TABLES.

MASON WEST
1601 E. Miraloma Ave. Placentia, CA 92870
TEL (714) 630 - 0701, www.masonwest.com

Jiefu "Jeff" Zhang, SE
California SE No. S5270

PAGE
M1.70

HANGER ATTACHMENT
TO CONCRETE SLAB AND BEAM
WITH (1) CONCRETE SCREW ANCHOR

HANGER ATTACHMENT TYPE	ALLOWABLE VERTICAL LOAD Ta [1,2] LBS	ATR HANGER DIA. INCH	MASON IND. N.Y. SAST CONCRETE SCREW ANCHOR (ICC ESR-2713) SPECIAL INSPECTION REQ'D						
			DIA. da INCH	MIN EFF. EMBED. hef INCH	MIN HOLE DEPTH ho INCH	MIN BASE TH. ha INCH	MIN EDGE Cmin INCH	MIN SPACING Smin INCH	MAX INSTALL. TORQUE FT-LBS
38A TO 38F	550	3/8	3/8 W/ 3/8"Ø HEAD	1 7/8	2 3/4	4	2 13/16	5 5/8	50
50A TO 50F	550	1/2							
38A TO 38F	550	3/8	3/8 W/ 1/2"Ø HEAD	1 7/8	3	4 1/4	2 13/16	5 5/8	50
50A TO 50F	550	1/2							
63A TO 63F	550	5/8							

HANGER ATTACHMENT TYPE	ALLOWABLE VERTICAL LOAD Ta [1,2] LBS	ATR HANGER DIA. INCH	HILTI KH-EZ-I CONCRETE SCREW ANCHOR (ICC ESR-3027) SPECIAL INSPECTION REQ'D						
			DIA. da INCH	MIN EFF. EMBED. hef INCH	MIN HOLE DEPTH ho INCH	MIN BASE TH. ha INCH	MIN EDGE Cmin INCH	MIN SPACING Smin INCH	MAX INSTALL. TORQUE FT-LBS
38A TO 38F	520	3/8	1/4 W/ 3/8"Ø HEAD	2	2 7/8	4 1/8	3	6	18
50A TO 50F	520	1/2							

SEE DETAIL M0.00 FOR SECTION NOTES

[1] ALLOWABLE LOADS HAVE BEEN INCREASED BY A FACTOR OF 1.2 FOR LOAD COMBINATIONS INCLUDING OVERSTRENGTH, Ω_0, PER ASCE 7-10 SEC. 12.4.3.3.

[2] FOR SLWC SLAB AND BEAM, REDUCE ALLOWABLE VERTICAL LOAD BY MULTIPLYING ALLOWABLE LOAD BY A FACTOR OF 0.68.

REVIEWED FOR CODE COMPLIANCE
HCAi
OPM-0043
BY: William Staehlin
DATE: 01/23/2023
CALIFORNIA BUILDING CODE 2022

MASON WEST
1601 E. Miraloma Ave. Placentia, CA 92870
TEL (714) 630 - 0701, www.masonwest.com

Jiefu "Jeff" Zhang, SE
California SE No. S5270

HANGER ATTACHMENT
TO CONCRETE SLAB AND BEAM
WITH (2) CONCRETE SCREW ANCHORS

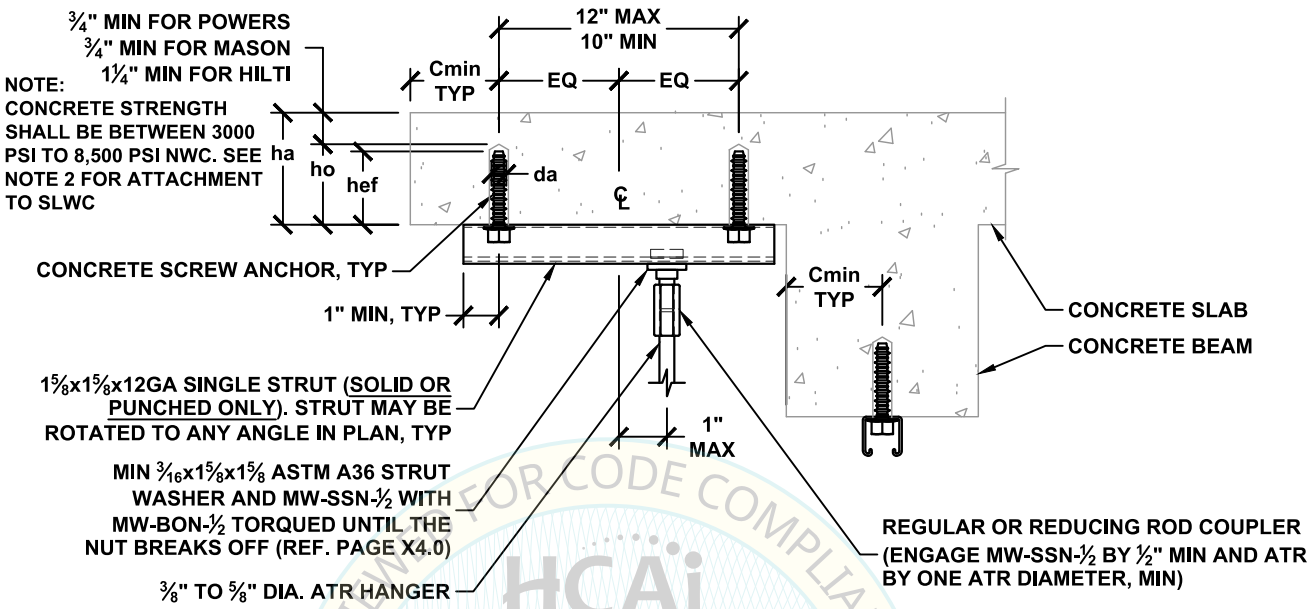

REVIEWED FOR CODE COMPLIANCE
HCAi
OPM-0043
BY: William Staehlin
01/23/2023
CALIFORNIA BUILDING CODE 2022

HANGER ATTACHMENT TYPE	STEEL COMPONENT ALLOWABLE VERTICAL LOAD Ta LBS	HANGER ATTACHMENT TYPE	CONCRETE ANCHOR ALLOWABLE VERTICAL LOAD Tac [1,2] LBS	ATR HANGER DIA. INCH	DEWALT/POWERS SCREW-BOLT+ CONCRETE SCREW ANCHOR (ICC ESR-3889) SPECIAL INSPECTION REQ'D						
					DIA. da INCH	MIN EFF. EMBED. hef INCH	MIN HOLE DEPTH ho INCH	MIN BASE TH. ha INCH	MIN EDGE Cmin INCH	MIN SPACING Smin INCH	MAX INSTALL. TORQUE FT-LBS
38A TO 38L	1380	38A TO 38N	2070	⅜	⅜	2½	3⅝	5	3¾	7½	40
50A TO 50L	1380	50A TO 50N	2070	½							
63A TO 63L	1380	63A TO 63N	2070	⅝							
38A TO 38L	1380	38A TO 38M	1880	⅜	½	2¼	3⅜	5¼	3⅜	6¾	45
50A TO 50L	1380	50A TO 50M	1880	½							
63A TO 63L	1380	63A TO 63M	1880	⅝							
38A TO 38L	1380	38A TO 38Q	3520	⅜	½	3¼	4⅝	6¾	4⅞	9¾	60
50A TO 50L	1380	50A TO 50Q	3520	½							
63A TO 63L	1380	63A TO 63Q	3520	⅝							

SEE DETAIL M0.00 FOR SECTION NOTES

[1] ALLOWABLE LOADS HAVE BEEN INCREASED BY A FACTOR OF 1.2 FOR LOAD COMBINATIONS INCLUDING OVERSTRENGTH, Ω_0, PER ASCE 7-10 SEC. 12.4.3.3.

[2] FOR SLWC SLAB AND BEAM, REDUCE CONCRETE ANCHOR ALLOWABLE VERTICAL LOAD BY MULTIPLYING ALLOWABLE LOAD BY A FACTOR OF 0.68.

[3] SEE PAGE M1.71.1 FOR ADDITIONAL ALLOWABLE LOAD TABLES.

MASON WEST
1601 E. Miraloma Ave. Placentia, CA 92870
TEL (714) 630 - 0701, www.masonwest.com

Jiefu "Jeff" Zhang, SE
California SE No. S5270

PAGE
M1.71

HANGER ATTACHMENT
TO CONCRETE SLAB AND BEAM
WITH (2) CONCRETE SCREW ANCHORS

HANGER ATTACHMENT TYPE	STEEL COMPONENT ALLOWABLE VERTICAL LOAD Ta LBS	HANGER ATTACHMENT TYPE	CONCRETE ANCHOR ALLOWABLE VERTICAL LOAD Tac [1,2] LBS	ATR HANGER DIA. INCH	MASON IND. N.Y. SAST CONCRETE SCREW ANCHOR (ICC ESR-2713) SPECIAL INSPECTION REQ'D						
					DIA. da INCH	MIN EFF. EMBED. hef INCH	MIN HOLE DEPTH ho INCH	MIN BASE TH. ha INCH	MIN EDGE Cmin INCH	MIN SPACING Smin INCH	MAX INSTALL. TORQUE FT-LBS
38A TO 38L	1380	38A TO 38J	920	3/8	3/8	1 7/8	2 3/4	4	2 13/16	5 5/8	50
50A TO 50L	1380	50A TO 50J	920	1/2							
63A TO 63L	1380	63A TO 63J	920	5/8							
38A TO 38L	1380	38A TO 38N	2280	3/8	1/2	2 3/8	3 3/4	5	3 9/16	7 1/8	65
50A TO 50L	1380	50A TO 50N	2280	1/2							
63A TO 63L	1380	63A TO 63N	2280	5/8							
38A TO 38L	1380	38A TO 38P	3280	3/8	1/2	3	4 1/2	6 1/4	4 1/2	9	65
50A TO 50L	1380	50A TO 50P	3280	1/2							
63A TO 63L	1380	63A TO 63P	3280	5/8							

HANGER ATTACHMENT TYPE	STEEL COMPONENT ALLOWABLE VERTICAL LOAD Ta LBS	HANGER ATTACHMENT TYPE	CONCRETE ANCHOR ALLOWABLE VERTICAL LOAD Tac [1,2] LBS	ATR HANGER DIA. INCH	HILTI KH-EZ CONCRETE SCREW ANCHOR (ICC ESR-3027) SPECIAL INSPECTION REQ'D						
					DIA. da INCH	MIN EFF. EMBED. hef INCH	MIN HOLE DEPTH ho INCH	MIN BASE TH. ha INCH	MIN EDGE Cmin INCH	MIN SPACING Smin INCH	MAX INSTALL. TORQUE FT-LBS
38A TO 38L	1380	38A TO 38F	550	3/8	3/8	1 1/8	1 7/8	3 1/4	1 11/16	3 3/8	19
50A TO 50L	1380	50A TO 50F	550	1/2							
63A TO 63L	1380	63A TO 63F	550	5/8							
38A TO 38L	1380	38A TO 38M	1620	3/8	3/8	1 7/8	2 3/4	4	2 13/16	5 5/8	40
50A TO 50L	1380	50A TO 50M	1620	1/2							
63A TO 63L	1380	63A TO 63M	1620	5/8							
38A TO 38L	1380	38A TO 38N	2020	3/8	1/2	2 1/4	3 3/8	4 3/4	3 3/8	6 3/4	45
50A TO 50L	1380	50A TO 50N	2020	1/2							
63A TO 63L	1380	63A TO 63N	2020	5/8							

SEE DETAIL M0.00 FOR SECTION NOTES

[1] ALLOWABLE LOADS HAVE BEEN INCREASED BY A FACTOR OF 1.2 FOR LOAD COMBINATIONS INCLUDING OVERSTRENGTH, Ω_0, PER ASCE 7-10 SEC. 12.4.3.3.

[2] FOR SLWC SLAB AND BEAM, REDUCE CONCRETE ANCHOR ALLOWABLE VERTICAL LOAD BY MULTIPLYING ALLOWABLE LOAD BY A FACTOR OF 0.68.

REVIEWED FOR CODE COMPLIANCE
HCAI
OPM-0043
BY: William Staehlin
01/23/2023
CALIFORNIA BUILDING CODE

MASON WEST
1601 E. Miraloma Ave. Placentia, CA 92870
TEL (714) 630 - 0701, www.masonwest.com

Jiefu "Jeff" Zhang, SE
California SE No. S5270

HANGER ATTACHMENT
TO CONCRETE SLAB AND BEAM
WITH (2) CONCRETE SCREW ANCHORS

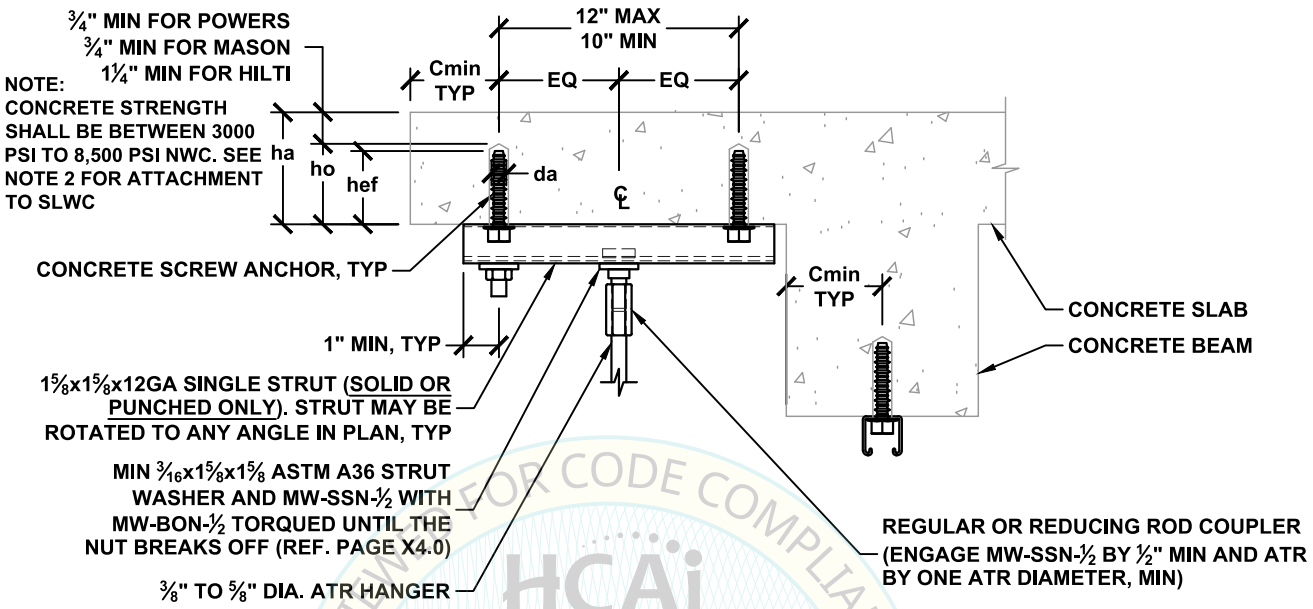

REVIEWED FOR CODE COMPLIANCE
HCAi
OPM-0043
BY: William Staehlin
01/23/2023
CALIFORNIA BUILDING CODE 2022

HANGER ATTACHMENT TYPE	STEEL COMPONENT ALLOWABLE VERTICAL LOAD Ta LBS	HANGER ATTACHMENT TYPE	CONCRETE ANCHOR ALLOWABLE VERTICAL LOAD Tac [1,2] LBS	ATR HANGER DIA. INCH	DEWALT/POWERS SCREW-BOLT+ CONCRETE SCREW ANCHOR (ICC ESR-3889) SPECIAL INSPECTION REQ'D					
					DIA. da INCH	MIN EFF. EMBED. hef INCH	MIN HOLE DEPTH ho INCH	MIN BASE TH. ha INCH	MIN EDGE Cmin INCH	MIN SPACING Smin INCH	MAX INSTALL. TORQUE FT-LBS
38A TO 38L	1380	38A TO 38N	2480	⅜	⅜	2½	3⅝	5	3¾	7½	40
50A TO 50L	1380	50A TO 50N	2480	½							
63A TO 63L	1380	63A TO 63N	2480	⅝							
38A TO 38L	1380	38A TO 38N	2260	⅜	½	2¼	3⅜	5¼	3⅜	6¾	45
50A TO 50L	1380	50A TO 50N	2260	½							
63A TO 63L	1380	63A TO 63N	2260	⅝							
38A TO 38L	1380	38A TO 38Q	4220	⅜	½	3¼	4⅝	6¾	4⅞	9¾	60
50A TO 50L	1380	50A TO 50Q	4220	½							
63A TO 63L	1380	63A TO 63Q	4220	⅝							

SEE DETAIL M0.00 FOR SECTION NOTES

[1] ALLOWABLE LOADS HAVE BEEN INCREASED BY A FACTOR OF 1.2 FOR LOAD COMBINATIONS INCLUDING OVERSTRENGTH, Ω_0, PER ASCE 7-10 SEC. 12.4.3.3.

[2] FOR SLWC SLAB AND BEAM, REDUCE CONCRETE ANCHOR ALLOWABLE VERTICAL LOAD BY MULTIPLYING ALLOWABLE LOAD BY A FACTOR OF 0.68.

[3] SEE PAGE M1.71.3 FOR ADDITIONAL ALLOWABLE LOAD TABLES.

MASON WEST
1601 E. Miraloma Ave. Placentia, CA 92870
TEL (714) 630 - 0701, www.masonwest.com

Jiefu "Jeff" Zhang, SE
California SE No. S5270

HANGER ATTACHMENT
TO CONCRETE SLAB AND BEAM
WITH (2) CONCRETE SCREW ANCHORS

HANGER ATTACHMENT TYPE	STEEL COMPONENT ALLOWABLE VERTICAL LOAD Ta LBS	HANGER ATTACHMENT TYPE	CONCRETE ANCHOR ALLOWABLE VERTICAL LOAD Tac [1,2] LBS	ATR HANGER DIA. INCH	MASON IND. N.Y. SAST CONCRETE SCREW ANCHOR (ICC ESR-2713) SPECIAL INSPECTION REQ'D						
					DIA. da INCH	MIN EFF. EMBED. hef INCH	MIN HOLE DEPTH ho INCH	MIN BASE TH. ha INCH	MIN EDGE Cmin INCH	MIN SPACING Smin INCH	MAX INSTALL. TORQUE FT-LBS
38A TO 38L	1380	38A TO 38K	1100	3/8	3/8	1 7/8	2 3/4	4	2 13/16	5 5/8	50
50A TO 50L	1380	50A TO 50K	1100	1/2							
63A TO 63L	1380	63A TO 63K	1100	5/8							
38A TO 38L	1380	38A TO 38P	2740	3/8	1/2	2 3/8	3 3/4	5	3 9/16	7 1/8	65
50A TO 50L	1380	50A TO 50P	2740	1/2							
63A TO 63L	1380	63A TO 63P	2740	5/8							
38A TO 38L	1380	38A TO 38Q	3940	3/8	1/2	3	4 1/2	6 1/4	4 1/2	9	65
50A TO 50L	1380	50A TO 50Q	3940	1/2							
63A TO 63L	1380	63A TO 63Q	3940	5/8							

HANGER ATTACHMENT TYPE	STEEL COMPONENT ALLOWABLE VERTICAL LOAD Ta LBS	HANGER ATTACHMENT TYPE	CONCRETE ANCHOR ALLOWABLE VERTICAL LOAD Tac [1,2] LBS	ATR HANGER DIA. INCH	HILTI KH-EZ CONCRETE SCREW ANCHOR (ICC ESR-3027) SPECIAL INSPECTION REQ'D						
					DIA. da INCH	MIN EFF. EMBED. hef INCH	MIN HOLE DEPTH ho INCH	MIN BASE TH. ha INCH	MIN EDGE Cmin INCH	MIN SPACING Smin INCH	MAX INSTALL. TORQUE FT-LBS
38A TO 38L	1380	38A TO 38G	660	3/8	3/8	1 1/8	1 7/8	3 1/4	1 11/16	3 3/8	19
50A TO 50L	1380	50A TO 50G	660	1/2							
63A TO 63L	1380	63A TO 63G	660	5/8							
38A TO 38L	1380	38A TO 38M	1940	3/8	3/8	1 7/8	2 3/4	4	2 13/16	5 5/8	40
50A TO 50L	1380	50A TO 50M	1940	1/2							
63A TO 63L	1380	63A TO 63M	1940	5/8							
38A TO 38L	1380	38A TO 38N	2420	3/8	1/2	2 1/4	3 3/4	4 3/4	3 3/8	6 3/4	45
50A TO 50L	1380	50A TO 50N	2420	1/2							
63A TO 63L	1380	63A TO 63N	2420	5/8							

SEE DETAIL M0.00 FOR SECTION NOTES

[1] ALLOWABLE LOADS HAVE BEEN INCREASED BY A FACTOR OF 1.2 FOR LOAD COMBINATIONS INCLUDING OVERSTRENGTH, Ω_0, PER ASCE 7-10 SEC. 12.4.3.3.

[2] FOR SLWC SLAB AND BEAM, REDUCE CONCRETE ANCHOR ALLOWABLE VERTICAL LOAD BY MULTIPLYING ALLOWABLE LOAD BY A FACTOR OF 0.68.

REVIEWED FOR CODE COMPLIANCE
HCAI
OPM-0043
BY: William Staehlin
01/23/2023
CALIFORNIA BUILDING CODE

MASON WEST
1601 E. Miraloma Ave. Placentia, CA 92870
TEL (714) 630 - 0701, www.masonwest.com

Jiefu "Jeff" Zhang, SE
California SE No. S5270

HANGER ATTACHMENT
TO CONCRETE SLAB AND BEAM
WITH (2) CONCRETE SCREW ANCHORS

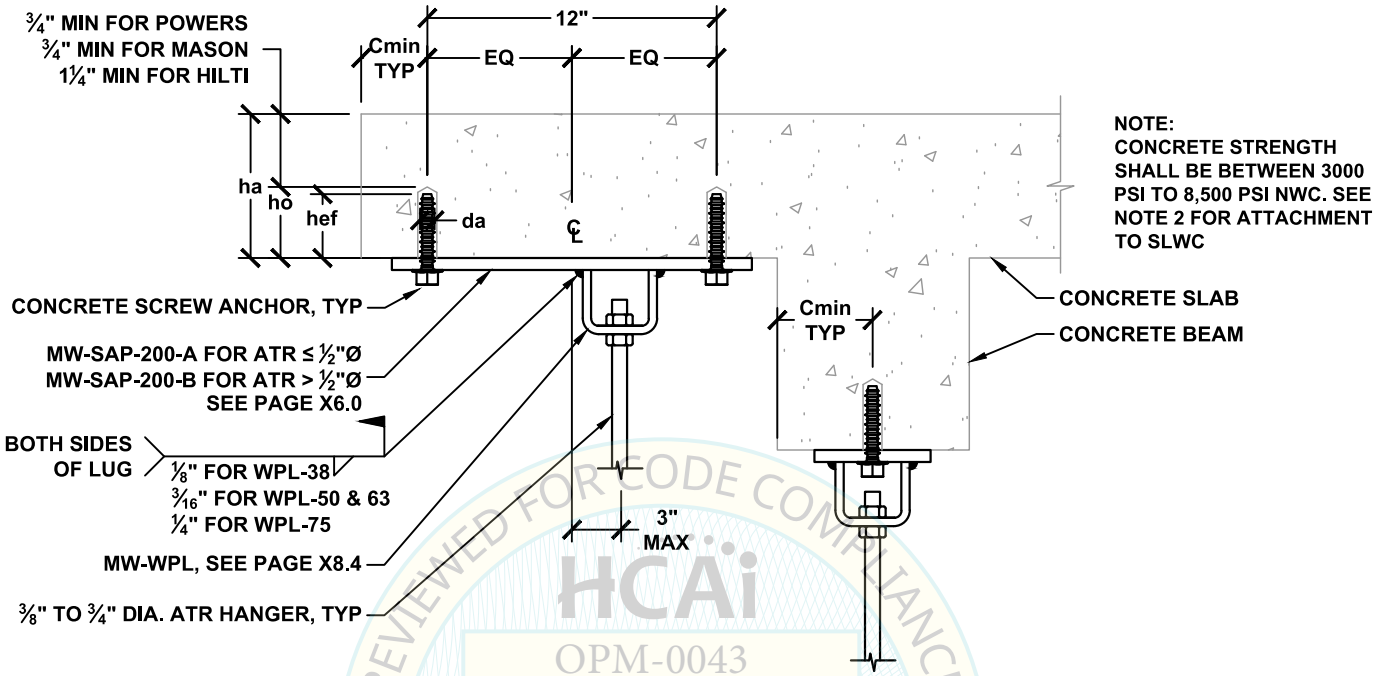

REVIEWED FOR CODE COMPLIANCE
HCAi
OPM-0043
BY: William Staehlin
DATE: 01/23/2023
CALIFORNIA BUILDING CODE

HANGER ATTACHMENT TYPE	STEEL COMPONENT ALLOWABLE VERTICAL LOAD Ta LBS	HANGER ATTACHMENT TYPE	CONCRETE ANCHOR ALLOWABLE VERTICAL LOAD Tac [1,2] LBS	ATR HANGER DIA. INCH	DEWALT/POWERS SCREW-BOLT+ CONCRETE SCREW ANCHOR (ICC ESR-3889) SPECIAL INSPECTION REQ'D						
					DIA. da INCH	MIN EFF. EMBED. hef INCH	MIN HOLE DEPTH ho INCH	MIN BASE TH. ha INCH	MIN EDGE Cmin INCH	MIN SPACING Smin INCH	MAX INSTALL. TORQUE FT-LBS
38A TO 38H	720	38A TO 38L	1470	⅜	⅝	2⅞	4⅜	6	4 5⁄16	8⅝	60
50A TO 50K	1080	50A TO 50L	1470	½							
63A TO 63M	1930	63A TO 63L	1470	⅝							
75A TO 75M	1930	75A TO 75L	1470	¾							
38A TO 38H	720	38A TO 38N	2010	⅜	⅝	3¾	5⅜	7	5⅝	11¼	60
50A TO 50K	1080	50A TO 50N	2010	½							
63A TO 63M	1930	63A TO 63N	2010	⅝							
75A TO 75M	1930	75A TO 75N	2010	¾							

SEE DETAIL M0.00 FOR SECTION NOTES

[1] ALLOWABLE LOADS HAVE BEEN INCREASED BY A FACTOR OF 1.2 FOR LOAD COMBINATIONS INCLUDING OVERSTRENGTH, Ω_0, PER ASCE 7-10 SEC. 12.4.3.3.

[2] FOR SLWC SLAB AND BEAM, REDUCE CONCRETE ANCHOR ALLOWABLE VERTICAL LOAD BY MULTIPLYING ALLOWABLE LOAD BY A FACTOR OF 0.68.

[3] SEE PAGE M1.72.1 FOR ADDITIONAL ALLOWABLE LOAD TABLES.

MASON WEST
1601 E. Miraloma Ave. Placentia, CA 92870
TEL (714) 630 - 0701, www.masonwest.com

Jiefu "Jeff" Zhang, SE
California SE No. S5270

PAGE
M1.72

HANGER ATTACHMENT
TO CONCRETE SLAB AND BEAM
WITH (2) CONCRETE SCREW ANCHORS

HANGER ATTACHMENT TYPE	STEEL COMPONENT ALLOWABLE VERTICAL LOAD Ta LBS	HANGER ATTACHMENT TYPE	CONCRETE ANCHOR ALLOWABLE VERTICAL LOAD Tac [1,2] LBS	ATR HANGER DIA. INCH	MASON IND. N.Y. SAST CONCRETE SCREW ANCHOR (ICC ESR-2713) SPECIAL INSPECTION REQ'D						
					DIA. da INCH	MIN EFF. EMBED. hef INCH	MIN HOLE DEPTH ho INCH	MIN BASE TH. ha INCH	MIN EDGE Cmin INCH	MIN SPACING Smin INCH	MAX INSTALL. TORQUE FT-LBS
38A TO 38H	720	38A TO 38M	1810	3/8	5/8	3	4 1/2	6	4 1/2	9	100
50A TO 50K	1080	50A TO 50M	1810	1/2							
63A TO 63M	1930	63A TO 63M	1810	5/8							
75A TO 75M	1930	75A TO 75M	1810	3/4							
38A TO 38H	720	38A TO 38P	3330	3/8	5/8	4 1/4	6	8 1/2	6 3/8	12 3/4	100
50A TO 50K	1080	50A TO 50P	3330	1/2							
63A TO 63M	1930	63A TO 63P	3330	5/8							
75A TO 75M	1930	75A TO 75P	3330	3/4							

HANGER ATTACHMENT TYPE	STEEL COMPONENT ALLOWABLE VERTICAL LOAD Ta LBS	HANGER ATTACHMENT TYPE	CONCRETE ANCHOR ALLOWABLE VERTICAL LOAD Tac [1,2] LBS	ATR HANGER DIA. INCH	HILTI KH-EZ CONCRETE SCREW ANCHOR (ICC ESR-3027) SPECIAL INSPECTION REQ'D						
					DIA. da INCH	MIN EFF. EMBED. hef INCH	MIN HOLE DEPTH ho INCH	MIN BASE TH. ha INCH	MIN EDGE Cmin INCH	MIN SPACING Smin INCH	MAX INSTALL. TORQUE FT-LBS
38A TO 38H	720	38A TO 38M	1880	3/8	5/8	2 1/2	3 5/8	5	3 3/4	7 1/2	85
50A TO 50K	1080	50A TO 50M	1880	1/2							
63A TO 63M	1930	63A TO 63M	1880	5/8							
75A TO 75M	1930	75A TO 75M	1880	3/4							
38A TO 38H	720	38A TO 38Q	3880	3/8	5/8	3 7/8	5 3/8	7	5 13/16	11 5/8	85
50A TO 50K	1080	50A TO 50Q	3880	1/2							
63A TO 63M	1930	63A TO 63Q	3880	5/8							
75A TO 75M	1930	75A TO 75Q	3880	3/4							

SEE DETAIL M0.00 FOR SECTION NOTES

[1] ALLOWABLE LOADS HAVE BEEN INCREASED BY A FACTOR OF 1.2 FOR LOAD COMBINATIONS INCLUDING OVERSTRENGTH, Ω_0, PER ASCE 7-10 SEC. 12.4.3.3.

[2] FOR SLWC SLAB AND BEAM, REDUCE CONCRETE ANCHOR ALLOWABLE VERTICAL LOAD BY MULTIPLYING ALLOWABLE LOAD BY A FACTOR OF 0.68.

HCAi OPM-0043 Reviewed for Code Compliance by William Staehlin DATE: 1/23/2023 CITY OF PALM SPRINGS BUILDING CODE, 2022

MASON WEST
1601 E. Miraloma Ave. Placentia, CA 92870
TEL (714) 630 - 0701, www.masonwest.com

Jiefu "Jeff" Zhang, SE
California SE No. S5270

HANGER ATTACHMENT TO CONCRETE SLAB AND BEAM WITH (4) CONCRETE SCREW ANCHORS

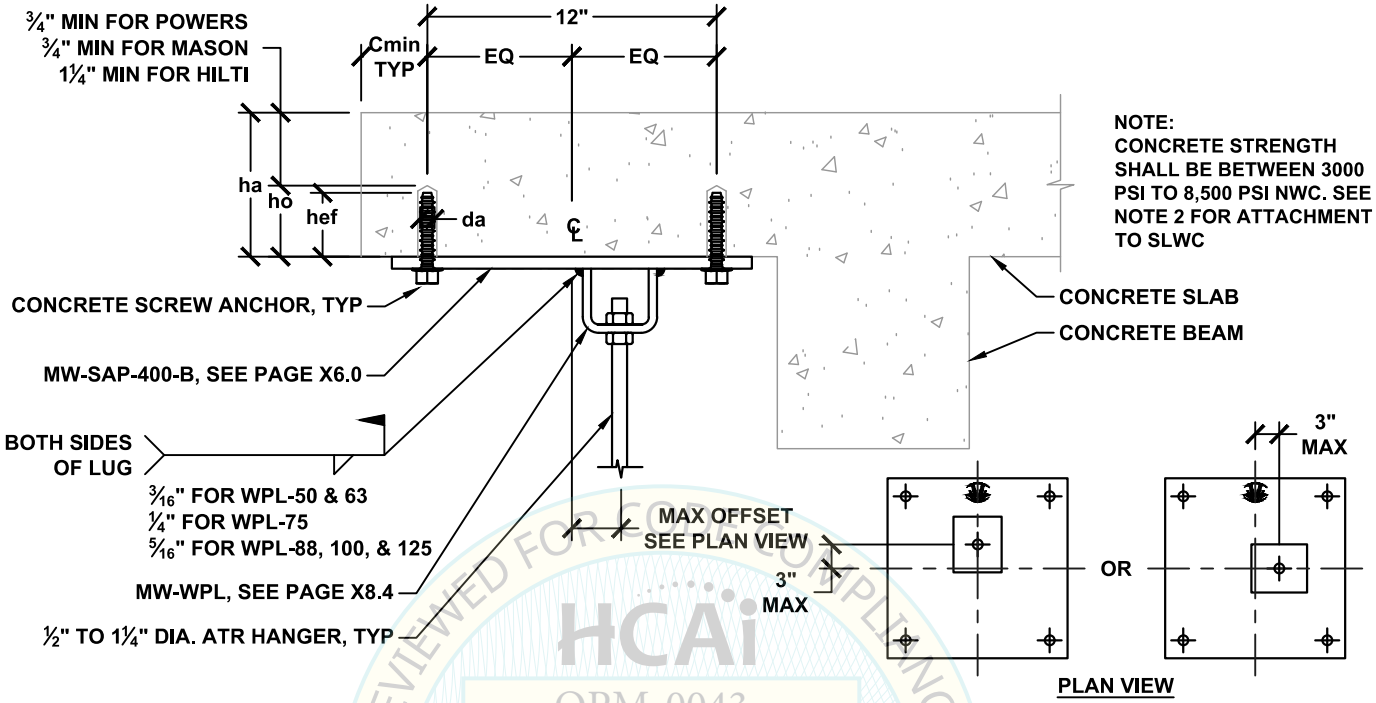

HANGER ATTACHMENT TYPE	STEEL COMPONENT ALLOWABLE VERTICAL LOAD Ta LBS	HANGER ATTACHMENT TYPE	CONCRETE ANCHOR ALLOWABLE VERTICAL LOAD Tac [1,2] LBS	ATR HANGER DIA. INCH	DEWALT/POWERS SCREW-BOLT+ CONCRETE SCREW ANCHOR (ICC ESR-3889) SPECIAL INSPECTION REQ'D						
					DIA. da INCH	MIN EFF EMBED. hef INCH	MIN HOLE DEPTH ho INCH	MIN BASE TH. ha INCH	MIN EDGE Cmin INCH	MIN SPACING Smin INCH	MAX INSTALL. TORQUE FT-LBS
50A TO 50L	1320	50A TO 50P	2930	½	5/8	2 7/8	4 3/8	6	4 5/16	8 5/8	60
63A TO 63P	2880	63A TO 63P	2930	5/8							
75A TO 75Q	3600	75A TO 75P	2930	¾							
88A TO 88Q	3600	88A TO 88P	2930	7/8							
100A TO 100Q	3600	100A TO 100P	2930	1							
125A TO 125Q	3600	125A TO 125P	2930	1¼							
50A TO 50L	1320	50A TO 50Q	4030	½	5/8	3¾	5 3/8	7	5 5/8	11¼	60
63A TO 63P	2880	63A TO 63Q	4030	5/8							
75A TO 75Q	3600	75A TO 75Q	4030	¾							
88A TO 88Q	3600	88A TO 88Q	4030	7/8							
100A TO 100Q	3600	100A TO 100Q	4030	1							
125A TO 125Q	3600	125A TO 125Q	4030	1¼							

SEE DETAIL M0.00 FOR SECTION NOTES

[1] ALLOWABLE LOADS HAVE BEEN INCREASED BY A FACTOR OF 1.2 FOR LOAD COMBINATIONS INCLUDING OVERSTRENGTH, Ω_0, PER ASCE 7-10 SEC. 12.4.3.3.

[2] FOR SLWC SLAB AND BEAM, REDUCE CONCRETE ANCHOR ALLOWABLE VERTICAL LOAD BY MULTIPLYING ALLOWABLE LOAD BY A FACTOR OF 0.68.

[3] SEE PAGE M1.73.1 FOR ADDITIONAL ALLOWABLE LOAD TABLES.

MASON WEST
1601 E. Miraloma Ave. Placentia, CA 92870
TEL (714) 630 - 0701, www.masonwest.com

Jiefu "Jeff" Zhang, SE
California SE No. S5270

PAGE
M1.73

HCAi
OPM-0043
Reviewed by William Staehlin
DATE: 1/23/2023
REVIEWED FOR CODE COMPLIANCE
CALIFORNIA BUILDING CODE, 2022

HANGER ATTACHMENT
TO CONCRETE SLAB AND BEAM
WITH (4) CONCRETE SCREW ANCHORS

HANGER ATTACHMENT TYPE	STEEL COMPONENT ALLOWABLE VERTICAL LOAD Ta LBS	HANGER ATTACHMENT TYPE	CONCRETE ANCHOR ALLOWABLE VERTICAL LOAD Tac [1,2] LBS	ATR HANGER DIA. INCH	MASON IND. N.Y. SAST CONCRETE SCREW ANCHOR (ICC ESR-2713) SPECIAL INSPECTION REQ'D						
					DIA. da INCH	MIN EFF EMBED. hef INCH	MIN HOLE DEPTH ho INCH	MIN BASE TH. ha INCH	MIN EDGE Cmin INCH	MIN SPACING Smin INCH	MAX INSTALL. TORQUE FT-LBS
50A TO 50L	1320	50A TO 50Q	3630	½	5/8	3	4½	6	4½	9	100
63A TO 63P	2880	63A TO 63Q	3630	5/8							
75A TO 75Q	3600	75A TO 75Q	3630	¾							
88A TO 88Q	3600	88A TO 88Q	3630	7/8							
100A TO 100Q	3600	100A TO 100Q	3630	1							
125A TO 125Q	3600	125A TO 125Q	3630	1¼							
50A TO 50L	1320	50A TO 50R	6670	½	5/8	4¼	6	8½	6⅜	12¾	100
63A TO 63P	2880	63A TO 63R	6670	5/8							
75A TO 75Q	3600	75A TO 75R	6670	¾							
88A TO 88Q	3600	88A TO 88R	6670	7/8							
100A TO 100Q	3600	100A TO 100R	6670	1							
125A TO 125Q	3600	125A TO 125R	6670	1¼							

HANGER ATTACHMENT TYPE	STEEL COMPONENT ALLOWABLE VERTICAL LOAD Ta LBS	HANGER ATTACHMENT TYPE	CONCRETE ANCHOR ALLOWABLE VERTICAL LOAD Tac [1,2] LBS	ATR HANGER DIA. INCH	HILTI KH-EZ CONCRETE SCREW ANCHOR (ICC ESR-3027) SPECIAL INSPECTION REQ'D						
					DIA. da INCH	MIN EFF EMBED. hef INCH	MIN HOLE DEPTH ho INCH	MIN BASE TH. ha INCH	MIN EDGE Cmin INCH	MIN SPACING Smin INCH	MAX INSTALL. TORQUE FT-LBS
50A TO 50L	1320	50A TO 50Q	3760	½	5/8	2½	3⅝	5	3¾	7½	85
63A TO 63P	2880	63A TO 63Q	3760	5/8							
75A TO 75Q	3600	75A TO 75Q	3760	¾							
88A TO 88Q	3600	88A TO 88Q	3760	7/8							
100A TO 100Q	3600	100A TO 100Q	3760	1							
125A TO 125Q	3600	125A TO 125Q	3760	1¼							
50A TO 50L	1320	50A TO 50S	7760	½	5/8	3⅞	5⅜	7	5 13/16	11⅝	85
63A TO 63P	2880	63A TO 63S	7760	5/8							
75A TO 75Q	3600	75A TO 75S	7760	¾							
88A TO 88Q	3600	88A TO 88S	7760	7/8							
100A TO 100Q	3600	100A TO 100S	7760	1							
125A TO 125Q	3600	125A TO 125S	7760	1¼							

SEE DETAIL M0.00 FOR SECTION NOTES

[1] ALLOWABLE LOADS HAVE BEEN INCREASED BY A FACTOR OF 1.2 FOR LOAD COMBINATIONS INCLUDING OVERSTRENGTH, Ω_0, PER ASCE 7-10 SEC. 12.4.3.3.

[2] FOR SLWC SLAB AND BEAM, REDUCE CONCRETE ANCHOR ALLOWABLE VERTICAL LOAD BY MULTIPLYING ALLOWABLE LOAD BY A FACTOR OF 0.68.

REVIEWED FOR CODE COMPLIANCE
HCAi
OPM-0043
William Staehlin
DATE: 1/23/2023
CALIFORNIA BUILDING CODE, 2022

MASON WEST
1601 E. Miraloma Ave. Placentia, CA 92870
TEL (714) 630 - 0701, www.masonwest.com

Jiefu "Jeff" Zhang, SE
California SE No. S5270

HANGER ATTACHMENT
TO CONCRETE SLAB AND BEAM
WITH (1) HILTI KCM-WF/PD CONCRETE INSERT

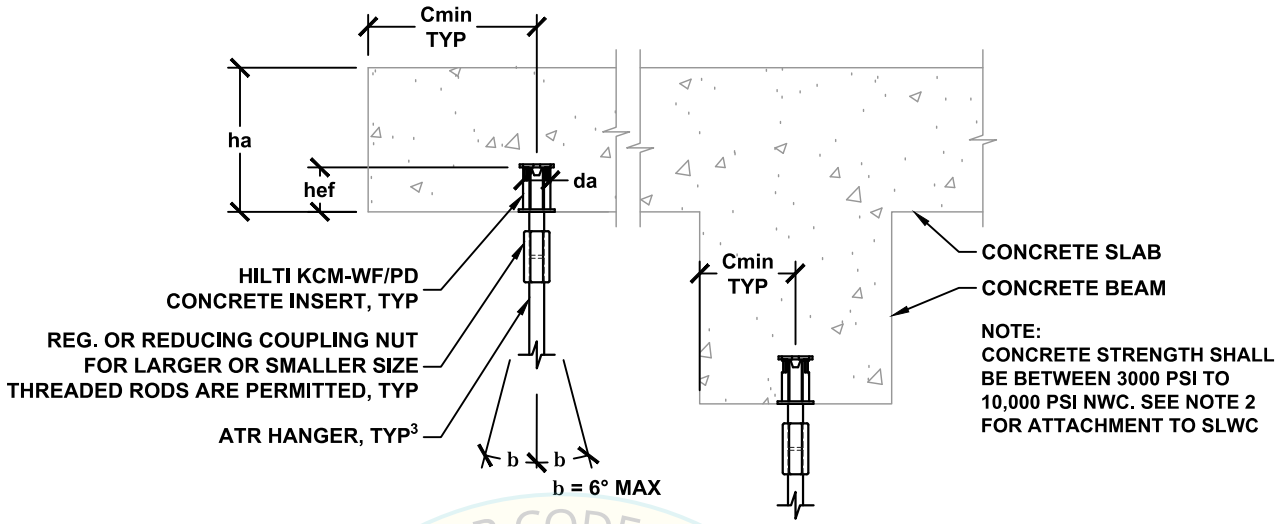

REVIEWED FOR CODE COMPLIANCE
HCAi
OPM-0043
BY: William Staehlin
DATE: 01/23/2023
CALIFORNIA BUILDING CODE

HANGER ATTACHMENT TYPE	ALLOWABLE VERTICAL LOAD Ta [1,2] LBS	MIN ATR HANGER DIA. INCH	HILTI KCM-WF/PD CONCRETE INSERT (ICC ESR-4145) SPECIAL INSPECTION REQ'D					
			INSERT COLOR	DIA. da INCH	MIN EFF. EMBED. hef INCH	MIN BASE TH. ha INCH	MIN EDGE Cmin INCH	MIN SPACING Smin INCH
38A TO 38G	690	3/8	GREEN	0.5 (3/8")	1 1/8	2 1/2	2 1/4	4 1/2
38A TO 38M	1690	3/8	RED	0.87 (1/2"-5/8")	2	3	3 1/4	6 1/2
50A TO 50M	1690	1/2						
63A TO 63M	1690	5/8						
75A TO 75M	1690	3/4						
38A TO 38N	2400	3/8	GREY	1.02 (1/2"-3/4")	3	4	4 1/2	9
50A TO 50P	3010	1/2						
63A TO 63P	3010	5/8						
75A TO 75P	3010	3/4						
88A TO 88P	3010	7/8						

SEE DETAIL M0.00 FOR SECTION NOTES

[1] ALLOWABLE LOADS HAVE BEEN INCREASED BY A FACTOR OF 1.2 FOR LOAD COMBINATIONS INCLUDING OVERSTRENGTH, Ω_0, PER ASCE 7-10 SEC. 12.4.3.3.

[2] FOR SLWC SLAB AND BEAM, REDUCE ALLOWABLE VERTICAL LOAD BY MULTIPLYING ALLOWABLE LOAD BY A FACTOR OF 0.85.

[3] ATR SHALL BE ASTM A193 GR. B7, ASTM A325, OR ASTM F1554 GR. 105.

MASON WEST
1601 E. Miraloma Ave. Placentia, CA 92870
TEL (714) 630 - 0701, www.masonwest.com

Jiefu "Jeff" Zhang, SE
California SE No. S5270

PAGE
M1.80

HANGER ATTACHMENT
TO CONCRETE SLAB AND BEAM
WITH (2) HILTI KCM-WF/PD CONCRETE INSERT

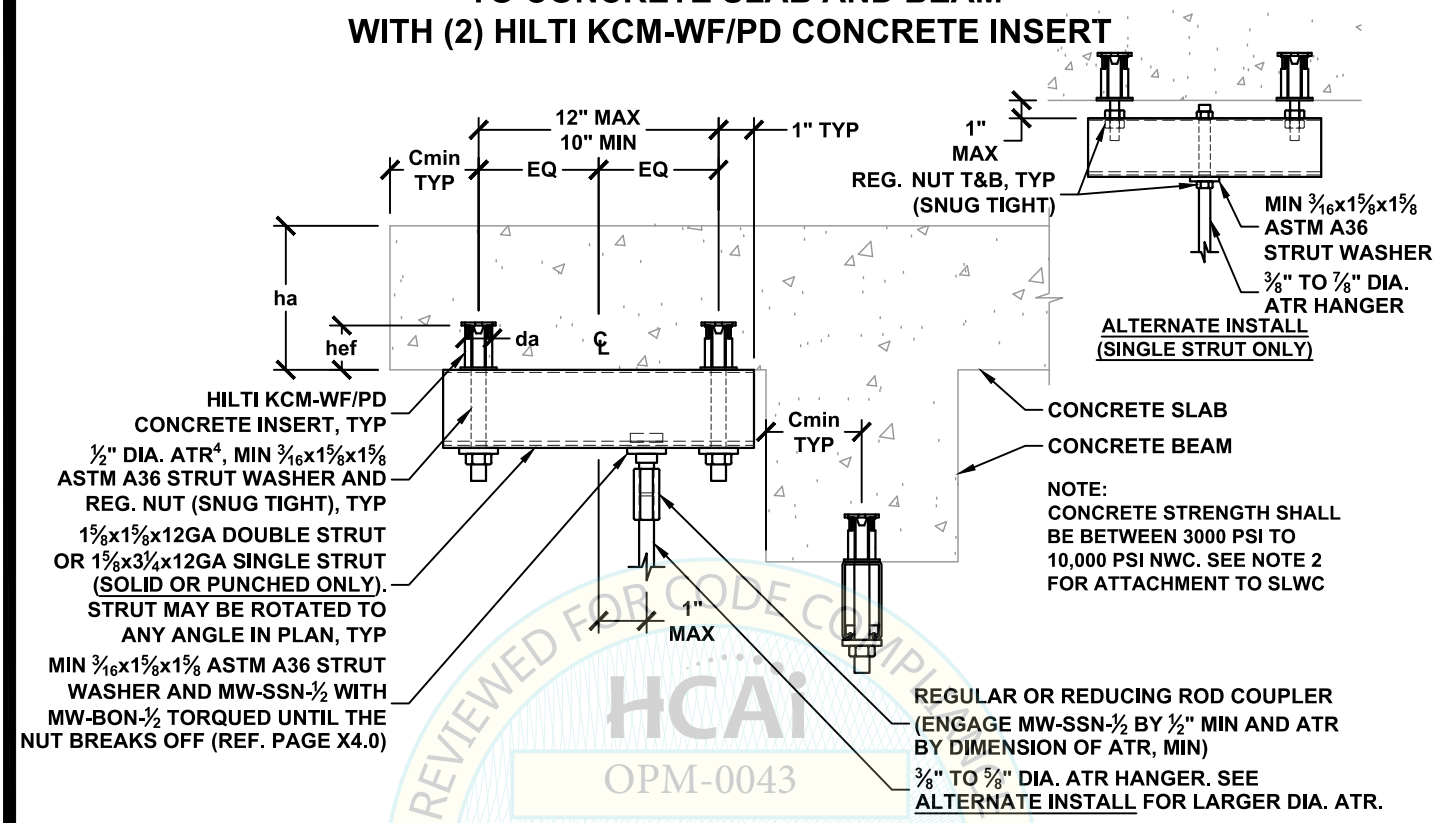

REVIEWED FOR CODE COMPLIANCE
HCAi
OPM-0043
BY: William Staehlin
DATE: 01/23/2023
CALIFORNIA BUILDING CODE 2022

HANGER ATTACHMENT TYPE	STEEL COMPONENT ALLOWABLE VERTICAL LOAD Ta LBS	HANGER ATTACHMENT TYPE	CONCRETE ANCHOR ALLOWABLE VERTICAL LOAD Tac [1,2] LBS	MIN ATR HANGER DIA. INCH	HILTI KCM-WF/PD CONCRETE INSERT (ICC ESR-4145) SPECIAL INSPECTION REQ'D					
					INSERT COLOR	DIA. da INCH	MIN EFF. EMBED. hef INCH	MIN BASE TH. ha INCH	MIN EDGE Cmin INCH	MIN SPACING Smin INCH
38A TO 38N	2400	38A TO 38P	2820	3/8	RED	0.87 (1/2")	2	3	3 1/4	6 1/2
50A TO 50P	2620	50A TO 50P	2820	1/2						
63A TO 63P	2620	63A TO 63P	2820	5/8						
75A TO 75P	2620	75A TO 75P	2820	3/4						
88A TO 88P	2620	88A TO 88P	2820	7/8						
38A TO 38N	2400	38A TO 38R	5020	3/8	GREY	1.02 (1/2")	3	4	4 1/2	9
50A TO 50P	2620	50A TO 50R	5020	1/2						
63A TO 63P	2620	63A TO 63R	5020	5/8						
75A TO 75P	2620	75A TO 75R	5020	3/4						
88A TO 88P	2620	88A TO 88R	5020	7/8						

SEE DETAIL M0.00 FOR SECTION NOTES

[1] ALLOWABLE LOADS HAVE BEEN INCREASED BY A FACTOR OF 1.2 FOR LOAD COMBINATIONS INCLUDING OVERSTRENGTH, Ω_0, PER ASCE 7-10 SEC. 12.4.3.3.

[2] FOR SLWC SLAB AND BEAM, REDUCE ALLOWABLE VERTICAL LOAD BY MULTIPLYING ALLOWABLE LOAD BY A FACTOR OF 0.85.

[3] ATR HANGER PERMITTED FOR COMPRESSION AND TENSION LOADING CONDITIONS ONLY. NO SHEAR LOADING.

[4] ATR SHALL BE ASTM A193 GR. B7, ASTM A325, OR ASTM F1554 GR. 105.

MASON WEST
1601 E. Miraloma Ave. Placentia, CA 92870
TEL (714) 630 - 0701, www.masonwest.com

Jiefu "Jeff" Zhang, SE
California SE No. S5270

PAGE
M1.81

HANGER ATTACHMENT
TO CONCRETE SLAB AND BEAM
WITH (1) DEWALT/POWERS WOOD-KNOCKER/WOOD-KNOCKER II+ CONCRETE INSERT

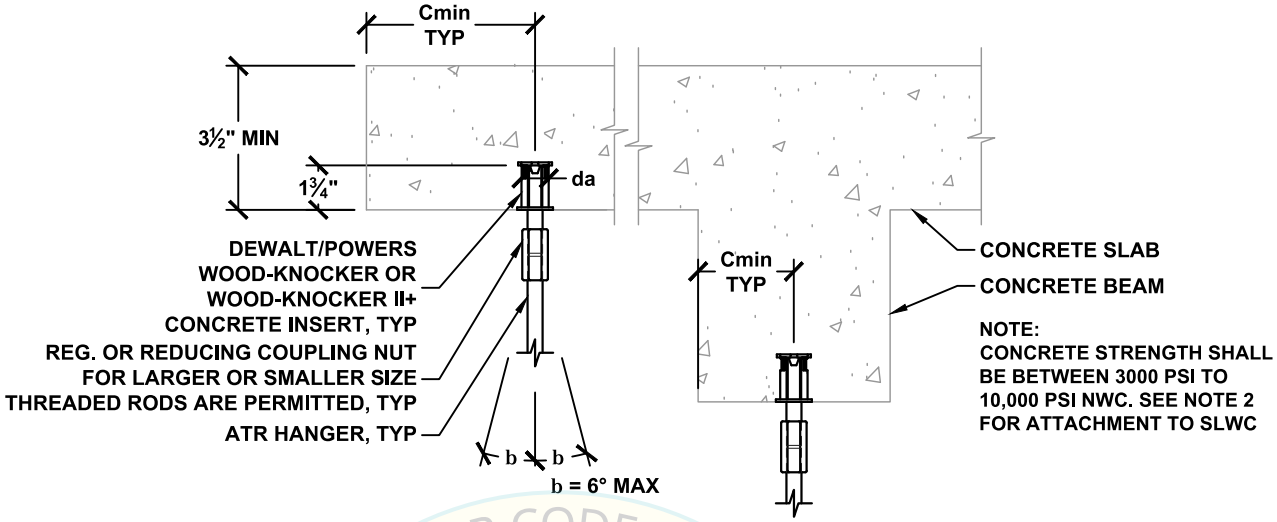

REVIEWED FOR CODE COMPLIANCE
HCAi
OPM-0043
BY: William Staehlin
DATE: 1/23/2023
CALIFORNIA BUILDING CODE 2022

HANGER ATTACHMENT TYPE	ALLOWABLE VERTICAL LOAD Ta [1,2] LBS	MIN ATR HANGER DIA. INCH	DEWALT/POWERS WOOD-KNOCKER OR WOOD-KNOCKER II+ CONCRETE INSERT (ICC ESR-3657) SPECIAL INSPECTION REQ'D		
			DIA. da INCH	MIN EDGE Cmin INCH	MIN SPACING Smin INCH
38A TO 38L	1340	⅜	0.7 (⅜"Ø)	3	6
38A TO 38L	1340	⅜	0.7 (½"Ø)	3	6
50A TO 50L	1340	½			
63A TO 63L	1340	⅝			
50A TO 50L	1340	½	1.0 (⅝"Ø)	3	6
63A TO 63L	1340	⅝			
75A TO 75L	1340	¾			
63A TO 63L	1340	⅝	1.0 (¾"Ø)	3	6
75A TO 75L	1340	¾			
88A TO 88L	1340	⅞			

SEE DETAIL M0.00 FOR SECTION NOTES

[1] ALLOWABLE LOADS HAVE BEEN INCREASED BY A FACTOR OF 1.2 FOR LOAD COMBINATIONS INCLUDING OVERSTRENGTH, Ω_0, PER ASCE 7-10 SEC. 12.4.3.3.

[2] FOR SLWC SLAB AND BEAM, REDUCE ALLOWABLE VERTICAL LOAD BY MULTIPLYING ALLOWABLE LOAD BY A FACTOR OF 0.85.

MASON WEST
1601 E. Miraloma Ave. Placentia, CA 92870
TEL (714) 630 - 0701, www.masonwest.com

Jiefu "Jeff" Zhang, SE
California SE No. S5270

PAGE
M1.90

HANGER ATTACHMENT
TO CONCRETE SLAB AND BEAM
WITH (2) DEWALT/POWERS WOOD-KNOCKER/WOOD-KNOCKER II+ CONCRETE INSERT

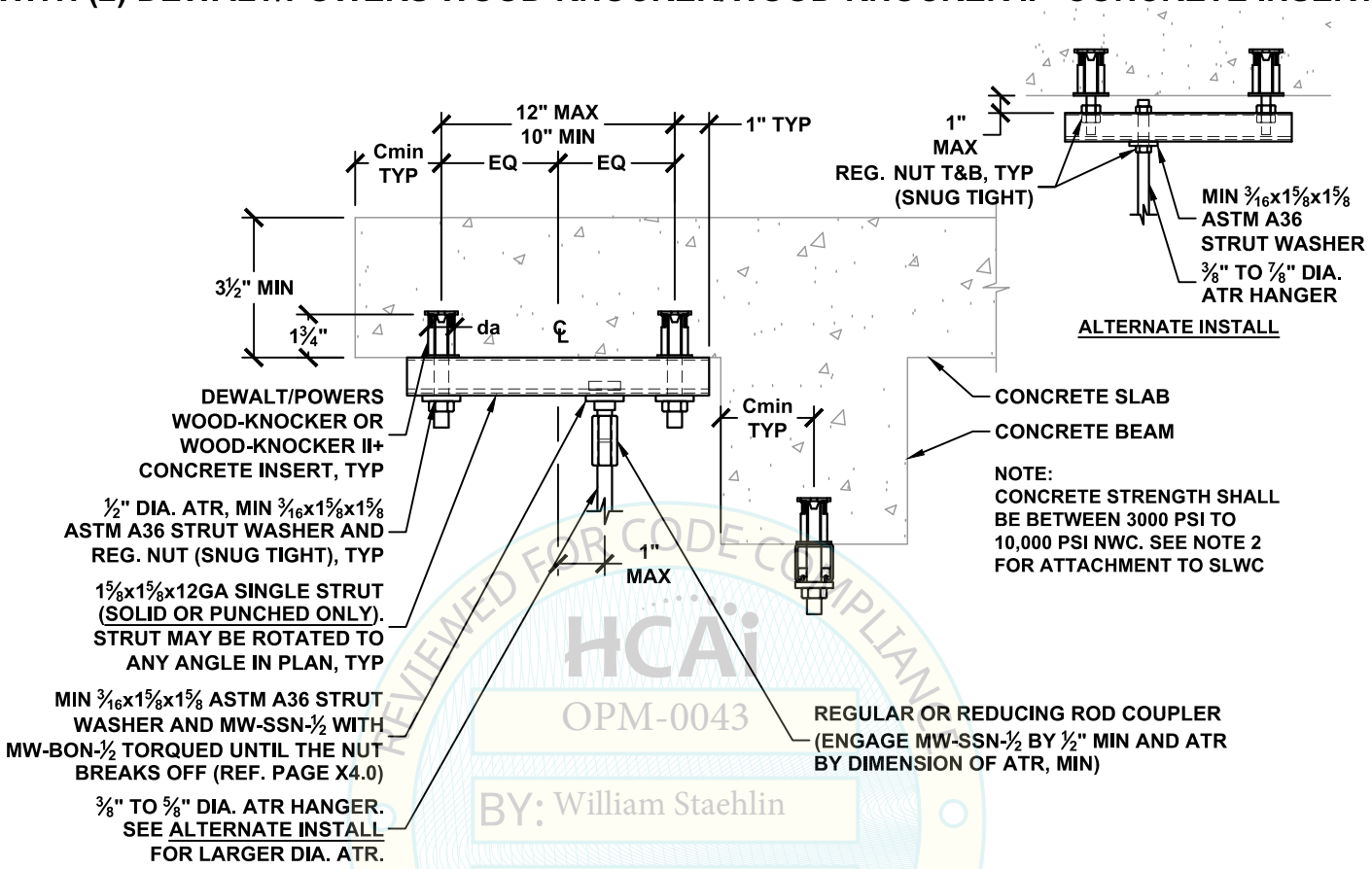

REVIEWED FOR CODE COMPLIANCE
HCAi
OPM-0043
BY: William Staehlin
DATE: 01/23/2023
CALIFORNIA BUILDING CODE 2022

HANGER ATTACHMENT TYPE	STEEL COMPONENT ALLOWABLE VERTICAL LOAD Ta LBS	HANGER ATTACHMENT TYPE	CONCRETE ANCHOR ALLOWABLE VERTICAL LOAD Tac [1,2] LBS	MIN ATR HANGER DIA. INCH	DEWALT/POWERS WOOD-KNOCKER OR WOOD-KNOCKER II+ CONCRETE INSERT (ICC ESR-3657) SPECIAL INSPECTION REQ'D		
					DIA. da INCH	MIN EDGE Cmin INCH	MIN SPACING Smin INCH
38A TO 38L	1300	38A TO 38N	2230	3/8	0.7 (½"Ø)	3	6
50A TO 50L	1300	50A TO 50N	2230	½			
63A TO 63L	1300	63A TO 63N	2230	5/8			
75A TO 75L	1300	75A TO 75N	2230	¾			
88A TO 88L	1300	88A TO 88N	2230	7/8			

SEE DETAIL M0.00 FOR SECTION NOTES

[1] ALLOWABLE LOADS HAVE BEEN INCREASED BY A FACTOR OF 1.2 FOR LOAD COMBINATIONS INCLUDING OVERSTRENGTH, Ω_0, PER ASCE 7-10 SEC. 12.4.3.3.

[2] FOR SLWC SLAB AND BEAM, REDUCE ALLOWABLE VERTICAL LOAD BY MULTIPLYING ALLOWABLE LOAD BY A FACTOR OF 0.85.

[3] ATR HANGER PERMITTED FOR COMPRESSION AND TENSION LOADING CONDITIONS ONLY. NO SHEAR LOADING.

MASON WEST
1601 E. Miraloma Ave. Placentia, CA 92870
TEL (714) 630 - 0701, www.masonwest.com

Jiefu "Jeff" Zhang, SE
California SE No. S5270

HANGER ATTACHMENT
TO CONCRETE SLAB AND BEAM
WITH (2) DEWALT/POWERS WOOD-KNOCKER/WOOD-KNOCKER II+ CONCRETE INSERT

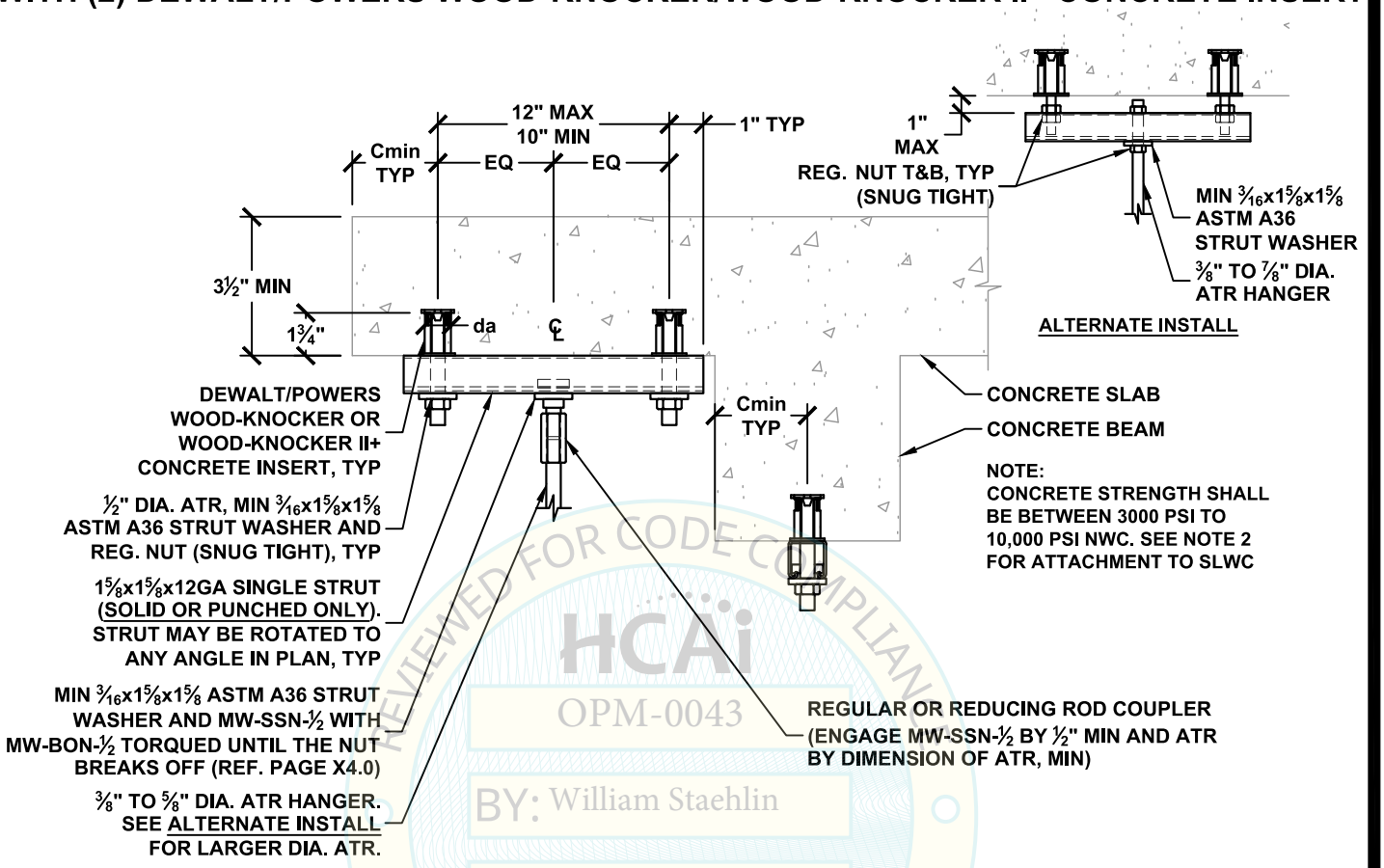

REVIEWED FOR CODE COMPLIANCE
HCAi
OPM-0043
BY: William Staehlin
DATE: 01/23/2023
CALIFORNIA BUILDING CODE 2022

HANGER ATTACHMENT TYPE	STEEL COMPONENT ALLOWABLE VERTICAL LOAD Ta LBS	HANGER ATTACHMENT TYPE	CONCRETE ANCHOR ALLOWABLE VERTICAL LOAD Tac [1,2] LBS	MIN ATR HANGER DIA. INCH	DEWALT/POWERS WOOD-KNOCKER OR WOOD-KNOCKER II+ CONCRETE INSERT (ICC ESR-3657) SPECIAL INSPECTION REQ'D		
					DIA. da INCH	MIN EDGE Cmin INCH	MIN SPACING Smin INCH
38A TO 38L	1300	38A TO 38P	2680	⅜	0.7 (½"Ø)	3	6
50A TO 50L	1300	50A TO 50P	2680	½			
63A TO 63L	1300	63A TO 63P	2680	⅝			
75A TO 75L	1300	75A TO 75P	2680	¾			
88A TO 88L	1300	88A TO 88P	2680	⅞			

SEE DETAIL M0.00 FOR SECTION NOTES

[1] ALLOWABLE LOADS HAVE BEEN INCREASED BY A FACTOR OF 1.2 FOR LOAD COMBINATIONS INCLUDING OVERSTRENGTH, Ω_0, PER ASCE 7-10 SEC. 12.4.3.3.

[2] FOR SLWC SLAB AND BEAM, REDUCE ALLOWABLE VERTICAL LOAD BY MULTIPLYING ALLOWABLE LOAD BY A FACTOR OF 0.85.

MASON WEST
1601 E. Miraloma Ave. Placentia, CA 92870
TEL (714) 630 - 0701, www.masonwest.com

Jiefu "Jeff" Zhang, SE
California SE No. S5270

HANGER ATTACHMENT
TO CONCRETE SLAB AND BEAM
WITH (2) DEWALT/POWERS WOOD-KNOCKER/WOOD-KNOCKER II+ CONCRETE INSERT

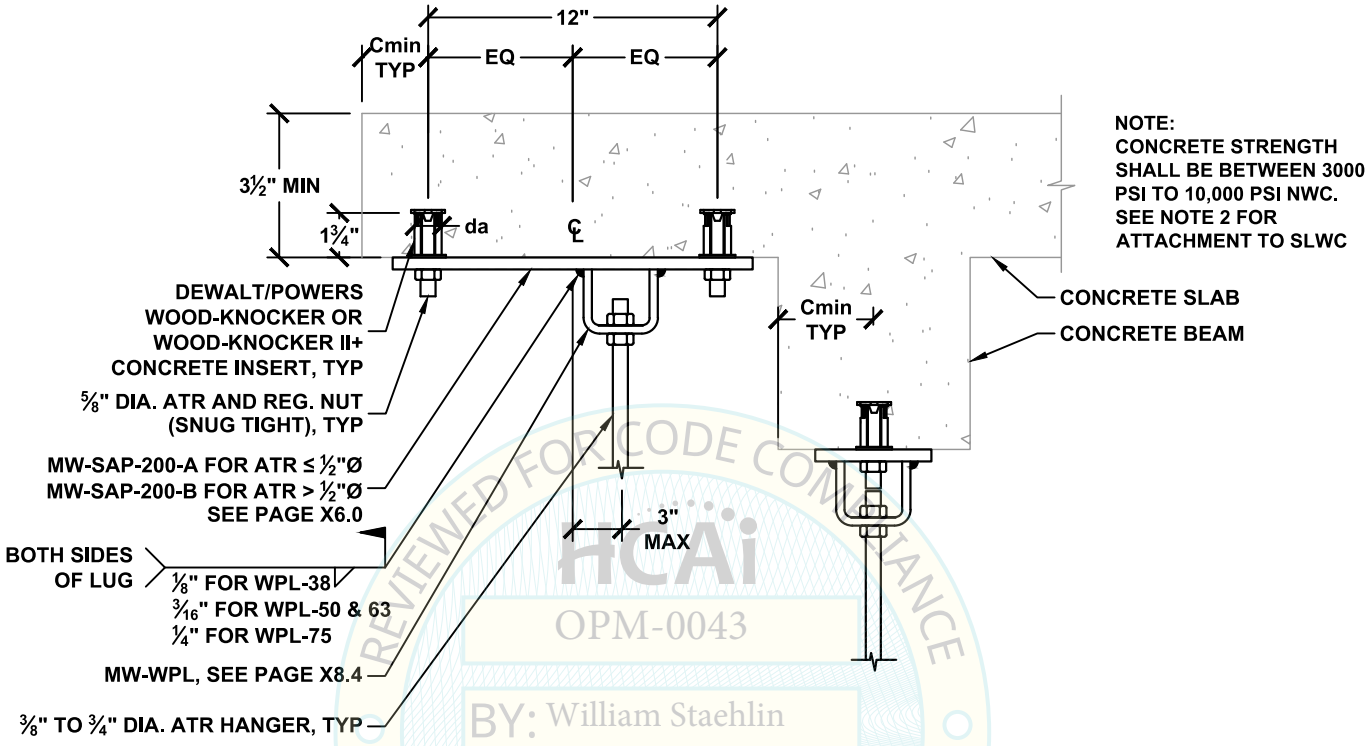

REVIEWED FOR CODE COMPLIANCE
CALIFORNIA BUILDING CODE 2022
HCAi
OPM-0043
BY: William Staehlin
DATE: 01/23/2023

HANGER ATTACHMENT TYPE	STEEL COMPONENT ALLOWABLE VERTICAL LOAD Ta LBS	HANGER ATTACHMENT TYPE	CONCRETE ANCHOR ALLOWABLE VERTICAL LOAD Tac [1,2] LBS	MIN ATR HANGER DIA. INCH	DEWALT/POWERS WOOD-KNOCKER OR WOOD-KNOCKER II+ CONCRETE INSERT (ICC ESR-3657) SPECIAL INSPECTION REQ'D		
					DIA. da INCH	MIN EDGE Cmin INCH	MIN SPACING Smin INCH
38A TO 38H	720	38A TO 38M	1790	⅜	1.0 (⅝"Ø)	3	6
50A TO 50K	1080	50A TO 50M	1790	½			
63A TO 63M	1930	63A TO 63M	1790	⅝			
75A TO 75M	1930	75A TO 75M	1790	¾			

SEE DETAIL M0.00 FOR SECTION NOTES

[1] ALLOWABLE LOADS HAVE BEEN INCREASED BY A FACTOR OF 1.2 FOR LOAD COMBINATIONS INCLUDING OVERSTRENGTH, Ω_0, PER ASCE 7-10 SEC. 12.4.3.3.

[2] FOR SLWC SLAB AND BEAM, REDUCE ALLOWABLE VERTICAL LOAD BY MULTIPLYING ALLOWABLE LOAD BY A FACTOR OF 0.85.

MASON WEST
1601 E. Miraloma Ave. Placentia, CA 92870
TEL (714) 630 - 0701, www.masonwest.com

Jiefu "Jeff" Zhang, SE
California SE No. S5270

PAGE
M1.92

HANGER ATTACHMENT
TO CONCRETE SLAB AND BEAM
WITH (4) DEWALT/POWERS WOOD-KNOCKER/WOOD-KNOCKER II+ CONCRETE INSERT

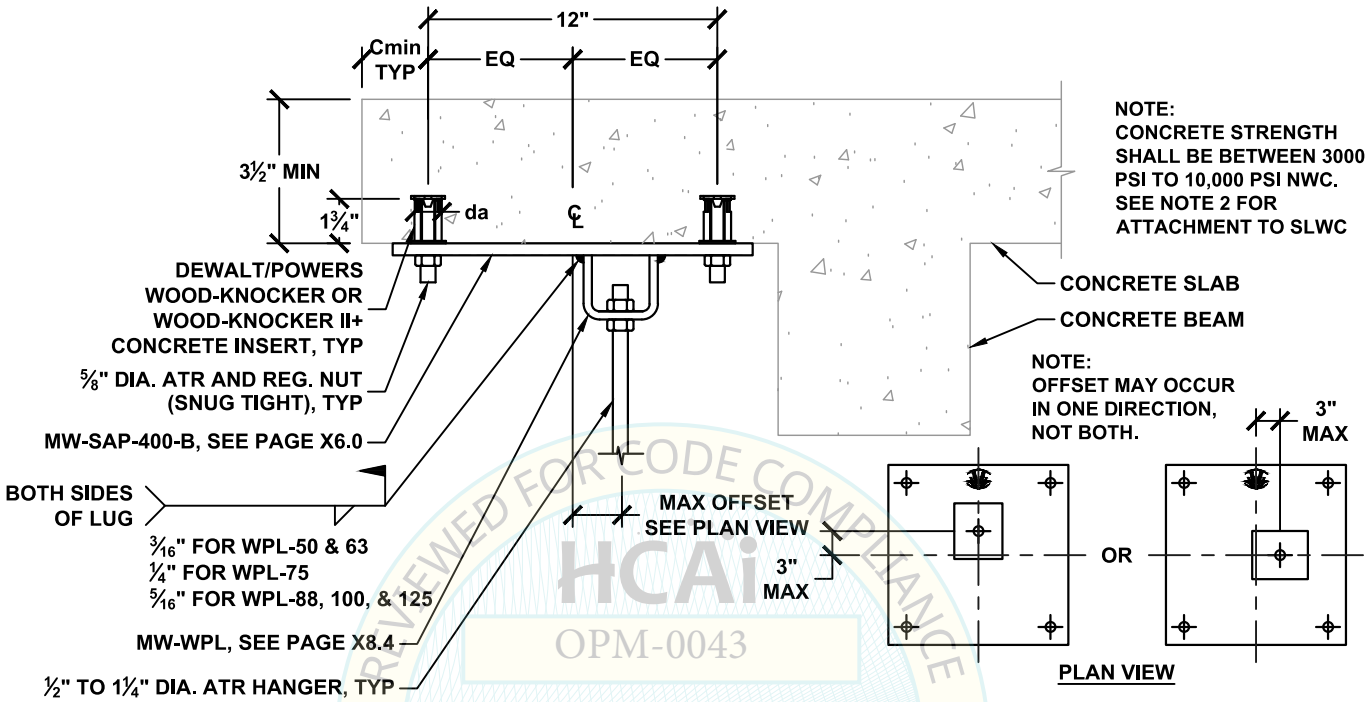

HANGER ATTACHMENT TYPE	STEEL COMPONENT ALLOWABLE VERTICAL LOAD Ta LBS	HANGER ATTACHMENT TYPE	CONCRETE ANCHOR ALLOWABLE VERTICAL LOAD Tac [1,2] LBS	MIN ATR HANGER DIA. INCH	DEWALT/POWERS WOOD-KNOCKER OR WOOD-KNOCKER II+ CONCRETE INSERT (ICC ESR-3657) SPECIAL INSPECTION REQ'D		
					DIA. da INCH	MIN EDGE Cmin INCH	MIN SPACING Smin INCH
50A TO 50P	1320	50A TO 50Q	3570	½	1.0 (⅝"Ø)	3	6
63A TO 63Q	3600	63A TO 63Q	3570	⅝			
75A TO 75Q	3600	75A TO 75Q	3570	¾			
88A TO 88Q	3600	88A TO 88Q	3570	⅞			
100A TO 100Q	3600	100A TO 100Q	3570	1			
125A TO 125Q	3600	125A TO 125Q	3570	1¼			

SEE DETAIL M0.00 FOR SECTION NOTES

[1] ALLOWABLE LOADS HAVE BEEN INCREASED BY A FACTOR OF 1.2 FOR LOAD COMBINATIONS INCLUDING OVERSTRENGTH, Ω_0, PER ASCE 7-10 SEC. 12.4.3.3.

[2] FOR SLWC SLAB AND BEAM, REDUCE ALLOWABLE VERTICAL LOAD BY MULTIPLYING ALLOWABLE LOAD BY A FACTOR OF 0.85.

REVIEWED FOR CODE COMPLIANCE
HCAi
OPM-0043
BY: William Staehlin
DATE: 01/23/2023
CALIFORNIA BUILDING CODE, 2022

MASON WEST
1601 E. Miraloma Ave. Placentia, CA 92870
TEL (714) 630 - 0701, www.masonwest.com

Jiefu "Jeff" Zhang, SE
California SE No. S5270

PAGE
M1.93

HANGER ATTACHMENT
TO CONCRETE SLAB AND BEAM
WITH (1) CADDY CRLW CONCRETE INSERT

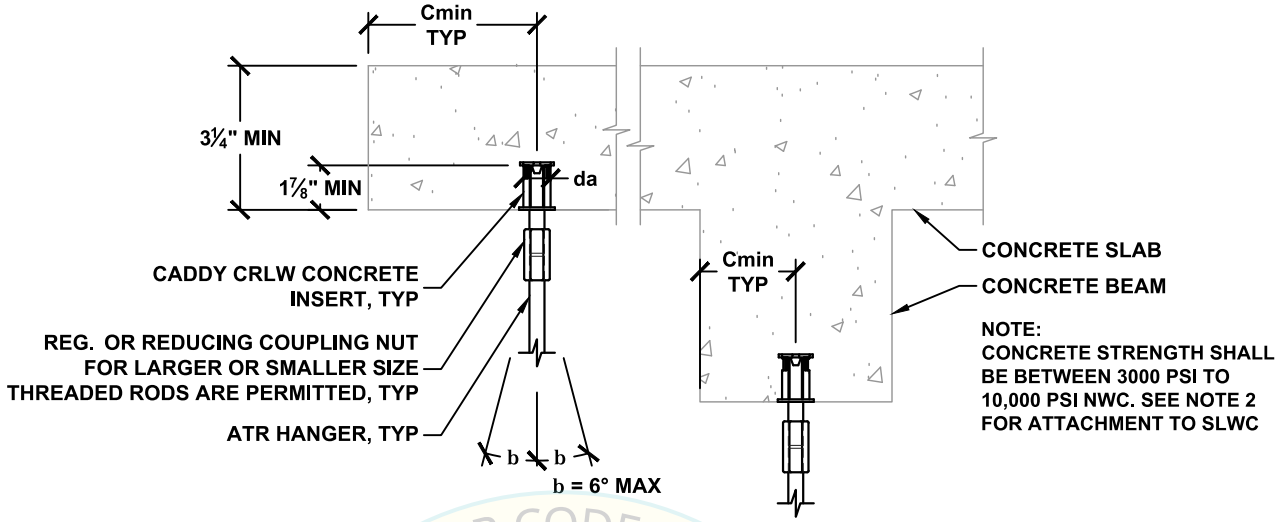

REVIEWED FOR CODE COMPLIANCE
HCAi
OPM-0043
BY: William Staehlin
DATE: 01/23/2023
CALIFORNIA BUILDING CODE 2022

HANGER ATTACHMENT TYPE	ALLOWABLE VERTICAL LOAD Ta [1,2] LBS	MIN ATR HANGER DIA. INCH	CADDY CRLW CONCRETE INSERT (ICC ESR-3864) SPECIAL INSPECTION REQ'D		
			DIA. da INCH	MIN EDGE Cmin INCH	MIN SPACING Smin INCH
38A TO 38L	1500	⅜	0.61 (⅜"Ø)	6	8
38A TO 38L	1500	⅜	0.71 (½"Ø)	6	8
50A TO 50L	1500	½			
63A TO 63L	1500	⅝			

SEE DETAIL M0.00 FOR SECTION NOTES

[1] ALLOWABLE LOADS HAVE BEEN INCREASED BY A FACTOR OF 1.2 FOR LOAD COMBINATIONS INCLUDING OVERSTRENGTH, Ω_0, PER ASCE 7-10 SEC. 12.4.3.3.

[2] FOR SLWC SLAB AND BEAM, REDUCE ALLOWABLE VERTICAL LOAD BY MULTIPLYING ALLOWABLE LOAD BY A FACTOR OF 0.85.

MASON WEST
1601 E. Miraloma Ave. Placentia, CA 92870
TEL (714) 630 - 0701, www.masonwest.com

Jiefu "Jeff" Zhang, SE
California SE No. S5270

PAGE
M1.110

HANGER ATTACHMENT
TO CONCRETE SLAB AND BEAM
WITH (2) CADDY CRLW CONCRETE INSERT

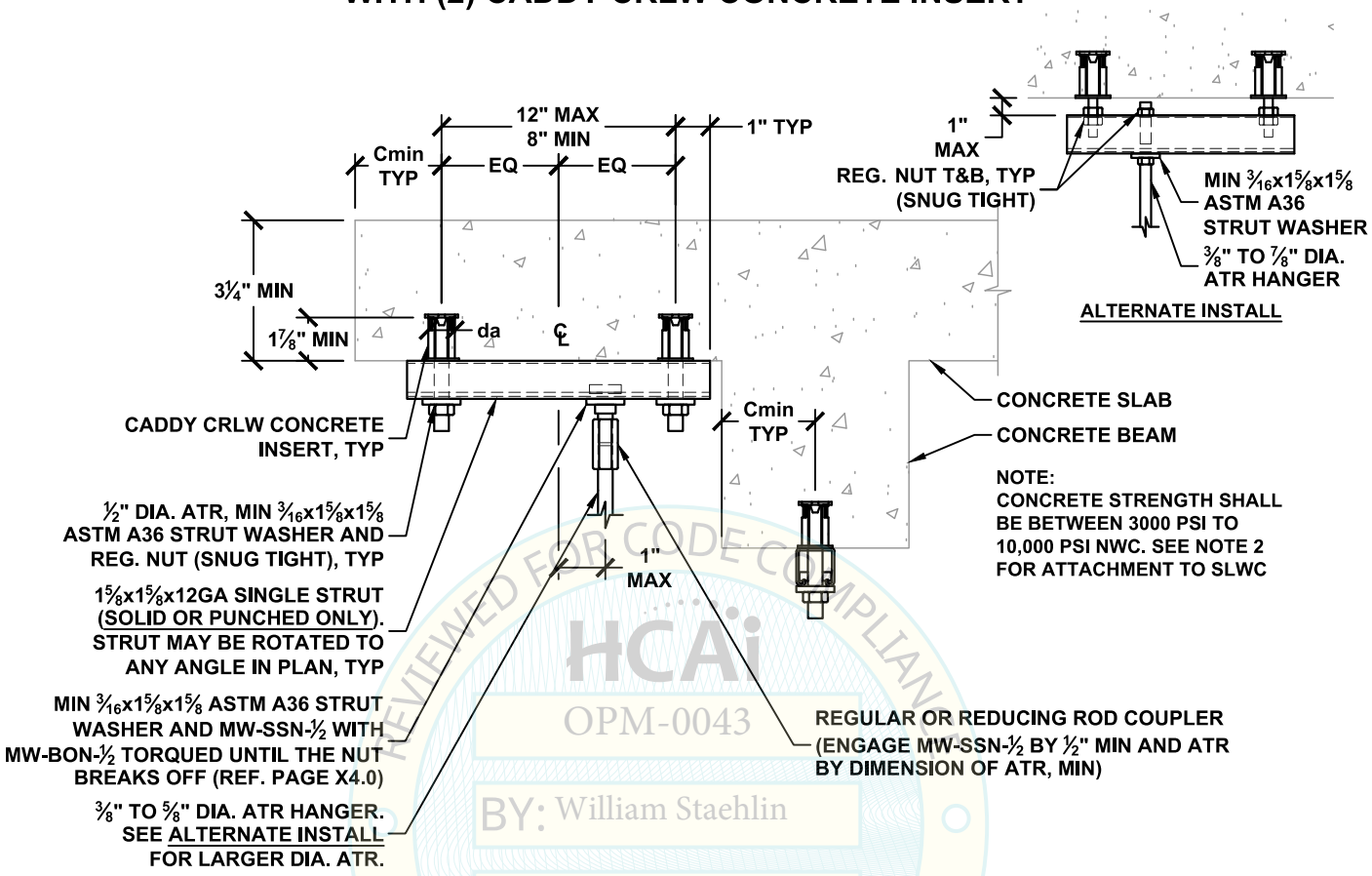

REVIEWED FOR CODE COMPLIANCE
HCAi
OPM-0043
BY: William Staehlin
DATE: 01/23/2023
CALIFORNIA BUILDING CODE 2022

HANGER ATTACHMENT TYPE	STEEL COMPONENT ALLOWABLE VERTICAL LOAD Ta LBS	HANGER ATTACHMENT TYPE	CONCRETE ANCHOR ALLOWABLE VERTICAL LOAD Tac [1,2] LBS	MIN ATR HANGER DIA. INCH	CADDY CRLW CONCRETE INSERT (ICC ESR-3864) SPECIAL INSPECTION REQ'D		
					DIA. da INCH	MIN EDGE Cmin INCH	MIN SPACING Smin INCH
38A TO 38L	1300	38A TO 38P	2500	⅜	0.71 (½"Ø)	6	8
50A TO 50L	1300	50A TO 50P	2500	½			
63A TO 63L	1300	63A TO 63P	2500	⅝			
75A TO 75L	1300	75A TO 75P	2500	¾			
88A TO 88L	1300	88A TO 88P	2500	⅞			

SEE DETAIL M0.00 FOR SECTION NOTES

[1] ALLOWABLE LOADS HAVE BEEN INCREASED BY A FACTOR OF 1.2 FOR LOAD COMBINATIONS INCLUDING OVERSTRENGTH, Ω_0, PER ASCE 7-10 SEC. 12.4.3.3.

[2] FOR SLWC SLAB AND BEAM, REDUCE ALLOWABLE VERTICAL LOAD BY MULTIPLYING ALLOWABLE LOAD BY A FACTOR OF 0.85.

[3] ATR HANGER PERMITTED FOR COMPRESSION AND TENSION LOADING CONDITIONS ONLY. NO SHEAR LOADING.

MASON WEST
1601 E. Miraloma Ave. Placentia, CA 92870
TEL (714) 630 - 0701, www.masonwest.com

Jiefu "Jeff" Zhang, SE
California SE No. S5270

PAGE
M1.111

HANGER ATTACHMENT
TO CONCRETE SLAB AND BEAM
WITH (2) CADDY CRLW CONCRETE INSERT

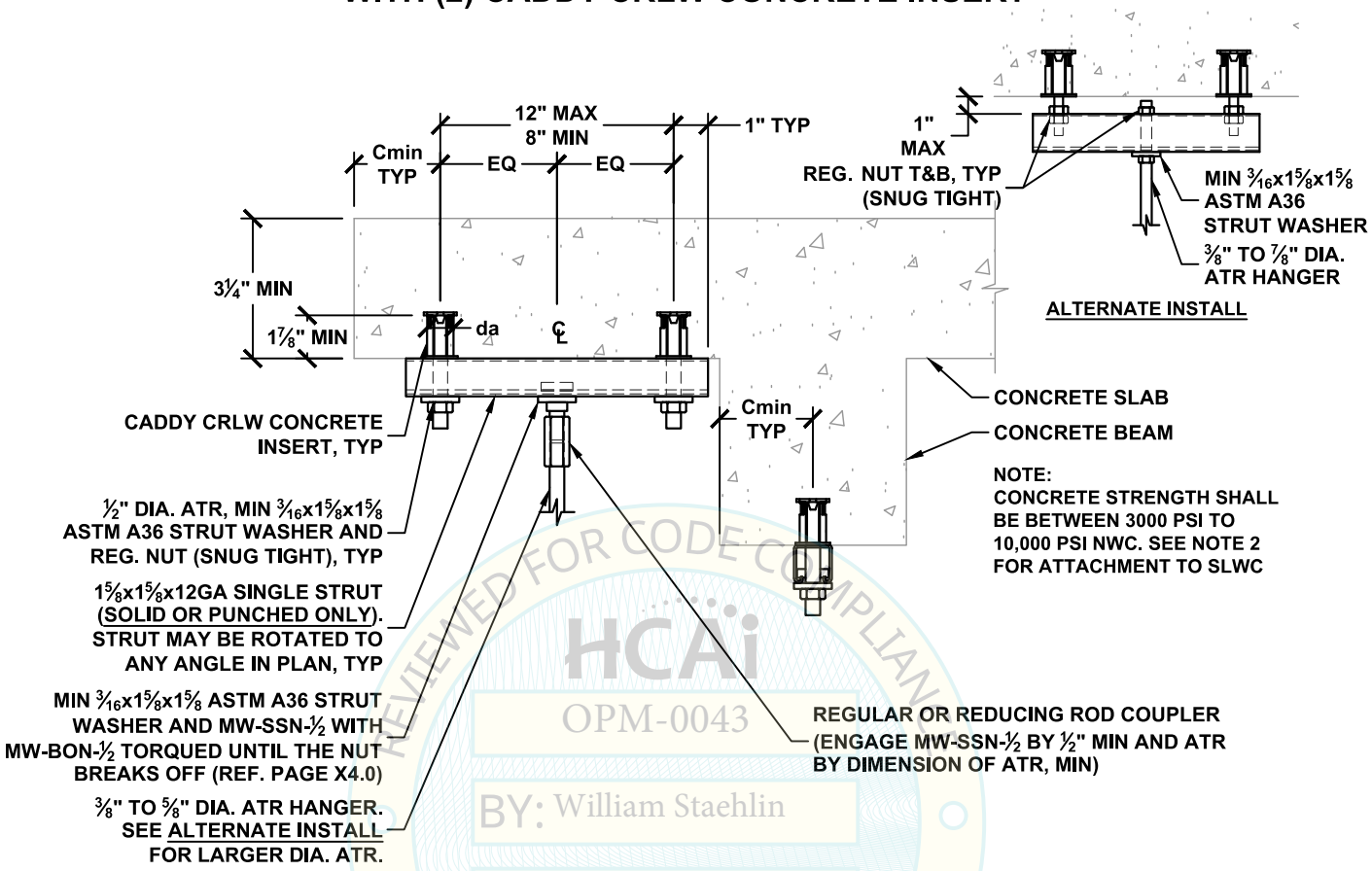

REVIEWED FOR CODE COMPLIANCE
HCAi
OPM-0043
BY: William Staehlin
DATE: 01/23/2023
CALIFORNIA BUILDING CODE 2022

HANGER ATTACHMENT TYPE	STEEL COMPONENT ALLOWABLE VERTICAL LOAD Ta LBS	HANGER ATTACHMENT TYPE	CONCRETE ANCHOR ALLOWABLE VERTICAL LOAD Tac [1,2] LBS	MIN ATR HANGER DIA. INCH	CADDY CRLW CONCRETE INSERT (ICC ESR-3864) SPECIAL INSPECTION REQ'D		
					DIA. da INCH	MIN EDGE Cmin INCH	MIN SPACING Smin INCH
38A TO 38L	1300	38A TO 38P	3000	⅜	0.71 (½"Ø)	6	8
50A TO 50L	1300	50A TO 50P	3000	½			
63A TO 63L	1300	63A TO 63P	3000	⅝			
75A TO 75L	1300	75A TO 75P	3000	¾			
88A TO 88L	1300	88A TO 88P	3000	⅞			

SEE DETAIL M0.00 FOR SECTION NOTES

[1] ALLOWABLE LOADS HAVE BEEN INCREASED BY A FACTOR OF 1.2 FOR LOAD COMBINATIONS INCLUDING OVERSTRENGTH, Ω_0, PER ASCE 7-10 SEC. 12.4.3.3.

[2] FOR SLWC SLAB AND BEAM, REDUCE ALLOWABLE VERTICAL LOAD BY MULTIPLYING ALLOWABLE LOAD BY A FACTOR OF 0.85.

MASON WEST
1601 E. Miraloma Ave. Placentia, CA 92870
TEL (714) 630 - 0701, www.masonwest.com

Jiefu "Jeff" Zhang, SE
California SE No. S5270

HANGER ATTACHMENT
TO CONCRETE SLAB AND BEAM
WITH (1) HILTI KB-TZ2 CARBON STEEL CONCRETE ANCHOR

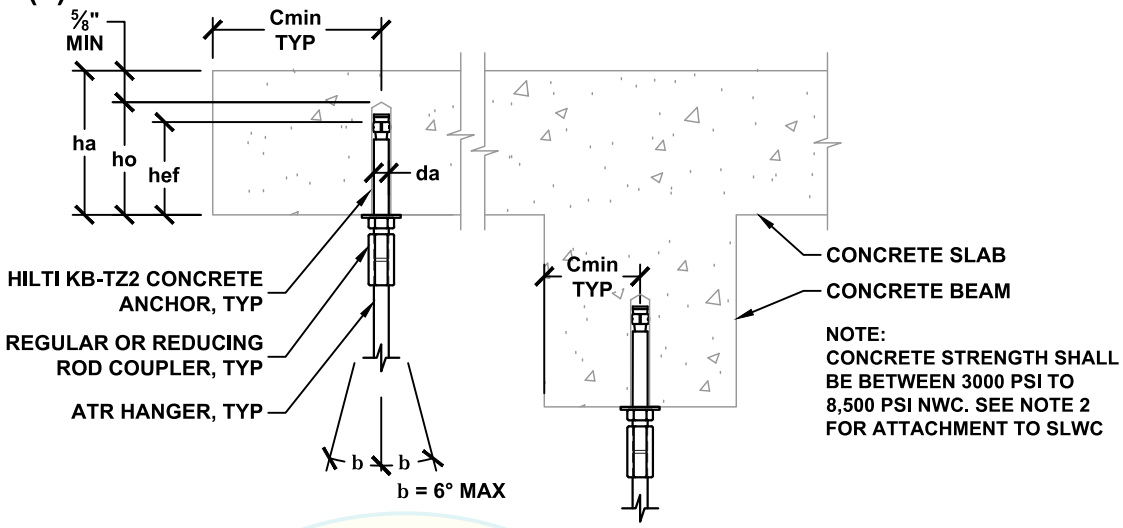

HANGER ATTACHMENT TYPE	ALLOWABLE VERTICAL LOAD Ta [1,2] LBS	ATR HANGER DIA. INCH	HILTI KB-TZ2 CONCRETE ANCHOR (ICC ESR-4266) SPECIAL INSPECTION REQ'D						
			DIA. da INCH	MIN EFF. EMBED. hef INCH	MIN HOLE DEPTH ho INCH	MIN BASE TH. ha INCH	MIN EDGE Cmin INCH	MIN SPACING Smin INCH	TORQUE REQ'D FT-LBS
38A TO 38L	1330	3/8	3/8	2	2 3/4	4	4 1/2	6	30
38A TO 38L	1330	3/8	1/2	2	2 3/4	4	4 1/2	6	50
50A TO 50L	1330	1/2							
63A TO 63L	1330	5/8							
38A TO 38N	2230	3/8	1/2	3 1/4	4 1/4	5 1/2	6	9 3/4	50
50A TO 50N	2230	1/2							
63A TO 63N	2230	5/8							
50A TO 50P	2760	1/2	5/8	3 1/4	4 1/4	5 1/2	6	9 3/4	40
63A TO 63P	2760	5/8							
75A TO 75P	2760	3/4							
50A TO 50P	3050	1/2	5/8	4	4 3/4	6	12	12	40
63A TO 63P	3050	5/8							
75A TO 75P	3050	3/4							
63A TO 63P	3420	5/8	3/4	3 3/4	4 3/4	6	12	11 1/4	110
75A TO 75P	3420	3/4							
88A TO 88P	3420	7/8							
63A TO 63Q	3900	5/8	3/4	4 3/4	5 3/4	8	12	14 1/4	110
75A TO 75Q	3900	3/4							
88A TO 88Q	3900	7/8							

SEE DETAIL M0.00 FOR SECTION NOTES

[1] ALLOWABLE LOADS HAVE BEEN INCREASED BY A FACTOR OF 1.2 FOR LOAD COMBINATIONS INCLUDING OVERSTRENGTH, Ω_0, PER ASCE 7-10 SEC. 12.4.3.3 OR ASCE 7-16 SEC. 2.4.5.

[2] FOR SLWC SLAB AND BEAM, REDUCE ALLOWABLE VERTICAL LOAD BY MULTIPLYING ALLOWABLE LOAD BY A FACTOR OF 0.68.

REVIEWED FOR CODE COMPLIANCE
HCAi
OPM-0043
BY: William Staehlin
DATE: 01/23/2023
CALIFORNIA BUILDING CODE, 2022

MASON WEST
1601 E. Miraloma Ave. Placentia, CA 92870
TEL (714) 630 - 0701, www.masonwest.com

Jiefu "Jeff" Zhang, SE
California SE No. S5270

PAGE
M1.130

HANGER ATTACHMENT
TO CONCRETE SLAB AND BEAM
WITH (2) HILTI KB-TZ2 CARBON STEEL CONCRETE ANCHORS

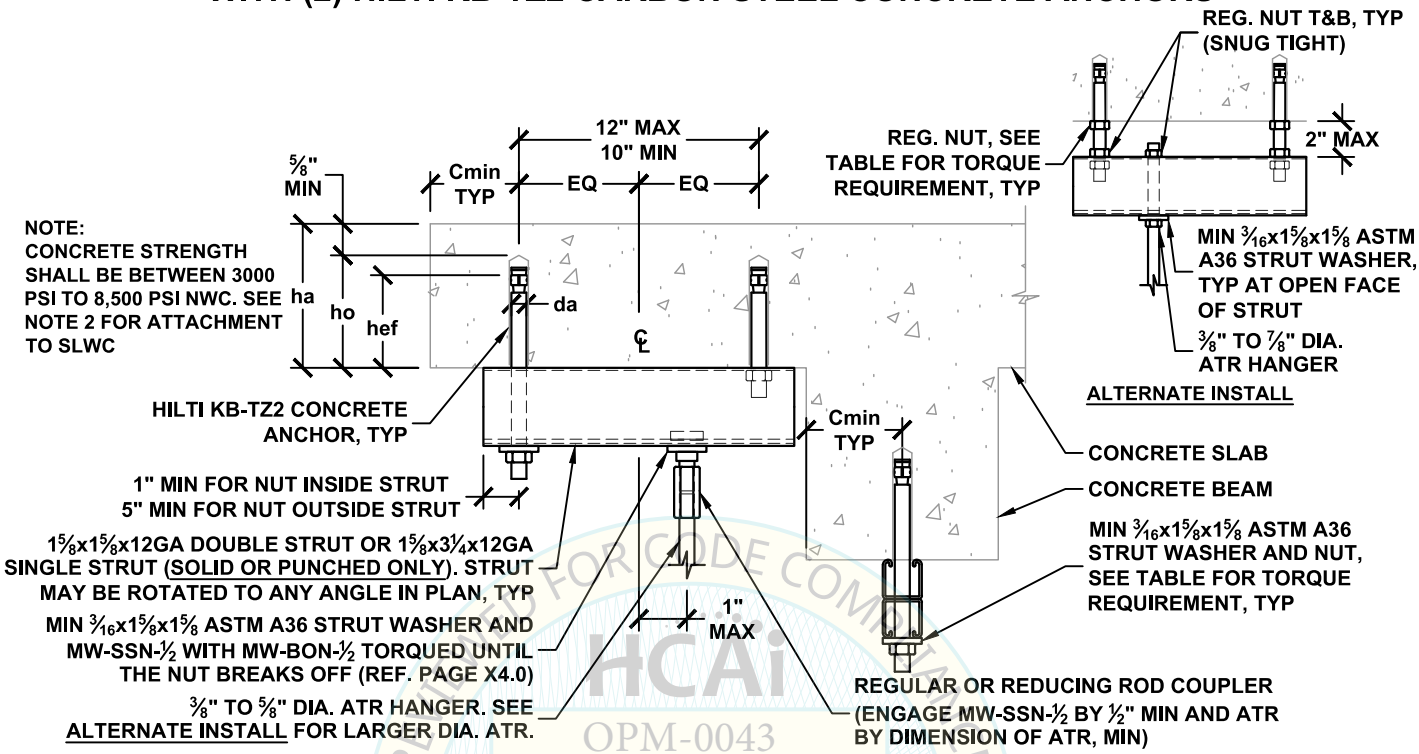

HANGER ATTACHMENT TYPE	STEEL COMPONENT ALLOWABLE VERTICAL LOAD Ta LBS	HANGER ATTACHMENT TYPE	CONCRETE ANCHOR ALLOWABLE VERTICAL LOAD Tac [1,2] LBS	ATR HANGER DIA. INCH	HILTI KB-TZ2 CONCRETE ANCHOR (ICC ESR-4266) SPECIAL INSPECTION REQ'D						
					DIA. da INCH	MIN EFF. EMBED. hef INCH	MIN HOLE DEPTH ho INCH	MIN BASE TH. ha INCH	MIN EDGE Cmin INCH	MIN SPACING Smin INCH	TORQUE REQ'D FT-LBS
38A TO 38N	2400	38A TO 38N	2220	3/8	1/2	2	2 3/4	4	4 1/2	6	50
50A TO 50P	2620	50A TO 50N	2220	1/2							
63A TO 63P	2620	63A TO 63N	2220	5/8							
75A TO 75P	2620	75A TO 75N	2220	3/4							
88A TO 88P	2620	88A TO 88N	2220	7/8							
38A TO 38N	2400	38A TO 38Q	4600	3/8	5/8	3 1/4	4 1/4	5 1/2	6	9 3/4	40
50A TO 50P	2620	50A TO 50Q	4600	1/2							
63A TO 63P	2620	63A TO 63Q	4600	5/8							
75A TO 75P	2620	75A TO 75Q	4600	3/4							
88A TO 88P	2620	88A TO 88Q	4600	7/8							

SEE DETAIL M0.00 FOR SECTION NOTES

[1] ALLOWABLE LOADS HAVE BEEN INCREASED BY A FACTOR OF 1.2 FOR LOAD COMBINATIONS INCLUDING OVERSTRENGTH, Ω_0, PER ASCE 7-10 SEC. 12.4.3.3 OR ASCE 7-16 SEC. 2.4.5.

[2] FOR SLWC SLAB AND BEAM, REDUCE CONCRETE ANCHOR ALLOWABLE VERTICAL LOAD BY MULTIPLYING ALLOWABLE LOAD BY A FACTOR OF 0.68.

[3] ATR HANGER PERMITTED FOR COMPRESSION AND TENSION LOADING CONDITIONS ONLY. NO SHEAR LOADING.

MASON WEST
1601 E. Miraloma Ave. Placentia, CA 92870
TEL (714) 630 - 0701, www.masonwest.com

Jiefu "Jeff" Zhang, SE
California SE No. S5270

PAGE
M1.131

REVIEWED FOR CODE COMPLIANCE
HCAi
OPM-0043
BY: William Staehlin
01/23/2023
CALIFORNIA BUILDING CODE

HANGER ATTACHMENT
TO CONCRETE SLAB AND BEAM
WITH (2) HILTI KB-TZ2 CARBON STEEL CONCRETE ANCHORS

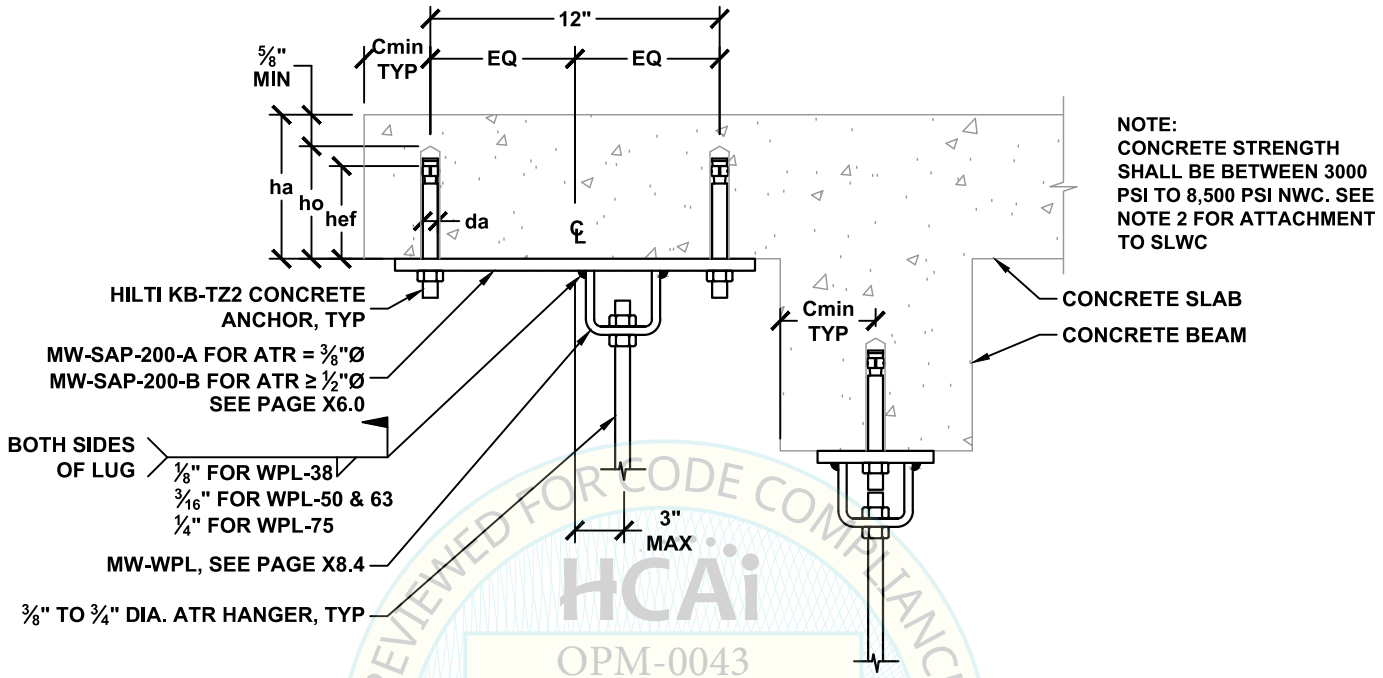

HANGER ATTACHMENT TYPE	STEEL COMPONENT ALLOWABLE VERTICAL LOAD Ta LBS	HANGER ATTACHMENT TYPE	CONCRETE ANCHOR ALLOWABLE VERTICAL LOAD Tac [1,2] LBS	ATR HANGER DIA. INCH	HILTI KB-TZ2 CONCRETE ANCHOR (ICC ESR-4266) SPECIAL INSPECTION REQ'D						
					DIA. da INCH	MIN EFF. EMBED. hef INCH	MIN HOLE DEPTH ho INCH	MIN BASE TH. ha INCH	MIN EDGE Cmin INCH	MIN SPACING Smin INCH	TORQUE REQ'D FT-LBS
38A TO 38H	720	38A TO 38Q	3680	⅜	⅝	3¼	4¼	5½	6	9¾	40
50A TO 50L	1320	50A TO 50Q	3680	½							
63A TO 63M	1930	63A TO 63Q	3680	⅝							
75A TO 75M	1930	75A TO 75Q	3680	¾							
38A TO 38H	720	38A TO 38Q	4070	⅜	⅝	4	4¾	6	12	12	40
50A TO 50L	1320	50A TO 50Q	4070	½							
63A TO 63M	1930	63A TO 63Q	4070	⅝							
75A TO 75M	1930	75A TO 75Q	4070	¾							

SEE DETAIL M0.00 FOR SECTION NOTES

[1] ALLOWABLE LOADS HAVE BEEN INCREASED BY A FACTOR OF 1.2 FOR LOAD COMBINATIONS INCLUDING OVERSTRENGTH, Ω_0, PER ASCE 7-10 SEC. 12.4.3.3 OR ASCE 7-16 SEC. 2.4.5.

[2] FOR SLWC SLAB AND BEAM, REDUCE CONCRETE ANCHOR ALLOWABLE VERTICAL LOAD BY MULTIPLYING ALLOWABLE LOAD BY A FACTOR OF 0.68.

REVIEWED FOR CODE COMPLIANCE
HCAi
OPM-0043
BY: William Staehlin
DATE: 01/23/2023
CALIFORNIA BUILDING CODE, 2022

MASON WEST
1601 E. Miraloma Ave. Placentia, CA 92870
TEL (714) 630 - 0701, www.masonwest.com

Jiefu "Jeff" Zhang, SE
California SE No. S5270

PAGE
M1.132

HANGER ATTACHMENT
TO CONCRETE SLAB AND BEAM
WITH (4) HILTI KB-TZ2 CARBON STEEL CONCRETE ANCHORS

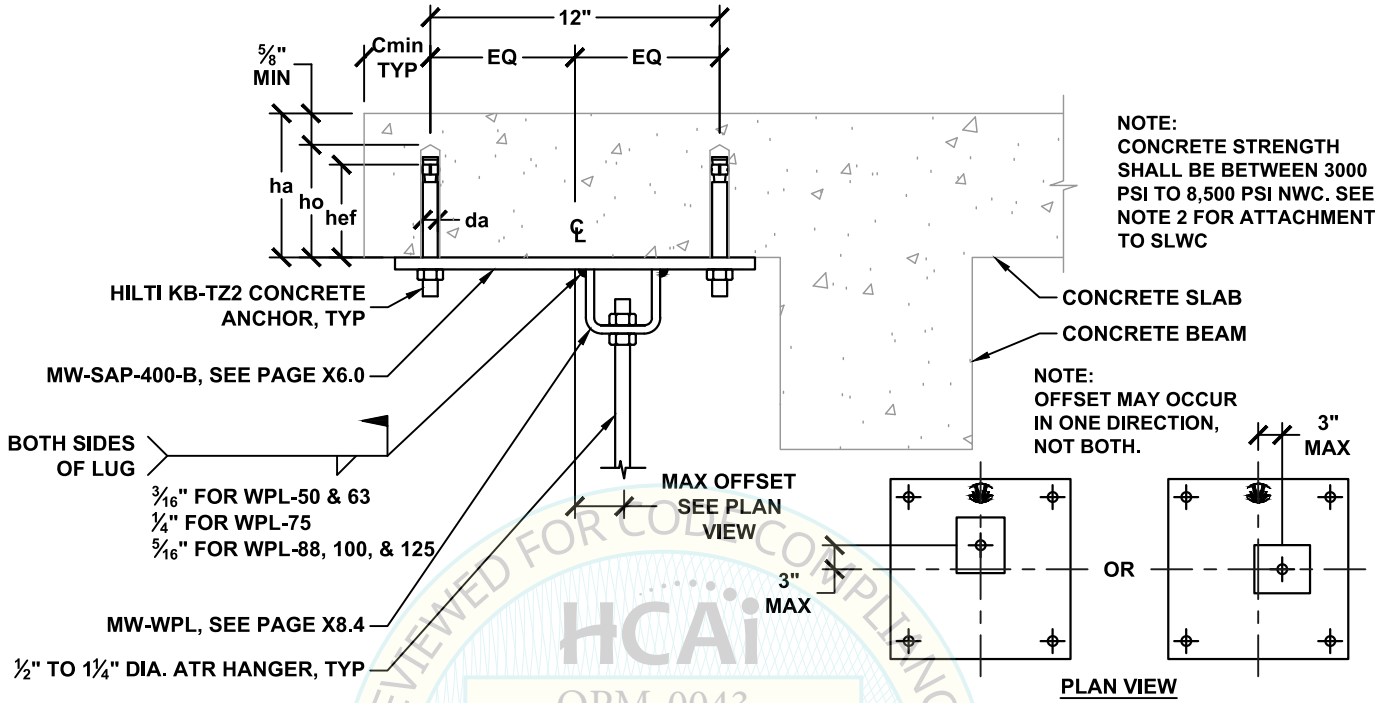

HANGER ATTACHMENT TYPE	STEEL COMPONENT ALLOWABLE VERTICAL LOAD Ta LBS	HANGER ATTACHMENT TYPE	CONCRETE ANCHOR ALLOWABLE VERTICAL LOAD Tac [1,2] LBS	ATR HANGER DIA. INCH	HILTI KB-TZ2 CONCRETE ANCHOR (ICC ESR-4266) SPECIAL INSPECTION REQ'D						
					DIA. da INCH	MIN EFF. EMBED. hef INCH	MIN HOLE DEPTH ho INCH	MIN BASE TH. ha INCH	MIN EDGE Cmin INCH	MIN SPACING Smin INCH	TORQUE REQ'D FT-LBS
50A TO 50L	1320	50A TO 50R	7360	½	⅝	3¼	4¼	5½	6	9¾	40
63A TO 63P	2880	63A TO 63R	7360	⅝							
75A TO 75Q	3600	75A TO 75R	7360	¾							
88A TO 88Q	3600	88A TO 88R	7360	⅞							
100A TO 100Q	3600	100A TO 100R	7360	1							
125A TO 125Q	3600	125A TO 125R	7360	1¼							
50A TO 50L	1320	50A TO 50S	8130	½	⅝	4	4¾	6	12	12	40
63A TO 63P	2880	63A TO 63S	8130	⅝							
75A TO 75Q	3600	75A TO 75S	8130	¾							
88A TO 88Q	3600	88A TO 88S	8130	⅞							
100A TO 100Q	3600	100A TO 100S	8130	1							
125A TO 125Q	3600	125A TO 125S	8130	1¼							

SEE DETAIL M0.00 FOR SECTION NOTES

[1] ALLOWABLE LOADS HAVE BEEN INCREASED BY A FACTOR OF 1.2 FOR LOAD COMBINATIONS INCLUDING OVERSTRENGTH, Ω_0, PER ASCE 7-10 SEC. 12.4.3.3 OR ASCE 7-16 SEC. 2.4.5.

[2] FOR SLWC SLAB AND BEAM, REDUCE CONCRETE ANCHOR ALLOWABLE VERTICAL LOAD BY MULTIPLYING ALLOWABLE LOAD BY A FACTOR OF 0.68.

MASON WEST
1601 E. Miraloma Ave. Placentia, CA 92870
TEL (714) 630 - 0701, www.masonwest.com

Jiefu "Jeff" Zhang, SE
California SE No. S5270

PAGE
M1.133

HCAi
OPM-0043
Reviewed by William Staehlin
DATE: 1/23/2023
REVIEWED FOR CODE COMPLIANCE
CALIFORNIA BUILDING CODE, 2022

HANGER ATTACHMENT
TO CONCRETE FILLED METAL DECK
WITH (1) DEWALT/POWERS POWER-STUD+ SD1 CONCRETE ANCHOR

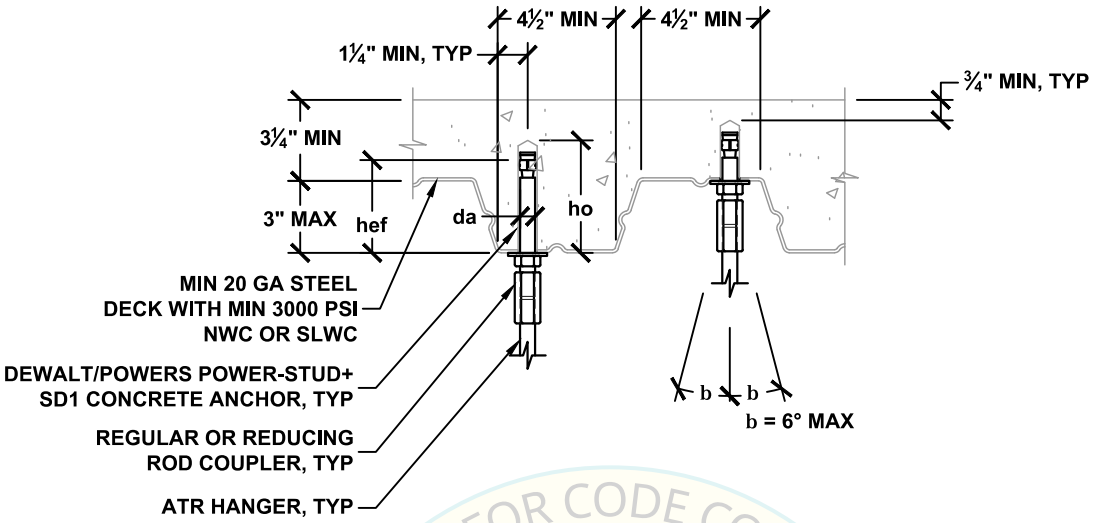

REVIEWED FOR CODE COMPLIANCE
HCAi
OPM-0043
BY: William Staehlin
DATE: 01/23/2023
CALIFORNIA BUILDING CODE, 2022

HANGER ATTACHMENT TYPE	ALLOWABLE VERTICAL LOAD Ta [1] LBS	MIN ATR HANGER DIA. INCH	DEWALT/POWERS POWER-STUD+ SD1 CONCRETE ANCHOR (ICC ESR-2818) SPECIAL INSPECTION REQ'D					
			DIA. da INCH	MIN EFF. EMBED hef INCH	MIN HOLE DEPTH ho INCH	MIN SPACING Smin INCH	MIN END DIST. Cmin INCH	TORQUE REQ'D FT-LBS
38A TO 38F	560	⅜	⅜	2	2⅝	6¾	3⅜	20
38A TO 38J	980	⅜	½	2	2¾	6¾	3⅜	40
50A TO 50J	980	½						
63A TO 63J	980	⅝						
50A TO 50H	810	½	⅝	2¾	3¾	8¼	4⅛	80
63A TO 63H	810	⅝						
75A TO 75H	810	¾						
63A TO 63K	1160	⅝	¾	3⅛	4¼	9⅜	4¾	110
75A TO 75K	1160	¾						
88A TO 88K	1160	⅞						

SEE DETAIL M0.00 FOR SECTION NOTES

[1] ALLOWABLE LOADS HAVE BEEN INCREASED BY A FACTOR OF 1.2 FOR LOAD COMBINATIONS INCLUDING OVERSTRENGTH, Ω_0, PER ASCE 7-10 SEC. 12.4.3.3.

MASON WEST
1601 E. Miraloma Ave. Placentia, CA 92870
TEL (714) 630 - 0701, www.masonwest.com

Jiefu "Jeff" Zhang, SE
California SE No. S5270

PAGE
M2.30

HANGER ATTACHMENT
TO CONCRETE FILLED METAL DECK
WITH (2) DEWALT/POWERS POWER-STUD+ SD1 CONCRETE ANCHORS

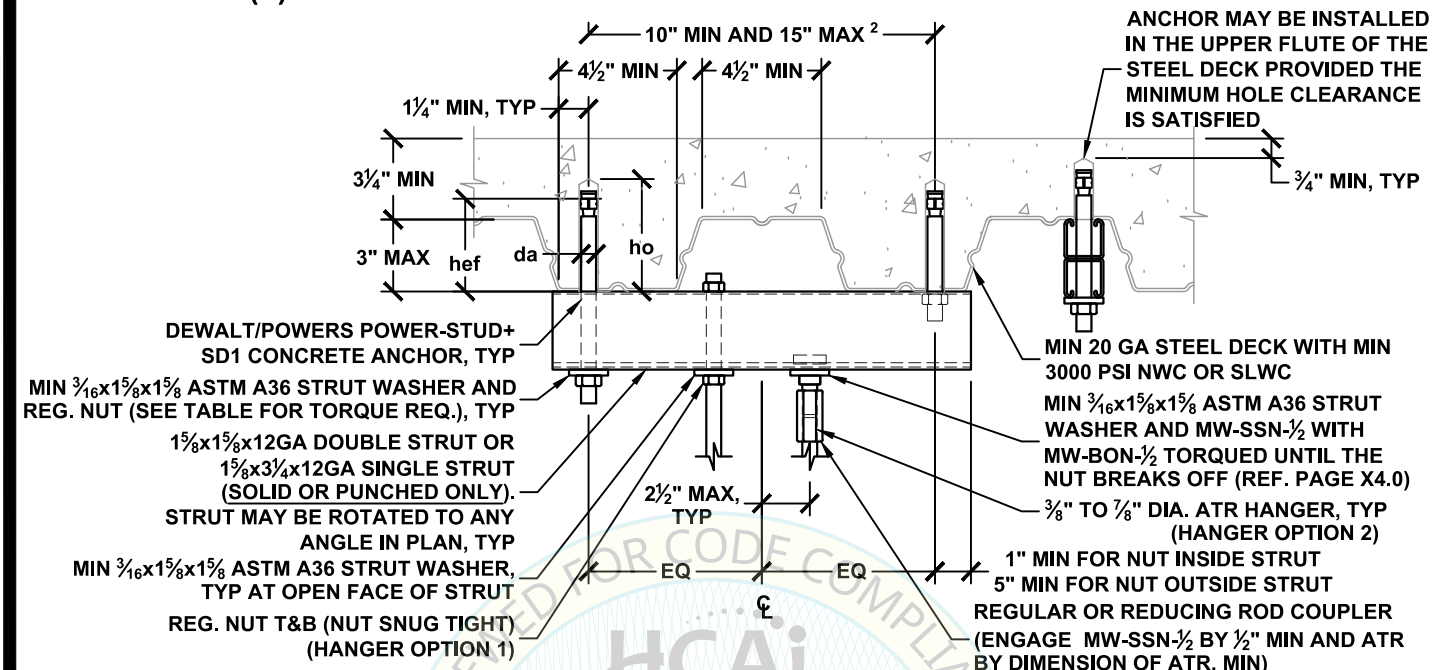

HANGER ATTACHMENT TYPE	STEEL COMPONENT ALLOWABLE VERTICAL LOAD Ta LBS	HANGER ATTACHMENT TYPE	CONCRETE ANCHOR ALLOWABLE VERTICAL LOAD Tac [1] LBS	ATR HANGER DIA. INCH	DEWALT/POWERS POWER-STUD+ SD1 CONCRETE ANCHOR (ICC ESR-2818) SPECIAL INSPECTION REQ'D					
					DIA. da INCH	MIN EFF. EMBED. hef INCH	MIN HOLE DEPTH ho INCH	MIN SPACING Smin INCH	MIN END DIST. Cmin INCH	TORQUE REQ'D FT-LBS
38A TO 38N	2400	38A TO 38H	750	⅜	⅜	2	2⅝	6¾	3⅜	20
50A TO 50P	2620	50A TO 50H	750	½						
63A TO 63P	2620	63A TO 63H	750	⅝						
75A TO 75P	2620	75A TO 75H	750	¾						
88A TO 88P	2620	88A TO 88H	750	⅞						
38A TO 38N	2400	50A TO 50L	1310	⅜	½	2	2¾	6¾	3⅜	40
50A TO 50P	2620	50A TO 50L	1310	½						
63A TO 63P	2620	63A TO 63L	1310	⅝						
75A TO 75P	2620	75A TO 75L	1310	¾						
88A TO 88P	2620	88A TO 88L	1310	⅞						
38A TO 38N	2400	50A TO 50K	1080	⅜	⅝	2¾	3¾	8¼	4⅛	80
50A TO 50P	2620	50A TO 50K	1080	½						
63A TO 63P	2620	63A TO 63K	1080	⅝						
75A TO 75P	2620	75A TO 75K	1080	¾						
88A TO 88P	2620	88A TO 88K	1080	⅞						

SEE DETAIL M0.00 FOR SECTION NOTES

[1] ALLOWABLE LOADS HAVE BEEN INCREASED BY A FACTOR OF 1.2 FOR LOAD COMBINATIONS INCLUDING OVERSTRENGTH, Ω_0, PER ASCE 7-10 SEC. 12.4.3.3.

[2] WHEN THE BOLT CENTERLINE DISTANCE EXCEEDS 14", THE STRUT MUST BE ROTATED TO COMPLY TO THE DETAIL.

HCAi
OPM-0043
BY: William Staehlin
DATE: 01/23/2023
REVIEWED FOR CODE COMPLIANCE
CBC 2022 CALIFORNIA BUILDING CODE

MASON WEST
1601 E. Miraloma Ave. Placentia, CA 92870
TEL (714) 630 - 0701, www.masonwest.com

Jiefu "Jeff" Zhang, SE
California SE No. S5270

PAGE
M2.31

HANGER ATTACHMENT
TO CONCRETE FILLED METAL DECK
WITH (2) DEWALT/POWERS POWER-STUD+ SD1 CONCRETE ANCHORS

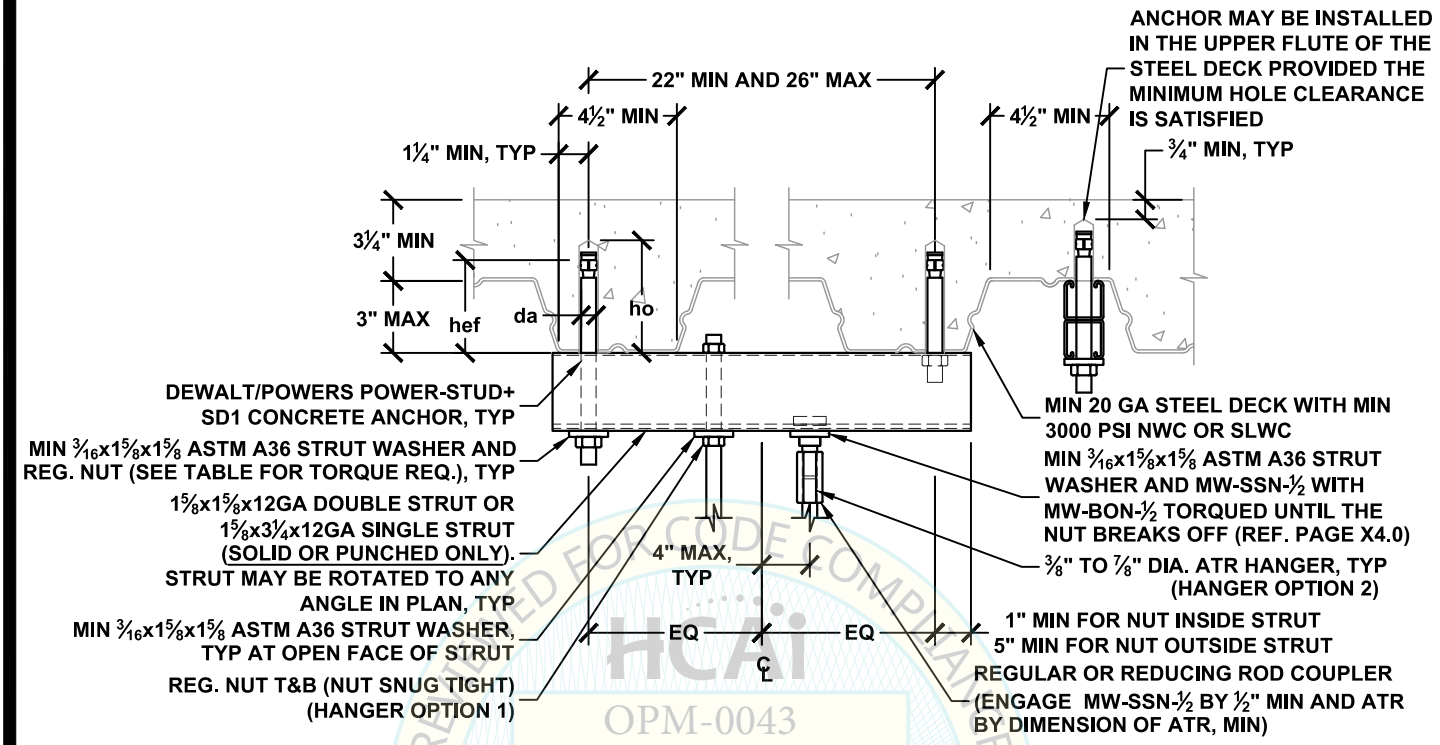

HANGER ATTACHMENT TYPE	STEEL COMPONENT ALLOWABLE VERTICAL LOAD Ta LBS	HANGER ATTACHMENT TYPE	CONCRETE ANCHOR ALLOWABLE VERTICAL LOAD Tac [1] LBS	ATR HANGER DIA. INCH	DEWALT/POWERS POWER-STUD+ SD1 CONCRETE ANCHOR (ICC ESR-2818) SPECIAL INSPECTION REQ'D					
					DIA. da INCH	MIN EFF. EMBED. hef INCH	MIN HOLE DEPTH ho INCH	MIN SPACING Smin INCH	MIN END DIST. Cmin INCH	TORQUE REQ'D FT-LBS
38A TO 38M	1860	38A TO 38H	820	⅜	⅜	2	2⅝	6¾	3⅜	20
50A TO 50M	1860	50A TO 50H	820	½						
63A TO 63M	1860	63A TO 63H	820	⅝						
75A TO 75M	1860	75A TO 75H	820	¾						
88A TO 88M	1860	88A TO 88H	820	⅞						
38A TO 38M	1860	38A TO 38L	1440	⅜	½	2	2¾	6¾	3⅜	40
50A TO 50M	1860	50A TO 50L	1440	½						
63A TO 63M	1860	63A TO 63L	1440	⅝						
75A TO 75M	1860	75A TO 75L	1440	¾						
88A TO 88M	1860	88A TO 88L	1440	⅞						

SEE DETAIL M0.00 FOR SECTION NOTES

[1] ALLOWABLE LOADS HAVE BEEN INCREASED BY A FACTOR OF 1.2 FOR LOAD COMBINATIONS INCLUDING OVERSTRENGTH, Ω_0, PER ASCE 7-10 SEC. 12.4.3.3.

HCAi
OPM-0043
BY: William Staehlin
DATE: 1/23/2023
REVIEWED FOR CODE COMPLIANCE
CALIFORNIA BUILDING CODE (CBC)

MASON WEST
1601 E. Miraloma Ave. Placentia, CA 92870
TEL (714) 630 - 0701, www.masonwest.com

Jiefu "Jeff" Zhang, SE
California SE No. S5270

PAGE
M2.31.1

HANGER ATTACHMENT
TO CONCRETE FILLED METAL DECK
WITH (2) DEWALT/POWERS POWER-STUD+ SD1 CONCRETE ANCHORS

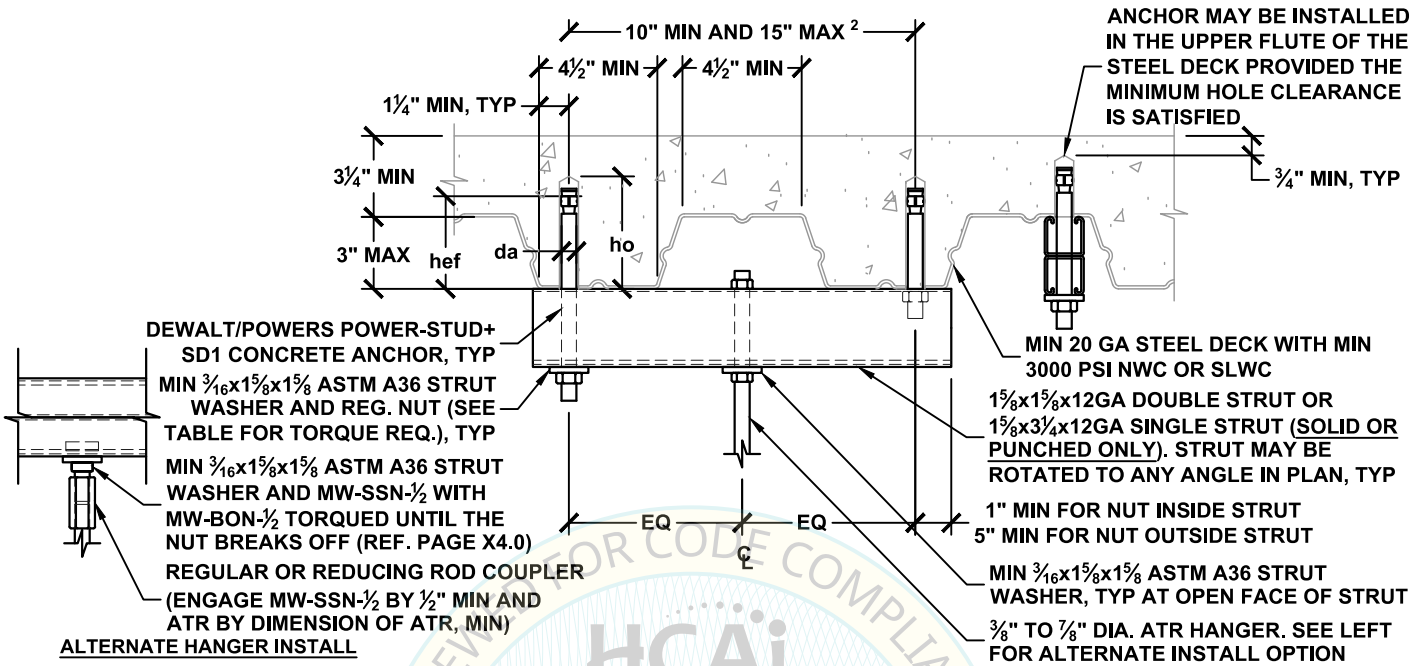

HANGER ATTACHMENT TYPE	STEEL COMPONENT ALLOWABLE VERTICAL LOAD Ta LBS	HANGER ATTACHMENT TYPE	CONCRETE ANCHOR ALLOWABLE VERTICAL LOAD Tac [1] LBS	ATR HANGER DIA. INCH	DEWALT/POWERS POWER-STUD+ SD1 CONCRETE ANCHOR (ICC ESR-2818) SPECIAL INSPECTION REQ'D					
					DIA. da INCH	MIN EFF. EMBED. hef INCH	MIN HOLE DEPTH ho INCH	MIN SPACING Smin INCH	MIN END DIST. Cmin INCH	TORQUE REQ'D FT-LBS
38A TO 38N	2400	38A TO 38K	1120	⅜	⅜	2	2⅝	6¾	3⅜	20
50A TO 50P	2620	50A TO 50K	1120	½						
63A TO 63P	2620	63A TO 63K	1120	⅝						
75A TO 75P	2620	75A TO 75K	1120	¾						
88A TO 88P	2620	88A TO 88K	1120	⅞						
38A TO 38N	2400	38A TO 38M	1960	⅜	½	2	2¾	6¾	3⅜	40
50A TO 50P	2620	50A TO 50M	1960	½						
63A TO 63P	2620	63A TO 63M	1960	⅝						
75A TO 75P	2620	75A TO 75M	1960	¾						
88A TO 88P	2620	88A TO 88M	1960	⅞						
38A TO 38N	2400	38A TO 38M	1620	⅜	⅝	2¾	3¾	8¼	4⅛	80
50A TO 50P	2620	50A TO 50M	1620	½						
63A TO 63P	2620	63A TO 63M	1620	⅝						
75A TO 75P	2620	75A TO 75M	1620	¾						
88A TO 88P	2620	88A TO 88M	1620	⅞						

SEE DETAIL M0.00 FOR SECTION NOTES

[1] ALLOWABLE LOADS HAVE BEEN INCREASED BY A FACTOR OF 1.2 FOR LOAD COMBINATIONS INCLUDING OVERSTRENGTH, Ω_0, PER ASCE 7-10 SEC. 12.4.3.3.

[2] WHEN THE BOLT CENTERLINE DISTANCE EXCEEDS 14", THE STRUT MUST BE ROTATED TO COMPLY TO THE DETAIL.

HCAi
OPM-0043
BY: William Staehlin
DATE: 01/23/2023
REVIEWED FOR CODE COMPLIANCE
CBC 2022 BUILDING CODE

MASON WEST
1601 E. Miraloma Ave. Placentia, CA 92870
TEL (714) 630 - 0701, www.masonwest.com

Jiefu "Jeff" Zhang, SE
California SE No. S5270

PAGE
M2.31.2

HANGER ATTACHMENT
TO CONCRETE FILLED METAL DECK
WITH (1) DEWALT/POWERS POWER-STUD+ SD1 CONCRETE ANCHOR

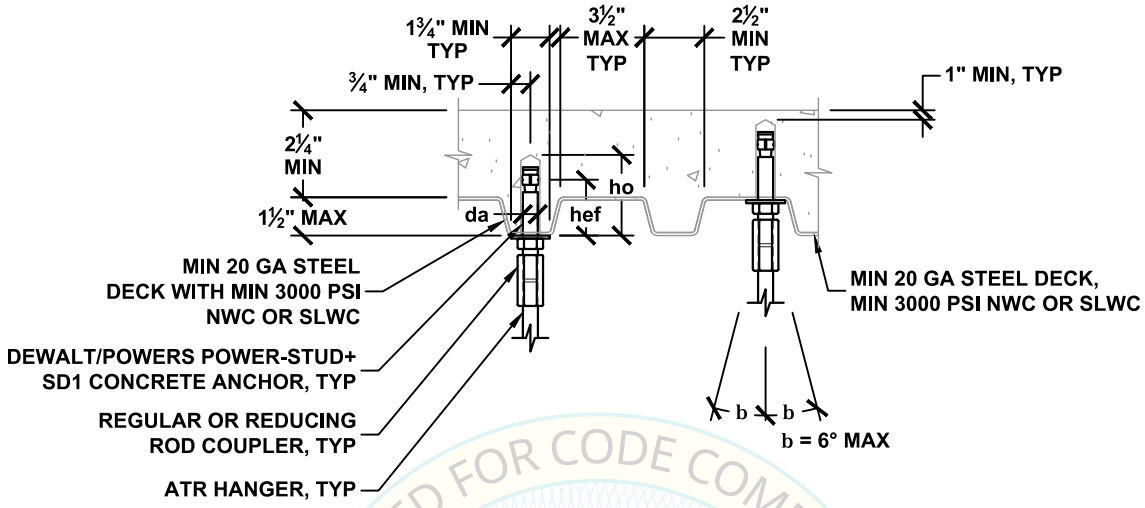

HANGER ATTACHMENT TYPE	ALLOWABLE VERTICAL LOAD Ta [1] LBS	MIN ATR HANGER DIA. INCH	DEWALT/POWERS POWER-STUD+ SD1 CONCRETE ANCHOR (ICC ESR-2818) SPECIAL INSPECTION REQ'D					
			DIA. da INCH	MIN EFF. EMBED hef INCH	MIN HOLE DEPTH ho INCH	MIN SPACING Smin INCH	MIN END DIST. Cmin INCH	TORQUE REQ'D FT-LBS
38A TO 38F	480	3/8	3/8	2	2 5/8	6	3	20
38A TO 38G	580	3/8						
50A TO 50G	580	1/2	1/2	2	2 3/4	6	3	40
63A TO 63G	580	5/8						

SEE DETAIL M0.00 FOR SECTION NOTES

[1] ALLOWABLE LOADS HAVE BEEN INCREASED BY A FACTOR OF 1.2 FOR LOAD COMBINATIONS INCLUDING OVERSTRENGTH, Ω_0, PER ASCE 7-10 SEC. 12.4.3.3.

REVIEWED FOR CODE COMPLIANCE
HCAi
OPM-0043
BY: William Staehlin
DATE: 01/23/2023
CALIFORNIA BUILDING CODE, 2022

MASON WEST
1601 E. Miraloma Ave. Placentia, CA 92870
TEL (714) 630 - 0701, www.masonwest.com

Jiefu "Jeff" Zhang, SE
California SE No. S5270

PAGE
M2.32

HANGER ATTACHMENT
TO CONCRETE FILLED METAL DECK
WITH (2) DEWALT/POWERS POWER-STUD+ SD1 CONCRETE ANCHORS

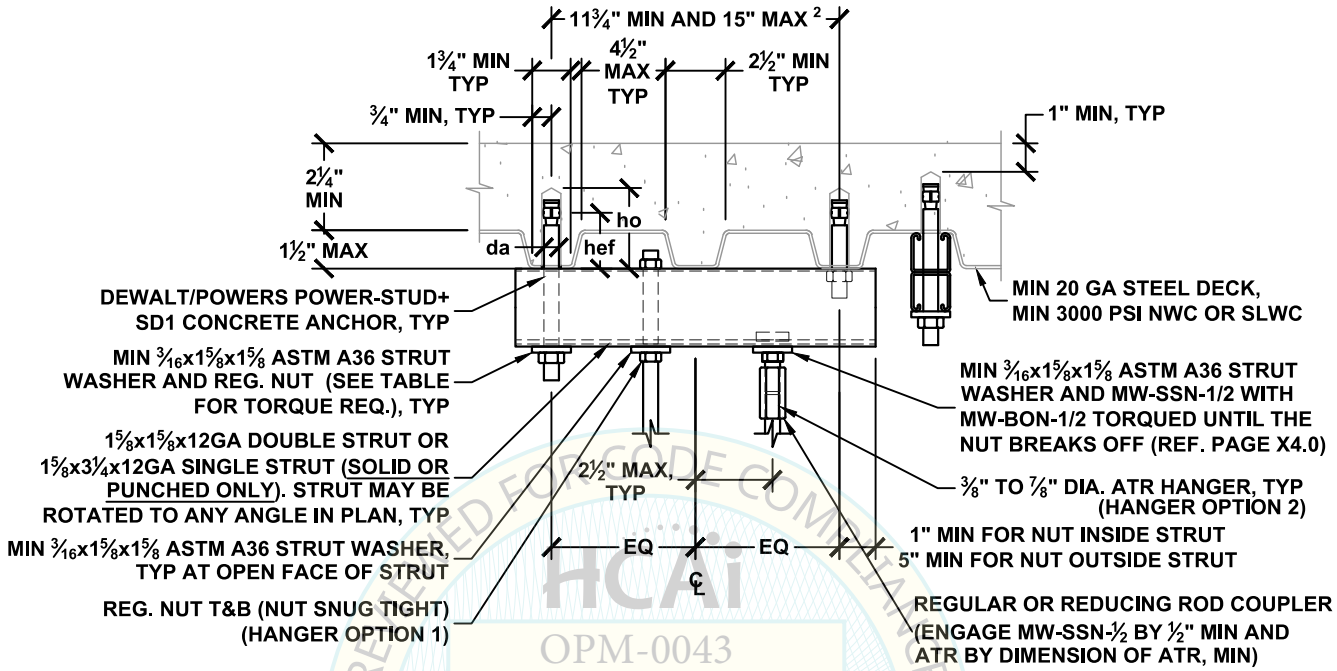

HANGER ATTACHMENT TYPE	STEEL COMPONENT ALLOWABLE VERTICAL LOAD Ta LBS	HANGER ATTACHMENT TYPE	CONCRETE ANCHOR ALLOWABLE VERTICAL LOAD Tac [1] LBS	ATR HANGER DIA. INCH	DEWALT/POWERS POWER-STUD+ SD1 CONCRETE ANCHOR (ICC ESR-2818) SPECIAL INSPECTION REQ'D					
					DIA. da INCH	MIN EFF. EMBED. hef INCH	MIN HOLE DEPTH ho INCH	MIN SPACING Smin INCH	MIN END DIST. Cmin INCH	TORQUE REQ'D FT-LBS
38A TO 38N	2400	38A TO 38G	680	⅜	⅜	2	2⅝	6	3	20
50A TO 50P	2620	50A TO 50G	680	½						
63A TO 63P	2620	63A TO 63G	680	⅝						
75A TO 75P	2620	75A TO 75G	680	¾						
88A TO 88P	2620	88A TO 88G	680	⅞						
38A TO 38N	2400	38A TO 38H	820	⅜	½	2	2¾	6	3	40
50A TO 50P	2620	50A TO 50H	820	½						
63A TO 63P	2620	63A TO 63H	820	⅝						
75A TO 75P	2620	75A TO 75H	820	¾						
88A TO 88P	2620	88A TO 88H	820	⅞						

SEE DETAIL M0.00 FOR SECTION NOTES

[1] ALLOWABLE LOADS HAVE BEEN INCREASED BY A FACTOR OF 1.2 FOR LOAD COMBINATIONS INCLUDING OVERSTRENGTH, Ω_0, PER ASCE 7-10 SEC. 12.4.3.3.

[2] WHEN THE BOLT CENTERLINE DISTANCE EXCEEDS 12¼", THE STRUT MUST BE ROTATED TO COMPLY TO THE DETAIL.

HCAi
OPM-0043
BY: William Staehlin
DATE: 1/23/2023
REVIEWED FOR CODE COMPLIANCE
CALIFORNIA BUILDING CODE 2022

MASON WEST
1601 E. Miraloma Ave. Placentia, CA 92870
TEL (714) 630 - 0701, www.masonwest.com

Jiefu "Jeff" Zhang, SE
California SE No. S5270

PAGE
M2.33

HANGER ATTACHMENT
TO CONCRETE FILLED METAL DECK
WITH (2) DEWALT/POWERS POWER-STUD+ SD1 CONCRETE ANCHORS

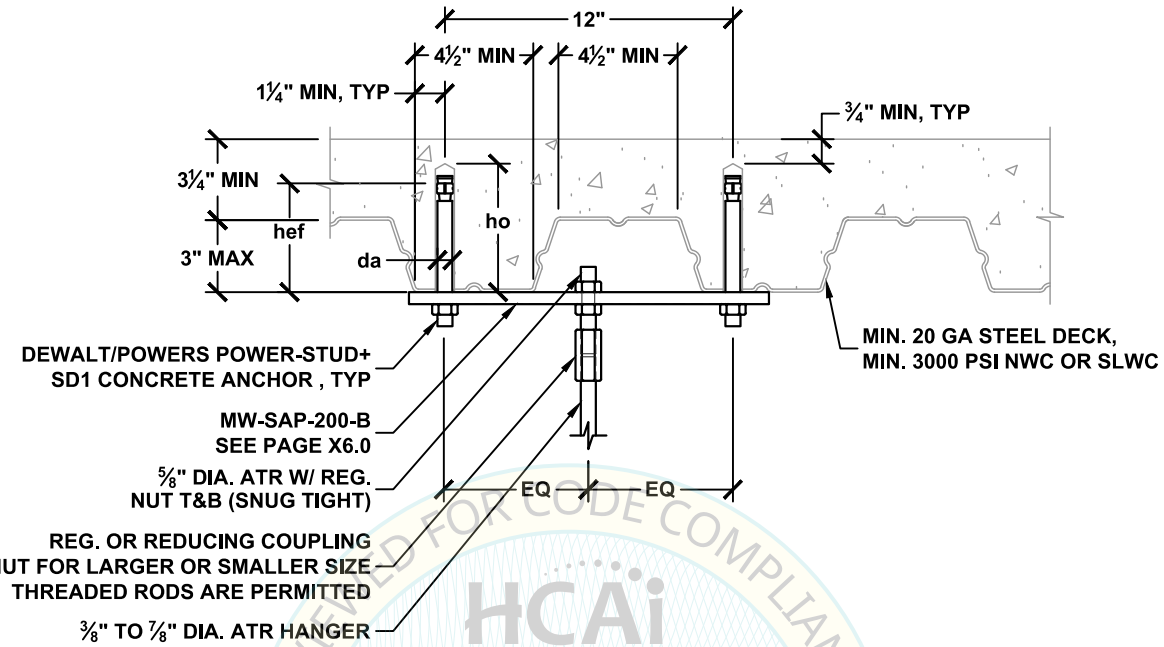

HANGER ATTACHMENT TYPE	STEEL COMPONENT ALLOWABLE VERTICAL LOAD Ta LBS	HANGER ATTACHMENT TYPE	CONCRETE ANCHOR ALLOWABLE VERTICAL LOAD Tac [1] LBS	ATR HANGER DIA. INCH	DEWALT/POWERS POWER-STUD+ SD1 CONCRETE ANCHOR (ICC ESR-2818) SPECIAL INSPECTION REQ'D					
					DIA. da INCH	MIN EFF. EMBED. hef INCH	MIN HOLE DEPTH ho INCH	MIN SPACING Smin INCH	MIN END DIST. Cmin INCH	TORQUE REQ'D FT-LBS
38A TO 38M	1930	38A TO 38M	1620	⅜	⅝	2¾	3¾	8¼	4⅛	80
50A TO 50M	1930	50A TO 50M	1620	½						
63A TO 63M	1930	63A TO 63M	1620	⅝						
75A TO 75M	1930	75A TO 75M	1620	¾						
88A TO 88M	1930	88A TO 88M	1620	⅞						

SEE DETAIL M0.00 FOR SECTION NOTES

[1] ALLOWABLE LOADS HAVE BEEN INCREASED BY A FACTOR OF 1.2 FOR LOAD COMBINATIONS INCLUDING OVERSTRENGTH, Ω_0, PER ASCE 7-10 SEC. 12.4.3.3.

REVIEWED FOR CODE COMPLIANCE
HCAi
OPM-0043
BY: William Staehlin
DATE: 01/23/2023
CBC/CRC/IBC/UBC/NFPA/IRC/IBC/IBC/IB

HANGER ATTACHMENT
TO CONCRETE FILLED METAL DECK
WITH (4) DEWALT/POWERS POWER-STUD+ SD1 CONCRETE ANCHORS

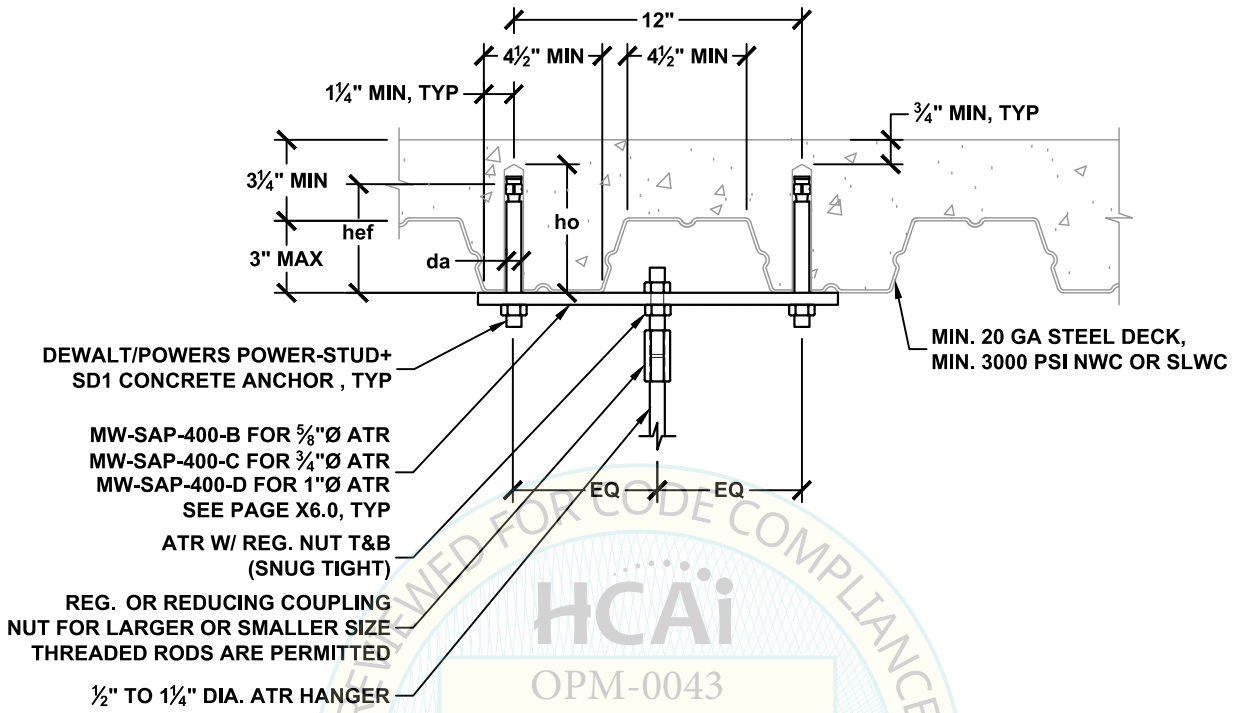

REVIEWED FOR CODE COMPLIANCE
HCAi
OPM-0043
BY: William Staehlin
DATE: 01/23/2023
CALIFORNIA BUILDING CODE

HANGER ATTACHMENT TYPE	STEEL COMPONENT ALLOWABLE VERTICAL LOAD Ta LBS	HANGER ATTACHMENT TYPE	CONCRETE ANCHOR ALLOWABLE VERTICAL LOAD Tac [1] LBS	ATR HANGER DIA. INCH	DEWALT/POWERS POWER-STUD+ SD1 CONCRETE ANCHOR (ICC ESR-2818) SPECIAL INSPECTION REQ'D					
					DIA. da INCH	MIN EFF. EMBED. hef INCH	MIN HOLE DEPTH ho INCH	MIN SPACING Smin INCH	MIN END DIST. Cmin INCH	TORQUE REQ'D FT-LBS
50A TO 50Q	3600	50A TO 50P	3240	½	⅝	2¾	3¾	8¼	4⅛	80
63A TO 63Q	3600	63A TO 63P	3240	⅝						
75A TO 75Q	3500	75A TO 75P	3240	¾						
88A TO 88Q	3500	88A TO 88P	3240	⅞						
100A TO 100Q	3500	100A TO 100P	3240	1						
125A TO 125Q	3500	125A TO 125P	3240	1¼						

SEE DETAIL M0.00 FOR SECTION NOTES

[1] ALLOWABLE LOADS HAVE BEEN INCREASED BY A FACTOR OF 1.2 FOR LOAD COMBINATIONS INCLUDING OVERSTRENGTH, Ω_0, PER ASCE 7-10 SEC. 12.4.3.3.

MASON WEST
1601 E. Miraloma Ave. Placentia, CA 92870
TEL (714) 630 - 0701, www.masonwest.com

Jiefu "Jeff" Zhang, SE
California SE No. S5270

PAGE
M2.35

HANGER ATTACHMENT
TO CONCRETE FILLED METAL DECK
WITH (1) MASON IND. N.Y. SAS(E) CONCRETE ANCHOR

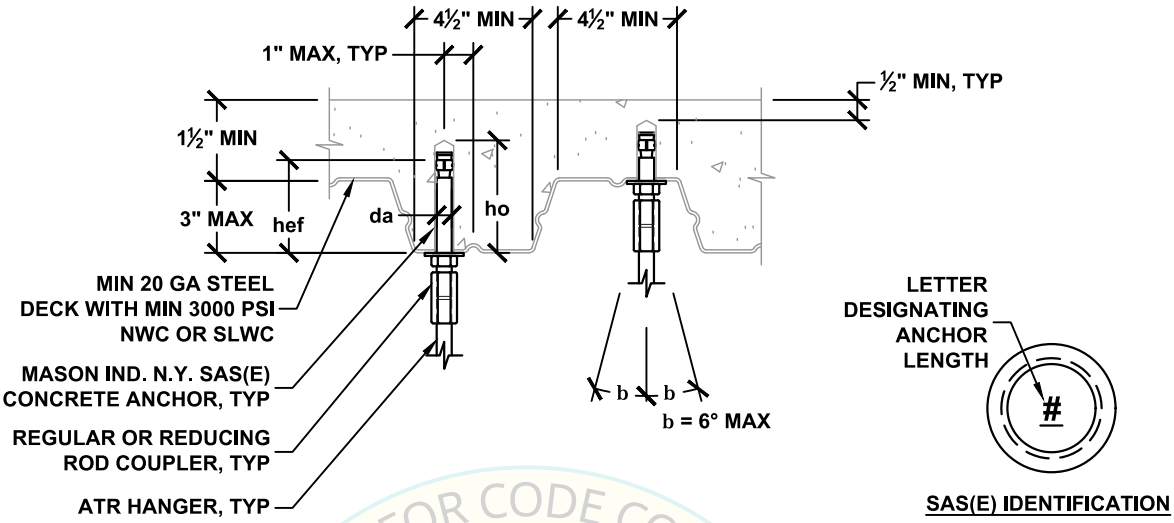

HANGER ATTACHMENT TYPE	ALLOWABLE VERTICAL LOAD Ta [1] LBS	MIN ATR HANGER DIA. INCH	MASON IND. N.Y. SAS(E) CONCRETE ANCHOR (ICC ESR-3037) SPECIAL INSPECTION REQ'D					
			DIA. da INCH	MIN EFF. EMBED hef INCH	MIN HOLE DEPTH ho INCH	MIN SPACING Smin INCH	MIN END DIST. Cmin INCH	TORQUE REQ'D FT-LBS
38A TO 38E	430	3/8	3/8	1 5/8	2 1/8	6 3/4	3 3/8	30
38A TO 38K	1070	3/8	3/8	3	3 1/2	9	4 1/2	30
38A TO 38H	840	3/8	½	2 1/4	3	6 3/4	3 3/8	60
50A TO 50H	840	½						
63A TO 63H	840	5/8						
38A TO 38K	1120	3/8	½	4	4 3/4	12	6	60
50A TO 50K	1120	½						
63A TO 63K	1120	5/8						
50A TO 50K	1070	½	5/8	2 3/4	3 5/8	8 1/4	4 1/8	90
63A TO 63K	1070	5/8						
75A TO 75K	1070	3/4						
50A TO 50N	2040	½	5/8	5	5 7/8	15	7 ½	90
63A TO 63N	2040	5/8						
75A TO 75N	2040	3/4						
63A TO 63K	1150	5/8	¾	3 3/8	4 3/8	10 1/8	5 1/8	150
75A TO 75K	1150	3/4						
88A TO 88K	1150	7/8						

SEE DETAIL M0.00 FOR SECTION NOTES

[1] ALLOWABLE LOADS HAVE BEEN INCREASED BY A FACTOR OF 1.2 FOR LOAD COMBINATIONS INCLUDING OVERSTRENGTH, Ω_0, PER ASCE 7-10 SEC. 12.4.3.3.

REVIEWED FOR CODE COMPLIANCE
HCAI
OPM-0043
BY: William Staehlin
DATE: 01/23/2023
CALIFORNIA BUILDING CODE, 2022

MASON WEST
1601 E. Miraloma Ave. Placentia, CA 92870
TEL (714) 630 - 0701, www.masonwest.com

Jiefu "Jeff" Zhang, SE
California SE No. S5270

PAGE
M2.40

HANGER ATTACHMENT
TO CONCRETE FILLED METAL DECK
WITH (2) MASON IND. N.Y. SAS(E) CONCRETE ANCHORS

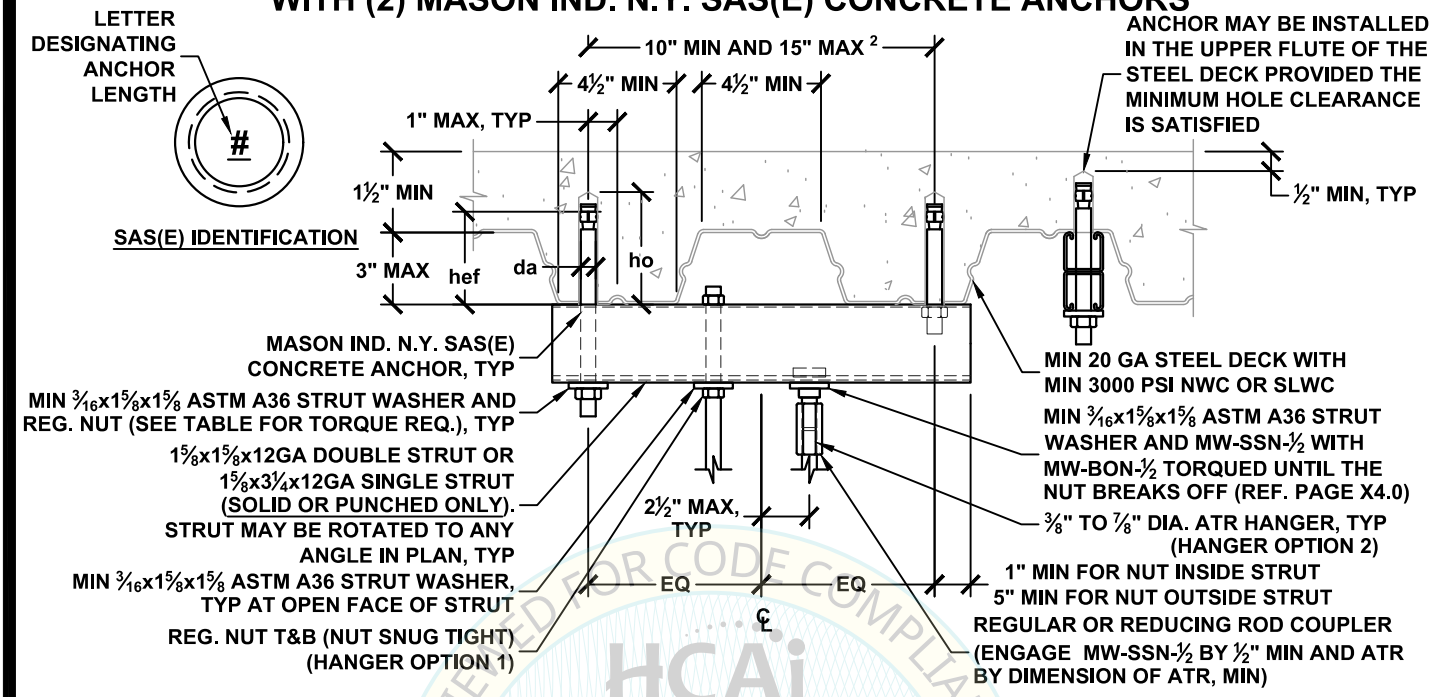

HANGER ATTACHMENT TYPE	STEEL COMPONENT ALLOWABLE VERTICAL LOAD Ta LBS	HANGER ATTACHMENT TYPE	CONCRETE ANCHOR ALLOWABLE VERTICAL LOAD Tac [1] LBS	ATR HANGER DIA. INCH	MASON IND. N.Y. SAS(E) CONCRETE ANCHOR (ICC ESR-3037) SPECIAL INSPECTION REQ'D					
					DIA. da INCH	MIN EFF. EMBED. hef INCH	MIN HOLE DEPTH ho INCH	MIN SPACING Smin INCH	MIN END DIST. Cmin INCH	TORQUE REQ'D FT-LBS
38A TO 38N	2400	38A TO 38L	1430	⅜	⅜	3	3½	9	4½	30
50A TO 50P	2620	50A TO 50L	1430	½						
63A TO 63P	2620	63A TO 63L	1430	⅝						
75A TO 75P	2620	75A TO 75L	1430	¾						
88A TO 88P	2620	88A TO 88L	1430	⅞						
38A TO 38N	2400	38A TO 38L	1490	⅜	½	4	4¾	12	6	60
50A TO 50P	2620	50A TO 50L	1490	½						
63A TO 63P	2620	63A TO 63L	1490	⅝						
75A TO 75P	2620	75A TO 75L	1490	¾						
88A TO 88P	2620	88A TO 88L	1490	⅞						
38A TO 38N	2400	38A TO 38P	2720	⅜	⅝	5	5⅞	15	7½	90
50A TO 50P	2620	50A TO 50P	2720	½						
63A TO 63P	2620	63A TO 63P	2720	⅝						
75A TO 75P	2620	75A TO 75P	2720	¾						
88A TO 88P	2620	88A TO 88P	2720	⅞						

SEE DETAIL M0.00 FOR SECTION NOTES

[1] ALLOWABLE LOADS HAVE BEEN INCREASED BY A FACTOR OF 1.2 FOR LOAD COMBINATIONS INCLUDING OVERSTRENGTH, Ω_0, PER ASCE 7-10 SEC. 12.4.3.3.

[2] WHEN THE BOLT CENTERLINE DISTANCE EXCEEDS 14", THE STRUT MUST BE ROTATED TO COMPLY TO THE DETAIL.

HCAi
OPM-0043
BY: William Staehlin
DATE: 01/23/2023
REVIEWED FOR CODE COMPLIANCE WITH CBC 2022 CALIFORNIA BUILDING CODE

MASON WEST
1601 E. Miraloma Ave. Placentia, CA 92870
TEL (714) 630 - 0701, www.masonwest.com

Jiefu "Jeff" Zhang, SE
California SE No. S5270

PAGE
M2.41

HANGER ATTACHMENT
TO CONCRETE FILLED METAL DECK
WITH (2) MASON IND. N.Y. SAS(E) CONCRETE ANCHORS

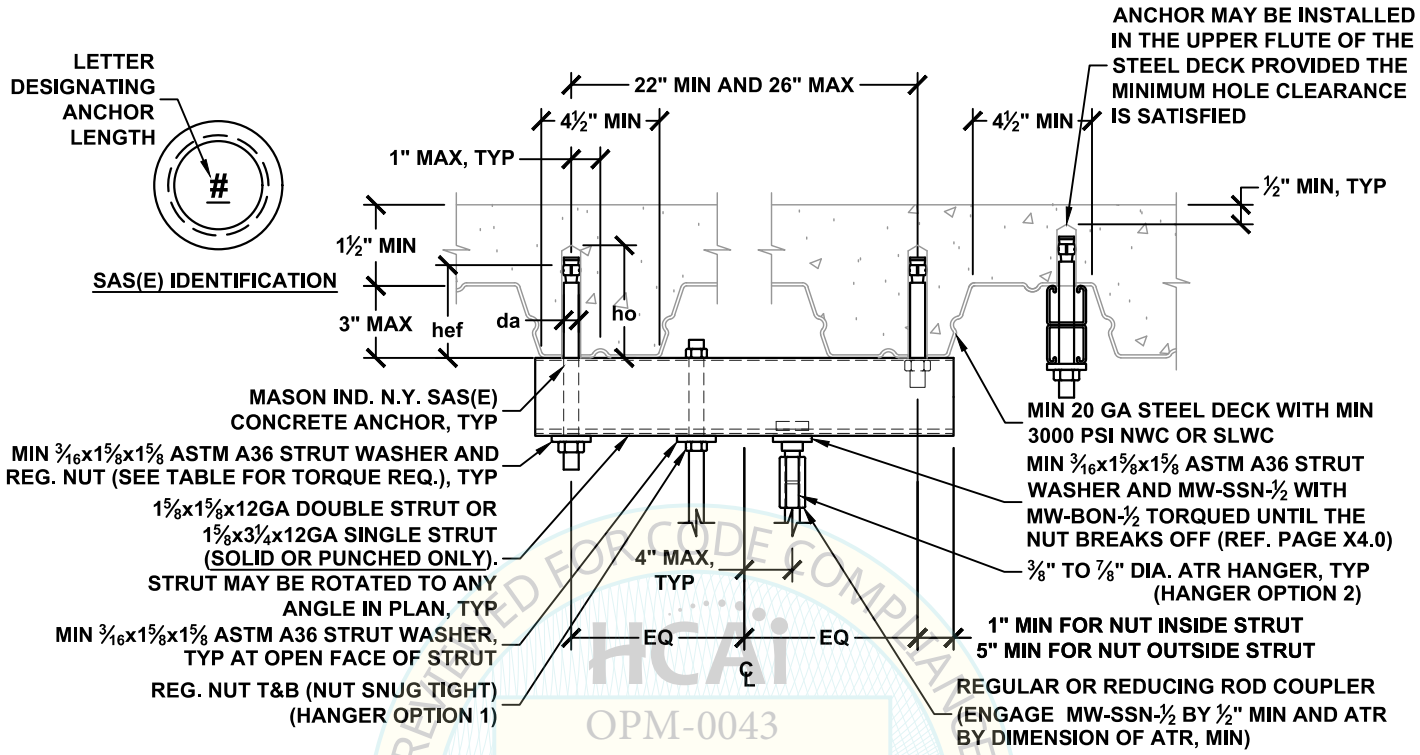

HANGER ATTACHMENT TYPE	STEEL COMPONENT ALLOWABLE VERTICAL LOAD Ta LBS	HANGER ATTACHMENT TYPE	CONCRETE ANCHOR ALLOWABLE VERTICAL LOAD Tac [1] LBS	ATR HANGER DIA. INCH	MASON IND. N.Y. SAS(E) CONCRETE ANCHOR (ICC ESR-3037) SPECIAL INSPECTION REQ'D					
					DIA. da INCH	MIN EFF. EMBED. hef INCH	MIN HOLE DEPTH ho INCH	MIN SPACING Smin INCH	MIN END DIST. Cmin INCH	TORQUE REQ'D FT-LBS
38A TO 38M	1860	38A TO 38L	1570	3/8	3/8	3	3½	9	4½	30
50A TO 50M	1860	50A TO 50L	1570	½						
63A TO 63M	1860	63A TO 63L	1570	5/8						
75A TO 75M	1860	75A TO 75L	1570	3/4						
88A TO 88M	1860	88A TO 88L	1570	7/8						
38A TO 38M	1860	38A TO 38M	1640	3/8	½	4	4¾	12	6	60
50A TO 50M	1860	50A TO 50M	1640	½						
63A TO 63M	1860	63A TO 63M	1640	5/8						
75A TO 75M	1860	75A TO 75M	1640	3/4						
88A TO 88M	1860	88A TO 88M	1640	7/8						

SEE DETAIL M0.00 FOR SECTION NOTES

[1] ALLOWABLE LOADS HAVE BEEN INCREASED BY A FACTOR OF 1.2 FOR LOAD COMBINATIONS INCLUDING OVERSTRENGTH, Ω_0, PER ASCE 7-10 SEC. 12.4.3.3.

REVIEWED FOR CODE COMPLIANCE
HCAi
OPM-0043
BY: William Staehlin
DATE: 1/23/2023
CBC 2019 CALIFORNIA BUILDING CODE, CCR, TITLE 24

MASON WEST
1601 E. Miraloma Ave. Placentia, CA 92870
TEL (714) 630 - 0701, www.masonwest.com

Jiefu "Jeff" Zhang, SE
California SE No. S5270

PAGE
M2.41.1

HANGER ATTACHMENT
TO CONCRETE FILLED METAL DECK
WITH (2) MASON IND. N.Y. SAS(E) CONCRETE ANCHORS

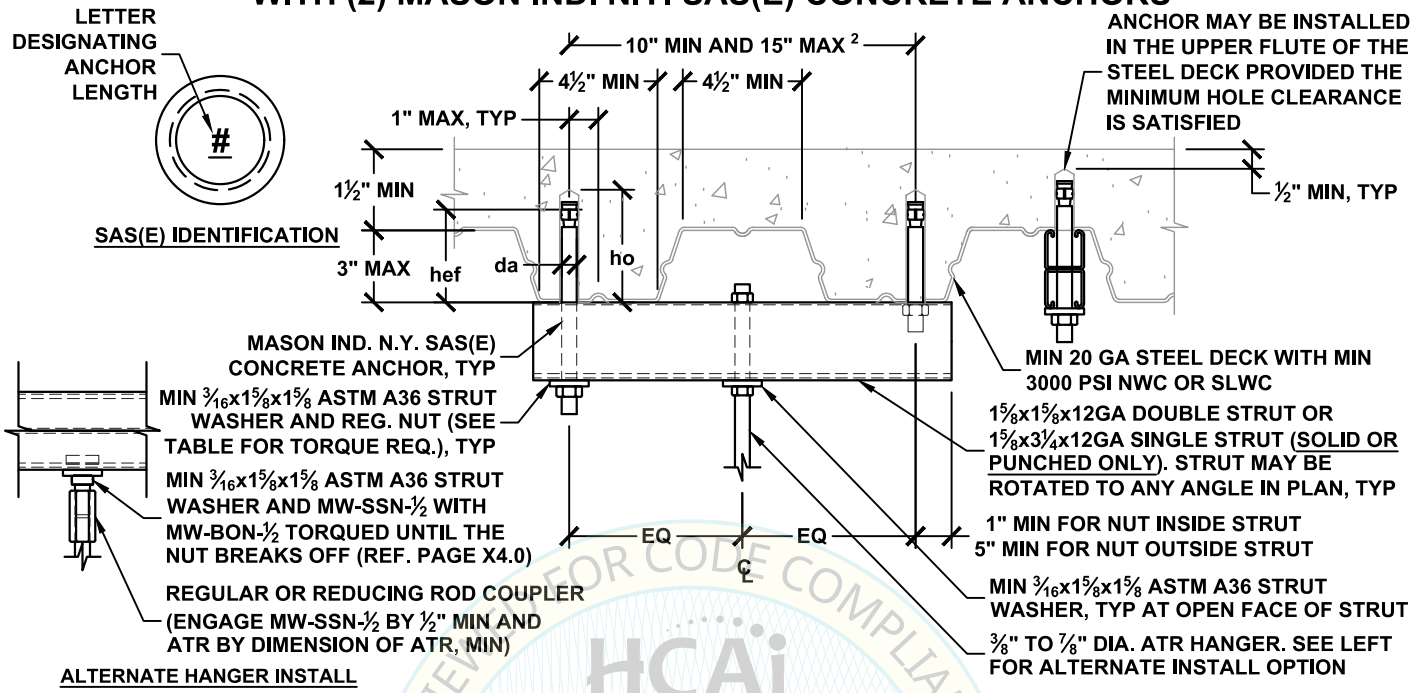

HANGER ATTACHMENT TYPE	STEEL COMPONENT ALLOWABLE VERTICAL LOAD Ta LBS	HANGER ATTACHMENT TYPE	CONCRETE ANCHOR ALLOWABLE VERTICAL LOAD Tac [1] LBS	ATR HANGER DIA. INCH	MASON IND. N.Y. SAS(E) CONCRETE ANCHOR (ICC ESR-3037) SPECIAL INSPECTION REQ'D					
					DIA. da INCH	MIN EFF. EMBED. hef INCH	MIN HOLE DEPTH ho INCH	MIN SPACING Smin INCH	MIN END DIST. Cmin INCH	TORQUE REQ'D FT-LBS
38A TO 38N	2400	38A TO 38N	2140	⅜	⅜	3	3½	9	4½	30
50A TO 50P	2620	50A TO 50N	2140	½						
63A TO 63P	2620	63A TO 63N	2140	⅝						
75A TO 75P	2620	75A TO 75N	2140	¾						
88A TO 88P	2620	88A TO 88N	2140	⅞						
38A TO 38N	2400	38A TO 38N	2240	⅜	½	4	4¾	12	6	60
50A TO 50P	2620	50A TO 50N	2240	½						
63A TO 63P	2620	63A TO 63N	2240	⅝						
75A TO 75P	2620	75A TO 75N	2240	¾						
88A TO 88P	2620	88A TO 88N	2240	⅞						
38A TO 38N	2400	38A TO 38Q	4080	⅜	⅝	5	5⅞	15	7½	90
50A TO 50P	2620	50A TO 50Q	4080	½						
63A TO 63P	2620	63A TO 63Q	4080	⅝						
75A TO 75P	2620	75A TO 75Q	4080	¾						
88A TO 88P	2620	88A TO 88Q	4080	⅞						

SEE DETAIL M0.00 FOR SECTION NOTES

[1] ALLOWABLE LOADS HAVE BEEN INCREASED BY A FACTOR OF 1.2 FOR LOAD COMBINATIONS INCLUDING OVERSTRENGTH, Ω_0, PER ASCE 7-10 SEC. 12.4.3.3.

[2] WHEN THE BOLT CENTERLINE DISTANCE EXCEEDS 14", THE STRUT MUST BE ROTATED TO COMPLY TO THE DETAIL.

HCAi
OPM-0043
BY: William Staehlin
DATE: 01/23/2023
REVIEWED FOR CODE COMPLIANCE
CBC 2022 CALIFORNIA BUILDING CODE

MASON WEST
1601 E. Miraloma Ave. Placentia, CA 92870
TEL (714) 630 - 0701, www.masonwest.com

Jiefu "Jeff" Zhang, SE
California SE No. S5270

HANGER ATTACHMENT
TO CONCRETE FILLED METAL DECK
WITH (2) MASON IND. N.Y. SAS(E) CONCRETE ANCHORS

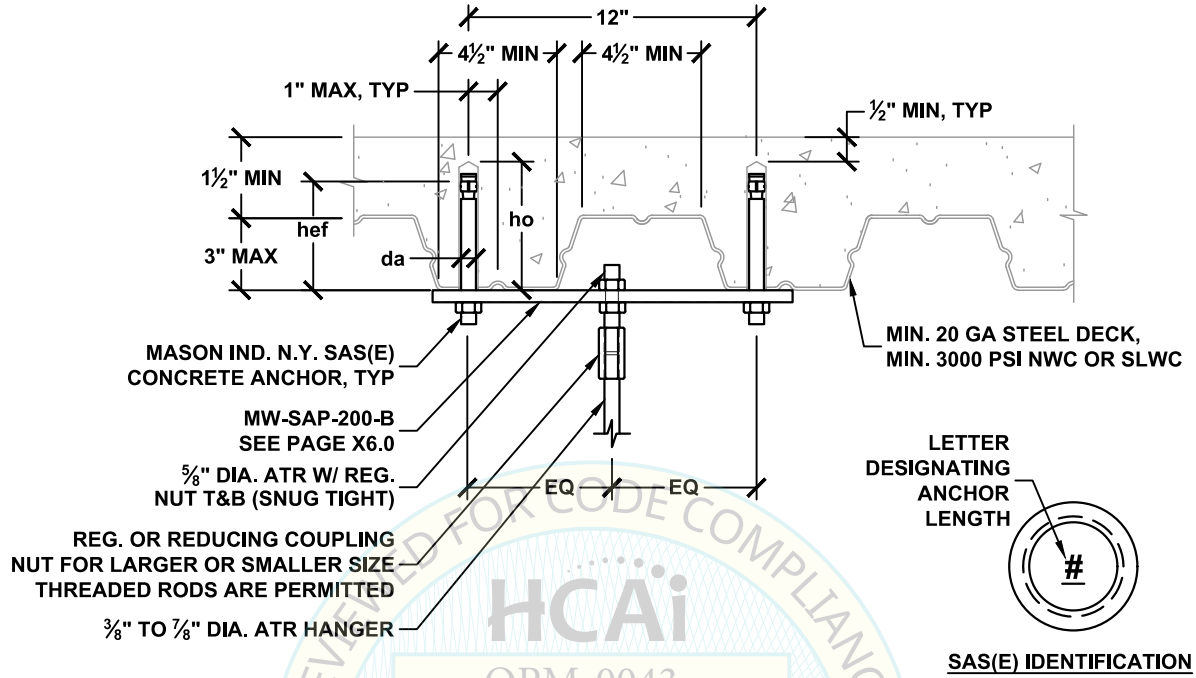

SAS(E) IDENTIFICATION

HANGER ATTACHMENT TYPE	STEEL COMPONENT ALLOWABLE VERTICAL LOAD Ta LBS	HANGER ATTACHMENT TYPE	CONCRETE ANCHOR ALLOWABLE VERTICAL LOAD Tac [1] LBS	ATR HANGER DIA. INCH	MASON IND. N.Y. SAS(E) CONCRETE ANCHOR (ICC ESR-3037) SPECIAL INSPECTION REQ'D					
					DIA. da INCH	MIN EFF. EMBED. hef INCH	MIN HOLE DEPTH ho INCH	MIN SPACING Smin INCH	MIN END DIST. Cmin INCH	TORQUE REQ'D FT-LBS
38A TO 38M	1930	38A TO 38N	2140	⅜	⅝	2¾	3⅝	8¼	4⅛	90
50A TO 50M	1930	50A TO 50N	2140	½						
63A TO 63M	1930	63A TO 63N	2140	⅝						
75A TO 75M	1930	75A TO 75N	2140	¾						
88A TO 88M	1930	88A TO 88N	2140	⅞						
38A TO 38M	1930	38A TO 38Q	4080	⅜	⅝	5	5⅞	15	7½	90
50A TO 50M	1930	50A TO 50Q	4080	½						
63A TO 63M	1930	63A TO 63Q	4080	⅝						
75A TO 75M	1930	75A TO 75Q	4080	¾						
88A TO 88M	1930	88A TO 88Q	4080	⅞						

SEE DETAIL M0.00 FOR SECTION NOTES

[1] ALLOWABLE LOADS HAVE BEEN INCREASED BY A FACTOR OF 1.2 FOR LOAD COMBINATIONS INCLUDING OVERSTRENGTH, Ω_0, PER ASCE 7-10 SEC. 12.4.3.3.

REVIEWED FOR CODE COMPLIANCE
HCAi
OPM-0043
BY: William Staehlin
DATE: 01/23/2023
CBC/IRC/IBC BUILDING CODE, 2022

MASON WEST
1601 E. Miraloma Ave. Placentia, CA 92870
TEL (714) 630 - 0701, www.masonwest.com

Jiefu "Jeff" Zhang, SE
California SE No. S5270

PAGE
M2.42

HANGER ATTACHMENT
TO CONCRETE FILLED METAL DECK
WITH (4) MASON IND. N.Y. SAS(E) CONCRETE ANCHORS

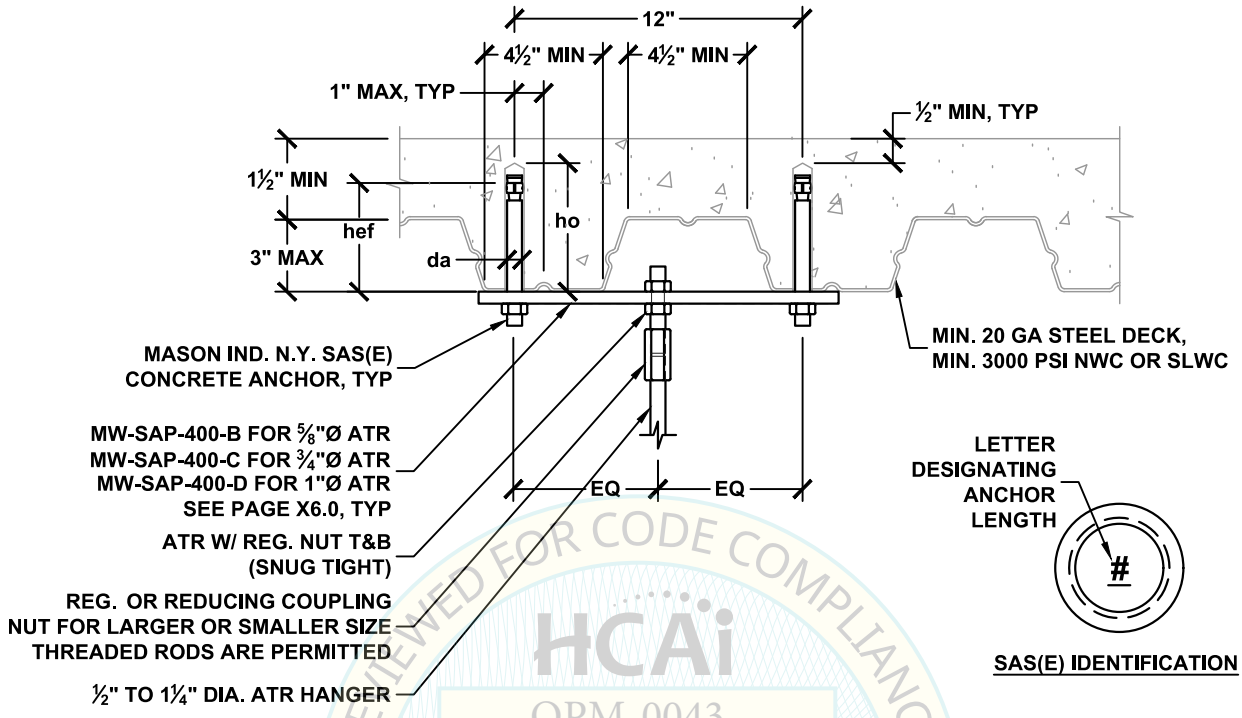

REVIEWED FOR CODE COMPLIANCE
HCAi
OPM-0043
BY: William Staehlin
DATE: 01/23/2023
CALIFORNIA BUILDING CODE

HANGER ATTACHMENT TYPE	STEEL COMPONENT ALLOWABLE VERTICAL LOAD Ta LBS	HANGER ATTACHMENT TYPE	CONCRETE ANCHOR ALLOWABLE VERTICAL LOAD Tac [1] LBS	ATR HANGER DIA. INCH	MASON IND. N.Y. SAS(E) CONCRETE ANCHOR (ICC ESR-3037) SPECIAL INSPECTION REQ'D					
					DIA. da INCH	MIN EFF. EMBED. hef INCH	MIN HOLE DEPTH ho INCH	MIN SPACING Smin INCH	MIN END DIST. Cmin INCH	TORQUE REQ'D FT-LBS
50A TO 50Q	3600	50A TO 50Q	4280	½	⅝	2¾	3⅝	8¼	4⅛	90
63A TO 63Q	3600	63A TO 63Q	4280	⅝						
75A TO 75Q	3500	75A TO 75Q	4280	¾						
88A TO 88Q	3500	88A TO 88Q	4280	⅞						
100A TO 100Q	3500	100A TO 100Q	4280	1						
125A TO 125Q	3500	125A TO 125Q	4280	1¼						
50A TO 50Q	3600	50A TO 50S	8160	½	⅝	5	5⅞	15	7½	90
63A TO 63Q	3600	63A TO 63S	8160	⅝						
75A TO 75Q	3500	75A TO 75S	8160	¾						
88A TO 88Q	3500	88A TO 88S	8160	⅞						
100A TO 100Q	3500	75A TO 75S	8160	1						
125A TO 125Q	3500	88A TO 88S	8160	1¼						

SEE DETAIL M0.00 FOR SECTION NOTES

[1] ALLOWABLE LOADS HAVE BEEN INCREASED BY A FACTOR OF 1.2 FOR LOAD COMBINATIONS INCLUDING OVERSTRENGTH, Ω_0, PER ASCE 7-10 SEC. 12.4.3.3.

MASON WEST
1601 E. Miraloma Ave. Placentia, CA 92870
TEL (714) 630 - 0701, www.masonwest.com

Jiefu "Jeff" Zhang, SE
California SE No. S5270

PAGE
M2.43

HANGER ATTACHMENT
TO CONCRETE FILLED METAL DECK
WITH (1) DEWALT/POWERS POWER-STUD+ SD2 CONCRETE ANCHOR

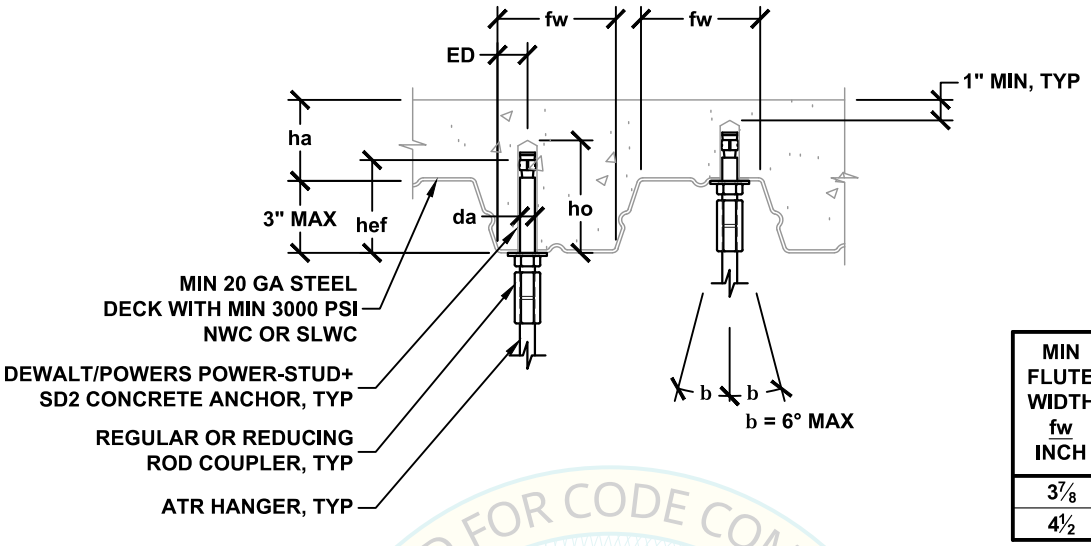

MIN FLUTE WIDTH fw INCH	MIN EDGE DIST ED INCH	MIN CONC. COVER ha INCH
3⅞	1	2
4½	1¼	3¼

HANGER ATTACHMENT TYPE	ALLOWABLE VERTICAL LOAD Ta [1] LBS	MIN ATR HANGER DIA. INCH	DEWALT/POWERS POWER-STUD+ SD2 CONCRETE ANCHOR (ICC ESR-2502) SPECIAL INSPECTION REQ'D					
			DIA. da INCH	MIN EFF. EMBED hef INCH	MIN HOLE DEPTH ho INCH	MIN SPACING Smin INCH	MIN END DIST. Cmin INCH	TORQUE REQ'D FT-LBS
38A TO 38G	590	⅜	⅜	2	2⅝	MAX OF: 3*hef OR 1.5*FLUTE WIDTH	3⅜	20
38A TO 38G	600	⅜	½	2	2¾		3⅜	40
50A TO 50G	600	½						
63A TO 63G	600	⅝						
38A TO 38K	1060	⅜	½	3¼	4		4⅞	40
50A TO 50K	1060	½						
63A TO 63K	1060	⅝						
50A TO 50L	1300	½	⅝	3¼	4¼		4⅞	60
63A TO 63L	1300	⅝						
75A TO 75L	1300	¾						
50A TO 50N	2110	½	⅝	4¼	5¼		6⅜	60
63A TO 63N	2110	⅝						
75A TO 75N	2110	¾						
FOR fw ≥ 4½"								
63A TO 63L	1420	⅝	¾	3¾	5	11¼	5⅝	110
75A TO 75L	1420	¾						
88A TO 88L	1420	⅞						

SEE DETAIL M0.00 FOR SECTION NOTES

[1] ALLOWABLE LOADS HAVE BEEN INCREASED BY A FACTOR OF 1.2 FOR LOAD COMBINATIONS INCLUDING OVERSTRENGTH, Ω_0, PER ASCE 7-10 SEC. 12.4.3.3.

REVIEWED FOR CODE COMPLIANCE
HCAi
OPM-0043
BY: William Staehlin
DATE: 01/23/2023
CALIFORNIA BUILDING CODE 2022

MASON WEST
1601 E. Miraloma Ave. Placentia, CA 92870
TEL (714) 630 - 0701, www.masonwest.com

Jiefu "Jeff" Zhang, SE
California SE No. S5270

HANGER ATTACHMENT
TO CONCRETE FILLED METAL DECK
WITH (2) DEWALT/POWERS POWER-STUD+ SD2 CONCRETE ANCHORS

MIN FLUTE WIDTH fw INCH	MIN EDGE DIST ED INCH	MIN CONC. COVER ha INCH
3⅞	1	2
4½	1¼	3¼

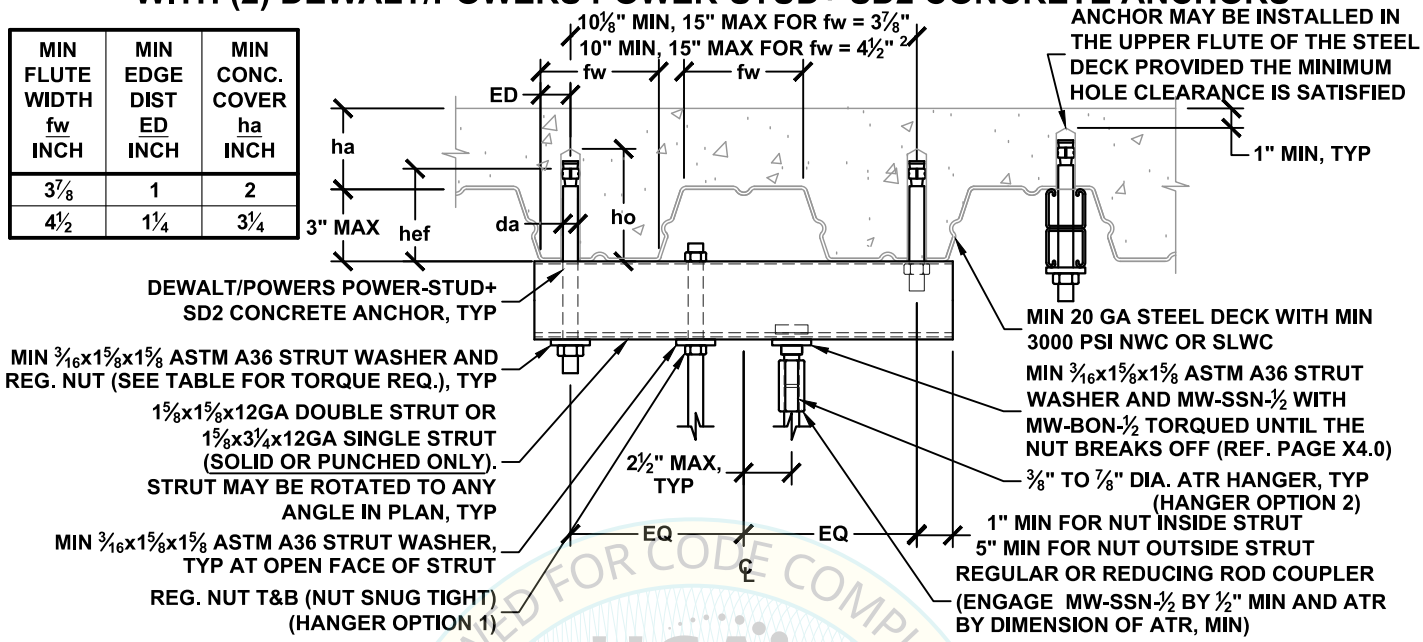

HANGER ATTACHMENT TYPE	STEEL COMPONENT ALLOWABLE VERTICAL LOAD Ta LBS	HANGER ATTACHMENT TYPE	CONCRETE ANCHOR ALLOWABLE VERTICAL LOAD Tac [1] LBS	ATR HANGER DIA. INCH	DEWALT/POWERS POWER-STUD+ SD2 CONCRETE ANCHOR (ICC ESR-2502) SPECIAL INSPECTION REQ'D					
					DIA. da INCH	MIN EFF. EMBED. hef INCH	MIN HOLE DEPTH ho INCH	MIN SPACING Smin INCH	MIN END DIST. Cmin INCH	TORQUE REQ'D FT-LBS
38A TO 38N	2400	38A TO 38H	790	⅜	⅜	2	2⅝	MAX OF: 3*hef OR 1.5*FLUTE WIDTH	3⅜	20
50A TO 50P	2620	50A TO 50H	790	½						
63A TO 63P	2620	63A TO 63H	790	⅝						
75A TO 75P	2620	75A TO 75H	790	¾						
88A TO 88P	2620	88A TO 88H	790	⅞						
38A TO 38N	2400	50A TO 50L	1410	⅜	½	3¼	4	MAX OF: 3*hef OR 1.5*FLUTE WIDTH	4⅞	40
50A TO 50P	2620	50A TO 50L	1410	½						
63A TO 63P	2620	63A TO 63L	1410	⅝						
75A TO 75P	2620	75A TO 75L	1410	¾						
88A TO 88P	2620	88A TO 88L	1410	⅞						
38A TO 38N	2400	50A TO 50P	2810	⅜	⅝	4¼	5¼	MAX OF: 3*hef OR 1.5*FLUTE WIDTH	6⅜	60
50A TO 50P	2620	50A TO 50P	2810	½						
63A TO 63P	2620	63A TO 63P	2810	⅝						
75A TO 75P	2620	75A TO 75P	2810	¾						
88A TO 88P	2620	88A TO 88P	2810	⅞						

SEE DETAIL M0.00 FOR SECTION NOTES

[1] ALLOWABLE LOADS HAVE BEEN INCREASED BY A FACTOR OF 1.2 FOR LOAD COMBINATIONS INCLUDING OVERSTRENGTH, Ω_0, PER ASCE 7-10 SEC. 12.4.3.3.

[2] WHEN THE BOLT CENTERLINE DISTANCE EXCEEDS 13⅞" FOR fw = 3⅞" OR 14" FOR fw = 4½", THE STRUT MUST BE ROTATED TO COMPLY TO THE DETAIL.

MASON WEST
1601 E. Miraloma Ave. Placentia, CA 92870
TEL (714) 630 - 0701, www.masonwest.com

Jiefu "Jeff" Zhang, SE
California SE No. S5270

PAGE
M2.61

HCAi OPM-0043 REVIEWED FOR CODE COMPLIANCE BY: William Staehlin DATE: 01/23/2023 CBC 2022 CALIFORNIA BUILDING CODE

HANGER ATTACHMENT
TO CONCRETE FILLED METAL DECK
WITH (2) DEWALT/POWERS POWER-STUD+ SD2 CONCRETE ANCHORS

MIN FLUTE WIDTH fw INCH	MIN EDGE DIST ED INCH	MIN CONC. COVER ha INCH
3⅞	1	2
4½	1¼	3¼

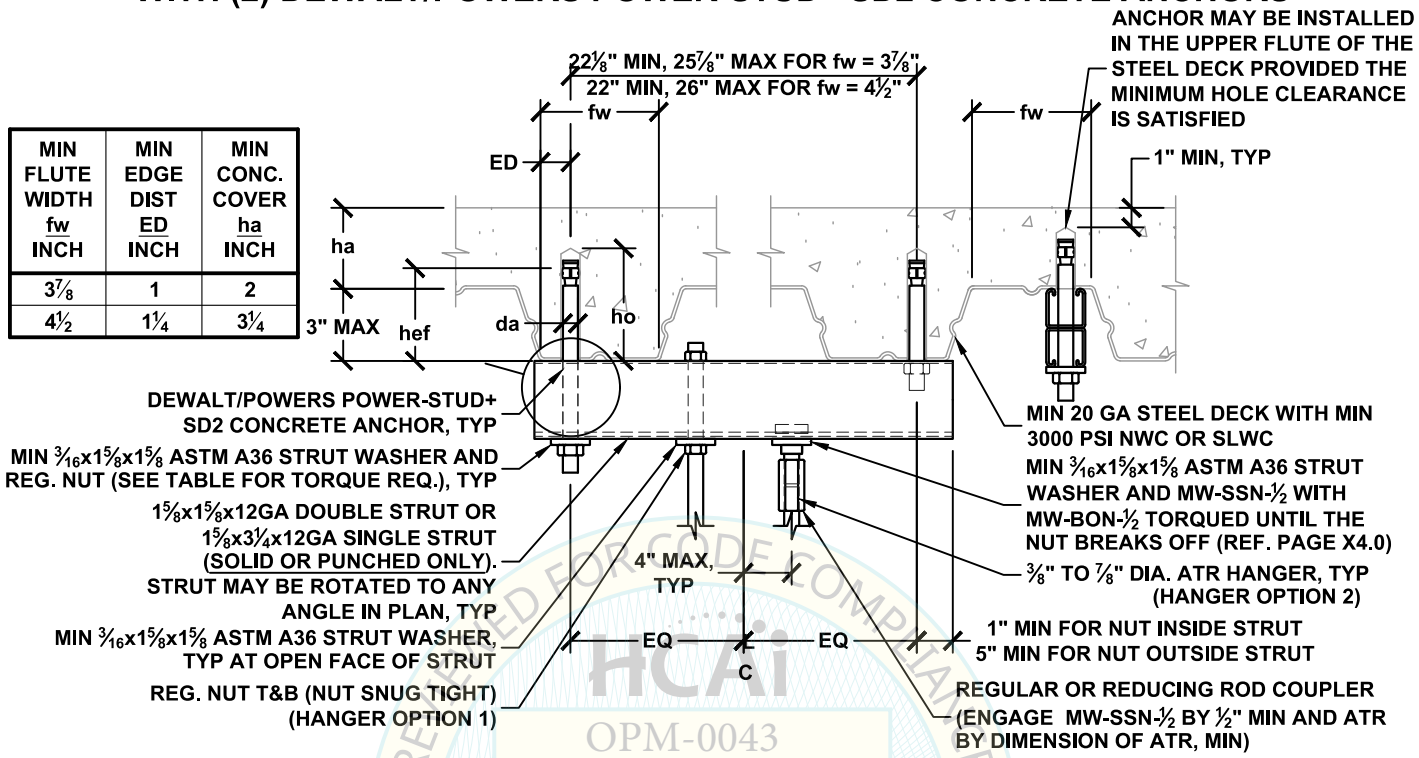

HANGER ATTACHMENT TYPE	STEEL COMPONENT ALLOWABLE VERTICAL LOAD Ta LBS	HANGER ATTACHMENT TYPE	CONCRETE ANCHOR ALLOWABLE VERTICAL LOAD Tac [1] LBS	ATR HANGER DIA. INCH	DEWALT/POWERS POWER-STUD+ SD2 CONCRETE ANCHOR (ICC ESR-2502) SPECIAL INSPECTION REQ'D					
					DIA. da INCH	MIN EFF. EMBED. hef INCH	MIN HOLE DEPTH ho INCH	MIN SPACING Smin INCH	MIN END DIST. Cmin INCH	TORQUE REQ'D FT-LBS
38A TO 38M	1860	38A TO 38J	870	⅜	⅜	2	2⅝	MAX OF: 3*hef OR 1.5*FLUTE WIDTH	3⅜	20
50A TO 50M	1860	50A TO 50J	870	½						
63A TO 63M	1860	63A TO 63J	870	⅝						
75A TO 75M	1860	75A TO 75J	870	¾						
88A TO 88M	1860	88A TO 88J	870	⅞						
38A TO 38M	1860	38A TO 38L	1550	⅜	½	3¼	4	MAX OF: 3*hef OR 1.5*FLUTE WIDTH	4⅞	40
50A TO 50M	1860	50A TO 50L	1550	½						
63A TO 63M	1860	63A TO 63L	1550	⅝						
75A TO 75M	1860	75A TO 75L	1550	¾						
88A TO 88M	1860	88A TO 88L	1550	⅞						

SEE DETAIL M0.00 FOR SECTION NOTES

[1] ALLOWABLE LOADS HAVE BEEN INCREASED BY A FACTOR OF 1.2 FOR LOAD COMBINATIONS INCLUDING OVERSTRENGTH, Ω_0, PER ASCE 7-10 SEC. 12.4.3.3.

REVIEWED FOR CODE COMPLIANCE
HCAi
OPM-0043
BY: William Staehlin
DATE: 1/23/2023
CALIFORNIA BUILDING CODE

MASON WEST
1601 E. Miraloma Ave. Placentia, CA 92870
TEL (714) 630 - 0701, www.masonwest.com

Jiefu "Jeff" Zhang, SE
California SE No. S5270

PAGE
M2.61.1

HANGER ATTACHMENT
TO CONCRETE FILLED METAL DECK
WITH (2) DEWALT/POWERS POWER-STUD+ SD2 CONCRETE ANCHORS

MIN FLUTE WIDTH fw INCH	MIN EDGE DIST ED INCH	MIN CONC. COVER ha INCH
3⅞	1	2
4½	1¼	3¼

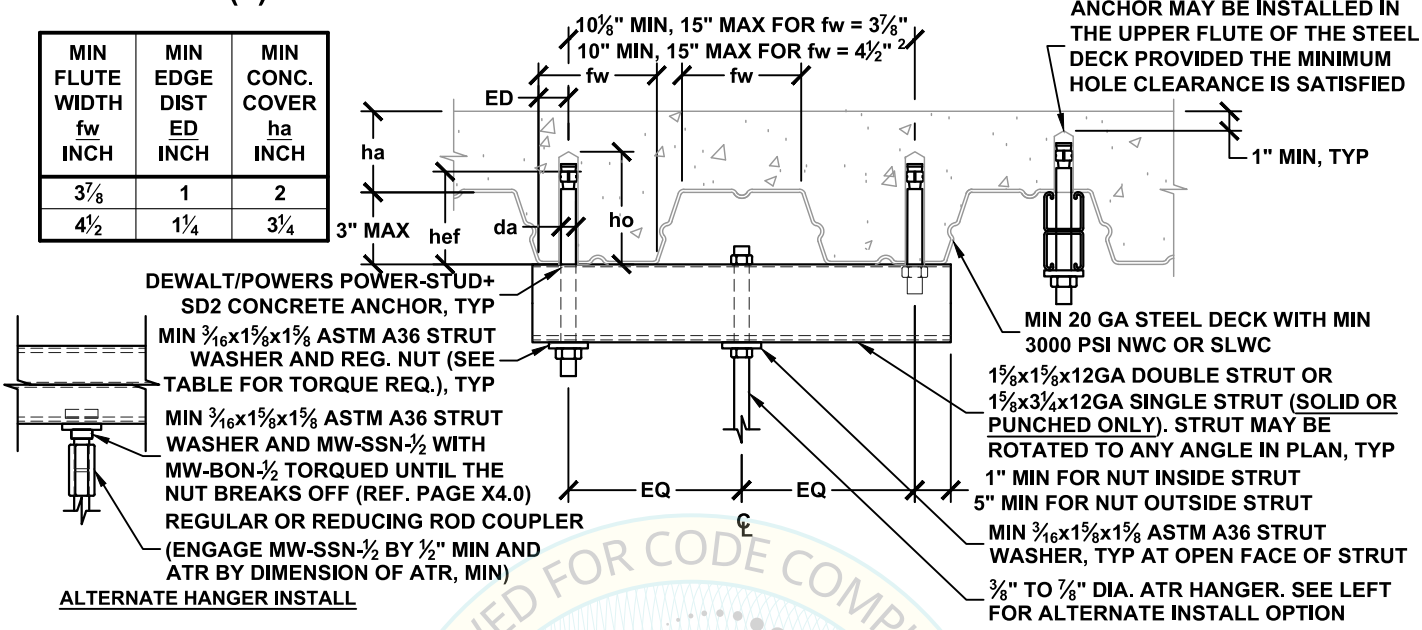

HANGER ATTACHMENT TYPE	STEEL COMPONENT ALLOWABLE VERTICAL LOAD Ta LBS	HANGER ATTACHMENT TYPE	CONCRETE ANCHOR ALLOWABLE VERTICAL LOAD Tac [1] LBS	ATR HANGER DIA. INCH	DEWALT/POWERS POWER-STUD+ SD2 CONCRETE ANCHOR (ICC ESR-2502) SPECIAL INSPECTION REQ'D					
					DIA. da INCH	MIN EFF. EMBED. hef INCH	MIN HOLE DEPTH ho INCH	MIN SPACING Smin INCH	MIN END DIST. Cmin INCH	TORQUE REQ'D FT-LBS
38A TO 38N	2400	38A TO 38K	1180	⅜	⅜	2	2⅝	MAX OF: 3*hef OR 1.5*FLUTE WIDTH	3⅜	20
50A TO 50P	2620	50A TO 50K	1180	½						
63A TO 63P	2620	63A TO 63K	1180	⅝						
75A TO 75P	2620	75A TO 75K	1180	¾						
88A TO 88P	2620	88A TO 88K	1180	⅞						
38A TO 38N	2400	38A TO 38N	2120	⅜	½	3¼	4	MAX OF: 3*hef OR 1.5*FLUTE WIDTH	4⅞	40
50A TO 50P	2620	50A TO 50N	2120	½						
63A TO 63P	2620	63A TO 63N	2120	⅝						
75A TO 75P	2620	75A TO 75N	2120	¾						
88A TO 88P	2620	88A TO 88N	2120	⅞						
38A TO 38N	2400	38A TO 38Q	4220	⅜	⅝	4¼	5¼	MAX OF: 3*hef OR 1.5*FLUTE WIDTH	6⅜	60
50A TO 50P	2620	50A TO 50Q	4220	½						
63A TO 63P	2620	63A TO 63Q	4220	⅝						
75A TO 75P	2620	75A TO 75Q	4220	¾						
88A TO 88P	2620	88A TO 88Q	4220	⅞						

SEE DETAIL M0.00 FOR SECTION NOTES

[1] ALLOWABLE LOADS HAVE BEEN INCREASED BY A FACTOR OF 1.2 FOR LOAD COMBINATIONS INCLUDING OVERSTRENGTH, Ω_0, PER ASCE 7-10 SEC. 12.4.3.3.

[2] WHEN THE BOLT CENTERLINE DISTANCE EXCEEDS 13⅞" FOR fw = 3⅞" OR 14" FOR fw = 4½", THE STRUT MUST BE ROTATED TO COMPLY TO THE DETAIL.

HCAi
OPM-0043
REVIEWED FOR CODE COMPLIANCE
BY: William Staehlin
DATE: 01/23/2023
CALIFORNIA BUILDING CODE, 2022

MASON WEST
1601 E. Miraloma Ave. Placentia, CA 92870
TEL (714) 630 - 0701, www.masonwest.com

Jiefu "Jeff" Zhang, SE
California SE No. S5270

PAGE
M2.61.2

HANGER ATTACHMENT
TO CONCRETE FILLED METAL DECK
WITH (1) DEWALT/POWERS POWER-STUD+ SD2 CONCRETE ANCHOR

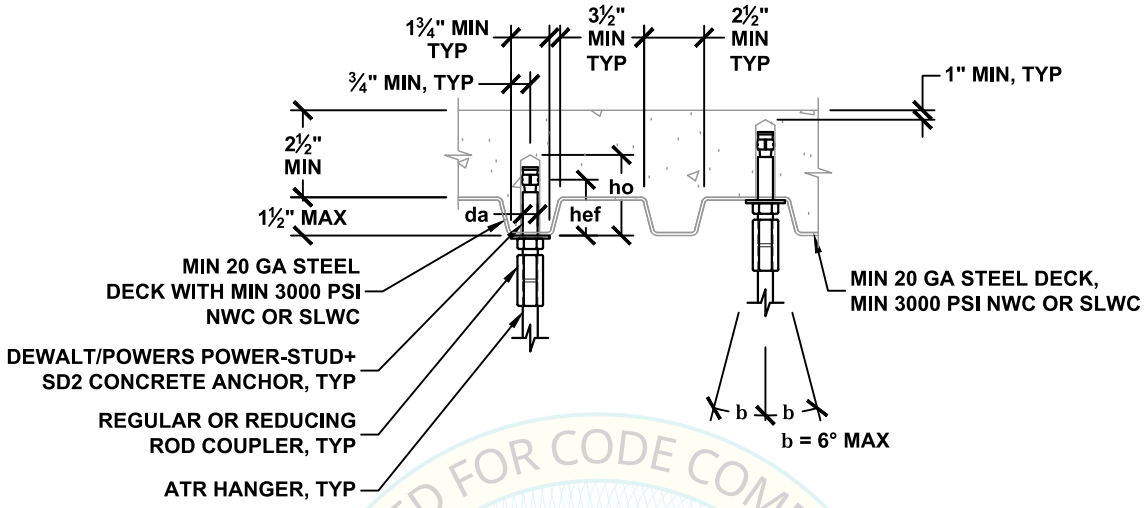

HANGER ATTACHMENT TYPE	ALLOWABLE VERTICAL LOAD Ta [1] LBS	MIN ATR HANGER DIA. INCH	DEWALT/POWERS POWER-STUD+ SD2 CONCRETE ANCHOR (ICC ESR-2502) SPECIAL INSPECTION REQ'D					
			DIA. da INCH	MIN EFF. EMBED hef INCH	MIN HOLE DEPTH ho INCH	MIN SPACING Smin INCH	MIN END DIST. Cmin INCH	TORQUE REQ'D FT-LBS
38A TO 38F	510	3/8	3/8	2	2 5/8	6	3	20
38A TO 38G	590	3/8						
50A TO 50G	590	1/2	1/2	2	2 3/4	6	3	40
63A TO 63G	590	5/8						

SEE DETAIL M0.00 FOR SECTION NOTES

[1] ALLOWABLE LOADS HAVE BEEN INCREASED BY A FACTOR OF 1.2 FOR LOAD COMBINATIONS INCLUDING OVERSTRENGTH, Ω_0, PER ASCE 7-10 SEC. 12.4.3.3.

REVIEWED FOR CODE COMPLIANCE
HCAi
OPM-0043
BY: William Staehlin
DATE: 01/23/2023
CALIFORNIA BUILDING CODE, 2022

MASON WEST
1601 E. Miraloma Ave. Placentia, CA 92870
TEL (714) 630 - 0701, www.masonwest.com

Jiefu "Jeff" Zhang, SE
California SE No. S5270

PAGE
M2.62

HANGER ATTACHMENT
TO CONCRETE FILLED METAL DECK
WITH (2) DEWALT/POWERS POWER-STUD+ SD2 CONCRETE ANCHORS

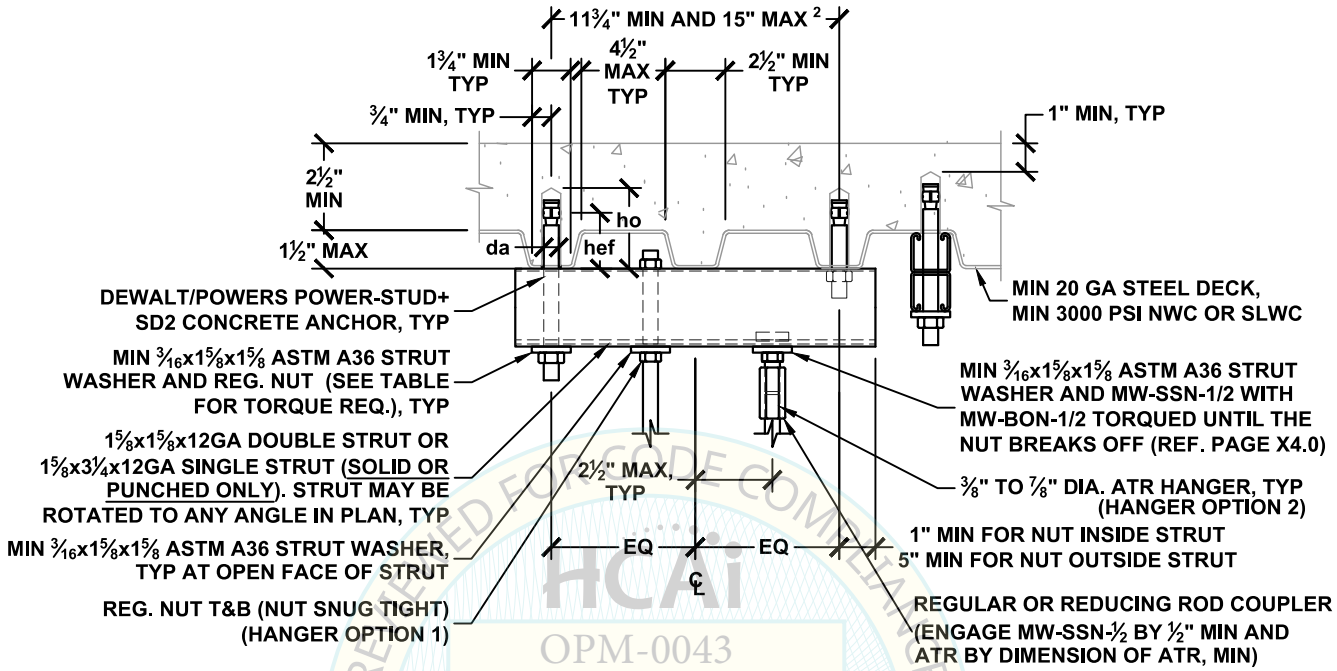

HANGER ATTACHMENT TYPE	STEEL COMPONENT ALLOWABLE VERTICAL LOAD Ta LBS	HANGER ATTACHMENT TYPE	CONCRETE ANCHOR ALLOWABLE VERTICAL LOAD Tac [1] LBS	ATR HANGER DIA. INCH	DEWALT/POWERS POWER-STUD+ SD2 CONCRETE ANCHOR (ICC ESR-2502) SPECIAL INSPECTION REQ'D				
					DIA. da INCH	MIN EFF. EMBED. hef INCH	MIN HOLE DEPTH ho INCH	MIN SPACING Smin INCH	MIN END DIST. Cmin INCH	TORQUE REQ'D FT-LBS
38A TO 38N	2400	38A TO 38H	720	⅜	⅜	2	2⅝	6	3	20
50A TO 50P	2620	50A TO 50H	720	½						
63A TO 63P	2620	63A TO 63H	720	⅝						
75A TO 75P	2620	75A TO 75H	720	¾						
88A TO 88P	2620	88A TO 88H	720	⅞						
38A TO 38N	2400	38A TO 38H	830	⅜	½	2	2¾	6	3	40
50A TO 50P	2620	50A TO 50H	830	½						
63A TO 63P	2620	63A TO 63H	830	⅝						
75A TO 75P	2620	75A TO 75H	830	¾						
88A TO 88P	2620	88A TO 88H	830	⅞						

SEE DETAIL M0.00 FOR SECTION NOTES

[1] ALLOWABLE LOADS HAVE BEEN INCREASED BY A FACTOR OF 1.2 FOR LOAD COMBINATIONS INCLUDING OVERSTRENGTH, Ω_0, PER ASCE 7-10 SEC. 12.4.3.3.

[2] WHEN THE BOLT CENTERLINE DISTANCE EXCEEDS 12¼", THE STRUT MUST BE ROTATED TO COMPLY TO THE DETAIL.

REVIEWED FOR CODE COMPLIANCE
HCAi
OPM-0043
BY: William Staehlin
DATE: 1/23/2023
CALIFORNIA BUILDING CODE 2022

MASON WEST
1601 E. Miraloma Ave. Placentia, CA 92870
TEL (714) 630 - 0701, www.masonwest.com

Jiefu "Jeff" Zhang, SE
California SE No. S5270

HANGER ATTACHMENT
TO CONCRETE FILLED METAL DECK
WITH (2) DEWALT/POWERS POWER-STUD+ SD2 CONCRETE ANCHORS

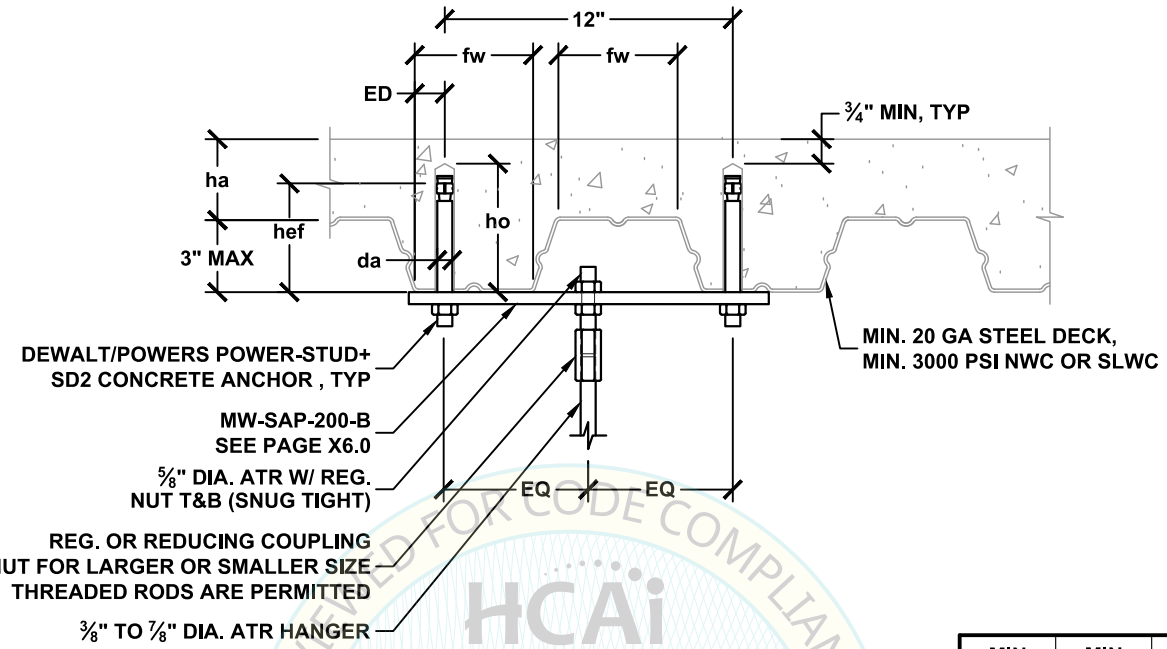

MIN FLUTE WIDTH fw INCH	MIN EDGE DIST ED INCH	MIN CONC. COVER ha INCH
3⅞	1	2
4½	1¼	3¼

HANGER ATTACHMENT TYPE	STEEL COMPONENT ALLOWABLE VERTICAL LOAD Ta LBS	HANGER ATTACHMENT TYPE	CONCRETE ANCHOR ALLOWABLE VERTICAL LOAD Tac [1] LBS	ATR HANGER DIA. INCH	DEWALT/POWERS POWER-STUD+ SD2 CONCRETE ANCHOR (ICC ESR-2502) SPECIAL INSPECTION REQ'D					
					DIA. da INCH	MIN EFF. EMBED. hef INCH	MIN HOLE DEPTH ho INCH	MIN SPACING Smin INCH	MIN END DIST. Cmin INCH	TORQUE REQ'D FT-LBS
38A TO 38M	1930	38A TO 38P	2600	⅜	⅝	3¼	4¼	MAX OF: 3*hef OR 1.5*FLUTE WIDTH	4⅞	60
50A TO 50M	1930	50A TO 50P	2600	½						
63A TO 63M	1930	63A TO 63P	2600	⅝						
75A TO 75M	1930	75A TO 75P	2600	¾						
88A TO 88M	1930	88A TO 88P	2600	⅞						

SEE DETAIL M0.00 FOR SECTION NOTES

[1] ALLOWABLE LOADS HAVE BEEN INCREASED BY A FACTOR OF 1.2 FOR LOAD COMBINATIONS INCLUDING OVERSTRENGTH, Ω_0, PER ASCE 7-10 SEC. 12.4.3.3.

REVIEWED FOR CODE COMPLIANCE
CALIFORNIA BUILDING CODE
HCAi
OPM-0043
BY: William Staehlin
DATE: 01/23/2023

MASON WEST
1601 E. Miraloma Ave. Placentia, CA 92870
TEL (714) 630 - 0701, www.masonwest.com

Jiefu "Jeff" Zhang, SE
California SE No. S5270

PAGE
M2.64

HANGER ATTACHMENT
TO CONCRETE FILLED METAL DECK
WITH (4) DEWALT/POWERS POWER-STUD+ SD2 CONCRETE ANCHORS

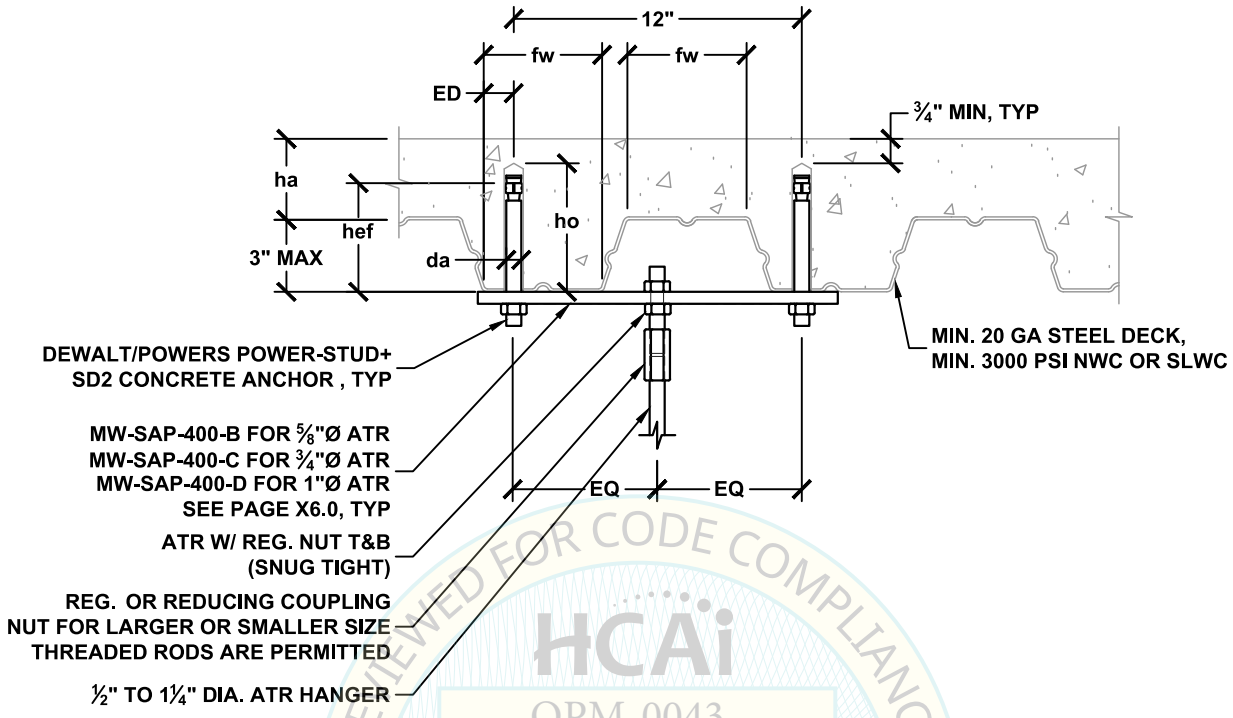

REVIEWED FOR CODE COMPLIANCE
HCAi
OPM-0043
BY: William Staehlin
DATE: 01/23/2023
CALIFORNIA BUILDING CODE 2022

MIN FLUTE WIDTH fw INCH	MIN EDGE DIST ED INCH	MIN CONC. COVER ha INCH
3⅞	1	2
4½	1¼	3¼

HANGER ATTACHMENT TYPE	STEEL COMPONENT ALLOWABLE VERTICAL LOAD Ta LBS	HANGER ATTACHMENT TYPE	CONCRETE ANCHOR ALLOWABLE VERTICAL LOAD Tac [1] LBS	ATR HANGER DIA. INCH	DEWALT/POWERS POWER-STUD+ SD2 CONCRETE ANCHOR (ICC ESR-2502) SPECIAL INSPECTION REQ'D					
					DIA. da INCH	MIN EFF. EMBED. hef INCH	MIN HOLE DEPTH ho INCH	MIN SPACING Smin INCH	MIN END DIST. Cmin INCH	TORQUE REQ'D FT-LBS
50A TO 50Q	3600	50A TO 50R	5200	½	⅝	3¼	4¼	MAX OF: 3*hef OR 1.5*FLUTE WIDTH	4⅞	60
63A TO 63Q	3600	63A TO 63R	5200	⅝						
75A TO 75Q	3500	75A TO 75R	5200	¾						
88A TO 88Q	3500	88A TO 88R	5200	⅞						
100A TO 100Q	3500	100A TO 100R	5200	1						
125A TO 125Q	3500	125A TO 125R	5200	1¼						

SEE DETAIL M0.00 FOR SECTION NOTES

[1] ALLOWABLE LOADS HAVE BEEN INCREASED BY A FACTOR OF 1.2 FOR LOAD COMBINATIONS INCLUDING OVERSTRENGTH, Ω_0, PER ASCE 7-10 SEC. 12.4.3.3.

MASON WEST
1601 E. Miraloma Ave. Placentia, CA 92870
TEL (714) 630 - 0701, www.masonwest.com

Jiefu "Jeff" Zhang, SE
California SE No. S5270

HANGER ATTACHMENT
TO CONCRETE FILLED METAL DECK
WITH (1) CONCRETE SCREW ANCHOR

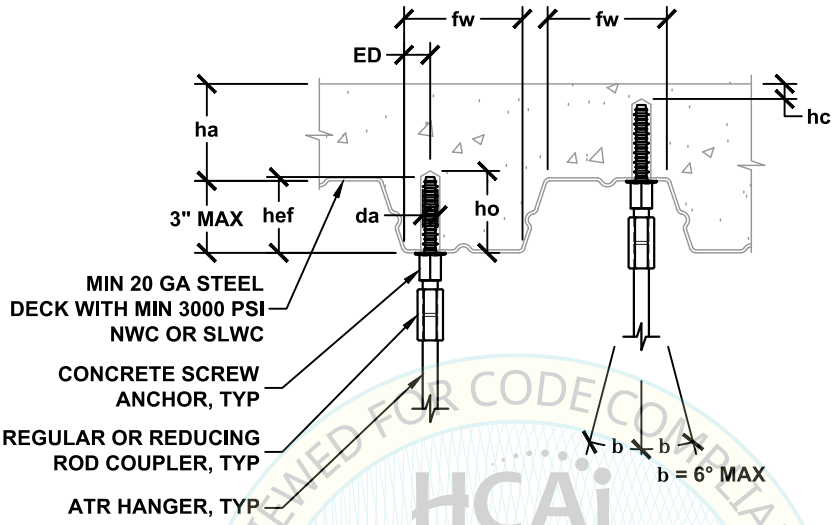

REVIEWED FOR CODE COMPLIANCE
HCAi
OPM-0043
BY: William Staehlin
DATE: 01/23/2023
CALIFORNIA BUILDING CODE, 2022

ANCHOR	MIN FLUTE WIDTH fw INCH	MIN EDGE DIST ED INCH	MIN CONC. COVER ha INCH	MIN HOLE CLEAR hc INCH
DEWALT/POWERS	3⅞	1	2½	¾
MASON	4½	1¼	1½	¾
HILTI	3⅞	1¼	2½	1¼

HANGER ATTACHMENT TYPE	ALLOWABLE VERTICAL LOAD Ta [1,2] LBS	ATR HANGER DIA. INCH	DEWALT/POWERS HANGERMATE+ CONCRETE SCREW ANCHOR (ICC ESR-3889) SPECIAL INSPECTION REQ'D					
			DIA. da INCH	MIN EFF. EMBED. hef INCH	MIN HOLE DEPTH ho INCH	MIN SPACING Smin INCH	MIN EDGE Cmin INCH	MAX INSTALL. TORQUE FT-LBS
38A TO 38E	380	⅜	¼ W/ ⅜"Ø HEAD	2	2⅝	6	3	25
50A TO 50E	380	½						

SEE DETAIL M0.00 FOR SECTION NOTES

[1] ALLOWABLE LOADS HAVE BEEN INCREASED BY A FACTOR OF 1.2 FOR LOAD COMBINATIONS INCLUDING OVERSTRENGTH, Ω_0, PER ASCE 7-10 SEC. 12.4.3.3.

[2] SEE PAGE M2.70.1 FOR ADDITIONAL ALLOWABLE LOAD TABLES.

MASON WEST
1601 E. Miraloma Ave. Placentia, CA 92870
TEL (714) 630 - 0701, www.masonwest.com

Jiefu "Jeff" Zhang, SE
California SE No. S5270

PAGE
M2.70

HANGER ATTACHMENT
TO CONCRETE FILLED METAL DECK
WITH (1) CONCRETE SCREW ANCHOR

HANGER ATTACHMENT TYPE	ALLOWABLE VERTICAL LOAD Ta [1,2] LBS	ATR HANGER DIA. INCH	MASON IND. N.Y. SAST CONCRETE SCREW ANCHOR (ICC ESR-2713) SPECIAL INSPECTION REQ'D					
			DIA. da INCH	MIN EFF. EMBED. hef INCH	MIN HOLE DEPTH ho INCH	MIN SPACING Smin INCH	MIN EDGE Cmin INCH	MAX INSTALL. TORQUE FT-LBS
38A TO 38E	360	3/8	3/8 W/ 3/8"Ø HEAD	1 7/8	2 3/4	6 3/4	3 3/8	50
50A TO 50E	360	1/2						
38A TO 38E	360	3/8	3/8 W/ 1/2"Ø HEAD	1 7/8	3	6 3/4	3 3/8	50
50A TO 50E	360	1/2						
63A TO 63E	360	5/8						

HANGER ATTACHMENT TYPE	ALLOWABLE VERTICAL LOAD Ta [1,2] LBS	ATR HANGER DIA. INCH	HILTI KH-EZ-I CONCRETE SCREW ANCHOR (ICC ESR-3027) SPECIAL INSPECTION REQ'D					
			DIA. da INCH	MIN EFF. EMBED. hef INCH	MIN HOLE DEPTH ho INCH	MIN SPACING Smin INCH	MIN EDGE Cmin INCH	MAX INSTALL. TORQUE FT-LBS
38A TO 38D	250	3/8	1/4 W/ 3/8"Ø HEAD	1 1/4	2	6 3/4	3 3/8	18
50A TO 50D	250	1/2						
38A TO 38E	380	3/8	1/4 W/ 3/8"Ø HEAD	2	2 7/8	6 3/4	3 3/8	18
50A TO 50E	380	1/2						

SEE DETAIL M0.00 FOR SECTION NOTES

[1] ALLOWABLE LOADS HAVE BEEN INCREASED BY A FACTOR OF 1.2 FOR LOAD COMBINATIONS INCLUDING OVERSTRENGTH, Ω_0, PER ASCE 7-10 SEC. 12.4.3.3.

REVIEWED FOR CODE COMPLIANCE
HCAi
OPM-0043
BY: William Staehlin
DATE: 01/23/2023
CALIFORNIA BUILDING CODE 2022

MASON WEST
1601 E. Miraloma Ave. Placentia, CA 92870
TEL (714) 630 - 0701, www.masonwest.com

Jiefu "Jeff" Zhang, SE
California SE No. S5270

HANGER ATTACHMENT TO CONCRETE FILLED METAL DECK WITH (2) CONCRETE SCREW ANCHORS

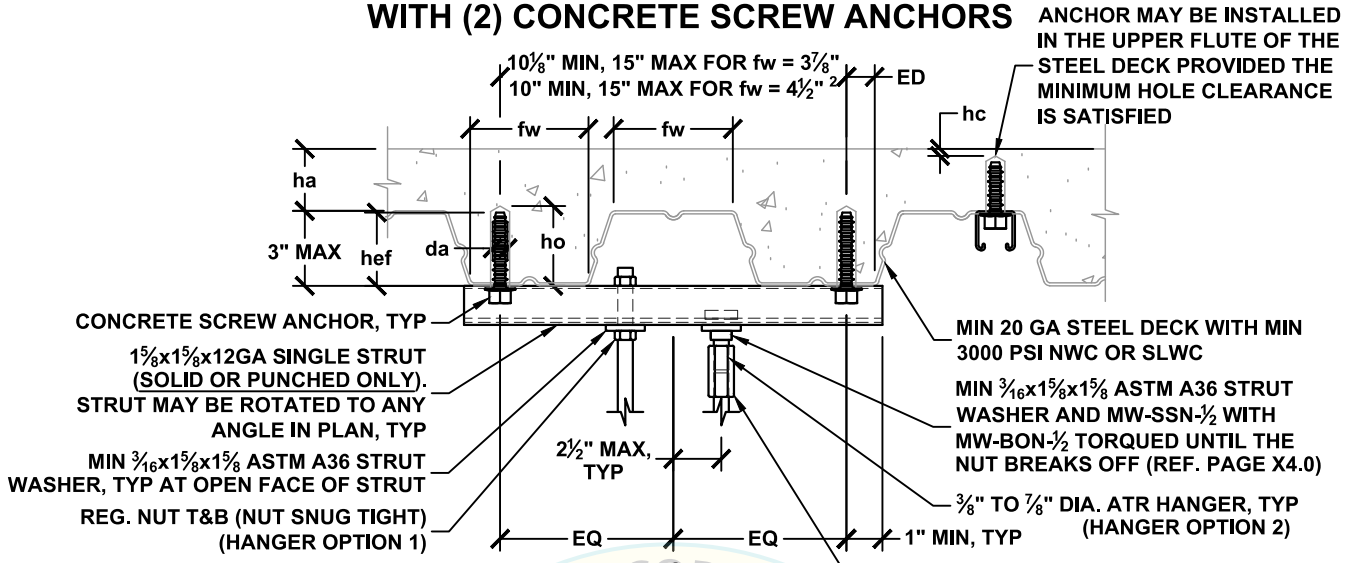

ANCHOR	MIN FLUTE WIDTH fw INCH	MIN EDGE DIST ED INCH	MIN CONC. COVER ha INCH	MIN HOLE CLEAR hc INCH
DEWALT/POWERS	3⅞	1	2½	¾
MASON	4½	1¼	1½	¾
HILTI	4½	1¼	3¼	1¼

HANGER ATTACHMENT TYPE	STEEL COMPONENT ALLOWABLE VERTICAL LOAD Ta LBS	HANGER ATTACHMENT TYPE	CONCRETE ANCHOR ALLOWABLE VERTICAL LOAD Tac [1] LBS	ATR HANGER DIA. INCH	DEWALT/POWERS SCREW-BOLT+ CONCRETE SCREW ANCHOR (ICC ESR-3889) SPECIAL INSPECTION REQ'D					
					DIA. da INCH	MIN EFF. EMBED. hef INCH	MIN HOLE DEPTH ho INCH	MIN SPACING Smin INCH	MIN END DIST. Cmin INCH	MAX INSTALL. TORQUE FT-LBS
38A TO 38K	1100	38A TO 38K	1110	⅜	⅜	2½	3⅜	7½	3¾	40
50A TO 50K	1100	50A TO 50K	1110	½						
63A TO 63K	1100	63A TO 63K	1110	⅝						
75A TO 75K	1100	75A TO 75K	1110	¾						
88A TO 88K	1100	88A TO 88K	1110	⅞						
38A TO 38K	1100	38A TO 38N	2200	⅜	½	3¼	4⅜	9¾	4⅞	60
50A TO 50K	1100	50A TO 50N	2200	½						
63A TO 63K	1100	63A TO 63N	2200	⅝						
75A TO 75K	1100	75A TO 75N	2200	¾						
88A TO 88K	1100	88A TO 88N	2200	⅞						

SEE DETAIL M0.00 FOR SECTION NOTES

[1] ALLOWABLE LOADS HAVE BEEN INCREASED BY A FACTOR OF 1.2 FOR LOAD COMBINATIONS INCLUDING OVERSTRENGTH, Ω_0, PER ASCE 7-10 SEC. 12.4.3.3.

[2] WHEN THE BOLT CENTERLINE DISTANCE EXCEEDS 13⅞" FOR fw = 3⅞" OR 14" FOR fw = 4½", THE STRUT MUST BE ROTATED TO COMPLY TO THE DETAIL.

[3] SEE PAGE M2.71.1 FOR ADDITIONAL ALLOWABLE LOAD TABLES.

MASON WEST
1601 E. Miraloma Ave. Placentia, CA 92870
TEL (714) 630 - 0701, www.masonwest.com

Jiefu "Jeff" Zhang, SE
California SE No. S5270

PAGE
M2.71

REVIEWED FOR CODE COMPLIANCE
ICCAi
OPM-0043
BY: William Staehlin
DATE: 1/23/2023
CALIFORNIA BUILDING CODE

HANGER ATTACHMENT
TO CONCRETE FILLED METAL DECK
WITH (2) CONCRETE SCREW ANCHORS

HANGER ATTACHMENT TYPE	STEEL COMPONENT ALLOWABLE VERTICAL LOAD Ta LBS	HANGER ATTACHMENT TYPE	CONCRETE ANCHOR ALLOWABLE VERTICAL LOAD Tac [1] LBS	ATR HANGER DIA. INCH	MASON IND. N.Y. SAST CONCRETE SCREW ANCHOR (ICC ESR-2713) SPECIAL INSPECTION REQ'D					
					DIA. da INCH	MIN EFF. EMBED. hef INCH	MIN HOLE DEPTH ho INCH	MIN SPACING Smin INCH	MIN END DIST. Cmin INCH	MAX INSTALL. TORQUE FT-LBS
38A TO 38K	1100	38A TO 38C	200	3/8	3/8	1 1/4	2 1/8	6 3/4	3 3/8	50
50A TO 50K	1100	50A TO 50C	200	1/2						
63A TO 63K	1100	63A TO 63C	200	5/8						
75A TO 75K	1100	75A TO 75C	200	3/4						
88A TO 88K	1100	88A TO 88C	200	7/8						
38A TO 38K	1100	38A TO 38F	490	3/8	1/2	1 3/8	2 1/2	6 3/4	3 3/8	65
50A TO 50K	1100	50A TO 50F	490	1/2						
63A TO 63K	1100	63A TO 63F	490	5/8						
75A TO 75K	1100	75A TO 75F	490	3/4						
88A TO 88K	1100	88A TO 88F	490	7/8						

HANGER ATTACHMENT TYPE	STEEL COMPONENT ALLOWABLE VERTICAL LOAD Ta LBS	HANGER ATTACHMENT TYPE	CONCRETE ANCHOR ALLOWABLE VERTICAL LOAD Tac [1] LBS	ATR HANGER DIA. INCH	HILTI KH-EZ CONCRETE SCREW ANCHOR (ICC ESR-3027) SPECIAL INSPECTION REQ'D					
					DIA. da INCH	MIN EFF. EMBED. hef INCH	MIN HOLE DEPTH ho INCH	MIN SPACING Smin INCH	MIN END DIST. Cmin INCH	MAX INSTALL. TORQUE FT-LBS
38A TO 38K	1100	38A TO 38E	440	3/8	3/8	1 1/8	1 7/8	6 3/4	3 3/8	19
50A TO 50K	1100	50A TO 50E	440	1/2						
63A TO 63K	1100	63A TO 63E	440	5/8						
75A TO 75K	1100	75A TO 75E	440	3/4						
88A TO 88K	1100	88A TO 88E	440	7/8						
38A TO 38K	1100	38A TO 38K	1050	3/8	1/2	2 1/4	3 3/8	6 3/4	3 3/8	45
50A TO 50K	1100	50A TO 50K	1050	1/2						
63A TO 63K	1100	63A TO 63K	1050	5/8						
75A TO 75K	1100	75A TO 75K	1050	3/4						
88A TO 88K	1100	88A TO 88K	1050	7/8						
38A TO 38K	1100	38A TO 38M	1840	3/8	1/2	3 1/4	4 5/8	9 3/4	4 7/8	45
50A TO 50K	1100	50A TO 50M	1840	1/2						
63A TO 63K	1100	63A TO 63M	1840	5/8						
75A TO 75K	1100	75A TO 75M	1840	3/4						
88A TO 88K	1100	88A TO 88M	1840	7/8						

SEE DETAIL M0.00 FOR SECTION NOTES

[1] ALLOWABLE LOADS HAVE BEEN INCREASED BY A FACTOR OF 1.2 FOR LOAD COMBINATIONS INCLUDING OVERSTRENGTH, Ω_0, PER ASCE 7-10 SEC. 12.4.3.3.

[2] WHEN THE BOLT CENTERLINE DISTANCE EXCEEDS 13 7/8" FOR fw = 3 7/8" OR 14" FOR fw = 4 1/2", THE STRUT MUST BE ROTATED TO COMPLY TO THE DETAIL.

MASON WEST
1601 E. Miraloma Ave. Placentia, CA 92870
TEL (714) 630 - 0701, www.masonwest.com

Jiefu "Jeff" Zhang, SE
California SE No. S5270

PAGE
M2.71.1

HCAi OPM-0043 REVIEWED FOR CODE COMPLIANCE BY: William Staehlin DATE: 01/23/2023 FLORIDA BUILDING CODE, 2020

HANGER ATTACHMENT TO CONCRETE FILLED METAL DECK WITH (2) CONCRETE SCREW ANCHORS

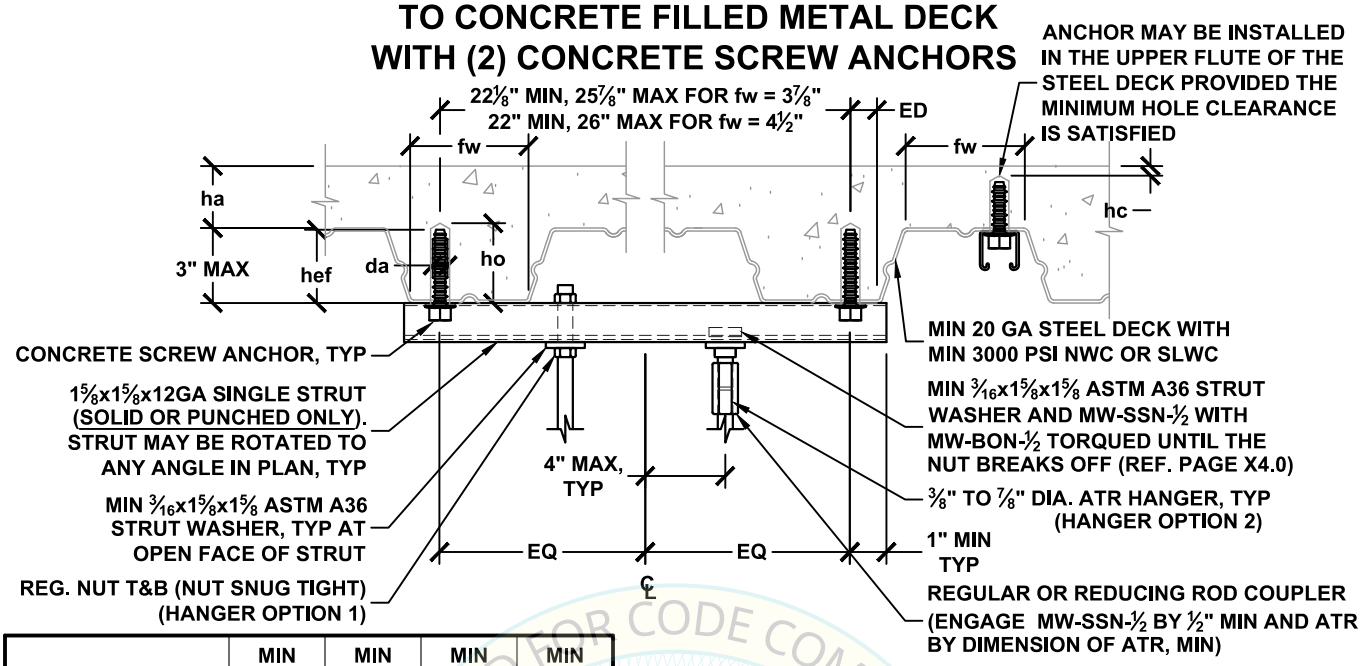

ANCHOR	MIN FLUTE WIDTH fw INCH	MIN EDGE DIST ED INCH	MIN CONC. COVER ha INCH	MIN HOLE CLEAR hc INCH
DEWALT/POWERS	3⅞	1	2½	¾
MASON	4½	1¼	1½	¾
HILTI	4½	1¼	3¼	1¼

HANGER ATTACHMENT TYPE	STEEL COMPONENT ALLOWABLE VERTICAL LOAD Ta LBS	HANGER ATTACHMENT TYPE	CONCRETE ANCHOR ALLOWABLE VERTICAL LOAD Tac [1] LBS	ATR HANGER DIA. INCH	DEWALT/POWERS SCREW-BOLT+ CONCRETE SCREW ANCHOR (ICC ESR-3889) SPECIAL INSPECTION REQ'D					
					DIA. da INCH	MIN EFF. EMBED. hef INCH	MIN HOLE DEPTH ho INCH	MIN SPACING Smin INCH	MIN END DIST. Cmin INCH	MAX INSTALL. TORQUE FT-LBS
38A TO 38G	640	38A TO 38K	1200	⅜	⅜	2½	3⅜	7½	3¾	40
50A TO 50G	640	50A TO 50K	1200	½						
63A TO 63G	640	63A TO 63K	1200	⅝						
75A TO 75G	640	75A TO 75K	1200	¾						
88A TO 88G	640	88A TO 88K	1200	⅞						
38A TO 38G	640	38A TO 38N	2420	⅜	½	3¼	4⅜	9¾	4⅞	60
50A TO 50G	640	50A TO 50N	2420	½						
63A TO 63G	640	63A TO 63N	2420	⅝						
75A TO 75G	640	75A TO 75N	2420	¾						
88A TO 88G	640	88A TO 88N	2420	⅞						

SEE DETAIL M0.00 FOR SECTION NOTES

[1] ALLOWABLE LOADS HAVE BEEN INCREASED BY A FACTOR OF 1.2 FOR LOAD COMBINATIONS INCLUDING OVERSTRENGTH, Ω_0, PER ASCE 7-10 SEC. 12.4.3.3.

[2] SEE PAGE M2.71.3 FOR ADDITIONAL ALLOWABLE LOAD TABLES.

REVIEWED FOR CODE COMPLIANCE
HCAi
OPM-0043
BY: William Staehlin
DATE: 1/23/2023
CALIFORNIA BUILDING CODE

MASON WEST
1601 E. Miraloma Ave. Placentia, CA 92870
TEL (714) 630 - 0701, www.masonwest.com

Jiefu "Jeff" Zhang, SE
California SE No. S5270

HANGER ATTACHMENT
TO CONCRETE FILLED METAL DECK
WITH (2) CONCRETE SCREW ANCHORS

HANGER ATTACHMENT TYPE	STEEL COMPONENT ALLOWABLE VERTICAL LOAD Ta LBS	HANGER ATTACHMENT TYPE	CONCRETE ANCHOR ALLOWABLE VERTICAL LOAD Tac [1] LBS	ATR HANGER DIA. INCH	MASON IND. N.Y. SAST CONCRETE SCREW ANCHOR (ICC ESR-2713) SPECIAL INSPECTION REQ'D					
					DIA. da INCH	MIN EFF. EMBED. hef INCH	MIN HOLE DEPTH ho INCH	MIN SPACING Smin INCH	MIN END DIST. Cmin INCH	MAX INSTALL. TORQUE FT-LBS
38A TO 38G	640	38A TO 38C	220	3/8	3/8	1 1/4	2 1/8	6 3/4	3 3/8	50
50A TO 50G	640	50A TO 50C	220	1/2						
63A TO 63G	640	63A TO 63C	220	5/8						
75A TO 75G	640	75A TO 75C	220	3/4						
88A TO 88G	640	88A TO 88C	220	7/8						
38A TO 38G	640	38A TO 38F	540	3/8	1/2	1 3/8	2 1/2	6 3/4	3 3/8	65
50A TO 50G	640	50A TO 50F	540	1/2						
63A TO 63G	640	63A TO 63F	540	5/8						
75A TO 75G	640	75A TO 75F	540	3/4						
88A TO 88G	640	88A TO 88F	540	7/8						

HANGER ATTACHMENT TYPE	STEEL COMPONENT ALLOWABLE VERTICAL LOAD Ta LBS	HANGER ATTACHMENT TYPE	CONCRETE ANCHOR ALLOWABLE VERTICAL LOAD Tac [1] LBS	ATR HANGER DIA. INCH	HILTI KH-EZ CONCRETE SCREW ANCHOR (ICC ESR-3027) SPECIAL INSPECTION REQ'D					
					DIA. da INCH	MIN EFF. EMBED. hef INCH	MIN HOLE DEPTH ho INCH	MIN SPACING Smin INCH	MIN END DIST. Cmin INCH	MAX INSTALL. TORQUE FT-LBS
38A TO 38G	640	38A TO 38F	480	3/8	3/8	1 1/8	1 7/8	6 3/4	3 3/8	19
50A TO 50G	640	50A TO 50F	480	1/2						
63A TO 63G	640	63A TO 63F	480	5/8						
75A TO 75G	640	75A TO 75F	480	3/4						
88A TO 88G	640	88A TO 88F	480	7/8						
38A TO 38G	640	38A TO 38K	1160	3/8	1/2	2 1/4	3 3/8	6 3/4	3 3/8	45
50A TO 50G	640	50A TO 50K	1160	1/2						
63A TO 63G	640	63A TO 63K	1160	5/8						
75A TO 75G	640	75A TO 75K	1160	3/4						
88A TO 88G	640	88A TO 88K	1160	7/8						
38A TO 38G	640	38A TO 38N	2020	3/8	1/2	3 1/4	4 5/8	9 3/4	4 7/8	45
50A TO 50G	640	50A TO 50N	2020	1/2						
63A TO 63G	640	63A TO 63N	2020	5/8						
75A TO 75G	640	75A TO 75N	2020	3/4						
88A TO 88G	640	88A TO 88N	2020	7/8						

SEE DETAIL M0.00 FOR SECTION NOTES

[1] ALLOWABLE LOADS HAVE BEEN INCREASED BY A FACTOR OF 1.2 FOR LOAD COMBINATIONS INCLUDING OVERSTRENGTH, Ω_0, PER ASCE 7-10 SEC. 12.4.3.3.

HCAi
OPM-0043
REVIEWED FOR CODE COMPLIANCE
BY William Staehlin
UPDATE: 01/23/2023
CALIFORNIA BUILDING CODE 2022

MASON WEST
1601 E. Miraloma Ave. Placentia, CA 92870
TEL (714) 630 - 0701, www.masonwest.com

Jiefu "Jeff" Zhang, SE
California SE No. S5270

HANGER ATTACHMENT TO CONCRETE FILLED METAL DECK WITH (2) CONCRETE SCREW ANCHORS

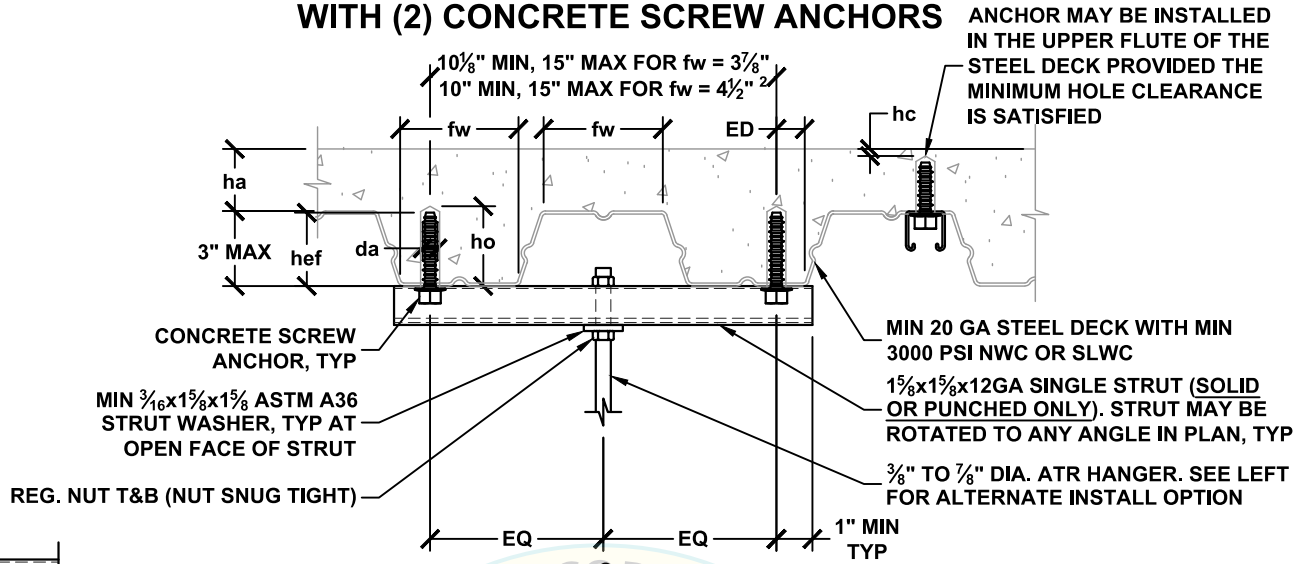

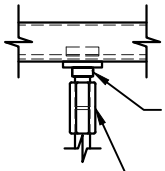

MIN 3⁄16x1⅝x1⅝ ASTM A36 STRUT WASHER AND MW-SSN-½ WITH MW-BON-½ TORQUED UNTIL THE NUT BREAKS OFF (REF. PAGE X4.0)

REGULAR OR REDUCING ROD COUPLER (ENGAGE MW-SSN-½ BY ½" MIN AND ATR BY DIMENSION OF ATR, MIN)

ALTERNATE HANGER INSTALL

ANCHOR	MIN FLUTE WIDTH fw INCH	MIN EDGE DIST ED INCH	MIN CONC. COVER ha INCH	MIN HOLE CLEAR hc INCH
DEWALT/POWERS	3⅞	1	2½	¾
MASON	4½	1¼	1½	¾
HILTI	4½	1¼	3¼	1¼

HANGER ATTACHMENT TYPE	STEEL COMPONENT ALLOWABLE VERTICAL LOAD Ta LBS	HANGER ATTACHMENT TYPE	CONCRETE ANCHOR ALLOWABLE VERTICAL LOAD Tac [1] LBS	ATR HANGER DIA. INCH	DEWALT/POWERS SCREW-BOLT+ CONCRETE SCREW ANCHOR (ICC ESR-3889) SPECIAL INSPECTION REQ'D					
					DIA. da INCH	MIN EFF. EMBED. hef INCH	MIN HOLE DEPTH ho INCH	MIN SPACING Smin INCH	MIN END DIST. Cmin INCH	MAX INSTALL. TORQUE FT-LBS
38A TO 38K	1100	38A TO 38M	1660	⅜	⅜	2½	3⅜	7½	3¾	40
50A TO 50K	1100	50A TO 50M	1660	½						
63A TO 63K	1100	63A TO 63M	1660	⅝						
75A TO 75K	1100	75A TO 75M	1660	¾						
88A TO 88K	1100	88A TO 88M	1660	⅞						
38A TO 38K	1100	38A TO 38P	3300	⅜	½	3¼	4⅜	9¾	4⅞	60
50A TO 50K	1100	50A TO 50P	3300	½						
63A TO 63K	1100	63A TO 63P	3300	⅝						
75A TO 75K	1100	75A TO 75P	3300	¾						
88A TO 88K	1100	88A TO 88P	3300	⅞						

SEE DETAIL M0.00 FOR SECTION NOTES

[1] ALLOWABLE LOADS HAVE BEEN INCREASED BY A FACTOR OF 1.2 FOR LOAD COMBINATIONS INCLUDING OVERSTRENGTH, Ω_0, PER ASCE 7-10 SEC. 12.4.3.3.

[2] WHEN THE BOLT CENTERLINE DISTANCE EXCEEDS 13⅞" FOR fw = 3⅞" OR 14" FOR fw = 4½", THE STRUT MUST BE ROTATED TO COMPLY TO THE DETAIL.

[3] SEE PAGE M2.71.5 FOR ADDITIONAL ALLOWABLE LOAD TABLES.

MASON WEST
1601 E. Miraloma Ave. Placentia, CA 92870
TEL (714) 630 - 0701, www.masonwest.com

Jiefu "Jeff" Zhang, SE
California SE No. S5270

PAGE
M2.71.4

REVIEWED FOR CODE COMPLIANCE HCAi OPM-0043 BY: William Staehlin DATE: 1/23/2023 CALIFORNIA BUILDING CODE

HANGER ATTACHMENT
TO CONCRETE FILLED METAL DECK
WITH (2) CONCRETE SCREW ANCHORS

HANGER ATTACHMENT TYPE	STEEL COMPONENT ALLOWABLE VERTICAL LOAD Ta LBS	HANGER ATTACHMENT TYPE	CONCRETE ANCHOR ALLOWABLE VERTICAL LOAD Tac [1] LBS	ATR HANGER DIA. INCH	MASON IND. N.Y. SAST CONCRETE SCREW ANCHOR (ICC ESR-2713) SPECIAL INSPECTION REQ'D					
					DIA. da INCH	MIN EFF. EMBED. hef INCH	MIN HOLE DEPTH ho INCH	MIN SPACING Smin INCH	MIN END DIST. Cmin INCH	MAX INSTALL. TORQUE FT-LBS
38A TO 38K	1100	38A TO 38F	300	3/8	3/8	1 1/4	2 1/8	6 3/4	3 3/8	50
50A TO 50K	1100	50A TO 50F	300	1/2						
63A TO 63K	1100	63A TO 63F	300	5/8						
75A TO 75K	1100	75A TO 75F	300	3/4						
88A TO 88K	1100	88A TO 88F	300	7/8						
38A TO 38K	1100	38A TO 38F	740	3/8	1/2	1 3/8	2 1/2	6 3/4	3 3/8	65
50A TO 50K	1100	50A TO 50F	740	1/2						
63A TO 63K	1100	63A TO 63F	740	5/8						
75A TO 75K	1100	75A TO 75F	740	3/4						
88A TO 88K	1100	88A TO 88F	740	7/8						

HANGER ATTACHMENT TYPE	STEEL COMPONENT ALLOWABLE VERTICAL LOAD Ta LBS	HANGER ATTACHMENT TYPE	CONCRETE ANCHOR ALLOWABLE VERTICAL LOAD Tac [1] LBS	ATR HANGER DIA. INCH	HILTI KH-EZ CONCRETE SCREW ANCHOR (ICC ESR-3027) SPECIAL INSPECTION REQ'D					
					DIA. da INCH	MIN EFF. EMBED. hef INCH	MIN HOLE DEPTH ho INCH	MIN SPACING Smin INCH	MIN END DIST. Cmin INCH	MAX INSTALL. TORQUE FT-LBS
38A TO 38K	1100	38A TO 38G	660	3/8	3/8	1 1/8	1 7/8	6 3/4	3 3/8	19
50A TO 50K	1100	50A TO 50G	660	1/2						
63A TO 63K	1100	63A TO 63G	660	5/8						
75A TO 75K	1100	75A TO 75G	660	3/4						
88A TO 88K	1100	88A TO 88G	660	7/8						
38A TO 38K	1100	38A TO 38L	1580	3/8	1/2	2 1/4	3 3/8	6 3/4	3 3/8	45
50A TO 50K	1100	50A TO 50L	1580	1/2						
63A TO 63K	1100	63A TO 63L	1580	5/8						
75A TO 75K	1100	75A TO 75L	1580	3/4						
88A TO 88K	1100	88A TO 88L	1580	7/8						
38A TO 38K	1100	38A TO 38P	2760	3/8	1/2	3 1/4	4 5/8	9 3/4	4 7/8	45
50A TO 50K	1100	50A TO 50P	2760	1/2						
63A TO 63K	1100	63A TO 63P	2760	5/8						
75A TO 75K	1100	75A TO 75P	2760	3/4						
88A TO 88K	1100	88A TO 88P	2760	7/8						

SEE DETAIL M0.00 FOR SECTION NOTES

[1] ALLOWABLE LOADS HAVE BEEN INCREASED BY A FACTOR OF 1.2 FOR LOAD COMBINATIONS INCLUDING OVERSTRENGTH, Ω_0, PER ASCE 7-10 SEC. 12.4.3.3.

[2] WHEN THE BOLT CENTERLINE DISTANCE EXCEEDS 13 7/8" FOR fw = 3 7/8" OR 14" FOR fw = 4 1/2", THE STRUT MUST BE ROTATED TO COMPLY TO THE DETAIL.

REVIEWED FOR CODE COMPLIANCE
HCAi
OPM-0043
BY: William Staehlin
DATE: 01/23/2023
CALIFORNIA BUILDING CODE, 2022

MASON WEST
1601 E. Miraloma Ave. Placentia, CA 92870
TEL (714) 630 - 0701, www.masonwest.com

Jiefu "Jeff" Zhang, SE
California SE No. S5270

HANGER ATTACHMENT
TO CONCRETE FILLED METAL DECK
WITH (1) CONCRETE SCREW ANCHOR

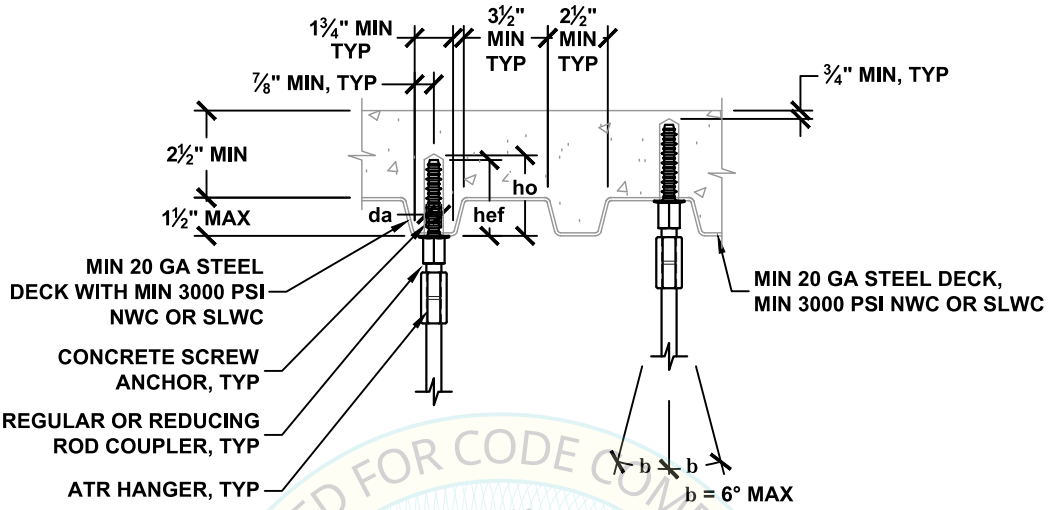

REVIEWED FOR CODE COMPLIANCE
HCAi
OPM-0043
BY: William Staehlin
DATE: 01/23/2023
CALIFORNIA BUILDING CODE 2022

HANGER ATTACHMENT TYPE	ALLOWABLE VERTICAL LOAD Ta [1,2] LBS	ATR HANGER DIA. INCH	DEWALT/POWERS HANGERMATE+ CONCRETE SCREW ANCHOR (ICC ESR-3889) SPECIAL INSPECTION REQ'D					
			DIA. da INCH	MIN EFF. EMBED. hef INCH	MIN HOLE DEPTH ho INCH	MIN SPACING Smin INCH	MIN EDGE Cmin INCH	MAX INSTALL. TORQUE FT-LBS
38A TO 38D	310	⅜	¼ W/ ⅜"Ø HEAD	2	2⅝	6	3	25
50A TO 50D	310	½						

SEE DETAIL M0.00 FOR SECTION NOTES

[1] ALLOWABLE LOADS HAVE BEEN INCREASED BY A FACTOR OF 1.2 FOR LOAD COMBINATIONS INCLUDING OVERSTRENGTH, Ω_0, PER ASCE 7-10 SEC. 12.4.3.3.

MASON WEST
1601 E. Miraloma Ave. Placentia, CA 92870
TEL (714) 630 - 0701, www.masonwest.com

Jiefu "Jeff" Zhang, SE
California SE No. S5270

PAGE
M2.72

HANGER ATTACHMENT
TO CONCRETE FILLED METAL DECK
WITH (2) CONCRETE SCREW ANCHORS

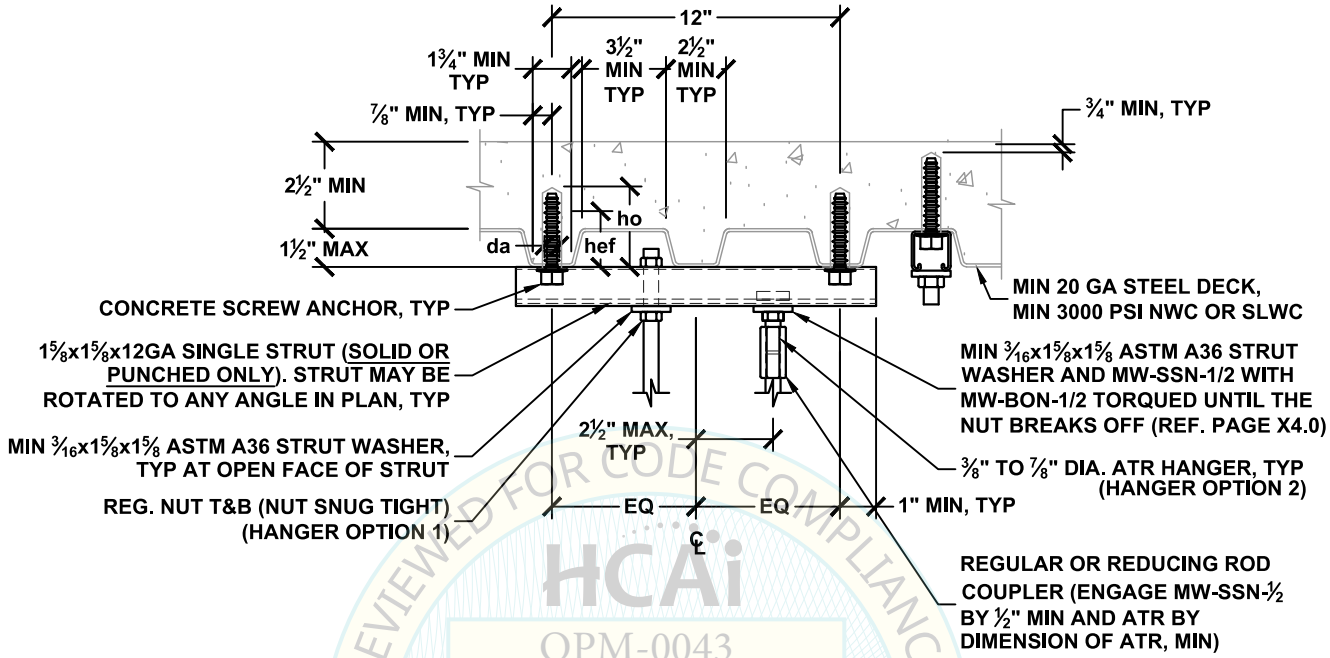

HCAi
OPM-0043
BY: William Staehlin
DATE: 1/23/2023
REVIEWED FOR CODE COMPLIANCE
CALIFORNIA BUILDING CODE

HANGER ATTACHMENT TYPE	STEEL COMPONENT ALLOWABLE VERTICAL LOAD Ta LBS	HANGER ATTACHMENT TYPE	CONCRETE ANCHOR ALLOWABLE VERTICAL LOAD Tac [1] LBS	ATR HANGER DIA. INCH	DEWALT/POWERS SCREW-BOLT+ CONCRETE SCREW ANCHOR (ICC ESR-3889) SPECIAL INSPECTION REQ'D					
					DIA. da INCH	MIN EFF. EMBED. hef INCH	MIN HOLE DEPTH ho INCH	MIN SPACING Smin INCH	MIN END DIST. Cmin INCH	MAX INSTALL. TORQUE FT-LBS
38A TO 38L	1380	38A TO 38K	1140	⅜	⅜	2½	3⅜	7½	3¾	40
50A TO 50L	1380	50A TO 50K	1140	½						
63A TO 63L	1380	63A TO 63K	1140	⅝						
75A TO 75L	1380	75A TO 75K	1140	¾						
88A TO 88L	1380	88A TO 88K	1140	⅞						
38A TO 38L	1380	38A TO 38H	730	⅜	½	1¾	2⅝	5¼	2⅝	45
50A TO 50L	1380	50A TO 50H	730	½						
63A TO 63L	1380	63A TO 63H	730	⅝						
75A TO 75L	1380	75A TO 75H	730	¾						
88A TO 88L	1380	88A TO 88H	730	⅞						

SEE DETAIL M0.00 FOR SECTION NOTES

[1] ALLOWABLE LOADS HAVE BEEN INCREASED BY A FACTOR OF 1.2 FOR LOAD COMBINATIONS INCLUDING OVERSTRENGTH, Ω_0, PER ASCE 7-10 SEC. 12.4.3.3.

MASON WEST
1601 E. Miraloma Ave. Placentia, CA 92870
TEL (714) 630 - 0701, www.masonwest.com

Jiefu "Jeff" Zhang, SE
California SE No. S5270

HANGER ATTACHMENT
TO CONCRETE FILLED METAL DECK
WITH (2) CONCRETE SCREW ANCHORS

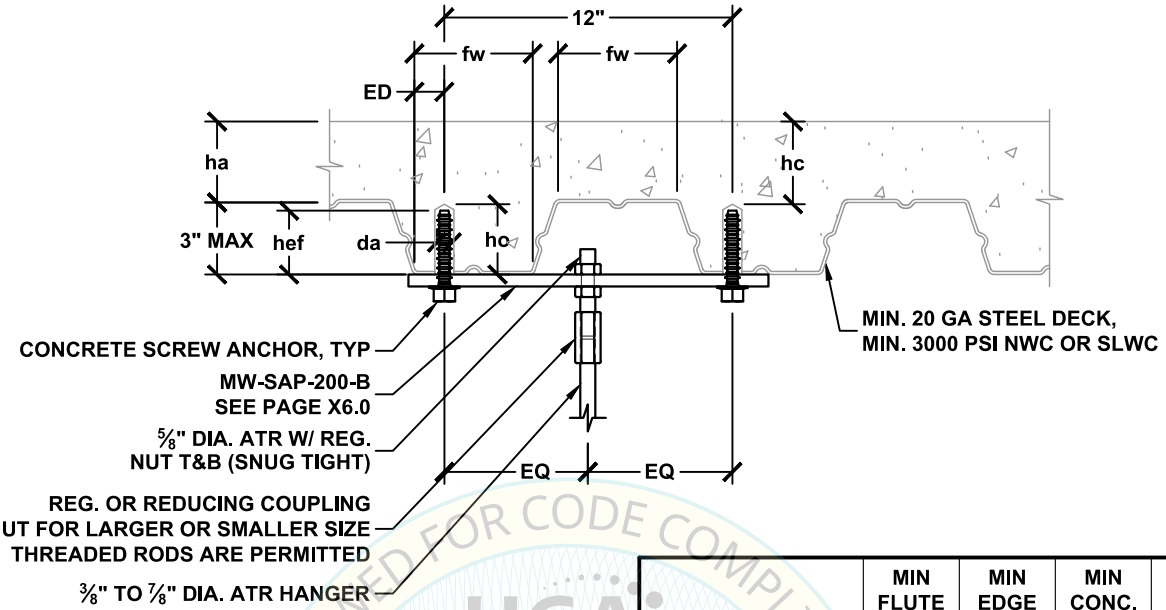

ANCHOR	MIN FLUTE WIDTH fw INCH	MIN EDGE DIST ED INCH	MIN CONC. COVER ha INCH	MIN HOLE CLEAR hc INCH
DEWALT/POWERS	3⅞	1	2½	¾
HILTI	4½	1¼	3¼	1¼

HANGER ATTACHMENT TYPE	STEEL COMPONENT ALLOWABLE VERTICAL LOAD Ta LBS	HANGER ATTACHMENT TYPE	CONCRETE ANCHOR ALLOWABLE VERTICAL LOAD Tac [1] LBS	ATR HANGER DIA. INCH	DEWALT/POWERS SCREW-BOLT+ CONCRETE SCREW ANCHOR (ICC ESR-3889) SPECIAL INSPECTION REQ'D					
					DIA. da INCH	MIN EFF. EMBED. hef INCH	MIN HOLE DEPTH ho INCH	MIN SPACING Smin INCH	MIN END DIST. Cmin INCH	MAX INSTALL. TORQUE FT-LBS
38A TO 38M	1930	38A TO 38L	1420	⅜	⅝	2⅞	4⅛	8⅝	4⁵⁄₁₆	60
50A TO 50M	1930	50A TO 50L	1420	½						
63A TO 63M	1930	63A TO 63L	1420	⅝						
75A TO 75M	1930	75A TO 75L	1420	¾						
88A TO 88M	1930	88A TO 88L	1420	⅞						
38A TO 38M	1930	38A TO 38M	1980	⅜	⅝	3¾	5⅛	11¼	5⅝	60
50A TO 50M	1930	50A TO 50M	1980	½						
63A TO 63M	1930	63A TO 63M	1980	⅝						
75A TO 75M	1930	75A TO 75M	1980	¾						
88A TO 88M	1930	88A TO 88M	1980	⅞						

SEE DETAIL M0.00 FOR SECTION NOTES

[1] ALLOWABLE LOADS HAVE BEEN INCREASED BY A FACTOR OF 1.2 FOR LOAD COMBINATIONS INCLUDING OVERSTRENGTH, Ω_0, PER ASCE 7-10 SEC. 12.4.3.3.

[2] SEE PAGE M2.74.1 FOR ADDITIONAL ALLOWABLE LOAD TABLES.

MASON WEST
1601 E. Miraloma Ave. Placentia, CA 92870
TEL (714) 630 - 0701, www.masonwest.com

Jiefu "Jeff" Zhang, SE
California SE No. S5270

PAGE
M2.74

REVIEWED FOR CODE COMPLIANCE
HCAi
OPM-0043
BY: William Staehlin
DATE: 01/23/2023
CALIFORNIA BUILDING CODE 2022

HANGER ATTACHMENT
TO CONCRETE FILLED METAL DECK
WITH (2) CONCRETE SCREW ANCHORS

HANGER ATTACHMENT TYPE	STEEL COMPONENT ALLOWABLE VERTICAL LOAD Ta LBS	HANGER ATTACHMENT TYPE	CONCRETE ANCHOR ALLOWABLE VERTICAL LOAD Tac [1] LBS	ATR HANGER DIA. INCH	HILTI KH-EZ CONCRETE SCREW ANCHOR (ICC ESR-3027) SPECIAL INSPECTION REQ'D					
					DIA. da INCH	MIN EFF. EMBED. hef INCH	MIN HOLE DEPTH ho INCH	MIN SPACING Smin INCH	MIN END DIST. Cmin INCH	MAX INSTALL. TORQUE FT-LBS
38A TO 38M	1930	38A TO 38N	2160	3/8	5/8	2 1/2	3 5/8	7 1/2	3 3/4	85
50A TO 50M	1930	50A TO 50N	2160	1/2						
63A TO 63M	1930	63A TO 63N	2160	5/8						
75A TO 75M	1930	75A TO 75N	2160	3/4						
88A TO 88M	1930	88A TO 88N	2160	7/8						
38A TO 38M	1930	38A TO 38Q	4900	3/8	5/8	3 7/8	5 3/8	11 5/8	5 13/16	85
50A TO 50M	1930	50A TO 50Q	4900	1/2						
63A TO 63M	1930	63A TO 63Q	4900	5/8						
75A TO 75M	1930	75A TO 75Q	4900	3/4						
88A TO 88M	1930	88A TO 88Q	4900	7/8						

SEE DETAIL M0.00 FOR SECTION NOTES

[1] ALLOWABLE LOADS HAVE BEEN INCREASED BY A FACTOR OF 1.2 FOR LOAD COMBINATIONS INCLUDING OVERSTRENGTH, Ω_0, PER ASCE 7-10 SEC. 12.4.3.3.

REVIEWED FOR CODE COMPLIANCE
HCAi
OPM-0043
BY: William Staehlin
DATE: 01/23/2023
CALIFORNIA BUILDING CODE, 2022

MASON WEST
1601 E. Miraloma Ave. Placentia, CA 92870
TEL (714) 630 - 0701, www.masonwest.com

Jiefu "Jeff" Zhang, SE
California SE No. S5270

PAGE
M2.74.1

HANGER ATTACHMENT
TO CONCRETE FILLED METAL DECK
WITH (4) CONCRETE SCREW ANCHORS

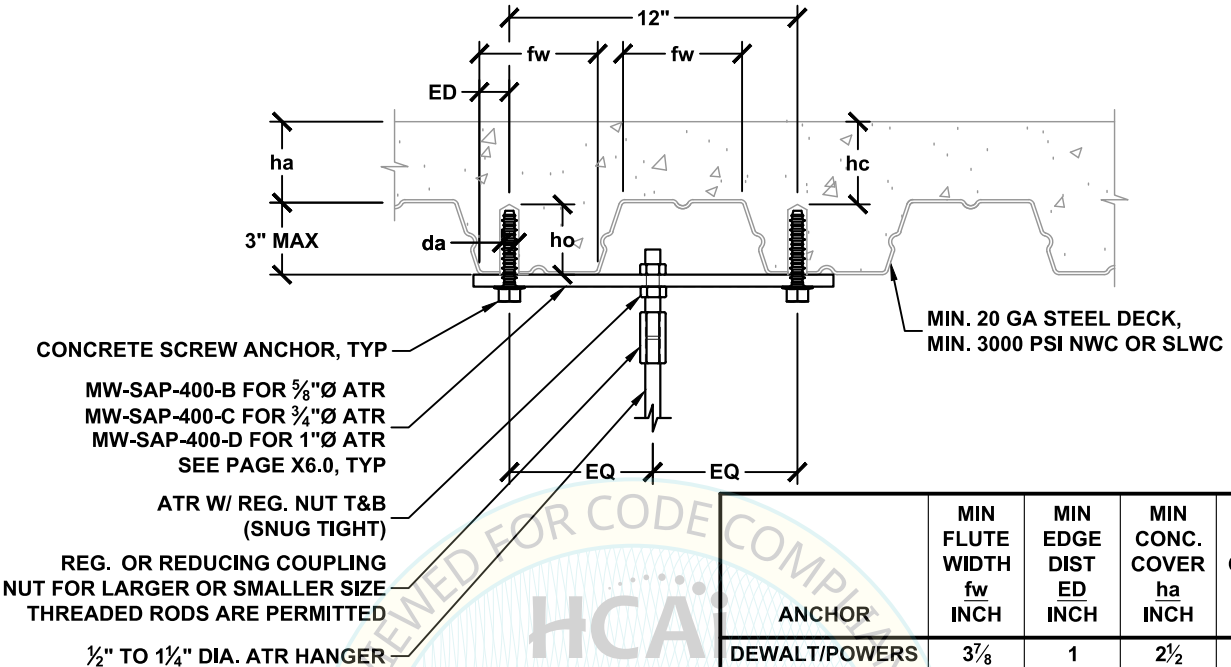

ANCHOR	MIN FLUTE WIDTH fw INCH	MIN EDGE DIST ED INCH	MIN CONC. COVER ha INCH	MIN HOLE CLEAR hc INCH
DEWALT/POWERS	3⅞	1	2½	¾
HILTI	4½	1¼	3¼	1¼

HANGER ATTACHMENT TYPE	STEEL COMPONENT ALLOWABLE VERTICAL LOAD Ta LBS	HANGER ATTACHMENT TYPE	CONCRETE ANCHOR ALLOWABLE VERTICAL LOAD Tac [1] LBS	ATR HANGER DIA. INCH	DEWALT/POWERS SCREW-BOLT+ CONCRETE SCREW ANCHOR (ICC ESR-3889) SPECIAL INSPECTION REQ'D					
					DIA. da INCH	MIN EFF. EMBED. hef INCH	MIN HOLE DEPTH ho INCH	MIN SPACING Smin INCH	MIN END DIST. Cmin INCH	MAX INSTALL. TORQUE FT-LBS
50A TO 50Q	3600	50A TO 50P	2840	½	⅝	2⅞	4⅛	8⅝	4 5/16	60
63A TO 63Q	3600	63A TO 63P	2840	⅝						
75A TO 75Q	3500	75A TO 75P	2840	¾						
88A TO 88Q	3500	88A TO 88P	2840	⅞						
100A TO 100Q	3500	100A TO 100P	2840	1						
125A TO 125Q	3500	125A TO 125P	2840	1¼						
50A TO 50Q	3600	50A TO 50Q	3960	½	⅝	3¾	5⅛	11¼	5⅝	60
63A TO 63Q	3600	63A TO 63Q	3960	⅝						
75A TO 75Q	3500	75A TO 75Q	3960	¾						
88A TO 88Q	3500	88A TO 88Q	3960	⅞						
100A TO 100Q	3500	100A TO 100Q	3960	1						
125A TO 125Q	3500	125A TO 125Q	3960	1¼						

SEE DETAIL M0.00 FOR SECTION NOTES

[1] ALLOWABLE LOADS HAVE BEEN INCREASED BY A FACTOR OF 1.2 FOR LOAD COMBINATIONS INCLUDING OVERSTRENGTH, Ω_0, PER ASCE 7-10 SEC. 12.4.3.3.

[2] SEE PAGE M2.75.1 FOR ADDITIONAL ALLOWABLE LOAD TABLES.

REVIEWED FOR CODE COMPLIANCE
HCAi
OPM-0043
BY: William Staehlin
DATE: 01/23/2023
CONFORMS TO 2019 CBC BUILDING CODE

MASON WEST
1601 E. Miraloma Ave. Placentia, CA 92870
TEL (714) 630 - 0701, www.masonwest.com

Jiefu "Jeff" Zhang, SE
California SE No. S5270

HANGER ATTACHMENT
TO CONCRETE FILLED METAL DECK
WITH (4) CONCRETE SCREW ANCHORS

HANGER ATTACHMENT TYPE	STEEL COMPONENT ALLOWABLE VERTICAL LOAD Ta LBS	HANGER ATTACHMENT TYPE	CONCRETE ANCHOR ALLOWABLE VERTICAL LOAD Tac [1] LBS	ATR HANGER DIA. INCH	HILTI KH-EZ CONCRETE SCREW ANCHOR (ICC ESR-3027) SPECIAL INSPECTION REQ'D					
					DIA. da INCH	MIN EFF. EMBED. hef INCH	MIN HOLE DEPTH ho INCH	MIN SPACING Smin INCH	MIN END DIST. Cmin INCH	MAX INSTALL. TORQUE FT-LBS
50A TO 50Q	3600	50A TO 50R	4320	1/2	5/8	2 1/2	3 5/8	7 1/2	3 3/4	85
63A TO 63Q	3600	63A TO 63R	4320	5/8						
75A TO 75Q	3500	75A TO 75R	4320	3/4						
88A TO 88Q	3500	88A TO 88R	4320	7/8						
100A TO 100Q	3500	100A TO 100R	4320	1						
125A TO 125Q	3500	125A TO 125R	4320	1 1/4						
50A TO 50Q	3600	50A TO 50R	9800	1/2	5/8	3 7/8	5 3/8	11 5/8	5 13/16	85
63A TO 63Q	3600	63A TO 63R	9800	5/8						
75A TO 75Q	3500	75A TO 75R	9800	3/4						
88A TO 88Q	3500	88A TO 88R	9800	7/8						
100A TO 100Q	3500	100A TO 100R	9800	1						
125A TO 125Q	3500	125A TO 125R	9800	1 1/4						

SEE DETAIL M0.00 FOR SECTION NOTES

[1] ALLOWABLE LOADS HAVE BEEN INCREASED BY A FACTOR OF 1.2 FOR LOAD COMBINATIONS INCLUDING OVERSTRENGTH, Ω_0, PER ASCE 7-10 SEC. 12.4.3.3.

REVIEWED FOR CODE COMPLIANCE
HCAi
OPM-0043
BY: William Staehlin
DATE: 01/23/2023
CALIFORNIA BUILDING CODE, 2022

MASON WEST
1601 E. Miraloma Ave. Placentia, CA 92870
TEL (714) 630 - 0701, www.masonwest.com

Jiefu "Jeff" Zhang, SE
California SE No. S5270

PAGE
M2.75.1

HANGER ATTACHMENT
TO CONCRETE FILLED METAL DECK
WITH (1) HILTI KCM-MD-SP/LP CONCRETE INSERT

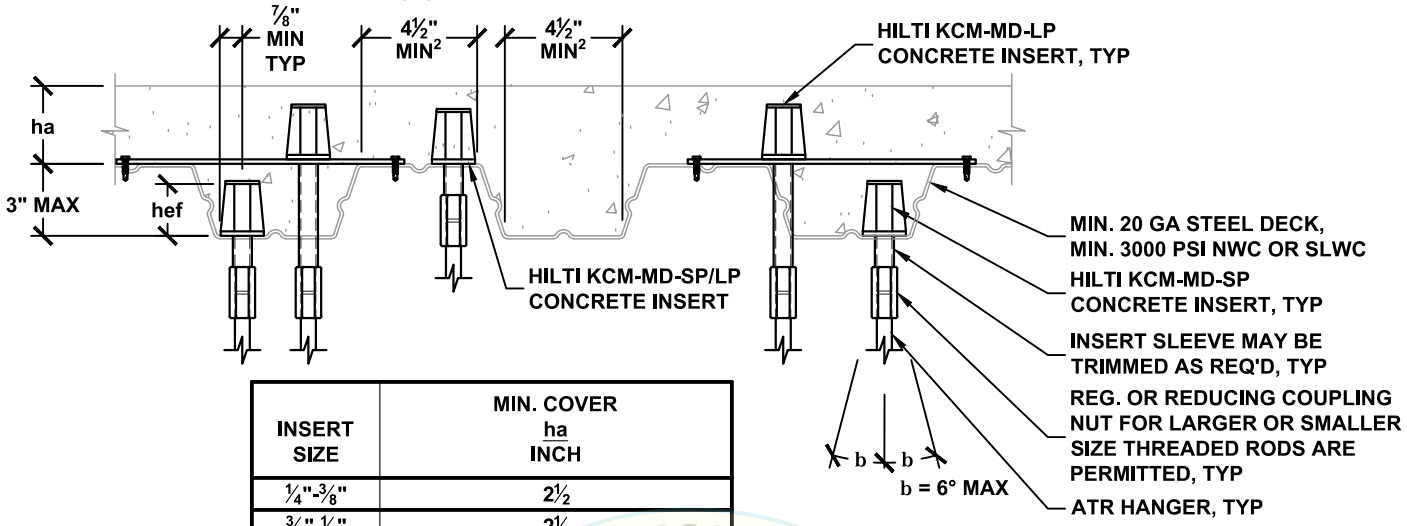

INSERT SIZE	MIN. COVER ha INCH
¼"-⅜"	2½
⅜"-½"	2½
⅜"-½"-⅝"	SP @ LOWER FLUTE = 2½ SP @ UPPER FLUTE = 3¼
⅝"-¾"	SP @ LOWER FLUTE = 2½ SP @ UPPER FLUTE = 3¼ LP @ EITHER FLUTE = 3¼

HANGER ATTACHMENT TYPE	ALLOWABLE VERTICAL LOAD Ta [1] LBS	ATR HANGER DIA. INCH	HILTI KCM-MD-SP/LP CONCRETE INSERT (ICC ESR-4145) SPECIAL INSPECTION REQ'D			
			INSERT SIZE	MIN. EFF. EMBED hef INCH	MIN. SPACING Smin INCH	MIN. END DIST. Cmin INCH
38A TO 38G	660	⅜	¼"-⅜"	1¾	5½	2¾
38A TO 38J	870	⅜	⅜"-½"	2	6	3
50A TO 50J	870	½				
63A TO 63J	870	⅝				
38A TO 38J	990	⅜	⅜"-½"-⅝"	2½	7½	3¾
50A TO 50J	990	½				
63A TO 63J	990	⅝				
75A TO 75J	990	¾				
50A TO 50J	990	½	⅝"-¾"	2½	7½	3¾
63A TO 63J	990	⅝				
75A TO 75J	990	¾				
88A TO 88J	990	⅞				

SEE DETAIL M0.00 FOR SECTION NOTES

[1] ALLOWABLE LOADS HAVE BEEN INCREASED BY A FACTOR OF 1.2 FOR LOAD COMBINATIONS INCLUDING OVERSTRENGTH, Ω_0, PER ASCE 7-10 SEC. 12.14.3.2.3.

[2] MIN. FLUTE WIDTH MAY BE REDUCED TO 3⅞" MIN. FOR INSERT INSTALLED OVER UPPER FLUTE OR KCM-MD-SP ¼"-⅜", KCM-MD-SP ⅜"-½", KCM-MD-LP ⅜"-½", OR KCM-MD-LP ⅝"-¾" INSTALLED OVER LOWER FLUTE.

REVIEWED FOR CODE COMPLIANCE
OPM-0043
BY: William Staehlin
DATE: 01/23/2023
CALIFORNIA BUILDING CODE, 2019

MASON WEST
1601 E. Miraloma Ave. Placentia, CA 92870
TEL (714) 630 - 0701, www.masonwest.com

Jiefu "Jeff" Zhang, SE
California SE No. S5270

PAGE
M2.80

HANGER ATTACHMENT
TO CONCRETE FILLED METAL DECK
WITH (1) HILTI KCM-MD-SP/LP CONCRETE INSERT AT UPPER FLUTE

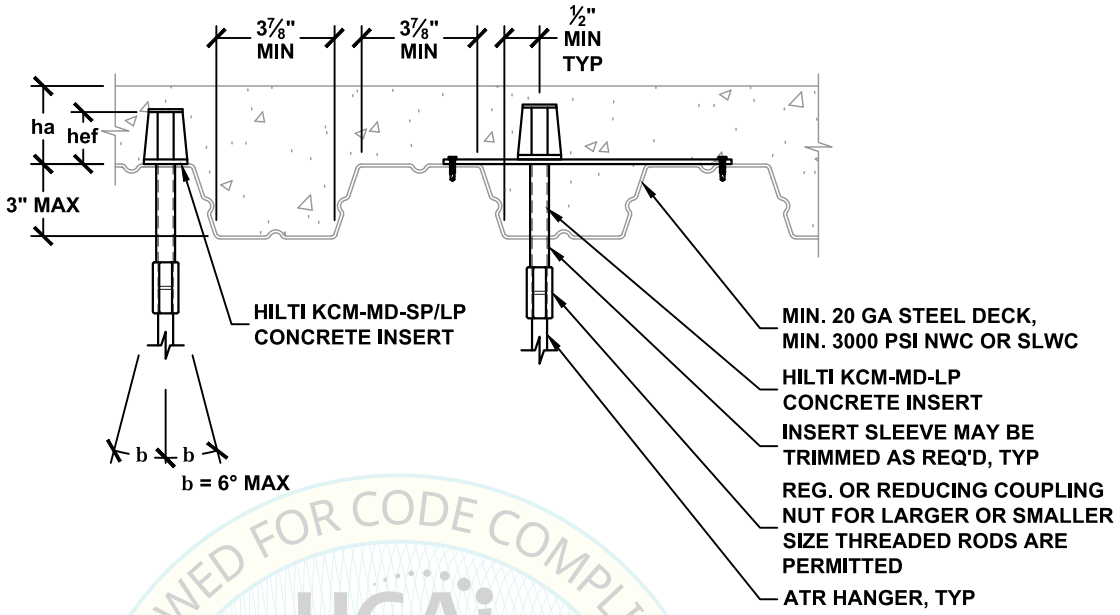

HANGER ATTACHMENT TYPE	ALLOWABLE VERTICAL LOAD Ta [1] LBS	ATR HANGER DIA. INCH	HILTI KCM-MD-SP/LP CONCRETE INSERT (ICC ESR-4145) SPECIAL INSPECTION REQ'D				
			INSERT SIZE	MIN. EFF. EMBED hef INCH	MIN. COVER ha INCH	MIN. SPACING Smin INCH	MIN. END DIST. Cmin INCH
38A TO 38L	1360	⅜	¼"-⅜"	1¾	2½	5½	2¾
38A TO 38M	1690	⅜	⅜"-½"	2	2½	6	3
50A TO 50M	1690	½					
63A TO 63M	1690	⅝					
38A TO 38N	2140	⅜	⅜"-½"-⅝"	2½	3¼	7½	3¾
50A TO 50N	2140	½					
63A TO 63N	2140	⅝					
75A TO 75N	2140	¾					
50A TO 50N	2140	½	⅝"-¾"	2½	3¼	7½	3¾
63A TO 63N	2140	⅝					
75A TO 75N	2140	¾					
88A TO 88N	2140	⅞					

SEE DETAIL M0.00 FOR SECTION NOTES

[1] ALLOWABLE LOADS HAVE BEEN INCREASED BY A FACTOR OF 1.2 FOR LOAD COMBINATIONS INCLUDING OVERSTRENGTH, Ω_0, PER ASCE 7-10 SEC. 12.14.3.2.3.

HCAi
OPM-0043
REVIEWED FOR CODE COMPLIANCE BY William Staehlin
DATE: 01/23/2023
CALIFORNIA BUILDING CODE, 2022

MASON WEST
1601 E. Miraloma Ave. Placentia, CA 92870
TEL (714) 630 - 0701, www.masonwest.com

Jiefu "Jeff" Zhang, SE
California SE No. S5270

PAGE
M2.80.1

HANGER ATTACHMENT
TO CONCRETE FILLED METAL DECK
WITH (1) DEWALT/POWERS BANG-IT+ CONCRETE INSERT

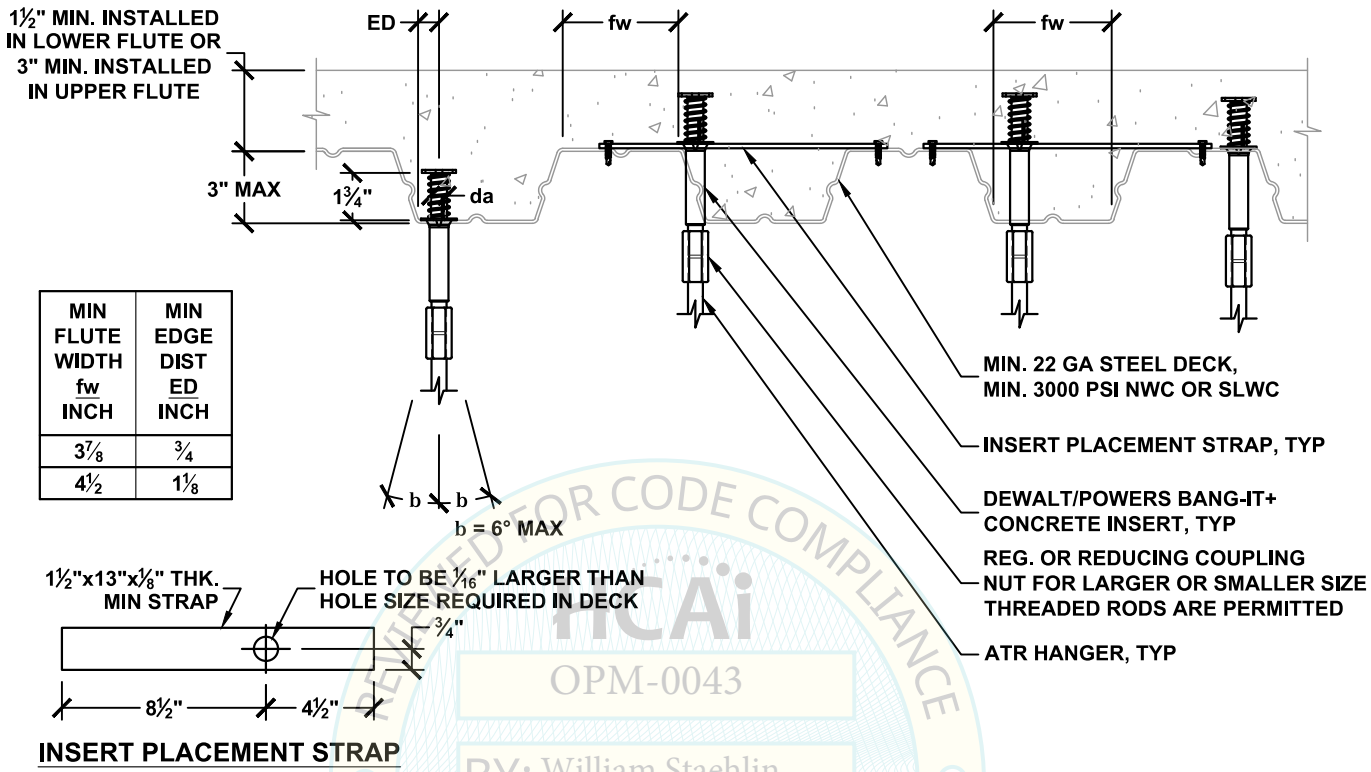

MIN FLUTE WIDTH fw INCH	MIN EDGE DIST ED INCH
3⅞	¾
4½	1⅛

INSERT PLACEMENT STRAP

ICC-ES
OPM-0043
BY: William Staehlin
DATE: 01/23/2023
REVIEWED FOR CODE COMPLIANCE
CALIFORNIA BUILDING CODE

HANGER ATTACHMENT TYPE	ALLOWABLE VERTICAL LOAD Ta [1] LBS	ATR HANGER DIA. INCH	DEWALT/POWERS BANG-IT+ CONCRETE INSERT (ICC ESR-3657) SPECIAL INSPECTION REQ'D		
			DIA. da INCH	MIN. SPACING Smin INCH	MIN. END DIST. Cmin INCH
38A TO 38G	580	⅜	0.7 (⅜"Ø)	5¼	2⅝
38A TO 38G	580	⅜	0.7 (½"Ø)	5¼	2⅝
50A TO 50G	580	½			
63A TO 63G	580	⅝			
50A TO 50G	580	½	1.0 (⅝"Ø)	5¼	2⅝
63A TO 63G	580	⅝			
75A TO 75G	580	¾			
63A TO 63G	580	⅝	1.0 (¾"Ø)	5¼	2⅝
75A TO 75G	580	¾			
88A TO 88G	580	⅞			

SEE DETAIL M0.00 FOR SECTION NOTES

[1] ALLOWABLE LOADS HAVE BEEN INCREASED BY A FACTOR OF 1.2 FOR LOAD COMBINATIONS INCLUDING OVERSTRENGTH, Ω_0, PER ASCE 7-10 SEC. 12.4.3.3.

MASON WEST
1601 E. Miraloma Ave. Placentia, CA 92870
TEL (714) 630 - 0701, www.masonwest.com

Jiefu "Jeff" Zhang, SE
California SE No. S5270

PAGE
M2.90

HANGER ATTACHMENT
TO CONCRETE FILLED METAL DECK
WITH (2) DEWALT/POWERS BANG-IT+ CONCRETE INSERT AT LOWER FLUTE

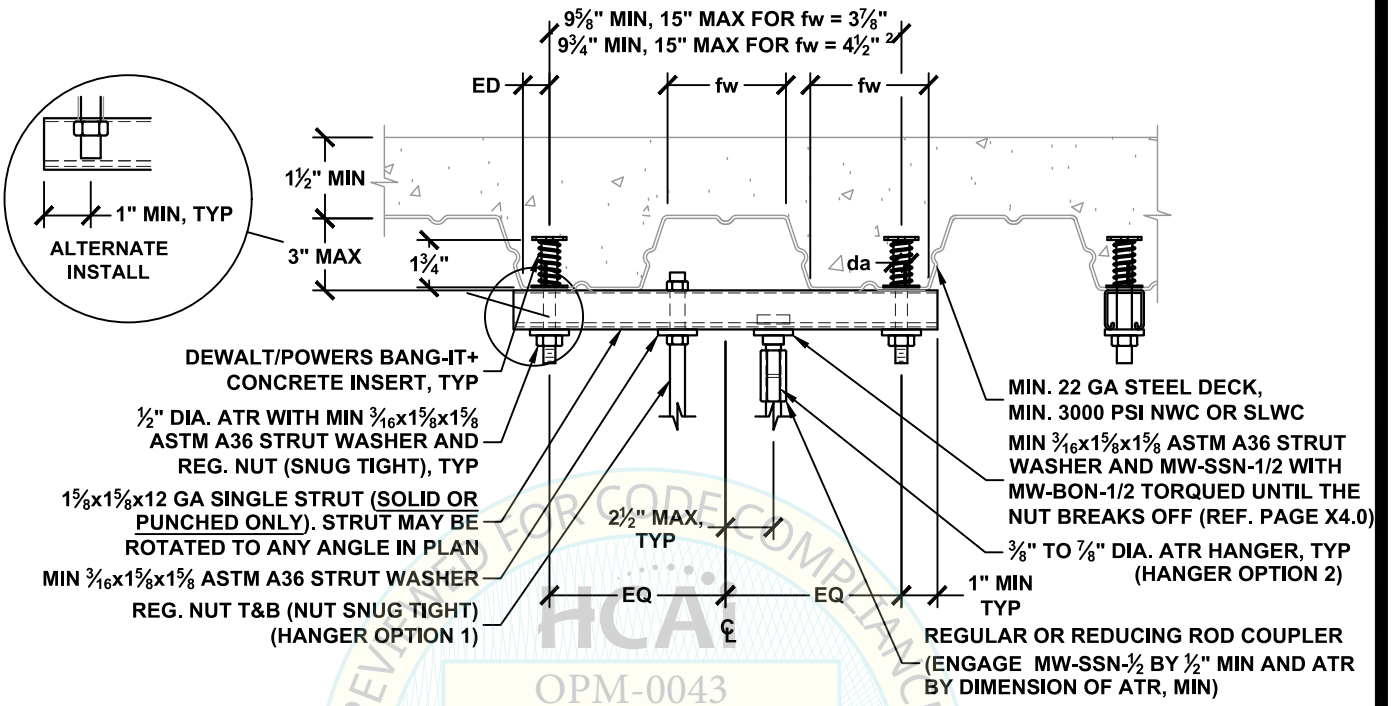

MIN FLUTE WIDTH fw INCH	MIN EDGE DIST ED INCH
3⅞	¾
4½	1⅛

HANGER ATTACHMENT TYPE	STEEL COMPONENT ALLOWABLE VERTICAL LOAD Ta LBS	HANGER ATTACHMENT TYPE	CONCRETE INSERT ALLOWABLE VERTICAL LOAD Tac [1] LBS	ATR HANGER DIA. INCH	DEWALT/POWERS BANG-IT+ CONCRETE INSERT (ICC ESR-3657) SPECIAL INSPECTION REQ'D		
					DIA. da INCH	MIN. SPACING Smin INCH	MIN. END DIST. Cmin INCH
38A TO 38K	1100	38A TO 38H	770	⅜	0.7 (½"Ø)	5¼	2⅝
50A TO 50K	1100	50A TO 50H	770	½			
63A TO 63K	1100	63A TO 63H	770	⅝			
75A TO 75K	1100	75A TO 75H	770	¾			
88A TO 88K	1100	88A TO 88H	770	⅞			

SEE DETAIL M0.00 FOR SECTION NOTES

[1] ALLOWABLE LOADS HAVE BEEN INCREASED BY A FACTOR OF 1.2 FOR LOAD COMBINATIONS INCLUDING OVERSTRENGTH, Ω_0, PER ASCE 7-10 SEC. 12.4.3.3.

[2] WHEN THE BOLT CENTERLINE DISTANCE EXCEEDS 14⅜" FOR fw = 3⅞" OR 14¼" FOR fw = 4½", THE STRUT MUST BE ROTATED TO COMPLY TO THE DETAIL.

HCAI
OPM-0043
BY: William Staehlin
DATE: 01/23/2023
REVIEWED FOR CODE COMPLIANCE
CALIFORNIA BUILDING CODE, 2022

MASON WEST
1601 E. Miraloma Ave. Placentia, CA 92870
TEL (714) 630 - 0701, www.masonwest.com

Jiefu "Jeff" Zhang, SE
California SE No. S5270

HANGER ATTACHMENT
TO CONCRETE FILLED METAL DECK
WITH (2) DEWALT/POWERS BANG-IT+ CONCRETE INSERT AT LOWER FLUTE

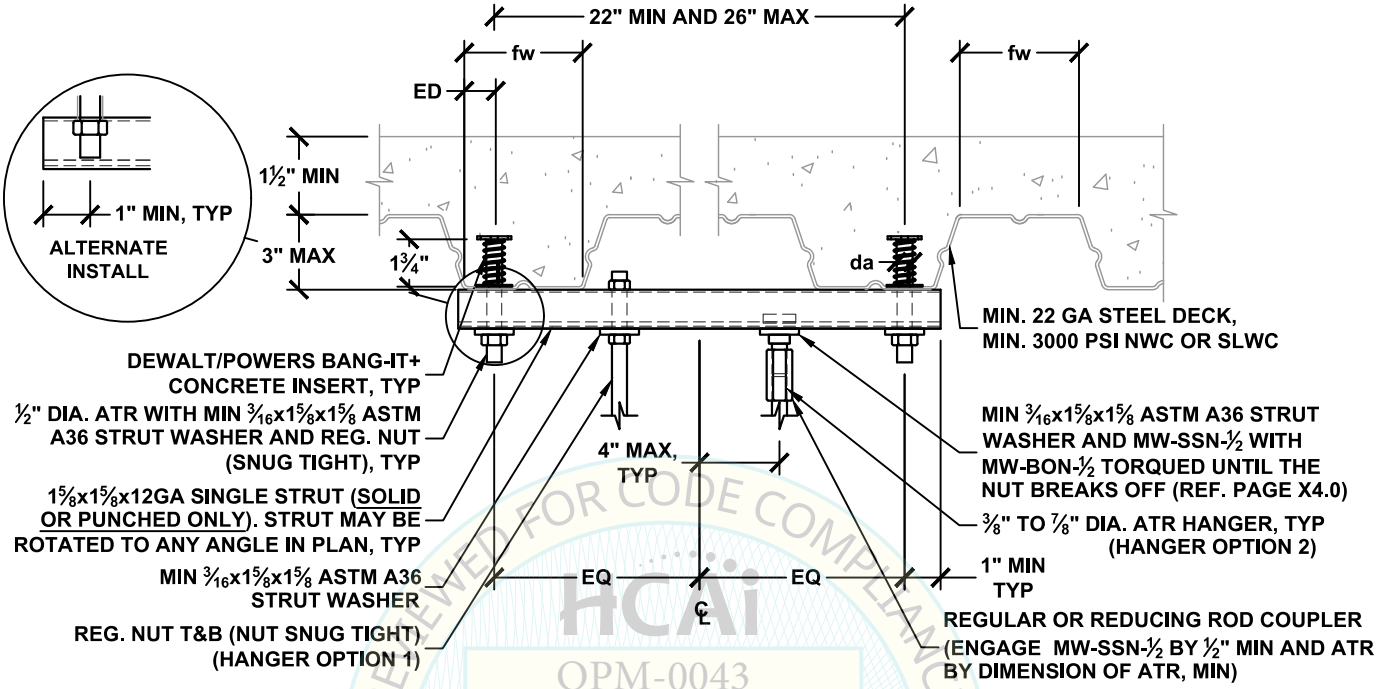

MIN FLUTE WIDTH fw INCH	MIN EDGE DIST ED INCH
3⅞	¾
4½	1⅛

HANGER ATTACHMENT TYPE	STEEL COMPONENT ALLOWABLE VERTICAL LOAD Ta LBS	HANGER ATTACHMENT TYPE	CONCRETE INSERT ALLOWABLE VERTICAL LOAD Tac [1] LBS	ATR HANGER DIA. INCH	DEWALT/POWERS BANG-IT+ CONCRETE INSERT (ICC ESR-3657) SPECIAL INSPECTION REQ'D		
					DIA. da INCH	MIN. SPACING Smin INCH	MIN. END DIST. Cmin INCH
38A TO 38G	640	38A TO 38J	850	⅜	0.7 (½"Ø)	5¼	2⅝
50A TO 50G	640	50A TO 50J	850	½			
63A TO 63G	640	63A TO 63J	850	⅝			
75A TO 75G	640	75A TO 75J	850	¾			
88A TO 88G	640	88A TO 88J	850	⅞			

SEE DETAIL M0.00 FOR SECTION NOTES

[1] ALLOWABLE LOADS HAVE BEEN INCREASED BY A FACTOR OF 1.2 FOR LOAD COMBINATIONS INCLUDING OVERSTRENGTH, Ω_0, PER ASCE 7-10 SEC. 12.4.3.3.

REVIEWED FOR CODE COMPLIANCE
HCAi
OPM-0043
BY: William Staehlin
DATE: 01/23/2023
CALIFORNIA BUILDING CODE, 2022

MASON WEST
1601 E. Miraloma Ave. Placentia, CA 92870
TEL (714) 630 - 0701, www.masonwest.com

Jiefu "Jeff" Zhang, SE
California SE No. S5270

PAGE
M2.91.1

HANGER ATTACHMENT
TO CONCRETE FILLED METAL DECK
WITH (2) DEWALT/POWERS BANG-IT+ CONCRETE INSERT AT LOWER FLUTE

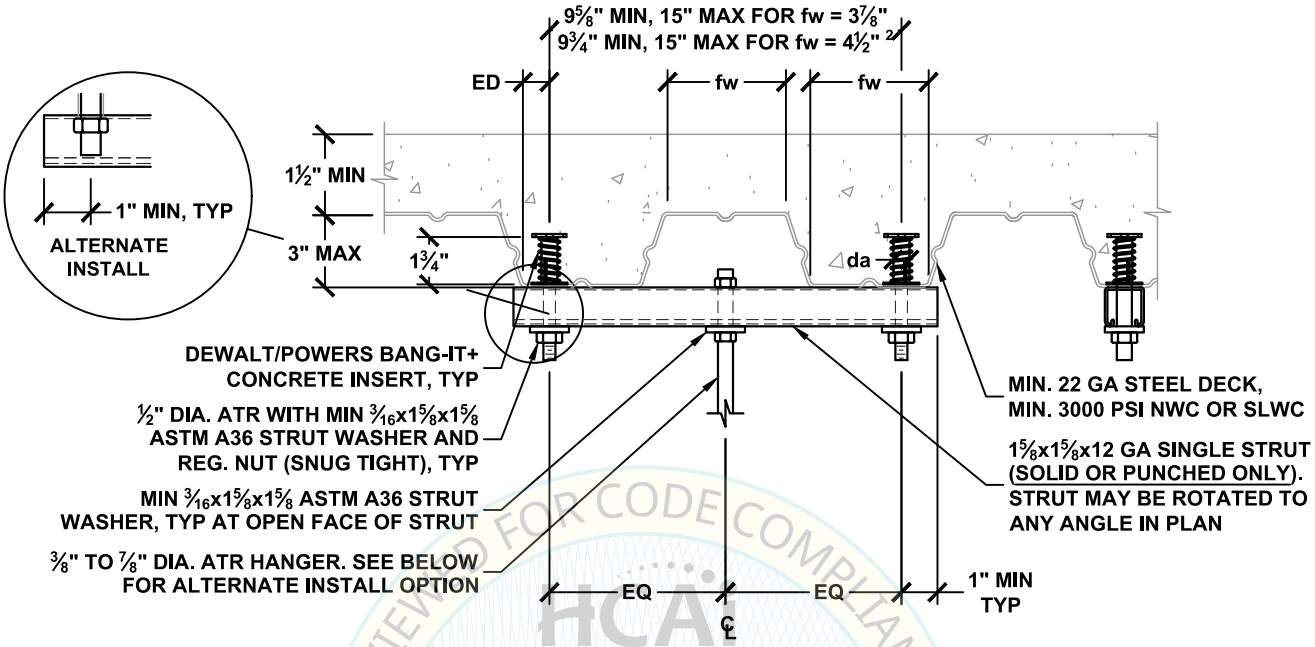

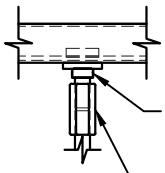

MIN 3/16x1⅝x1⅝ ASTM A36 STRUT WASHER AND MW-SSN-½ WITH MW-BON-½ TORQUED UNTIL THE NUT BREAKS OFF (REF. PAGE X4.0)

REGULAR OR REDUCING ROD COUPLER (ENGAGE MW-SSN-½ BY ½" MIN AND ATR BY DIMENSION OF ATR, MIN)

ALTERNATE HANGER INSTALL

MIN FLUTE WIDTH fw INCH	MIN EDGE DIST ED INCH
3⅞	¾
4½	1⅛

HANGER ATTACHMENT TYPE	STEEL COMPONENT ALLOWABLE VERTICAL LOAD Ta LBS	HANGER ATTACHMENT TYPE	CONCRETE INSERT ALLOWABLE VERTICAL LOAD Tac [1] LBS	ATR HANGER DIA. INCH	DEWALT/POWERS BANG-IT+ CONCRETE INSERT (ICC ESR-3657) SPECIAL INSPECTION REQ'D		
					DIA. da INCH	MIN. SPACING Smin INCH	MIN. END DIST. Cmin INCH
38A TO 38K	1100	38A TO 38K	1160	⅜	0.7 (½"Ø)	5¼	2⅝
50A TO 50K	1100	50A TO 50K	1160	½			
63A TO 63K	1100	63A TO 63K	1160	⅝			
75A TO 75K	1100	75A TO 75K	1160	¾			
88A TO 88K	1100	88A TO 88K	1160	⅞			

SEE DETAIL M0.00 FOR SECTION NOTES

[1] ALLOWABLE LOADS HAVE BEEN INCREASED BY A FACTOR OF 1.2 FOR LOAD COMBINATIONS INCLUDING OVERSTRENGTH, Ω_0, PER ASCE 7-10 SEC. 12.4.3.3.

[2] WHEN THE BOLT CENTERLINE DISTANCE EXCEEDS 14⅜" FOR fw = 3⅞" OR 14¼" FOR fw = 4½", THE STRUT MUST BE ROTATED TO COMPLY TO THE DETAIL.

MASON WEST
1601 E. Miraloma Ave. Placentia, CA 92870
TEL (714) 630 - 0701, www.masonwest.com

Jiefu "Jeff" Zhang, SE
California SE No. S5270

PAGE
M2.91.2

HCAI
OPM-0043
Reviewed by William Staehlin
DATE: 01/23/2023
REVIEWED FOR CODE COMPLIANCE
CALIFORNIA BUILDING CODE, 2022

HANGER ATTACHMENT
TO CONCRETE FILLED METAL DECK
WITH (1) DEWALT/POWERS BANG-IT+ CONCRETE INSERT AT LOWER FLUTE

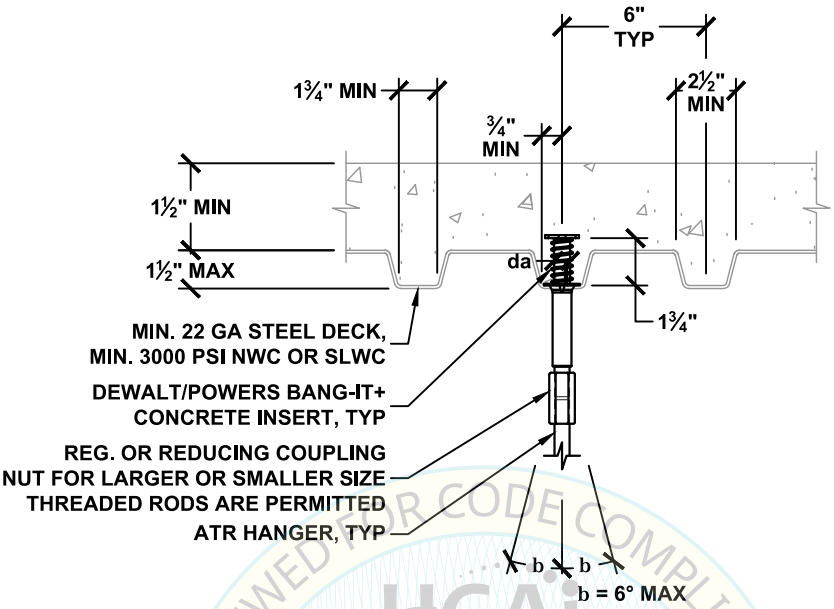

HCAi
OPM-0043
BY: William Staehlin
DATE: 01/23/2023
REVIEWED FOR CODE COMPLIANCE
CALIFORNIA BUILDING CODE 2022

HANGER ATTACHMENT TYPE	ALLOWABLE VERTICAL LOAD Ta [1] LBS	ATR HANGER DIA. INCH	DEWALT/POWERS BANG-IT+ CONCRETE INSERT (ICC ESR-3657) SPECIAL INSPECTION REQ'D		
			DIA. da INCH	MIN. SPACING Smin INCH	MIN. END DIST. Cmin INCH
38A TO 38D	300	⅜	0.7 (⅜"Ø)	5¼	2⅝
38A TO 38D	300	⅜	0.7 (½"Ø)	5¼	2⅝
50A TO 50D	300	½			
63A TO 63D	300	⅝			
50A TO 50D	300	½	1.0 (⅝"Ø)	5¼	2⅝
63A TO 63D	300	⅝			
75A TO 75D	300	¾			
63A TO 63D	300	⅝	1.0 (¾"Ø)	5¼	2⅝
75A TO 75D	300	¾			
88A TO 88D	300	⅞			

SEE DETAIL M0.00 FOR SECTION NOTES

[1] ALLOWABLE LOADS HAVE BEEN INCREASED BY A FACTOR OF 1.2 FOR LOAD COMBINATIONS INCLUDING OVERSTRENGTH, Ω_0, PER ASCE 7-10 SEC. 12.4.3.3.

MASON WEST
1601 E. Miraloma Ave. Placentia, CA 92870
TEL (714) 630 - 0701, www.masonwest.com

Jiefu "Jeff" Zhang, SE
California SE No. S5270

PAGE
M2.92

HANGER ATTACHMENT
TO CONCRETE FILLED METAL DECK
WITH (2) DEWALT/POWERS BANG-IT+ CONCRETE INSERT AT LOWER FLUTE

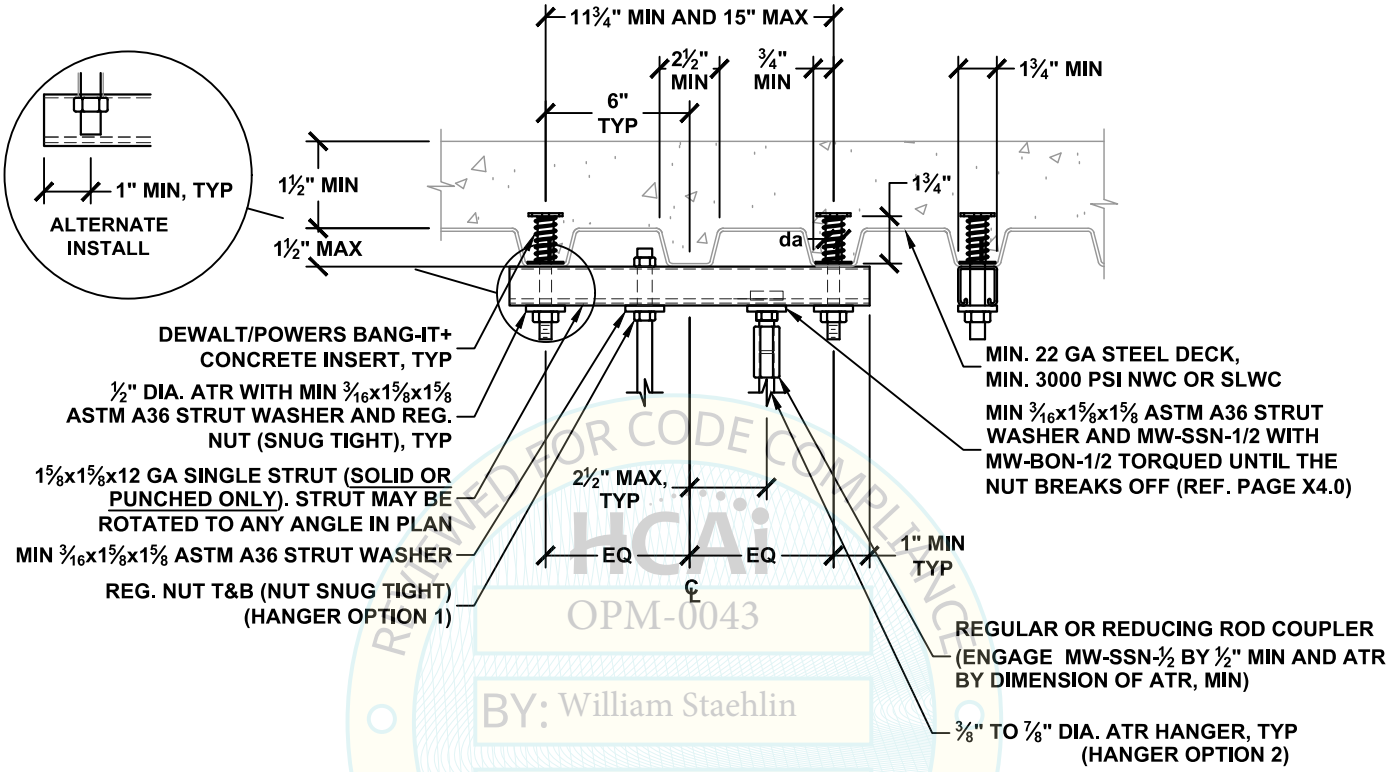

REVIEWED FOR CODE COMPLIANCE
CALIFORNIA BUILDING CODE, 2022
HCAi
OPM-0043
BY: William Staehlin
DATE: 01/23/2023

HANGER ATTACHMENT TYPE	STEEL COMPONENT ALLOWABLE VERTICAL LOAD Ta LBS	HANGER ATTACHMENT TYPE	CONCRETE INSERT ALLOWABLE VERTICAL LOAD Tac [1] LBS	ATR HANGER DIA. INCH	DEWALT/POWERS BANG-IT+ CONCRETE INSERT (ICC ESR-3657) SPECIAL INSPECTION REQ'D		
					DIA. da INCH	MIN. SPACING Smin INCH	MIN. END DIST. Cmin INCH
38A TO 38K	1100	38A TO 38E	420	⅜	0.7 (½"Ø)	5¼	2⅝
50A TO 50K	1100	50A TO 50E	420	½			
63A TO 63K	1100	63A TO 63E	420	⅝			
75A TO 75K	1100	75A TO 75E	420	¾			
88A TO 88K	1100	88A TO 88E	420	⅞			

SEE DETAIL M0.00 FOR SECTION NOTES

[1] ALLOWABLE LOADS HAVE BEEN INCREASED BY A FACTOR OF 1.2 FOR LOAD COMBINATIONS INCLUDING OVERSTRENGTH, Ω_0, PER ASCE 7-10 SEC. 12.4.3.3.

[2] WHEN THE BOLT CENTERLINE DISTANCE EXCEEDS 12¼", THE STRUT MUST BE ROTATED TO COMPLY TO THE DETAIL.

MASON WEST
1601 E. Miraloma Ave. Placentia, CA 92870
TEL (714) 630 - 0701, www.masonwest.com

Jiefu "Jeff" Zhang, SE
California SE No. S5270

PAGE
M2.93

HANGER ATTACHMENT
TO CONCRETE FILLED METAL DECK
WITH (2) DEWALT/POWERS BANG-IT+ CONCRETE INSERT AT LOWER FLUTE

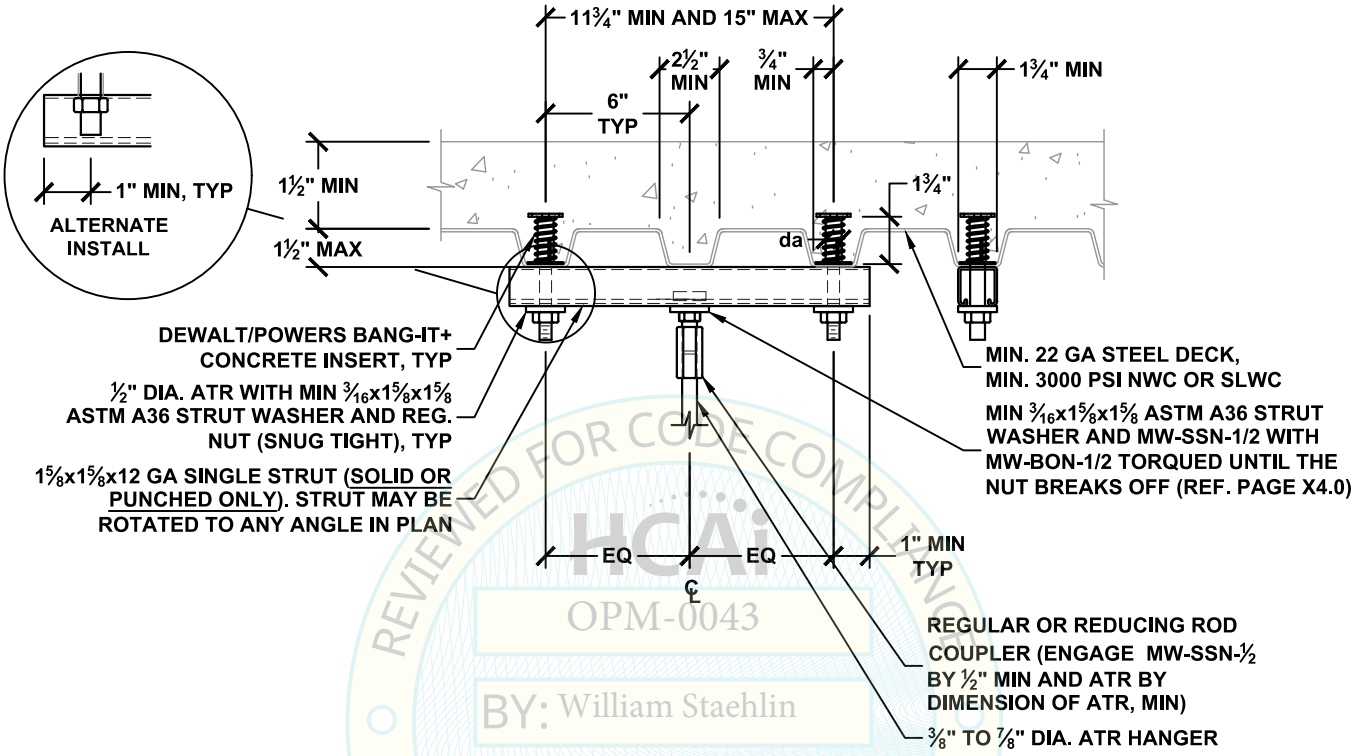

REVIEWED FOR CODE COMPLIANCE
HCAi
OPM-0043
BY: William Staehlin
DATE: 01/23/2023
CALIFORNIA BUILDING CODE, 2022

HANGER ATTACHMENT TYPE	STEEL COMPONENT ALLOWABLE VERTICAL LOAD Ta LBS	HANGER ATTACHMENT TYPE	CONCRETE INSERT ALLOWABLE VERTICAL LOAD Tac [1] LBS	ATR HANGER DIA. INCH	DEWALT/POWERS BANG-IT+ CONCRETE INSERT (ICC ESR-3657) SPECIAL INSPECTION REQ'D		
					DIA. da INCH	MIN. SPACING Smin INCH	MIN. END DIST. Cmin INCH
38A TO 38K	1100	38A TO 38G	600	⅜	0.7 (½"Ø)	5¼	2⅝
50A TO 50K	1100	50A TO 50G	600	½			
63A TO 63K	1100	63A TO 63G	600	⅝			
75A TO 75K	1100	75A TO 75G	600	¾			
88A TO 88K	1100	88A TO 88G	600	⅞			

SEE DETAIL M0.00 FOR SECTION NOTES

[1] ALLOWABLE LOADS HAVE BEEN INCREASED BY A FACTOR OF 1.2 FOR LOAD COMBINATIONS INCLUDING OVERSTRENGTH, Ω_0, PER ASCE 7-10 SEC. 12.4.3.3.

[2] WHEN THE BOLT CENTERLINE DISTANCE EXCEEDS 12¼", THE STRUT MUST BE ROTATED TO COMPLY TO THE DETAIL.

MASON WEST
1601 E. Miraloma Ave. Placentia, CA 92870
TEL (714) 630 - 0701, www.masonwest.com

Jiefu "Jeff" Zhang, SE
California SE No. S5270

PAGE
M2.93.1

HANGER ATTACHMENT
TO CONCRETE FILLED METAL DECK
WITH (2) DEWALT/POWERS BANG-IT+ CONCRETE INSERT AT LOWER FLUTE

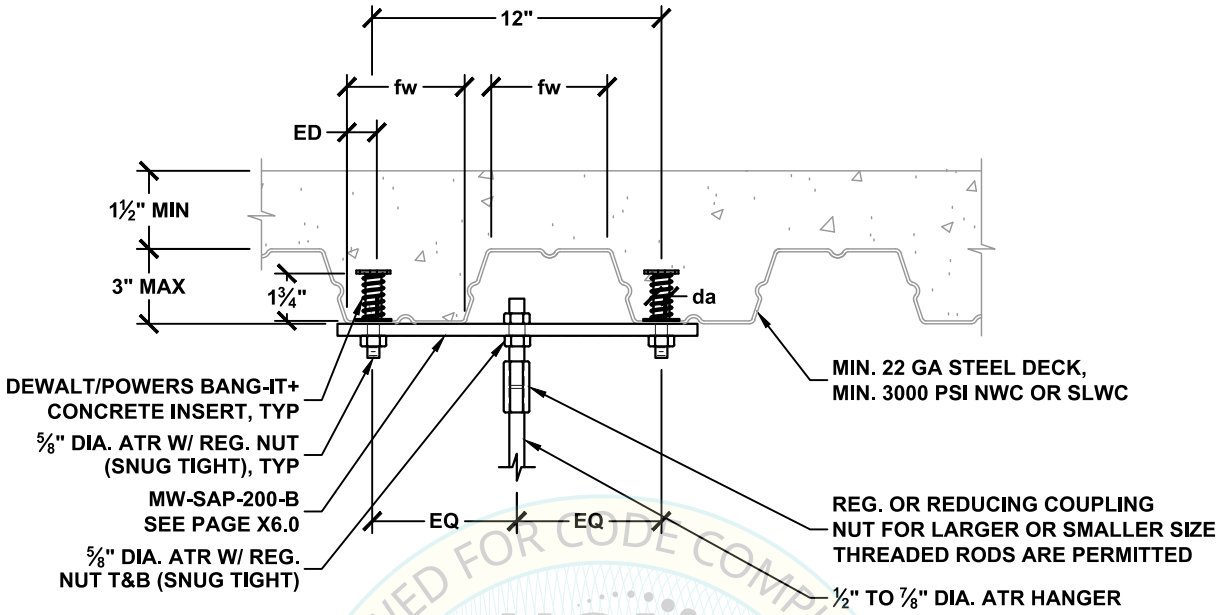

MIN FLUTE WIDTH fw INCH	MIN EDGE DIST ED INCH
3⅞	¾
4½	1⅛

HANGER ATTACHMENT TYPE	STEEL COMPONENT ALLOWABLE VERTICAL LOAD Ta LBS	HANGER ATTACHMENT TYPE	CONCRETE INSERT ALLOWABLE VERTICAL LOAD Tac [1] LBS	ATR HANGER DIA. INCH	DEWALT/POWERS BANG-IT+ CONCRETE INSERT (ICC ESR-3657) SPECIAL INSPECTION REQ'D		
					DIA. da INCH	MIN. SPACING Smin INCH	MIN. END DIST. Cmin INCH
38A TO 38M	1930	38A TO 38K	1160	⅜	1.0 (⅝"Ø)	5¼	2⅝
50A TO 50M	1930	50A TO 50K	1160	½			
63A TO 63M	1930	63A TO 63K	1160	⅝			
75A TO 75M	1930	75A TO 75K	1160	¾			
88A TO 88M	1930	88A TO 88K	1160	⅞			

SEE DETAIL M0.00 FOR SECTION NOTES

[1] ALLOWABLE LOADS HAVE BEEN INCREASED BY A FACTOR OF 1.2 FOR LOAD COMBINATIONS INCLUDING OVERSTRENGTH, Ω_0, PER ASCE 7-10 SEC. 12.4.3.3.

HCAi
OPM-0043
BY: William Staehlin
DATE: 01/23/2023
REVIEWED FOR CODE COMPLIANCE
CALIFORNIA BUILDING CODE, 2022

MASON WEST
1601 E. Miraloma Ave. Placentia, CA 92870
TEL (714) 630 - 0701, www.masonwest.com

Jiefu "Jeff" Zhang, SE
California SE No. S5270

PAGE
M2.94

HANGER ATTACHMENT
TO CONCRETE FILLED METAL DECK
WITH (4) DEWALT/POWERS BANG-IT+ CONCRETE INSERT AT LOWER FLUTE

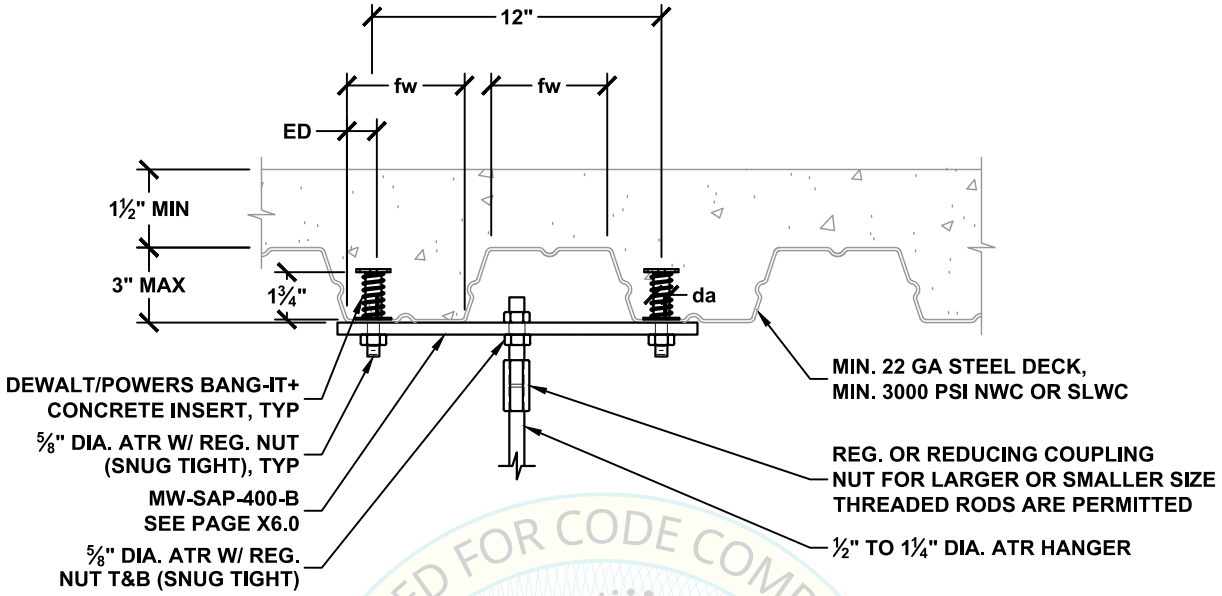

MIN FLUTE WIDTH fw INCH	MIN EDGE DIST ED INCH
3⅞	¾
4½	1⅛

HANGER ATTACHMENT TYPE	STEEL COMPONENT ALLOWABLE VERTICAL LOAD Ta LBS	HANGER ATTACHMENT TYPE	CONCRETE INSERT ALLOWABLE VERTICAL LOAD Tac [1] LBS	ATR HANGER DIA. INCH	DEWALT/POWERS BANG-IT+ CONCRETE INSERT (ICC ESR-3657) SPECIAL INSPECTION REQ'D		
					DIA. da INCH	MIN. SPACING Smin INCH	MIN. END DIST. Cmin INCH
50A TO 50Q	3600	50A TO 50N	2320	½	1.0 (⅝"Ø)	5¼	2⅝
63A TO 63Q	3600	63A TO 63N	2320	⅝			
75A TO 75Q	3500	75A TO 75N	2320	¾			
88A TO 88Q	3500	88A TO 88N	2320	⅞			
100A TO 100Q	3500	100A TO 100N	2320	1			
125A TO 125Q	3500	125A TO 125N	2320	1¼			

SEE DETAIL M0.00 FOR SECTION NOTES

[1] ALLOWABLE LOADS HAVE BEEN INCREASED BY A FACTOR OF 1.2 FOR LOAD COMBINATIONS INCLUDING OVERSTRENGTH, Ω_0, PER ASCE 7-10 SEC. 12.4.3.3.

REVIEWED FOR CODE COMPLIANCE
HCAi
OPM-0043
BY: William Staehlin
DATE: 01/23/2023
CITY OF LA BUILDING CODE 2020

MASON WEST
1601 E. Miraloma Ave. Placentia, CA 92870
TEL (714) 630 - 0701, www.masonwest.com

Jiefu "Jeff" Zhang, SE
California SE No. S5270

PAGE
M2.95

HANGER ATTACHMENT
TO CONCRETE FILLED METAL DECK
WITH (1) DEWALT DDI+ CONCRETE INSERT

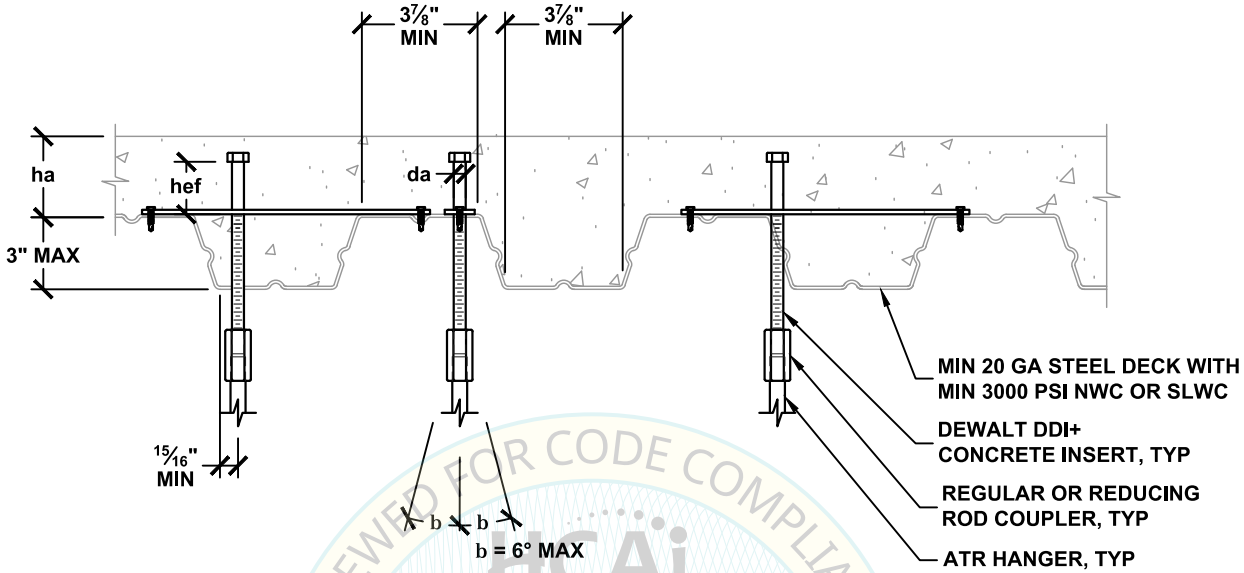

REVIEWED FOR CODE COMPLIANCE
HCAi
OPM-0043
BY: William Staehlin
DATE: 01/23/2023
CALIFORNIA BUILDING CODE 2022

HANGER ATTACHMENT TYPE	ALLOWABLE VERTICAL LOAD Ta [1] LBS	ATR HANGER DIA. INCH	DEWALT DDI+ CONCRETE INSERT (ICC ESR-3958) SPECIAL INSPECTION REQ'D				
			DIA. da INCH	MIN. EFF. EMBED hef INCH	MIN. COVER ha INCH	MIN. SPACING Smin INCH	MIN. END DIST. Cmin INCH
38A TO 38D	900	⅜	⅜	1½	2	4½	2¼
38A TO 38D	1140	⅜	½	1¾	2½	5¼	2⅝
50A TO 50D	1140	½					
63A TO 63D	1140	⅝					
50A TO 50D	1390	½	⅝	2	3¼	6	3
63A TO 63D	1390	⅝					
75A TO 75D	1390	¾					

SEE DETAIL M0.00 FOR SECTION NOTES

[1] ALLOWABLE LOADS HAVE BEEN INCREASED BY A FACTOR OF 1.2 FOR LOAD COMBINATIONS INCLUDING OVERSTRENGTH, Ω_0, PER ASCE 7-10 SEC. 12.4.3.3.

MASON WEST
1601 E. Miraloma Ave. Placentia, CA 92870
TEL (714) 630 - 0701, www.masonwest.com

Jiefu "Jeff" Zhang, SE
California SE No. S5270

PAGE
M2.100

HANGER ATTACHMENT
TO CONCRETE FILLED METAL DECK
WITH (1) CADDY CRLM CONCRETE INSERT AT LOWER FLUTE

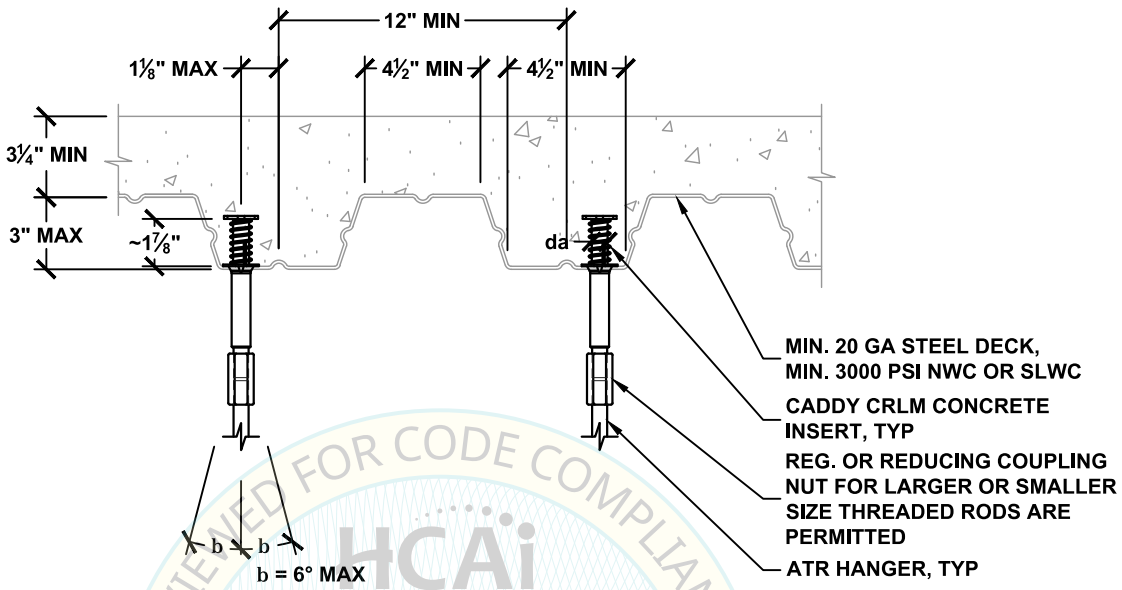

REVIEWED FOR CODE COMPLIANCE
CALIFORNIA BUILDING CODE 2022
HCAi
OPM-0043
BY: William Staehlin
DATE: 01/23/2023

HANGER ATTACHMENT TYPE	ALLOWABLE VERTICAL LOAD Ta [1] LBS	ATR HANGER DIA. INCH	CADDY CRLM CONCRETE INSERT (ICC ESR-3864) SPECIAL INSPECTION REQ'D		
			DIA. da INCH	MIN. SPACING Smin [2] INCH	MIN. END DIST. Cmin INCH
38A TO 38H	830	⅜	0.61 (⅜"Ø)	6	3
38A TO 38H	830	⅜	0.71 (½"Ø)	6	3
50A TO 50H	830	½			
63A TO 63H	830	⅝			

SEE DETAIL M0.00 FOR SECTION NOTES

[1] ALLOWABLE LOADS HAVE BEEN INCREASED BY A FACTOR OF 1.2 FOR LOAD COMBINATIONS INCLUDING OVERSTRENGTH, Ω_0, PER ASCE 7-10 SEC. 12.4.3.3.

[2] AXIAL SPACING PARALLEL TO FLUTE DIRECTION

MASON WEST
1601 E. Miraloma Ave. Placentia, CA 92870
TEL (714) 630 - 0701, www.masonwest.com

Jiefu "Jeff" Zhang, SE
California SE No. S5270

PAGE
M2.110

HANGER ATTACHMENT
TO CONCRETE FILLED METAL DECK
WITH (1) CADDY CRLM CONCRETE INSERT AT UPPER FLUTE

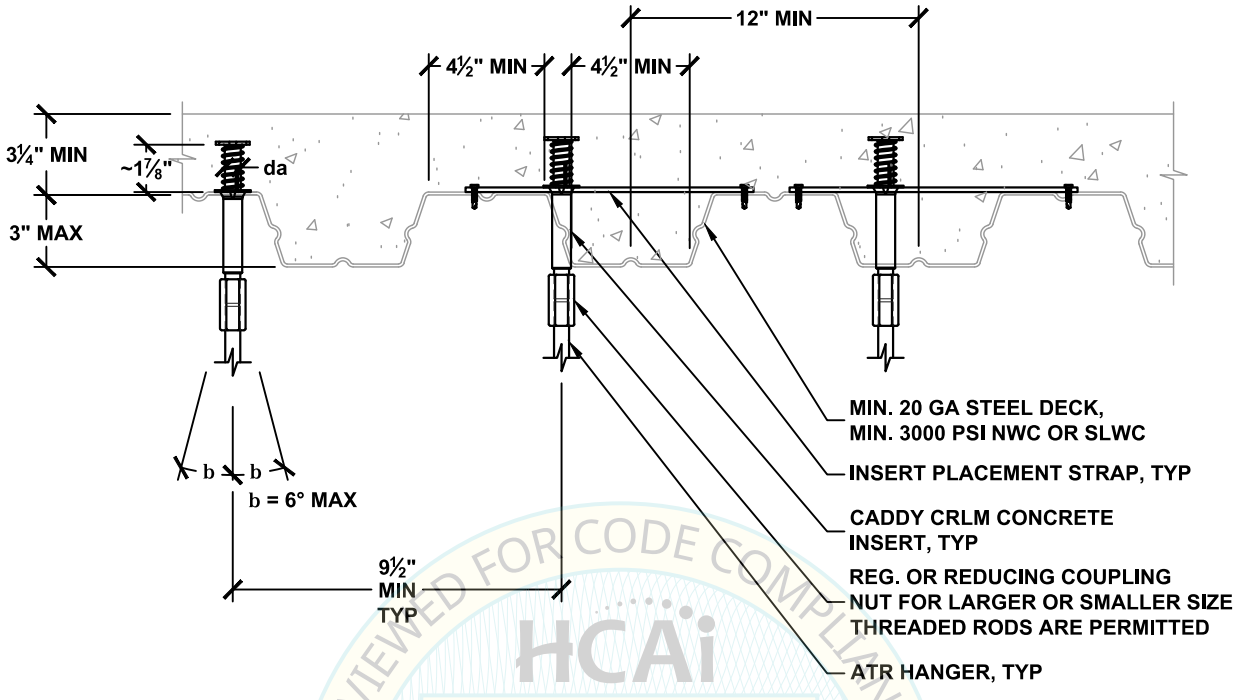

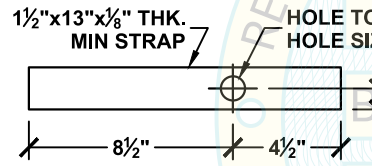

INSERT PLACEMENT STRAP

REVIEWED FOR CODE COMPLIANCE
HCAi
OPM-0043
BY: William Staehlin
DATE: 01/23/2023
CALIFORNIA BUILDING CODE 2022

HANGER ATTACHMENT TYPE	ALLOWABLE VERTICAL LOAD Ta [1] LBS	ATR HANGER DIA. INCH	CADDY CRLM CONCRETE INSERT (ICC ESR-3864) SPECIAL INSPECTION REQ'D		
			DIA. da INCH	MIN. SPACING Smin [2] INCH	MIN. END DIST. Cmin INCH
38A TO 38L	1420	⅜	0.61 (⅜"Ø)	6	3
38A TO 38L	1420	⅜	0.71 (½"Ø)	6	3
50A TO 50L	1420	½			
63A TO 63L	1420	⅝			

SEE DETAIL M0.00 FOR SECTION NOTES

[1] ALLOWABLE LOADS HAVE BEEN INCREASED BY A FACTOR OF 1.2 FOR LOAD COMBINATIONS INCLUDING OVERSTRENGTH, Ω_0, PER ASCE 7-10 SEC. 12.4.3.3.

[2] AXIAL SPACING PARALLEL TO FLUTE DIRECTION

MASON WEST
1601 E. Miraloma Ave. Placentia, CA 92870
TEL (714) 630 - 0701, www.masonwest.com

Jiefu "Jeff" Zhang, SE
California SE No. S5270

PAGE
M2.110.1

HANGER ATTACHMENT
TO CONCRETE FILLED METAL DECK
WITH (2) CADDY CRLM CONCRETE INSERT AT LOWER FLUTE

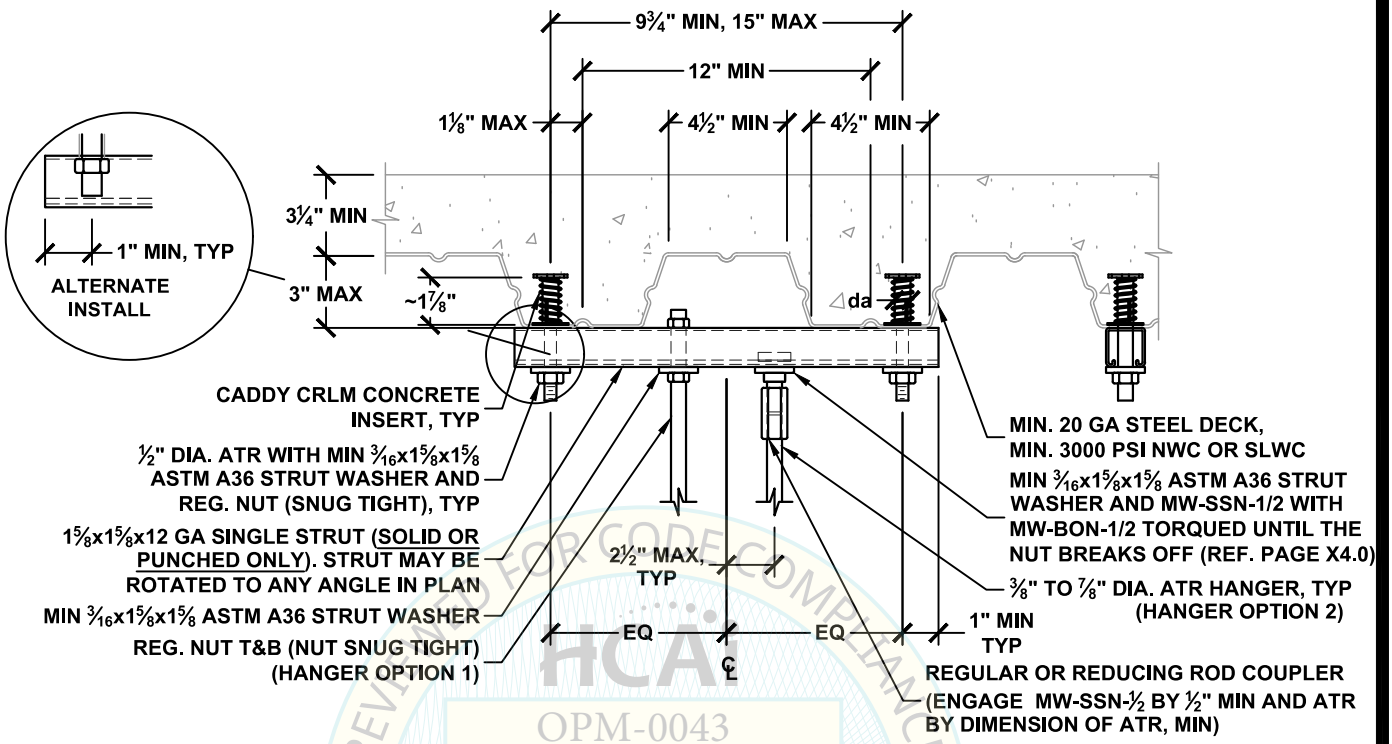

REVIEWED FOR CODE COMPLIANCE
CALIFORNIA BUILDING CODE 2022
HCAI
OPM-0043
BY: William Staehlin
DATE: 01/23/2023

HANGER ATTACHMENT TYPE	STEEL COMPONENT ALLOWABLE VERTICAL LOAD Ta LBS	HANGER ATTACHMENT TYPE	CONCRETE INSERT ALLOWABLE VERTICAL LOAD Tac [1] LBS	ATR HANGER DIA. INCH	CADDY CRLM CONCRETE INSERT (ICC ESR-3864) SPECIAL INSPECTION REQ'D		
					DIA. da INCH	MIN. SPACING Smin [3] INCH	MIN. END DIST. Cmin INCH
38A TO 38K	1100	38A TO 38K	1100	⅜	0.71 (½"Ø)	6	3
50A TO 50K	1100	50A TO 50K	1100	½			
63A TO 63K	1100	63A TO 63K	1100	⅝			
75A TO 75K	1100	75A TO 75K	1100	¾			
88A TO 88K	1100	88A TO 88K	1100	⅞			

SEE DETAIL M0.00 FOR SECTION NOTES

[1] ALLOWABLE LOADS HAVE BEEN INCREASED BY A FACTOR OF 1.2 FOR LOAD COMBINATIONS INCLUDING OVERSTRENGTH, Ω_0, PER ASCE 7-10 SEC. 12.4.3.3.

[2] WHEN THE BOLT CENTERLINE DISTANCE EXCEEDS 14¼", THE STRUT MUST BE ROTATED TO COMPLY TO THE DETAIL.

[3] AXIAL SPACING PARALLEL TO FLUTE DIRECTION

MASON WEST
1601 E. Miraloma Ave. Placentia, CA 92870
TEL (714) 630 - 0701, www.masonwest.com

Jiefu "Jeff" Zhang, SE
California SE No. S5270

PAGE
M2.111

HANGER ATTACHMENT
TO CONCRETE FILLED METAL DECK
WITH (2) CRLM CONCRETE INSERT AT LOWER FLUTE

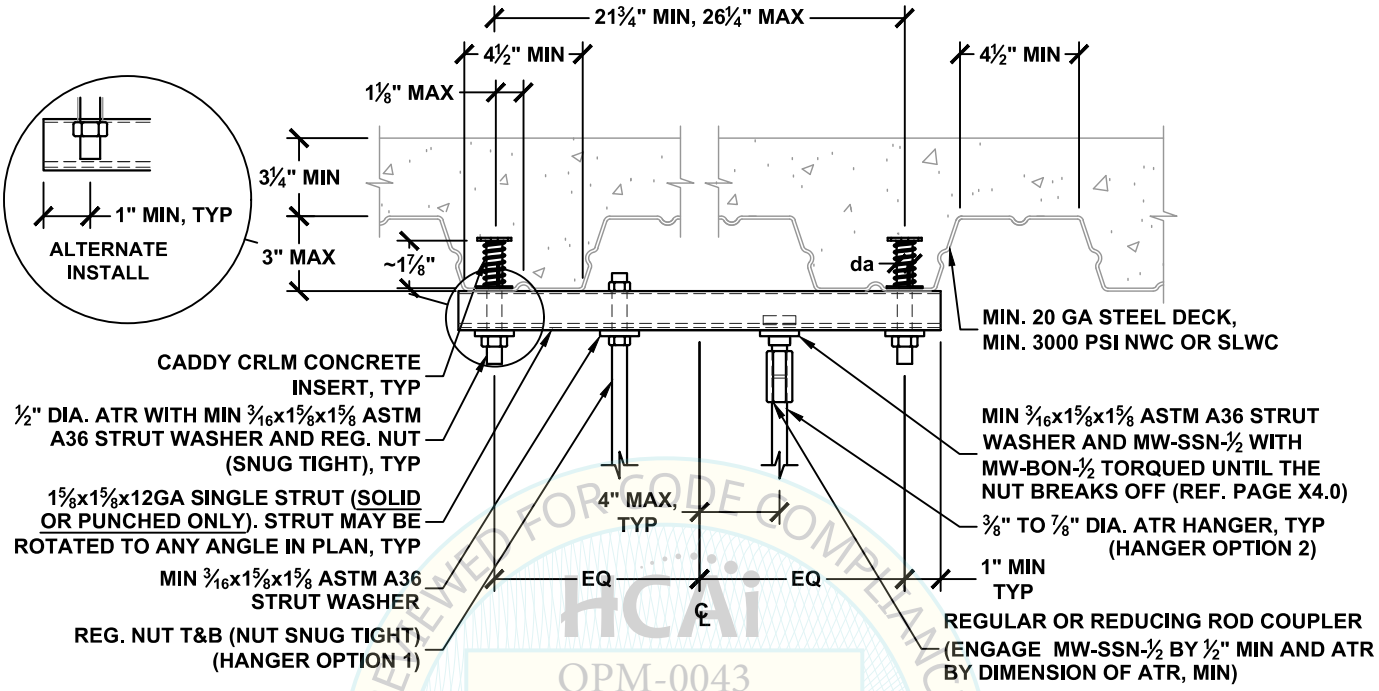

REVIEWED FOR CODE COMPLIANCE
HCAi
OPM-0043
BY: William Staehlin
DATE: 01/23/2023
CALIFORNIA BUILDING CODE 2022

HANGER ATTACHMENT TYPE	STEEL COMPONENT ALLOWABLE VERTICAL LOAD Ta LBS	HANGER ATTACHMENT TYPE	CONCRETE INSERT ALLOWABLE VERTICAL LOAD Tac [1] LBS	ATR HANGER DIA. INCH	CADDY CRLM CONCRETE INSERT (ICC ESR-3864) SPECIAL INSPECTION REQ'D		
					DIA. da INCH	MIN. SPACING Smin [2] INCH	MIN. END DIST. Cmin INCH
38A TO 38G	630	38A TO 38K	1210	⅜	0.71 (½"Ø)	6	3
50A TO 50G	630	50A TO 50K	1210	½			
63A TO 63G	630	63A TO 63K	1210	⅝			
75A TO 75G	630	75A TO 75K	1210	¾			
88A TO 88G	630	88A TO 88K	1210	⅞			

SEE DETAIL M0.00 FOR SECTION NOTES

[1] ALLOWABLE LOADS HAVE BEEN INCREASED BY A FACTOR OF 1.2 FOR LOAD COMBINATIONS INCLUDING OVERSTRENGTH, Ω_0, PER ASCE 7-10 SEC. 12.4.3.3.

[2] AXIAL SPACING PARALLEL TO FLUTE DIRECTION

MASON WEST
1601 E. Miraloma Ave. Placentia, CA 92870
TEL (714) 630 - 0701, www.masonwest.com

Jiefu "Jeff" Zhang, SE
California SE No. S5270

PAGE
M2.111.1

HANGER ATTACHMENT
TO CONCRETE FILLED METAL DECK
WITH (2) CADDY CRLM CONCRETE INSERT AT LOWER FLUTE

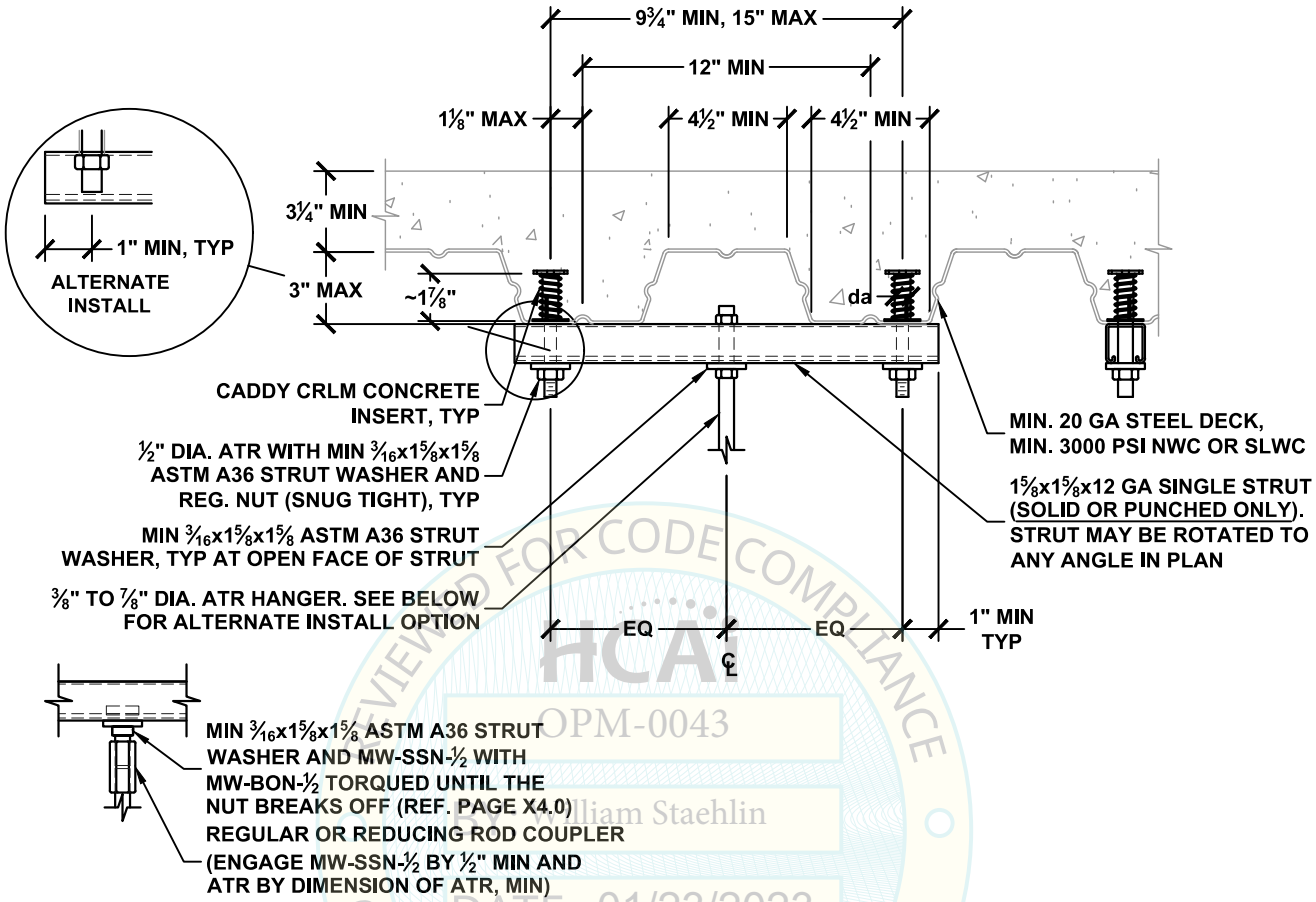

MIN 3⁄16x1⅝x1⅝ ASTM A36 STRUT WASHER AND MW-SSN-½ WITH MW-BON-½ TORQUED UNTIL THE NUT BREAKS OFF (REF. PAGE X4.0)
REGULAR OR REDUCING ROD COUPLER
(ENGAGE MW-SSN-½ BY ½" MIN AND ATR BY DIMENSION OF ATR, MIN)

ALTERNATE HANGER INSTALL

HANGER ATTACHMENT TYPE	STEEL COMPONENT ALLOWABLE VERTICAL LOAD Ta LBS	HANGER ATTACHMENT TYPE	CONCRETE INSERT ALLOWABLE VERTICAL LOAD Tac [1] LBS	ATR HANGER DIA. INCH	CADDY CRLM CONCRETE INSERT (ICC ESR-3864) SPECIAL INSPECTION REQ'D		
					DIA. da INCH	MIN. SPACING Smin[3] INCH	MIN. END DIST. Cmin INCH
38A TO 38K	1100	38A TO 38M	1660	⅜	0.71 (½"Ø)	6	3
50A TO 50K	1100	50A TO 50M	1660	½			
63A TO 63K	1100	63A TO 63M	1660	⅝			
75A TO 75K	1100	75A TO 75M	1660	¾			
88A TO 88K	1100	88A TO 88M	1660	⅞			

SEE DETAIL M0.00 FOR SECTION NOTES

[1] ALLOWABLE LOADS HAVE BEEN INCREASED BY A FACTOR OF 1.2 FOR LOAD COMBINATIONS INCLUDING OVERSTRENGTH, Ω_0, PER ASCE 7-10 SEC. 12.4.3.3.

[2] WHEN THE BOLT CENTERLINE DISTANCE EXCEEDS 14¼", THE STRUT MUST BE ROTATED TO COMPLY TO THE DETAIL.

[3] AXIAL SPACING PARALLEL TO FLUTE DIRECTION

REVIEWED FOR CODE COMPLIANCE
HCAi
OPM-0043
By: William Staehlin
DATE: 01/23/2023
CALIFORNIA BUILDING CODE 2022

MASON WEST
1601 E. Miraloma Ave. Placentia, CA 92870
TEL (714) 630 - 0701, www.masonwest.com

Jiefu "Jeff" Zhang, SE
California SE No. S5270

PAGE
M2.111.2

HANGER ATTACHMENT
TO CONCRETE FILLED METAL DECK
WITH (1) BADGER INDUSTRIES MDH NO-DRILL™ HANGER

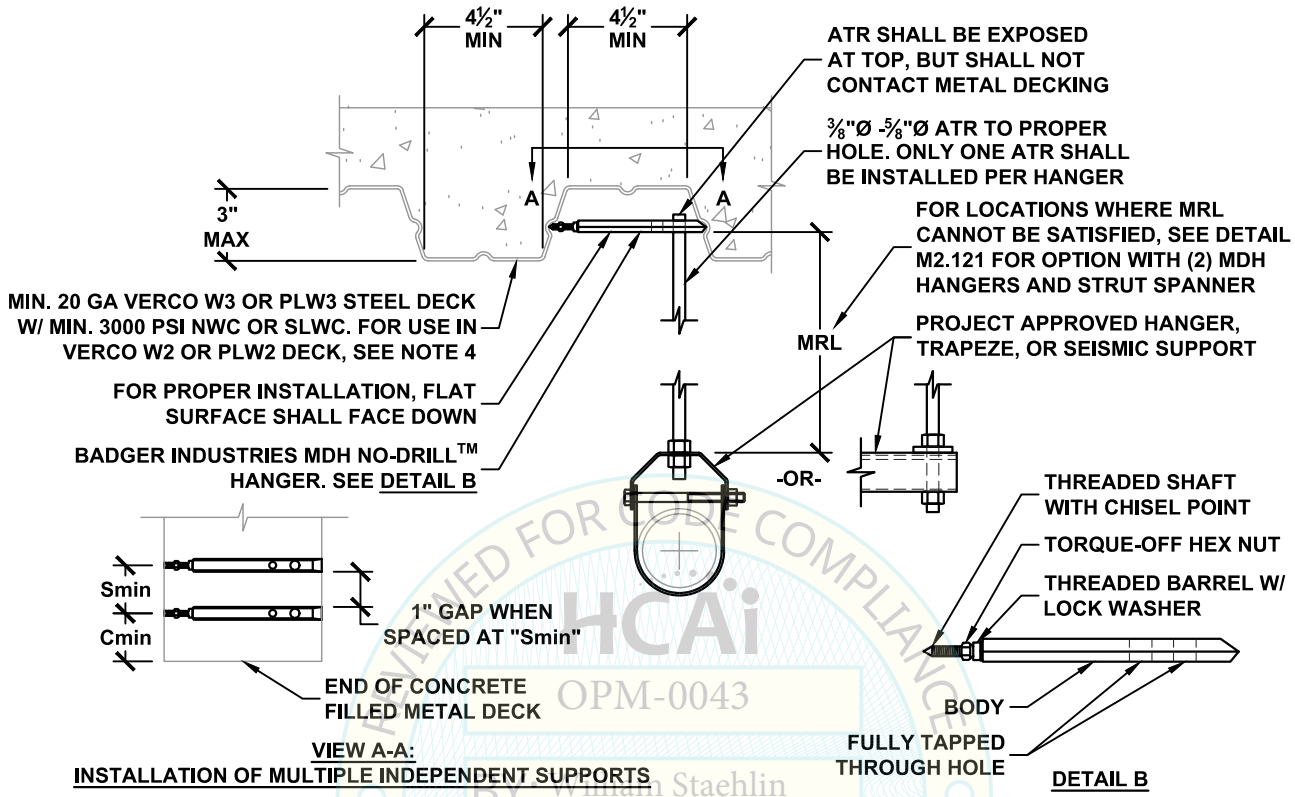

GRAVITY ONLY		GRAVITY & SEISMIC		ATR HANGER DIA. INCH	MIN ROD LENGTH MRL INCH	MDH SIZE	MIN SPACING Smin INCH	MIN END DIST. Cmin INCH
HANGER CONNECTION TYPE	ALLOWABLE VERTICAL LOAD LBS	HANGER CONNECTION TYPE	ALLOWABLE VERTICAL LOAD LBS					
38A TO 38C	200	38A TO 38E	400	⅜	8	MDH3812	2	6
50A TO 50C	200	50A TO 50E	400	½	18			
50A TO 50D	300	50A TO 50G	600	½	8	MDH1258	3	6
63A TO 63D	300	63A TO 63G	600	⅝	18			

1 SEE DETAIL M0.00 FOR SECTION NOTES
2 WHEN USED FOR "GRAVITY & SEISMIC" LOADING, THE GRAVITY DEMAND SHALL NOT EXCEED THE "GRAVITY ONLY" ALLOWABLE LOAD.
3 PROXIMITY OR SPACING OF NEW OR EXISTING CONCRETE INSERTS OR DRILLED HOLE ANCHORS TO THE MDH DOES NOT IMPACT THE LISTED MDH CAPACITIES.
4 ONLY THE MDH3812 MAY BE USED IN VERCO W2 OR PLW2 DECK AND SHALL BE USED FOR GRAVITY ONLY LOADS.
5 INSTALLATION: CLEAN METAL DECKING GROOVES TO EXPOSE PLATED DECKING METAL PRIOR TO PLACEMENT OF THE MDH HANGER. ACCURATELY PLACE MDH HANGER CHISEL POINT ENDS INTO METAL DECKING GROOVES WITH FLAT SURFACE FACING DOWNWARDS AND WITH THE LENGTH OF THE MDH BODY BEING PERPENDICULAR TO THE DECKING GROOVES. WHILE HOLDING THE BODY CHISEL POINT END TIGHT INTO METAL DECKING GROOVE, TIGHTEN TORQUE-OFF HEX NUT UNTIL BOTH CHISEL POINT ENDS ARE TIGHT AND SECURELY WEDGED INTO THE OPPOSING METAL DECKING GROOVES. WHILE HOLDING THE MDH HANGER BODY IN PLACE, TIGHTEN THE TORQUE-OFF HEX NUT WITH AN OPEN END WRENCH UNTIL THE HEX NUT HAS BROKEN AWAY FROM THE THREADED BARREL, LEAVING THE LOCK WASHER COMPRESSED AND THE HEX NUT LOOSE ON THE THREADED SHAFT. FOR REFERENCE, A MINIMUM OF 15 FT-LBS OF TORQUE IS REQUIRED FOR THE MDH3812 AND A MINIMUM OF 20 FT-LBS OF TORQUE IS REQUIRED FOR THE MDH1258.

MASON WEST
1601 E. Miraloma Ave. Placentia, CA 92870
TEL (714) 630 - 0701, www.masonwest.com

Jiefu "Jeff" Zhang, SE
California SE No. S5270

PAGE
M2.120

REVIEWED FOR CODE COMPLIANCE
HCAi
OPM-0043
BY: William Staehlin
DATE: 1/23/2023
CBC 2022 BUILDING CODE

HANGER ATTACHMENT
TO CONCRETE FILLED METAL DECK
WITH (1) BADGER INDUSTRIES MDH NO-DRILL™ HANGER

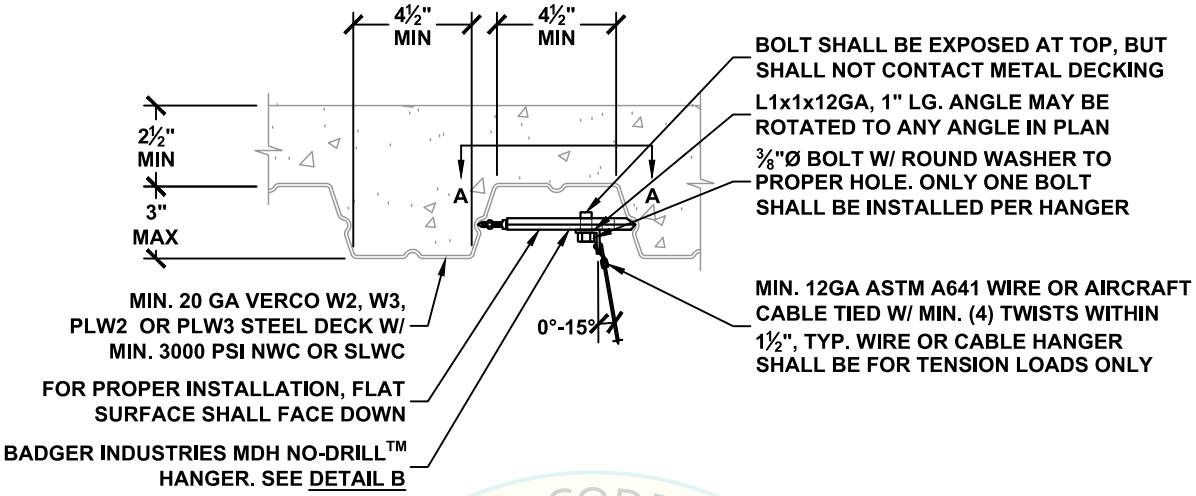

GRAVITY ONLY				
HANGER CONNECTION TYPE	ALLOWABLE VERTICAL LOAD LBS	MDH SIZE	MIN SPACING Smin INCH	MIN END DIST. Cmin INCH
38A TO 38C	180	MDH3812	2	6

1 SEE DETAIL M0.00 FOR SECTION NOTES

2 PROXIMITY OR SPACING OF NEW OR EXISTING CONCRETE INSERTS OR DRILLED HOLE ANCHORS TO THE MDH DOES NOT IMPACT THE LISTED MDH CAPACITIES.

3 INSTALLATION: CLEAN METAL DECKING GROOVES TO EXPOSE PLATED DECKING METAL PRIOR TO PLACEMENT OF THE MDH HANGER. ACCURATELY PLACE MDH HANGER CHISEL POINT ENDS INTO METAL DECKING GROOVES WITH FLAT SURFACE FACING DOWNWARDS AND WITH THE LENGTH OF THE MDH BODY BEING PERPENDICULAR TO THE DECKING GROOVES. WHILE HOLDING THE BODY CHISEL POINT END TIGHT INTO METAL DECKING GROOVE, TIGHTEN TORQUE-OFF HEX NUT UNTIL BOTH CHISEL POINT ENDS ARE TIGHT AND SECURELY WEDGED INTO THE OPPOSING METAL DECKING GROOVES. WHILE HOLDING THE MDH HANGER BODY IN PLACE, TIGHTEN THE TORQUE-OFF HEX NUT WITH AN OPEN END WRENCH UNTIL THE HEX NUT HAS BROKEN AWAY FROM THE THREADED BARREL, LEAVING THE LOCK WASHER COMPRESSED AND THE HEX NUT LOOSE ON THE THREADED SHAFT. FOR REFERENCE, A MINIMUM OF 15 FT-LBS OF TORQUE IS REQUIRED FOR THE MDH3812.

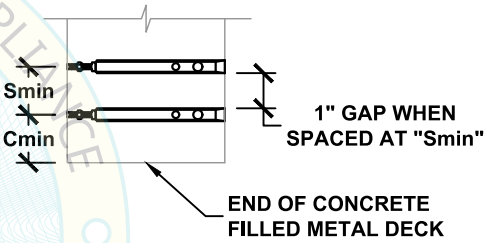

VIEW A-A:
INSTALLATION OF MULTIPLE INDEPENDENT SUPPORTS

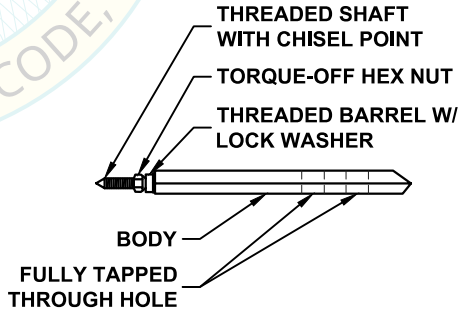

DETAIL B

REVIEWED FOR CODE COMPLIANCE
HCAi
OPM-0043
BY: William Staehlin
1/23/2023
2022 CALIFORNIA BUILDING CODE

MASON WEST
1601 E. Miraloma Ave. Placentia, CA 92870
TEL (714) 630 - 0701, www.masonwest.com

Jiefu "Jeff" Zhang, SE
California SE No. S5270

PAGE
M2.120.1

HANGER ATTACHMENT
TO CONCRETE FILLED METAL DECK
WITH (2) BADGER INDUSTRIES MDH NO-DRILL™ HANGERS

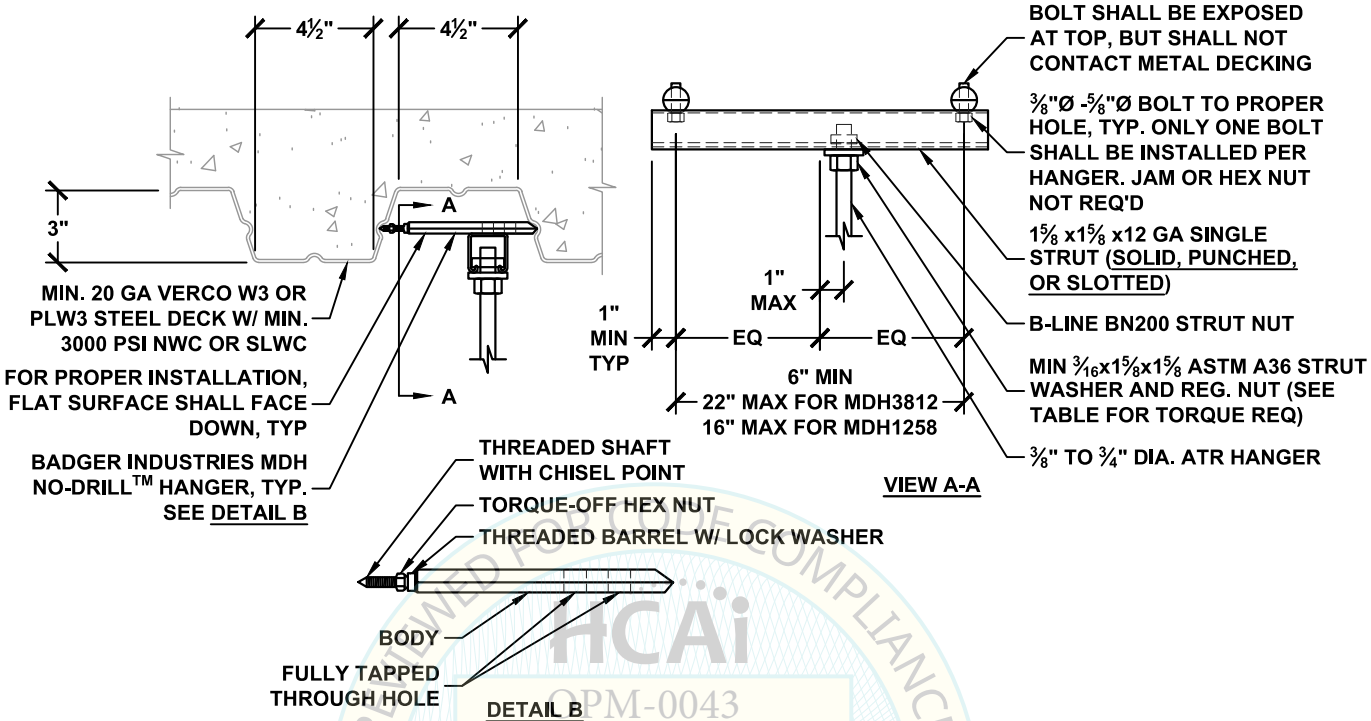

GRAVITY ONLY		GRAVITY & SEISMIC					
HANGER CONNECTION TYPE	ALLOWABLE VERTICAL LOAD LBS	HANGER CONNECTION TYPE	ALLOWABLE VERTICAL LOAD LBS	ATR HANGER DIA. INCH	MDH SIZE	MIN SPACING Smin INCH	MIN END DIST. Cmin INCH
38A TO 38D	300	38A TO 38G	600	⅜	MDH3812	2	6
50A TO 50D	300	50A TO 50G	600	½			
63A TO 63D	300	63A TO 63G	600	⅝			
38A TO 38F	450	38A TO 38H	900	⅜	MDH1258	3	6
50A TO 50F	450	50A TO 50H	900	½			
63A TO 63F	450	63A TO 63H	900	⅝			
75A TO 75F	450	75A TO 75H	900	¾			

FASTENER WITH STRUT NUT	
DIA. INCH	TORQUE REQ'D FT-LBS
⅜	19
½ - ¾	50

1 SEE DETAIL M0.00 FOR SECTION NOTES

2 WHEN USED FOR "GRAVITY & SEISMIC" LOADING, THE GRAVITY DEMAND SHALL NOT EXCEED THE "GRAVITY ONLY" ALLOWABLE LOAD.

3 PROXIMITY OR SPACING OF NEW OR EXISTING CONCRETE INSERTS OR DRILLED HOLE ANCHORS TO THE MDH DOES NOT IMPACT THE LISTED MDH CAPACITIES.

4 INSTALLATION: CLEAN METAL DECKING GROOVES TO EXPOSE PLATED DECKING METAL PRIOR TO PLACEMENT OF THE MDH HANGER. ACCURATELY PLACE MDH HANGER CHISEL POINT ENDS INTO METAL DECKING GROOVES WITH FLAT SURFACE FACING DOWNWARDS AND WITH THE LENGTH OF THE MDH BODY BEING PERPENDICULAR TO THE DECKING GROOVES. WHILE HOLDING THE BODY CHISEL POINT END TIGHT INTO METAL DECKING GROOVE, TIGHTEN TORQUE-OFF HEX NUT UNTIL BOTH CHISEL POINT ENDS ARE TIGHT AND SECURELY WEDGED INTO THE OPPOSING METAL DECKING GROOVES. WHILE HOLDING THE MDH HANGER BODY IN PLACE, TIGHTEN THE TORQUE-OFF HEX NUT WITH AN OPEN END WRENCH UNTIL THE HEX NUT HAS BROKEN AWAY FROM THE THREADED BARREL, LEAVING THE LOCK WASHER COMPRESSED AND THE HEX NUT LOOSE ON THE THREADED SHAFT. FOR REFERENCE, A MINIMUM OF 15 FT-LBS OF TORQUE IS REQUIRED FOR THE MDH3812 AND A MINIMUM OF 20 FT-LBS OF TORQUE IS REQUIRED FOR THE MDH1258.

MASON WEST
1601 E. Miraloma Ave. Placentia, CA 92870
TEL (714) 630 - 0701, www.masonwest.com

Jiefu "Jeff" Zhang, SE
California SE No. S5270

PAGE
M2.121

HCAi
OPM-0043
REVIEWED FOR CODE COMPLIANCE
By William Staehlin
DATE: 01/23/2023
CALIFORNIA BUILDING CODE, 2022

HANGER ATTACHMENT
TO CONCRETE FILLED METAL DECK
WITH (2) BADGER INDUSTRIES MDH NO-DRILL™ HANGERS

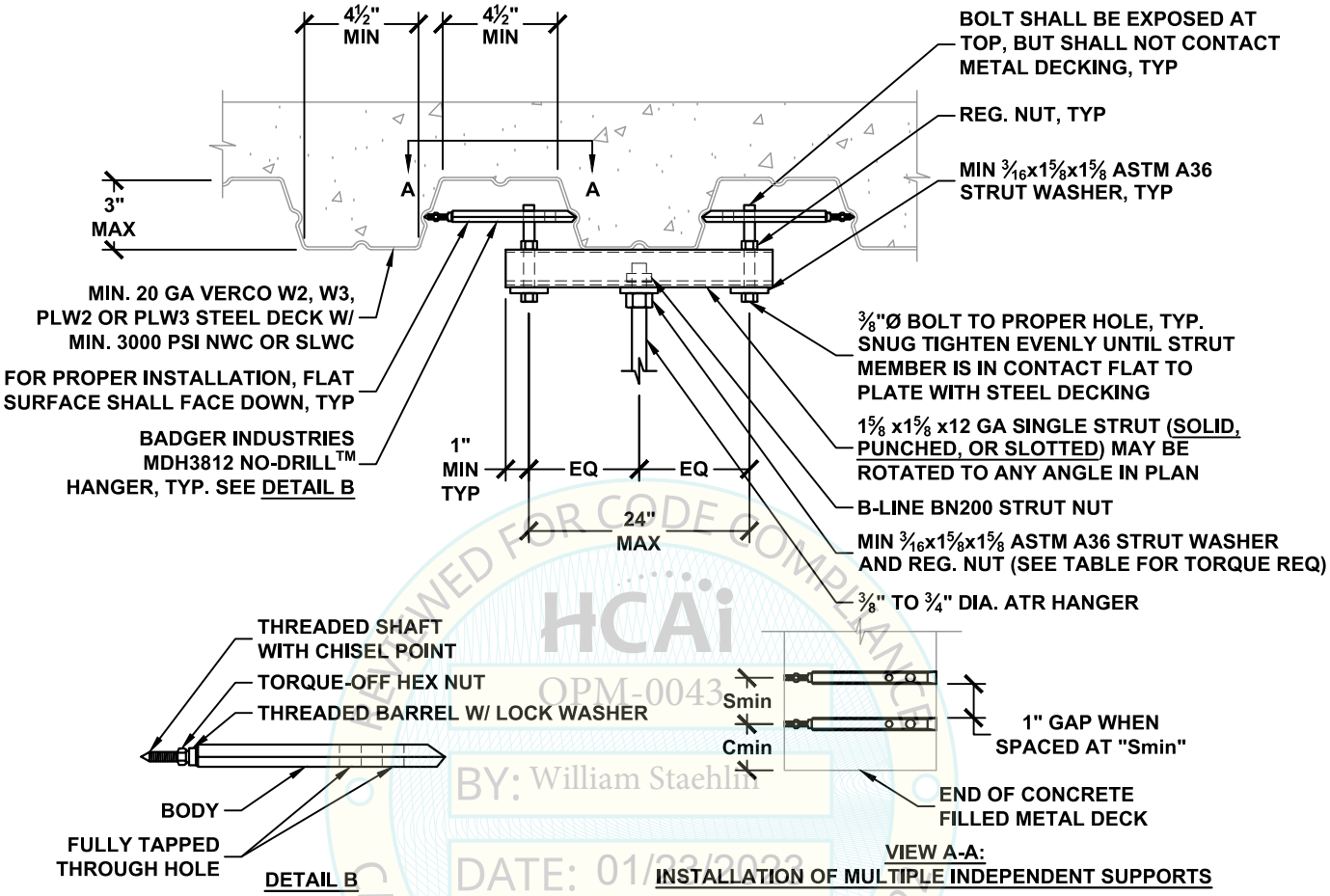

DETAIL B

VIEW A-A:
INSTALLATION OF MULTIPLE INDEPENDENT SUPPORTS

GRAVITY ONLY		GRAVITY & SEISMIC		ATR HANGER DIA. INCH	MDH SIZE	MIN SPACING Smin INCH	MIN END DIST. Cmin INCH
HANGER CONNECTION TYPE	ALLOWABLE VERTICAL LOAD LBS	HANGER CONNECTION TYPE	ALLOWABLE VERTICAL LOAD LBS				
38A TO 38E	400	38A TO 38G	690	3/8	MDH3812	2	6
50A TO 50E	400	50A TO 50G	690	1/2			
63A TO 63E	400	63A TO 63G	690	5/8			

FASTENER WITH STRUT NUT	
DIA. INCH	TORQUE REQ'D FT-LBS
3/8	19
1/2 - 3/4	50

1 SEE DETAIL M0.00 FOR SECTION NOTES
2 WHEN USED FOR "GRAVITY & SEISMIC" LOADING, THE GRAVITY DEMAND SHALL NOT EXCEED THE "GRAVITY ONLY" ALLOWABLE LOAD.
3 PROXIMITY OR SPACING OF NEW OR EXISTING CONCRETE INSERTS OR DRILLED HOLE ANCHORS TO THE MDH DOES NOT IMPACT THE LISTED MDH CAPACITIES.
4 INSTALLATION: CLEAN METAL DECKING GROOVES TO EXPOSE PLATED DECKING METAL PRIOR TO PLACEMENT OF THE MDH HANGER. ACCURATELY PLACE MDH HANGER CHISEL POINT ENDS INTO METAL DECKING GROOVES WITH FLAT SURFACE FACING DOWNWARDS AND WITH THE LENGTH OF THE MDH BODY BEING PERPENDICULAR TO THE DECKING GROOVES. WHILE HOLDING THE BODY CHISEL POINT END TIGHT INTO METAL DECKING GROOVE, TIGHTEN TORQUE-OFF HEX NUT UNTIL BOTH CHISEL POINT ENDS ARE TIGHT AND SECURELY WEDGED INTO THE OPPOSING METAL DECKING GROOVES. WHILE HOLDING THE MDH HANGER BODY IN PLACE, TIGHTEN THE TORQUE-OFF HEX NUT WITH AN OPEN END WRENCH UNTIL THE HEX NUT HAS BROKEN AWAY FROM THE THREADED BARREL, LEAVING THE LOCK WASHER COMPRESSED AND THE HEX NUT LOOSE ON THE THREADED SHAFT. FOR REFERENCE, A MINIMUM OF 15 FT-LBS OF TORQUE IS REQUIRED FOR THE MDH3812.

MASON WEST
1601 E. Miraloma Ave. Placentia, CA 92870
TEL (714) 630 - 0701, www.masonwest.com

Jiefu "Jeff" Zhang, SE
California SE No. S5270

PAGE
M2.122

REVIEWED FOR CODE COMPLIANCE
HCAi
OPM-0043
BY: William Staehlin
DATE: 01/23/2023
CALIFORNIA BUILDING CODE 2022

HANGER ATTACHMENT
TO CONCRETE FILLED METAL DECK
WITH (1) HILTI KB-TZ2 CARBON STEEL CONCRETE ANCHOR

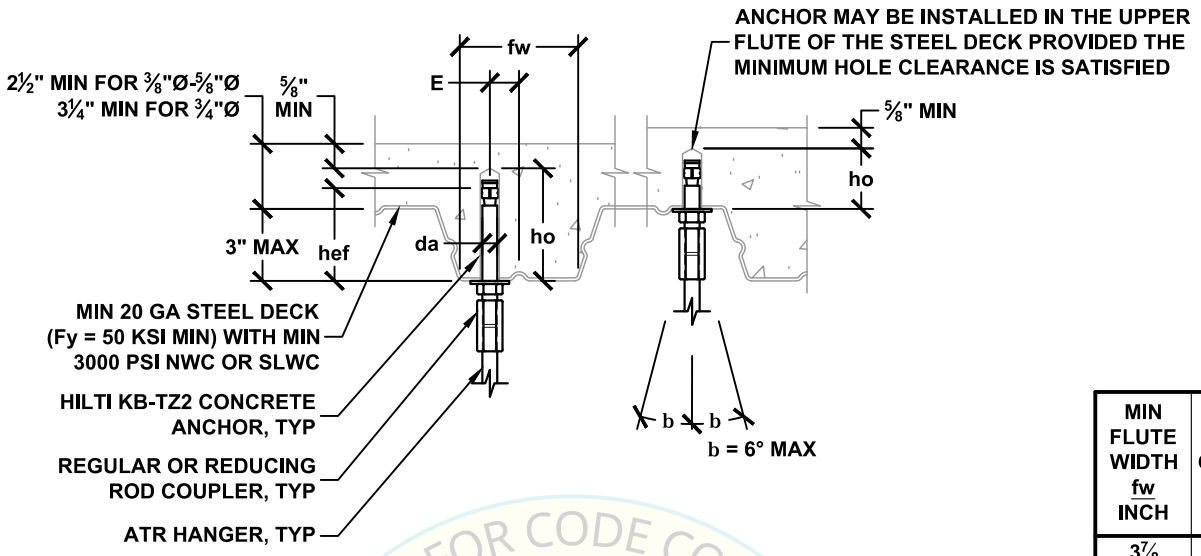

MIN FLUTE WIDTH fw INCH	MAX OFFSET E INCH
3⅞	15⁄16
4½	1

HANGER ATTACHMENT TYPE	ALLOWABLE VERTICAL LOAD Ta [1] LBS	MIN ATR HANGER DIA. INCH	HILTI KB-TZ2 CONCRETE ANCHOR (ICC ESR-4266) SPECIAL INSPECTION REQ'D					
			DIA. da INCH	MIN EFF. EMBED hef INCH	MIN HOLE DEPTH ho INCH	MIN SPACING Smin INCH	MIN END DIST. Cmin INCH	TORQUE REQ'D FT-LBS
38A TO 38J	980	⅜	⅜	2½	3¼	MAX OF: 3*hef OR 1.5*FLUTE WIDTH	3¾	30
38A TO 38L	1340	⅜	½	2½	3¼		3¾	50
50A TO 50L	1340	½						
63A TO 63L	1340	⅝						
38A TO 38L	1370	⅜	½	3¼	4¼		4⅞	50
50A TO 50L	1370	½						
63A TO 63L	1370	⅝						
50A TO 50M	1610	½	⅝	2¾	3¾		4⅛	40
63A TO 63M	1610	⅝						
75A TO 75M	1610	¾						
50A TO 50M	1800	½	⅝	4	4¾		6	40
63A TO 63M	1800	⅝						
75A TO 75M	1800	¾						
63A TO 63L	1530	⅝	¾	3¾	4¾		5⅝	110
75A TO 75L	1530	¾						
88A TO 88L	1530	⅞						

SEE DETAIL M0.00 FOR SECTION NOTES

[1] ALLOWABLE LOADS HAVE BEEN INCREASED BY A FACTOR OF 1.2 FOR LOAD COMBINATIONS INCLUDING OVERSTRENGTH, Ω_0, PER ASCE 7-10 SEC. 12.4.3.3 OR ASCE 7-16 SEC. 2.4.5.

REVIEWED FOR CODE COMPLIANCE
HCAi
OPM-0043
BY: William Staehlin
DATE: 01/23/2023
CALIFORNIA BUILDING CODE, 2022

MASON WEST
1601 E. Miraloma Ave. Placentia, CA 92870
TEL (714) 630 - 0701, www.masonwest.com

Jiefu "Jeff" Zhang, SE
California SE No. S5270

HANGER ATTACHMENT
TO CONCRETE FILLED METAL DECK
WITH (2) HILTI KB-TZ2 CARBON STEEL CONCRETE ANCHORS

MIN FLUTE WIDTH fw INCH	MAX OFFSET E INCH
3⅞	15/16
4½	1

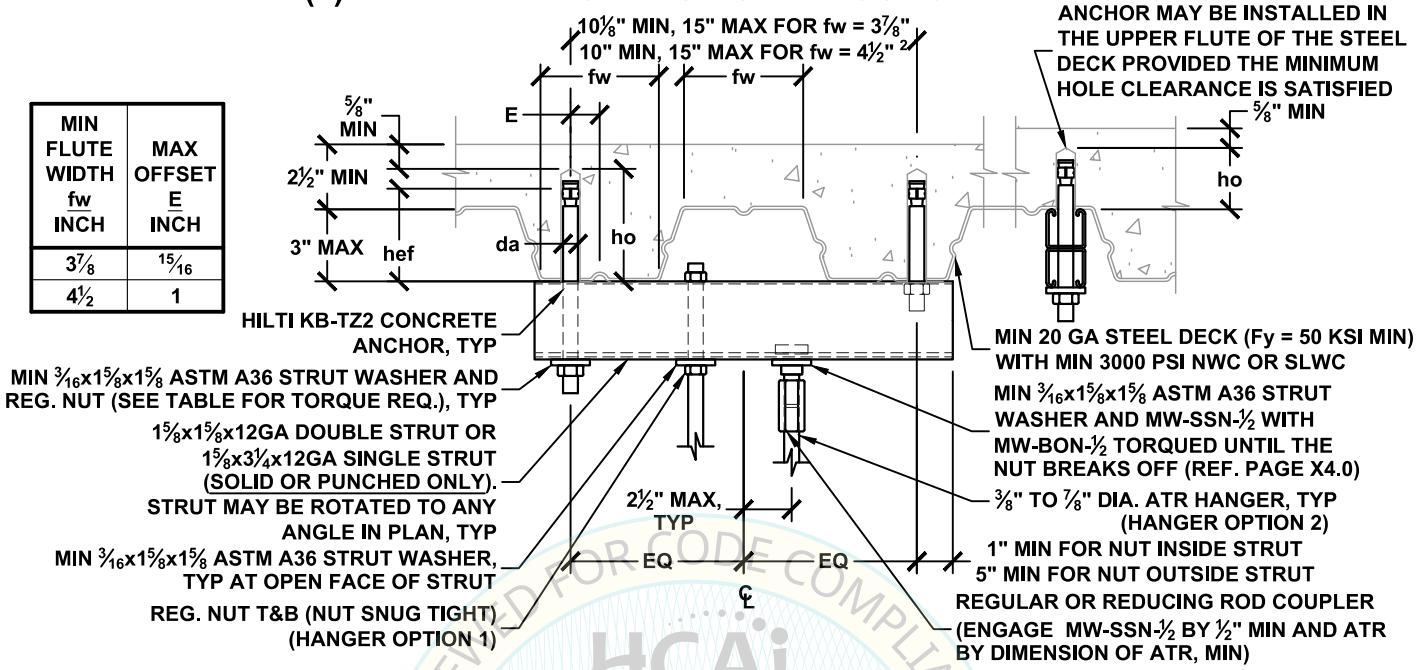

HANGER ATTACHMENT TYPE	STEEL COMPONENT ALLOWABLE VERTICAL LOAD Ta LBS	HANGER ATTACHMENT TYPE	CONCRETE ANCHOR ALLOWABLE VERTICAL LOAD Tac [1] LBS	ATR HANGER DIA. INCH	HILTI KB-TZ2 CONCRETE ANCHOR (ICC ESR-4266) SPECIAL INSPECTION REQ'D					
					DIA. da INCH	MIN EFF. EMBED. hef INCH	MIN HOLE DEPTH ho INCH	MIN SPACING Smin INCH	MIN END DIST. Cmin INCH	TORQUE REQ'D FT-LBS
38A TO 38N	2400	38A TO 38L	1310	⅜	⅜	2½	3¼	MAX OF: 3*hef OR 1.5*FLUTE WIDTH	3¾	30
50A TO 50P	2620	50A TO 50L	1310	½						
63A TO 63P	2620	63A TO 63L	1310	⅝						
75A TO 75P	2620	75A TO 75L	1310	¾						
88A TO 88P	2620	88A TO 88L	1310	⅞						
38A TO 38N	2400	38A TO 38M	1830	⅜	½	3¼	4¼	MAX OF: 3*hef OR 1.5*FLUTE WIDTH	4⅞	50
50A TO 50P	2620	50A TO 50M	1830	½						
63A TO 63P	2620	63A TO 63M	1830	⅝						
75A TO 75P	2620	75A TO 75M	1830	¾						
88A TO 88P	2620	88A TO 88M	1830	⅞						
38A TO 38N	2400	38A TO 38N	2400	⅜	⅝	4	4¾	MAX OF: 3*hef OR 1.5*FLUTE WIDTH	6	40
50A TO 50P	2620	50A TO 50N	2400	½						
63A TO 63P	2620	63A TO 63N	2400	⅝						
75A TO 75P	2620	75A TO 75N	2400	¾						
88A TO 88P	2620	88A TO 88N	2400	⅞						

SEE DETAIL M0.00 FOR SECTION NOTES

[1] ALLOWABLE LOADS HAVE BEEN INCREASED BY A FACTOR OF 1.2 FOR LOAD COMBINATIONS INCLUDING OVERSTRENGTH, Ω_0, PER ASCE 7-10 SEC. 12.4.3.3 OR ASCE 7-16 SEC. 2.4.5.

[2] WHEN THE BOLT CENTERLINE DISTANCE EXCEEDS 13⅞" FOR fw = 3⅞" OR 14" FOR fw = 4½", THE STRUT MUST BE ROTATED TO COMPLY TO THE DETAIL.

MASON WEST
1601 E. Miraloma Ave. Placentia, CA 92870
TEL (714) 630 - 0701, www.masonwest.com

Jiefu "Jeff" Zhang, SE
California SE No. S5270

PAGE
M2.131

HCAi
OPM-0043
BY: William Staehlin
DATE: 01/23/2023
REVIEWED FOR CODE COMPLIANCE
CALIFORNIA BUILDING CODE, 2022

HANGER ATTACHMENT
TO CONCRETE FILLED METAL DECK
WITH (2) HILTI KB-TZ2 CARBON STEEL CONCRETE ANCHORS

MIN FLUTE WIDTH fw INCH	MAX OFFSET E INCH
3⅞	15/16
4½	1

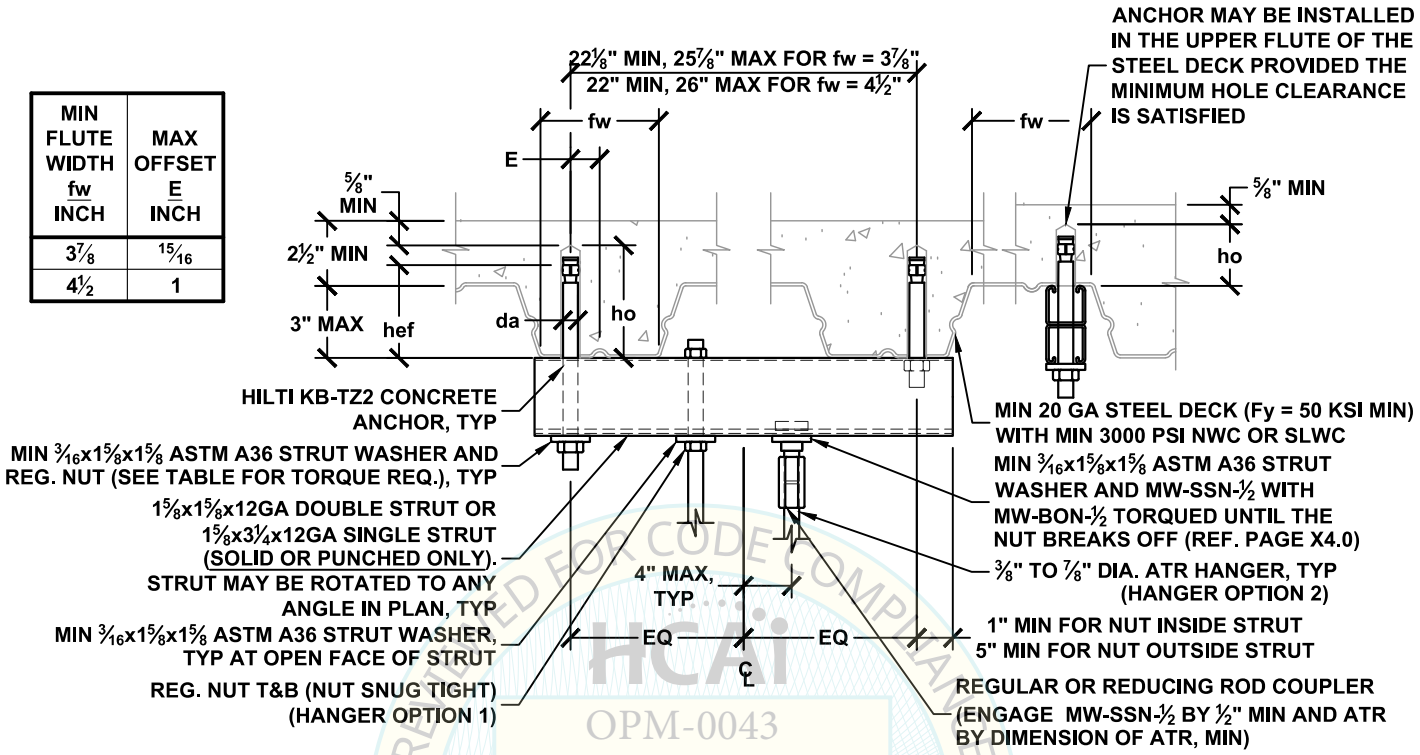

HANGER ATTACHMENT TYPE	STEEL COMPONENT ALLOWABLE VERTICAL LOAD Ta LBS	HANGER ATTACHMENT TYPE	CONCRETE ANCHOR ALLOWABLE VERTICAL LOAD Tac [1] LBS	ATR HANGER DIA. INCH	HILTI KB-TZ2 CONCRETE ANCHOR (ICC ESR-4266) SPECIAL INSPECTION REQ'D					
					DIA. da INCH	MIN EFF. EMBED. hef INCH	MIN HOLE DEPTH ho INCH	MIN SPACING Smin INCH	MIN END DIST. Cmin INCH	TORQUE REQ'D FT-LBS
38A TO 38M	1860	38A TO 38L	1440	⅜	⅜	2½	3¼	MAX OF: 3*hef OR 1.5*FLUTE WIDTH	3¾	30
50A TO 50M	1860	50A TO 50L	1440	½						
63A TO 63M	1860	63A TO 63L	1440	⅝						
75A TO 75M	1860	75A TO 75L	1440	¾						
88A TO 88M	1860	88A TO 88L	1440	⅞						
38A TO 38M	1860	38A TO 38N	2010	⅜	½	3¼	4¼	MAX OF: 3*hef OR 1.5*FLUTE WIDTH	4⅞	50
50A TO 50M	1860	50A TO 50N	2010	½						
63A TO 63M	1860	63A TO 63N	2010	⅝						
75A TO 75M	1860	75A TO 75N	2010	¾						
88A TO 88M	1860	88A TO 88N	2010	⅞						

SEE DETAIL M0.00 FOR SECTION NOTES

[1] ALLOWABLE LOADS HAVE BEEN INCREASED BY A FACTOR OF 1.2 FOR LOAD COMBINATIONS INCLUDING OVERSTRENGTH, Ω_0, PER ASCE 7-10 SEC. 12.4.3.3 OR ASCE 7-16 SEC. 2.4.5.

HCAI OPM-0043
REVIEWED FOR CODE COMPLIANCE
BY: William Staehlin
DATE: 1/23/2023
CALIFORNIA BUILDING CODE, 2019

MASON WEST
1601 E. Miraloma Ave. Placentia, CA 92870
TEL (714) 630 - 0701, www.masonwest.com

Jiefu "Jeff" Zhang, SE
California SE No. S5270

PAGE
M2.131.1

HANGER ATTACHMENT
TO CONCRETE FILLED METAL DECK
WITH (2) HILTI KB-TZ2 CARBON STEEL CONCRETE ANCHORS

MIN FLUTE WIDTH fw INCH	MAX OFFSET E INCH
3⅞	15⁄16
4½	1

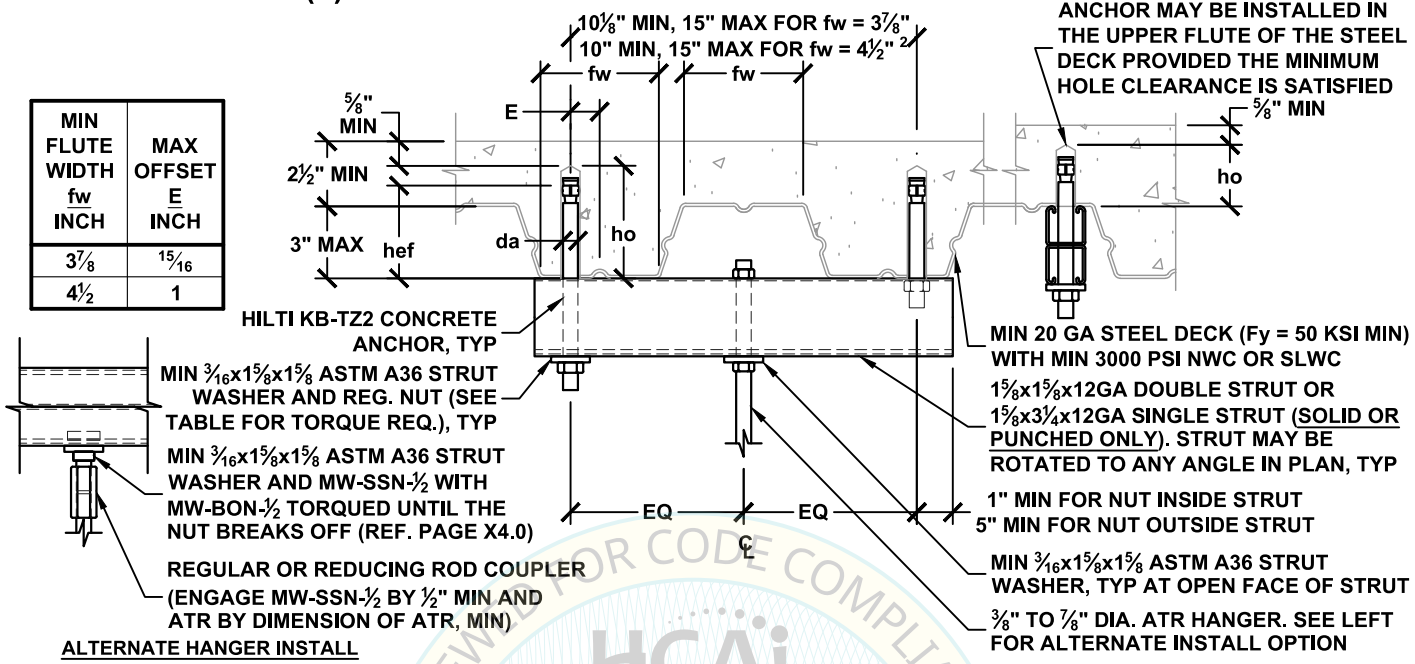

ALTERNATE HANGER INSTALL

HANGER ATTACHMENT TYPE	STEEL COMPONENT ALLOWABLE VERTICAL LOAD Ta LBS	HANGER ATTACHMENT TYPE	CONCRETE ANCHOR ALLOWABLE VERTICAL LOAD Tac [1] LBS	ATR HANGER DIA. INCH	HILTI KB-TZ2 CONCRETE ANCHOR (ICC ESR-4266) SPECIAL INSPECTION REQ'D					
					DIA. da INCH	MIN EFF. EMBED. hef INCH	MIN HOLE DEPTH ho INCH	MIN SPACING Smin INCH	MIN END DIST. Cmin INCH	TORQUE REQ'D FT-LBS
38A TO 38N	2400	38A TO 38M	1960	⅜	⅜	2½	3¼	MAX OF: 3*hef OR 1.5*FLUTE WIDTH	3¾	30
50A TO 50P	2620	50A TO 50M	1960	½						
63A TO 63P	2620	63A TO 63M	1960	⅝						
75A TO 75P	2620	75A TO 75M	1960	¾						
88A TO 88P	2620	88A TO 88M	1960	⅞						
38A TO 38N	2400	38A TO 38P	2740	⅜	½	3¼	4¼	MAX OF: 3*hef OR 1.5*FLUTE WIDTH	4⅞	50
50A TO 50P	2620	50A TO 50P	2740	½						
63A TO 63P	2620	63A TO 63P	2740	⅝						
75A TO 75P	2620	75A TO 75P	2740	¾						
88A TO 88P	2620	88A TO 88P	2740	⅞						
38A TO 38N	2400	38A TO 38Q	3600	⅜	⅝	4	4¾	MAX OF: 3*hef OR 1.5*FLUTE WIDTH	6	40
50A TO 50P	2620	50A TO 50Q	3600	½						
63A TO 63P	2620	63A TO 63Q	3600	⅝						
75A TO 75P	2620	75A TO 75Q	3600	¾						
88A TO 88P	2620	88A TO 88Q	3600	⅞						

SEE DETAIL M0.00 FOR SECTION NOTES

[1] ALLOWABLE LOADS HAVE BEEN INCREASED BY A FACTOR OF 1.2 FOR LOAD COMBINATIONS INCLUDING OVERSTRENGTH, Ω_0, PER ASCE 7-10 SEC. 12.4.3.3 OR ASCE 7-16 SEC. 2.4.5.

[2] WHEN THE BOLT CENTERLINE DISTANCE EXCEEDS 13⅞" FOR fw = 3⅞" OR 14" FOR fw = 4½", THE STRUT MUST BE ROTATED TO COMPLY TO THE DETAIL.

MASON WEST
1601 E. Miraloma Ave. Placentia, CA 92870
TEL (714) 630 - 0701, www.masonwest.com

Jiefu "Jeff" Zhang, SE
California SE No. S5270

PAGE
M2.131.2

HCAi
OPM-0043
BY: William Staehlin
UPDATE: 01/23/2023
REVIEWED FOR CODE COMPLIANCE
CALIFORNIA BUILDING CODE, 2022

HANGER ATTACHMENT
TO CONCRETE FILLED METAL DECK
WITH (1) HILTI KB-TZ2 CARBON STEEL CONCRETE ANCHOR

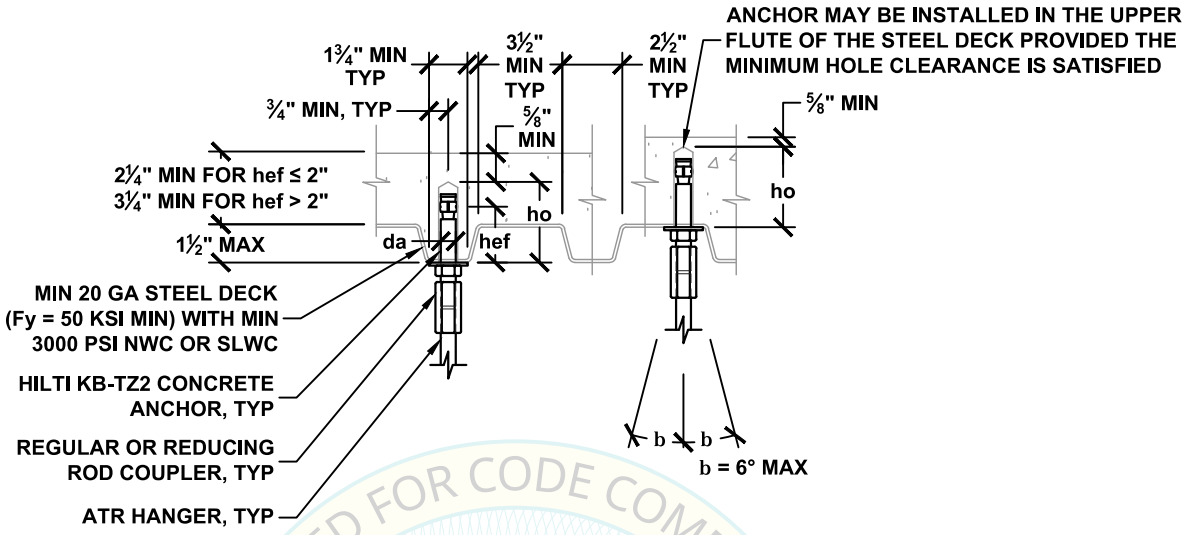

HANGER ATTACHMENT TYPE	ALLOWABLE VERTICAL LOAD Ta [1] LBS	MIN ATR HANGER DIA. INCH	HILTI KB-TZ2 CONCRETE ANCHOR (ICC ESR-4266) SPECIAL INSPECTION REQ'D					
			DIA. da INCH	MIN EFF. EMBED hef INCH	MIN HOLE DEPTH ho INCH	MIN SPACING Smin INCH	MIN END DIST. Cmin INCH	TORQUE REQ'D FT-LBS
38A TO 38J	870	⅜	⅜	2	2¾	6	3	30
38A TO 38G	610	⅜	½	2	2¾	6	3	50
50A TO 50G	610	½						
63A TO 63G	610	⅝						
38A TO 38H	770	⅜	½	3¼	4¼	9¾	4⅞	50
50A TO 50H	770	½						
63A TO 63H	770	⅝						
50A TO 50K	1080	½	⅝	2¾	3¾	8¼	4⅛	40
63A TO 63K	1080	⅝						
75A TO 75K	1080	¾						

SEE DETAIL M0.00 FOR SECTION NOTES

[1] ALLOWABLE LOADS HAVE BEEN INCREASED BY A FACTOR OF 1.2 FOR LOAD COMBINATIONS INCLUDING OVERSTRENGTH, Ω_0, PER ASCE 7-10 SEC. 12.4.3.3 OR ASCE 7-16 SEC. 2.4.5.

REVIEWED FOR CODE COMPLIANCE
HCAi
OPM-0043
BY: William Staehlin
DATE: 01/23/2023
CBC 2019 BUILDING CODE

MASON WEST
1601 E. Miraloma Ave. Placentia, CA 92870
TEL (714) 630 - 0701, www.masonwest.com

Jiefu "Jeff" Zhang, SE
California SE No. S5270

HANGER ATTACHMENT
TO CONCRETE FILLED METAL DECK
WITH (2) HILTI KB-TZ2 CARBON STEEL CONCRETE ANCHORS

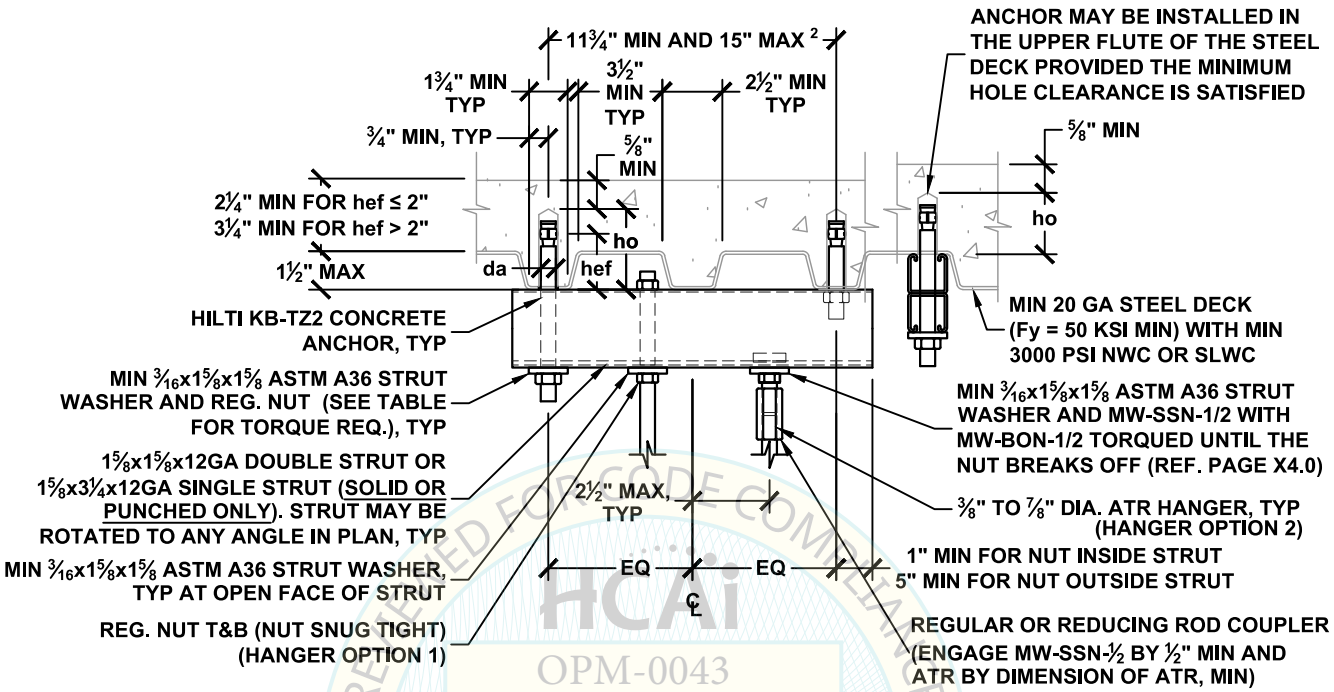

HANGER ATTACHMENT TYPE	STEEL COMPONENT ALLOWABLE VERTICAL LOAD Ta LBS	HANGER ATTACHMENT TYPE	CONCRETE ANCHOR ALLOWABLE VERTICAL LOAD Tac [1] LBS	ATR HANGER DIA. INCH	HILTI KB-TZ2 CONCRETE ANCHOR (ICC ESR-4266) SPECIAL INSPECTION REQ'D					
					DIA. da INCH	MIN EFF. EMBED. hef INCH	MIN HOLE DEPTH ho INCH	MIN SPACING Smin INCH	MIN END DIST. Cmin INCH	TORQUE REQ'D FT-LBS
38A TO 38N	2400	38A TO 38K	1230	⅜	⅜	2	2¾	6	3	30
50A TO 50P	2620	50A TO 50K	1230	½						
63A TO 63P	2620	63A TO 63K	1230	⅝						
75A TO 75P	2620	75A TO 75K	1230	¾						
88A TO 88P	2620	88A TO 88K	1230	⅞						
38A TO 38N	2400	38A TO 38L	1520	⅜	⅝	2¾	3¾	8¼	4⅛	40
50A TO 50P	2620	50A TO 50L	1520	½						
63A TO 63P	2620	63A TO 63L	1520	⅝						
75A TO 75P	2620	75A TO 75L	1520	¾						
88A TO 88P	2620	88A TO 88L	1520	⅞						

SEE DETAIL M0.00 FOR SECTION NOTES

[1] ALLOWABLE LOADS HAVE BEEN INCREASED BY A FACTOR OF 1.2 FOR LOAD COMBINATIONS INCLUDING OVERSTRENGTH, Ω_0, PER ASCE 7-10 SEC. 12.4.3.3 OR ASCE 7-16 SEC. 2.4.5.

[2] WHEN THE BOLT CENTERLINE DISTANCE EXCEEDS 12¼", THE STRUT MUST BE ROTATED TO COMPLY TO THE DETAIL.

MASON WEST
1601 E. Miraloma Ave. Placentia, CA 92870
TEL (714) 630 - 0701, www.masonwest.com

Jiefu "Jeff" Zhang, SE
California SE No. S5270

PAGE
M2.134

HCAi
OPM-0043
BY: William Staehlin
DATE: 1/23/2023
REVIEWED FOR CODE COMPLIANCE
CALIFORNIA BUILDING CODE (CBC)

HANGER ATTACHMENT
TO CONCRETE FILLED METAL DECK
WITH (2) HILTI KB-TZ2 CARBON STEEL CONCRETE ANCHORS

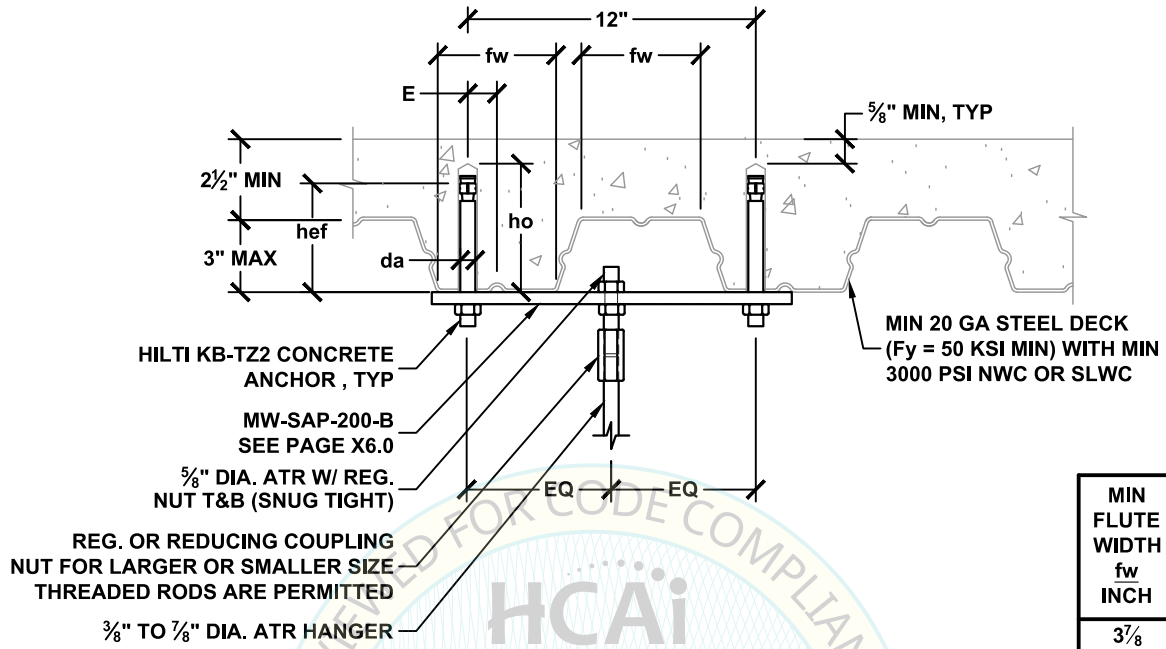

MIN FLUTE WIDTH fw INCH	MAX OFFSET E INCH
3⅞	15/16
4½	1

HANGER ATTACHMENT TYPE	STEEL COMPONENT ALLOWABLE VERTICAL LOAD Ta LBS	HANGER ATTACHMENT TYPE	CONCRETE ANCHOR ALLOWABLE VERTICAL LOAD Tac [1] LBS	ATR HANGER DIA. INCH	HILTI KB-TZ2 CONCRETE ANCHOR (ICC ESR-4266) SPECIAL INSPECTION REQ'D					
					DIA. da INCH	MIN EFF. EMBED. hef INCH	MIN HOLE DEPTH ho INCH	MIN SPACING Smin INCH	MIN END DIST. Cmin INCH	TORQUE REQ'D FT-LBS
38A TO 38M	1930	38A TO 38P	3220	3/8	5/8	2¾	3¾	MAX OF: 3*hef OR 1.5*FLUTE WIDTH	4⅛	40
50A TO 50M	1930	50A TO 50P	3220	½						
63A TO 63M	1930	63A TO 63P	3220	5/8						
75A TO 75M	1930	75A TO 75P	3220	¾						
88A TO 88M	1930	88A TO 88P	3220	7/8						
38A TO 38M	1930	38A TO 38Q	3600	3/8	5/8	4	4¾	MAX OF: 3*hef OR 1.5*FLUTE WIDTH	6	40
50A TO 50M	1930	50A TO 50Q	3600	½						
63A TO 63M	1930	63A TO 63Q	3600	5/8						
75A TO 75M	1930	75A TO 75Q	3600	¾						
88A TO 88M	1930	88A TO 88Q	3600	7/8						

SEE DETAIL M0.00 FOR SECTION NOTES

[1] ALLOWABLE LOADS HAVE BEEN INCREASED BY A FACTOR OF 1.2 FOR LOAD COMBINATIONS INCLUDING OVERSTRENGTH, Ω_0, PER ASCE 7-10 SEC. 12.4.3.3 OR ASCE 7-16 SEC. 2.4.5.

REVIEWED FOR CODE COMPLIANCE
HCAi
OPM-0043
BY: William Staehlin
DATE: 01/23/2023
CALIFORNIA BUILDING CODE, 2022

MASON WEST
1601 E. Miraloma Ave. Placentia, CA 92870
TEL (714) 630 - 0701, www.masonwest.com

Jiefu "Jeff" Zhang, SE
California SE No. S5270

PAGE
M2.135

HANGER ATTACHMENT
TO CONCRETE FILLED METAL DECK
WITH (4) HILTI KB-TZ2 CARBON STEEL CONCRETE ANCHORS

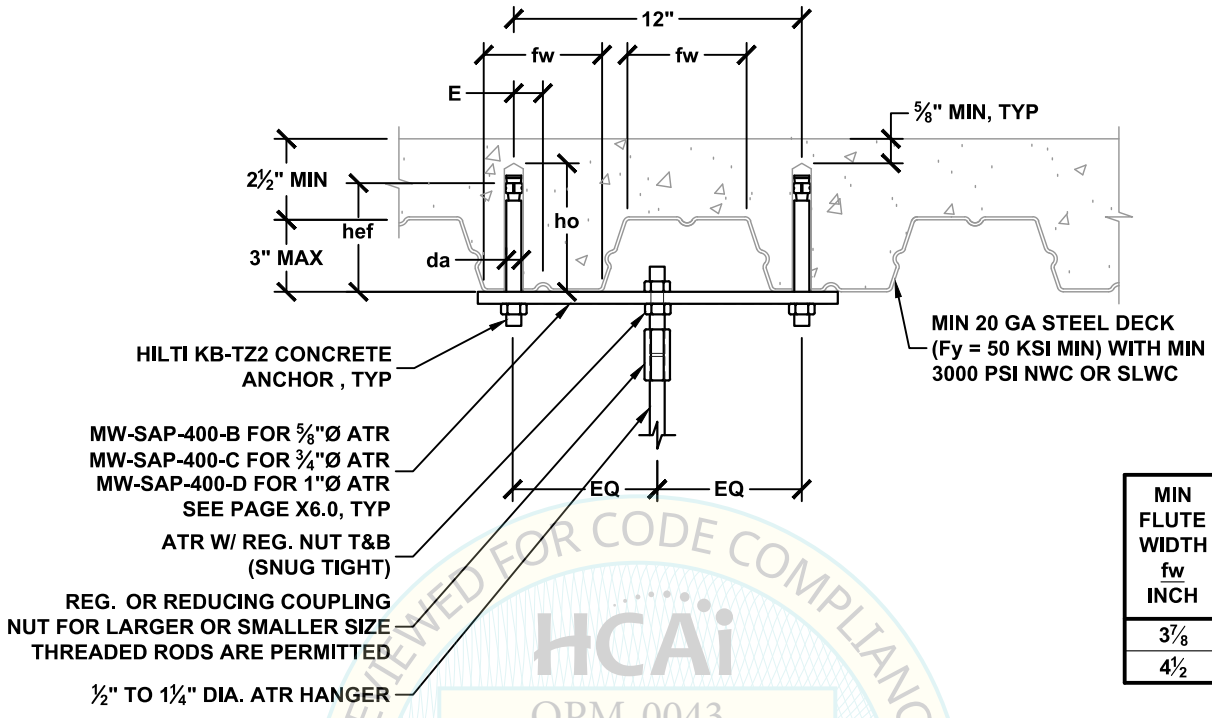

MIN FLUTE WIDTH fw INCH	MAX OFFSET E INCH
3⅞	15/16
4½	1

REVIEWED FOR CODE COMPLIANCE
HCAi
OPM-0043
BY: William Staehlin
DATE: 01/23/2023
CALIFORNIA BUILDING CODE

HANGER ATTACHMENT TYPE	STEEL COMPONENT ALLOWABLE VERTICAL LOAD Ta LBS	HANGER ATTACHMENT TYPE	CONCRETE ANCHOR ALLOWABLE VERTICAL LOAD Tac [1] LBS	ATR HANGER DIA. INCH	HILTI KB-TZ2 CONCRETE ANCHOR (ICC ESR-4266) SPECIAL INSPECTION REQ'D					
					DIA. da INCH	MIN EFF. EMBED. hef INCH	MIN HOLE DEPTH ho INCH	MIN SPACING Smin INCH	MIN END DIST. Cmin INCH	TORQUE REQ'D FT-LBS
50A TO 50Q	3600	50A TO 50R	6440	½	5/8	2¾	3¾	MAX OF: 3*hef OR 1.5*FLUTE WIDTH	4⅛	40
63A TO 63Q	3600	63A TO 63R	6440	5/8						
75A TO 75Q	3500	75A TO 75R	6440	¾						
88A TO 88Q	3500	88A TO 88R	6440	⅞						
100A TO 100Q	3500	100A TO 125R	6440	1						
125A TO 125Q	3500	100A TO 125R	6440	1¼						
50A TO 50Q	3600	50A TO 50R	7200	½	5/8	4	4¾	MAX OF: 3*hef OR 1.5*FLUTE WIDTH	6	40
63A TO 63Q	3600	63A TO 63R	7200	5/8						
75A TO 75Q	3500	75A TO 75R	7200	¾						
88A TO 88Q	3500	88A TO 88R	7200	⅞						
100A TO 100Q	3500	100A TO 125R	7200	1						
125A TO 125Q	3500	100A TO 125R	7200	1¼						

SEE DETAIL M0.00 FOR SECTION NOTES

[1] ALLOWABLE LOADS HAVE BEEN INCREASED BY A FACTOR OF 1.2 FOR LOAD COMBINATIONS INCLUDING OVERSTRENGTH, Ω_0, PER ASCE 7-10 SEC. 12.4.3.3 OR ASCE 7-16 SEC. 2.4.5.

MASON WEST
1601 E. Miraloma Ave. Placentia, CA 92870
TEL (714) 630 - 0701, www.masonwest.com

Jiefu "Jeff" Zhang, SE
California SE No. S5270

PAGE
M2.136

HANGER ATTACHMENT
TO STEEL BEAM OR OPEN WEB STEEL TRUSS
WITH SELF-DRILLING SELF-TAPPING METAL SCREWS

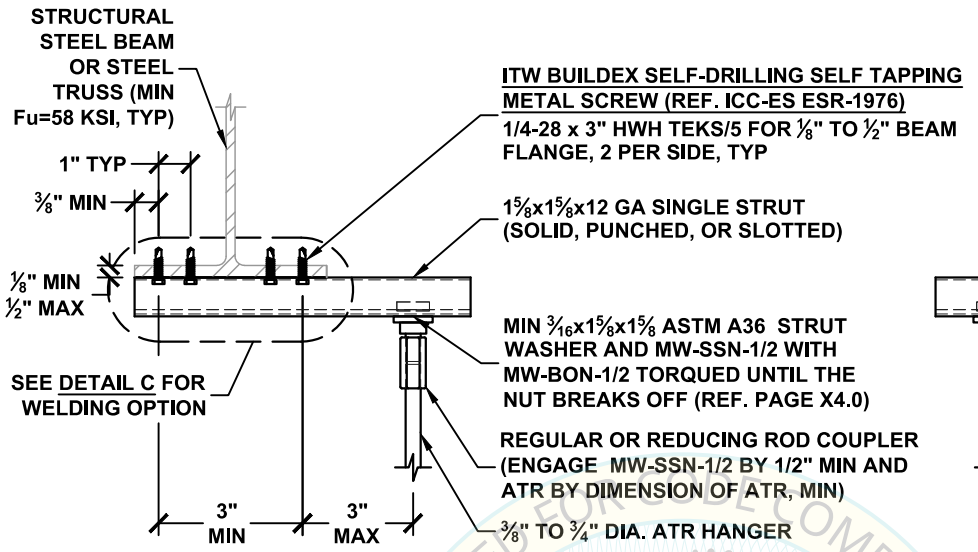

DETAIL A

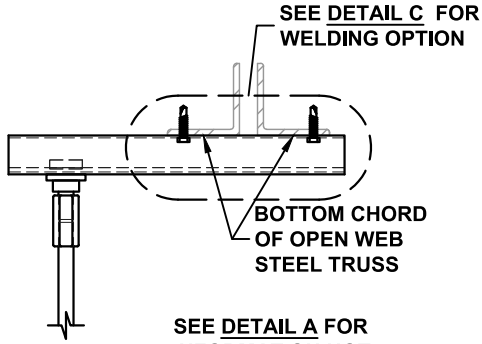

SEE DETAIL A FOR INFORMATION NOT SHOWN IN THIS DETAIL

DETAIL B

HCAi
OPM-0043
BY: William Staehlin
DATE: 01/23/2023
REVIEWED FOR CODE COMPLIANCE
CALIFORNIA BUILDING STANDARDS COMMISSION

HANGER ATTACHMENT TYPE	ALLOWABLE VERTICAL LOAD LBS	ATR HANGER DIA. INCH
38A TO 38F	510	3/8
50A TO 50F	510	1/2
63A TO 63F	510	5/8
75A TO 75F	510	3/4

1 SEE DETAIL M0.00 FOR SECTION NOTES
2 ATTACHMENT TO STEEL BEAM SHALL NOT BE PLACED WITHIN THE PROTECTED ZONE AS DEFINED IN AISC 341.

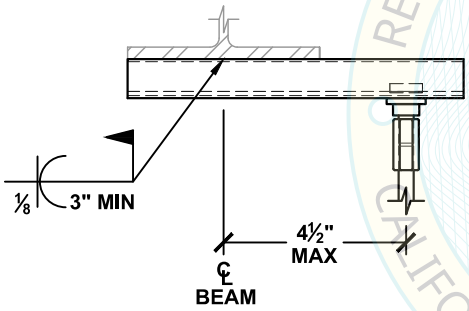

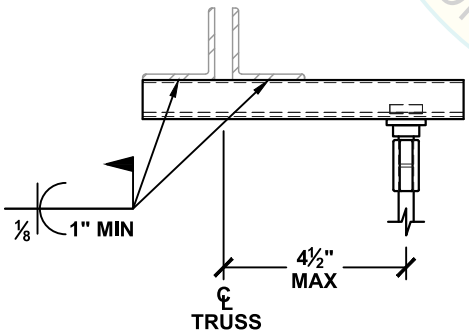

DETAIL C
WELDING OPTION

NOTE: ALL WELDS TO BE MINIMUM 70xx ELECTRODE WELDS

MASON WEST
1601 E. Miraloma Ave. Placentia, CA 92870
TEL (714) 630 - 0701, www.masonwest.com

Jiefu "Jeff" Zhang, SE
California SE No. S5270

PAGE
M3.10

HANGER ATTACHMENT
TO STEEL BEAM OR OPEN WEB STEEL TRUSS
WITH SELF-DRILLING SELF-TAPPING METAL SCREWS

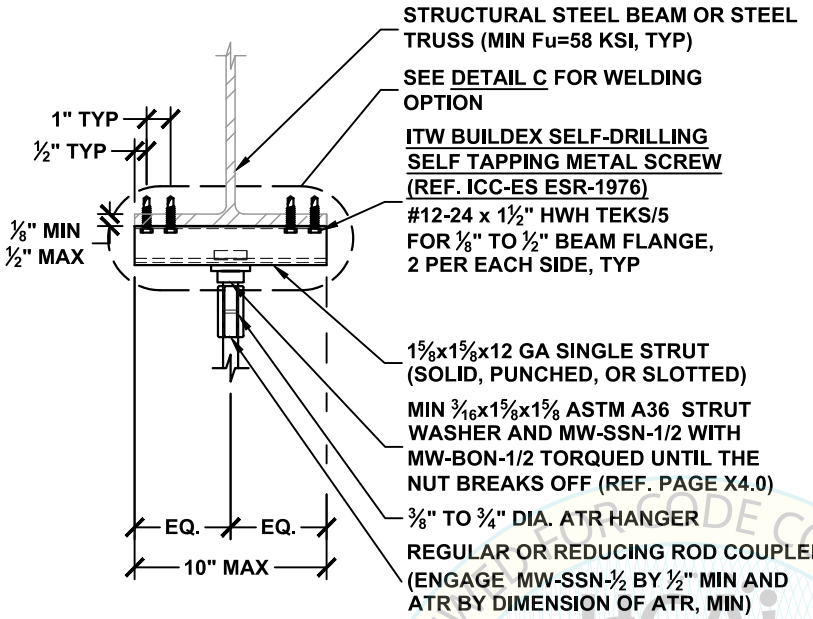

DETAIL A

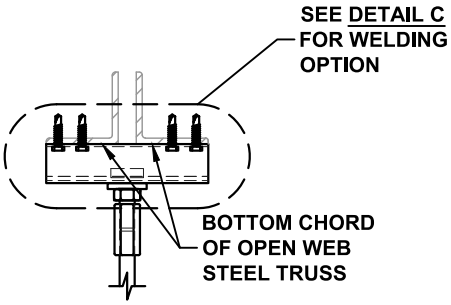

SEE DETAIL A FOR INFORMATION NOT SHOWN IN THIS DETAIL

DETAIL B

HANGER ATTACHMENT TYPE	ALLOWABLE VERTICAL LOAD LBS	ATR HANGER DIA. INCH
38A TO 38M	1700	⅜
50A TO 50M	1700	½
63A TO 63M	1700	⅝
75A TO 75M	1700	¾

1 SEE DETAIL M0.00 FOR SECTION NOTES
2 ATTACHMENT TO STEEL BEAM SHALL NOT BE PLACED WITHIN THE PROTECTED ZONE AS DEFINED IN AISC 341.

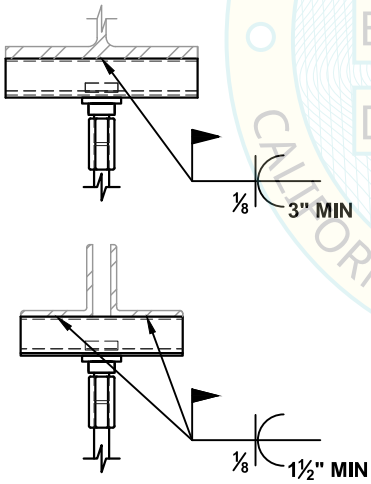

DETAIL C
WELDING OPTION

NOTE: ALL WELDS TO BE MINIMUM 70xx ELECTRODE WELDS

HCAi
OPM-0043
BY: William Staehlin
DATE: 01/23/2023
REVIEWED FOR CODE COMPLIANCE
CALIFORNIA BUILDING STANDARDS

MASON WEST
1601 E. Miraloma Ave. Placentia, CA 92870
TEL (714) 630 - 0701, www.masonwest.com

Jiefu "Jeff" Zhang, SE
California SE No. S5270

PAGE
M3.11

ATR HANGER ATTACHMENT
TO STEEL BEAM
WITH WELDED BEAM ATTACHMENT

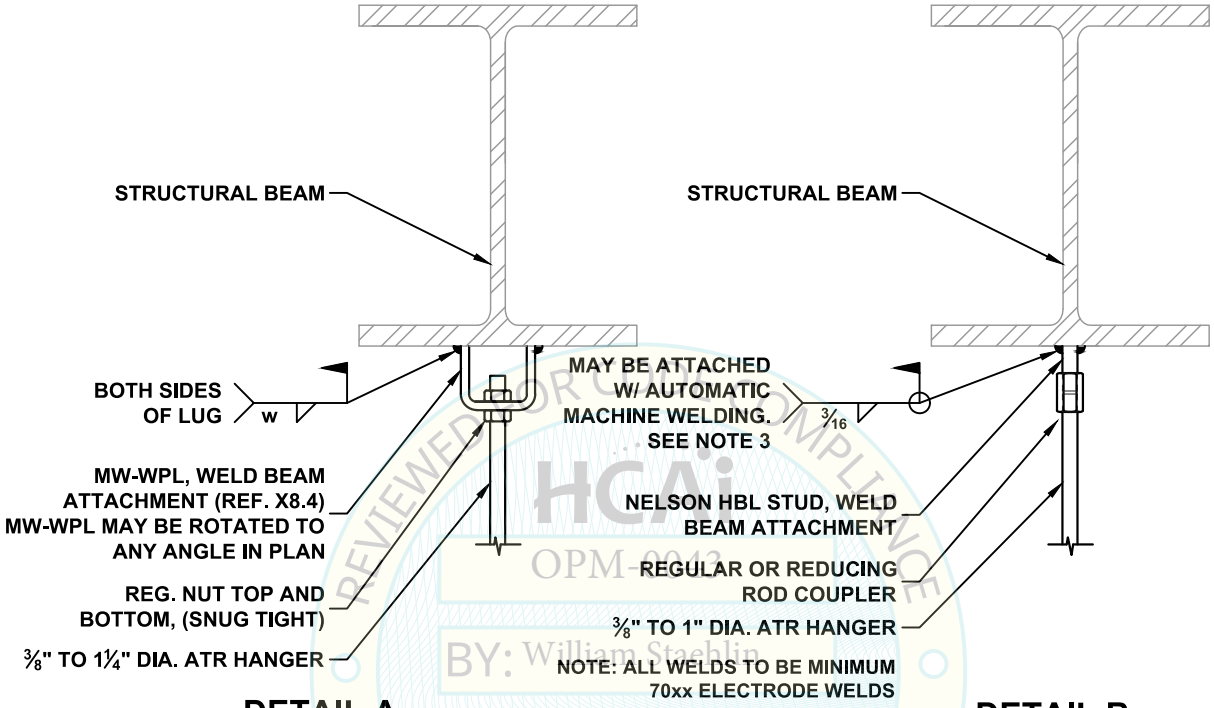

DETAIL A **DETAIL B**

HANGER ATTACHMENT TYPE	DETAIL A		DETAIL B	ALLOWABLE VERTICAL LOAD LBS	ATR HANGER DIA. INCH
	MW-WPL LUG	w, WELD SIZE INCH	NELSON HBL STUD DIA. INCH		
38A TO 38H	MW-WPL-38	1/8	3/8	720	3/8
50A TO 50L	MW-WPL-50	3/16	1/2	1320	1/2
63A TO 63P	MW-WPL-63	3/16	5/8	2880	5/8
75A TO 75Q	MW-WPL-75	1/4	3/4	4800	3/4
75A TO 75S	MW-WPL-75A	5/16	N/A	8000	3/4
88A TO 88R	MW-WPL-88	5/16	7/8	6900	7/8
100A TO 100S	MW-WPL-100	5/16	1	8660	1
125A TO 125T	MW-WPL-125	5/16	N/A	11400	1¼

1. SEE DETAIL M0.00 FOR SECTION NOTES
2. WELDED ATTACHMENT TO STEEL BEAM SHALL NOT BE PLACED WITHIN THE PROTECTED ZONE AS DEFINED IN AISC 341.
3. AUTOMATIC MACHINE WELDING OF NELSON HBL STUD SHALL COMPLY WITH AWS D1.1, SECTION 6: STUD WELDING.
4. NELSON HBL STUD TO BE MINIMUM 61KSI TENSILE STRENGTH MILD STEEL CONFORMING TO ASTM A108.

REVIEWED FOR CODE COMPLIANCE
HCAi
OPM-0043
BY: William Staehlin
DATE: 01/23/2023
CALIFORNIA BUILDING CODE 2022

MASON WEST
1601 E. Miraloma Ave. Placentia, CA 92870
TEL (714) 630 - 0701, www.masonwest.com

Jiefu "Jeff" Zhang, SE
California SE No. S5270

PAGE
M3.12

ATR HANGER ATTACHMENT
TO OPEN WEB STEEL TRUSS

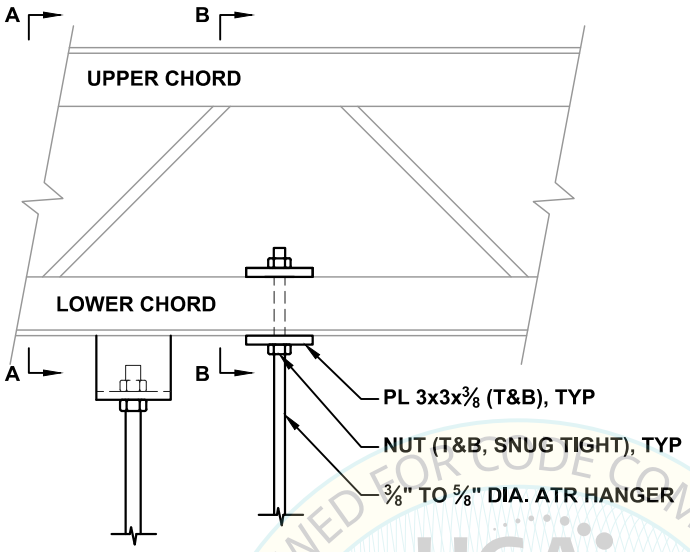

OPTION 2 OPTION 1

ELEVATION VIEW

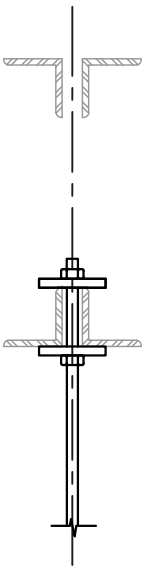

VIEW B-B

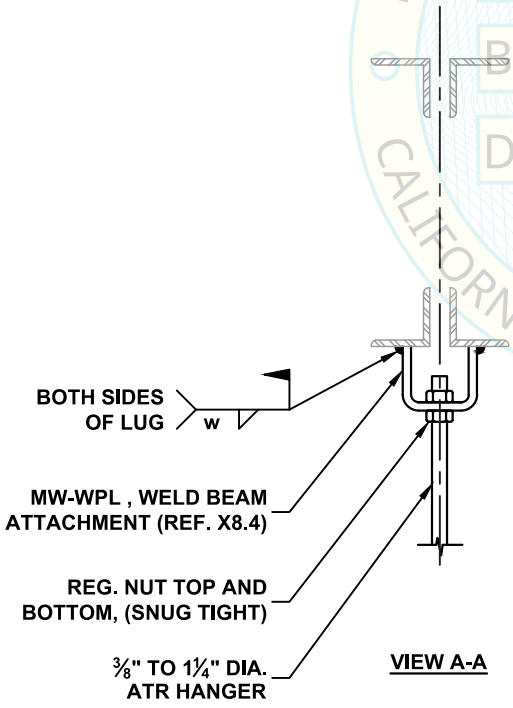

VIEW A-A

HANGER ATTACHMENT TYPE	OPTION 1 PLATES	OPTION 2 MW-WPL LUG	OPTION 2 w, WELD SIZE INCH	ALLOWABLE VERTICAL LOAD LBS	ATR HANGER DIA. INCH
38A TO 38H	(2) PL3x3x3/8	MW-WPL-38	1/8	720	3/8
50A TO 50L		MW-WPL-50	3/16	1320	1/2
63A TO 63P		MW-WPL-63	3/16	2880	5/8
75A TO 75Q	N/A	MW-WPL-75	1/4	4800	3/4
75A TO 75S	N/A	MW-WPL-75A	5/16	8000	3/4
88A TO 88R	N/A	MW-WPL-88	5/16	6900	7/8
100A TO 100S	N/A	MW-WPL-100	5/16	8880	1
125A TO 125T	N/A	MW-WPL-125	5/16	11400	1¼

1 SEE DETAIL M0.00 FOR SECTION NOTES
2 WELDED ATTACHMENT TO STEEL BEAM SHALL NOT BE PLACED WITHIN THE PROTECTED ZONE AS DEFINED IN AISC 341.

REVIEWED FOR CODE COMPLIANCE
CALIFORNIA BUILDING CODE 2019
HCAi
OPM-0043
BY: William Staehlin
DATE: 01/23/2023

MASON WEST
1601 E. Miraloma Ave. Placentia, CA 92870
TEL (714) 630 - 0701, www.masonwest.com

Jiefu "Jeff" Zhang, SE
California SE No. S5270

PAGE
M3.13

ATR HANGER ATTACHMENT
TO STEEL BEAM
WITH STEEL BEAM CLAMPS

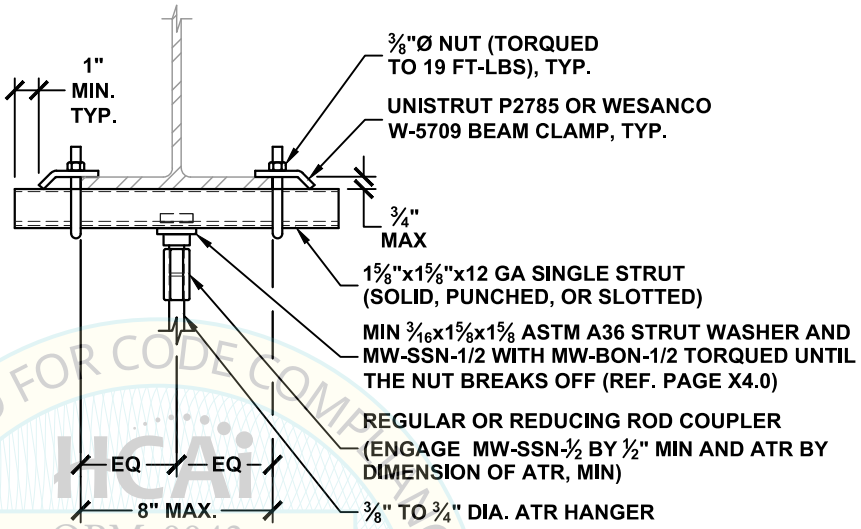

REVIEWED FOR CODE COMPLIANCE
HCAI
OPM-0043
BY: William Staehlin
DATE: 01/23/2023
CALIFORNIA BUILDING CODE, 2022

HANGER CONNECTION TYPE	ALLOWABLE VERTICAL LOAD LBS	ATR HANGER DIA. INCH
38A TO 38N	2000	⅜
50A TO 50N	2000	½
63A TO 63N	2000	⅝
75A TO 75N	2000	¾

1 SEE DETAIL M0.00 FOR SECTION NOTES
2 ATTACHMENT TO STEEL BEAM SHALL NOT BE PLACED WITHIN THE PROTECTED ZONE AS DEFINED IN AISC 341.

MASON WEST
1601 E. Miraloma Ave. Placentia, CA 92870
TEL (714) 630 - 0701, www.masonwest.com

Jiefu "Jeff" Zhang, SE
California SE No. S5270

PAGE
M3.14

ATR HANGER ATTACHMENT
TO STEEL BEAM
WITH (2) BADGER INDUSTRIES SBC158 SERIES STEEL BEAM CLAMPS

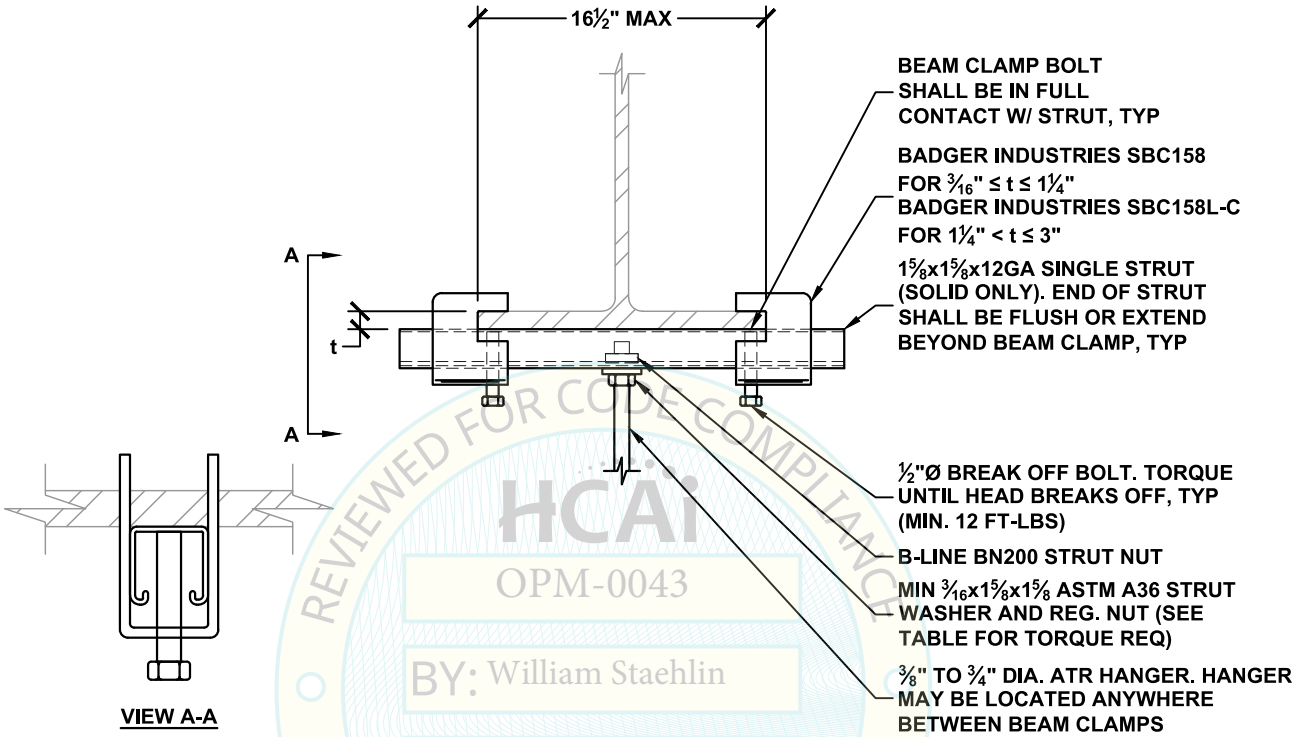

HCAi
OPM-0043
BY: William Staehlin
DATE: 01/23/2023
REVIEWED FOR CODE COMPLIANCE
CALIFORNIA BUILDING CODE 2022

FASTENER WITH STRUT NUT	
DIA. INCH	TORQUE REQ'D FT-LBS
⅜	19
½ - ¾	50

GRAVITY ONLY		GRAVITY & SEISMIC		ATR HANGER DIA. INCH
HANGER CONNECTION TYPE	ALLOWABLE VERTICAL LOAD LBS	HANGER CONNECTION TYPE	ALLOWABLE VERTICAL LOAD LBS	
38A TO 38H	730	38A TO 38M	1840	⅜
50A TO 50J	920	50A TO 50M	1840	½
63A TO 63J	920	63A TO 63M	1840	⅝
75A TO 75J	920	75A TO 75M	1840	¾

1 SEE DETAIL M0.00 FOR SECTION NOTES
2 ATTACHMENT TO STEEL BEAM SHALL NOT BE PLACED WITHIN THE PROTECTED ZONE AS DEFINED IN AISC 341.
3 WHEN USED FOR "GRAVITY & SEISMIC" LOADING, THE GRAVITY DEMAND SHALL NOT EXCEED THE "GRAVITY ONLY" ALLOWABLE LOAD.
4 BEAM CLAMPS SHALL NOT BE USED ON SHAPES WITH SLOPED FLANGES.

MASON WEST
1601 E. Miraloma Ave. Placentia, CA 92870
TEL (714) 630 - 0701, www.masonwest.com

Jiefu "Jeff" Zhang, SE
California SE No. S5270

PAGE
M3.14.1

ATR HANGER ATTACHMENT
TO STEEL BEAM
WITH (1) BADGER INDUSTRIES SBC158 SERIES STEEL BEAM CLAMP

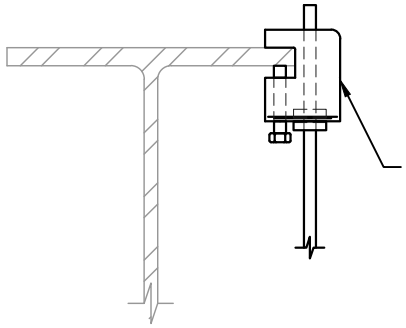

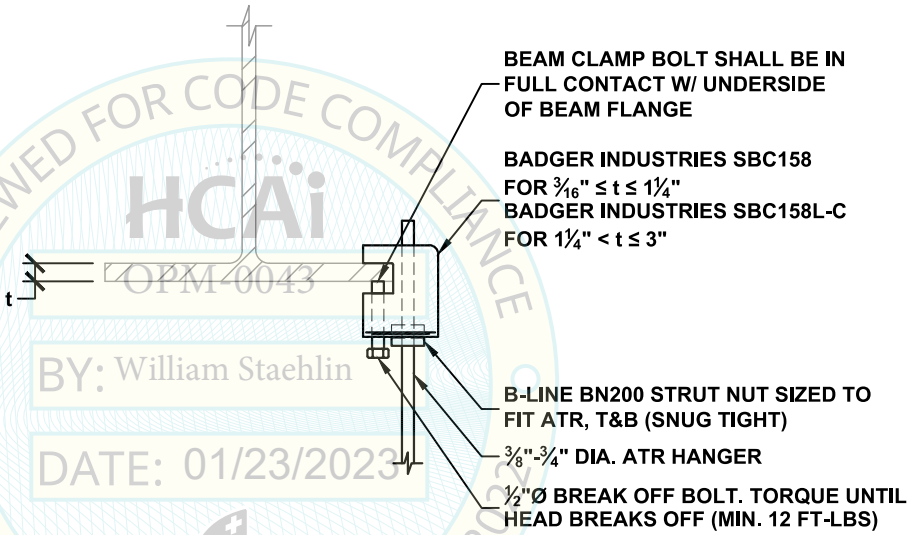

REVIEWED FOR CODE COMPLIANCE
HCAi
OPM-0043
BY: William Staehlin
DATE: 01/23/2023
CALIFORNIA BUILDING CODE 2022

GRAVITY ONLY		GRAVITY & SEISMIC		ATR HANGER DIA. INCH
HANGER CONNECTION TYPE	ALLOWABLE VERTICAL LOAD LBS	HANGER CONNECTION TYPE	ALLOWABLE VERTICAL LOAD LBS	
38A TO 38H	730	38A TO 38M	1940	⅜
50A TO 50J	970	50A TO 50M	1940	½
63A TO 63J	970	63A TO 63M	1940	⅝
75A TO 75J	970	75A TO 75M	1940	¾

1 SEE DETAIL M0.00 FOR SECTION NOTES
2 ATTACHMENT TO STEEL BEAM SHALL NOT BE PLACED WITHIN THE PROTECTED ZONE AS DEFINED IN AISC 341.
3 WHEN USED FOR "GRAVITY & SEISMIC" LOADING, THE GRAVITY DEMAND SHALL NOT EXCEED THE "GRAVITY ONLY" ALLOWABLE LOAD.
4 BEAM CLAMPS SHALL NOT BE USED ON SHAPES WITH SLOPED FLANGES.

MASON WEST
1601 E. Miraloma Ave. Placentia, CA 92870
TEL (714) 630 - 0701, www.masonwest.com

Jiefu "Jeff" Zhang, SE
California SE No. S5270

PAGE
M3.15

ATR HANGER ATTACHMENT
TO STEEL BEAM
WITH (2) BADGER INDUSTRIES SBC158 SERIES STEEL BEAM CLAMPS

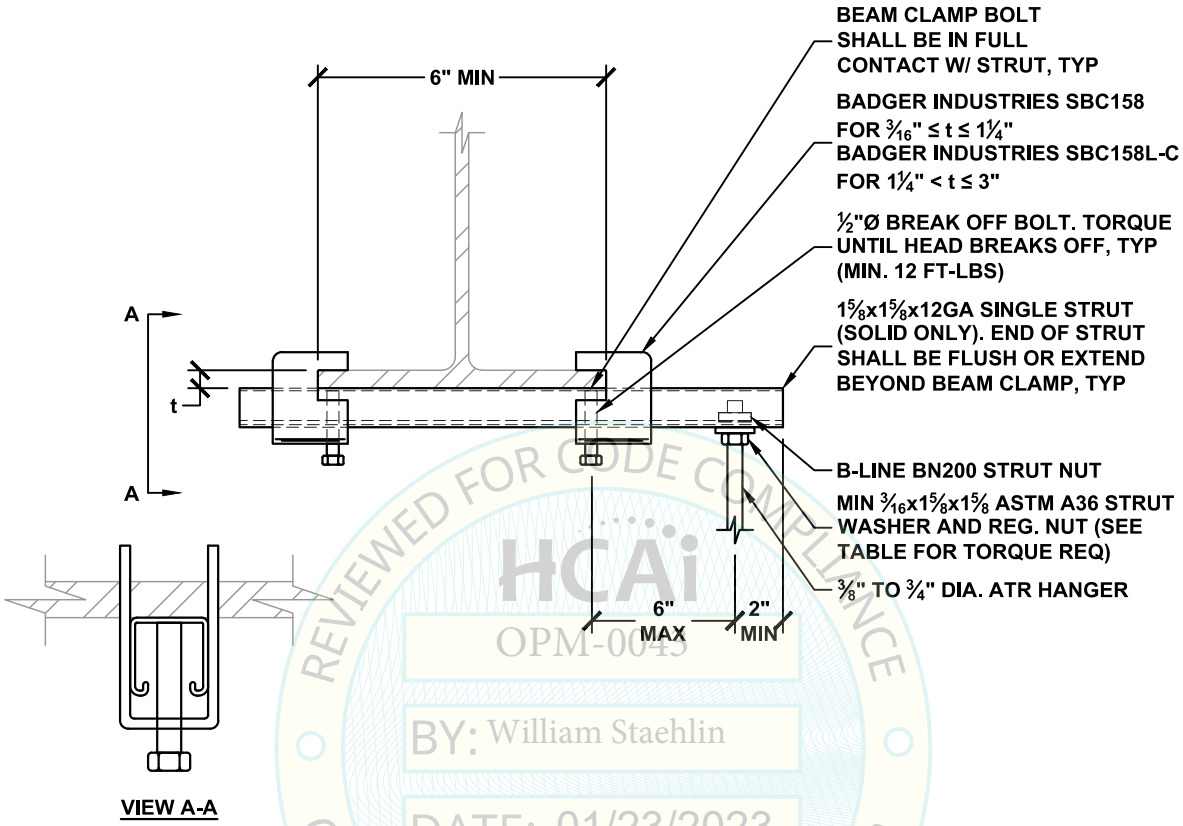

REVIEWED FOR CODE COMPLIANCE
HCAi
OPM-0043
BY: William Staehlin
DATE: 01/23/2023
CALIFORNIA BUILDING CODE 2022

FASTENER WITH STRUT NUT	
DIA. INCH	TORQUE REQ'D FT-LBS
3/8	19
1/2 - 3/4	50

GRAVITY ONLY		GRAVITY & SEISMIC		ATR HANGER DIA. INCH
HANGER CONNECTION TYPE	ALLOWABLE VERTICAL LOAD LBS	HANGER CONNECTION TYPE	ALLOWABLE VERTICAL LOAD LBS	
38A TO 38G	680	38A TO 38L	1350	3/8
50A TO 50G	680	50A TO 50L	1350	1/2
63A TO 63G	680	63A TO 63L	1350	5/8
75A TO 75G	680	75A TO 75L	1350	3/4

1. SEE DETAIL M0.00 FOR SECTION NOTES
2. ATTACHMENT TO STEEL BEAM SHALL NOT BE PLACED WITHIN THE PROTECTED ZONE AS DEFINED IN AISC 341.
3. WHEN USED FOR "GRAVITY & SEISMIC" LOADING, THE GRAVITY DEMAND SHALL NOT EXCEED THE "GRAVITY ONLY" ALLOWABLE LOAD.
4. BEAM CLAMPS SHALL NOT BE USED ON SHAPES WITH SLOPED FLANGES.

MASON WEST
1601 E. Miraloma Ave. Placentia, CA 92870
TEL (714) 630 - 0701, www.masonwest.com

Jiefu "Jeff" Zhang, SE
California SE No. S5270

PAGE
M3.16

ATR HANGER ATTACHMENT
TO CONCRETE FILLED METAL DECK
WITH (1) BADGER INDUSTRIES NDH38FV-W3 NO-DRILL™ HANGER

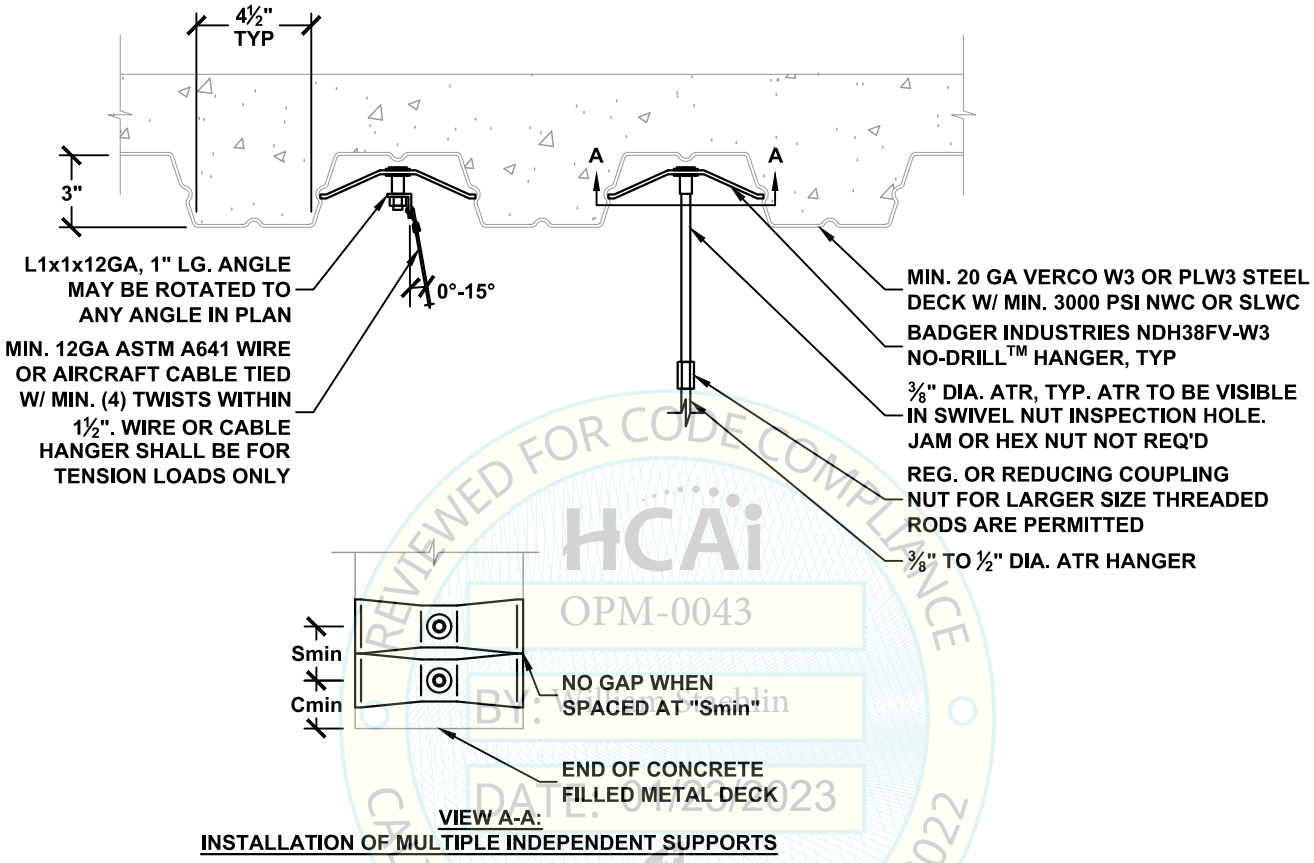

VIEW A-A:
INSTALLATION OF MULTIPLE INDEPENDENT SUPPORTS

GRAVITY ONLY		GRAVITY & SEISMIC		ATR HANGER DIA. INCH	MIN SPACING Smin INCH	MIN END DIST. Cmin INCH
HANGER CONNECTION TYPE	ALLOWABLE VERTICAL LOAD LBS	HANGER CONNECTION TYPE	ALLOWABLE VERTICAL LOAD LBS			
38A TO 38A	70	38A TO 38D	170	⅜	2½	1½
50A TO 50A	70	50A TO 50D	170	½	2½	1½

1 SEE DETAIL M0.00 FOR SECTION NOTES
2 WHEN USED FOR "GRAVITY & SEISMIC" LOADING, THE GRAVITY DEMAND SHALL NOT EXCEED THE "GRAVITY ONLY" ALLOWABLE LOAD.
3 PROXIMITY OR SPACING OF NEW OR EXISTING CONCRETE INSERTS OR DRILLED HOLE ANCHORS TO THE NDH DOES NOT IMPACT THE LISTED NDH CAPACITIES.

REVIEWED FOR CODE COMPLIANCE
HCAi
OPM-0043
BY: William Staehlin
DATE: 01/23/2023
CALIFORNIA BUILDING CODE 2022

MASON WEST
1601 E. Miraloma Ave. Placentia, CA 92870
TEL (714) 630 - 0701, www.masonwest.com

Jiefu "Jeff" Zhang, SE
California SE No. S5270

PAGE
M3.20

ATR HANGER ATTACHMENT
TO CONCRETE FILLED METAL DECK
WITH (2) BADGER INDUSTRIES NDH38FV-W3 NO-DRILL™ HANGERS

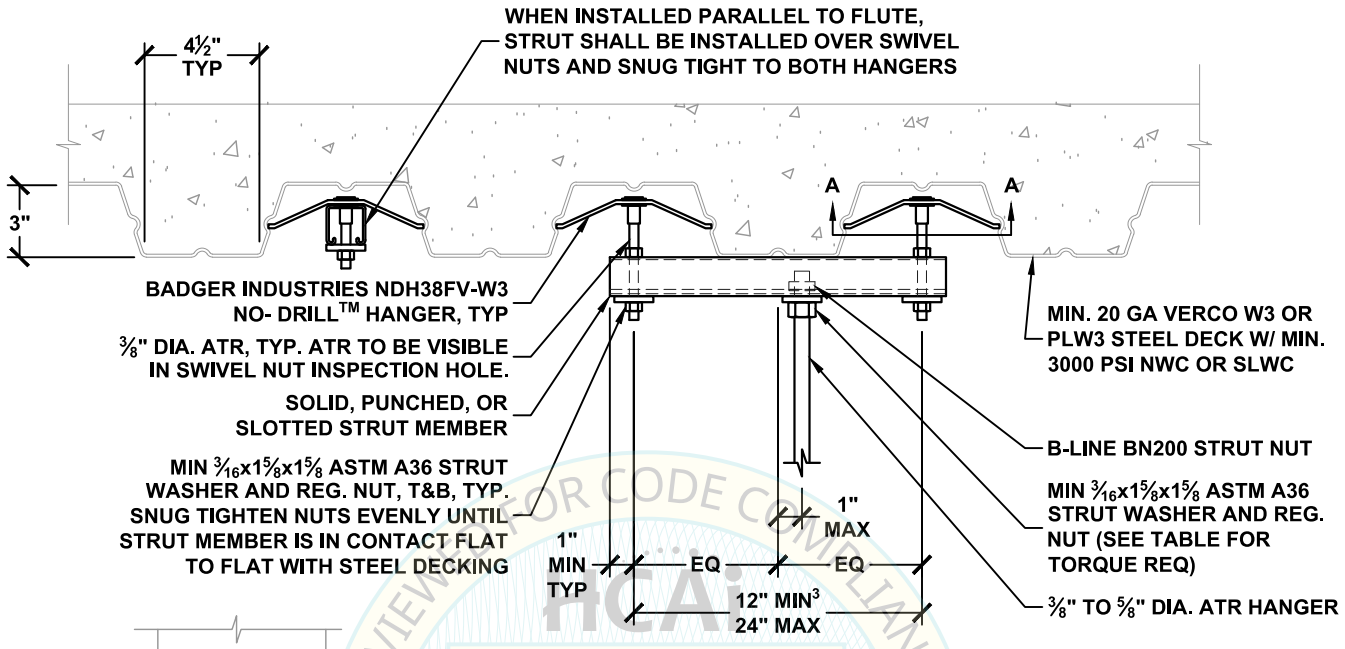

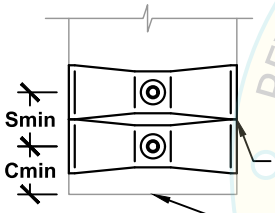

VIEW A-A:
INSTALLATION OF MULTIPLE INDEPENDENT SUPPORTS

FASTENER WITH STRUT NUT	
DIA. INCH	TORQUE REQ'D FT-LBS
⅜	19
½ - ⅝	50

STRUT MEMBER SIZE	GRAVITY ONLY		GRAVITY & SEISMIC		ATR HANGER DIA. INCH	MIN SPACING Smin INCH	MIN END DIST. Cmin INCH
	HANGER CONNECTION TYPE	ALLOWABLE VERTICAL LOAD LBS	HANGER CONNECTION TYPE	ALLOWABLE VERTICAL LOAD LBS			
13/16"x1⅝"x12GA SINGLE STRUT	38A TO 38A	110	38A TO 38C	220	⅜	2½	1½
	50A TO 50A	110	50A TO 50C	220	½	2½	1½
	63A TO 63A	110	63A TO 63C	220	⅝	2½	1½
1⅝"x1⅝"x12GA SINGLE STRUT	38A TO 38A	110	38A TO 38D	300	⅜	2½	1½
	50A TO 50A	110	50A TO 50D	300	½	2½	1½
	63A TO 63A	110	63A TO 63D	300	⅝	2½	1½

1 SEE DETAIL M0.00 FOR SECTION NOTES
2 WHEN USED FOR "GRAVITY & SEISMIC" LOADING, THE GRAVITY DEMAND SHALL NOT EXCEED THE "GRAVITY ONLY" ALLOWABLE LOAD.
3 MINIMUM SPACING REQUIREMENT DOES NOT APPLY WHEN STRUT IS INSTALLED PARALLEL TO FLUTE.
4 PROXIMITY OR SPACING OF NEW OR EXISTING CONCRETE INSERTS OR DRILLED HOLE ANCHORS TO THE NDH DOES NOT IMPACT THE LISTED NDH CAPACITIES.

MASON WEST
1601 E. Miraloma Ave. Placentia, CA 92870
TEL (714) 630 - 0701, www.masonwest.com

Jiefu "Jeff" Zhang, SE
California SE No. S5270

PAGE
M3.21

HCAi
REVIEWED FOR CODE COMPLIANCE
OPM-0043
By: William Staehlin
DATE: 01/23/2023
CALIFORNIA BUILDING CODE 2022

ATR HANGER ATTACHMENT
TO CONCRETE FILLED METAL DECK
WITH (1) BADGER INDUSTRIES NDH4S-W3 NO-DRILL™ HANGER

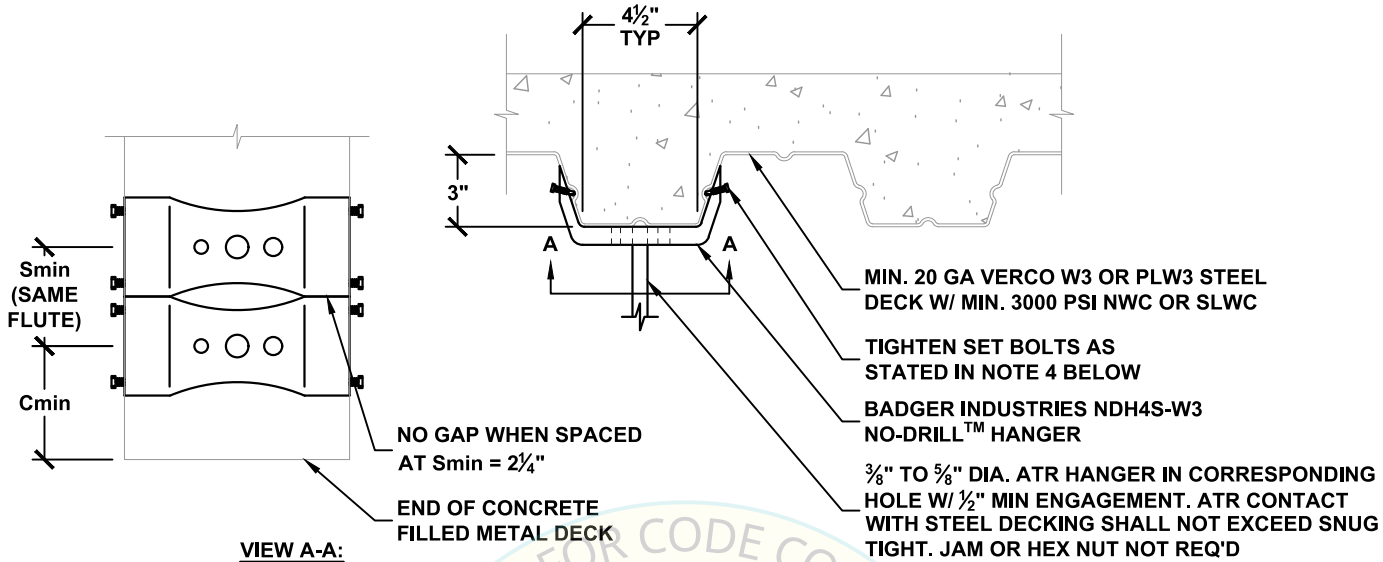

VIEW A-A:
INSTALLATION OF MULTIPLE INDEPENDENT SUPPORTS

GRAVITY ONLY		GRAVITY & SEISMIC		ATR HANGER DIA. INCH	MIN SPACING Smin INCH	MIN END DIST. Cmin INCH
HANGER CONNECTION TYPE	ALLOWABLE VERTICAL LOAD LBS	HANGER CONNECTION TYPE	ALLOWABLE VERTICAL LOAD LBS			
38A TO 38F	470	38A TO 38J	940	⅜	2¼	6
50A TO 50F	470	50A TO 50J	940	½		
63A TO 63F	470	63A TO 63J	940	⅝		
38A TO 38F	570	38A TO 38K	1140	⅜	6	6
50A TO 50F	570	50A TO 50K	1140	½		
63A TO 63F	570	63A TO 63K	1140	⅝		
38A TO 38G	630	38A TO 38L	1260	⅜	10	6
50A TO 50G	630	50A TO 50L	1260	½		
63A TO 63G	630	63A TO 63L	1260	⅝		
38A TO 38H	730	38A TO 38L	1460	⅜	14½	6
50A TO 50H	730	50A TO 50L	1460	½		
63A TO 63H	730	63A TO 63L	1460	⅝		

1. SEE DETAIL M0.00 FOR SECTION NOTES
2. WHEN USED FOR "GRAVITY & SEISMIC" LOADING, THE GRAVITY DEMAND SHALL NOT EXCEED THE "GRAVITY ONLY" ALLOWABLE LOAD.
3. PROXIMITY OR SPACING OF NEW OR EXISTING CONCRETE INSERTS OR DRILLED HOLE ANCHORS TO THE NDH DOES NOT IMPACT THE LISTED NDH CAPACITIES.
4. INSTALLATION: ALIGN THE LENGTH OF THE NDH4S-W3 TO BE PERPENDICULAR TO THE LENGTH OF THE STEEL DECKING GROOVES. WHILE HOLDING THE NDH4S-W3 IN PLACE, HAND TIGHTEN EACH OF THE (4) SET BOLTS EQUALLY AND ALTERNATIVELY MAKING SURE THAT THE POINTED END OF EACH SET BOLT IS ENGAGED INTO THE STEEL DECKING GROOVE. ONCE EACH OF THE (4) SET BOLTS ARE HAND TIGHT AND PROPER PLACEMENT OF THE NDH4S-W3 HAS BEEN CHECKED, CONTINUE TIGHTENING (USING A BOX END WRENCH) EACH OF THE (4) SET BOLTS EQUALLY AND ALTERNATIVELY UNTIL THE HEX HEAD OF EACH SET BOLT BREAKS AWAY. PROPER INSTALLATION REQUIRES THE HEX HEADS OF ALL SET BOLTS TO HAVE BROKEN AWAY. FOR REFERENCE, A MINIMUM OF 10 FT-LBS OF TORQUE IS REQUIRED.

REVIEWED FOR CODE COMPLIANCE
OPM-0043
BY: William Staehlin
DATE: 1/23/2023
CALIFORNIA BUILDING CODE 2022

MASON WEST
1601 E. Miraloma Ave. Placentia, CA 92870
TEL (714) 630 - 0701, www.masonwest.com

Jiefu "Jeff" Zhang, SE
California SE No. S5270

PAGE
M3.30

ATR HANGER ATTACHMENT
TO CONCRETE FILLED METAL DECK
WITH (2) BADGER INDUSTRIES NDH4S-W3 NO-DRILL™ HANGERS

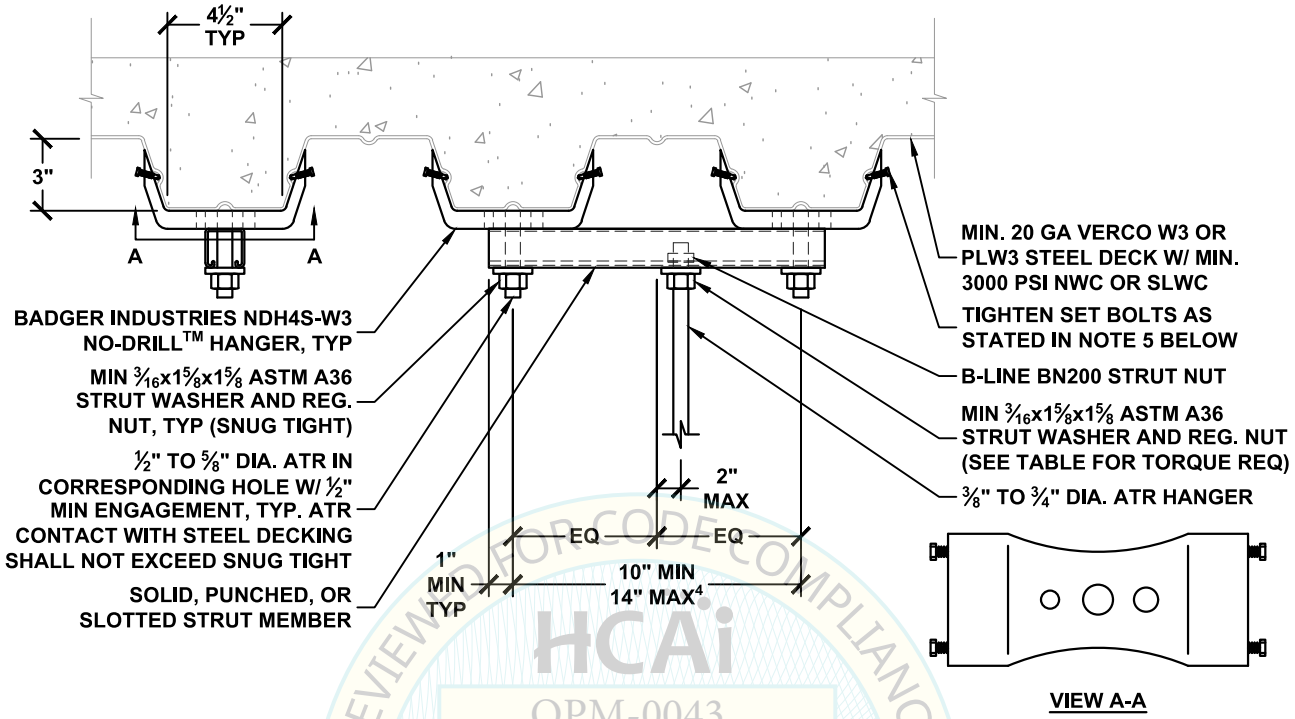

STRUT MEMBER SIZE	GRAVITY ONLY		GRAVITY & SEISMIC		ATR HANGER DIA. INCH	MIN END DIST. Cmin INCH
	HANGER CONNECTION TYPE	ALLOWABLE VERTICAL LOAD LBS	HANGER CONNECTION TYPE	ALLOWABLE VERTICAL LOAD LBS		
13/16"x1⅝"x12GA SINGLE STRUT	38A TO 38E	380	38A TO 38E	380	⅜	6
	50A TO 50E	380	50A TO 50E	380	½	6
	63A TO 63E	380	63A TO 63E	380	⅝	6
1⅝"x1⅝"x12GA SINGLE STRUT	38A TO 38H	730	38A TO 38K	1180	⅜	6
	50A TO 50J	900	50A TO 50K	1180	½	6
	63A TO 63J	900	63A TO 63K	1180	⅝	6
1⅝"x1⅝"x12GA SOLID DOUBLE STRUT	63A TO 63J	900	63A TO 63N	2400	⅝	6
	75A TO 75J	900	75A TO 75N	2400	¾	6

FASTENER WITH STRUT NUT	
DIA. INCH	TORQUE REQ'D FT-LBS
⅜	19
½ - ¾	50

1 SEE DETAIL M0.00 FOR SECTION NOTES

2 WHEN USED FOR "GRAVITY & SEISMIC" LOADING, THE GRAVITY DEMAND SHALL NOT EXCEED THE "GRAVITY ONLY" ALLOWABLE LOAD.

3 PROXIMITY OR SPACING OF NEW OR EXISTING CONCRETE INSERTS OR DRILLED HOLE ANCHORS TO THE NDH DOES NOT IMPACT THE LISTED NDH CAPACITIES.

4 NDH HANGER ASSEMBLY SHALL BE SPACED 10" MIN. FROM ANY ADJACENT NDH HANGERS. REFER TO DETAIL M3.30 FOR SPACING DETAIL.

5 INSTALLATION: ALIGN THE LENGTH OF THE NDH4S-W3 TO BE PERPENDICULAR TO THE LENGTH OF THE STEEL DECKING GROOVES. WHILE HOLDING THE NDH4S-W3 IN PLACE, HAND TIGHTEN EACH OF THE (4) SET BOLTS EQUALLY AND ALTERNATIVELY MAKING SURE THAT THE POINTED END OF EACH SET BOLT IS ENGAGED INTO THE STEEL DECKING GROOVE. ONCE EACH OF THE (4) SET BOLTS ARE HAND TIGHT AND PROPER PLACEMENT OF THE NDH4S-W3 HAS BEEN CHECKED, CONTINUE TIGHTENING (USING A BOX END WRENCH) EACH OF THE (4) SET BOLTS EQUALLY AND ALTERNATIVELY UNTIL THE HEX HEAD OF EACH SET BOLT BREAKS AWAY. PROPER INSTALLATION REQUIRES THE HEX HEADS OF ALL SET BOLTS TO HAVE BROKEN AWAY. FOR REFERENCE, A MINIMUM OF 10 FT-LBS OF TORQUE IS REQUIRED.

HCAi OPM-0043 REVIEWED FOR CODE COMPLIANCE William Staehlin DATE: 01/23/2023 CALIFORNIA BUILDING CODE 2022

MASON WEST
1601 E. Miraloma Ave. Placentia, CA 92870
TEL (714) 630 - 0701, www.masonwest.com

Jiefu "Jeff" Zhang, SE
California SE No. S5270

PAGE
M3.31

ATR HANGER ATTACHMENT
TO CONCRETE FILLED METAL DECK
WITH (2) BADGER INDUSTRIES NDH4S-W3 NO-DRILL™ HANGERS

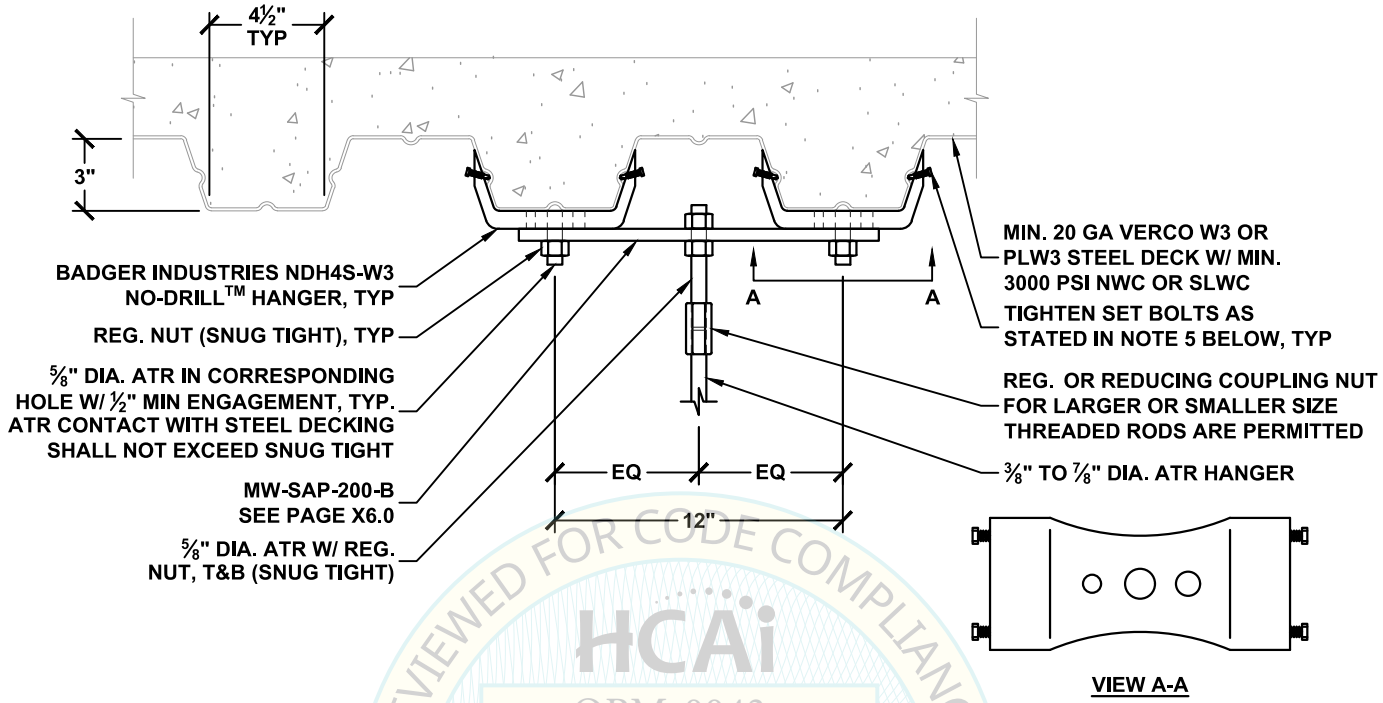

VIEW A-A

GRAVITY ONLY		GRAVITY & SEISMIC		ATR HANGER DIA. INCH	MIN END DIST. Cmin INCH
HANGER CONNECTION TYPE	ALLOWABLE VERTICAL LOAD LBS	HANGER CONNECTION TYPE	ALLOWABLE VERTICAL LOAD LBS		
38A TO 38H	730	38A TO 38M	1930	⅜	6
50A TO 50L	1260	50A TO 50M	1930	½	6
63A TO 63L	1260	63A TO 63M	1930	⅝	6
75A TO 75L	1260	75A TO 75M	1930	¾	6
88A TO 88A	1260	88A TO 88M	1930	⅞	6

1. SEE DETAIL M0.00 FOR SECTION NOTES
2. WHEN USED FOR "GRAVITY & SEISMIC" LOADING, THE GRAVITY DEMAND SHALL NOT EXCEED THE "GRAVITY ONLY" ALLOWABLE LOAD.
3. PROXIMITY OR SPACING OF NEW OR EXISTING CONCRETE INSERTS OR DRILLED HOLE ANCHORS TO THE NDH DOES NOT IMPACT THE LISTED NDH CAPACITIES.
4. NDH HANGER ASSEMBLY SHALL BE SPACED 10" MIN. FROM ANY ADJACENT NDH HANGERS. REFER TO DETAIL M3.30 FOR SPACING DETAIL.
5. INSTALLATION: ALIGN THE LENGTH OF THE NDH4S-W3 TO BE PERPENDICULAR TO THE LENGTH OF THE STEEL DECKING GROOVES. WHILE HOLDING THE NDH4S-W3 IN PLACE, HAND TIGHTEN EACH OF THE (4) SET BOLTS EQUALLY AND ALTERNATIVELY MAKING SURE THAT THE POINTED END OF EACH SET BOLT IS ENGAGED INTO THE STEEL DECKING GROOVE. ONCE EACH OF THE (4) SET BOLTS ARE HAND TIGHT AND PROPER PLACEMENT OF THE NDH4S-W3 HAS BEEN CHECKED, CONTINUE TIGHTENING (USING A BOX END WRENCH) EACH OF THE (4) SET BOLTS EQUALLY AND ALTERNATIVELY UNTIL THE HEX HEAD OF EACH SET BOLT BREAKS AWAY. PROPER INSTALLATION REQUIRES THE HEX HEADS OF ALL SET BOLTS TO HAVE BROKEN AWAY. FOR REFERENCE, A MINIMUM OF 10 FT-LBS OF TORQUE IS REQUIRED.

REVIEWED FOR CODE COMPLIANCE
HCAi
OPM-0043
William Staehlin
DATE: 01/23/2023
CALIFORNIA BUILDING CODE (CBC)

MASON WEST
1601 E. Miraloma Ave. Placentia, CA 92870
TEL (714) 630 - 0701, www.masonwest.com

Jiefu "Jeff" Zhang, SE
California SE No. S5270

PAGE
M3.32

ATR HANGER ATTACHMENT
TO CONCRETE FILLED METAL DECK
WITH (4) BADGER INDUSTRIES NDH4S-W3 NO-DRILL™ HANGERS

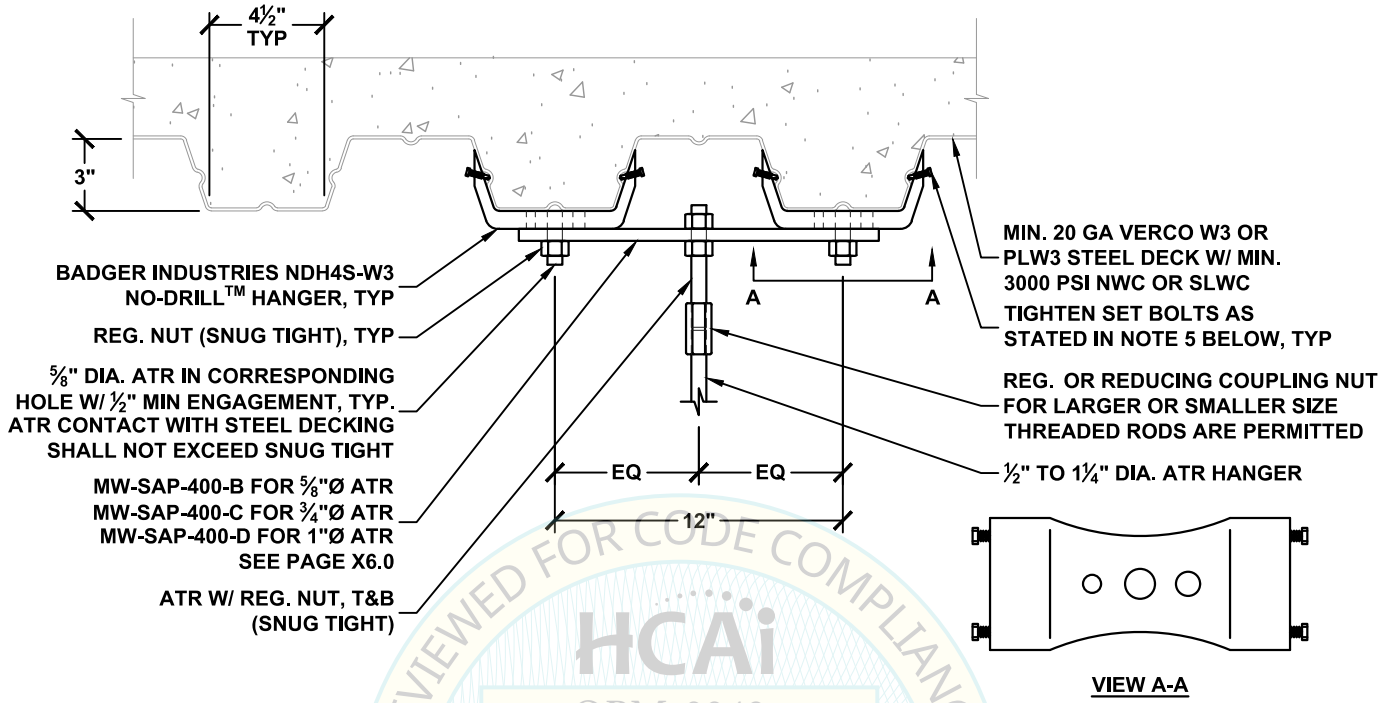

GRAVITY ONLY		GRAVITY & SEISMIC			
HANGER CONNECTION TYPE	ALLOWABLE VERTICAL LOAD LBS	HANGER CONNECTION TYPE	ALLOWABLE VERTICAL LOAD LBS	ATR HANGER DIA. INCH	MIN END DIST. Cmin INCH
50A TO 50L	1350	50A TO 50Q	3600	½	6
63A TO 63N	2160	63A TO 63Q	3600	⅝	6
75A TO 75P	2520	75A TO 75Q	3500	¾	6
88A TO 88P	2520	88A TO 88Q	3500	⅞	6
100A TO 100P	2520	100A TO 100Q	3500	1	6
125A TO 125P	2520	125A TO 125Q	3500	1¼	6

1 SEE DETAIL M0.00 FOR SECTION NOTES
2 WHEN USED FOR "GRAVITY & SEISMIC" LOADING, THE GRAVITY DEMAND SHALL NOT EXCEED THE "GRAVITY ONLY" ALLOWABLE LOAD.
3 PROXIMITY OR SPACING OF NEW OR EXISTING CONCRETE INSERTS OR DRILLED HOLE ANCHORS TO THE NDH DOES NOT IMPACT THE LISTED NDH CAPACITIES.
4 NDH HANGER ASSEMBLY SHALL BE SPACED 10" MIN. FROM ANY ADJACENT NDH HANGERS. REFER TO DETAIL M3.30 FOR SPACING DETAIL.
5 INSTALLATION: ALIGN THE LENGTH OF THE NDH4S-W3 TO BE PERPENDICULAR TO THE LENGTH OF THE STEEL DECKING GROOVES. WHILE HOLDING THE NDH4S-W3 IN PLACE, HAND TIGHTEN EACH OF THE (4) SET BOLTS EQUALLY AND ALTERNATIVELY MAKING SURE THAT THE POINTED END OF EACH SET BOLT IS ENGAGED INTO THE STEEL DECKING GROOVE. ONCE EACH OF THE (4) SET BOLTS ARE HAND TIGHT AND PROPER PLACEMENT OF THE NDH4S-W3 HAS BEEN CHECKED, CONTINUE TIGHTENING (USING A BOX END WRENCH) EACH OF THE (4) SET BOLTS EQUALLY AND ALTERNATIVELY UNTIL THE HEX HEAD OF EACH SET BOLT BREAKS AWAY. PROPER INSTALLATION REQUIRES THE HEX HEADS OF ALL SET BOLTS TO HAVE BROKEN AWAY. FOR REFERENCE, A MINIMUM OF 10 FT-LBS OF TORQUE IS REQUIRED.

REVIEWED FOR CODE COMPLIANCE
HCAi
OPM-0043
By: William Staehlin
DATE: 01/23/2023
CALIFORNIA BUILDING CODE, 2022

MASON WEST
1601 E. Miraloma Ave. Placentia, CA 92870
TEL (714) 630 - 0701, www.masonwest.com

Jiefu "Jeff" Zhang, SE
California SE No. S5270

PAGE
M3.33

HANGER ATTACHMENT TO WOOD JOIST

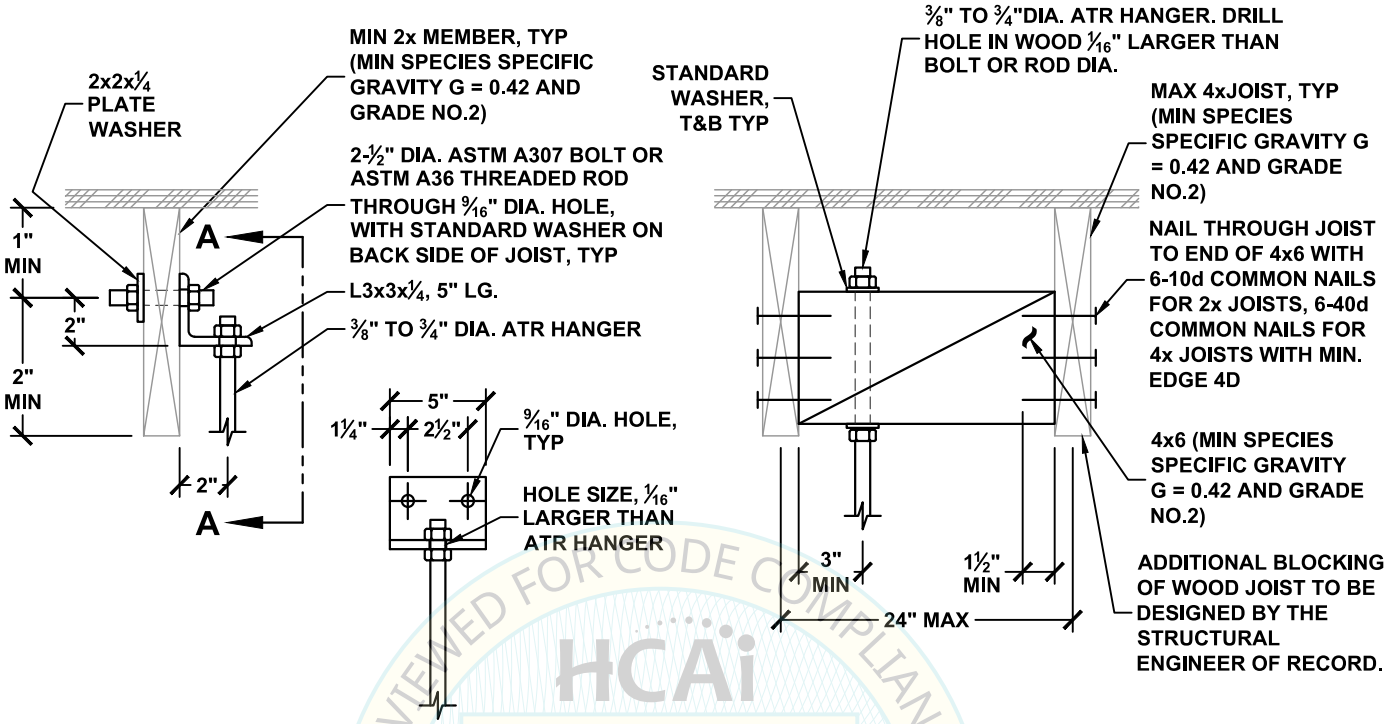

VIEW A-A

AT JOIST **IN-BETWEEN JOISTS**

HANGER ATTACHMENT TYPE	ALLOWABLE VERTICAL LOAD LBS	ATR HANGER DIA. INCH
38A TO 38E	420	⅜
50A TO 50E	420	½
63A TO 63E	420	⅝
75A TO 75E	420	¾

SEE DETAIL M0.00 FOR SECTION NOTES

REVIEWED FOR CODE COMPLIANCE
HCAi
OPM-0043
BY: William Staehlin
DATE: 01/23/2023
CALIFORNIA BUILDING CODE, 2022

MASON WEST
1601 E. Miraloma Ave. Placentia, CA 92870
TEL (714) 630 - 0701, www.masonwest.com

Jiefu "Jeff" Zhang, SE
California SE No. S5270

PAGE
M4.10

HANGER ATTACHMENT TO WOOD I-JOISTS

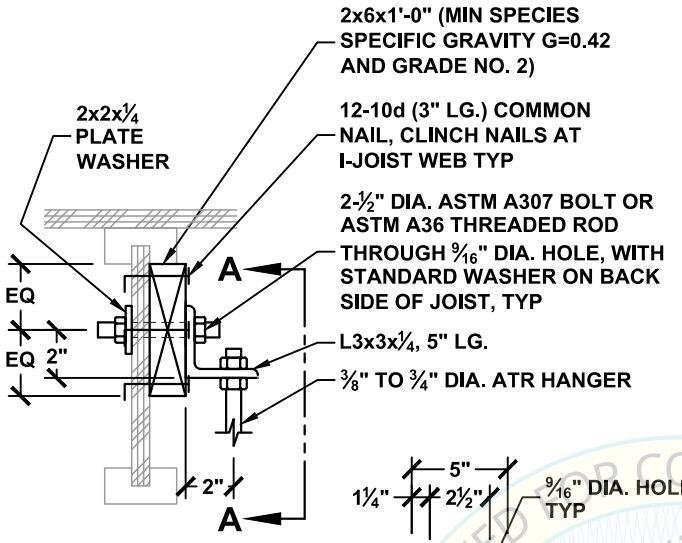

AT JOIST

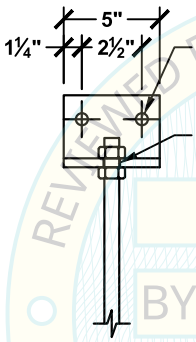

VIEW A-A

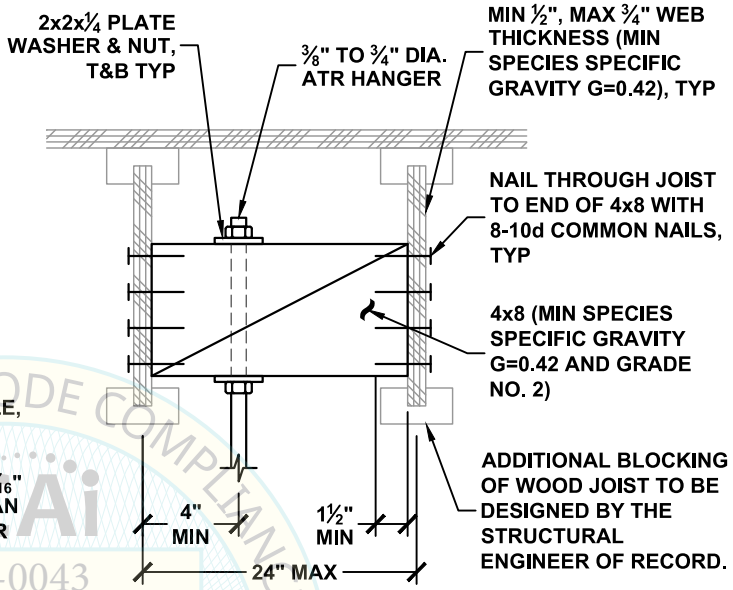

IN-BETWEEN JOISTS

HANGER ATTACHMENT TYPE	ALLOWABLE VERTICAL LOAD LBS	ATR HANGER DIA. INCH
38A TO 38E	360	⅜
50A TO 50E	360	½
63A TO 63E	360	⅝
75A TO 75E	360	¾

SEE DETAIL M0.00 FOR SECTION NOTES

REVIEWED FOR CODE COMPLIANCE
CALIFORNIA BUILDING CODE, 2022
Ai
OPM-0043
BY: William Staehlin
DATE: 01/23/2023

MASON WEST
1601 E. Miraloma Ave. Placentia, CA 92870
TEL (714) 630 - 0701, www.masonwest.com

Jiefu "Jeff" Zhang, SE
California SE No. S5270

PAGE
M4.11

HANGER ATTACHMENT TO WOOD I-JOISTS

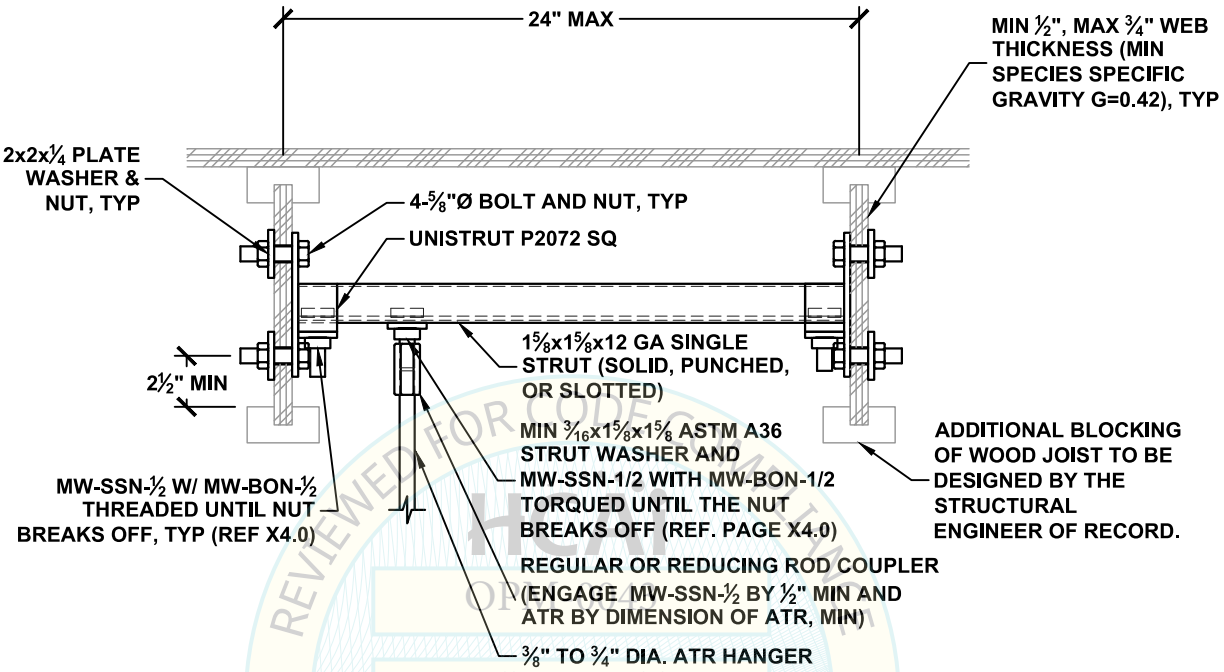

REVIEWED FOR CODE COMPLIANCE
OPM-0043
BY: William Staehlin
DATE: 01/23/2023
CALIFORNIA BUILDING CODE, 2022

HANGER ATTACHMENT TYPE	ALLOWABLE VERTICAL LOAD LBS	ATR HANGER DIA. INCH
38A TO 38H	710	⅜
50A TO 50H	710	½
63A TO 63H	710	⅝
75A TO 75H	710	¾

SEE DETAIL M0.00 FOR SECTION NOTES

MASON WEST
1601 E. Miraloma Ave. Placentia, CA 92870
TEL (714) 630 - 0701, www.masonwest.com

Jiefu "Jeff" Zhang, SE
California SE No. S5270

PAGE
M4.12

HANGER ATTACHMENT
TO FULLY GROUTED CMU WALL
WITH HILTI KB-TZ2 CARBON STEEL CONCRETE ANCHOR

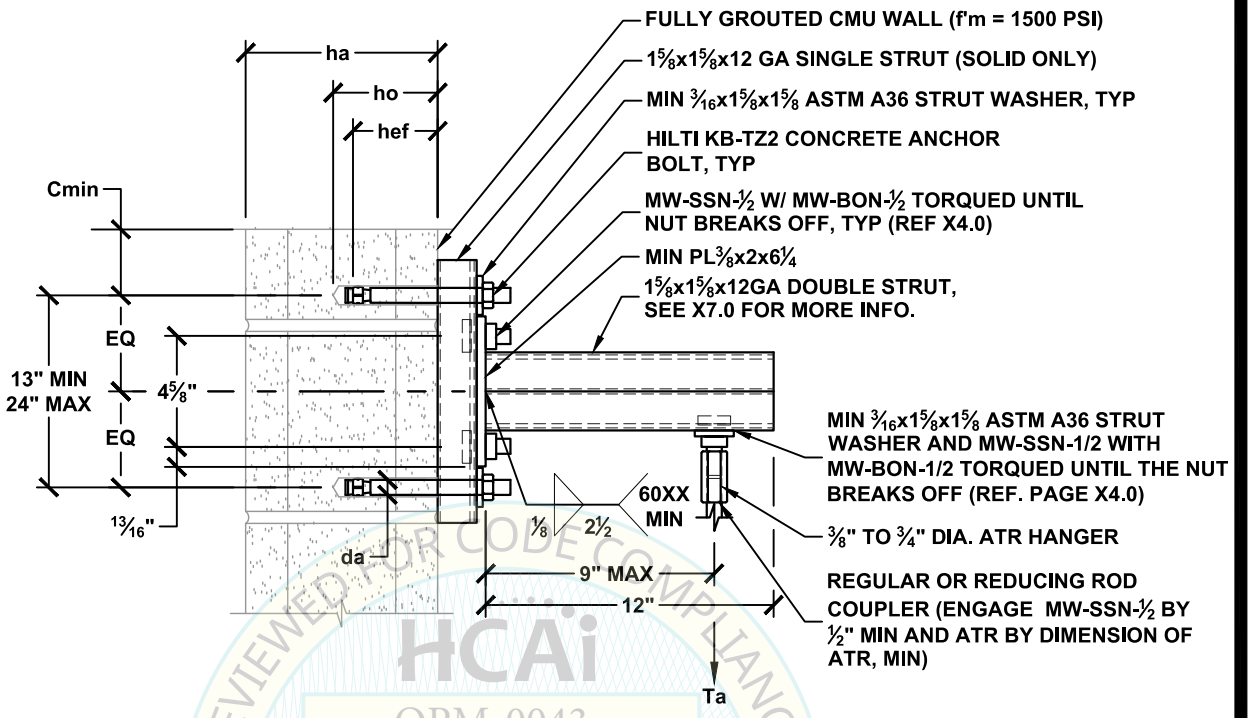

HCAi
OPM-0043
REVIEWED FOR CODE COMPLIANCE
BY: William Staehlin
DATE: 01/23/2023
CALIFORNIA BUILDING CODE

NOTE:

WHEN USING HILTI KB-TZ2 CONCRETE ANCHOR ATTACHMENT TO CMU WALL, THE STRUCTURAL ENGINEER OF RECORD (SEOR) SHALL VERIFY:

(1) MASONRY IS NOT CRACKED AS DEFINED IN ICC-ES AC01 SECTION 2.3; CALCULATION REQUIRED TO SHOW MASONRY WALL WOULD NOT CRACK UNDER THE DESIGN EARTHQUAKE LOADS UNDER ALL SERVICE LOAD CONDITIONS; WALL HAS TO REMAIN ELASTIC.

(2) MASONRY WALL SHALL BE FULLY GROUTED IN ACCORDANCE WITH ESR-4561 SECTION 3.2.

(3) CONDITION OF USE REQUIREMENTS IN ACCORDANCE WITH ESR-4561 SECTION 5.0 IS SATISFIED.

HANGER ATTACHMENT TYPE	STEEL COMPONENT ALLOWABLE VERTICAL LOAD Ta LBS	HANGER ATTACHMENT TYPE	CONCRETE ANCHOR ALLOWABLE VERTICAL LOAD Tac [3] LBS	ATR HANGER DIA. INCH	HILTI KB-TZ2 CONCRETE ANCHOR (ICC ESR-4561) SPECIAL INSPECTION REQ'D						
					DIA. da INCH	MIN EFF. EMBED. hef INCH	MIN HOLE DEPTH ho INCH	MIN BASE TH. ha INCH	MIN EDGE Cmin INCH	MIN SPACING Smin INCH	TORQUE REQ'D FT-LBS
38A TO 38E	370	38A TO 38H	840	⅜	½	3¼	4¼	8	12	13	25
50A TO 50E	370	50A TO 50H	840	½							
63A TO 63E	370	63A TO 63H	840	⅝							
75A TO 75E	370	75A TO 75H	840	¾							

[1] SEE M0.00 FOR SECTION NOTES

[2] HILTI KB-TZ2 MASONRY ANCHOR MUST BE INSTALLED IN THE FACE OF CMU SHELLS A MINIMUM OF 1⅜" FROM ANY VERTICAL MORTAR JOINT.

[3] ALLOWABLE LOADS HAVE BEEN INCREASED BY A FACTOR OF 1.2 FOR LOAD COMBINATIONS INCLUDING OVERSTRENGTH, Ω_0, PER ASCE 7-10 SEC. 12.4.3.3 OR ASCE 7-16 SEC. 2.4.5.

MASON WEST
1601 E. Miraloma Ave. Placentia, CA 92870
TEL (714) 630 - 0701, www.masonwest.com

Jiefu "Jeff" Zhang, SE
California SE No. S5270

PAGE
M5.20

ANGLE CLIP ATTACHMENT
TO FULLY GROUTED CMU WALL
WITH HILTI KB-TZ2 CARBON STEEL CONCRETE ANCHOR

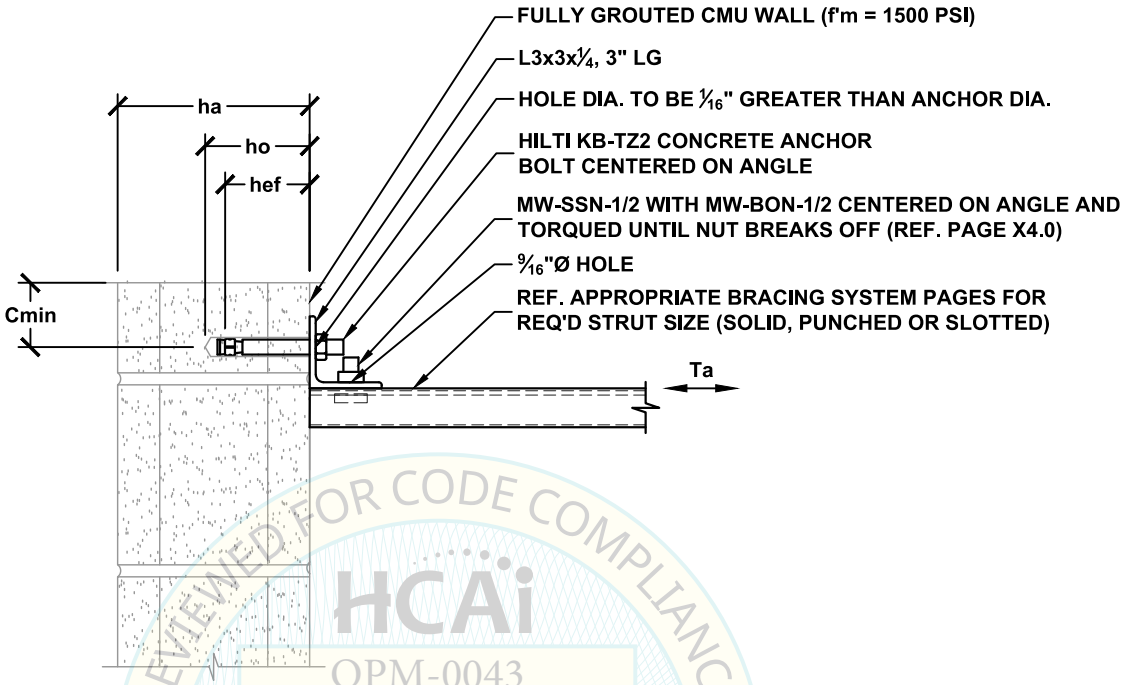

REVIEWED FOR CODE COMPLIANCE
HCAi
OPM-0043
BY: William Staehlin
DATE: 01/23/2023
CALIFORNIA BUILDING CODE 2022

NOTE:

WHEN USING HILTI KB-TZ2 CONCRETE ANCHOR ATTACHMENT TO CMU WALL, THE STRUCTURAL ENGINEER OF RECORD (SEOR) SHALL VERIFY:

(1) MASONRY IS NOT CRACKED AS DEFINED IN ICC-ES AC01 SECTION 2.3; CALCULATION REQUIRED TO SHOW MASONRY WALL WOULD NOT CRACK UNDER THE DESIGN EARTHQUAKE LOADS UNDER ALL SERVICE LOAD CONDITIONS; WALL HAS TO REMAIN ELASTIC.

(2) MASONRY WALL SHALL BE FULLY GROUTED IN ACCORDANCE WITH ESR-4561 SECTION 3.2.

(3) CONDITION OF USE REQUIREMENTS IN ACCORDANCE WITH ESR-4561 SECTION 5.0 IS SATISFIED.

HANGER ATTACHMENT TYPE	STEEL COMPONENT ALLOWABLE TENSION LOAD Ta LBS	HANGER ATTACHMENT TYPE	CONCRETE ANCHOR ALLOWABLE TENSION LOAD Tac [3] LBS	HILTI KB-TZ2 CONCRETE ANCHOR (ICC ESR-4561) SPECIAL INSPECTION REQ'D						
				DIA. da INCH	MIN EFF. EMBED. hef INCH	MIN HOLE DEPTH ho INCH	MIN BASE TH. ha INCH	MIN EDGE Cmin INCH	MIN SPACING Smin INCH	TORQUE REQ'D FT-LBS
50A TO 50G	670	50A TO 50H	770	½	3¼	4¼	8	12	13	25

[1] SEE M0.00 FOR SECTION NOTES

[2] HILTI KB-TZ2 MASONRY ANCHOR MUST BE INSTALLED IN THE FACE OF CMU SHELLS A MINIMUM OF 1⅜" FROM ANY VERTICAL MORTAR JOINT.

[3] ALLOWABLE LOADS HAVE BEEN INCREASED BY A FACTOR OF 1.2 FOR LOAD COMBINATIONS INCLUDING OVERSTRENGTH, Ω_0, PER ASCE 7-10 SEC. 12.4.3.3 OR ASCE 7-16 SEC. 2.4.5.

[4] ATTACHMENT PERMITTED FOR AXIAL LOADING ONLY. NO VERTICAL LOADING.

MASON WEST
1601 E. Miraloma Ave. Placentia, CA 92870
TEL (714) 630 - 0701, www.masonwest.com

Jiefu "Jeff" Zhang, SE
California SE No. S5270

ANGLE CLIP ATTACHMENT
TO FULLY GROUTED CMU WALL
WITH HILTI KB-TZ2 CARBON STEEL CONCRETE ANCHOR

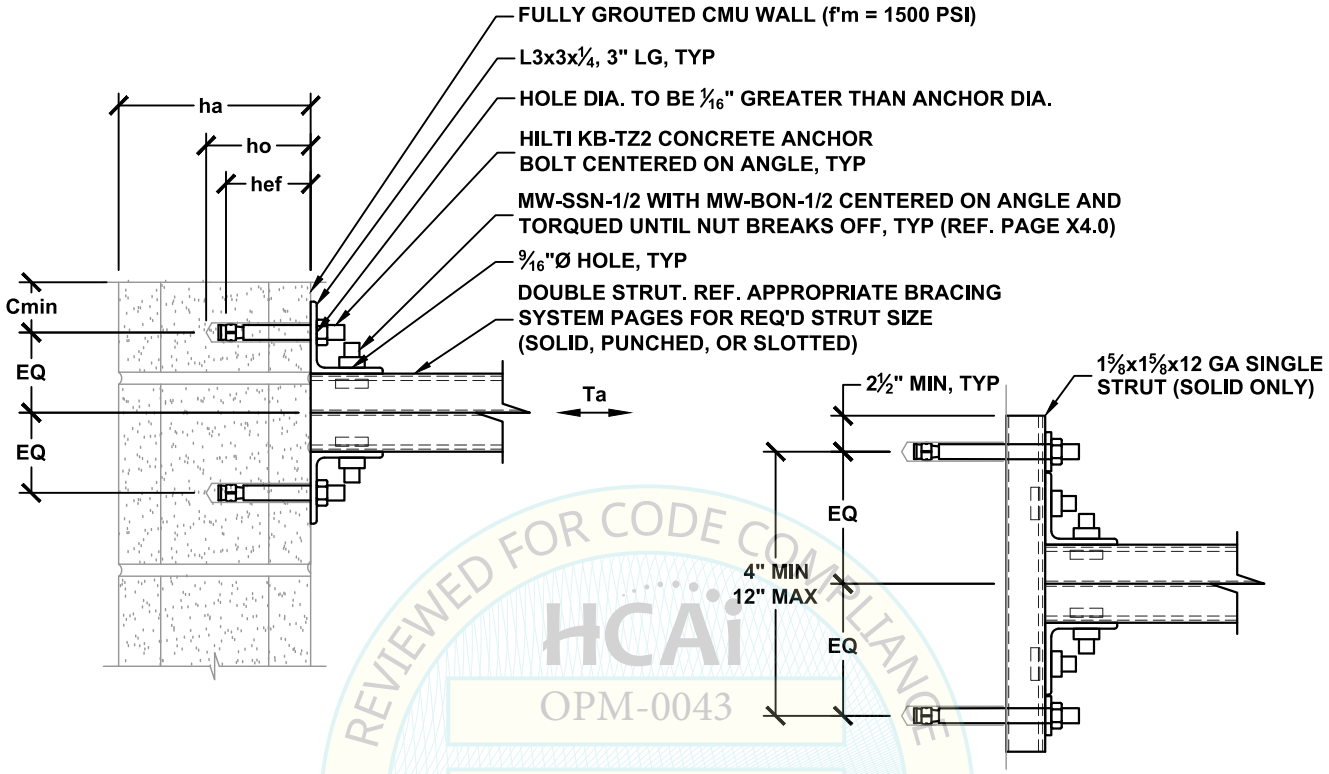

ALTERNATE INSTALL

REVIEWED FOR CODE COMPLIANCE
HCAi
OPM-0043
BY: William Staehlin
DATE: 01/23/2023
CALIFORNIA BUILDING CODE 20

NOTE:

WHEN USING HILTI KB-TZ2 CONCRETE ANCHOR ATTACHMENT TO CMU WALL, THE STRUCTURAL ENGINEER OF RECORD (SEOR) SHALL VERIFY:

(1) MASONRY IS NOT CRACKED AS DEFINED IN ICC-ES AC01 SECTION 2.3; CALCULATION REQUIRED TO SHOW MASONRY WALL WOULD NOT CRACK UNDER THE DESIGN EARTHQUAKE LOADS UNDER ALL SERVICE LOAD CONDITIONS; WALL HAS TO REMAIN ELASTIC.

(2) MASONRY WALL SHALL BE FULLY GROUTED IN ACCORDANCE WITH ESR-4561 SECTION 3.2.

(3) CONDITION OF USE REQUIREMENTS IN ACCORDANCE WITH ESR-4561 SECTION 5.0 IS SATISFIED.

HANGER ATTACHMENT TYPE	STEEL COMPONENT ALLOWABLE TENSION LOAD Ta LBS	HANGER ATTACHMENT TYPE	CONCRETE ANCHOR ALLOWABLE TENSION LOAD Tac [3] LBS	HILTI KB-TZ2 CONCRETE ANCHOR (ICC ESR-4561) SPECIAL INSPECTION REQ'D						
				DIA. da INCH	MIN EFF. EMBED. hef INCH	MIN HOLE DEPTH ho INCH	MIN BASE TH. ha INCH	MIN EDGE Cmin INCH	MIN SPACING Smin INCH	TORQUE REQ'D FT-LBS
50A TO 50L	1350	50A TO 50K	1200	½	3¼	4¼	8	12	4	25

[1] SEE M0.00 FOR SECTION NOTES

[2] HILTI KB-TZ2 MASONRY ANCHOR MUST BE INSTALLED IN THE FACE OF CMU SHELLS A MINIMUM OF 1⅜" FROM ANY VERTICAL MORTAR JOINT.

[3] ALLOWABLE LOADS HAVE BEEN INCREASED BY A FACTOR OF 1.2 FOR LOAD COMBINATIONS INCLUDING OVERSTRENGTH, Ω_0, PER ASCE 7-10 SEC. 12.4.3.3 OR ASCE 7-16 SEC. 2.4.5.

[4] ATTACHMENT PERMITTED FOR AXIAL LOADING ONLY. NO VERTICAL LOADING.

MASON WEST
1601 E. Miraloma Ave. Placentia, CA 92870
TEL (714) 630 - 0701, www.masonwest.com

Jiefu "Jeff" Zhang, SE
California SE No. S5270

HANGER ATTACHMENT
TO FULL HEIGHT METAL STUD WALL

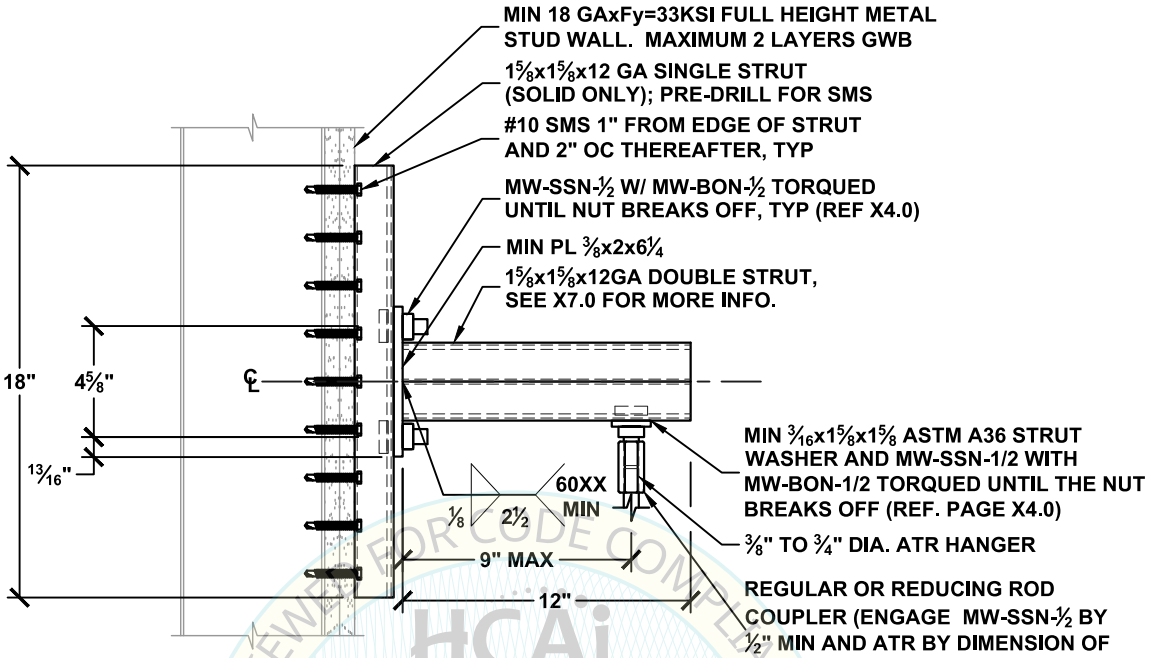

HCAi
OPM-0043
BY: William Staehlin
DATE: 1/23/2023
REVIEWED FOR CODE COMPLIANCE
CALIFORNIA BUILDING CODE, 2022

HANGER ATTACHMENT TYPE	ALLOWABLE VERTICAL LOAD LBS	ATR HANGER DIA. INCH
38A TO 38C	200	⅜
50A TO 50C	200	½
63A TO 63C	200	⅝
75A TO 75C	200	¾

SEE DETAIL M0.00 FOR SECTION NOTES

MASON WEST
1601 E. Miraloma Ave. Placentia, CA 92870
TEL (714) 630 - 0701, www.masonwest.com

Jiefu "Jeff" Zhang, SE
California SE No. S5270

PAGE
M6.10

ANGLE CLIP ATTACHMENT
TO FULL HEIGHT METAL STUD WALL

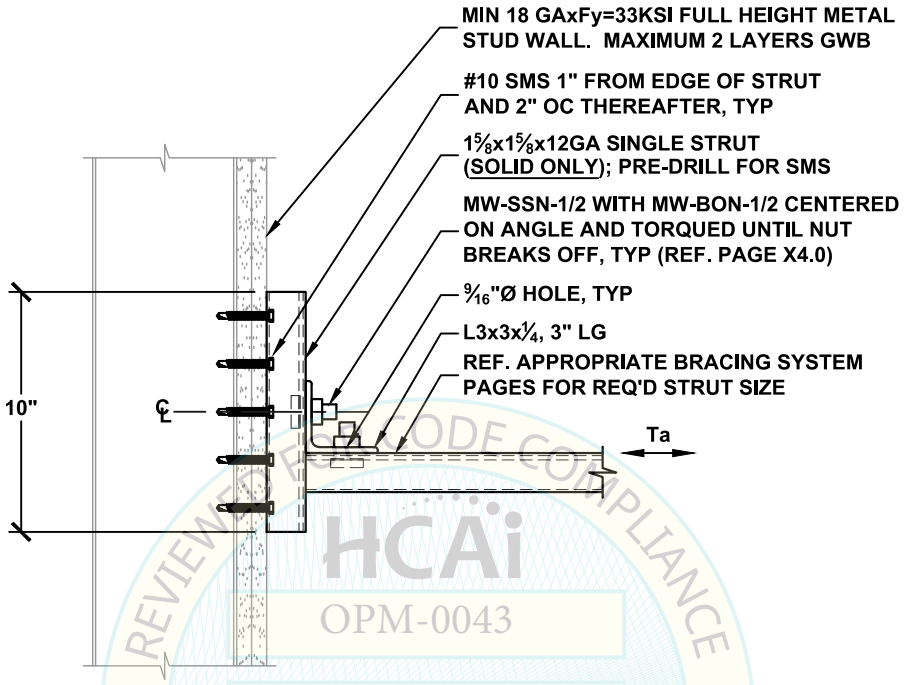

REVIEWED FOR CODE COMPLIANCE
CALIFORNIA BUILDING CODE, 2022
HCAi
OPM-0043
BY: William Staehlin
DATE: 01/23/2023

HANGER ATTACHMENT TYPE	ALLOWABLE TENSION LOAD LBS
50A TO 50G	580

SEE DETAIL M0.00 FOR SECTION NOTES

MASON WEST
1601 E. Miraloma Ave. Placentia, CA 92870
TEL (714) 630 - 0701, www.masonwest.com

Jiefu "Jeff" Zhang, SE
California SE No. S5270

PAGE
M6.11

HANGER ATTACHMENT
TO NON-CONCRETE FILLED METAL DECK

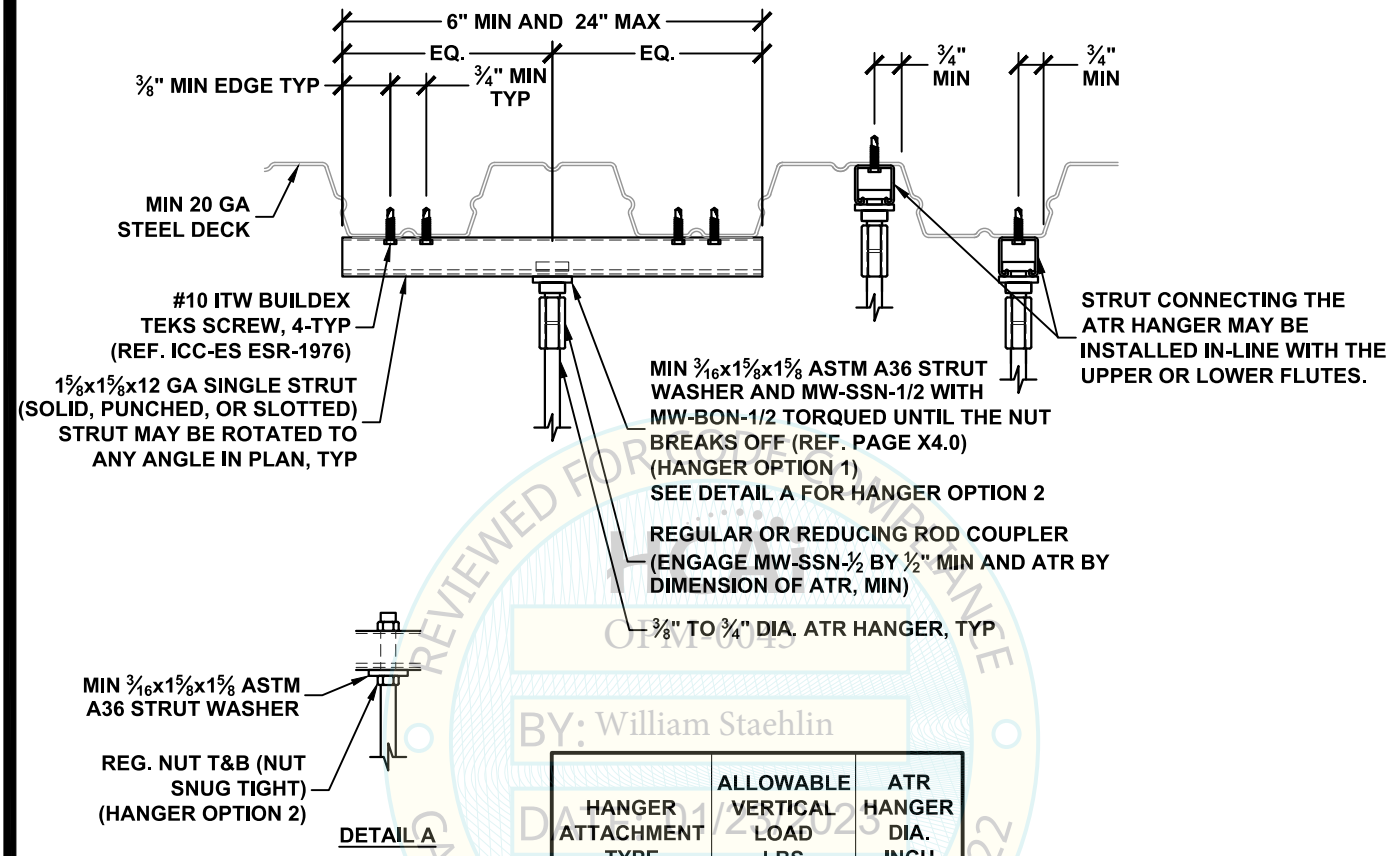

HANGER ATTACHMENT TYPE	ALLOWABLE VERTICAL LOAD LBS	ATR HANGER DIA. INCH
38A TO 38E	350	⅜
50A TO 50E	350	½
63A TO 63E	350	⅝
75A TO 75E	350	¾

1 - SEE DETAIL M0.00 FOR SECTION NOTES
2 - THE DISTANCE FROM THE CENTER OF ANY SHEET METAL SCREW TO ANY STEEL EDGE SHALL BE ⅜" MIN, INCLUDING PUNCHED AND SLOTTED HOLE EDGES.

REVIEWED FOR CODE COMPLIANCE
OPM-0043
BY: William Staehlin
DATE: 1/23/2023
CALIFORNIA BUILDING CODE 2022

MASON WEST
1601 E. Miraloma Ave. Placentia, CA 92870
TEL (714) 630 - 0701, www.masonwest.com

Jiefu "Jeff" Zhang, SE
California SE No. S5270

PAGE
M7.10

HANGER ATTACHMENT
TO NON-CONCRETE FILLED METAL DECK

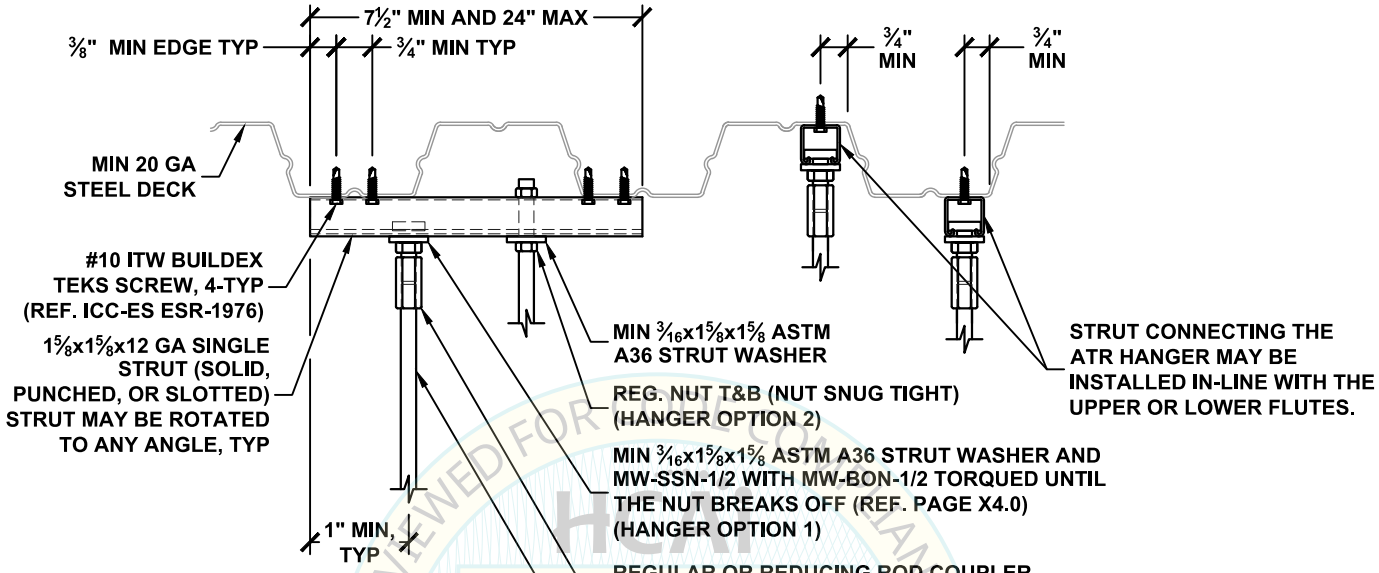

HANGER ATTACHMENT TYPE	ALLOWABLE VERTICAL LOAD LBS	ATR HANGER DIA. INCH
38A TO 38B	170	⅜
50A TO 50B	170	½
63A TO 63B	170	⅝
75A TO 75B	170	¾

1 - SEE DETAIL M0.00 FOR SECTION NOTES
2 - THE DISTANCE FROM THE CENTER OF ANY SHEET METAL SCREW TO ANY STEEL EDGE SHALL BE ⅜" MIN, INCLUDING PUNCHED AND SLOTTED HOLE EDGES.

REVIEWED FOR CODE COMPLIANCE
OPM-0043
BY: William Staehlin
DATE: 01/23/2023
CALIFORNIA BUILDING CODE, 2022

MASON WEST
1601 E. Miraloma Ave. Placentia, CA 92870
TEL (714) 630 - 0701, www.masonwest.com

Jiefu "Jeff" Zhang, SE
California SE No. S5270

PAGE
M7.11

HANGER ATTACHMENT
TO NON-CONCRETE FILLED METAL DECK

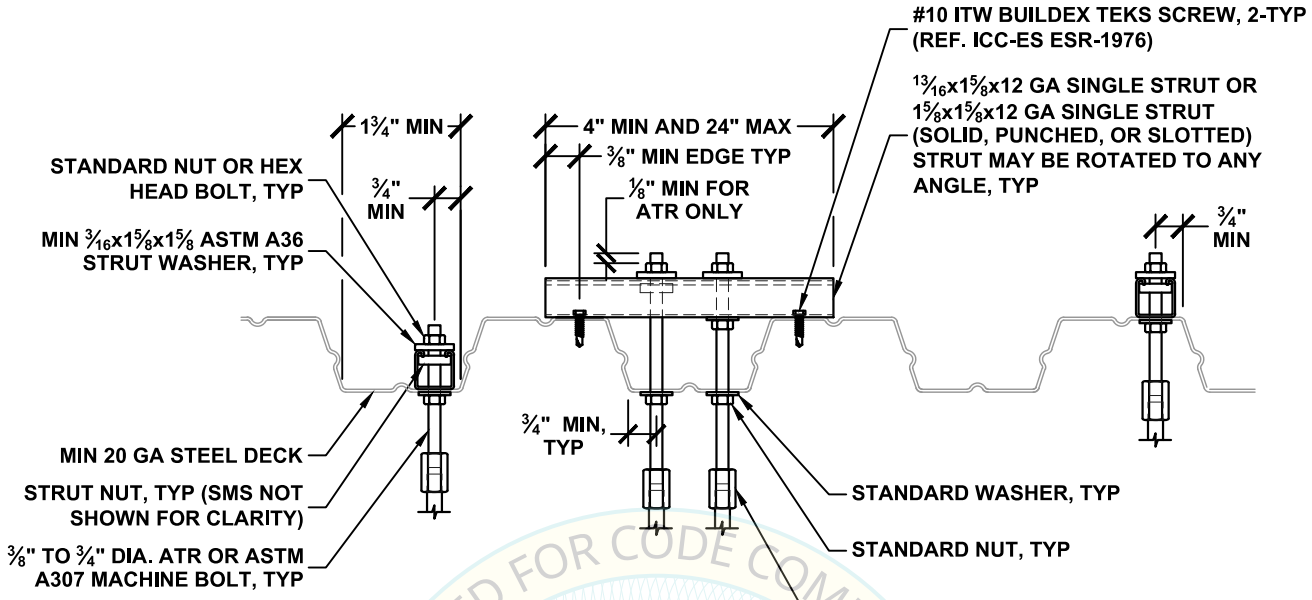

REVIEWED FOR CODE COMPLIANCE
HCAi
OPM-0043
BY: William Staehlin
DATE: 01/23/2023
CALIFORNIA BUILDING CODE 2022

HANGER ATTACHMENT TYPE	ALLOWABLE VERTICAL LOAD LBS	ATR HANGER DIA. INCH
38A TO 38D	250	⅜
50A TO 50D	250	½
63A TO 63D	250	⅝
75A TO 75D	250	¾

FASTENER WITH STRUT NUT	
DIA. INCH	TORQUE REQ'D FT-LBS
⅜	19
½	50
⅝	100
¾	125

1 - CONNECTION OF STANDARD NUTS AND COUPLING NUTS ARE NOT REQUIRED TO BE TORQUED, SNUG TIGHT ONLY.

2 - THE DISTANCE FROM THE CENTER OF ANY SHEET METAL SCREW TO ANY STEEL EDGE SHALL BE ⅜" MIN, INCLUDING PUNCHED AND SLOTTED HOLE EDGES.

MASON WEST
1601 E. Miraloma Ave. Placentia, CA 92870
TEL (714) 630 - 0701, www.masonwest.com

Jiefu "Jeff" Zhang, SE
California SE No. S5270

PAGE
M7.12

HANGER ATTACHMENT
TO NON-CONCRETE FILLED METAL DECK

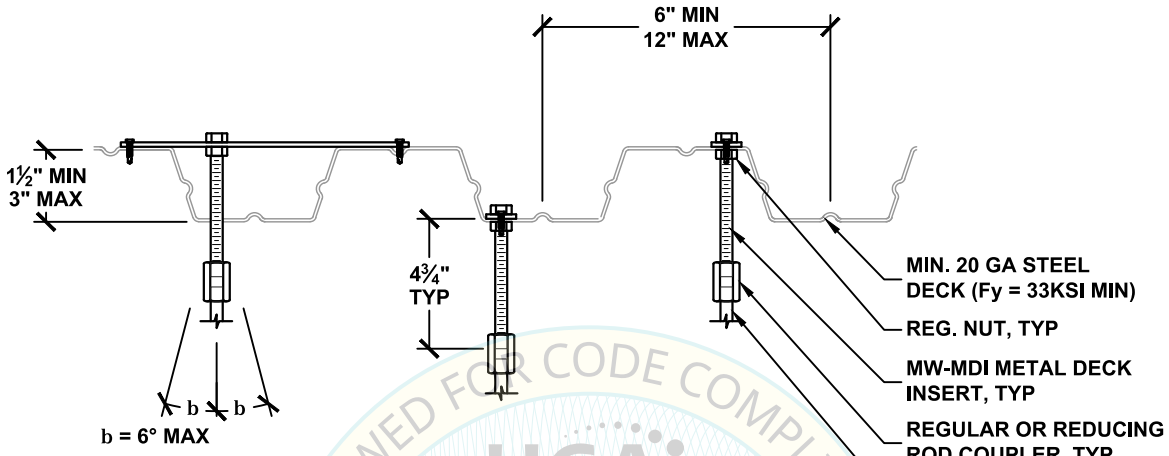

REVIEWED FOR CODE COMPLIANCE
HCAi
OPM-0043
BY: William Staehlin
DATE: 01/23/2023
CALIFORNIA BUILDING CODE 2022

TO DECK			SPANNER PLATE OVER LOWER FLUTE			
HANGER ATTACHMENT TYPE	ALLOWABLE VERTICAL LOAD LBS	ATR HANGER DIA. INCH	HANGER ATTACHMENT TYPE	ALLOWABLE VERTICAL LOAD LBS	ATR HANGER DIA. INCH	INSERT SIZE
38A TO 38D	300	⅜	38A TO 38A	100	⅜	MW-MDI-38
50A TO 50D	300	½	50A TO 50A	100	½	
38A TO 38D	300	⅜	38A TO 38A	100	⅜	MW-MDI-50
50A TO 50D	300	½	50A TO 50A	100	½	
63A TO 63D	300	⅝	63A TO 63A	100	⅝	
50A TO 50D	300	½	50A TO 50A	100	½	MW-MDI-63
63A TO 63D	300	⅝	63A TO 63A	100	⅝	
75A TO 75D	300	¾	75A TO 75A	100	¾	

1 - SEE DETAIL M0.00 FOR SECTION NOTES
2 - MW-MDI INSERT MAY BE INSTALLED ANYWHERE ON THE DECK.
3 - THE 6° ALLOWABLE INSTALLED ANGLE IS PERMITTED FOR ALL INSTALLATIONS.
4 - WHERE SPANNER PLATE OPTION IS USED, THE VERTICAL UPWARD LOAD, IF ANY, SHALL NOT EXCEED 90 LBS.

MASON WEST
1601 E. Miraloma Ave. Placentia, CA 92870
TEL (714) 630 - 0701, www.masonwest.com

Jiefu "Jeff" Zhang, SE
California SE No. S5270

PAGE
M7.13

ANGLE CLIP ATTACHMENT TO CONCRETE SLAB, BEAM OR WALL WITH (1) POWER-STUD+ SD1 CONCRETE ANCHOR

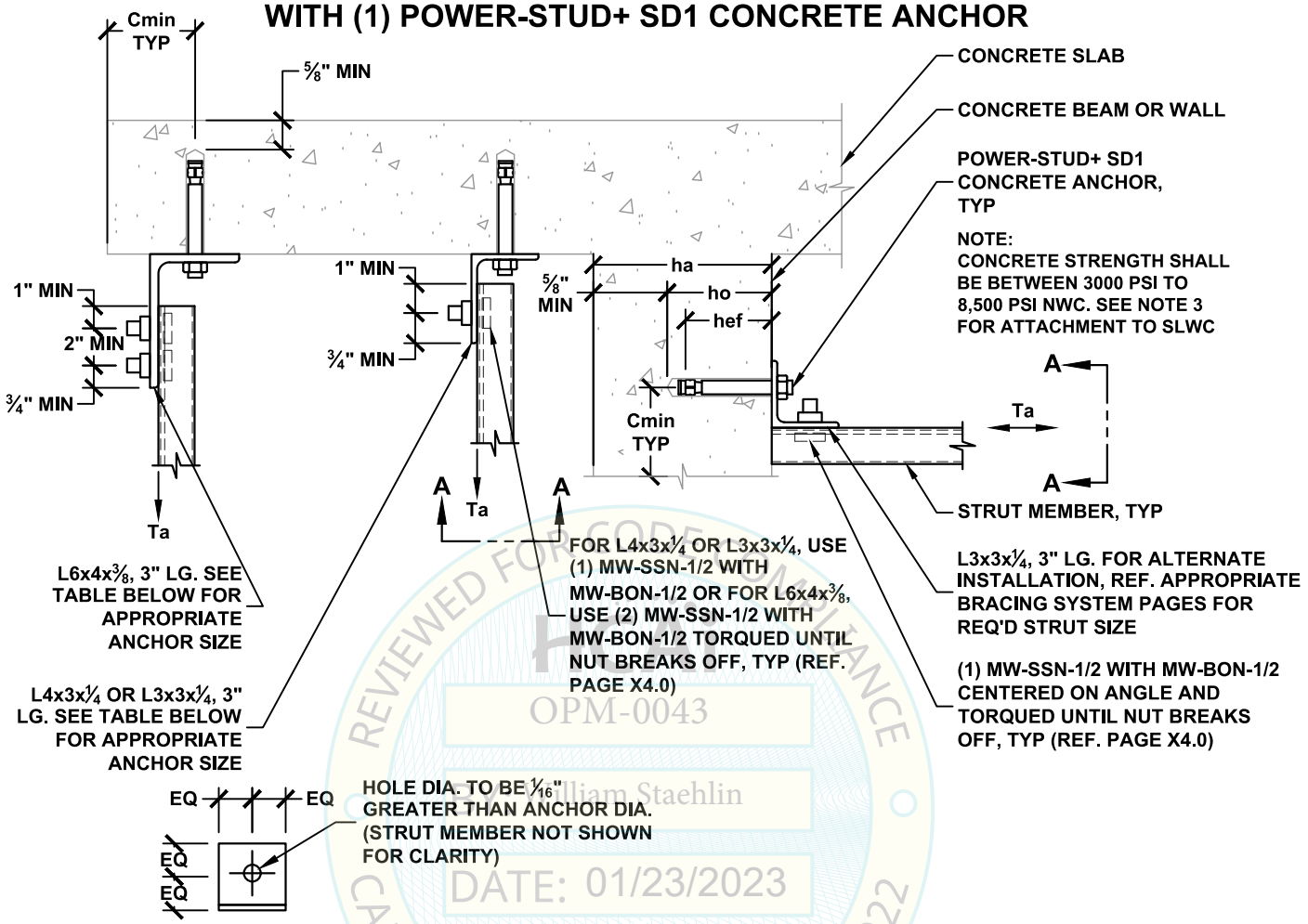

SECTION A-A

HANGER ATTACHMENT TYPE	STEEL COMPONENT ALLOWABLE TENSION LOAD Ta LBS	HANGER ATTACHMENT TYPE	CONCRETE ANCHOR ALLOWABLE TENSION LOAD Tac [1,3] LBS	ANGLE SIZE [2]	POWER-STUD+ SD1 CONCRETE ANCHOR (ICC ESR-2818) SPECIAL INSPECTION REQ'D						
					DIA. da INCH	MIN EFF. EMBED. hef INCH	MIN HOLE DEPTH ho INCH	MIN BASE TH. ha INCH	MIN EDGE Cmin INCH	MIN SPACING Smin INCH	TORQUE REQ'D FT-LBS
38A TO 38G	670	38A TO 38J	910	L3x3x1/4 / L4x3x1/4	3/8	2	2 5/8	4	4 1/2	6	20
50A TO 50K	1140	50A TO 50K	1120	L6x4x3/8	1/2	3 1/4	4	6	4 1/2	9 3/4	40
63A TO 63K	1140	63A TO 63M	1740	L6x4x3/8	5/8	2 3/4	3 3/4	6	6	8 1/4	80

SEE DETAIL M0.00 FOR SECTION NOTES

[1] ALLOWABLE LOADS HAVE BEEN INCREASED BY A FACTOR OF 1.2 FOR LOAD COMBINATIONS INCLUDING OVERSTRENGTH, Ω_0, PER ASCE 7-10 SEC. 12.4.3.3.

[2] ASTM A36, Fy = 36 KSI

[3] FOR SLWC SLAB AND BEAM, REDUCE ALLOWABLE TENSION LOAD BY MULTIPLYING ALLOWABLE LOAD BY A FACTOR OF 0.6.

MASON WEST
1601 E. Miraloma Ave. Placentia, CA 92870
TEL (714) 630 - 0701, www.masonwest.com

Jiefu "Jeff" Zhang, SE
California SE No. S5270

PAGE **M8.30**

REVIEWED FOR CODE COMPLIANCE
OPM-0043
William Staehlin
DATE: 01/23/2023
CALIFORNIA BUILDING CODE, 2022

ANGLE CLIP ATTACHMENT
TO CONCRETE FILLED METAL DECK
WITH (1) POWER-STUD+ SD1 CONCRETE ANCHOR

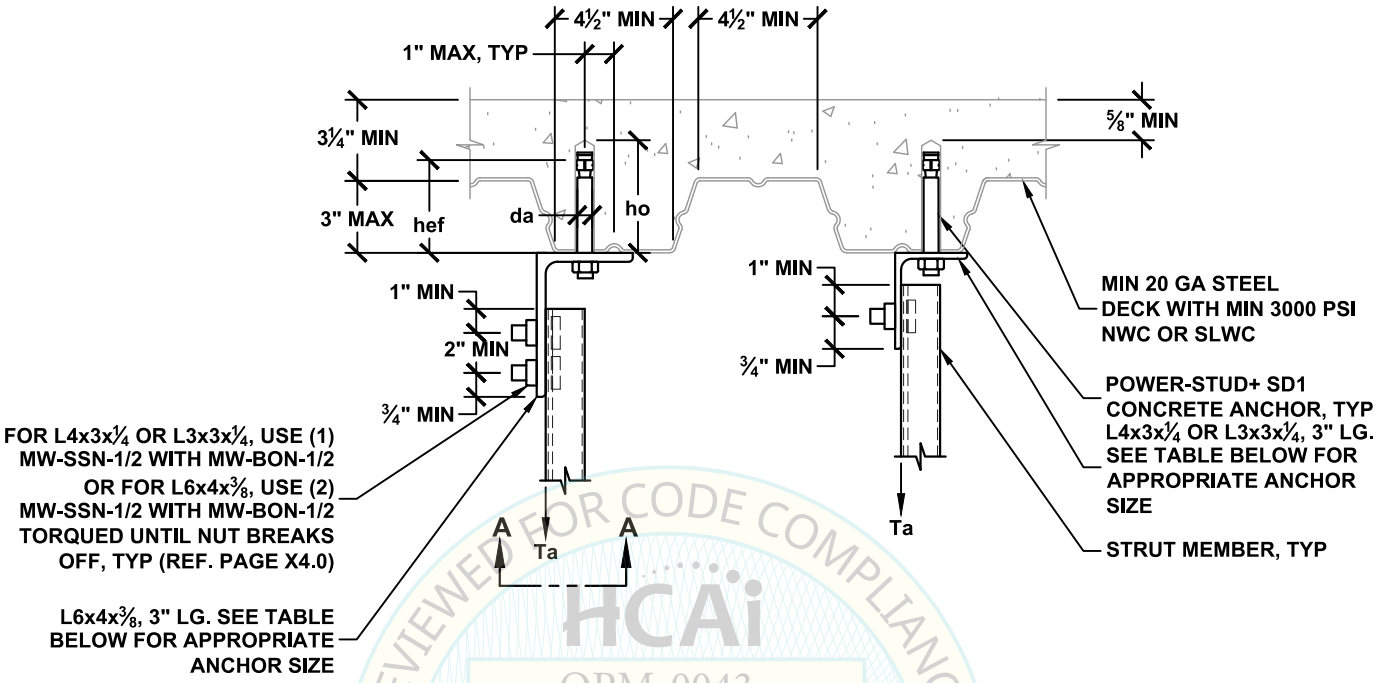

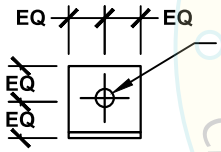

REVIEWED FOR CODE COMPLIANCE
HCAi
OPM-0043
William Staehlin
DATE: 01/23/2023
CALIFORNIA BUILDING CODE, 2022

SECTION A-A

HANGER ATTACHMENT TYPE	STEEL COMPONENT ALLOWABLE VERTICAL LOAD Ta LBS	HANGER ATTACHMENT TYPE	CONCRETE ANCHOR ALLOWABLE VERTICAL LOAD Tac [1] LBS	ANGLE SIZE [2]	POWER-STUD+ SD1 CONCRETE ANCHOR (ICC ESR-2818) SPECIAL INSPECTION REQ'D					
					DIA. da INCH	MIN EFF. EMBED hef INCH	MIN HOLE DEPTH ho INCH	MIN SPACING Smin INCH	MIN END DIST. Cmin INCH	TORQUE REQ'D FT-LBS
38A TO 38G	670	38A TO 38G	560	L3x3x¼ / L4x3x¼	⅜	2	2⅝	6¾	3⅜	20
50A TO 50G	670	50A TO 50G	980	L3x3x¼ / L4x3x¼	½	2	2¾	6¾	3⅜	40
63A TO 63K	1140	63A TO 63K	810	L6x4x⅜	⅝	2¾	3¾	8¼	4⅛	80

SEE DETAIL M0.00 FOR SECTION NOTES

[1] ALLOWABLE LOADS HAVE BEEN INCREASED BY A FACTOR OF 1.2 FOR LOAD COMBINATIONS INCLUDING OVERSTRENGTH, Ω_0, PER ASCE 7-10 SEC. 12.4.3.3.

[2] ASTM A36, Fy = 36 KSI

MASON WEST
1601 E. Miraloma Ave. Placentia, CA 92870
TEL (714) 630 - 0701, www.masonwest.com

Jiefu "Jeff" Zhang, SE
California SE No. S5270

PAGE
M8.31

ANGLE CLIP ATTACHMENT
TO CONCRETE FILLED METAL DECK
WITH (1) POWER-STUD+ SD1 CONCRETE ANCHOR

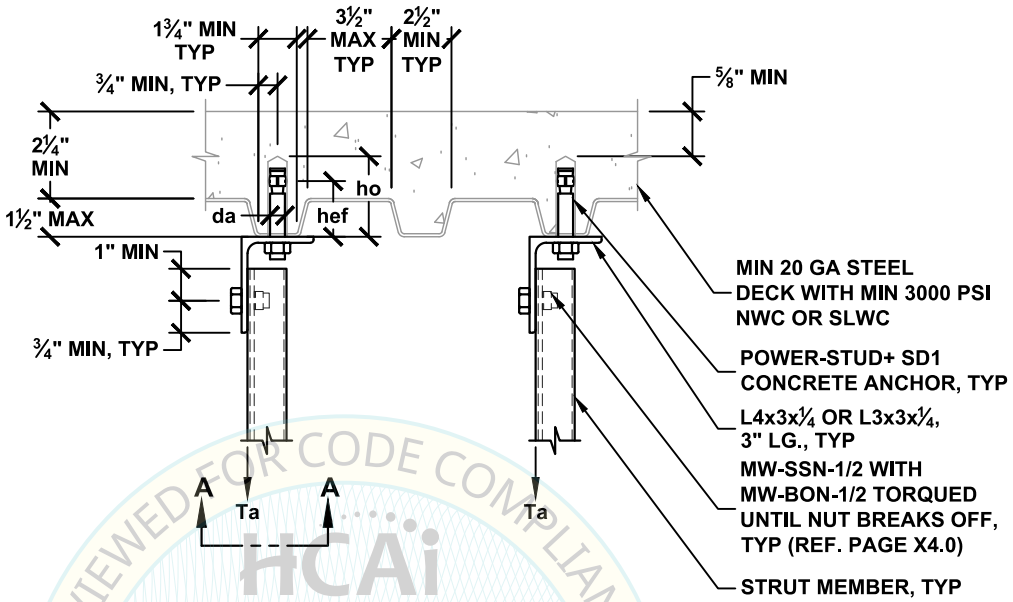

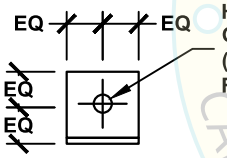

SECTION A-A

HANGER ATTACHMENT TYPE	STEEL COMPONENT ALLOWABLE VERTICAL LOAD Ta LBS	HANGER ATTACHMENT TYPE	CONCRETE ANCHOR ALLOWABLE VERTICAL LOAD Tac [1] LBS	ANGLE SIZE [2]	POWER-STUD+ SD1 CONCRETE ANCHOR (ICC ESR-2818) SPECIAL INSPECTION REQ'D					
					DIA. da INCH	MIN EFF. EMBED hef INCH	MIN HOLE DEPTH ho INCH	MIN SPACING Smin INCH	MIN END DIST. Cmin INCH	TORQUE REQ'D FT-LBS
38A TO 38G	670	38A TO 38F	480	L3x3x¼ / L4x3x¼	⅜	2	2⅝	6	3	20
50A TO 50G	670	50A TO 50G	580	L3x3x¼ / L4x3x¼	½	2	2¾	6	3	40

SEE DETAIL M0.00 FOR SECTION NOTES

[1] ALLOWABLE LOADS HAVE BEEN INCREASED BY A FACTOR OF 1.2 FOR LOAD COMBINATIONS INCLUDING OVERSTRENGTH, Ω_0, PER ASCE 7-10 SEC. 12.4.3.3.

[2] ASTM A36, Fy = 36 KSI

MASON WEST
1601 E. Miraloma Ave. Placentia, CA 92870
TEL (714) 630 - 0701, www.masonwest.com

Jiefu "Jeff" Zhang, SE
California SE No. S5270

PAGE
M8.32

REVIEWED FOR CODE COMPLIANCE
HCAi
OPM-0043
BY: William Staehlin
DATE: 01/23/2023
CALIFORNIA BUILDING CODE, 2022

ANGLE CLIP ATTACHMENT TO CONCRETE SLAB, BEAM OR WALL WITH (1) MASON IND. N.Y. SAS(E) CONCRETE ANCHOR

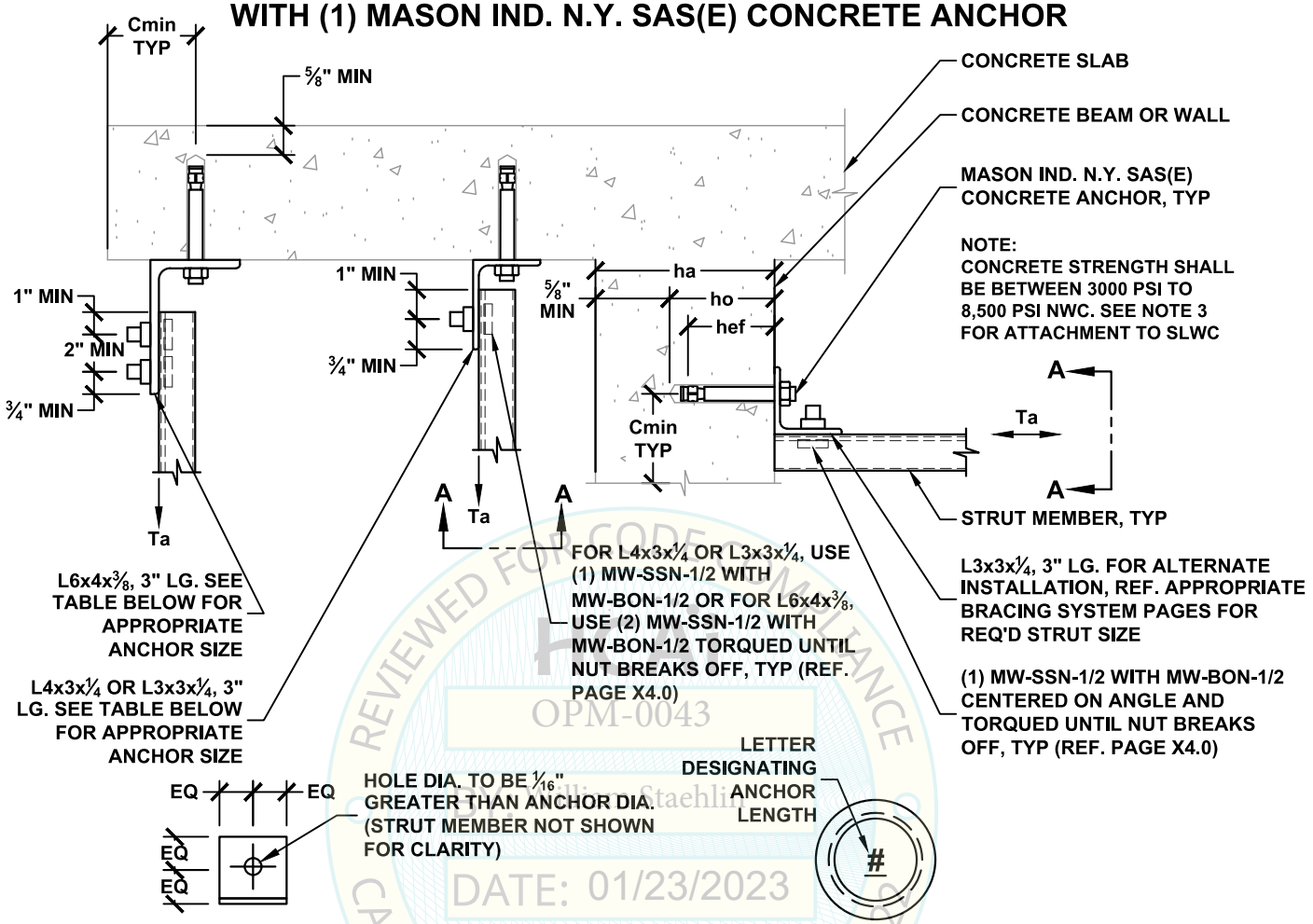

SECTION A-A

SAS(E) IDENTIFICATION

HANGER ATTACHMENT TYPE	STEEL COMPONENT ALLOWABLE TENSION LOAD Ta LBS	HANGER ATTACHMENT TYPE	CONCRETE ANCHOR ALLOWABLE TENSION LOAD Tac [1,3] LBS	ANGLE SIZE [2]	MASON IND. N.Y. SAS(E) CONCRETE ANCHORS (ICC ESR-3037) SPECIAL INSPECTION REQ'D						
					DIA. da INCH	MIN EFF. EMBED. hef INCH	MIN HOLE DEPTH ho INCH	MIN BASE TH. ha INCH	MIN EDGE Cmin INCH	MIN SPACING Smin INCH	TORQUE REQ'D FT-LBS
38A TO 38G	670	38A TO 38K	1240	L3x3x1/4 / L4x3x1/4	3/8	2 1/2	3	4 1/2	6	7 1/2	30
50A TO 50G	670	50A TO 50L	1290	L3x3x1/4 / L4x3x1/4	1/2	2 1/4	3	4 1/2	7	6 3/4	60
50A TO 50K	1140	50A TO 50M	1680	L6x4x3/8	1/2	3 3/8	4 1/8	6	7	10 1/8	60
63A TO 63K	1140	63A TO 63P	3090	L6x4x3/8	5/8	4 1/2	5 3/8	8	7	13 1/2	90

SEE DETAIL M0.00 FOR SECTION NOTES

[1] ALLOWABLE LOADS HAVE BEEN INCREASED BY A FACTOR OF 1.2 FOR LOAD COMBINATIONS INCLUDING OVERSTRENGTH, Ω_0, PER ASCE 7-10 SEC. 12.4.3.3.

[2] ASTM A36, Fy = 36 KSI

[3] FOR SLWC SLAB AND BEAM, REDUCE ALLOWABLE TENSION LOAD BY MULTIPLYING ALLOWABLE LOAD BY A FACTOR OF 0.6.

MASON WEST
1601 E. Miraloma Ave. Placentia, CA 92870
TEL (714) 630 - 0701, www.masonwest.com

Jiefu "Jeff" Zhang, SE
California SE No. S5270

PAGE
M8.40

REVIEWED FOR CODE COMPLIANCE
OPM-0043
DATE: 01/23/2023
CALIFORNIA BUILDING CODE

ANGLE CLIP ATTACHMENT
TO CONCRETE FILLED METAL DECK
WITH (1) MASON IND. N.Y. SAS(E) CONCRETE ANCHOR

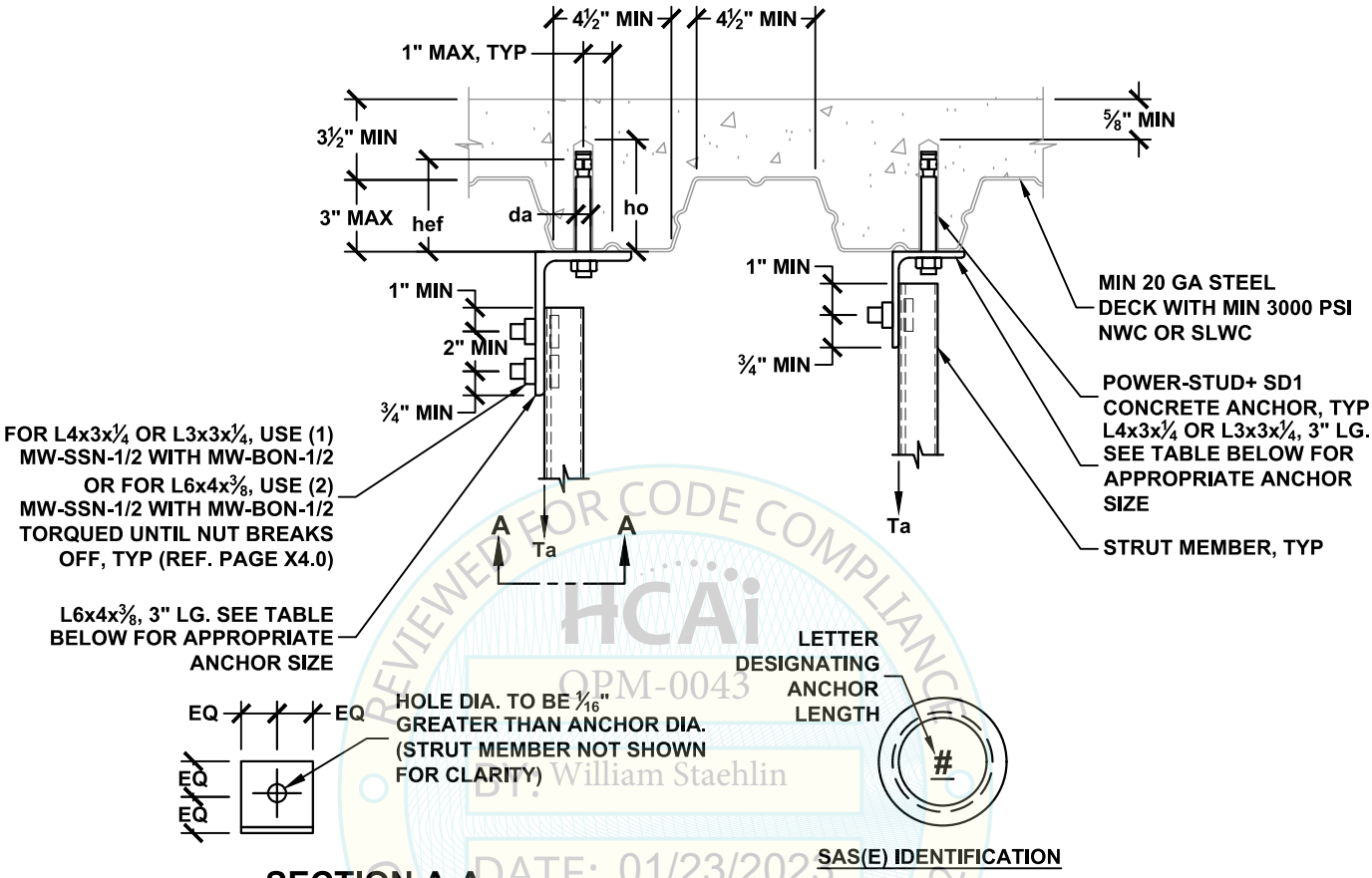

SECTION A-A

HANGER ATTACHMENT TYPE	STEEL COMPONENT ALLOWABLE VERTICAL LOAD Ta LBS	HANGER ATTACHMENT TYPE	CONCRETE ANCHOR ALLOWABLE VERTICAL LOAD Tac [1] LBS	ANGLE SIZE [2]	MASON IND. N.Y. SAS(E) CONCRETE ANCHOR (ICC ESR-3037) SPECIAL INSPECTION REQ'D					
					DIA. da INCH	MIN EFF. EMBED hef INCH	MIN HOLE DEPTH ho INCH	MIN SPACING Smin INCH	MIN END DIST. Cmin INCH	TORQUE REQ'D FT-LBS
38A TO 38G	670	38A TO 38E	430	L3x3x¼ / L4x3x¼	⅜	1⅝	2⅛	6¾	3⅜	30
38A TO 38G	670	38A TO 38K	1070	L3x3x¼ / L4x3x¼	⅜	3	3½	9	4½	30
50A TO 50G	670	50A TO 50H	840	L3x3x¼ / L4x3x¼	½	2¼	3	6¾	3⅜	60
50A TO 50K	1140	50A TO 50K	1120	L6x4x⅜	½	4	4¾	12	6	60
63A TO 63K	1140	63A TO 63K	1070	L6x4x⅜	⅝	2¾	3⅝	8¼	4⅛	90
63A TO 63K	1140	63A TO 63N	2040	L6x4x⅜	⅝	5	5⅞	15	7½	90

SEE DETAIL M0.00 FOR SECTION NOTES

[1] ALLOWABLE LOADS HAVE BEEN INCREASED BY A FACTOR OF 1.2 FOR LOAD COMBINATIONS INCLUDING OVERSTRENGTH, Ω_0, PER ASCE 7-10 SEC. 12.4.3.3.

[2] ASTM A36, Fy = 36 KSI

MASON WEST
1601 E. Miraloma Ave. Placentia, CA 92870
TEL (714) 630 - 0701, www.masonwest.com

Jiefu "Jeff" Zhang, SE
California SE No. S5270

PAGE
M8.41

REVIEWED FOR CODE COMPLIANCE
HCAi
OPM-0043
BY: William Staehlin
DATE: 01/23/2023
CALIFORNIA BUILDING CODE, 2022

ANGLE CLIP ATTACHMENT
TO CONCRETE SLAB, BEAM OR WALL
WITH (1) HILTI KB-TZ2 CARBON STEEL CONCRETE ANCHOR

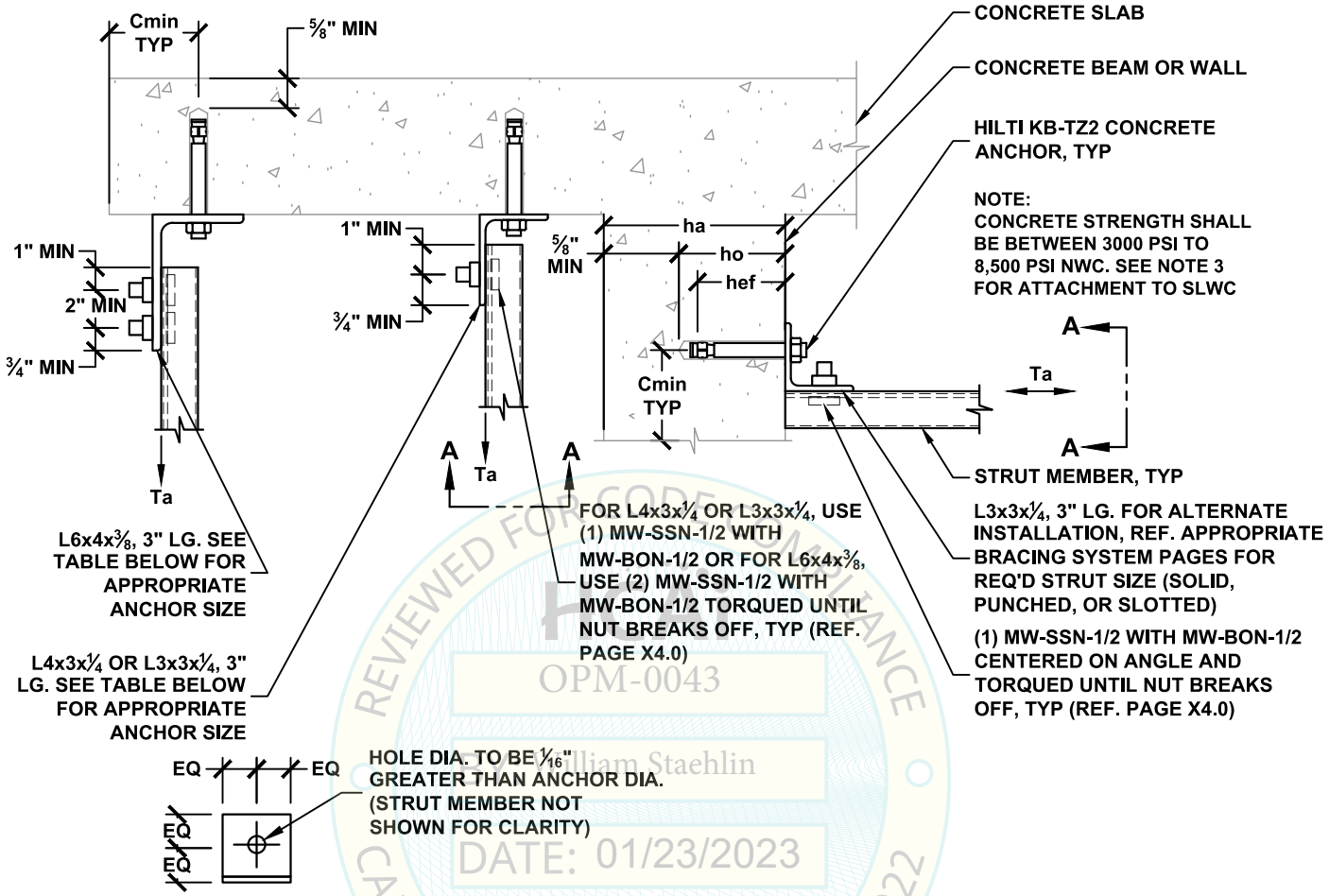

SECTION A-A

HANGER ATTACHMENT TYPE	STEEL COMPONENT ALLOWABLE TENSION LOAD Ta LBS	HANGER ATTACHMENT TYPE	CONCRETE ANCHOR ALLOWABLE TENSION LOAD Tac [1,3] LBS	ANGLE SIZE [2]	HILTI KB-TZ2 CONCRETE ANCHOR (ICC ESR-4266) SPECIAL INSPECTION REQ'D						
					DIA. da INCH	MIN EFF. EMBED. hef INCH	MIN HOLE DEPTH ho INCH	MIN BASE TH. ha INCH	MIN EDGE Cmin INCH	MIN SPACING Smin INCH	TORQUE REQ'D FT-LBS
38A TO 38G	670	38A TO 38L	1330	L3x3x1/4 / L4x3x1/4	3/8	2	2 3/4	4	4 1/2	6	30
50A TO 50G	670	50A TO 50L	1330	L3x3x1/4 / L4x3x1/4	1/2	2	2 3/4	4	4 1/2	6	50
50A TO 50K	1140	50A TO 50N	2230	L6x4x3/8	1/2	3 1/4	4 1/4	5 1/2	6	9 3/4	50
63A TO 63K	1140	63A TO 63P	3050	L6x4x3/8	5/8	4	4 3/4	6	12	12	40

SEE DETAIL M0.00 FOR SECTION NOTES

[1] ALLOWABLE LOADS HAVE BEEN INCREASED BY A FACTOR OF 1.2 FOR LOAD COMBINATIONS INCLUDING OVERSTRENGTH, Ω_0, PER ASCE 7-10 SEC. 12.4.3.3 OR ASCE 7-16 SEC. 2.4.5.

[2] ASTM A36, Fy = 36 KSI

[3] FOR SLWC SLAB AND BEAM, REDUCE ALLOWABLE TENSION LOAD BY MULTIPLYING ALLOWABLE LOAD BY A FACTOR OF 0.68.

MASON WEST
1601 E. Miraloma Ave. Placentia, CA 92870
TEL (714) 630 - 0701, www.masonwest.com

Jiefu "Jeff" Zhang, SE
California SE No. S5270

PAGE
M8.130

REVIEWED FOR CODE COMPLIANCE
OPM-0043
William Staehlin
DATE: 01/23/2023
CALIFORNIA BUILDING CODE 2022

ANGLE CLIP ATTACHMENT
TO CONCRETE FILLED METAL DECK
WITH (1) HILTI KB-TZ2 CARBON STEEL CONCRETE ANCHOR

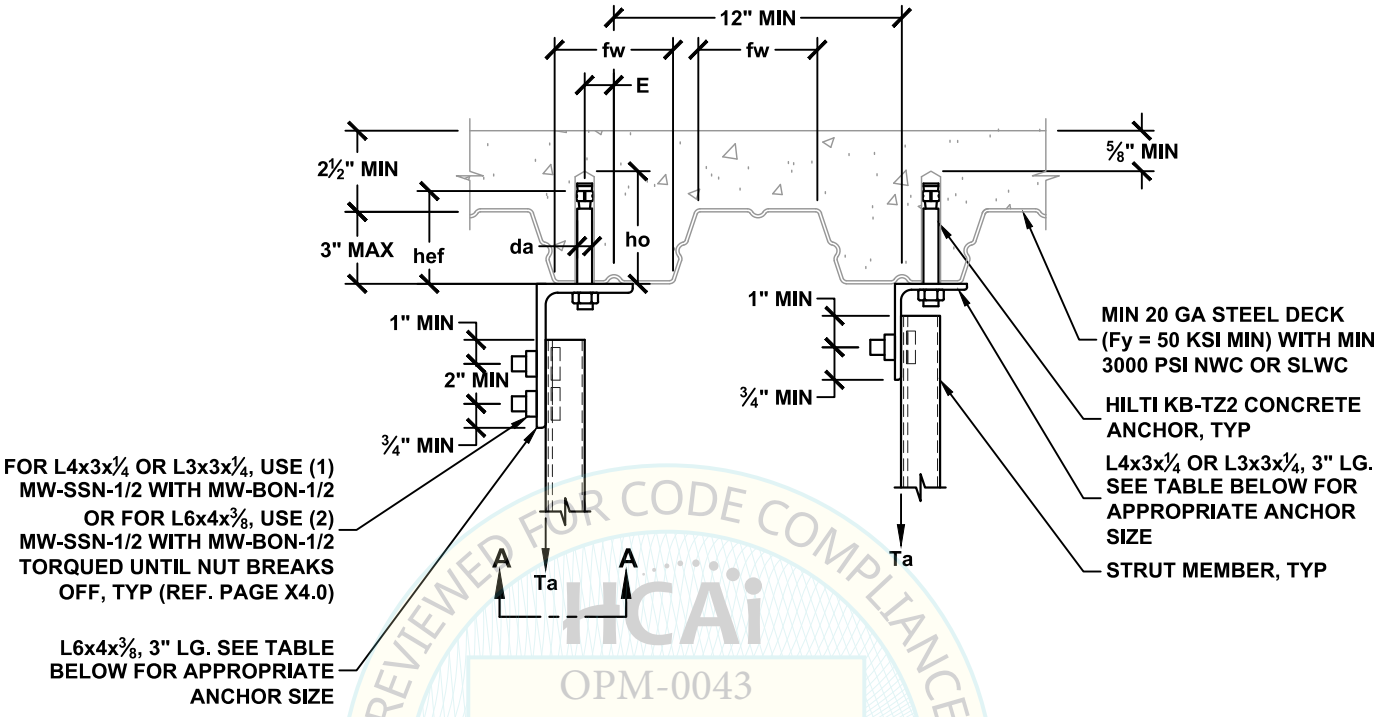

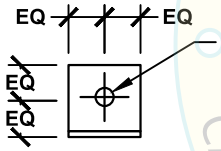

SECTION A-A

MIN FLUTE WIDTH fw INCH	MAX OFFSET E INCH
3⅞	15/16
4½	1

HANGER ATTACHMENT TYPE	STEEL COMPONENT ALLOWABLE VERTICAL LOAD Ta LBS	HANGER ATTACHMENT TYPE	CONCRETE ANCHOR ALLOWABLE VERTICAL LOAD Tac [1] LBS	ANGLE SIZE [2]	HILTI KB-TZ2 CONCRETE ANCHOR (ICC ESR-4266) SPECIAL INSPECTION REQ'D					
					DIA. da INCH	MIN EFF. EMBED hef INCH	MIN HOLE DEPTH ho INCH	MIN SPACING Smin INCH	MIN END DIST. Cmin INCH	TORQUE REQ'D FT-LBS
38A TO 38G	670	38A TO 38J	980	L3x3x¼ / L4x3x¼	⅜	2½	3¼	MAX OF: 3*hef OR 1.5*FLUTE WIDTH	3¾	30
50A TO 50G	670	50A TO 50L	1340	L3x3x¼ / L4x3x¼	½	2½	3¼		3¾	50
50A TO 50K	1140	50A TO 50L	1370	L6x4x⅜	½	3¼	4¼		4⅞	50
63A TO 63K	1140	63A TO 63M	1800	L6x4x⅜	⅝	4	4¾		6	40

SEE DETAIL M0.00 FOR SECTION NOTES

[1] ALLOWABLE LOADS HAVE BEEN INCREASED BY A FACTOR OF 1.2 FOR LOAD COMBINATIONS INCLUDING OVERSTRENGTH, Ω_0, PER ASCE 7-10 SEC. 12.4.3.3 OR ASCE 7-16 SEC. 2.4.5.

[2] ASTM A36, Fy = 36 KSI

MASON WEST
1601 E. Miraloma Ave. Placentia, CA 92870
TEL (714) 630 - 0701, www.masonwest.com

Jiefu "Jeff" Zhang, SE
California SE No. S5270

PAGE
M8.131

REVIEWED FOR CODE COMPLIANCE
HCAi
OPM-0043
William Staehlin
DATE: 01/23/2023
CALIFORNIA BUILDING CODE 2022

ANGLE CLIP ATTACHMENT
TO CONCRETE FILLED METAL DECK
WITH (1) HILTI KB-TZ2 CARBON STEEL CONCRETE ANCHOR

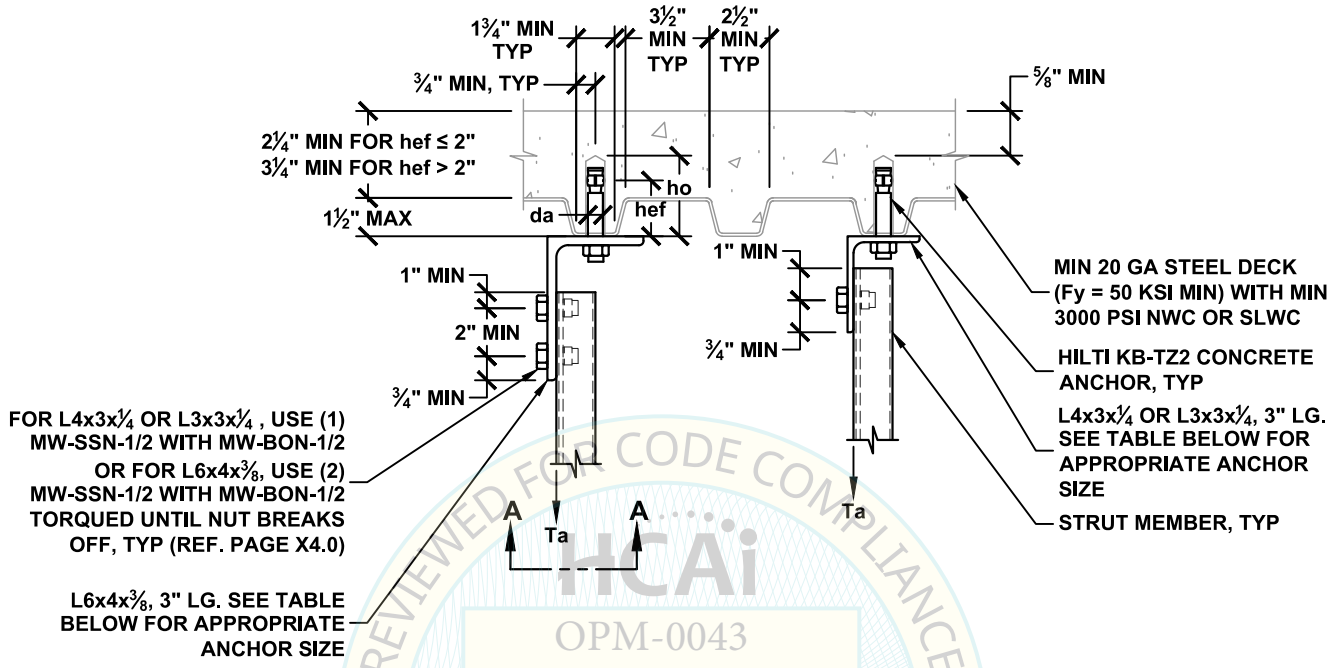

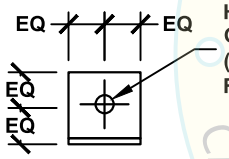

HOLE DIA. TO BE 1/16" GREATER THAN ANCHOR DIA. (STRUT MEMBER NOT SHOWN FOR CLARITY)

SECTION A-A

HANGER ATTACHMENT TYPE	STEEL COMPONENT ALLOWABLE VERTICAL LOAD Ta LBS	HANGER ATTACHMENT TYPE	CONCRETE ANCHOR ALLOWABLE VERTICAL LOAD Tac [1] LBS	ANGLE SIZE [2]	HILTI KB-TZ2 CONCRETE ANCHOR (ICC ESR-4266) SPECIAL INSPECTION REQ'D					
					DIA. da INCH	MIN EFF. EMBED hef INCH	MIN HOLE DEPTH ho INCH	MIN SPACING Smin INCH	MIN END DIST. Cmin INCH	TORQUE REQ'D FT-LBS
38A TO 38G	670	38A TO 38J	870	L3x3x¼ / L4x3x¼	⅜	2	2¾	6	3	30
50A TO 50G	670	50A TO 50G	610	L3x3x¼ / L4x3x¼	½	2	2¾	6	3	50
50A TO 50K	1140	50A TO 50H	770	L6x4x⅜	½	3¼	4¼	9¾	4⅞	50
63A TO 63K	1140	63A TO 63K	1080	L6x4x⅜	⅝	2¾	3¾	8¼	4⅛	40

SEE DETAIL M0.00 FOR SECTION NOTES

[1] ALLOWABLE LOADS HAVE BEEN INCREASED BY A FACTOR OF 1.2 FOR LOAD COMBINATIONS INCLUDING OVERSTRENGTH, Ω_0, PER ASCE 7-10 SEC. 12.4.3.3 OR ASCE 7-16 SEC. 2.4.5.

[2] ASTM A36, Fy = 36 KSI

MASON WEST
1601 E. Miraloma Ave. Placentia, CA 92870
TEL (714) 630 - 0701, www.masonwest.com

Jiefu "Jeff" Zhang, SE
California SE No. S5270

PAGE
M8.132

REVIEWED FOR CODE COMPLIANCE
CALIFORNIA BUILDING CODE 2022
HCAi
OPM-0043
BY: William Staehlin
DATE: 01/23/2023

ALTERNATE ATTACHMENT OF ALL THREAD ROD (ATR) TO STRUT SPANNER

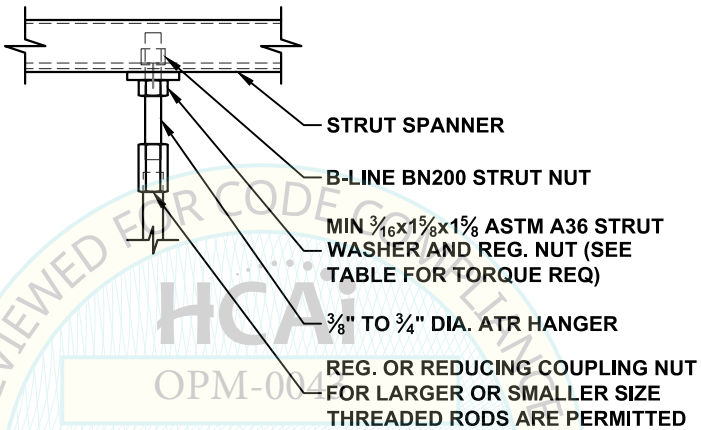

REVIEWED FOR CODE COMPLIANCE
HCAi
OPM-0043
BY: William Staehlin
DATE: 01/23/2023
CALIFORNIA BUILDING CODE, 2022

FASTENER WITH STRUT NUT	
DIA. INCH	TORQUE REQ'D FT-LBS
3/8	19
1/2 - 3/4	50

1 SEE DETAIL M0.00 FOR SECTION NOTES
2 THIS DETAIL MAY BE USED AS AN ALTERNATE ATTACHMENT OF ALL THREAD ROD (ATR) TO A STRUT SPANNER INDICATED IN SECTION M.

MASON WEST
1601 E. Miraloma Ave. Placentia, CA 92870
TEL (714) 630 - 0701, www.masonwest.com

Jiefu "Jeff" Zhang, SE
California SE No. S5270

PAGE
M9.10

HANGER INSTALLATION DETAILS WITH ROD STIFFENER FOR MW-PAL-A-CS CONCRETE INSERT IN CONCRETE SLAB OR BEAM

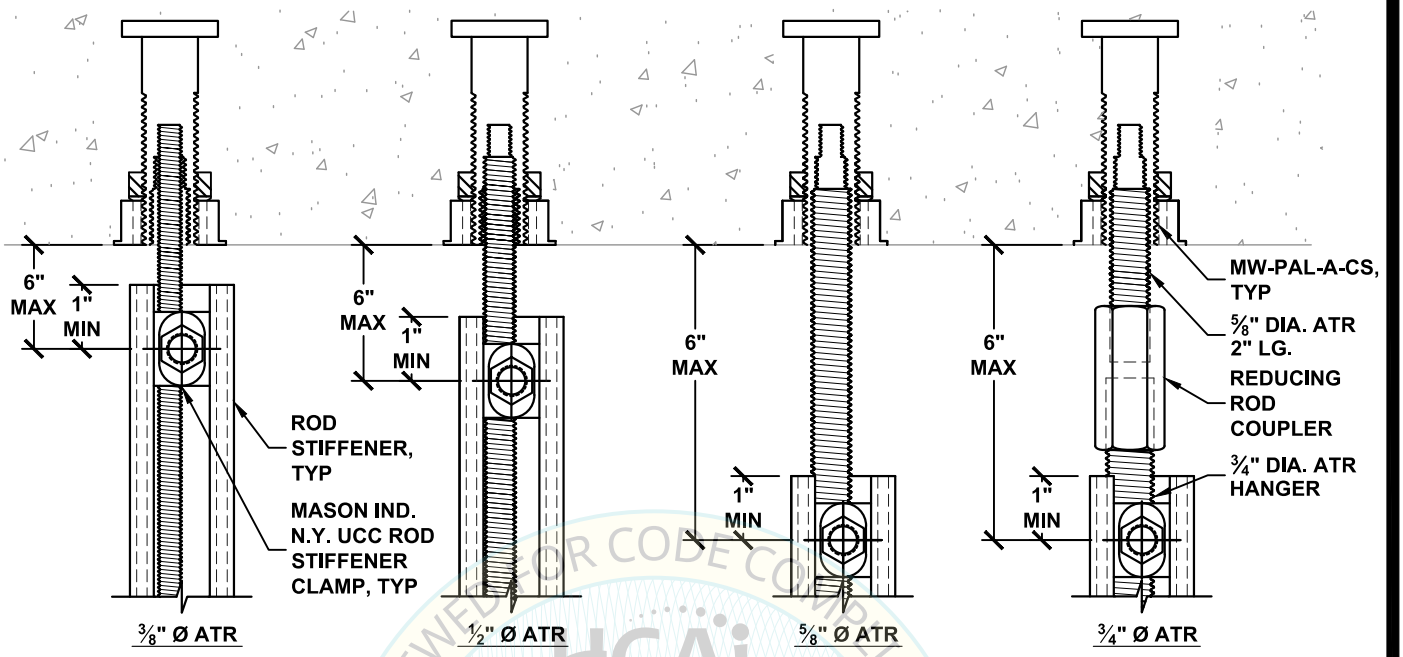

MW-PAL-A-CS CONCRETE INSERT INSTALLED IN CONCRETE SLAB OR BEAM

REVIEWED FOR CODE COMPLIANCE
HCAi
OPM-0043
BY: William Staehlin
DATE: 01/23/2023
CALIFORNIA BUILDING CODE, 2022

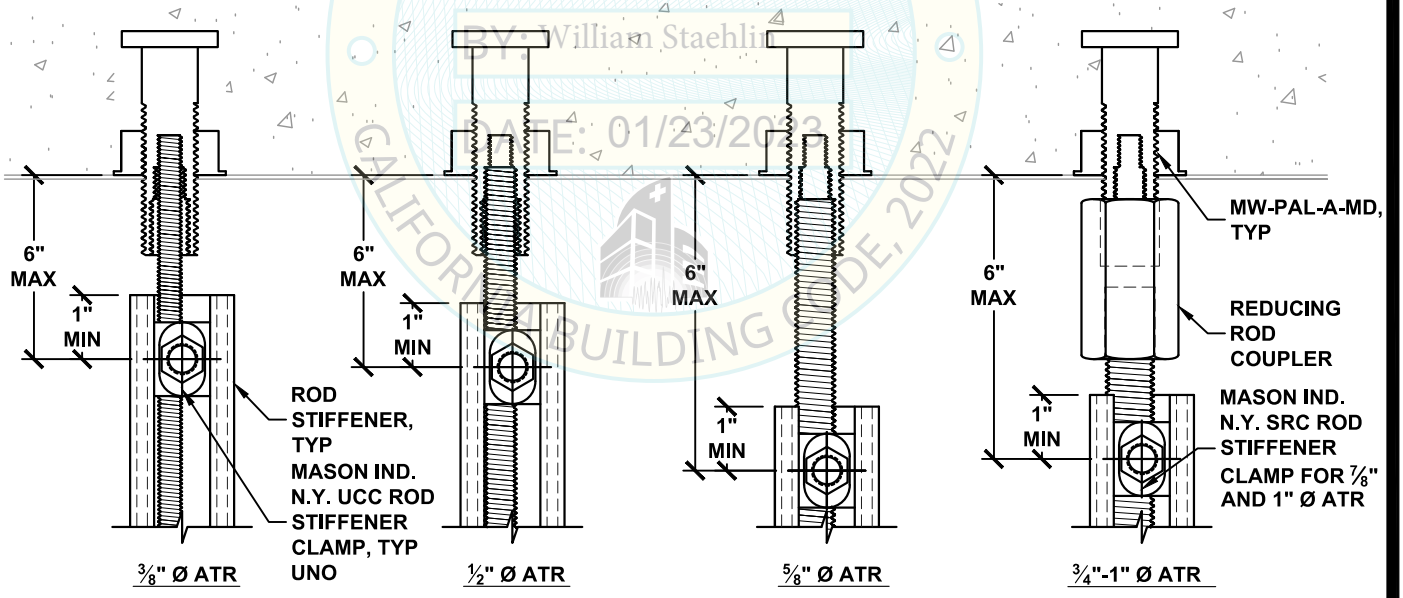

MW-PAL-A-MD CONCRETE INSERT INSTALLED IN CONCRETE FILLED METAL DECK

MASON WEST
1601 E. Miraloma Ave. Placentia, CA 92870
TEL (714) 630 - 0701, www.masonwest.com

Jiefu "Jeff" Zhang, SE
California SE No. S5270

PAGE
M10.10

HANGER INSTALLATION DETAILS WITH ROD STIFFENER FOR EXPANSION ANCHOR

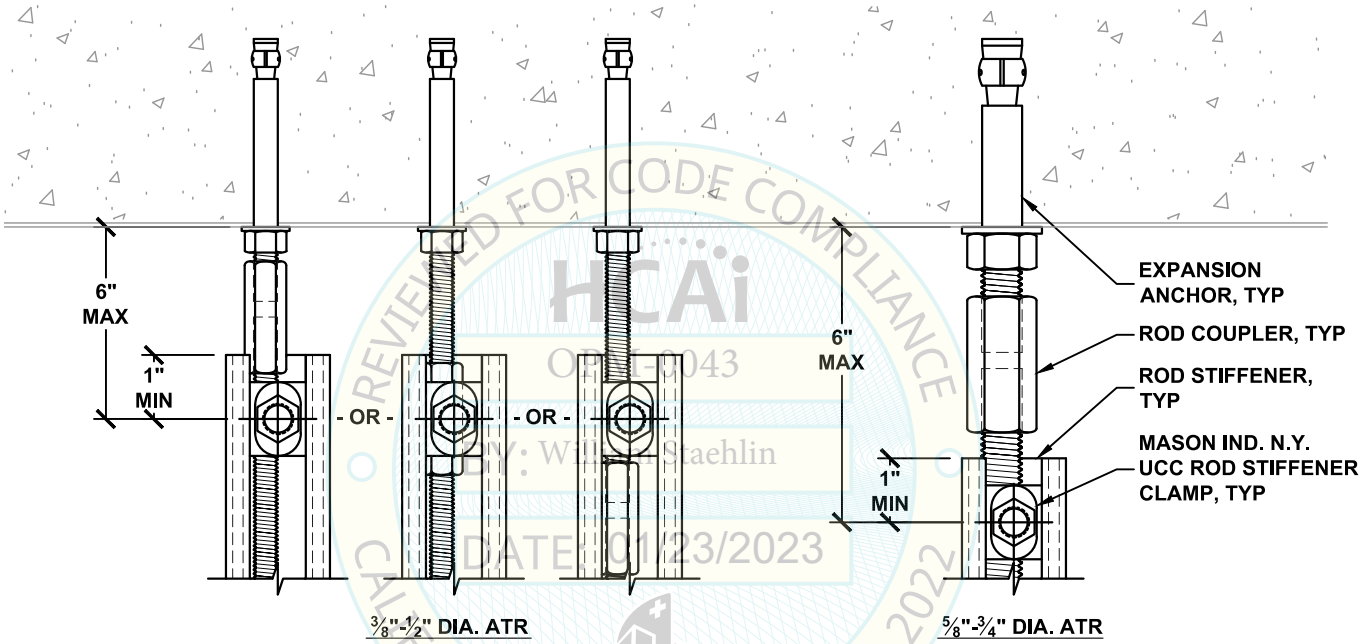

REVIEWED FOR CODE COMPLIANCE
HCAi
OPM-0043
BY: William Staehlin
DATE: 01/23/2023
CALIFORNIA BUILDING CODE 2022

EXPANSION ANCHOR INSTALLED AT THE CONCRETE FILLED METAL DECK

MASON WEST
1601 E. Miraloma Ave. Placentia, CA 92870
TEL (714) 630 - 0701, www.masonwest.com

Jiefu "Jeff" Zhang, SE
California SE No. S5270

PAGE
M10.11

HANGER INSTALLATION DETAILS WITH ROD STIFFENER FOR STEEL OR WOOD ATTACHMENTS

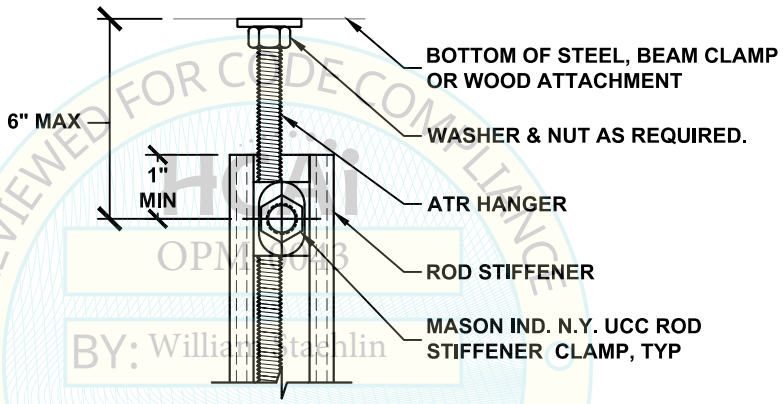

REVIEWED FOR CODE COMPLIANCE
OPM-0043
BY: William Staehlin
DATE: 01/23/2023
CALIFORNIA BUILDING CODE, 2022

MASON WEST
1601 E. Miraloma Ave. Placentia, CA 92870
TEL (714) 630 - 0701, www.masonwest.com

Jiefu "Jeff" Zhang, SE
California SE No. S5270

PAGE
M10.12

BRACE BRACKET DESIGNATION, ATTACHMENT AND SECTION NOTES

BRACE ANCHOR SIZE	
DESIGNATION	DIAMETER (INCH)
38	3/8
50	1/2
63	5/8
75	3/4
88	7/8
100	1
125	1 1/4

HORIZONTAL LOAD RATING	
DESIGNATION	MAXIMUM ALLOWABLE LOAD (LBS)
A	75
B	125
C	175
D	250
E	350
F	450
G	575
H	700
J	850
K	1000
L	1250
M	1600
N	2000
P	2500
Q	3500
R	5000
S	7500
T	11000

NOTES:

1 - "N" SERIES PAGES ARE COMPRISED OF SEISMIC BRACE BRACKET ANCHORAGE CAPACITIES FOR VARIOUS TYPES OF ANCHORAGE CONDITIONS. EACH BRACE BRACKET ATTACHMENT TYPE IS DESIGNATED BY A SET OF NUMBERS AND A LETTER. THE NUMBERS REPRESENTS THE BRACE BRACKET ATTACHMENT SIZE (FOUND IN THE BRACE ANCHOR SIZE TABLE) AND THE LETTER REPRESENTS THE MAXIMUM ALLOWABLE HORIZONTAL LOAD CAPACITY (FOUND IN THE HORIZONTAL LOAD RATING TABLE).

LEGEND (HANGER ATTACHMENT TYPE)

X
- DENOTES BRACKET ANCHOR SIZE
- DENOTES HORIZONTAL LOAD RATING

EXAMPLE: 63L REPRESENTS BRACE BRACKET ANCHOR SIZE OF 5/8"Ø WITH A MAXIMUM HORIZONTAL LOAD RATING OF 1,250 LBS.

2 - BRACE BRACKET ANCHORAGE ATTACHMENTS TO STRUCTURE MAY BE USED WITH ANY ONE OF "N" SERIES PAGES, PROVIDED BRACE BRACKET ATTACHMENT SIZE IS APPROPRIATE FOR THE APPLICATION AND THE ALLOWABLE HORIZONTAL LOAD CAPACITY IS MET.

3 - STRUCTURAL ENGINEER OF RECORD TO VERIFY ADEQUACY OF THE STRUCTURE FOR THE TABULATED LOADS.

4 - NOT USED.

5 - WHEN CONCRETE ANCHORS ARE INSTALLED AT THE BOTTOM OF THE CONCRETE FILLED METAL DECK, MINIMUM END DISTANCE AND SPACING REQUIREMENTS ARE ALONG FLUTE LENGTH ONLY.

6 - SEE X7.0 AND X7.1 FOR STRUT MEMBER DATA.

7 - ALL CONCRETE FLAT SLABS, WALLS, AND BEAMS MUST HAVE A MINIMUM OF #4 BAR OR GREATER BETWEEN THE ANCHOR AND THE EDGE OF CONCRETE.

8 - ON PAGES N1.XX AND N2.XX, THE DESIGN PROFESSIONAL SHALL USE THE ALLOWABLE LATERAL LOADS UNDER OVERSTRENGTH FACTOR Ω_0 =2.0 UNLESS THE LATERAL SUPPORT COMPLIES WITH ONE OF THE CONDITIONS LISTED IN ACI 318-14 CHAPTER 17, SECTION 17.2.3.4.3.

9 - POST-INSTALLED ANCHORS MAY BE INSTALLED A MINIMUM OF 3 BOLT DIAMETERS AWAY FROM ABANDONED HOLES, AND A MINIMUM OF 1.5 BOLT DIAMETERS FROM DRYPACK MORTAR FILLED HOLES. DRYPACK MORTAR SHALL HAVE A COMPRESSIVE STRENGTH EQUAL TO OR GREATER THAN THE CONCRETE STRENGTH IN WHICH IT IS BEING USED.

10 - ALL-THREAD RODS MUST BE MADE OF A36, A307 (GRADE A OR B), OF F1554 GR36 STEEL. ROD COUPLERS MUST CONFORM TO ASTM A563 STEEL WITH A MINIMUM OF 58 KSI TENSILE STRENGTH. MINIMUM ENGAGEMENT IN ROD COUPLER MUST BE EQUAL TO THE ATR DIAMETER.

11 - PER CBC SECTION 1905A.1.9, CONCRETE COMPRESSIVE STRENGTH, f'c, SHALL BE LIMITED TO 8,000 PSI MAX, BUT MAY BE INCREASED SUBJECT TO OSHPD REVIEW AND APPROVAL ON A PROJECT BY PROJECT BASIS.

REVIEWED FOR CODE COMPLIANCE
OPM-0043
BY: William Staehlin
DATE:
CALIFORNIA BUILDING CODE, 2019

MASON WEST
1601 E. Miraloma Ave. Placentia, CA 92870
TEL (714) 630 - 0701, www.masonwest.com

Jiefu "Jeff" Zhang, SE
California SE No. S5270

PAGE
N0.00

SEISMIC BRACKET ATTACHMENT
TO CONCRETE SLAB, BEAM OR WALL
WITH (1) DEWALT/POWERS POWER-STUD+ SD1 CONCRETE ANCHOR

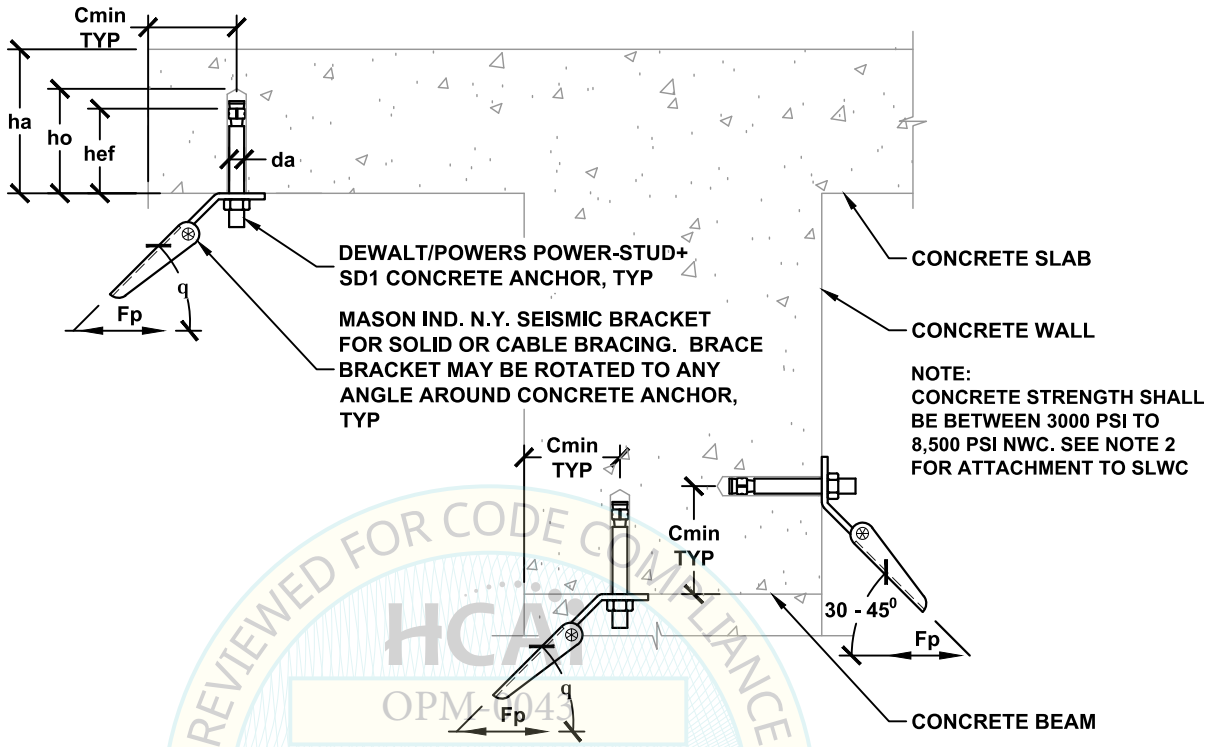

REVIEWED FOR CODE COMPLIANCE
HCAI
OPM-0043
BY: William Staehlin
DATE: 01/23/2023
CALIFORNIA BUILDING CODE 2022

BRACE BRACKET ATTACHMENT TYPE	ALLOWABLE LATERAL LOAD Fp^2 LBS	$\Omega_0 = 2.0^1$ BRACE BRACKET ATTACHMENT TYPE	$\Omega_0 = 2.0^1$ ALLOWABLE LATERAL LOAD Fp^2 LBS	MAX BRACE RANGE q	DEWALT/POWERS POWER-STUD+ SD1 CONCRETE ANCHOR (ICC ESR-2818) SPECIAL INSPECTION REQ'D DIA. da INCH	MIN. EFF. EMBED. hef INCH	MIN. HOLE DEPTH ho INCH	MIN. BASE TH. ha INCH	MIN. EDGE Cmin INCH	MIN. SPACING Smin INCH	TORQUE REQ'D FT-LBS
38A TO 38D	300	38A TO 38D	300	30°- 45°	⅜	2	2⅝	4	4½	6	20
38A TO 38C	180	38A TO 38C	180	46°- 60°							
50A TO 50E	400	50A TO 50E	400	30°- 45°	½	3¼	4	6	4½	9¾	40
50A TO 50C	240	50A TO 50C	240	46°- 60°							
63A TO 63G	610	63A TO 63G	610	30°- 45°	⅝	2¾	3¾	6	6	8¼	80
63A TO 63E	360	63A TO 63E	360	46°- 60°							

SEE DETAIL N0.00 FOR SECTION NOTES

[1] OVERSTRENGTH FACTOR AS REQUIRED FOR ANCHORAGE TO CONCRETE.

[2] FOR SLWC SLAB AND BEAM, REDUCE ALLOWABLE LATERAL LOAD BY MULTIPLYING ALLOWABLE LOAD BY A FACTOR OF 0.6.

[3] EDGE DISTANCE PERPENDICULAR TO Cmin SHALL BE 1.5*Cmin, MINIMUM.

MASON WEST
1601 E. Miraloma Ave. Placentia, CA 92870
TEL (714) 630 - 0701, www.masonwest.com

Jiefu "Jeff" Zhang, SE
California SE No. S5270

PAGE
N1.30

SEISMIC BRACKET ATTACHMENT
TO CONCRETE SLAB, BEAM OR WALL
WITH (2) DEWALT/POWERS POWER-STUD+ SD1 CONCRETE ANCHORS

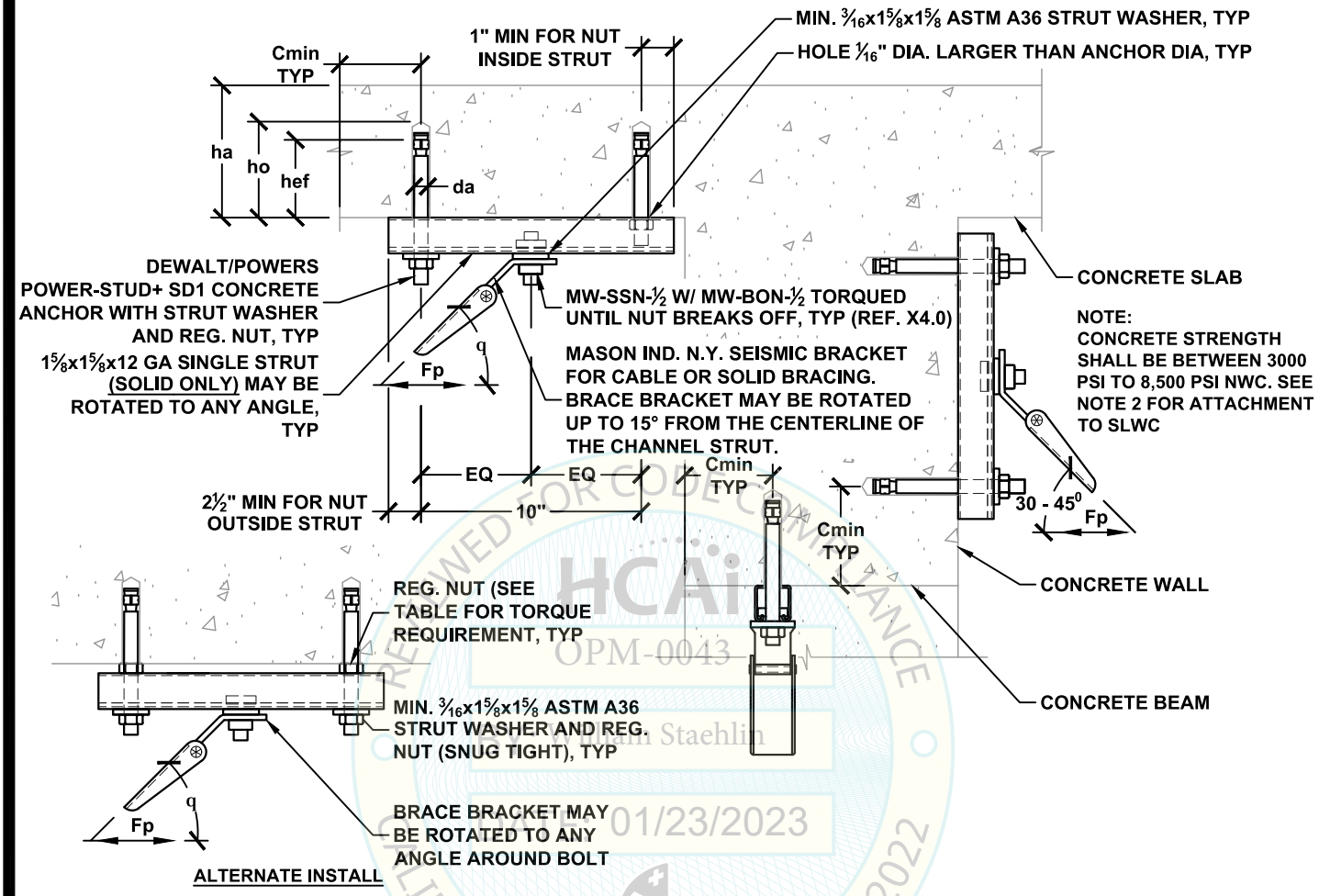

BRACE BRACKET ATTACHMENT TYPE	ALLOWABLE LATERAL LOAD Fp^2 LBS	$\Omega_0 = 2.0^1$ BRACE BRACKET ATTACHMENT TYPE	$\Omega_0 = 2.0^1$ ALLOWABLE LATERAL LOAD Fp^2 LBS	MAX BRACE RANGE q	DEWALT/POWERS POWER-STUD+ SD1 CONCRETE ANCHOR (ICC ESR-2818) SPECIAL INSPECTION REQ'D DIA. da INCH	MIN. EFF. EMBED. hef INCH	MIN. HOLE DEPTH ho INCH	MIN. BASE TH. ha INCH	MIN. EDGE Cmin INCH	MIN. SPACING Smin INCH	TORQUE REQ'D FT-LBS
50A TO 50G	620	50A TO 50F	470	30°- 45°	3/8	2	2 5/8	4	4 1/2	6	20
50A TO 50F	530	50A TO 50E	360	46°- 60°							
50A TO 50G	620	50A TO 50F	470	30°- 45°	1/2	3 1/4	4	6	4 1/2	9 3/4	40
50A TO 50F	530	50A TO 50E	360	46°- 60°							

SEE DETAIL N0.00 FOR SECTION NOTES

[1] OVERSTRENGTH FACTOR AS REQUIRED FOR ANCHORAGE TO CONCRETE.

[2] FOR SLWC SLAB AND BEAM, REDUCE ALLOWABLE LATERAL LOAD BY MULTIPLYING ALLOWABLE LOAD BY A FACTOR OF 0.6.

[3] EDGE DISTANCE PERPENDICULAR TO Cmin SHALL BE 1.5*Cmin, MINIMUM.

MASON WEST
1601 E. Miraloma Ave. Placentia, CA 92870
TEL (714) 630 - 0701, www.masonwest.com

Jiefu "Jeff" Zhang, SE
California SE No. S5270

PAGE
N1.31

HCAi OPM-0043 Reviewed for Code Compliance by William Staehlin 01/23/2023 CALIFORNIA BUILDING CODE 2022

SEISMIC BRACKET ATTACHMENT
TO CONCRETE SLAB, BEAM OR WALL
WITH (2) DEWALT/POWERS POWER-STUD+ SD1 CONCRETE ANCHORS

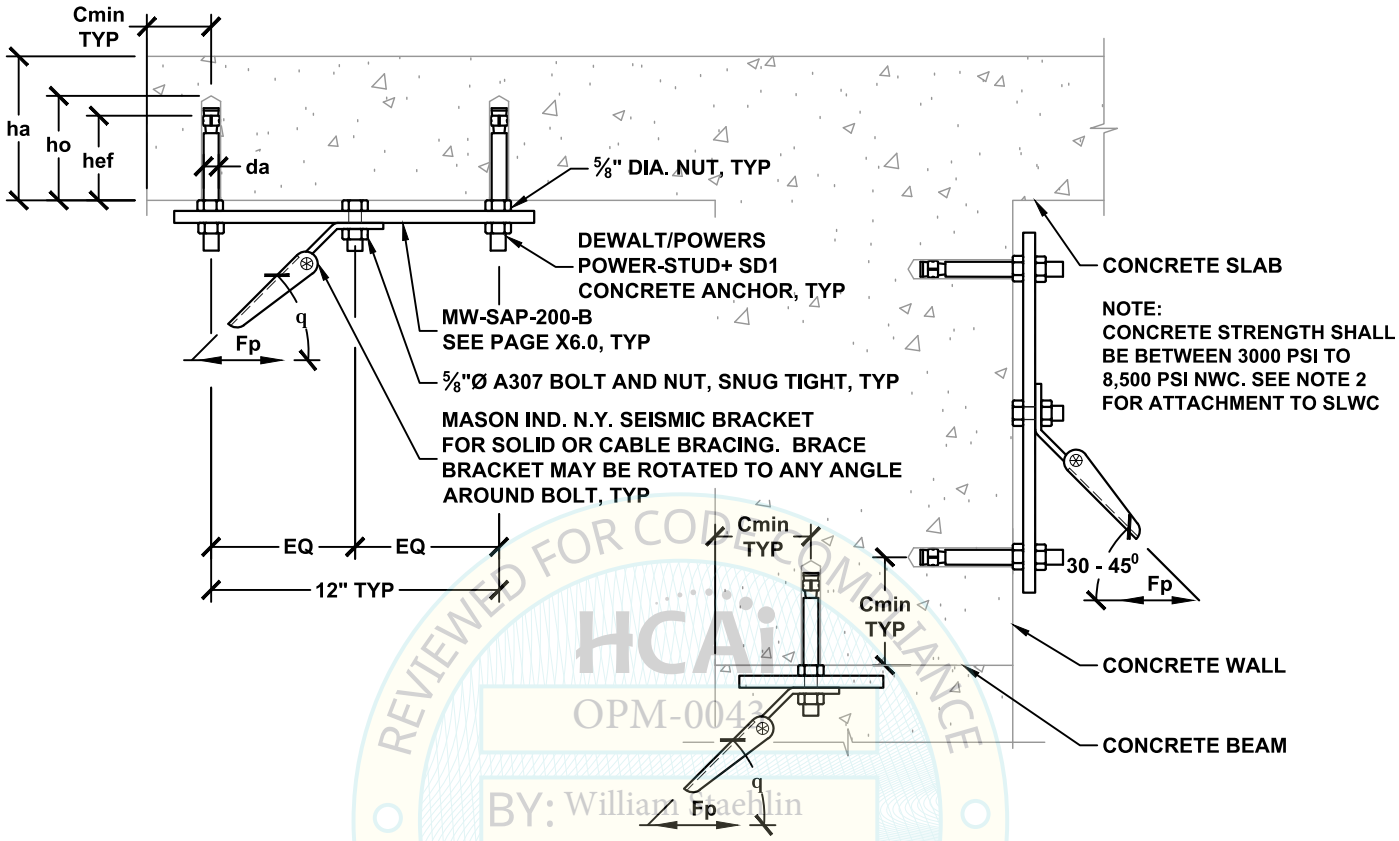

REVIEWED FOR CODE COMPLIANCE
HCAi
OPM-0043
BY: William Staehlin
DATE: 01/23/2023
CALIFORNIA BUILDING CODE, 2022

BRACE BRACKET ATTACHMENT TYPE	ALLOWABLE LATERAL LOAD Fp^2 LBS	$\Omega_0 = 2.0^1$ BRACE BRACKET ATTACHMENT TYPE	$\Omega_0 = 2.0^1$ ALLOWABLE LATERAL LOAD Fp^2 LBS	MAX BRACE RANGE q	DEWALT/POWERS POWER-STUD+ SD1 CONCRETE ANCHOR (ICC ESR-2818) SPECIAL INSPECTION REQ'D DIA. da INCH	MIN. EFF. EMBED. hef INCH	MIN. HOLE DEPTH ho INCH	MIN. BASE TH. ha INCH	MIN. EDGE Cmin INCH	MIN. SPACING Smin INCH	TORQUE REQ'D FT-LBS
63A TO 63M	1930	63A TO 63L	1270	30°- 45°	⅝	2¾	3¾	6	6	8¼	80
63A TO 63K	1110	63A TO 63J	880	46°- 60°							

SEE DETAIL N0.00 FOR SECTION NOTES
[1] OVERSTRENGTH FACTOR AS REQUIRED FOR ANCHORAGE TO CONCRETE.
[2] FOR SLWC SLAB AND BEAM, REDUCE ALLOWABLE LATERAL LOAD BY MULTIPLYING ALLOWABLE LOAD BY A FACTOR OF 0.6.
[3] EDGE DISTANCE PERPENDICULAR TO Cmin SHALL BE 1.5*Cmin, MINIMUM.

MASON WEST
1601 E. Miraloma Ave. Placentia, CA 92870
TEL (714) 630 - 0701, www.masonwest.com

Jiefu "Jeff" Zhang, SE
California SE No. S5270

PAGE
N1.32

SEISMIC BRACKET ATTACHMENT
TO CONCRETE SLAB, BEAM OR WALL
WITH (4) DEWALT/POWERS POWER-STUD+ SD1 CONCRETE ANCHORS

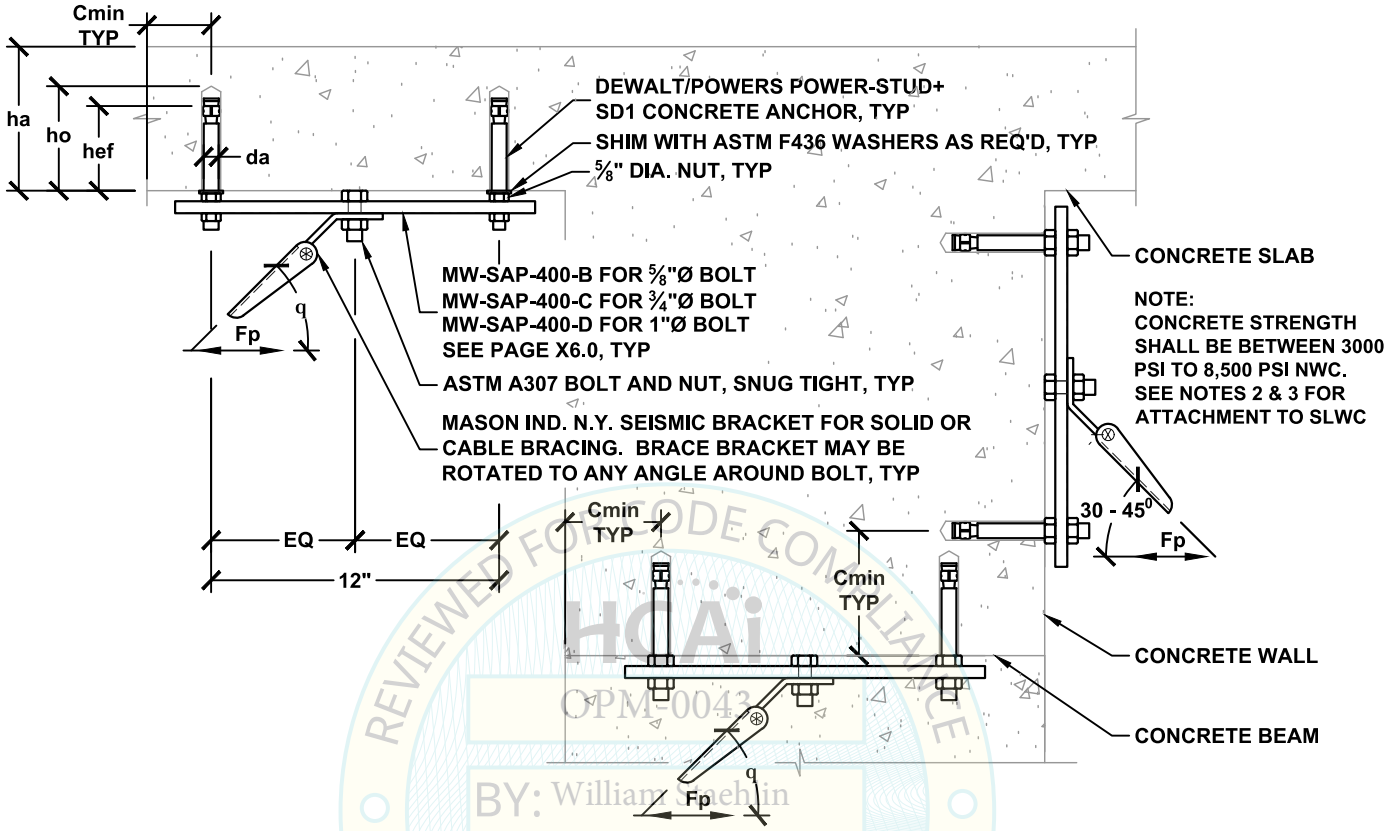

HCAi
OPM-0043
BY: William Staehlin
DATE: 01/23/2023
REVIEWED FOR CODE COMPLIANCE
CALIFORNIA BUILDING CODE 2022

BRACE BRACKET ATTACHMENT TYPE	ALLOWABLE LATERAL LOAD Fp^2 LBS	$\Omega_0 = 2.0^1$ BRACE BRACKET ATTACHMENT TYPE	ALLOWABLE LATERAL LOAD Fp^3 LBS	MAX BRACE RANGE q	BOLT DIA. INCH	DEWALT/POWERS POWER-STUD+ SD1 CONCRETE ANCHOR (ICC ESR-2818) SPECIAL INSPECTION REQ'D: DIA. da INCH	MIN. EFF. EMBED. hef INCH	MIN. HOLE DEPTH ho INCH	MIN. BASE TH. ha INCH	MIN. EDGE Cmin INCH	MIN. SPACING Smin INCH	TORQUE REQ'D FT-LBS
63A TO 63P	3080	63A TO 63P	2530	30°- 45°	5/8	5/8	2 3/4	3 3/4	6	6	8 1/4	80
63A TO 63N	2080	63A TO 63M	1750	46°- 60°	5/8							
75A TO 75Q	3500	75A TO 75P	2530	30°- 45°	3/4							
75A TO 75N	2020	75A TO 75M	1750	46°- 60°	3/4							
100A TO 100Q	3500	100A TO 100P	2530	30°- 45°	1							
100A TO 100N	2020	100A TO 100M	1750	46°- 60°	1							

SEE DETAIL N0.00 FOR SECTION NOTES

[1] OVERSTRENGTH FACTOR AS REQUIRED FOR ANCHORAGE TO CONCRETE.

[2] FOR BRACE BRACKET ATTACHMENTS WITHOUT OVERSTRENGTH FACTOR TO SLWC SLAB AND BEAM, THE ALLOWABLE LATERAL LOAD SHALL BE TAKEN AS 2530 LBS FOR 30°-45° MAX BRACE RANGE AND 1750 LBS FOR 46°-60° MAX BRACE RANGE.

[3] FOR BRACE BRACKET ATTACHMENTS WITH OVERSTRENGTH FACTOR TO SLWC SLAB AND BEAM, REDUCE ALLOWABLE LATERAL LOAD BY MULTIPLYING ALLOWABLE LOAD BY A FACTOR OF 0.6.

[4] EDGE DISTANCE PERPENDICULAR TO Cmin SHALL BE 1.5*Cmin, MINIMUM.

MASON WEST
1601 E. Miraloma Ave. Placentia, CA 92870
TEL (714) 630 - 0701, www.masonwest.com

Jiefu "Jeff" Zhang, SE
California SE No. S5270

PAGE
N1.33

SEISMIC BRACKET ATTACHMENT
TO CONCRETE SLAB, BEAM OR WALL
WITH (1) MASON IND. N.Y. SAS(E) CONCRETE ANCHOR

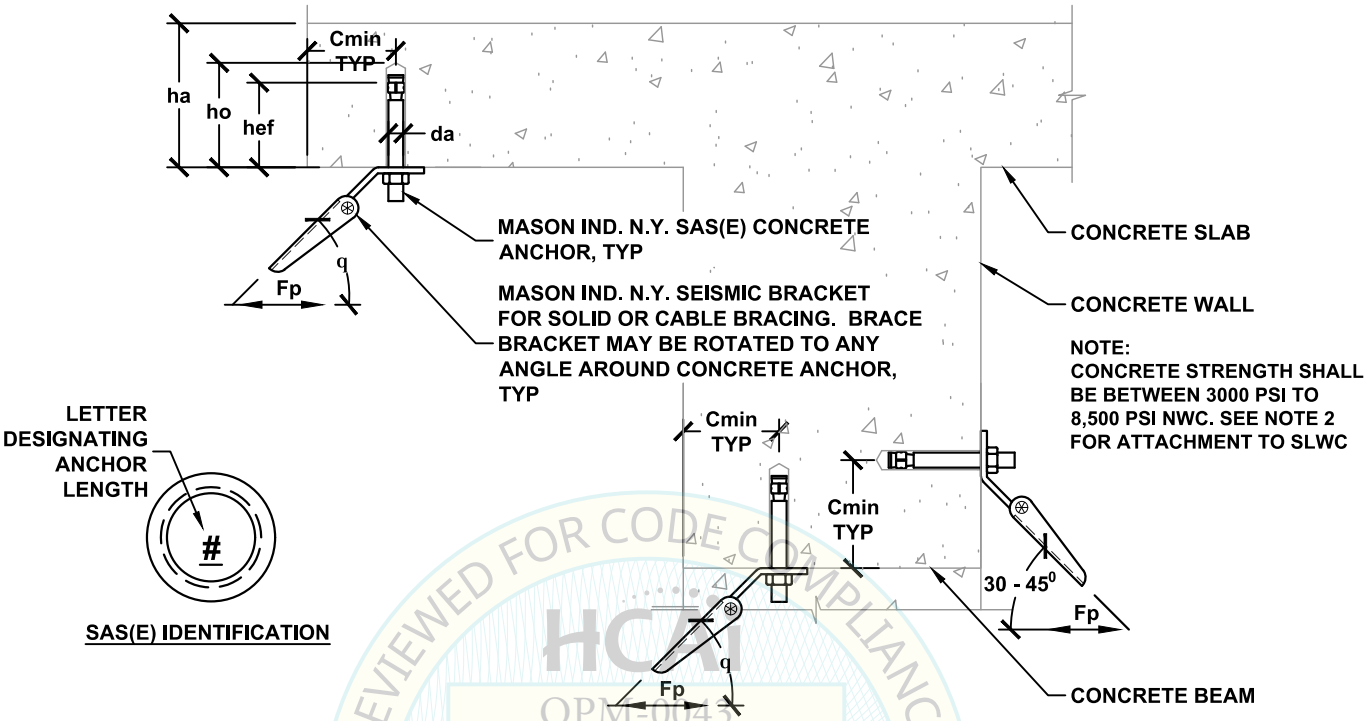

REVIEWED FOR CODE COMPLIANCE
HCAI
OPM-0043
BY: William Staehlin
DATE: 01/23/2023
CALIFORNIA BUILDING CODE, 2022

BRACE BRACKET ATTACHMENT TYPE	ALLOWABLE LATERAL LOAD Fp^2 LBS	$\Omega_0 = 2.0^1$ BRACE BRACKET ATTACHMENT TYPE	$\Omega_0 = 2.0^1$ ALLOWABLE LATERAL LOAD Fp^2 LBS	MAX BRACE RANGE q	MASON IND. N.Y. SAS(E) CONCRETE ANCHOR (ICC ESR-3037) SPECIAL INSPECTION REQ'D DIA. da INCH	MIN. EFF. EMBED. hef INCH	MIN. HOLE DEPTH ho INCH	MIN. BASE TH. ha INCH	MIN. EDGE Cmin INCH	MIN. SPACING Smin INCH	TORQUE REQ'D FT-LBS
38A TO 38E	360	38A TO 38D	330	30°- 45°	⅜	2½	3	4½	6	7½	30
38A TO 38C	230	38A TO 38C	230	46°- 60°							
50A TO 50F	450	50A TO 50F	450	30°- 45°	½	2¼	3	4½	7	6¾	60
50A TO 50D	270	50A TO 50D	270	46°- 60°							
50A TO 50G	620	50A TO 50G	620	30°- 45°	½	3⅜	4⅛	6	7	10½	60
50A TO 50E	360	50A TO 50E	360	46°- 60°							
63A TO 63K	1100	63A TO 63K	1100	30°- 45°	⅝	4½	5⅜	8	7	13½	90
63A TO 63G	650	63A TO 63G	650	46°- 60°							
75A TO 75L	1340	75A TO 75L	1340	30°- 45°	¾	5	6	9	7	15	150
75A TO 75H	790	75A TO 75H	790	46°- 60°							

SEE DETAIL N0.00 FOR SECTION NOTES
[1] OVERSTRENGTH FACTOR AS REQUIRED FOR ANCHORAGE TO CONCRETE.
[2] FOR SLWC SLAB AND BEAM, REDUCE ALLOWABLE LATERAL LOAD BY MULTIPLYING ALLOWABLE LOAD BY A FACTOR OF 0.6.
[3] EDGE DISTANCE PERPENDICULAR TO Cmin SHALL BE 1.5*Cmin, MINIMUM.

MASON WEST
1601 E. Miraloma Ave. Placentia, CA 92870
TEL (714) 630 - 0701, www.masonwest.com

Jiefu "Jeff" Zhang, SE
California SE No. S5270

PAGE
N1.40

SEISMIC BRACKET ATTACHMENT
TO CONCRETE SLAB, BEAM OR WALL
WITH (2) MASON IND. N.Y. SAS(E) CONCRETE ANCHORS

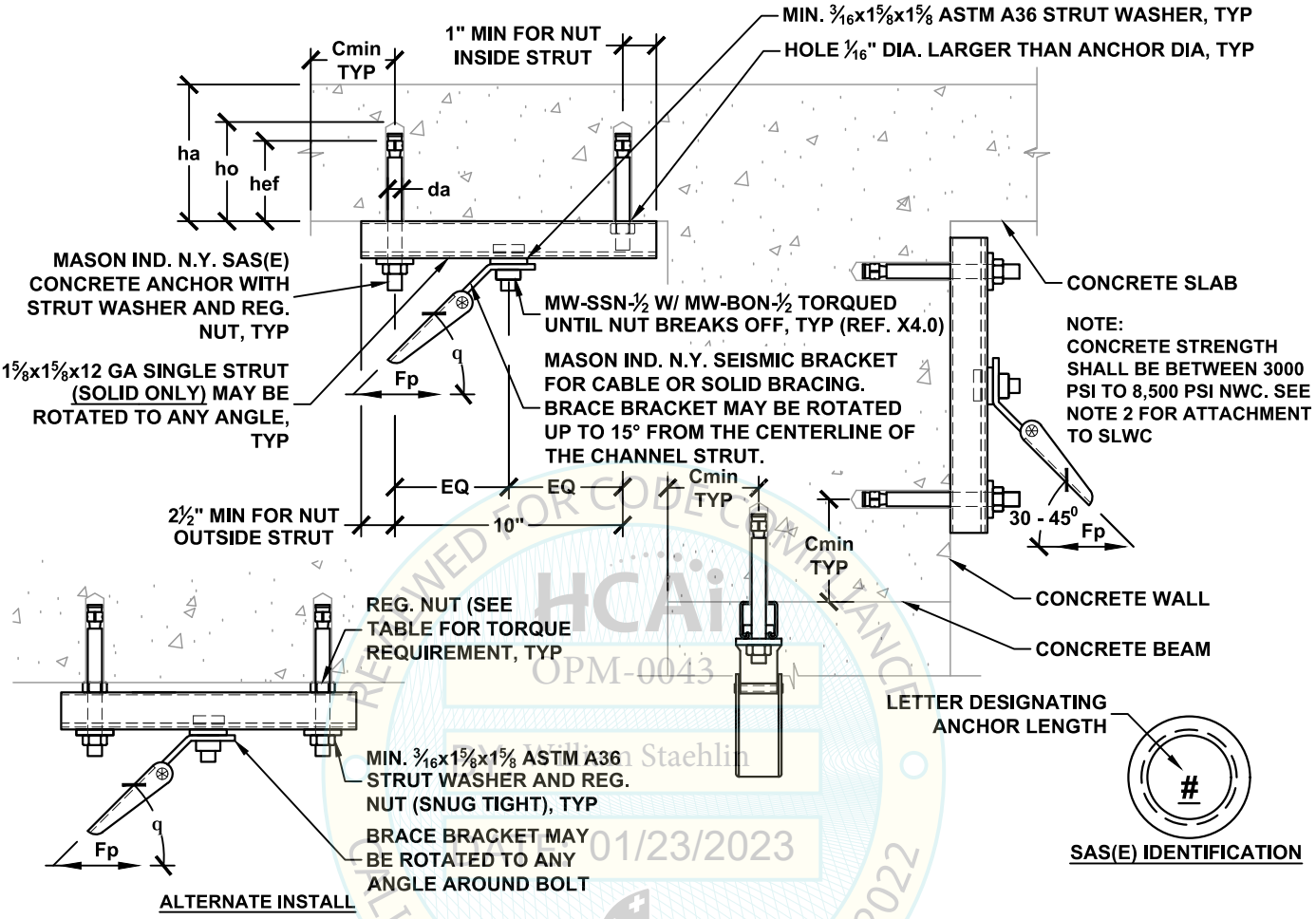

REVIEWED FOR CODE COMPLIANCE
HCAi
OPM-0043
By William Staehlin
01/23/2023
CALIFORNIA BUILDING CODE 2022

BRACE BRACKET ATTACHMENT TYPE	ALLOWABLE LATERAL LOAD F_p^2 LBS	$\Omega_0 = 2.0^1$ BRACE BRACKET ATTACHMENT TYPE	ALLOWABLE LATERAL LOAD F_p^2 LBS	MAX BRACE RANGE q	MASON IND. N.Y. SAS(E) CONCRETE ANCHORS (ICC ESR-3037) SPECIAL INSPECTION REQ'D DIA. da INCH	MIN. EFF. EMBED. hef INCH	MIN. HOLE DEPTH ho INCH	MIN. BASE TH. ha INCH	MIN. EDGE Cmin INCH	MIN. SPACING Smin INCH	TORQUE REQ'D FT-LBS
50A TO 50G	620	50A TO 50F	530	30°- 45°	3/8	2 1/2	3	4 1/2	6	7 1/2	30
50A TO 50F	530	50A TO 50E	420	46°- 60°							
50A TO 50G	620	50A TO 50G	620	30°- 45°	1/2	2 1/4	3	4 1/2	7	6 3/4	60
50A TO 50F	530	50A TO 50F	530	46°- 60°							

SEE DETAIL N0.00 FOR SECTION NOTES

[1] OVERSTRENGTH FACTOR AS REQUIRED FOR ANCHORAGE TO CONCRETE.

[2] FOR BRACE BRACKET ATTACHMENTS WITH OVERSTRENGTH FACTOR TO SLWC SLAB AND BEAM, REDUCE ALLOWABLE LATERAL LOAD BY MULTIPLYING ALLOWABLE LOAD BY A FACTOR OF 0.6.

[3] EDGE DISTANCE PERPENDICULAR TO Cmin SHALL BE 1.5*Cmin, MINIMUM.

MASON WEST
1601 E. Miraloma Ave. Placentia, CA 92870
TEL (714) 630 - 0701, www.masonwest.com

Jiefu "Jeff" Zhang, SE
California SE No. S5270

PAGE
N1.41

SEISMIC BRACKET ATTACHMENT
TO CONCRETE SLAB, BEAM OR WALL
WITH (2) MASON IND. N.Y. SAS(E) CONCRETE ANCHORS

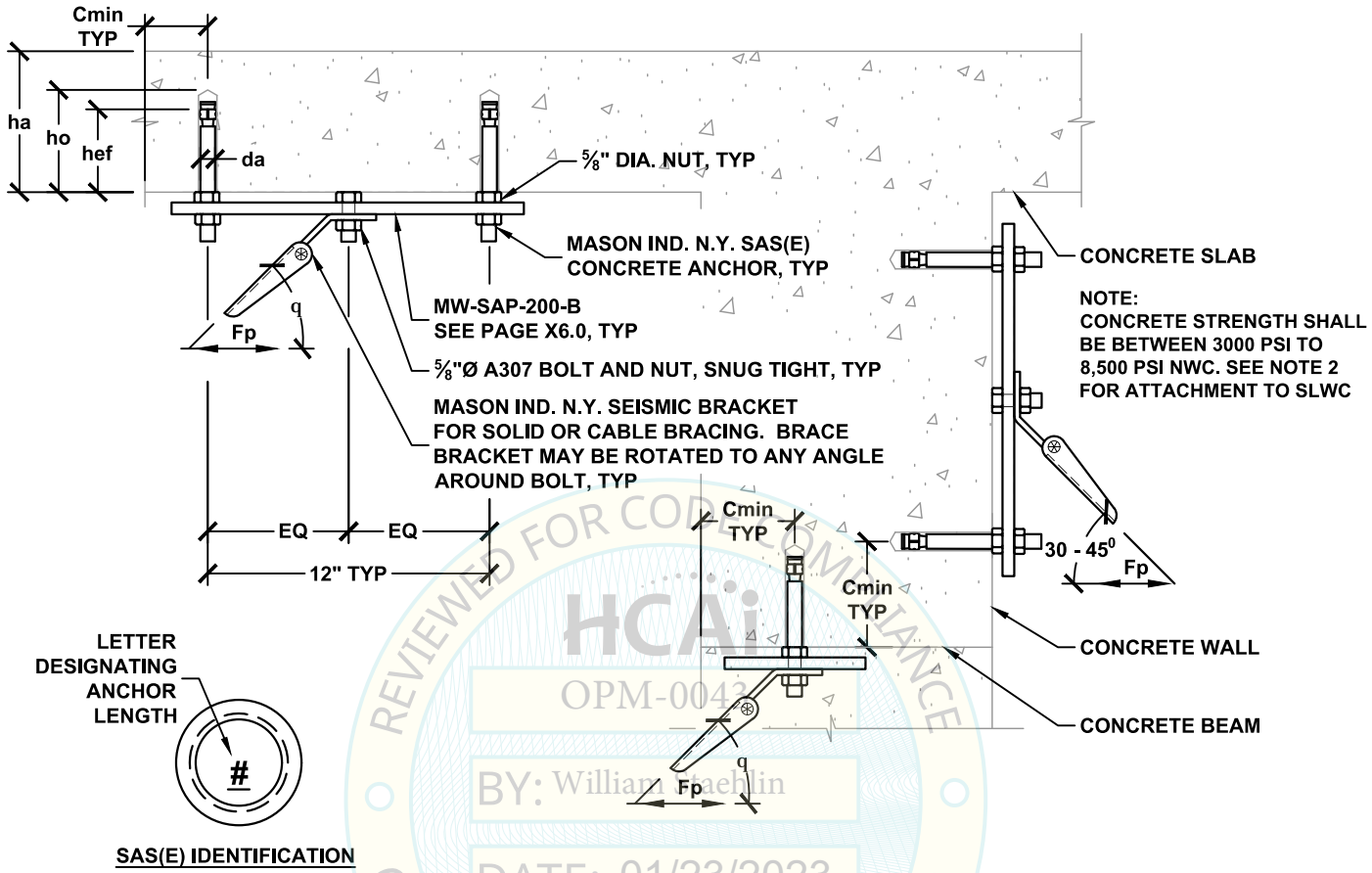

REVIEWED FOR CODE COMPLIANCE
HCAi
OPM-0043
BY: William Staehlin
DATE: 01/23/2023
CALIFORNIA BUILDING CODE, 2022

BRACE BRACKET ATTACHMENT TYPE	ALLOWABLE LATERAL LOAD Fp^2 LBS	$\Omega_0 = 2.0^1$ BRACE BRACKET ATTACHMENT TYPE	$\Omega_0 = 2.0^1$ ALLOWABLE LATERAL LOAD Fp^2 LBS	MAX BRACE RANGE q	MASON IND. N.Y. SAS(E) CONCRETE ANCHOR (ICC ESR-3037) SPECIAL INSPECTION REQ'D DIA. da INCH	MIN. EFF. EMBED. hef INCH	MIN. HOLE DEPTH ho INCH	MIN. BASE TH. ha INCH	MIN. EDGE Cmin INCH	MIN. SPACING Smin INCH	TORQUE REQ'D FT-LBS
63A TO 63M	1930	63A TO 63M	1930	30°- 45°	⅝	4½	5⅜	8	7	13½	90
63A TO 63K	1110	63A TO 63K	1110	46°- 60°							

SEE DETAIL N0.00 FOR SECTION NOTES

[1] OVERSTRENGTH FACTOR AS REQUIRED FOR ANCHORAGE TO CONCRETE.

[2] FOR BRACE BRACKET ATTACHMENTS WITH OVERSTRENGTH FACTOR TO SLWC SLAB AND BEAM, REDUCE ALLOWABLE LATERAL LOAD BY MULTIPLYING ALLOWABLE LOAD BY A FACTOR OF 0.6.

[3] EDGE DISTANCE PERPENDICULAR TO Cmin SHALL BE 1.5*Cmin, MINIMUM.

MASON WEST
1601 E. Miraloma Ave. Placentia, CA 92870
TEL (714) 630 - 0701, www.masonwest.com

Jiefu "Jeff" Zhang, SE
California SE No. S5270

PAGE
N1.42

SEISMIC BRACKET ATTACHMENT
TO CONCRETE SLAB, BEAM OR WALL
WITH (4) MASON IND. N.Y. SAS(E) CONCRETE ANCHORS

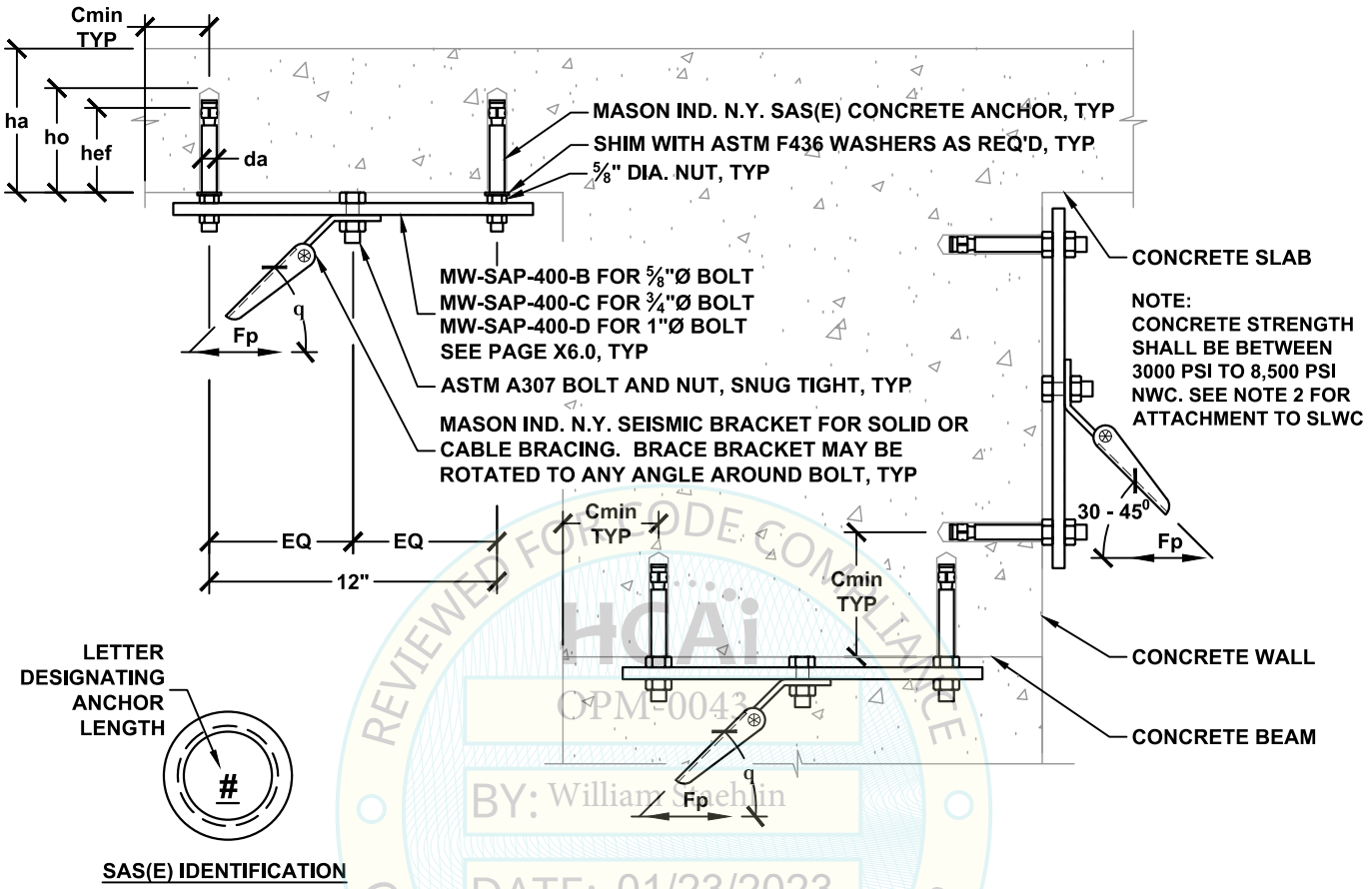

HCAi
OPM-0043
BY: William Staehlin
DATE: 01/23/2023
REVIEWED FOR CODE COMPLIANCE
CALIFORNIA BUILDING CODE, 2022

BRACE BRACKET ATTACHMENT TYPE	ALLOWABLE LATERAL LOAD Fp^2 LBS	$\Omega_0 = 2.0^1$ BRACE BRACKET ATTACHMENT TYPE	$\Omega_0 = 2.0^1$ ALLOWABLE LATERAL LOAD Fp^2 LBS	MAX BRACE RANGE q	BOLT DIA. INCH	MASON IND. N.Y. SAS(E) CONCRETE ANCHOR (ICC ESR-3037) SPECIAL INSPECTION REQ'D DIA. da INCH	MIN. EFF. EMBED. hef INCH	MIN. HOLE DEPTH ho INCH	MIN. BASE TH. ha INCH	MIN. EDGE Cmin INCH	MIN. SPACING Smin INCH	TORQUE REQ'D FT-LBS
63A TO 63P	3080	63A TO 63P	3080	30°- 45°	5/8	5/8	4½	5⅜	8	7	13½	90
63A TO 63N	2080	63A TO 63N	2080	46°- 60°	5/8							
75A TO 75Q	3500	75A TO 75Q	3500	30°- 45°	3/4							
75A TO 75N	2020	75A TO 75N	2020	46°- 60°	3/4							
100A TO 100Q	3500	100A TO 100Q	3500	30°- 45°	1							
100A TO 100N	2020	100A TO 100N	2020	46°- 60°	1							

SEE DETAIL N0.00 FOR SECTION NOTES

[1] OVERSTRENGTH FACTOR AS REQUIRED FOR ANCHORAGE TO CONCRETE.

[2] FOR BRACE BRACKET ATTACHMENTS WITH OVERSTRENGTH FACTOR TO SLWC SLAB AND BEAM, THE ALLOWABLE LATERAL LOAD SHALL BE TAKEN AS 2780 LBS FOR 30°-45° MAX BRACE RANGE AND 1910 LBS FOR 46°-60° MAX BRACE RANGE.

[3] EDGE DISTANCE PERPENDICULAR TO Cmin SHALL BE 1.5*Cmin, MINIMUM.

MASON WEST
1601 E. Miraloma Ave. Placentia, CA 92870
TEL (714) 630 - 0701, www.masonwest.com

Jiefu "Jeff" Zhang, SE
California SE No. S5270

PAGE
N1.43

SEISMIC BRACKET ATTACHMENT
TO CONCRETE SLAB, BEAM OR WALL
WITH (1) DEWALT/POWERS POWER-STUD+ SD2 CONCRETE ANCHOR

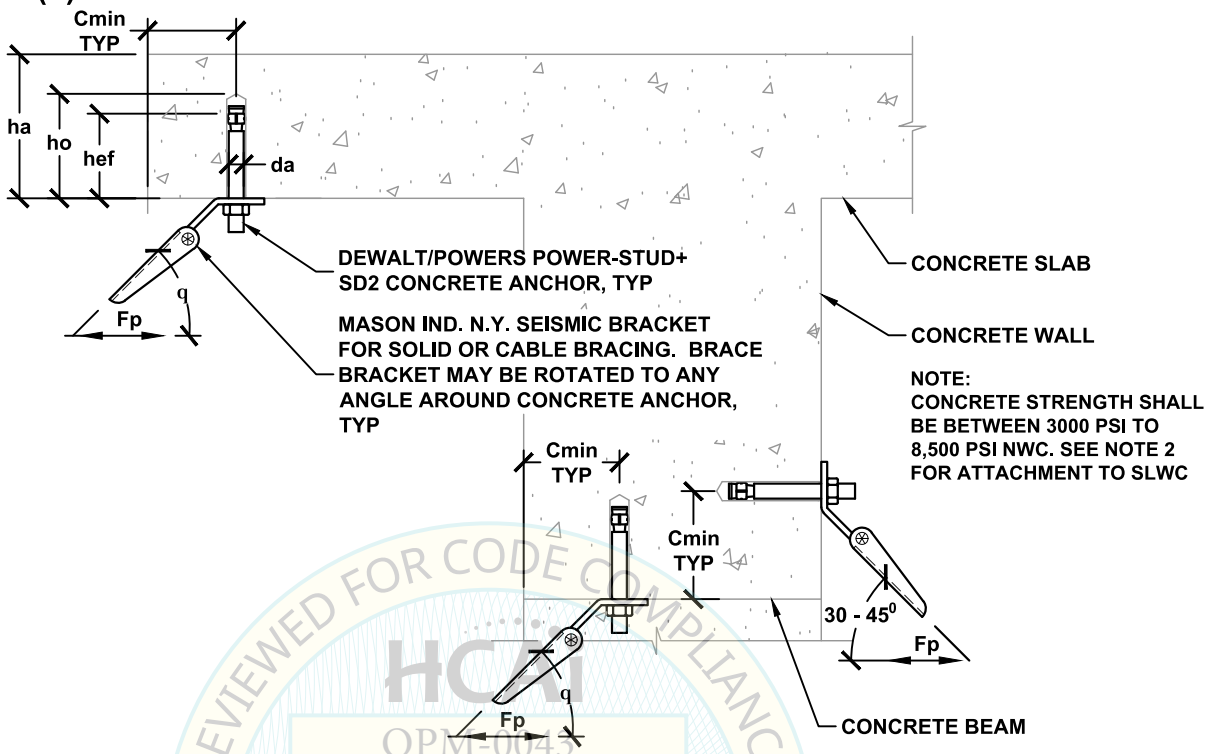

REVIEWED FOR CODE COMPLIANCE
HCAI
OPM-0043
BY: William Staehlin
DATE: 01/23/2023
CALIFORNIA BUILDING CODE, 2022

BRACE BRACKET ATTACHMENT TYPE	ALLOWABLE LATERAL LOAD Fp^2 LBS	$\Omega_0 = 2.0^1$ BRACE BRACKET ATTACHMENT TYPE	$\Omega_0 = 2.0^1$ ALLOWABLE LATERAL LOAD Fp^2 LBS	MAX BRACE RANGE q	DEWALT/POWERS POWER-STUD+ SD2 CONCRETE ANCHOR (ICC ESR-2502) SPECIAL INSPECTION REQ'D DIA. da INCH	MIN. EFF. EMBED. hef INCH	MIN. HOLE DEPTH ho INCH	MIN. BASE TH. ha INCH	MIN. EDGE Cmin INCH	MIN. SPACING Smin INCH	TORQUE REQ'D FT-LBS
38A TO 38D	330	38A TO 38D	330	30°- 45°	⅜	2	2⅝	4	4½	6	20
38A TO 38C	200	38A TO 38C	200	46°- 60°							
50A TO 50E	370	50A TO 50E	370	30°- 45°	½	2	2¾	4½	4½	6	40
50A TO 50C	220	50A TO 50C	220	46°- 60°							
50A TO 50G	670	50A TO 50G	670	30°- 45°	½	3¼	4	6	6	9¾	40
50A TO 50E	400	50A TO 50E	400	46°- 60°							
63A TO 63H	790	63A TO 63H	790	30°- 45°	⅝	3¼	4¼	6	6	9¾	60
63A TO 63F	470	63A TO 63F	470	46°- 60°							
63A TO 63K	1080	63A TO 63K	1050	30°- 45°	⅝	4¼	5¼	6½	12	12¾	60
63A TO 63G	660	63A TO 63G	660	46°- 60°							
75A TO 75J	980	75A TO 75J	980	30°- 45°	¾	3¾	5	7	12	11¼	110
75A TO 75G	580	75A TO 75G	580	46°- 60°							

SEE DETAIL N0.00 FOR SECTION NOTES
[1] OVERSTRENGTH FACTOR AS REQUIRED FOR ANCHORAGE TO CONCRETE.
[2] FOR SLWC SLAB AND BEAM, REDUCE ALLOWABLE LATERAL LOAD BY MULTIPLYING ALLOWABLE LOAD BY A FACTOR OF 0.68.
[3] EDGE DISTANCE PERPENDICULAR TO Cmin SHALL BE 1.5*Cmin, MINIMUM.

MASON WEST
1601 E. Miraloma Ave. Placentia, CA 92870
TEL (714) 630 - 0701, www.masonwest.com

Jiefu "Jeff" Zhang, SE
California SE No. S5270

PAGE
N1.60

SEISMIC BRACKET ATTACHMENT
TO CONCRETE SLAB, BEAM OR WALL
WITH (2) DEWALT/POWERS POWER-STUD+ SD2 CONCRETE ANCHORS

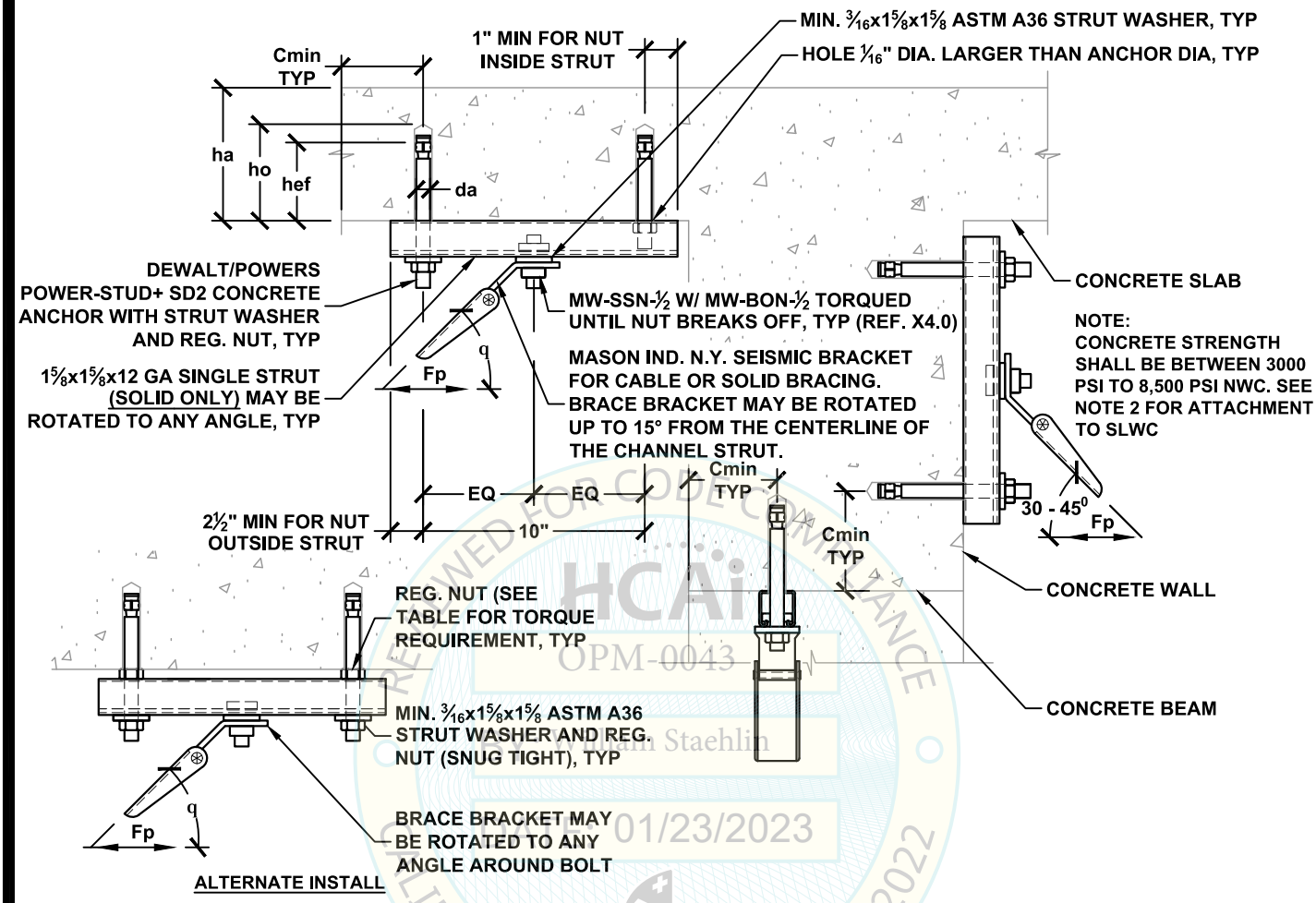

BRACE BRACKET ATTACHMENT TYPE	ALLOWABLE LATERAL LOAD Fp^2 LBS	$\Omega_0 = 2.0^1$ BRACE BRACKET ATTACHMENT TYPE	ALLOWABLE LATERAL LOAD Fp^2 LBS	MAX BRACE RANGE q	DEWALT/POWERS POWER-STUD+ SD2 CONCRETE ANCHOR (ICC ESR-2502) SPECIAL INSPECTION REQ'D DIA. da INCH	MIN. EFF. EMBED. hef INCH	MIN. HOLE DEPTH ho INCH	MIN. BASE TH. ha INCH	MIN. EDGE Cmin INCH	MIN. SPACING Smin INCH	TORQUE REQ'D FT-LBS
50A TO 50G	620	50A TO 50F	520	30°- 45°	3/8	2	2 5/8	4	4 1/2	6	20
50A TO 50F	530	50A TO 50E	390	46°- 60°							
50A TO 50G	620	50A TO 50G	590	30°- 45°	1/2	2	2 3/4	4 1/2	4 1/2	6	40
50A TO 50F	530	50A TO 50E	440	46°- 60°							

SEE DETAIL N0.00 FOR SECTION NOTES
[1] OVERSTRENGTH FACTOR AS REQUIRED FOR ANCHORAGE TO CONCRETE.
[2] FOR SLWC SLAB AND BEAM, REDUCE ALLOWABLE LATERAL LOAD BY MULTIPLYING ALLOWABLE LOAD BY A FACTOR OF 0.68.
[3] EDGE DISTANCE PERPENDICULAR TO Cmin SHALL BE 1.5*Cmin, MINIMUM.

MASON WEST
1601 E. Miraloma Ave. Placentia, CA 92870
TEL (714) 630 - 0701, www.masonwest.com

Jiefu "Jeff" Zhang, SE
California SE No. S5270

PAGE
N1.61

REVIEWED FOR CODE COMPLIANCE CALIFORNIA BUILDING CODE 2022
HCAi
OPM-0043
William Staehlin
01/23/2023

SEISMIC BRACKET ATTACHMENT
TO CONCRETE SLAB, BEAM OR WALL
WITH (2) DEWALT/POWERS POWER-STUD+ SD2 CONCRETE ANCHORS

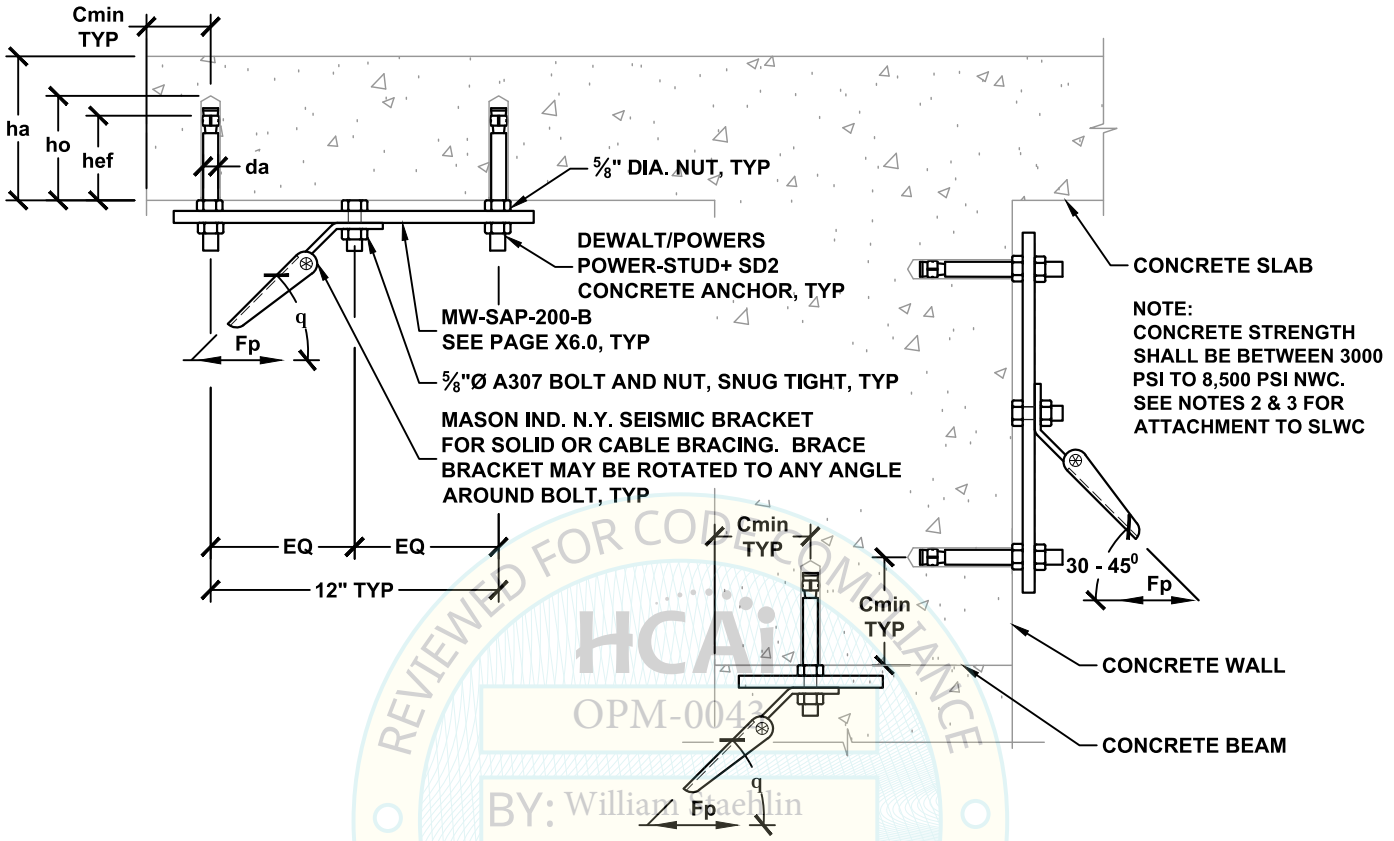

REVIEWED FOR CODE COMPLIANCE
HCAi
OPM-0043
BY: William Staehlin
DATE: 01/23/2023
CALIFORNIA BUILDING CODE 2022

BRACE BRACKET ATTACHMENT TYPE	ALLOWABLE LATERAL LOAD Fp^2 LBS	$\Omega_0 = 2.0^1$ BRACE BRACKET ATTACHMENT TYPE	ALLOWABLE LATERAL LOAD Fp^3 LBS	MAX BRACE RANGE q	DEWALT/POWERS POWER-STUD+ SD2 CONCRETE ANCHOR (ICC ESR-2502) SPECIAL INSPECTION REQ'D DIA. da INCH	MIN. EFF. EMBED. hef INCH	MIN. HOLE DEPTH ho INCH	MIN. BASE TH. ha INCH	MIN. EDGE Cmin INCH	MIN. SPACING Smin INCH	TORQUE REQ'D FT-LBS
63A TO 63M	1930	63A TO 63M	1650	30°- 45°	5/8	3¼	4¼	6	6	9¾	60
63A TO 63K	1110	63A TO 63K	1110	46°- 60°							

SEE DETAIL N0.00 FOR SECTION NOTES

[1] OVERSTRENGTH FACTOR AS REQUIRED FOR ANCHORAGE TO CONCRETE.

[2] FOR BRACE BRACKET ATTACHMENTS WITHOUT OVERSTRENGTH FACTOR TO SLWC SLAB AND BEAM, THE ALLOWABLE LATERAL LOAD SHALL BE TAKEN AS 1870 LBS FOR 30°-45° MAX BRACE RANGE.

[3] FOR BRACE BRACKET ATTACHMENTS WITH OVERSTRENGTH FACTOR TO SLWC SLAB AND BEAM, REDUCE ALLOWABLE LATERAL LOAD BY MULTIPLYING ALLOWABLE LOAD BY A FACTOR OF 0.68.

[4] EDGE DISTANCE PERPENDICULAR TO Cmin SHALL BE 1.5*Cmin, MINIMUM.

MASON WEST
1601 E. Miraloma Ave. Placentia, CA 92870
TEL (714) 630 - 0701, www.masonwest.com

Jiefu "Jeff" Zhang, SE
California SE No. S5270

PAGE
N1.62

SEISMIC BRACKET ATTACHMENT
TO CONCRETE SLAB, BEAM OR WALL
WITH (4) DEWALT/POWERS POWER-STUD+ SD2 CONCRETE ANCHORS

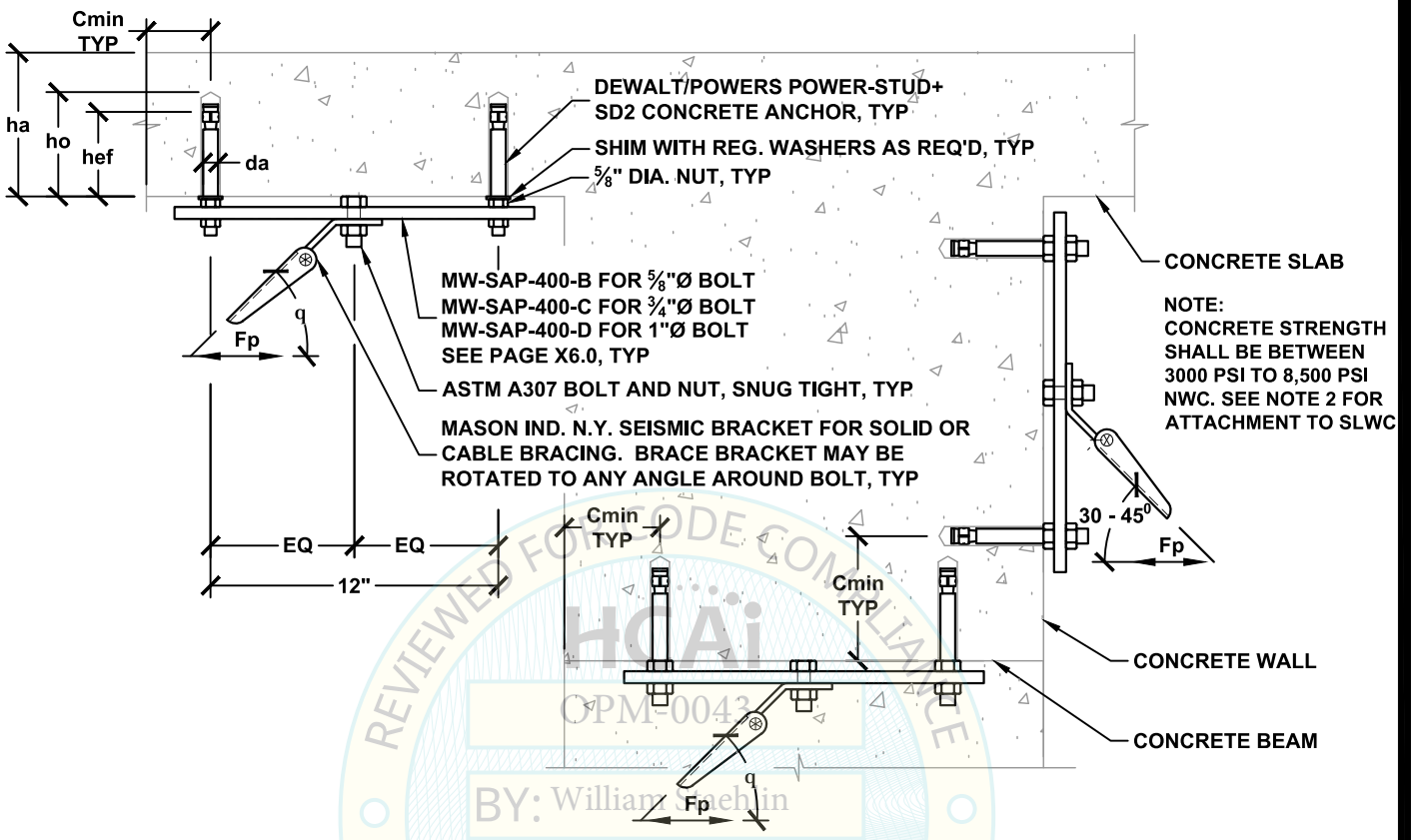

HCAi
OPM-0043
BY: William Staehlin
DATE: 01/23/2023
REVIEWED FOR CODE COMPLIANCE
CALIFORNIA BUILDING CODE, 2022

BRACE BRACKET ATTACHMENT TYPE	ALLOWABLE LATERAL LOAD Fp^2 LBS	$\Omega_0 = 2.0^1$ BRACE BRACKET ATTACHMENT TYPE	$\Omega_0 = 2.0^1$ ALLOWABLE LATERAL LOAD Fp^2 LBS	MAX BRACE RANGE q	BOLT DIA. INCH	DEWALT/POWERS POWER-STUD+ SD2 CONCRETE ANCHOR (ICC ESR-2502) SPECIAL INSPECTION REQ'D DIA. da INCH	MIN. EFF. EMBED. hef INCH	MIN. HOLE DEPTH ho INCH	MIN. BASE TH. ha INCH	MIN. EDGE Cmin INCH	MIN. SPACING Smin INCH	TORQUE REQ'D FT-LBS
63A TO 63P	3080	63A TO 63P	3080	30°- 45°	5/8	5/8	3 1/4	4 1/4	6	6	9 3/4	60
63A TO 63N	2080	63A TO 63N	2080	46°- 60°	5/8							
75A TO 75Q	3500	75A TO 75P	3290	30°- 45°	3/4							
75A TO 75N	2020	75A TO 75N	2020	46°- 60°	3/4							
100A TO 100Q	3500	100A TO 100P	3290	30°- 45°	1							
100A TO 100N	2020	100A TO 100N	2020	46°- 60°	1							

SEE DETAIL N0.00 FOR SECTION NOTES

[1] OVERSTRENGTH FACTOR AS REQUIRED FOR ANCHORAGE TO CONCRETE.

[2] FOR BRACE BRACKET ATTACHMENTS WITH OVERSTRENGTH FACTOR TO SLWC SLAB AND BEAM, REDUCE ALLOWABLE LATERAL LOAD BY MULTIPLYING ALLOWABLE LOAD BY A FACTOR OF 0.68.

[3] EDGE DISTANCE PERPENDICULAR TO Cmin SHALL BE 1.5*Cmin, MINIMUM.

MASON WEST
1601 E. Miraloma Ave. Placentia, CA 92870
TEL (714) 630 - 0701, www.masonwest.com

Jiefu "Jeff" Zhang, SE
California SE No. S5270

PAGE
N1.63

SEISMIC BRACKET ATTACHMENT TO CONCRETE SLAB, BEAM OR WALL WITH (1) CONCRETE SCREW ANCHOR

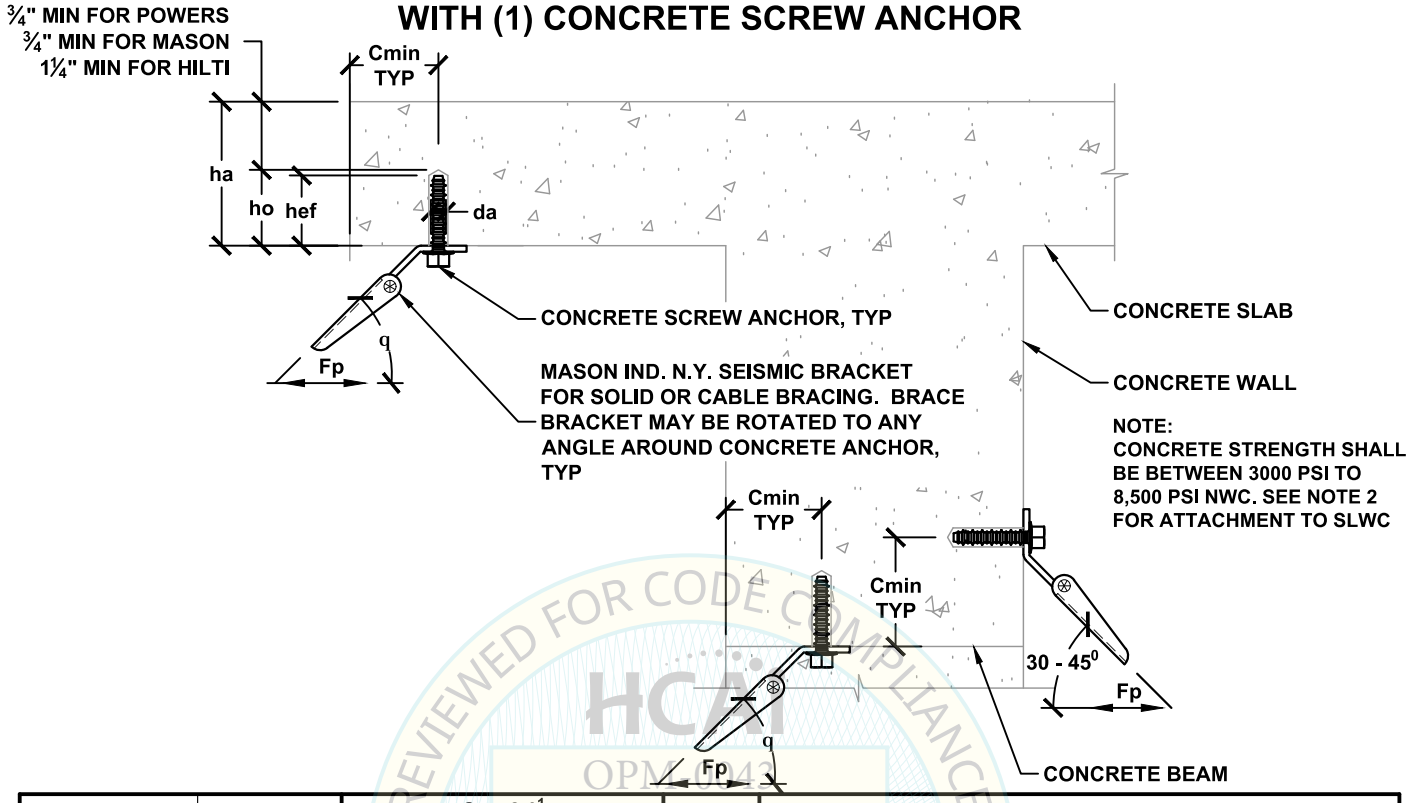

BRACE BRACKET ATTACHMENT TYPE	ALLOWABLE LATERAL LOAD Fp^2 LBS	$\Omega_0 = 2.0^1$ BRACE BRACKET ATTACHMENT TYPE	$\Omega_0 = 2.0^1$ ALLOWABLE LATERAL LOAD Fp^2 LBS	MAX BRACE RANGE q	DEWALT/POWERS SCREW-BOLT+ CONCRETE SCREW ANCHOR (ICC ESR-3889) SPECIAL INSPECTION REQ'D DIA. da INCH	MIN. EFF. EMBED. hef INCH	MIN. HOLE DEPTH ho INCH	MIN. BASE TH. ha INCH	MIN. EDGE Cmin INCH	MIN. SPACING Smin INCH	MAX INSTALL. TORQUE FT-LBS
38A TO 38E	410	38A TO 38E	410	30°- 45°	⅜	2½	3⅝	5	3¾	7½	40
38A TO 38D	250	38A TO 38D	250	46°- 60°							
50A TO 50E	380	50A TO 50E	380	30°- 45°	½	2¼	3⅜	5¼	3⅜	6¾	45
50A TO 50C	230	50A TO 50C	230	46°- 60°							
50A TO 50H	720	50A TO 50H	720	30°- 45°	½	3¼	4⅝	6¾	4⅞	9¾	60
50A TO 50E	430	50A TO 50E	430	46°- 60°							
63A TO 63E	420	63A TO 63E	420	30°- 45°	⅝	2⅞	4⅜	6	4 5/16	8⅝	60
63A TO 63C	240	63A TO 63C	240	46°- 60°							
63A TO 63G	580	63A TO 63G	580	30°- 45°	⅝	3¾	5⅜	7	5⅝	11¼	60
63A TO 63D	330	63A TO 63D	330	46°- 60°							
75A TO 75G	640	75A TO 75G	640	30°- 45°	¾	3⅛	4⅝	6	4 11/16	9⅜	70
75A TO 75E	380	75A TO 75E	380	46°- 60°							

SEE DETAIL N0.00 FOR SECTION NOTES

[1] OVERSTRENGTH FACTOR AS REQUIRED FOR ANCHORAGE TO CONCRETE.

[2] FOR SLWC SLAB AND BEAM, REDUCE ALLOWABLE LATERAL LOAD BY MULTIPLYING ALLOWABLE LOAD BY A FACTOR OF 0.68.

[3] EDGE DISTANCE PERPENDICULAR TO Cmin SHALL BE 1.5*Cmin, MINIMUM.

[4] SEE PAGE N1.70.1 FOR ADDITIONAL ALLOWABLE LOAD TABLES.

MASON WEST
1601 E. Miraloma Ave. Placentia, CA 92870
TEL (714) 630 - 0701, www.masonwest.com

Jiefu "Jeff" Zhang, SE
California SE No. S5270

PAGE
N1.70

REVIEWED FOR CODE COMPLIANCE
HCAI
OPM-0043
BY: William Staehlin
DATE: 01/23/2023
CALIFORNIA BUILDING CODE, 2022

SEISMIC BRACKET ATTACHMENT TO CONCRETE SLAB, BEAM OR WALL WITH (1) CONCRETE SCREW ANCHOR

BRACE BRACKET ATTACHMENT TYPE	ALLOWABLE LATERAL LOAD F_p^2 LBS	$\Omega_0 = 2.0^1$ BRACE BRACKET ATTACHMENT TYPE	$\Omega_0 = 2.0^1$ ALLOWABLE LATERAL LOAD F_p^2 LBS	MAX BRACE RANGE q	MASON IND. N.Y. SAST CONCRETE SCREW ANCHOR (ICC ESR-2713) SPECIAL INSPECTION REQ'D DIA. da INCH	MIN. EFF. EMBED. hef INCH	MIN. HOLE DEPTH ho INCH	MIN. BASE TH. ha INCH	MIN. EDGE Cmin INCH	MIN. SPACING Smin INCH	MAX INSTALL. TORQUE FT-LBS
38A TO 38C	200	38A TO 38C	200	30°- 45°	3/8	1 7/8	2 3/4	4	2 13/16	5 5/8	50
38A TO 38A	120	38A TO 38A	120	46°- 60°							
50A TO 50F	450	50A TO 50F	450	30°- 45°	1/2	2 3/8	3 3/4	5	3 9/16	7 1/8	65
50A TO 50D	280	50A TO 50D	280	46°- 60°							
50A TO 50G	650	50A TO 50G	650	30°- 45°	1/2	3	4 1/2	6 1/4	4 1/2	9	65
50A TO 50E	400	50A TO 50E	400	46°- 60°							
63A TO 63F	500	63A TO 63F	500	30°- 45°	5/8	3	4 1/2	6	4 1/2	9	100
63A TO 63D	290	63A TO 63D	290	46°- 60°							
63A TO 63J	890	63A TO 63J	890	30°- 45°	5/8	4 1/4	6	8 1/2	6 3/8	12 3/4	100
63A TO 63F	520	63A TO 63F	520	46°- 60°							
75A TO 75J	980	75A TO 75J	980	30°- 45°	3/4	4 1/4	6	8 3/4	6 3/8	12 3/4	150
75A TO 75F	570	75A TO 75F	570	46°- 60°							

BRACE BRACKET ATTACHMENT TYPE	ALLOWABLE LATERAL LOAD F_p^2 LBS	$\Omega_0 = 2.0^1$ BRACE BRACKET ATTACHMENT TYPE	$\Omega_0 = 2.0^1$ ALLOWABLE LATERAL LOAD F_p^2 LBS	MAX BRACE RANGE q	HILTI KH-EZ CONCRETE SCREW ANCHOR (ICC ESR-3027) SPECIAL INSPECTION REQ'D DIA. da INCH	MIN. EFF. EMBED. hef INCH	MIN. HOLE DEPTH ho INCH	MIN. BASE TH. ha INCH	MIN. EDGE Cmin INCH	MIN. SPACING Smin INCH	MAX INSTALL. TORQUE FT-LBS
38A TO 38A	110	38A TO 38A	110	30°- 45°	3/8	1 1/8	1 7/8	3 1/4	1 11/16	3 3/8	19
38A TO 38A	70	38A TO 38A	70	46°- 60°							
38A TO 38D	310	38A TO 38D	300	30°- 45°	3/8	1 7/8	2 3/4	4	2 13/16	5 5/8	40
38A TO 38C	190	38A TO 38C	190	46°- 60°							
50A TO 50E	400	50A TO 50E	400	30°- 45°	1/2	2 1/4	3 3/8	4 3/4	3 3/8	6 3/4	45
50A TO 50C	240	50A TO 50C	240	46°- 60°							
63A TO 63F	470	63A TO 63F	470	30°- 45°	5/8	2 1/2	3 5/8	5	3 3/4	7 1/2	85
63A TO 63D	290	63A TO 63D	290	46°- 60°							
63A TO 63J	950	63A TO 63J	940	30°- 45°	5/8	3 7/8	5 3/8	7	5 13/16	11 5/8	85
63A TO 63G	580	63A TO 63G	580	46°- 60°							
75A TO 75G	650	75A TO 75G	650	30°- 45°	3/4	3	4 3/8	6	4 1/2	9	115
75A TO 75E	390	75A TO 75E	390	46°- 60°							

SEE DETAIL N0.00 FOR SECTION NOTES

[1] OVERSTRENGTH FACTOR AS REQUIRED FOR ANCHORAGE TO CONCRETE.

[2] FOR SLWC SLAB AND BEAM, REDUCE ALLOWABLE LATERAL LOAD BY MULTIPLYING ALLOWABLE LOAD BY A FACTOR OF 0.68.

[3] EDGE DISTANCE PERPENDICULAR TO Cmin SHALL BE 1.5*Cmin, MINIMUM.

REVIEWED FOR CODE COMPLIANCE
OSHPD
OPM-0043
BY: William Staehlin
DATE: 1/23/2023
CALIFORNIA BUILDING CODE 2022

MASON WEST
1601 E. Miraloma Ave. Placentia, CA 92870
TEL (714) 630 - 0701, www.masonwest.com

Jiefu "Jeff" Zhang, SE
California SE No. S5270

PAGE
N1.70.1

SEISMIC BRACKET ATTACHMENT TO CONCRETE SLAB, BEAM OR WALL WITH (2) CONCRETE SCREW ANCHOR

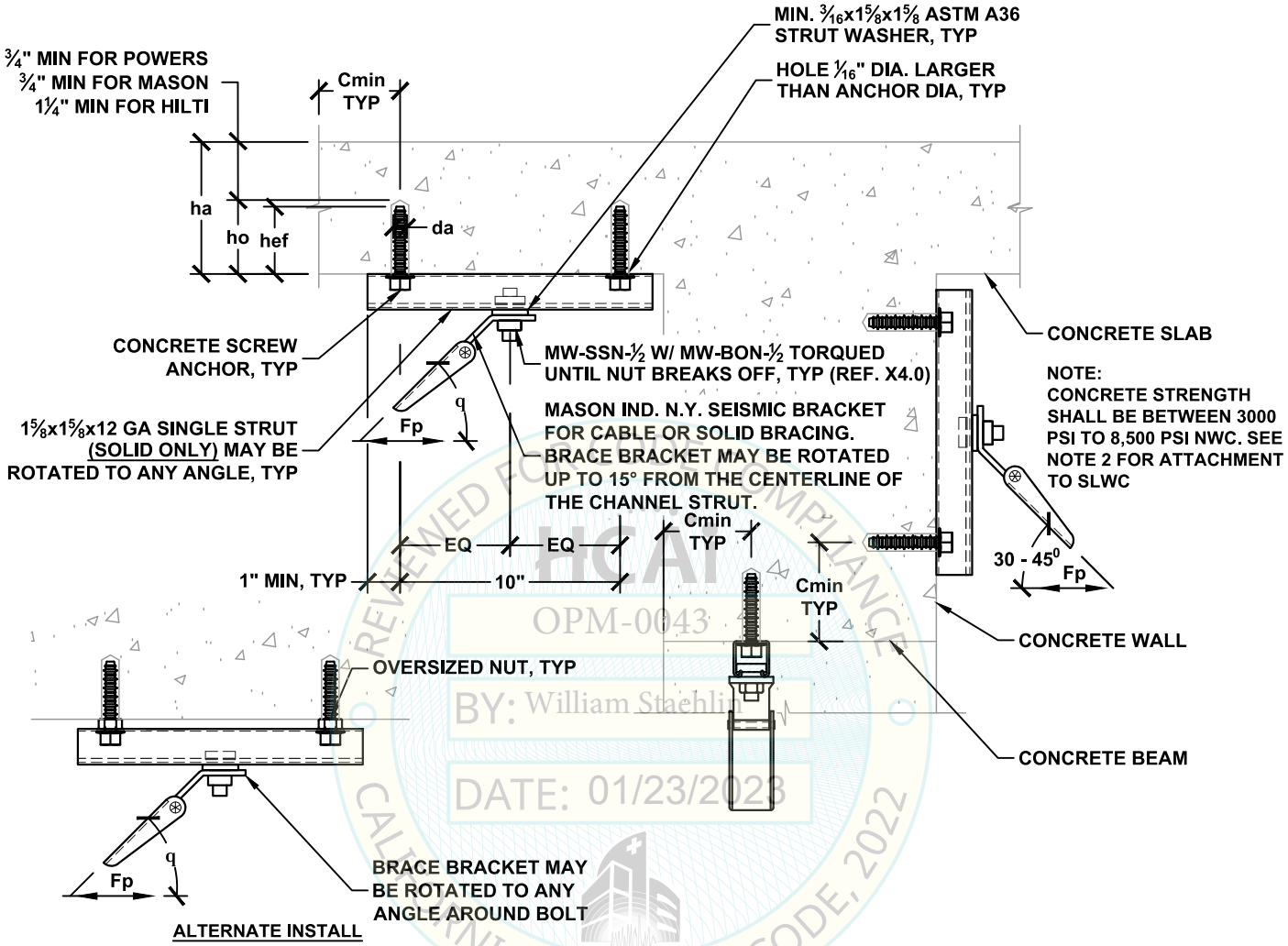

REVIEWED FOR CODE COMPLIANCE
HCAI
OPM-0043
BY: William Staehlin
DATE: 01/23/2023
CALIFORNIA BUILDING CODE, 2022

[1] SEE PAGE N1.71.1 FOR ALLOWABLE LOAD TABLES.

MASON WEST
1601 E. Miraloma Ave. Placentia, CA 92870
TEL (714) 630 - 0701, www.masonwest.com

Jiefu "Jeff" Zhang, SE
California SE No. S5270

PAGE
N1.71

SEISMIC BRACKET ATTACHMENT TO CONCRETE SLAB, BEAM OR WALL WITH (2) CONCRETE SCREW ANCHOR

BRACE BRACKET ATTACHMENT TYPE	ALLOWABLE LATERAL LOAD F_p^2 LBS	$\Omega_0 = 2.0^1$ BRACE BRACKET ATTACHMENT TYPE	$\Omega_0 = 2.0^1$ ALLOWABLE LATERAL LOAD F_p^2 LBS	MAX BRACE RANGE q	DEWALT/POWERS SCREW-BOLT+ CONCRETE SCREW ANCHOR (ICC ESR-3889) SPECIAL INSPECTION REQ'D						
					DIA. da INCH	MIN. EFF. EMBED. hef INCH	MIN. HOLE DEPTH ho INCH	MIN. BASE TH. ha INCH	MIN. EDGE Cmin INCH	MIN. SPACING Smin INCH	MAX INSTALL. TORQUE FT-LBS
50A TO 50G	620	50A TO 50G	620	30°- 45°	3/8	2 1/2	3 5/8	5	3 3/4	7 1/2	40
50A TO 50F	530	50A TO 50F	490	46°- 60°							
50A TO 50G	620	50A TO 50G	600	30°- 45°	1/2	2 1/4	3 3/8	5 1/4	3 3/8	6 3/4	45
50A TO 50F	530	50A TO 50F	450	46°- 60°							
50A TO 50G	620	50A TO 50G	620	30°- 45°	1/2	3 1/4	4 5/8	6 3/4	4 7/8	9 3/4	60
50A TO 50F	530	50A TO 50F	530	46°- 60°							

BRACE BRACKET ATTACHMENT TYPE	ALLOWABLE LATERAL LOAD F_p^2 LBS	$\Omega_0 = 2.0^1$ BRACE BRACKET ATTACHMENT TYPE	$\Omega_0 = 2.0^1$ ALLOWABLE LATERAL LOAD F_p^2 LBS	MAX BRACE RANGE q	MASON IND. N.Y. SAST CONCRETE SCREW ANCHOR (ICC ESR-2713) SPECIAL INSPECTION REQ'D						
					DIA. da INCH	MIN. EFF. EMBED. hef INCH	MIN. HOLE DEPTH ho INCH	MIN. BASE TH. ha INCH	MIN. EDGE Cmin INCH	MIN. SPACING Smin INCH	MAX INSTALL. TORQUE FT-LBS
50A TO 50F	530	50A TO 50D	320	30°- 45°	3/8	1 7/8	2 3/4	4	2 13/16	5 5/8	50
50A TO 50E	390	50A TO 50C	230	46°- 60°							
50A TO 50G	620	50A TO 50G	620	30°- 45°	1/2	2 3/8	3 3/4	5	3 9/16	7 1/8	65
50A TO 50F	530	50A TO 50F	530	46°- 60°							
50A TO 50G	620	50A TO 50G	620	30°- 45°	1/2	3	4 1/2	6 1/4	4 1/2	9	65
50A TO 50F	530	50A TO 50F	530	46°- 60°							

BRACE BRACKET ATTACHMENT TYPE	ALLOWABLE LATERAL LOAD F_p^2 LBS	$\Omega_0 = 2.0^1$ BRACE BRACKET ATTACHMENT TYPE	$\Omega_0 = 2.0^1$ ALLOWABLE LATERAL LOAD F_p^2 LBS	MAX BRACE RANGE q	HILTI KH-EZ CONCRETE SCREW ANCHOR (ICC ESR-3027) SPECIAL INSPECTION REQ'D						
					DIA. da INCH	MIN. EFF. EMBED. hef INCH	MIN. HOLE DEPTH ho INCH	MIN. BASE TH. ha INCH	MIN. EDGE Cmin INCH	MIN. SPACING Smin INCH	MAX INSTALL. TORQUE FT-LBS
50A TO 50D	290	50A TO 50B	170	30°- 45°	3/8	1 1/8	1 7/8	3 1/4	1 11/16	3 3/8	19
50A TO 50C	220	50A TO 50B	130	46°- 60°							
50A TO 50G	620	50A TO 50F	480	30°- 45°	3/8	1 7/8	2 3/4	4	2 13/16	5 5/8	40
50A TO 50F	530	50A TO 50E	370	46°- 60°							
50A TO 50G	620	50A TO 50G	620	30°- 45°	1/2	2 1/4	3 3/8	4 3/4	3 3/8	6 3/4	45
50A TO 50F	530	50A TO 50F	470	46°- 60°							

SEE DETAIL N0.00 FOR SECTION NOTES

[1] OVERSTRENGTH FACTOR AS REQUIRED FOR ANCHORAGE TO CONCRETE.

[2] FOR SLWC SLAB AND BEAM, REDUCE ALLOWABLE LATERAL LOAD BY MULTIPLYING ALLOWABLE LOAD BY A FACTOR OF 0.68.

[3] EDGE DISTANCE PERPENDICULAR TO Cmin SHALL BE 1.5*Cmin, MINIMUM.

MASON WEST
1601 E. Miraloma Ave. Placentia, CA 92870
TEL (714) 630 - 0701, www.masonwest.com

Jiefu "Jeff" Zhang, SE
California SE No. S5270

PAGE
N1.71.1

REVIEWED FOR CODE COMPLIANCE
OPM-0043
BY: William Staehlin
DATE: 01/23/2023
CALIFORNIA BUILDING CODE 2022

SEISMIC BRACKET ATTACHMENT TO CONCRETE SLAB, BEAM OR WALL WITH (2) CONCRETE SCREW ANCHORS

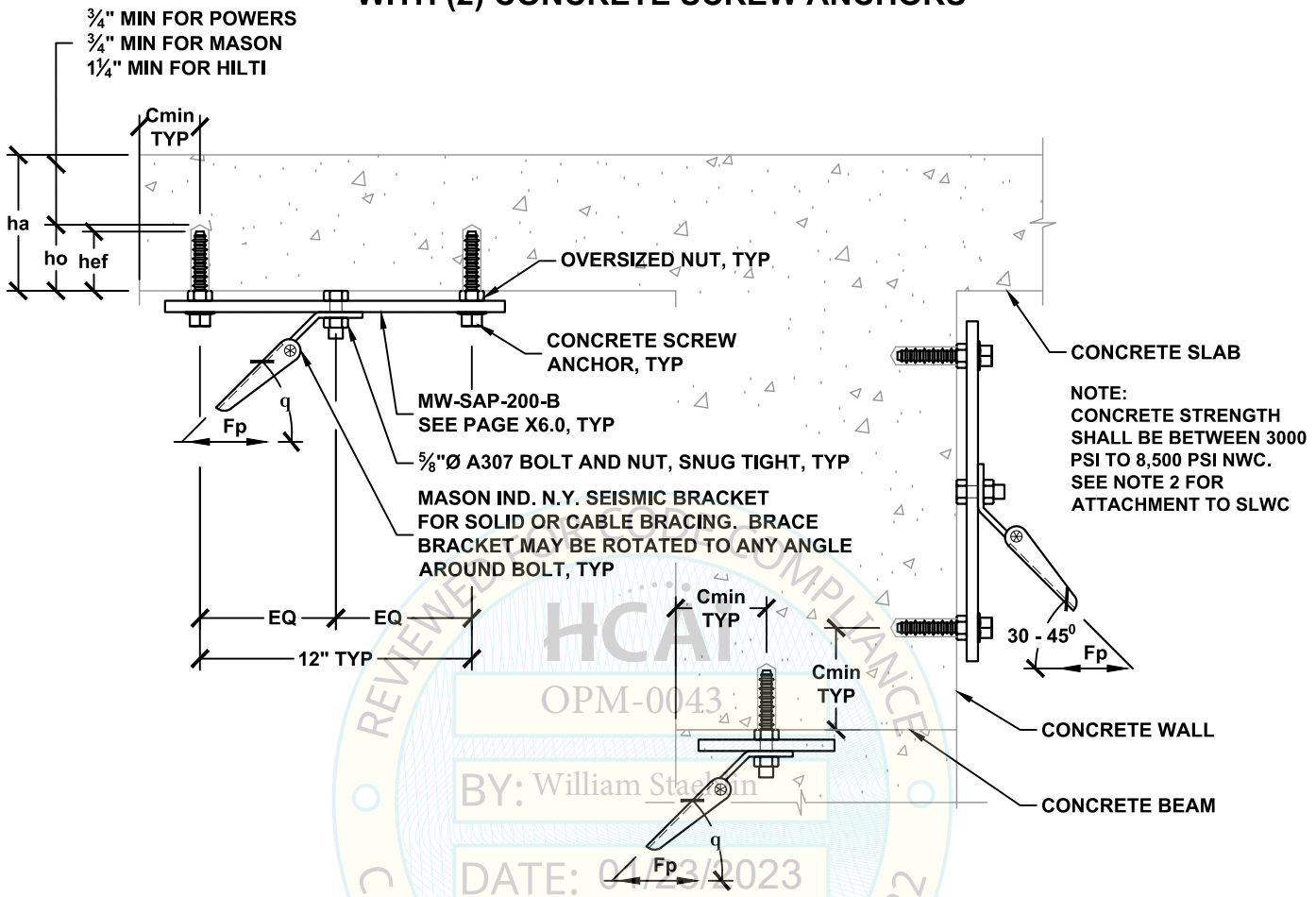

HCAI
OPM-0043
BY: William Staehlin
DATE: 01/23/2023
REVIEWED FOR CODE COMPLIANCE
CALIFORNIA BUILDING CODE 2022

BRACE BRACKET ATTACHMENT TYPE	ALLOWABLE LATERAL LOAD Fp^2 LBS	$\Omega_0 = 2.0^1$ BRACE BRACKET ATTACHMENT TYPE	ALLOWABLE LATERAL LOAD Fp^2 LBS	MAX BRACE RANGE q	DEWALT/POWERS SCREW-BOLT+ CONCRETE SCREW ANCHOR (ICC ESR-3889) SPECIAL INSPECTION REQ'D DIA. da INCH	MIN. EFF. EMBED. hef INCH	MIN. HOLE DEPTH ho INCH	MIN. BASE TH. ha INCH	MIN. EDGE Cmin INCH	MIN. SPACING Smin INCH	MAX INSTALL. TORQUE FT-LBS
63A TO 63L	1530	63A TO 63J	920	30°- 45°	⅝	2⅞	4⅜	6	4 5/16	8⅝	60
63A TO 63K	1010	63A TO 63G	610	46°- 60°							
63A TO 63M	1930	63A TO 63L	1290	30°- 45°	⅝	3¾	5⅜	7	5⅝	11¼	60
63A TO 63K	1110	63A TO 63J	850	46°- 60°							

SEE DETAIL N0.00 FOR SECTION NOTES
[1] OVERSTRENGTH FACTOR AS REQUIRED FOR ANCHORAGE TO CONCRETE.
[2] FOR SLWC SLAB AND BEAM, REDUCE ALLOWABLE LATERAL LOAD BY MULTIPLYING ALLOWABLE LOAD BY A FACTOR OF 0.68.
[3] EDGE DISTANCE PERPENDICULAR TO Cmin SHALL BE 1.5*Cmin, MINIMUM.
[4] SEE PAGE N1.72.1 FOR ADDITIONAL ALLOWABLE LOAD TABLES.

MASON WEST
1601 E. Miraloma Ave. Placentia, CA 92870
TEL (714) 630 - 0701, www.masonwest.com

Jiefu "Jeff" Zhang, SE
California SE No. S5270

SEISMIC BRACKET ATTACHMENT TO CONCRETE SLAB, BEAM OR WALL WITH (2) CONCRETE SCREW ANCHORS

BRACE BRACKET ATTACHMENT TYPE	ALLOWABLE LATERAL LOAD F_p^2 LBS	$\Omega_0 = 2.0^1$ BRACE BRACKET ATTACHMENT TYPE	$\Omega_0 = 2.0^1$ ALLOWABLE LATERAL LOAD F_p^2 LBS	MAX BRACE RANGE q	MASON IND. N.Y. SAST CONCRETE SCREW ANCHOR (ICC ESR-2713) SPECIAL INSPECTION REQ'D DIA. da INCH	MIN. EFF. EMBED. hef INCH	MIN. HOLE DEPTH ho INCH	MIN. BASE TH. ha INCH	MIN. EDGE Cmin INCH	MIN. SPACING Smin INCH	MAX INSTALL. TORQUE FT-LBS
63A TO 63M	1790	63A TO 63K	1070	30°- 45°	5/8	3	4 1/2	6	4 1/2	9	100
63A TO 63K	1110	63A TO 63H	720	46°- 60°							
63A TO 63M	1930	63A TO 63M	1850	30°- 45°	5/8	4 1/4	6	8 1/2	6 3/8	12 3/4	100
63A TO 63K	1110	63A TO 63K	1110	46°- 60°							

BRACE BRACKET ATTACHMENT TYPE	ALLOWABLE LATERAL LOAD F_p^2 LBS	$\Omega_0 = 2.0^1$ BRACE BRACKET ATTACHMENT TYPE	$\Omega_0 = 2.0^1$ ALLOWABLE LATERAL LOAD F_p^2 LBS	MAX BRACE RANGE q	HILTI KH-EZ CONCRETE SCREW ANCHOR (ICC ESR-3027) SPECIAL INSPECTION REQ'D DIA. da INCH	MIN. EFF. EMBED. hef INCH	MIN. HOLE DEPTH ho INCH	MIN. BASE TH. ha INCH	MIN. EDGE Cmin INCH	MIN. SPACING Smin INCH	MAX INSTALL. TORQUE FT-LBS
63A TO 63L	1590	63A TO 63J	960	30°- 45°	5/8	2 1/2	3 5/8	5	3 3/4	7 1/2	85
63A TO 63K	1110	63A TO 63G	680	46°- 60°							
63A TO 63M	1930	63A TO 63M	1880	30°- 45°	5/8	3 7/8	5 3/8	7	5 13/16	11 5/8	85
63A TO 63K	1110	63A TO 63K	1110	46°- 60°							

SEE DETAIL N0.00 FOR SECTION NOTES

[1] OVERSTRENGTH FACTOR AS REQUIRED FOR ANCHORAGE TO CONCRETE.

[2] FOR SLWC SLAB AND BEAM, REDUCE ALLOWABLE LATERAL LOAD BY MULTIPLYING ALLOWABLE LOAD BY A FACTOR OF 0.68.

[3] EDGE DISTANCE PERPENDICULAR TO Cmin SHALL BE 1.5*Cmin, MINIMUM.

REVIEWED FOR CODE COMPLIANCE HCAi OPM-0043 BY: William Staehlin DATE: 01/23/2023 CALIFORNIA BUILDING CODE 2022

MASON WEST
1601 E. Miraloma Ave. Placentia, CA 92870
TEL (714) 630 - 0701, www.masonwest.com

Jiefu "Jeff" Zhang, SE
California SE No. S5270

SEISMIC BRACKET ATTACHMENT TO CONCRETE SLAB, BEAM OR WALL WITH (4) CONCRETE SCREW ANCHORS

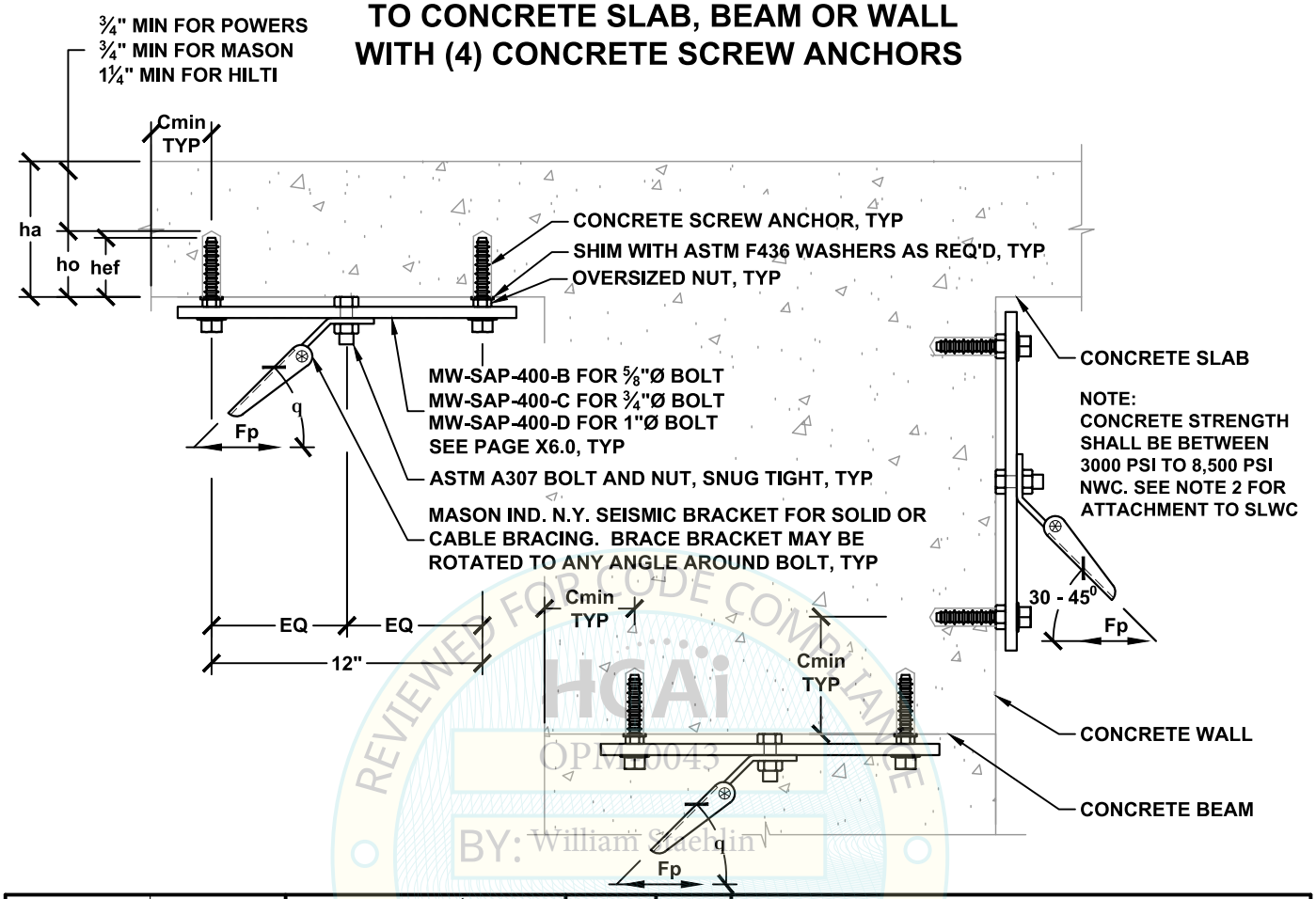

REVIEWED FOR CODE COMPLIANCE
HCAi
OPM-0043
BY: William Staehlin
DATE: 01/23/2023
CALIFORNIA BUILDING CODE 2022

BRACE BRACKET ATTACHMENT TYPE	ALLOWABLE LATERAL LOAD Fp^2 LBS	BRACE BRACKET ATTACHMENT TYPE	ALLOWABLE LATERAL LOAD Fp^2 LBS	MAX BRACE RANGE q	BOLT DIA. INCH	DEWALT/POWERS SCREW-BOLT+ CONCRETE SCREW ANCHOR (ICC ESR-3889) SPECIAL INSPECTION REQ'D						
		$\Omega_0 = 2.0^1$				DIA. da INCH	MIN. EFF. EMBED. hef INCH	MIN. HOLE DEPTH ho INCH	MIN. BASE TH. ha INCH	MIN. EDGE Cmin INCH	MIN. SPACING Smin INCH	MAX INSTALL. TORQUE FT-LBS
63A TO 63P	3060	63A TO 63M	1840	30°- 45°	⅝	⅝	2⅞	4⅜	6	4⅝	8⅝	60
63A TO 63N	2030	63A TO 63K	1220	46°- 60°	⅝							
63A TO 63P	3080	63A TO 63P	2570	30°- 45°	⅝	⅝	3¾	5⅜	7	5⅝	11¼	60
63A TO 63N	2080	63A TO 63M	1690	46°- 60°	⅝							
75A TO 75Q	3500	75A TO 75P	2570	30°- 45°	¾							
75A TO 75N	2020	75A TO 75M	1690	46°- 60°	¾							
100A TO 100Q	3500	100A TO 100P	2570	30°- 45°	1							
100A TO 100N	2020	100A TO 100M	1690	46°- 60°	1							

SEE DETAIL N0.00 FOR SECTION NOTES
[1] OVERSTRENGTH FACTOR AS REQUIRED FOR ANCHORAGE TO CONCRETE.
[2] FOR SLWC SLAB AND BEAM, REDUCE ALLOWABLE LATERAL LOAD BY MULTIPLYING ALLOWABLE LOAD BY A FACTOR OF 0.68.
[3] EDGE DISTANCE PERPENDICULAR TO Cmin SHALL BE 1.5*Cmin, MINIMUM.
[4] SEE PAGE N1.73.1 FOR ADDITIONAL ALLOWABLE LOAD TABLES.

MASON WEST
1601 E. Miraloma Ave. Placentia, CA 92870
TEL (714) 630 - 0701, www.masonwest.com

Jiefu "Jeff" Zhang, SE
California SE No. S5270

SEISMIC BRACKET ATTACHMENT TO CONCRETE SLAB, BEAM OR WALL WITH (4) CONCRETE SCREW ANCHORS

BRACE BRACKET ATTACHMENT TYPE	ALLOWABLE LATERAL LOAD F_p^2 LBS	$\Omega_0 = 2.0^1$ BRACE BRACKET ATTACHMENT TYPE	$\Omega_0 = 2.0^1$ ALLOWABLE LATERAL LOAD F_p^2 LBS	MAX BRACE RANGE q	BOLT DIA. INCH	MASON IND. N.Y. SAST CONCRETE SCREW ANCHOR (ICC ESR-2713) SPECIAL INSPECTION REQ'D						
						DIA. da INCH	MIN. EFF. EMBED. hef INCH	MIN. HOLE DEPTH ho INCH	MIN. BASE TH. ha INCH	MIN. EDGE Cmin INCH	MIN. SPACING Smin INCH	MAX INSTALL. TORQUE FT-LBS
63A TO 63P	3080	63A TO 63N	2140	30°- 45°	5/8	5/8	3	4 1/2	6	4 1/2	9	100
63A TO 63N	2080	63A TO 63L	1450	46°- 60°	5/8							
63A TO 63P	3080	63A TO 63P	3080	30°- 45°	5/8	5/8	4 1/4	6	8 1/2	6 3/8	12 3/4	100
63A TO 63N	2080	63A TO 63N	2080	46°- 60°	5/8							
75A TO 75Q	3500	75A TO 75P	3500	30°- 45°	3/4							
75A TO 75N	2020	75A TO 75N	2020	46°- 60°	3/4							
100A TO 100Q	3500	100A TO 100P	3500	30°- 45°	1							
100A TO 100N	2020	100A TO 100N	2020	46°- 60°	1							

BRACE BRACKET ATTACHMENT TYPE	ALLOWABLE LATERAL LOAD F_p^2 LBS	$\Omega_0 = 2.0^1$ BRACE BRACKET ATTACHMENT TYPE	$\Omega_0 = 2.0^1$ ALLOWABLE LATERAL LOAD F_p^2 LBS	MAX BRACE RANGE q	BOLT DIA. INCH	HILTI KH-EZ CONCRETE SCREW ANCHOR (ICC ESR-3027) SPECIAL INSPECTION REQ'D						
						DIA. da INCH	MIN. EFF. EMBED. hef INCH	MIN. HOLE DEPTH ho INCH	MIN. BASE TH. ha INCH	MIN. EDGE Cmin INCH	MIN. SPACING Smin INCH	MAX INSTALL. TORQUE FT-LBS
63A TO 63P	3080	63A TO 63M	1910	30°- 45°	5/8	5/8	2 1/2	3 5/8	5	3 3/4	7 1/2	85
63A TO 63N	2080	63A TO 63L	1350	46°- 60°	5/8							
63A TO 63P	3080	63A TO 63P	3080	30°- 45°	5/8	5/8	3 7/8	5 3/8	7	5 13/16	11 5/8	85
63A TO 63N	2080	63A TO 63N	2080	46°- 60°	5/8							
75A TO 75Q	3500	75A TO 75Q	3500	30°- 45°	3/4							
75A TO 75N	2020	75A TO 75N	2020	46°- 60°	3/4							
100A TO 100Q	3500	100A TO 100Q	3500	30°- 45°	1							
100A TO 100N	2020	100A TO 100N	2020	46°- 60°	1							

SEE DETAIL N0.00 FOR SECTION NOTES

[1] OVERSTRENGTH FACTOR AS REQUIRED FOR ANCHORAGE TO CONCRETE.

[2] FOR SLWC SLAB AND BEAM, REDUCE ALLOWABLE LATERAL LOAD BY MULTIPLYING ALLOWABLE LOAD BY A FACTOR OF 0.68.

[3] EDGE DISTANCE PERPENDICULAR TO Cmin SHALL BE 1.5*Cmin, MINIMUM.

HCAi
OPM-0043
BY: William Staehlin
DATE: 1/23/2023
REVIEWED FOR CODE COMPLIANCE
FOR PERMIT
BUILDING CODE, 2022

MASON WEST
1601 E. Miraloma Ave. Placentia, CA 92870
TEL (714) 630 - 0701, www.masonwest.com

Jiefu "Jeff" Zhang, SE
California SE No. S5270

SEISMIC BRACKET ATTACHMENT TO CONCRETE SLAB, BEAM OR WALL WITH (1) HILTI KCM-WF/PD CONCRETE INSERT

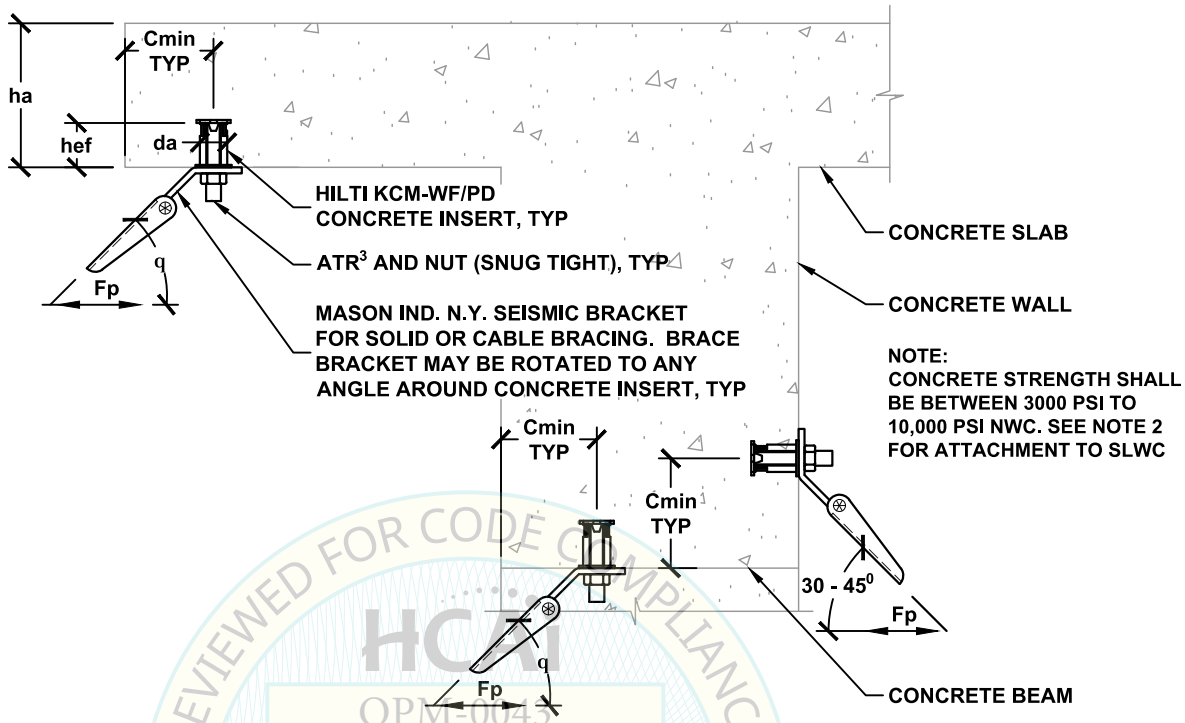

REVIEWED FOR CODE COMPLIANCE
HCAi
OPM-0043
BY: William Staehlin
DATE: 01/23/2023
CALIFORNIA BUILDING CODE 2022

BRACE BRACKET ATTACHMENT TYPE	ALLOWABLE LATERAL LOAD Fp^2 LBS	$\Omega_0 = 2.0^1$ BRACE BRACKET ATTACHMENT TYPE	ALLOWABLE LATERAL LOAD Fp^2 LBS	MAX BRACE RANGE q	ATR DIA. INCH	HILTI KCM-WF/PD CONCRETE INSERT (ICC ESR-4145) SPECIAL INSPECTION REQ'D INSERT COLOR	DIA. da (INCH)	MIN. EFF. EMBED. hef INCH	MIN. BASE TH. ha INCH	MIN. EDGE Cmin (INCH)	MIN. SPACING Smin (INCH)
38A TO 38C	220	38A TO 38B	130	30°- 45°	⅜	GREEN	0.5 (⅜")	1⅛	2½	2¼	4½
38A TO 38C	180	38A TO 38A	110	46°- 60°	⅜						
50A TO 50F	510	50A TO 50D	310	30°- 45°	½	RED	0.87 (½"-⅝")	2	3	3¼	6½
50A TO 50E	420	50A TO 50D	250	46°- 60°	½						
63A TO 63F	510	63A TO 63D	310	30°- 45°	⅝						
63A TO 63E	420	63A TO 63D	250	46°- 60°	⅝						
50A TO 50J	910	50A TO 50F	540	30°- 45°	½	GREY	1.02 (½"-¾")	3	4	4½	9
50A TO 50H	740	50A TO 50F	450	46°- 60°	½						
63A TO 63J	910	63A TO 63F	540	30°- 45°	⅝						
63A TO 63H	740	63A TO 63F	450	46°- 60°	⅝						
75A TO 75J	910	75A TO 75F	540	30°- 45°	¾						
75A TO 75H	740	75A TO 75F	450	46°- 60°	¾						

SEE DETAIL N0.00 FOR SECTION NOTES

[1] OVERSTRENGTH FACTOR AS REQUIRED FOR ANCHORAGE TO CONCRETE.

[2] FOR SLWC SLAB AND BEAM, REDUCE ALLOWABLE LATERAL LOAD BY MULTIPLYING ALLOWABLE LOAD BY A FACTOR OF 0.85.

[3] ATR SHALL BE ASTM A93 GR. B7, ASTM A325, OR ASTM F1554 GR. 105.

MASON WEST
1601 E. Miraloma Ave. Placentia, CA 92870
TEL (714) 630 - 0701, www.masonwest.com

Jiefu "Jeff" Zhang, SE
California SE No. S5270

PAGE
N1.80

SEISMIC BRACKET ATTACHMENT TO CONCRETE SLAB, BEAM OR WALL WITH (2) HILTI KCM-WF/PD CONCRETE INSERT

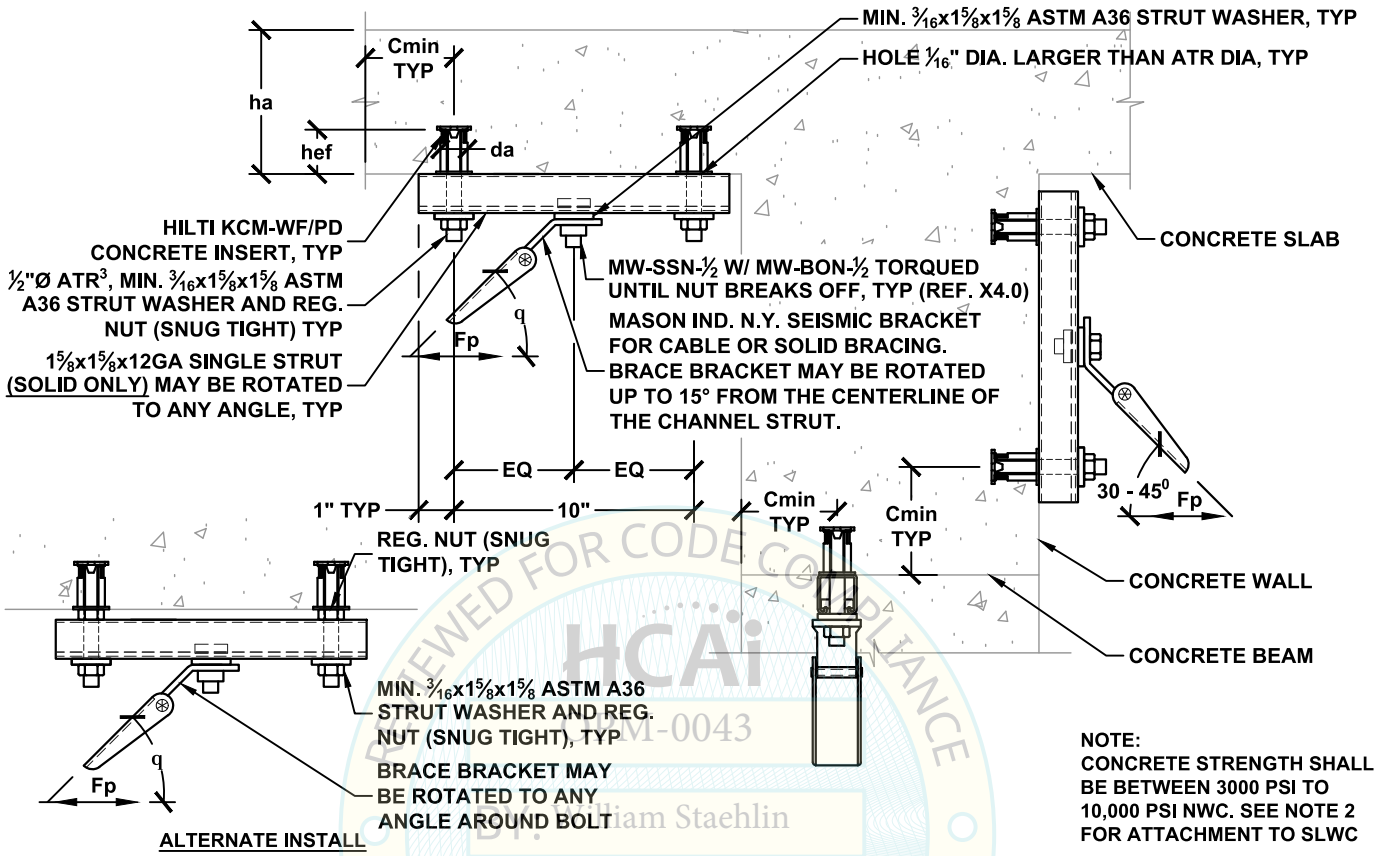

NOTE:
CONCRETE STRENGTH SHALL BE BETWEEN 3000 PSI TO 10,000 PSI NWC. SEE NOTE 2 FOR ATTACHMENT TO SLWC

BRACE BRACKET ATTACHMENT TYPE	ALLOWABLE LATERAL LOAD Fp^2 LBS	$\Omega_0 = 2.0^1$ BRACE BRACKET ATTACHMENT TYPE	ALLOWABLE LATERAL LOAD Fp^2 LBS	MAX BRACE RANGE q	BOLT DIA. INCH	HILTI KCM-WF/PD CONCRETE INSERT (ICC ESR-4145) SPECIAL INSPECTION REQ'D: INSERT COLOR	DIA. da (INCH)	MIN. EFF. EMBED. hef INCH	MIN. BASE TH. ha INCH	MIN. EDGE Cmin (INCH)	MIN. SPACING Smin (INCH)
50A TO 50G	620	50A TO 50F	610	30°- 45°	1/2	RED	0.87 (1/2"-5/8")	2	3	3 1/4	6 1/2
50A TO 50F	530	50A TO 50E	500	46°- 60°	1/2						
63A TO 63G	620	63A TO 63F	610	30°- 45°	5/8						
63A TO 63F	530	63A TO 63E	500	46°- 60°	5/8						
50A TO 50G	620	50A TO 50G	620	30°- 45°	1/2	GREY	1.02 (1/2"-5/8")	3	4	4 1/2	9
50A TO 50F	530	50A TO 50F	530	46°- 60°	1/2						
63A TO 63G	620	63A TO 63G	620	30°- 45°	5/8						
63A TO 63F	530	63A TO 63F	530	46°- 60°	5/8						

SEE DETAIL N0.00 FOR SECTION NOTES
[1] OVERSTRENGTH FACTOR AS REQUIRED FOR ANCHORAGE TO CONCRETE.
[2] FOR SLWC SLAB AND BEAM, REDUCE ALLOWABLE LATERAL LOAD BY MULTIPLYING ALLOWABLE LOAD BY A FACTOR OF 0.85.
[3] ATR SHALL BE ASTM A93 GR. B7, ASTM A325, OR ASTM F1554 GR. 105.

MASON WEST
1601 E. Miraloma Ave. Placentia, CA 92870
TEL (714) 630 - 0701, www.masonwest.com

Jiefu "Jeff" Zhang, SE
California SE No. S5270

PAGE
N1.81

HCAi
OPM-0043
BY: William Staehlin
DATE: 01/23/2023
REVIEWED FOR CODE COMPLIANCE CALIFORNIA BUILDING CODE, 2022

SEISMIC BRACKET ATTACHMENT
TO CONCRETE SLAB, BEAM OR WALL
WITH (1) DEWALT/POWERS WOOD-KNOCKER/WOOD-KNOCKER II+ CONCRETE INSERT

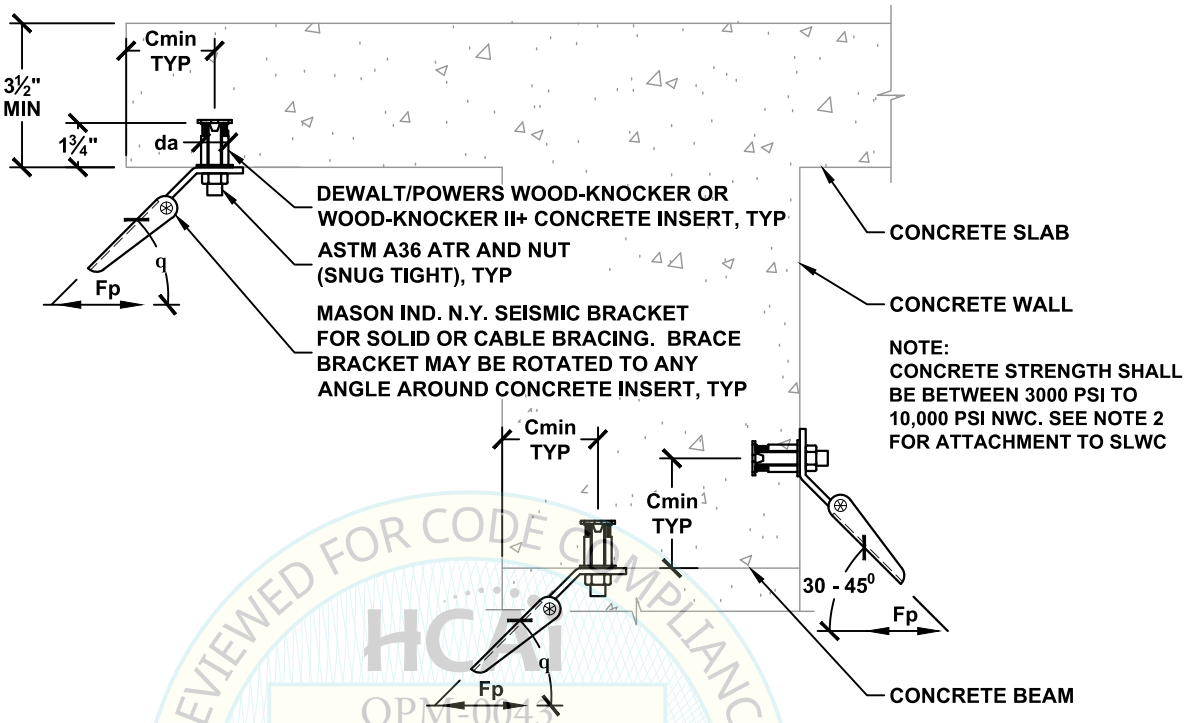

REVIEWED FOR CODE COMPLIANCE
HCAi
OPM-0043
BY: William Staehlin
DATE: 01/23/2023
CALIFORNIA BUILDING CODE, 2022

BRACE BRACKET ATTACHMENT TYPE	ALLOWABLE LATERAL LOAD Fp^2 LBS	$\Omega_0 = 2.0^1$ BRACE BRACKET ATTACHMENT TYPE	ALLOWABLE LATERAL LOAD Fp^2 LBS	MAX BRACE RANGE q	ATR DIA. INCH	DEWALT/POWERS WOOD-KNOCKER OR WOOD-KNOCKER II+ CONCRETE INSERT (ICC ESR-3657) SPECIAL INSPECTION REQ'D DIA. da (INCH)	MIN. EDGE Cmin (INCH)	MIN. SPACING Smin (INCH)
38A TO 38E	410	38A TO 38D	250	30°- 45°	⅜	0.7 (⅜"Ø)	3	6
38A TO 38D	330	38A TO 38C	200	46°- 60°	⅜			
50A TO 50E	410	50A TO 50D	250	30°- 45°	½	0.7 (½"Ø)	3	6
50A TO 50D	330	50A TO 50C	200	46°- 60°	½			
63A TO 63E	440	63A TO 63D	270	30°- 45°	⅝	1.0 (⅝"Ø)	3	6
63A TO 63E	360	63A TO 63C	210	46°- 60°	⅝			
75A TO 75E	440	75A TO 75D	270	30°- 45°	¾	1.0 (¾"Ø)	3	6
75A TO 75E	360	75A TO 75C	210	46°- 60°	¾			

SEE DETAIL N0.00 FOR SECTION NOTES
[1] OVERSTRENGTH FACTOR AS REQUIRED FOR ANCHORAGE TO CONCRETE.
[2] FOR SLWC SLAB AND BEAM, REDUCE ALLOWABLE LATERAL LOAD BY MULTIPLYING ALLOWABLE LOAD BY A FACTOR OF 0.85.

MASON WEST
1601 E. Miraloma Ave. Placentia, CA 92870
TEL (714) 630 - 0701, www.masonwest.com

Jiefu "Jeff" Zhang, SE
California SE No. S5270

PAGE
N1.90

SEISMIC BRACKET ATTACHMENT
TO CONCRETE SLAB, BEAM OR WALL
WITH (2) DEWALT/POWERS WOOD-KNOCKER/WOOD-KNOCKER II+ CONCRETE INSERT

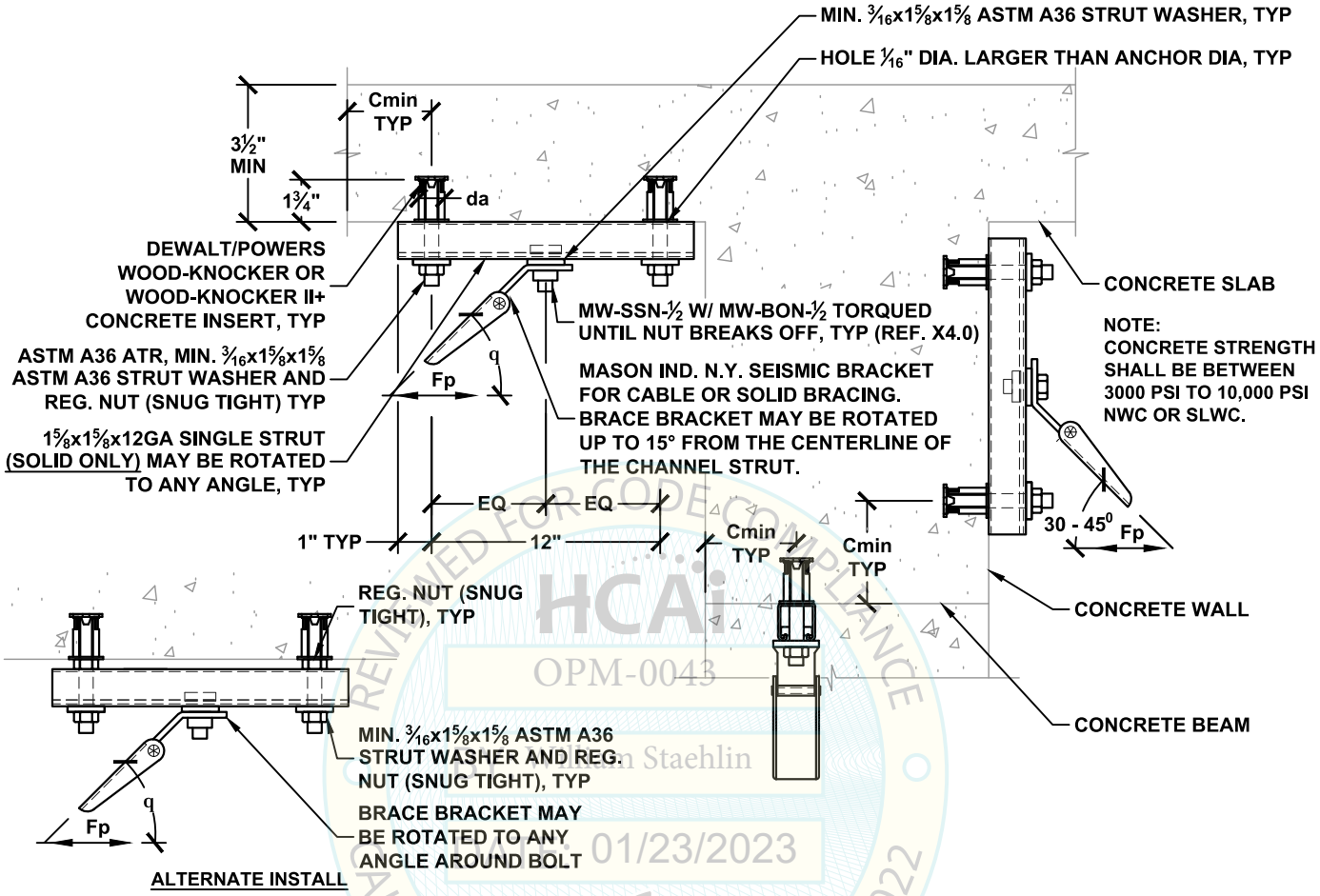

REVIEWED FOR CODE COMPLIANCE
CALIFORNIA BUILDING CODE 2022
HCAi
OPM-0043
William Staehlin
01/23/2023

BRACE BRACKET ATTACHMENT TYPE	ALLOWABLE LATERAL LOAD Fp^2 LBS	$\Omega_0 = 2.0^1$ BRACE BRACKET ATTACHMENT TYPE	$\Omega_0 = 2.0^1$ ALLOWABLE LATERAL LOAD Fp^2 LBS	MAX BRACE RANGE q	ATR DIA. INCH	DEWALT/POWERS WOOD-KNOCKER OR WOOD-KNOCKER II+ CONCRETE INSERT (ICC ESR-3657) SPECIAL INSPECTION REQ'D: DIA. da (INCH)	MIN. EDGE Cmin (INCH)	MIN. SPACING Smin (INCH)
50A TO 50G	620	50A TO 50F	490	30°- 45°	½	0.7 (½"Ø)	3	6
50A TO 50F	530	50A TO 50E	400	46°- 60°	½			
50A TO 50G	620	50A TO 50F	530	30°- 45°	⅝	1.0 (⅝"Ø)	3	6
50A TO 50F	530	50A TO 50E	430	46°- 60°	⅝			

SEE DETAIL N0.00 FOR SECTION NOTES

[1] OVERSTRENGTH FACTOR AS REQUIRED FOR ANCHORAGE TO CONCRETE.

[2] FOR SLWC SLAB AND BEAM, REDUCE ALLOWABLE LATERAL LOAD BY MULTIPLYING ALLOWABLE LOAD BY A FACTOR OF 0.85.

MASON WEST
1601 E. Miraloma Ave. Placentia, CA 92870
TEL (714) 630 - 0701, www.masonwest.com

Jiefu "Jeff" Zhang, SE
California SE No. S5270

PAGE
N1.91

SEISMIC BRACKET ATTACHMENT
TO CONCRETE SLAB, BEAM OR WALL
WITH (2) DEWALT/POWERS WOOD-KNOCKER/WOOD-KNOCKER II+ CONCRETE INSERT

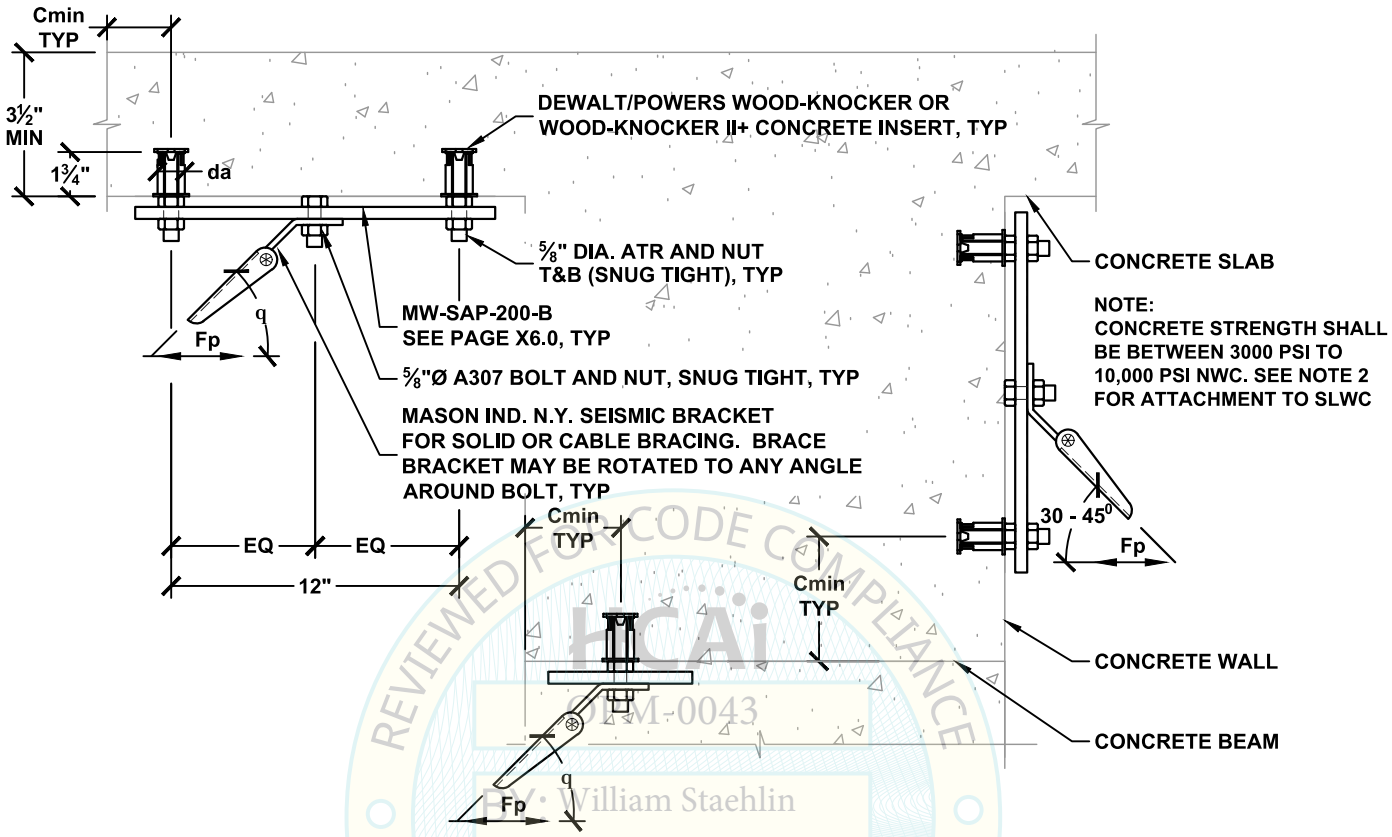

REVIEWED FOR CODE COMPLIANCE
CALIFORNIA BUILDING CODE, 2022
HCAi
OPM-0043
By: William Staehlin
DATE: 01/23/2023

BRACE BRACKET ATTACHMENT TYPE	ALLOWABLE LATERAL LOAD Fp^2 LBS	$\Omega_0 = 2.0^1$ BRACE BRACKET ATTACHMENT TYPE	$\Omega_0 = 2.0^1$ ALLOWABLE LATERAL LOAD Fp^2 LBS	MAX BRACE RANGE q	DEWALT/POWERS WOOD-KNOCKER OR WOOD-KNOCKER II+ CONCRETE INSERT (ICC ESR-3657) SPECIAL INSPECTION REQ'D DIA. da (INCH)	MIN. EDGE Cmin (INCH)	MIN. SPACING Smin (INCH)
63A TO 63J	880	63A TO 63F	530	30°- 45°	1.0 (⅝"Ø)	3	6
63A TO 63H	710	63A TO 63E	430	46°- 60°			

SEE DETAIL N0.00 FOR SECTION NOTES
[1] OVERSTRENGTH FACTOR AS REQUIRED FOR ANCHORAGE TO CONCRETE.
[2] FOR SLWC SLAB AND BEAM, REDUCE ALLOWABLE LATERAL LOAD BY MULTIPLYING ALLOWABLE LOAD BY A FACTOR OF 0.85.

MASON WEST, INC.
1601 E. Miraloma Ave. Placentia, CA 92870
TEL (714) 630 - 0701, www.masonwest.com

PAGE
N1.92

SEISMIC BRACKET ATTACHMENT
TO CONCRETE SLAB, BEAM OR WALL
WITH (4) DEWALT/POWERS WOOD-KNOCKER/WOOD-KNOCKER II+ CONCRETE INSERT

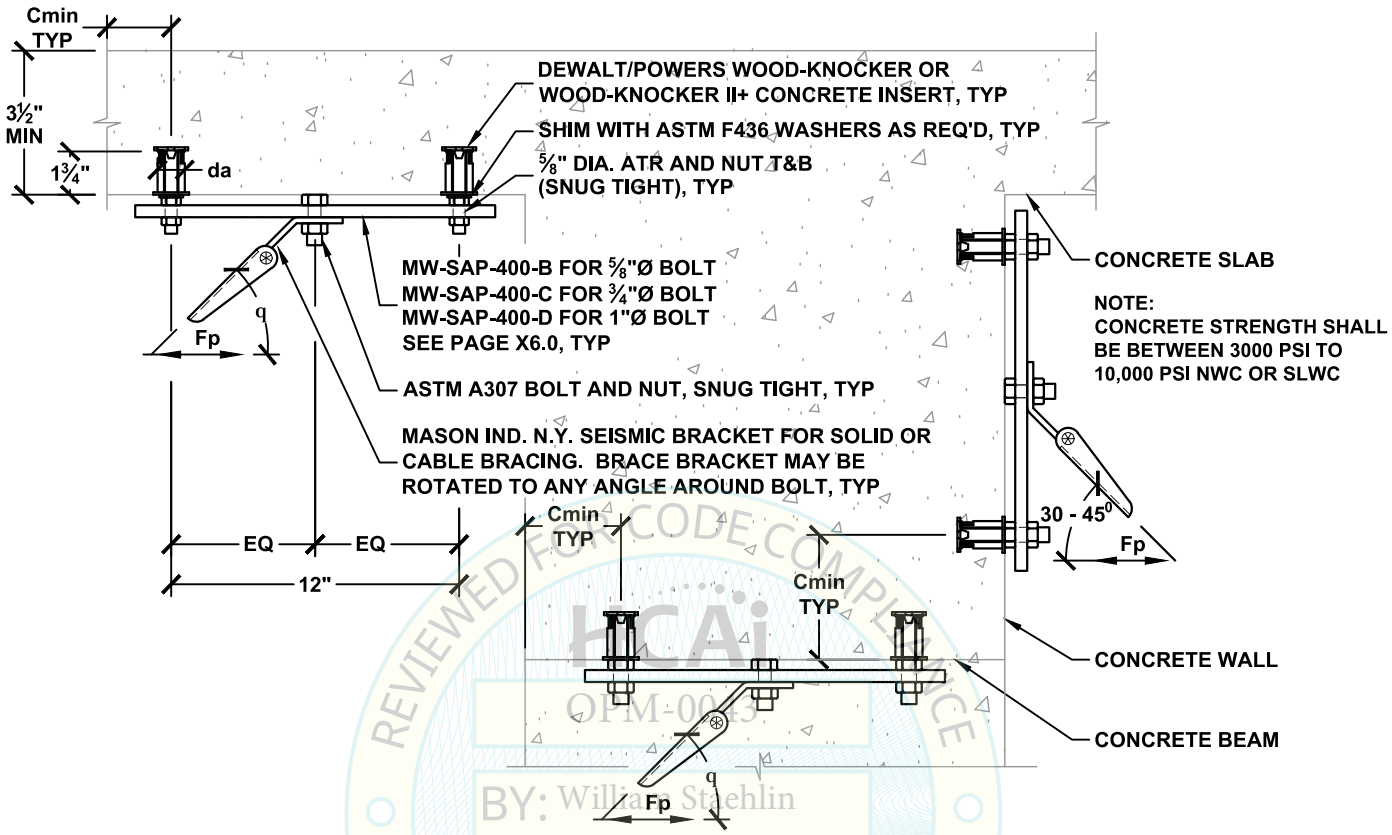

REVIEWED FOR CODE COMPLIANCE
HCAi
OPM-0043
BY: William Staehlin
DATE: 01/23/2023
CALIFORNIA BUILDING CODE, 2022

BRACE BRACKET ATTACHMENT TYPE	ALLOWABLE LATERAL LOAD Fp^2 LBS	$\Omega_0 = 2.0^1$ BRACE BRACKET ATTACHMENT TYPE	$\Omega_0 = 2.0^1$ ALLOWABLE LATERAL LOAD Fp^2 LBS	MAX BRACE RANGE q	BOLT DIA. INCH	DEWALT/POWERS WOOD-KNOCKER OR WOOD-KNOCKER II+ CONCRETE INSERT (ICC ESR-3657) SPECIAL INSPECTION REQ'D		
						DIA. da (INCH)	MIN. EDGE Cmin (INCH)	MIN. SPACING Smin (INCH)
63A TO 63M	1770	63A TO 63K	1060	30°- 45°	⅝	1.0 (⅝"Ø)	3	6
63A TO 63L	1420	63A TO 63J	850	46°- 60°	⅝			
75A TO 75M	1770	75A TO 75K	1060	30°- 45°	¾			
75A TO 75L	1420	75A TO 75J	850	46°- 60°	¾			
100A TO 100M	1770	100A TO 100K	1060	30°- 45°	1			
100A TO 100L	1420	100A TO 100J	850	46°- 60°	1			

SEE DETAIL N0.00 FOR SECTION NOTES
[1] OVERSTRENGTH FACTOR AS REQUIRED FOR ANCHORAGE TO CONCRETE.
[2] FOR SLWC SLAB AND BEAM, REDUCE ALLOWABLE LATERAL LOAD BY MULTIPLYING ALLOWABLE LOAD BY A FACTOR OF 0.85.

MASON WEST
1601 E. Miraloma Ave. Placentia, CA 92870
TEL (714) 630 - 0701, www.masonwest.com

Jiefu "Jeff" Zhang, SE
California SE No. S5270

PAGE
N1.93

SEISMIC BRACKET ATTACHMENT TO CONCRETE SLAB, BEAM OR WALL WITH (1) CADDY CRLW CONCRETE INSERT

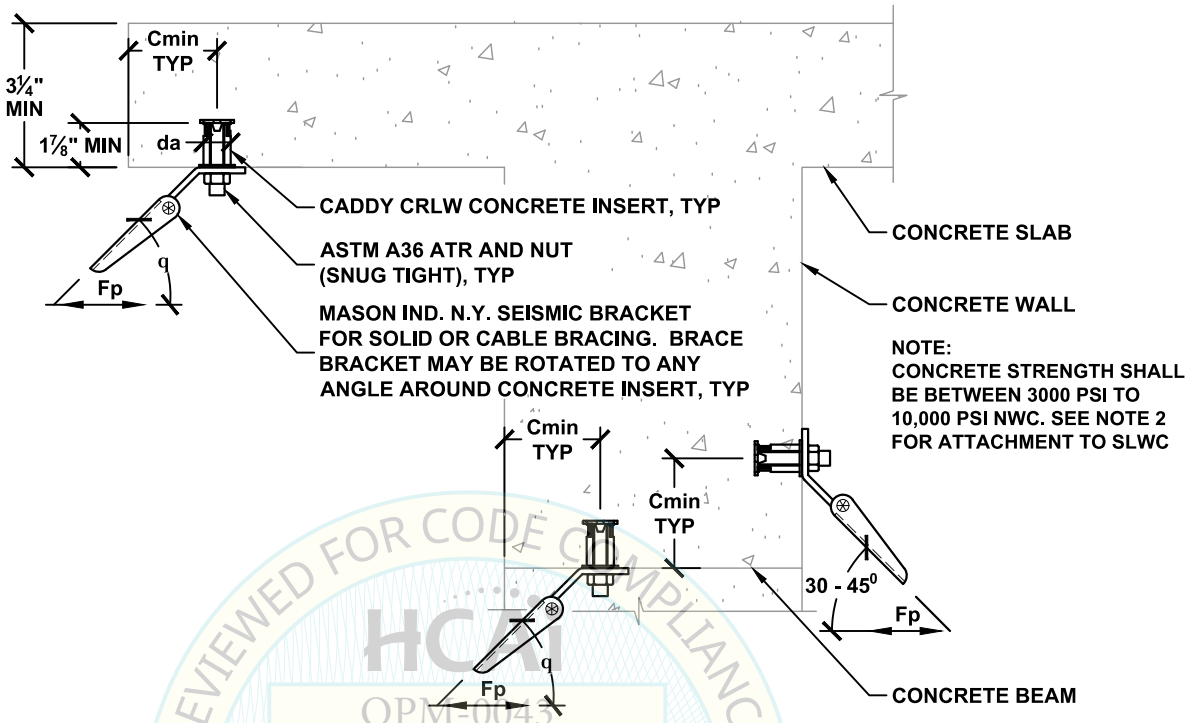

REVIEWED FOR CODE COMPLIANCE
CALIFORNIA BUILDING CODE, 2022
HCAI
OPM-0043
BY: William Staehlin
DATE: 01/23/2023

BRACE BRACKET ATTACHMENT TYPE	ALLOWABLE LATERAL LOAD Fp^2 LBS	$\Omega_0 = 2.0^1$ BRACE BRACKET ATTACHMENT TYPE	$\Omega_0 = 2.0^1$ ALLOWABLE LATERAL LOAD Fp^2 LBS	MAX BRACE RANGE q	ATR DIA. INCH	CADDY CRLW CONCRETE INSERT (ICC ESR-3864) SPECIAL INSPECTION REQ'D DIA. da (INCH)	MIN. EDGE Cmin (INCH)	MIN. SPACING Smin (INCH)
38A TO 38G	590	38A TO 38E	350	30°- 45°	⅜	0.61 (⅜"Ø)	6	8
38A TO 38F	460	38A TO 38D	270	46°- 60°	⅜			
50A TO 50G	600	50A TO 50E	360	30°- 45°	½	0.71 (½"Ø)	6	8
50A TO 50F	460	50A TO 50D	280	46°- 60°	½			

SEE DETAIL N0.00 FOR SECTION NOTES

[1] OVERSTRENGTH FACTOR AS REQUIRED FOR ANCHORAGE TO CONCRETE.

[2] FOR SLWC SLAB AND BEAM, REDUCE ALLOWABLE LATERAL LOAD BY MULTIPLYING ALLOWABLE LOAD BY A FACTOR OF 0.85.

MASON WEST
1601 E. Miraloma Ave. Placentia, CA 92870
TEL (714) 630 - 0701, www.masonwest.com

Jiefu "Jeff" Zhang, SE
California SE No. S5270

PAGE
N1.110

SEISMIC BRACKET ATTACHMENT TO CONCRETE SLAB, BEAM OR WALL WITH (2) CADDY CRLW CONCRETE INSERT

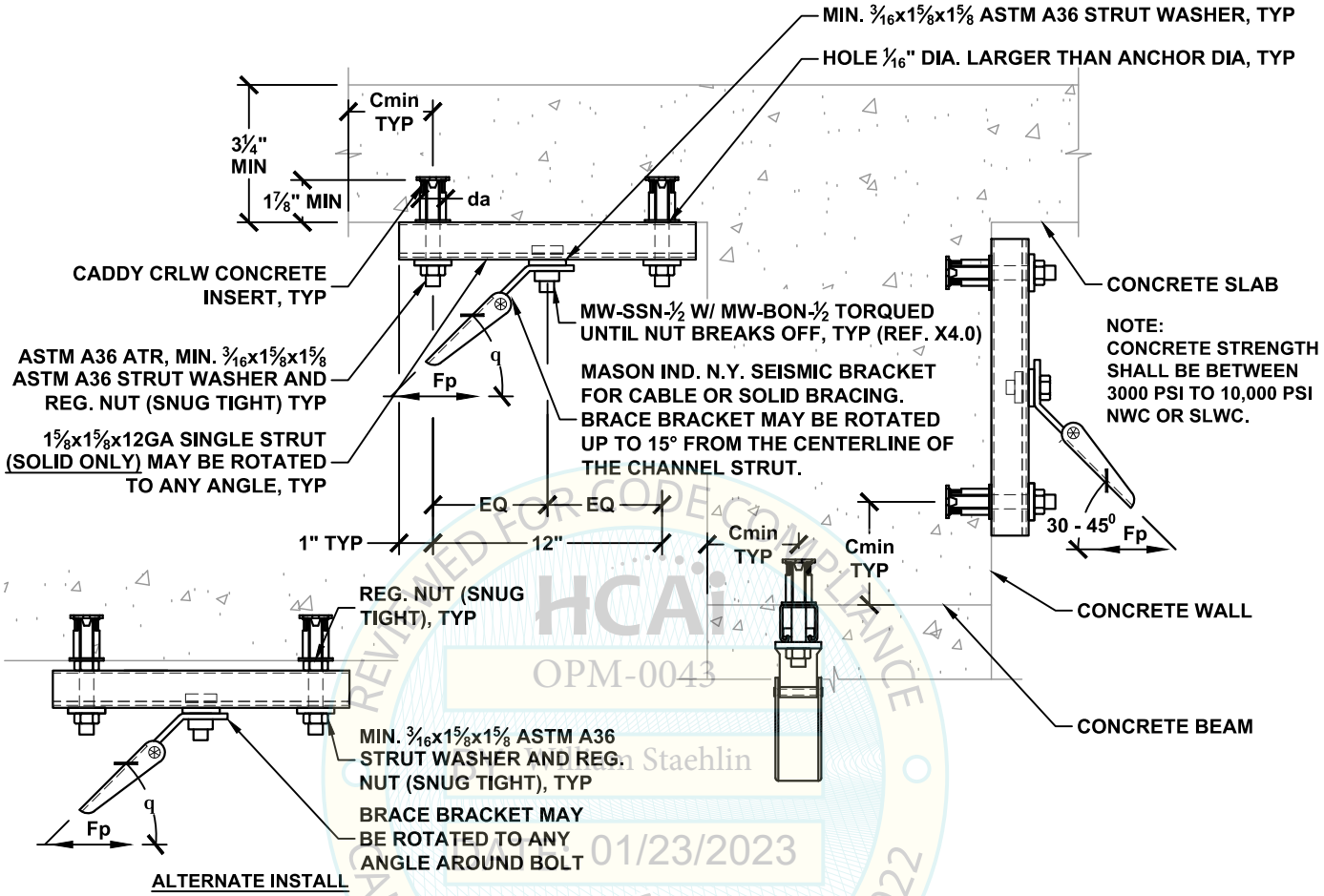

BRACE BRACKET ATTACHMENT TYPE	ALLOWABLE LATERAL LOAD Fp^2 LBS	$\Omega_0 = 2.0^1$ BRACE BRACKET ATTACHMENT TYPE	$\Omega_0 = 2.0^1$ ALLOWABLE LATERAL LOAD Fp^2 LBS	MAX BRACE RANGE q	ATR DIA. INCH	CADDY CRLW CONCRETE INSERT (ICC ESR-3864) SPECIAL INSPECTION REQ'D DIA. da (INCH)	MIN. EDGE Cmin (INCH)	MIN. SPACING Smin (INCH)
50A TO 50G	620	50A TO 50G	620	30°- 45°	3/8	0.61 (3/8"Ø)	6	8
50A TO 50F	530	50A TO 50F	530	46°- 60°	3/8			
50A TO 50G	620	50A TO 50G	620	30°- 45°	1/2	0.71 (1/2"Ø)	6	8
50A TO 50F	530	50A TO 50F	530	46°- 60°	1/2			

SEE DETAIL N0.00 FOR SECTION NOTES

[1] OVERSTRENGTH FACTOR AS REQUIRED FOR ANCHORAGE TO CONCRETE.

[2] FOR SLWC SLAB AND BEAM, REDUCE ALLOWABLE LATERAL LOAD BY MULTIPLYING ALLOWABLE LOAD BY A FACTOR OF 0.85.

MASON WEST
1601 E. Miraloma Ave. Placentia, CA 92870
TEL (714) 630 - 0701, www.masonwest.com

Jiefu "Jeff" Zhang, SE
California SE No. S5270

PAGE
N1.111

HCAi REVIEWED FOR CODE COMPLIANCE CALIFORNIA BUILDING CODE, 2022
OPM-0043
William Staehlin
01/23/2023

SEISMIC BRACKET ATTACHMENT
TO CONCRETE SLAB, BEAM OR WALL
WITH (1) HILTI KB-TZ2 CARBON STEEL CONCRETE ANCHOR

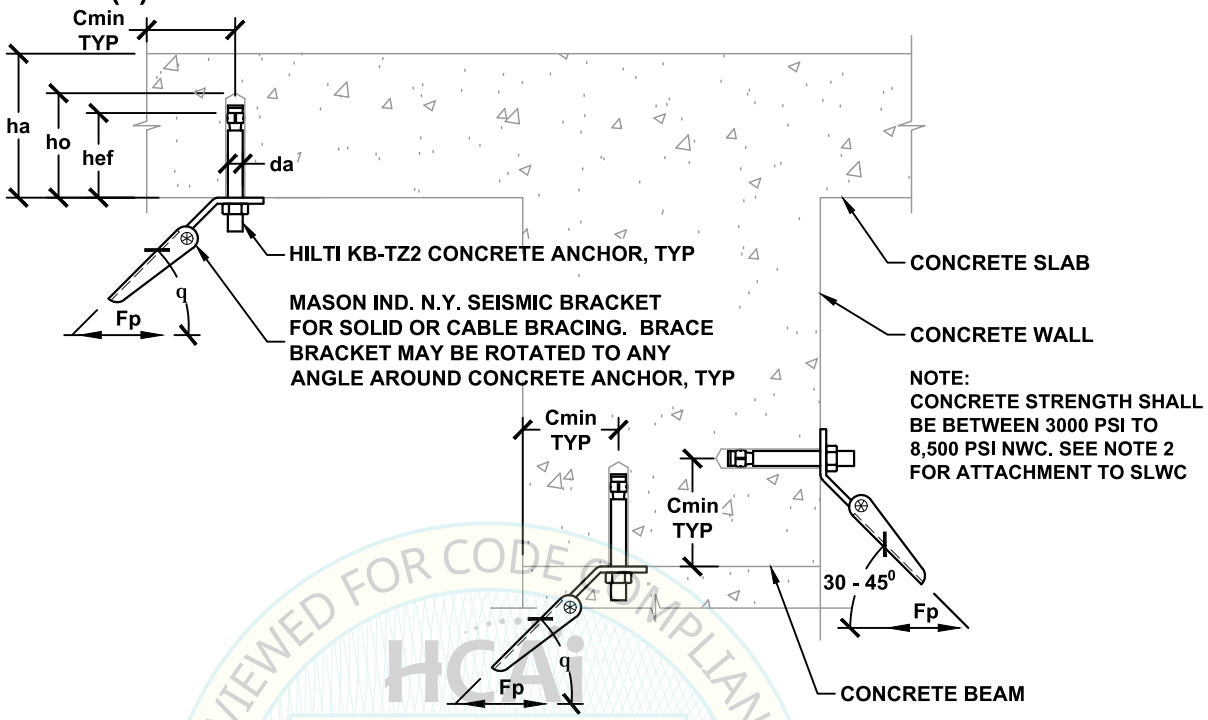

BRACE BRACKET ATTACHMENT TYPE	ALLOWABLE LATERAL LOAD Fp^2 LBS	$\Omega_0 = 2.0^1$ BRACE BRACKET ATTACHMENT TYPE	$\Omega_0 = 2.0^1$ ALLOWABLE LATERAL LOAD Fp^2 LBS	MAX BRACE RANGE q	HILTI KB-TZ2 CONCRETE ANCHOR (ICC ESR-4266) SPECIAL INSPECTION REQ'D DIA. da INCH	MIN. EFF. EMBED. hef INCH	MIN. HOLE DEPTH ho INCH	MIN. BASE TH. ha INCH	MIN. EDGE Cmin INCH	MIN. SPACING Smin INCH	TORQUE REQ'D FT-LBS
38A TO 38F	450	38A TO 38F	450	30°- 45°	3/8	2	2 3/4	4	4 1/2	6	30
38A TO 38D	270	38A TO 38D	270	46°- 60°							
50A TO 50F	460	50A TO 50F	460	30°- 45°	1/2	2	2 3/4	4	4 1/2	6	50
50A TO 50D	270	50A TO 50D	270	46°- 60°							
50A TO 50H	760	50A TO 50H	760	30°- 45°	1/2	3 1/4	4 1/4	5 1/2	6	9 3/4	50
50A TO 50F	460	50A TO 50F	460	46°- 60°							
63A TO 63J	920	63A TO 63J	920	30°- 45°	5/8	3 1/4	4 1/4	5 1/2	6	9 3/4	40
63A TO 63F	560	63A TO 63F	560	46°- 60°							
63A TO 63K	1040	63A TO 63K	1040	30°- 45°	5/8	4	4 3/4	6	12	12	40
63A TO 63G	620	63A TO 63G	620	46°- 60°							
75A TO 75L	1250	75A TO 75L	1250	30°- 45°	3/4	3 3/4	4 3/4	6	12	11 1/4	110
75A TO 75H	730	75A TO 75H	730	46°- 60°							
75A TO 75L	1390	75A TO 75L	1390	30°- 45°	3/4	4 3/4	5 3/4	8	12	14 1/4	110
75A TO 75H	820	75A TO 75K	820	46°- 60°							

SEE DETAIL N0.00 FOR SECTION NOTES

[1] OVERSTRENGTH FACTOR AS REQUIRED FOR ANCHORAGE TO CONCRETE.

[2] FOR SLWC SLAB AND BEAM, REDUCE ALLOWABLE LATERAL LOAD BY MULTIPLYING ALLOWABLE LOAD BY A FACTOR OF 0.68.

[3] EDGE DISTANCE PERPENDICULAR TO Cmin SHALL BE 1.5*Cmin, MINIMUM.

REVIEWED FOR CODE COMPLIANCE
HCAi
OPM-0043
BY: William Staehlin
DATE: 01/23/2023
CALIFORNIA BUILDING CODE, 2022

MASON WEST
1601 E. Miraloma Ave. Placentia, CA 92870
TEL (714) 630 - 0701, www.masonwest.com

Jiefu "Jeff" Zhang, SE
California SE No. S5270

SEISMIC BRACKET ATTACHMENT
TO CONCRETE SLAB, BEAM OR WALL
WITH (2) HILTI KB-TZ2 CARBON STEEL CONCRETE ANCHORS

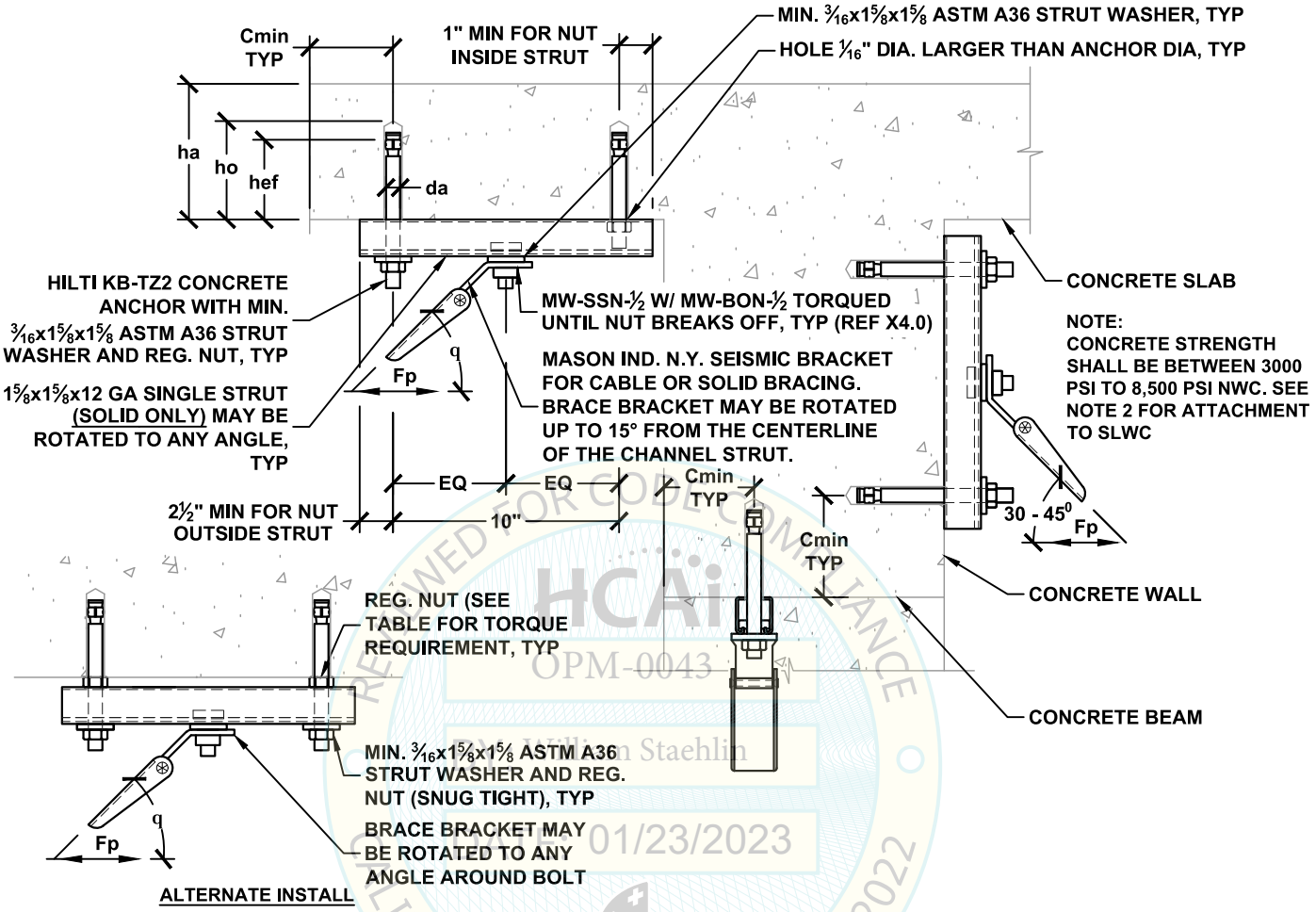

BRACE BRACKET ATTACHMENT TYPE	ALLOWABLE LATERAL LOAD Fp^2 LBS	$\Omega_0 = 2.0^1$ BRACE BRACKET ATTACHMENT TYPE	ALLOWABLE LATERAL LOAD Fp^2 LBS	MAX BRACE RANGE q	HILTI KB-TZ2 CONCRETE ANCHOR (ICC ESR-4266) SPECIAL INSPECTION REQ'D DIA. da INCH	MIN. EFF. EMBED. hef INCH	MIN. HOLE DEPTH ho INCH	MIN. BASE TH. ha INCH	MIN. EDGE Cmin INCH	MIN. SPACING Smin INCH	TORQUE REQ'D FT-LBS
50A TO 50G	620	50A TO 50G	620	30°- 45°	½	2	2¾	4	4½	6	50
50A TO 50F	530	50A TO 50F	530	46°- 60°							
50A TO 50G	620	50A TO 50G	620	30°- 45°	½	3¼	4¾	5½	6	9¾	50
50A TO 50F	530	50A TO 50F	530	46°- 60°							

SEE DETAIL N0.00 FOR SECTION NOTES

[1] OVERSTRENGTH FACTOR AS REQUIRED FOR ANCHORAGE TO CONCRETE.

[2] FOR SLWC SLAB AND BEAM, REDUCE ALLOWABLE LATERAL LOAD BY MULTIPLYING ALLOWABLE LOAD BY A FACTOR OF 0.68.

[3] EDGE DISTANCE PERPENDICULAR TO Cmin SHALL BE 1.5*Cmin, MINIMUM.

MASON WEST
1601 E. Miraloma Ave. Placentia, CA 92870
TEL (714) 630 - 0701, www.masonwest.com

Jiefu "Jeff" Zhang, SE
California SE No. S5270

PAGE
N1.131

REVIEWED FOR CODE COMPLIANCE CALIFORNIA BUILDING CODE 2022
HCAi
OPM-0043
By William Staehlin
DATE 01/23/2023

SEISMIC BRACKET ATTACHMENT
TO CONCRETE SLAB, BEAM OR WALL
WITH (2) HILTI KB-TZ2 CARBON STEEL CONCRETE ANCHORS

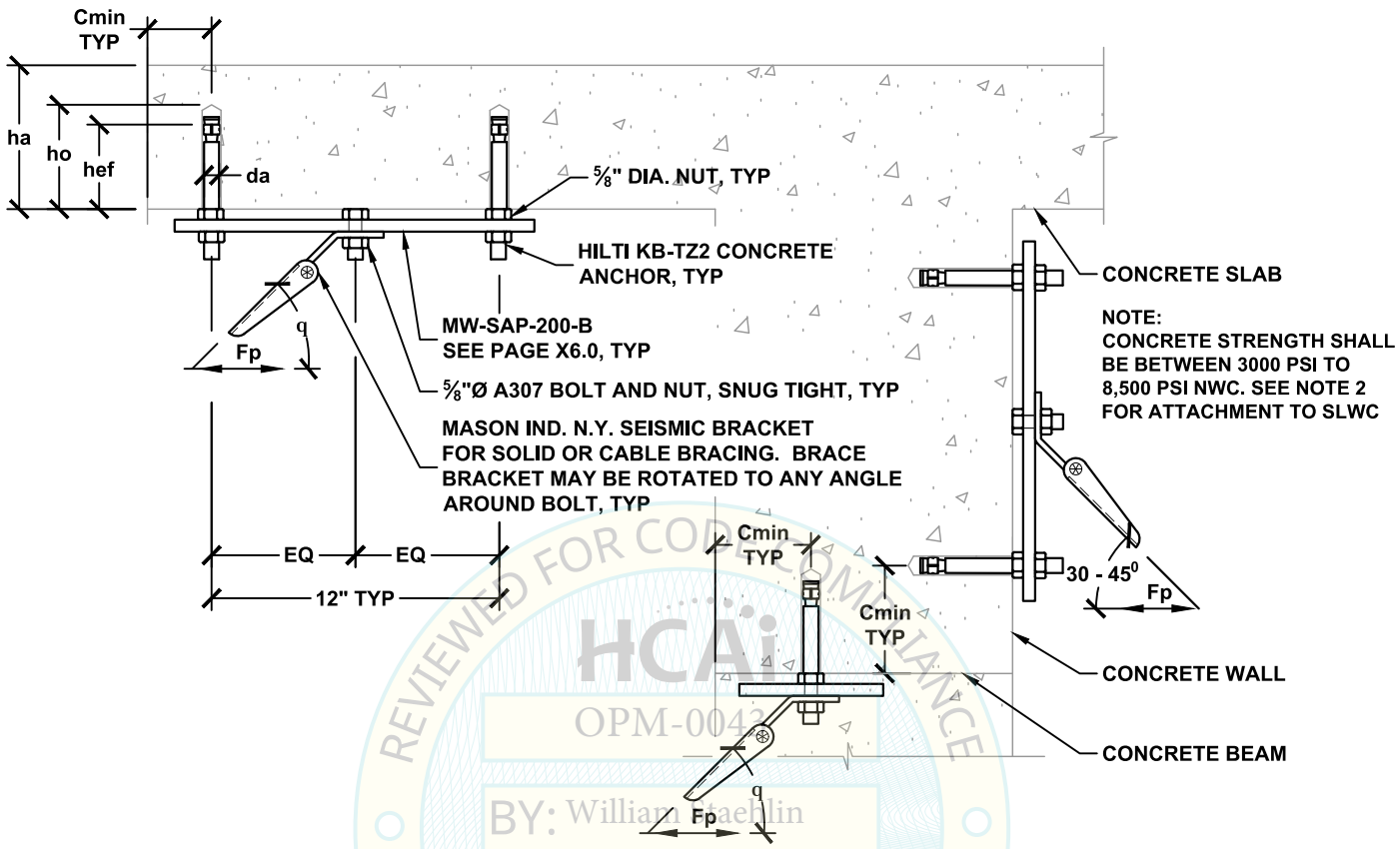

REVIEWED FOR CODE COMPLIANCE
HCAi
OPM-0043
BY: William Staehlin
DATE: 01/23/2023
CALIFORNIA BUILDING CODE 2022

BRACE BRACKET ATTACHMENT TYPE	ALLOWABLE LATERAL LOAD Fp^2 LBS	$\Omega_0 = 2.0^1$ BRACE BRACKET ATTACHMENT TYPE	ALLOWABLE LATERAL LOAD Fp^2 LBS	MAX BRACE RANGE q	HILTI KB-TZ2 CONCRETE ANCHOR (ICC ESR-4266) SPECIAL INSPECTION REQ'D DIA. da INCH	MIN. EFF. EMBED. hef INCH	MIN. HOLE DEPTH ho INCH	MIN. BASE TH. ha INCH	MIN. EDGE Cmin INCH	MIN. SPACING Smin INCH	TORQUE REQ'D FT-LBS
63A TO 63M	1930	63A TO 63M	1830	30°- 45°	⅝	3¼	4¼	5½	6	9¾	40
63A TO 63K	1110	63A TO 63K	1110	46°- 60°							
63A TO 63M	1930	63A TO 63M	1930	30°- 45°	⅝	4	4¾	6	12	12	40
63A TO 63K	1110	63A TO 63K	1110	46°- 60°							

SEE DETAIL N0.00 FOR SECTION NOTES
[1] OVERSTRENGTH FACTOR AS REQUIRED FOR ANCHORAGE TO CONCRETE.
[2] FOR SLWC SLAB AND BEAM, REDUCE ALLOWABLE LATERAL LOAD BY MULTIPLYING ALLOWABLE LOAD BY A FACTOR OF 0.68.
[3] EDGE DISTANCE PERPENDICULAR TO Cmin SHALL BE 1.5*Cmin, MINIMUM.

MASON WEST
1601 E. Miraloma Ave. Placentia, CA 92870
TEL (714) 630 - 0701, www.masonwest.com

Jiefu "Jeff" Zhang, SE
California SE No. S5270

PAGE
N1.132

SEISMIC BRACKET ATTACHMENT
TO CONCRETE SLAB, BEAM OR WALL
WITH (4) HILTI KB-TZ2 CARBON STEEL CONCRETE ANCHORS

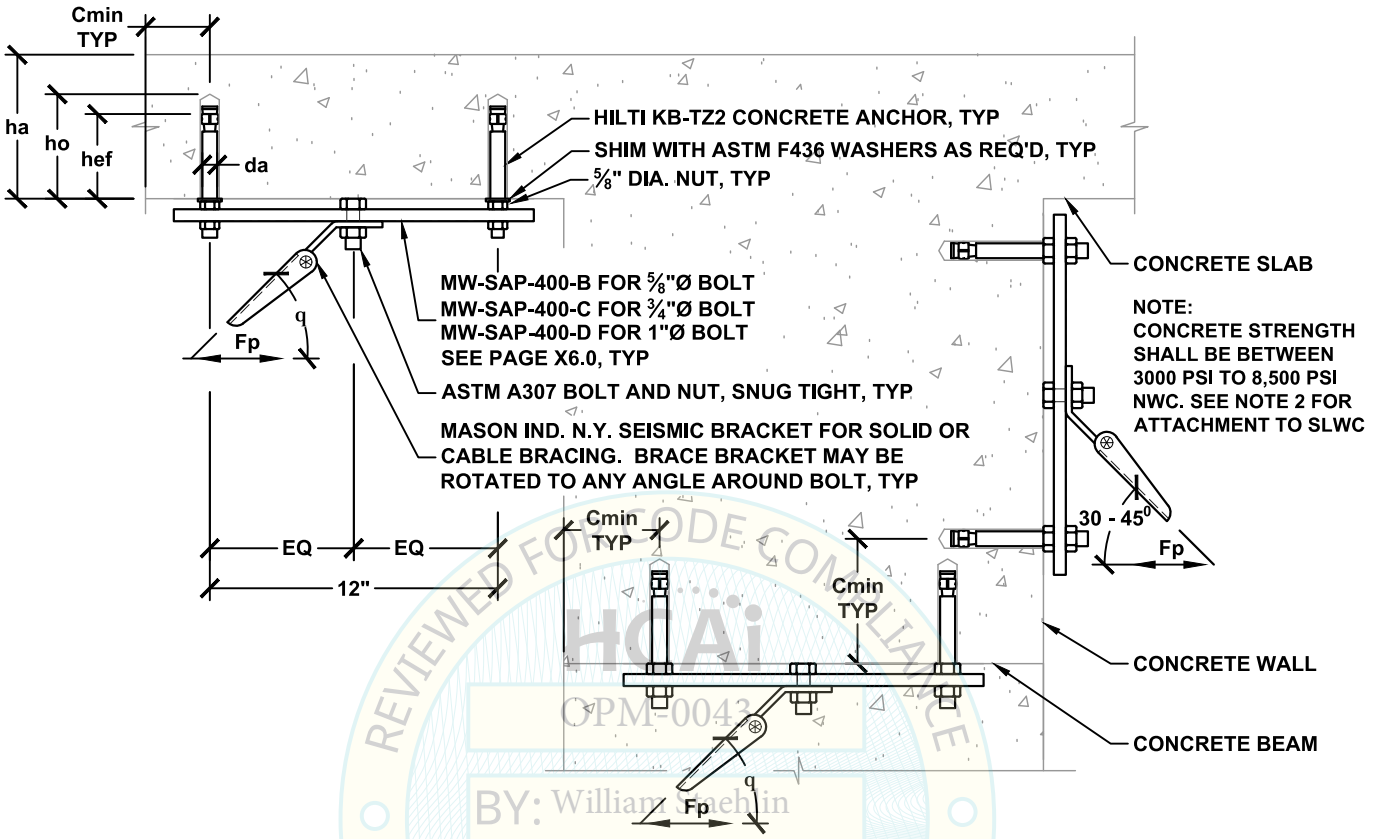

REVIEWED FOR CODE COMPLIANCE
HCAi
OPM-0043
BY: William Staehlin
DATE: 01/23/2023
CALIFORNIA BUILDING CODE

BRACE BRACKET ATTACHMENT TYPE	ALLOWABLE LATERAL LOAD Fp^2 LBS	$\Omega_0 = 2.0^1$ BRACE BRACKET ATTACHMENT TYPE	ALLOWABLE LATERAL LOAD Fp^2 LBS	MAX BRACE RANGE q	BOLT DIA. INCH	HILTI KB-TZ2 CONCRETE ANCHOR (ICC ESR-4266) SPECIAL INSPECTION REQ'D DIA. da INCH	MIN. EFF. EMBED. hef INCH	MIN. HOLE DEPTH ho INCH	MIN. BASE TH. ha INCH	MIN. EDGE Cmin INCH	MIN. SPACING Smin INCH	TORQUE REQ'D FT-LBS
63A TO 63P	3080	63A TO 63P	3080	30°- 45°	5/8	5/8	3 1/4	4 1/4	5 1/2	6	9 3/4	40
63A TO 63N	2080	63A TO 63N	2080	46°- 60°	5/8							
63A TO 63P	3080	63A TO 63P	3080	30°- 45°	5/8	5/8	4	4 3/4	6	12	12	40
63A TO 63N	2080	63A TO 63N	2080	46°- 60°	5/8							
75A TO 75Q	3500	75A TO 75Q	3500	30°- 45°	3/4							
75A TO 75N	2020	75A TO 75N	2020	46°- 60°	3/4							
100A TO 100Q	3500	100A TO 100Q	3500	30°- 45°	1							
100A TO 100N	2020	100A TO 100N	2020	46°- 60°	1							

SEE DETAIL N0.00 FOR SECTION NOTES

[1] OVERSTRENGTH FACTOR AS REQUIRED FOR ANCHORAGE TO CONCRETE.

[2] FOR SLWC SLAB AND BEAM, REDUCE ALLOWABLE LATERAL LOAD BY MULTIPLYING ALLOWABLE LOAD BY A FACTOR OF 0.68.

[3] EDGE DISTANCE PERPENDICULAR TO Cmin SHALL BE 1.5*Cmin, MINIMUM.

MASON WEST
1601 E. Miraloma Ave. Placentia, CA 92870
TEL (714) 630 - 0701, www.masonwest.com

Jiefu "Jeff" Zhang, SE
California SE No. S5270

PAGE
N1.133

SEISMIC BRACKET ATTACHMENT
TO CONCRETE FILLED METAL DECK
WITH (1) DEWALT/POWERS POWER-STUD+ SD1 CONCRETE ANCHOR

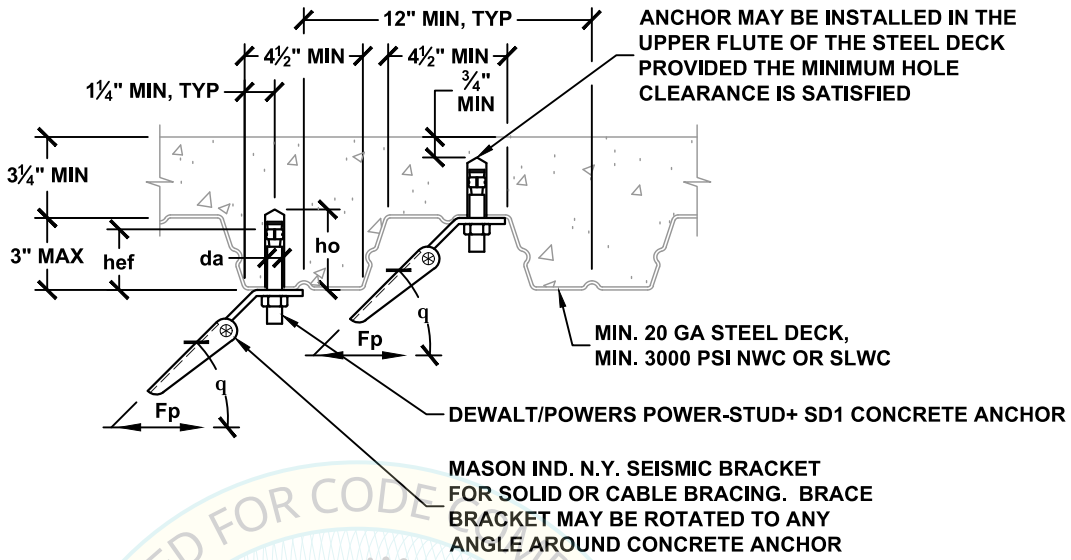

REVIEWED FOR CODE COMPLIANCE
HCAi
OPM-0043
BY: William Staehlin
DATE: 01/23/2023
CALIFORNIA BUILDING CODE 2022

BRACE BRACKET ATTACHMENT TYPE	ALLOWABLE LATERAL LOAD Fp LBS	$\Omega_0 = 2.0^1$ BRACE BRACKET ATTACHMENT TYPE	ALLOWABLE LATERAL LOAD Fp LBS	MAX BRACE RANGE q	DEWALT/POWERS POWER-STUD+ SD1 CONCRETE ANCHOR (ICC ESR-2818) SPECIAL INSPECTION REQ'D DIA. da INCH	MIN. EFF. EMBED. hef INCH	MIN. HOLE DEPTH ho INCH	MIN. SPACING Smin INCH	MIN. END DIST. Cmin INCH	TORQUE REQ'D FT-LBS
38A TO 38C	210	38A TO 38C	210	30°- 45°	⅜	2	2⅝	6¾	3⅜	20
38A TO 38A	120	38A TO 38A	120	46°- 60°						
50A TO 50D	330	50A TO 50D	330	30°- 45°	½	2	2¾	6¾	3⅜	40
50A TO 50C	200	50A TO 50C	200	46°- 60°						
63A TO 63D	310	63A TO 63D	310	30°- 45°	⅝	2¾	3¾	8¼	4⅛	80
63A TO 63C	180	63A TO 63C	180	46°- 60°						
75A TO 75E	440	75A TO 75E	440	30°- 45°	¾	3⅛	4¼	9⅜	4¾	110
75A TO 75D	250	75A TO 75D	250	46°- 60°						

SEE DETAIL N0.00 FOR SECTION NOTES

[1] OVERSTRENGTH FACTOR AS REQUIRED FOR ANCHORAGE TO CONCRETE.

MASON WEST
1601 E. Miraloma Ave. Placentia, CA 92870
TEL (714) 630 - 0701, www.masonwest.com

Jiefu "Jeff" Zhang, SE
California SE No. S5270

PAGE
N2.30

SEISMIC BRACKET ATTACHMENT
TO CONCRETE FILLED METAL DECK
WITH (2) DEWALT/POWERS POWER-STUD+ SD1 CONCRETE ANCHORS

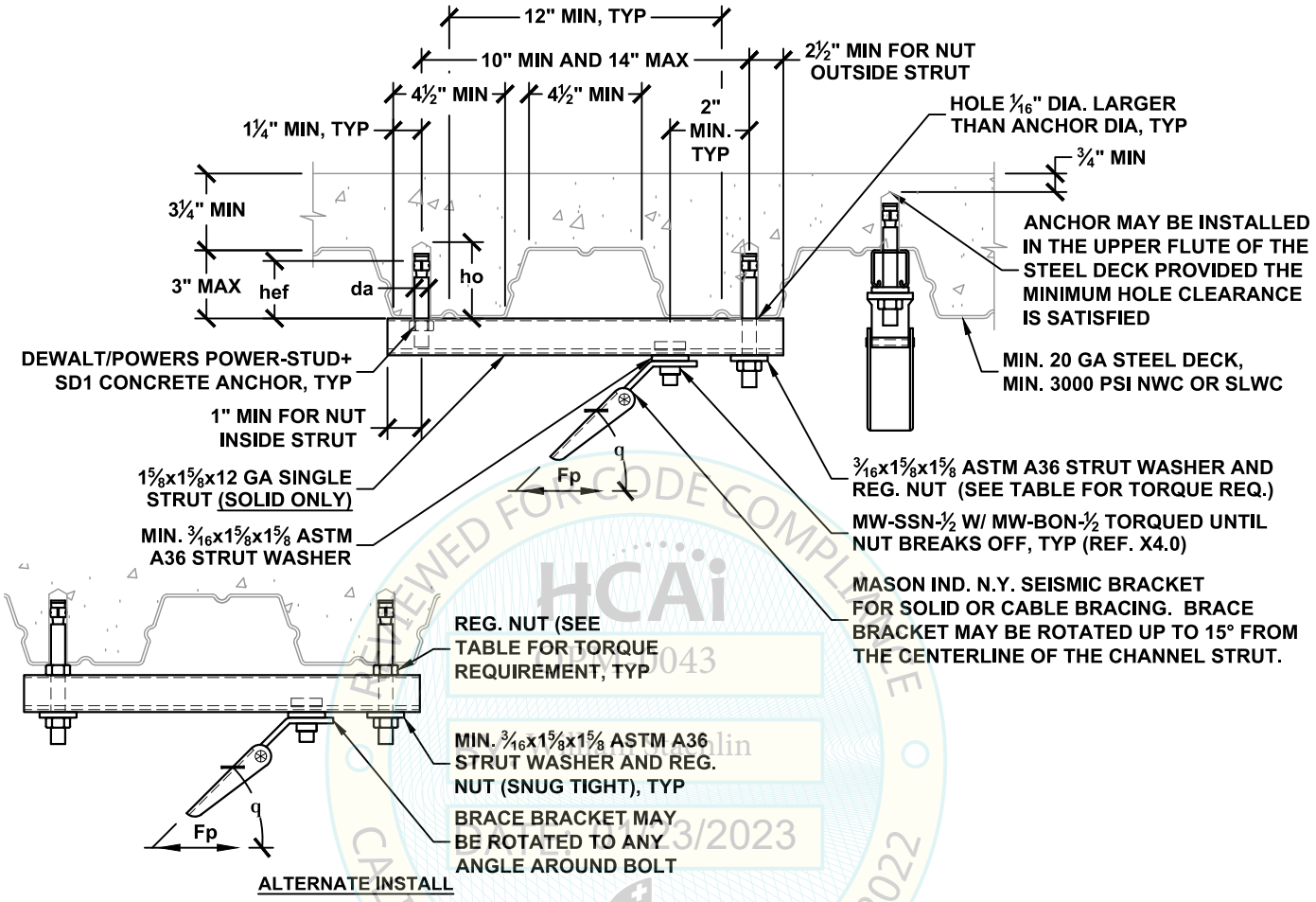

BRACE BRACKET ATTACHMENT TYPE	ALLOWABLE LATERAL LOAD Fp LBS	$\Omega_0 = 2.0^1$ BRACE BRACKET ATTACHMENT TYPE	$\Omega_0 = 2.0^1$ ALLOWABLE LATERAL LOAD Fp LBS	MAX BRACE RANGE q	DEWALT/POWERS POWER-STUD+ SD1 CONCRETE ANCHOR (ICC ESR-2818) SPECIAL INSPECTION REQ'D DIA. da INCH	MIN. EFF. EMBED. hef INCH	MIN. HOLE DEPTH ho INCH	MIN. SPACING Smin INCH	MIN. END DIST. Cmin INCH	TORQUE REQ'D FT-LBS
50A TO 50G	620	50A TO 50E	380	30°- 45°	½	2	2¾	6¾	3⅜	40
50A TO 50F	450	50A TO 50D	270	46°- 60°						

SEE DETAIL N0.00 FOR SECTION NOTES

[1] OVERSTRENGTH FACTOR AS REQUIRED FOR ANCHORAGE TO CONCRETE.

MASON WEST
1601 E. Miraloma Ave. Placentia, CA 92870
TEL (714) 630 - 0701, www.masonwest.com

Jiefu "Jeff" Zhang, SE
California SE No. S5270

PAGE
N2.31

REVIEWED FOR CODE COMPLIANCE
HCAi
OPM-0043
William Staehlin
1/23/2023
CALIFORNIA BUILDING CODE, 2022

SEISMIC BRACKET ATTACHMENT
TO CONCRETE FILLED METAL DECK
WITH (2) DEWALT/POWERS POWER-STUD+ SD1 CONCRETE ANCHORS

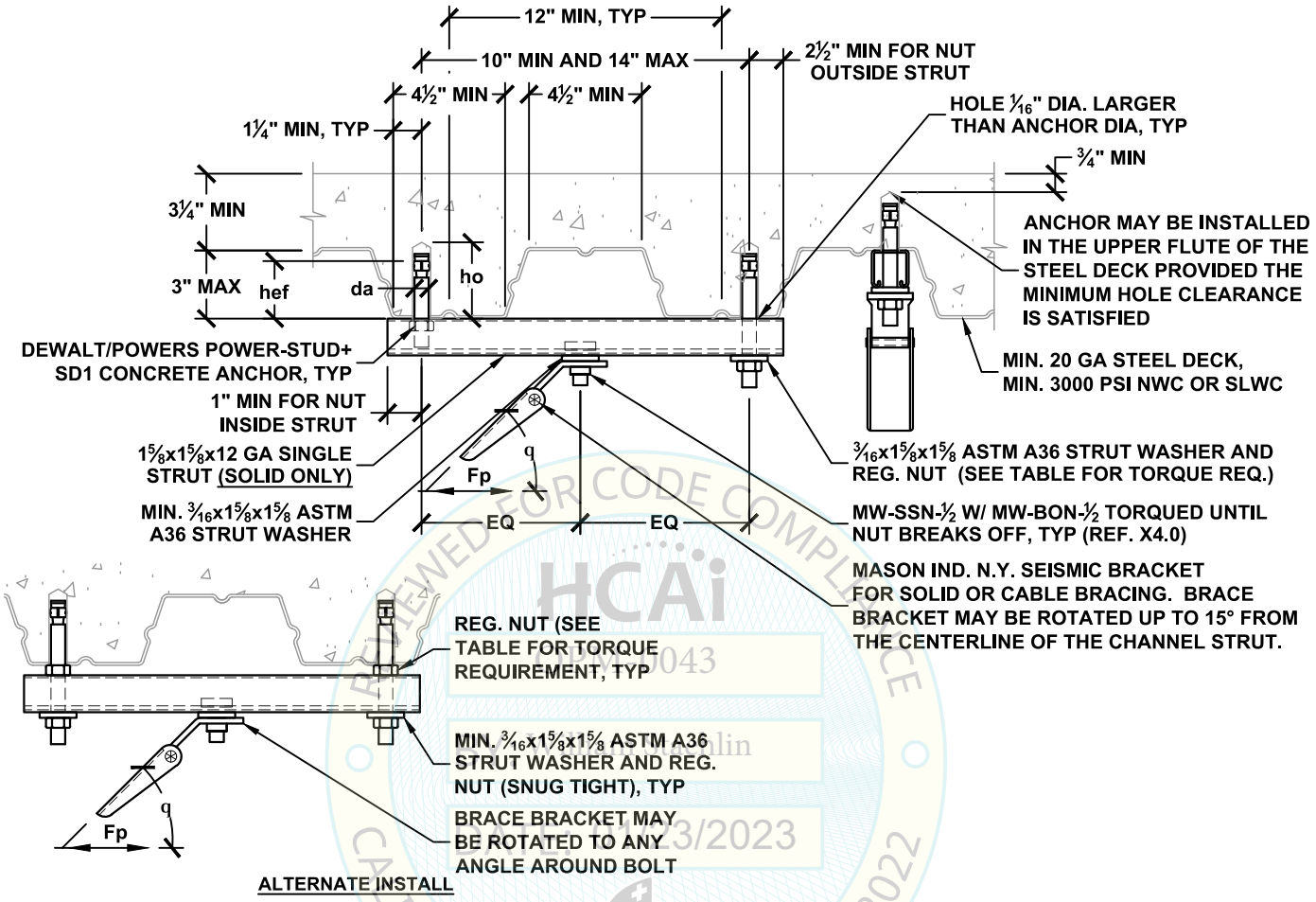

REVIEWED FOR CODE COMPLIANCE
HCAi
OPM-0043
William Staehlin
1/23/2023
CALIFORNIA BUILDING CODE, 2022

BRACE BRACKET ATTACHMENT TYPE	ALLOWABLE LATERAL LOAD Fp LBS	$\Omega_0 = 2.0^1$ BRACE BRACKET ATTACHMENT TYPE	ALLOWABLE LATERAL LOAD Fp LBS	MAX BRACE RANGE q	DEWALT/POWERS POWER-STUD+ SD1 CONCRETE ANCHOR (ICC ESR-2818) SPECIAL INSPECTION REQ'D DIA. da INCH	MIN. EFF. EMBED. hef INCH	MIN. HOLE DEPTH ho INCH	MIN. SPACING Smin INCH	MIN. END DIST. Cmin INCH	TORQUE REQ'D FT-LBS
50A TO 50G	620	50A TO 50G	620	30°- 45°	½	2	2¾	6¾	3⅜	40
50A TO 50F	530	50A TO 50F	470	46°- 60°						

SEE DETAIL N0.00 FOR SECTION NOTES

[1] OVERSTRENGTH FACTOR AS REQUIRED FOR ANCHORAGE TO CONCRETE.

MASON WEST
1601 E. Miraloma Ave. Placentia, CA 92870
TEL (714) 630 - 0701, www.masonwest.com

Jiefu "Jeff" Zhang, SE
California SE No. S5270

PAGE
N2.31.1

SEISMIC BRACKET ATTACHMENT
TO CONCRETE FILLED METAL DECK
WITH (2) DEWALT/POWERS POWER-STUD+ SD1 CONCRETE ANCHORS

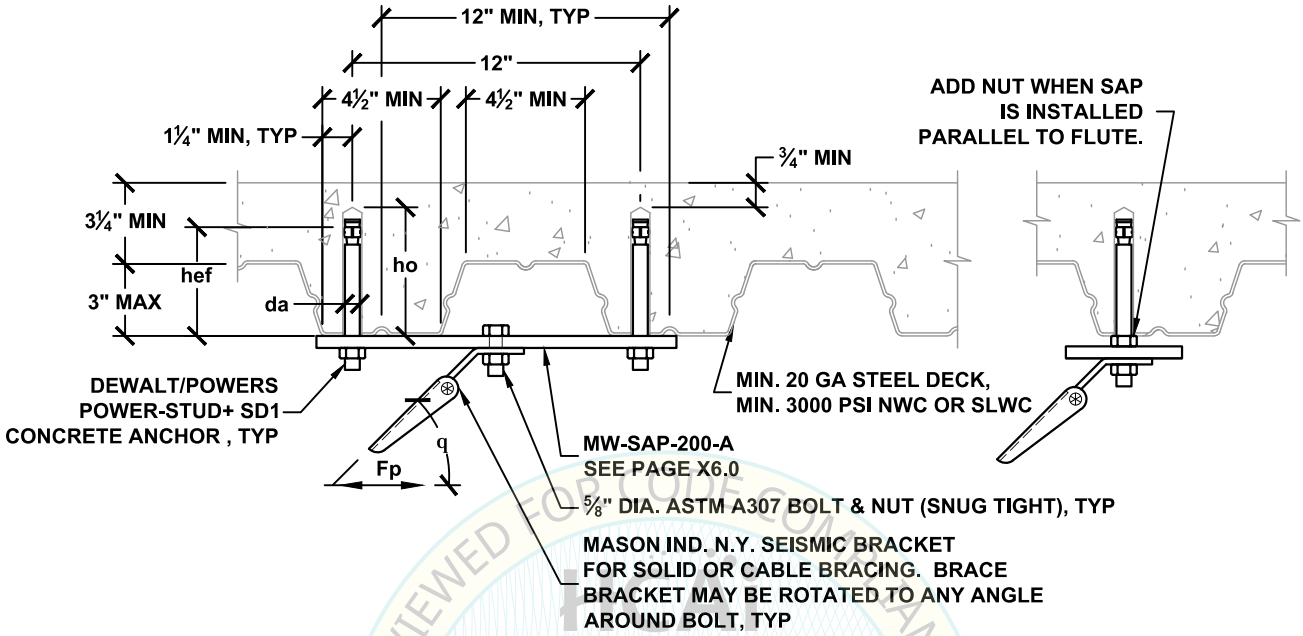

REVIEWED FOR CODE COMPLIANCE
CALIFORNIA BUILDING CODE, 2022
OPM-0043
BY: William Staehlin
DATE: 01/23/2023

BRACE BRACKET ATTACHMENT TYPE	ALLOWABLE LATERAL LOAD Fp LBS	$\Omega_0 = 2.0^1$ BRACE BRACKET ATTACHMENT TYPE	$\Omega_0 = 2.0^1$ ALLOWABLE LATERAL LOAD Fp LBS	MAX BRACE RANGE q	DEWALT/POWERS POWER-STUD+ SD1 CONCRETE ANCHOR (ICC ESR-2818) SPECIAL INSPECTION REQ'D MIN. DIA. da INCH	MIN. EFF. EMBED. hef INCH	MIN. HOLE DEPTH ho INCH	MIN. SPACING Smin INCH	MIN. END DIST. Cmin INCH	TORQUE REQ'D FT-LBS
63A TO 63K	1080	63A TO 63G	690	30°- 45°	⅝	2¾	3¾	8¼	4⅛	80
63A TO 63G	620	63A TO 63F	460	46°- 60°						

SEE DETAIL N0.00 FOR SECTION NOTES
[1] OVERSTRENGTH FACTOR AS REQUIRED FOR ANCHORAGE TO CONCRETE.

MASON WEST
1601 E. Miraloma Ave. Placentia, CA 92870
TEL (714) 630 - 0701, www.masonwest.com

Jiefu "Jeff" Zhang, SE
California SE No. S5270

PAGE
N2.32

SEISMIC BRACKET ATTACHMENT
TO CONCRETE FILLED METAL DECK
WITH (4) DEWALT/POWERS POWER-STUD+ SD1 CONCRETE ANCHORS

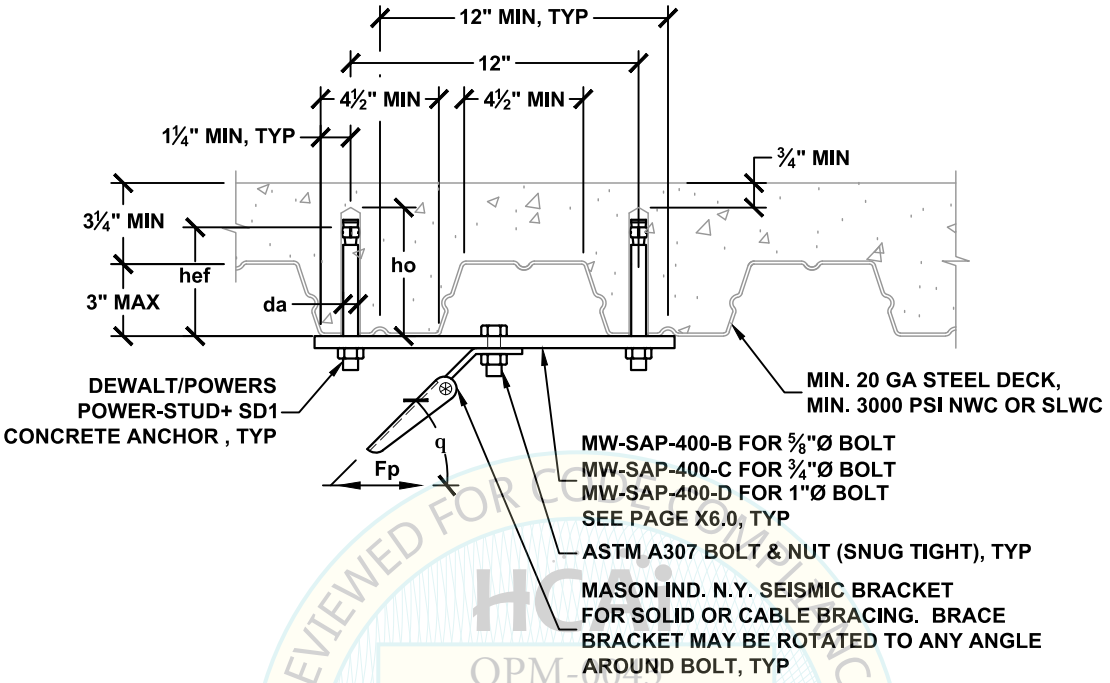

REVIEWED FOR CODE COMPLIANCE
CALIFORNIA BUILDING CODE, 2022
HCAI
OPM-0043
BY: William Staehlin
DATE: 01/23/2023

BRACE BRACKET ATTACHMENT TYPE	ALLOWABLE LATERAL LOAD Fp LBS	Ω_0 = 2.0[1] BRACE BRACKET ATTACHMENT TYPE	Ω_0 = 2.0[1] ALLOWABLE LATERAL LOAD Fp LBS	MAX BRACE RANGE q	BOLT DIA. INCH	DEWALT/POWERS POWER-STUD+ SD1 CONCRETE ANCHOR (ICC ESR-2818) SPECIAL INSPECTION REQ'D DIA. da INCH	MIN. EFF. EMBED. hef INCH	MIN. HOLE DEPTH ho INCH	MIN. SPACING Smin INCH	MIN. END DIST. Cmin INCH	TORQUE REQ'D FT-LBS
63A TO 63N	2320	63A TO 63L	1390	30°- 45°	⅝	⅝	2¾	3¾	8¼	4⅛	80
63A TO 63L	1520	63A TO 63J	910	46°- 60°	⅝						
75A TO 75N	2320	75A TO 75L	1390	30°- 45°	¾						
75A TO 75L	1520	75A TO 75J	910	46°- 60°	¾						
100A TO 100N	2320	100A TO 100L	1390	30°- 45°	1						
100A TO 100L	1520	100A TO 100J	910	46°- 60°	1						

SEE DETAIL N0.00 FOR SECTION NOTES

[1] OVERSTRENGTH FACTOR AS REQUIRED FOR ANCHORAGE TO CONCRETE.

MASON WEST
1601 E. Miraloma Ave. Placentia, CA 92870
TEL (714) 630 - 0701, www.masonwest.com

Jiefu "Jeff" Zhang, SE
California SE No. S5270

PAGE
N2.33

SEISMIC BRACKET ATTACHMENT
TO CONCRETE FILLED METAL DECK
WITH (1) DEWALT/POWERS POWER-STUD+ SD1 CONCRETE ANCHOR

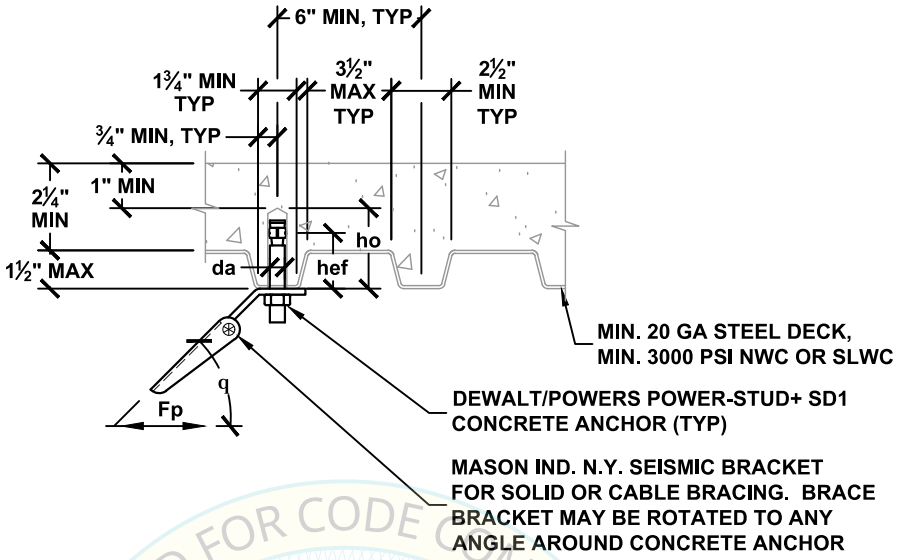

REVIEWED FOR CODE COMPLIANCE
HCAi
OPM-0043
BY: William Staehlin
DATE: 01/23/2023
CALIFORNIA BUILDING CODE 2022

BRACE BRACKET ATTACHMENT TYPE	ALLOWABLE LATERAL LOAD Fp LBS	$\Omega_0 = 2.0^1$ BRACE BRACKET ATTACHMENT TYPE	ALLOWABLE LATERAL LOAD Fp LBS	MAX BRACE RANGE q	DEWALT/POWERS POWER-STUD+ SD1 CONCRETE ANCHOR (ICC ESR-2818) SPECIAL INSPECTION REQ'D DIA. da INCH	MIN. EFF. EMBED. hef INCH	MIN. HOLE DEPTH ho INCH	MIN. SPACING Smin INCH	MIN. END DIST. Cmin INCH	TORQUE REQ'D FT-LBS
38A TO 38C	180	38A TO 38C	200	30°- 45°	⅜	2	2⅝	6	3	20
38A TO 38A	110	38A TO 38B	130	46°- 60°						
50A TO 50C	220	50A TO 50D	250	30°- 45°	½	2	2¾	6	3	40
50A TO 50B	130	50A TO 50B	160	46°- 60°						

SEE DETAIL N0.00 FOR SECTION NOTES

[1] OVERSTRENGTH FACTOR AS REQUIRED FOR ANCHORAGE TO CONCRETE.

MASON WEST
1601 E. Miraloma Ave. Placentia, CA 92870
TEL (714) 630 - 0701, www.masonwest.com

Jiefu "Jeff" Zhang, SE
California SE No. S5270

PAGE
N2.34

SEISMIC BRACKET ATTACHMENT
TO CONCRETE FILLED METAL DECK
WITH (2) DEWALT/POWERS POWER-STUD+ SD1 CONCRETE ANCHORS

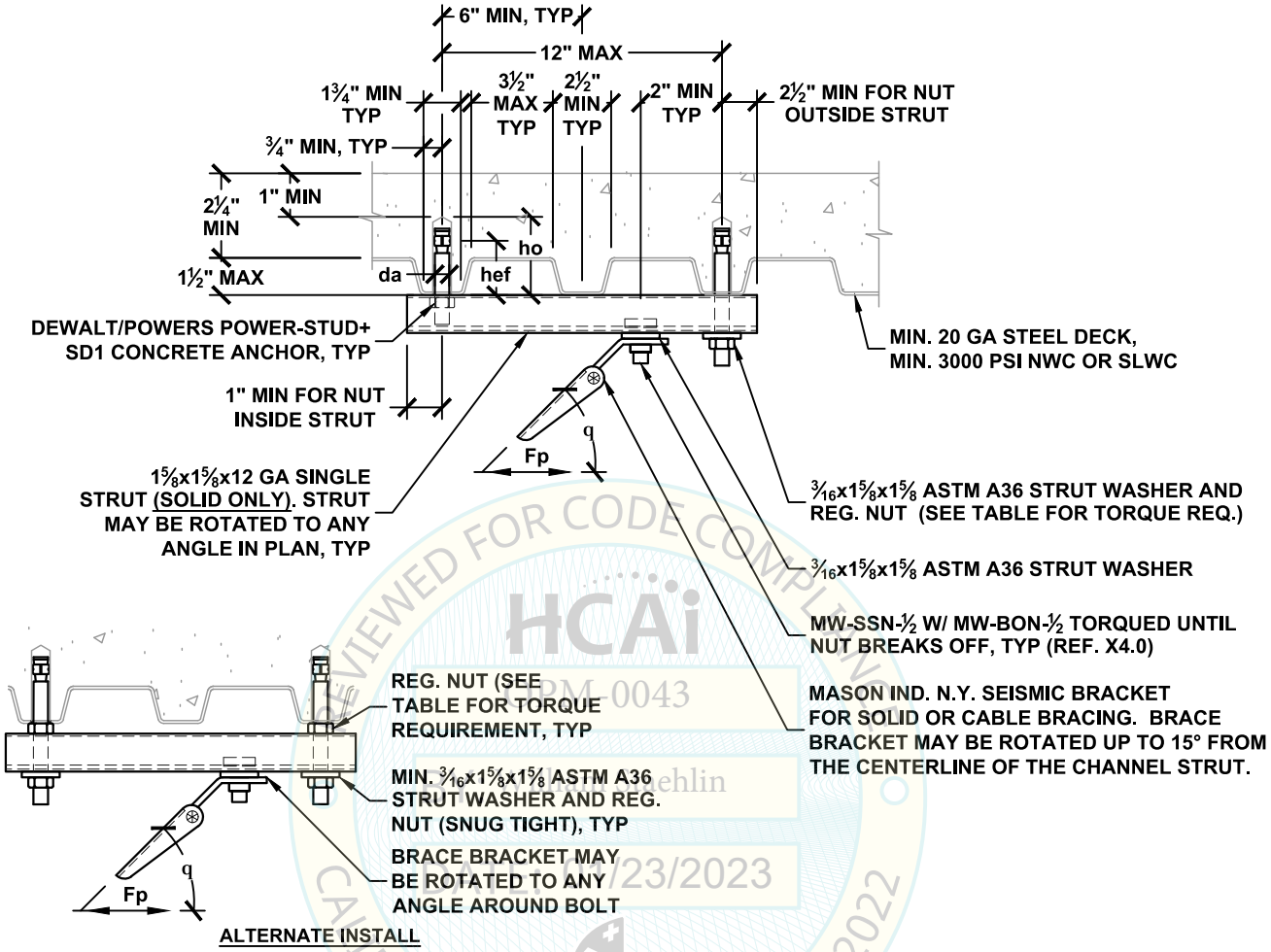

REVIEWED FOR CODE COMPLIANCE
HCAi
OPM-0043
William Staehlin
1/23/2023
CALIFORNIA BUILDING CODE, 2022

BRACE BRACKET ATTACHMENT TYPE	ALLOWABLE LATERAL LOAD Fp LBS	$\Omega_0 = 2.0$[1] BRACE BRACKET ATTACHMENT TYPE	ALLOWABLE LATERAL LOAD Fp LBS	MAX BRACE RANGE q	DEWALT/POWERS POWER-STUD+ SD1 CONCRETE ANCHOR (ICC ESR-2818) SPECIAL INSPECTION REQ'D DIA. da INCH	MIN. EFF. EMBED. hef INCH	MIN. HOLE DEPTH ho INCH	MIN. SPACING Smin INCH	MIN. END DIST. Cmin INCH	TORQUE REQ'D FT-LBS
50A TO 50F	450	50A TO 50D	270	30°- 45°	½	2	2¾	6	3	40
50A TO 50D	300	50A TO 50C	180	46°- 60°						

SEE DETAIL N0.00 FOR SECTION NOTES

[1] OVERSTRENGTH FACTOR AS REQUIRED FOR ANCHORAGE TO CONCRETE.

MASON WEST
1601 E. Miraloma Ave. Placentia, CA 92870
TEL (714) 630 - 0701, www.masonwest.com

Jiefu "Jeff" Zhang, SE
California SE No. S5270

PAGE
N2.35

SEISMIC BRACKET ATTACHMENT
TO CONCRETE FILLED METAL DECK
WITH (2) DEWALT/POWERS POWER-STUD+ SD1 CONCRETE ANCHORS

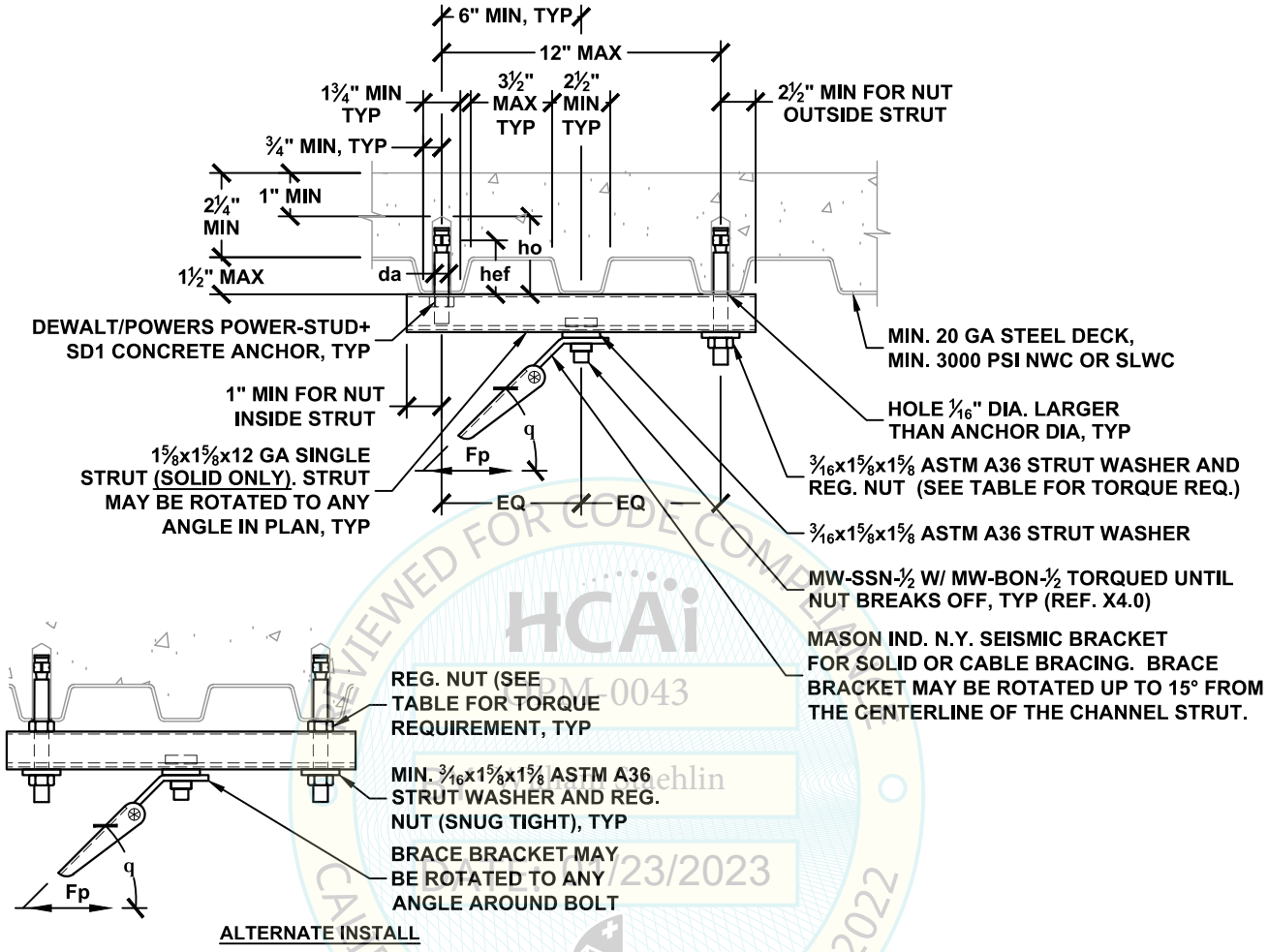

REVIEWED FOR CODE COMPLIANCE
HCAi
OPM-0043
William Staehlin
1/23/2023
CALIFORNIA BUILDING CODE, 2022

BRACE BRACKET ATTACHMENT TYPE	ALLOWABLE LATERAL LOAD Fp LBS	$\Omega_0 = 2.0$[1] BRACE BRACKET ATTACHMENT TYPE	$\Omega_0 = 2.0$[1] ALLOWABLE LATERAL LOAD Fp LBS	MAX BRACE RANGE q	DEWALT/POWERS POWER-STUD+ SD1 CONCRETE ANCHOR (ICC ESR-2818) SPECIAL INSPECTION REQ'D DIA. da INCH	MIN. EFF. EMBED. hef INCH	MIN. HOLE DEPTH ho INCH	MIN. SPACING Smin INCH	MIN. END DIST. Cmin INCH	TORQUE REQ'D FT-LBS
50A TO 50G	620	50A TO 50F	500	30°- 45°	½	2	2¾	6	3	40
50A TO 50F	530	50A TO 50D	330	46°- 60°						

SEE DETAIL N0.00 FOR SECTION NOTES

[1] OVERSTRENGTH FACTOR AS REQUIRED FOR ANCHORAGE TO CONCRETE.

MASON WEST
1601 E. Miraloma Ave. Placentia, CA 92870
TEL (714) 630 - 0701, www.masonwest.com

Jiefu "Jeff" Zhang, SE
California SE No. S5270

PAGE
N2.35.1

SEISMIC BRACKET ATTACHMENT TO CONCRETE FILLED METAL DECK WITH (1) MASON IND. N.Y. SAS(E) CONCRETE ANCHOR

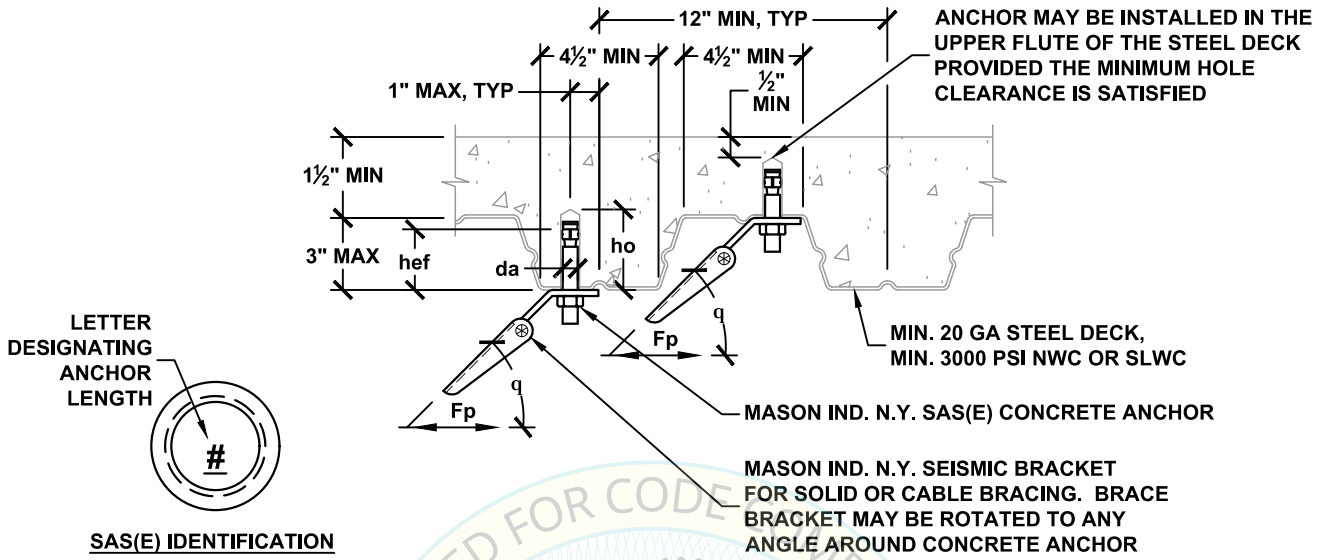

BRACE BRACKET ATTACHMENT TYPE	ALLOWABLE LATERAL LOAD Fp LBS	$\Omega_0 = 2.0^1$ BRACE BRACKET ATTACHMENT TYPE	$\Omega_0 = 2.0^1$ ALLOWABLE LATERAL LOAD Fp LBS	MAX BRACE RANGE q	MASON IND. N.Y. SAS(E) CONCRETE ANCHOR (ICC ESR-3037) SPECIAL INSPECTION REQ'D DIA. da INCH	MIN. EFF. EMBED. hef INCH	MIN. HOLE DEPTH ho INCH	MIN. SPACING Smin INCH	MIN. END DIST. Cmin INCH	TORQUE REQ'D FT-LBS
38A TO 38B	160	38A TO 38B	160	30°- 45°	⅜	1⅝	2⅛	6¾	3⅜	30
38A TO 38A	90	38A TO 38A	90	46°- 60°						
38A TO 38E	390	38A TO 38E	390	30°- 45°	⅜	3	3½	9	4½	30
38A TO 38C	230	38A TO 38C	230	46°- 60°						
50A TO 50D	280	50A TO 50D	280	30°- 45°	½	2¼	3	6¾	3⅜	60
50A TO 50B	170	50A TO 50B	170	46°- 60°						
50A TO 50E	420	50A TO 50E	420	30°- 45°	½	4	4¾	12	6	60
50A TO 50C	240	50A TO 50C	240	46°- 60°						
63A TO 63E	350	63A TO 63E	350	30°- 45°	⅝	2¾	3⅝	8¼	4⅛	90
63A TO 63C	210	63A TO 63C	210	46°- 60°						
63A TO 63H	730	63A TO 63H	730	30°- 45°	⅝	5	5⅞	15	7½	90
63A TO 63E	430	63A TO 63E	430	46°- 60°						
75A TO 75E	410	75A TO 75E	410	30°- 45°	¾	3⅜	4⅜	10⅛	5⅛	150
75A TO 75C	240	75A TO 75C	240	46°- 60°						

SEE DETAIL N0.00 FOR SECTION NOTES

[1] OVERSTRENGTH FACTOR AS REQUIRED FOR ANCHORAGE TO CONCRETE.

REVIEWED FOR CODE COMPLIANCE
HCAi
OPM-0043
BY: William Staehlin
DATE: 01/23/2023
CBC 2022 CRC 2022 CPC 2022 CMC 2022 CEBC 2022 CPBC 2022 CGBSC 2022 CRSC 2022 CRWC 2022 CRPC 2022 CRMC 2022 CRPC 2022 CRMC 2022 CRPC 2022 CRMC 2022

MASON WEST
1601 E. Miraloma Ave. Placentia, CA 92870
TEL (714) 630 - 0701, www.masonwest.com

Jiefu "Jeff" Zhang, SE
California SE No. S5270

PAGE
N2.40

SEISMIC BRACKET ATTACHMENT TO CONCRETE FILLED METAL DECK WITH (2) MASON IND. N.Y. SAS(E) CONCRETE ANCHORS

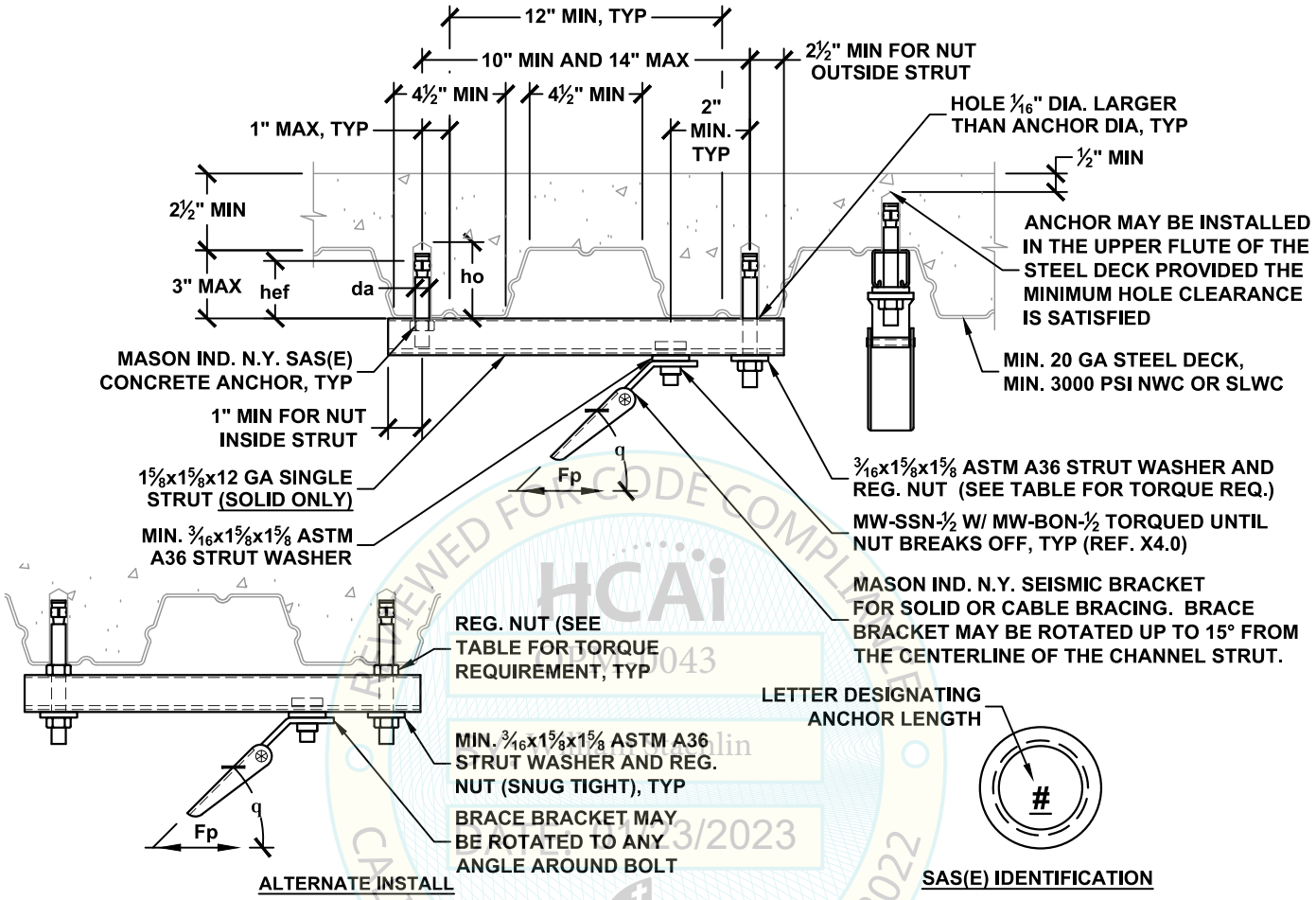

REVIEWED FOR CODE COMPLIANCE
HCAi
OPM-0043
William Staehlin
1/23/2023
CALIFORNIA BUILDING CODE, 2022

BRACE BRACKET ATTACHMENT TYPE	ALLOWABLE LATERAL LOAD Fp LBS	$\Omega_0 = 2.0^1$ BRACE BRACKET ATTACHMENT TYPE	$\Omega_0 = 2.0^1$ ALLOWABLE LATERAL LOAD Fp LBS	MAX BRACE RANGE q	MASON IND. N.Y. SAS(E) 2 CONCRETE ANCHOR (ICC ESR-3037) SPECIAL INSPECTION REQ'D DIA. da INCH	MIN. EFF. EMBED. hef INCH	MIN. HOLE DEPTH ho INCH	MIN. SPACING Smin INCH	MIN. END DIST. Cmin INCH	TORQUE REQ'D FT-LBS
50A TO 50G	620	50A TO 50F	490	30°- 45°	½	4	4¾	12	6	60
50A TO 50F	530	50A TO 50D	330	46°- 60°						

SEE DETAIL N0.00 FOR SECTION NOTES

[1] OVERSTRENGTH FACTOR AS REQUIRED FOR ANCHORAGE TO CONCRETE.

MASON WEST
1601 E. Miraloma Ave. Placentia, CA 92870
TEL (714) 630 - 0701, www.masonwest.com

Jiefu "Jeff" Zhang, SE
California SE No. S5270

PAGE
N2.41

SEISMIC BRACKET ATTACHMENT TO CONCRETE FILLED METAL DECK WITH (2) MASON IND. N.Y. SAS(E) CONCRETE ANCHORS

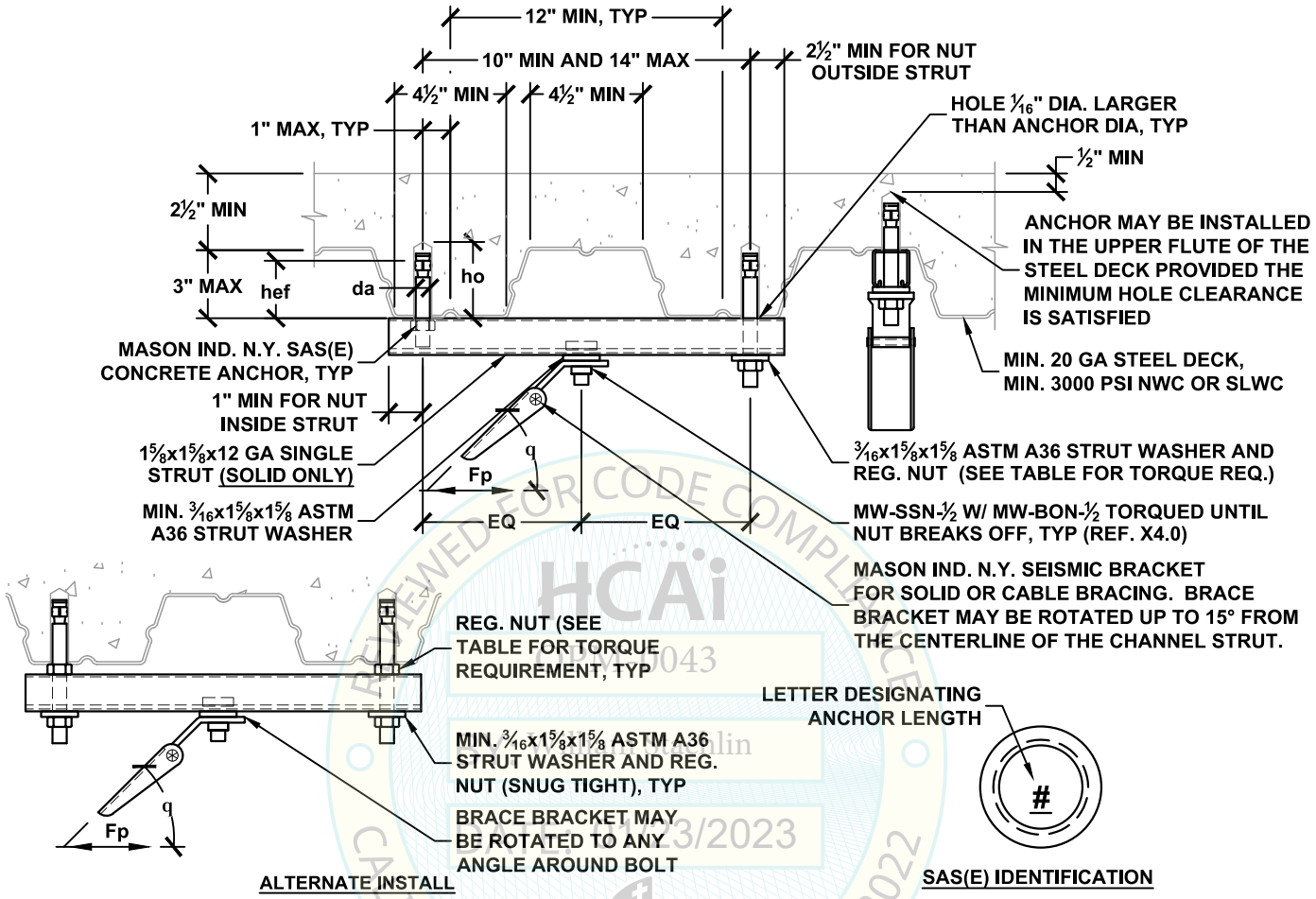

BRACE BRACKET ATTACHMENT TYPE	ALLOWABLE LATERAL LOAD Fp LBS	$\Omega_0 = 2.0^1$ BRACE BRACKET ATTACHMENT TYPE	ALLOWABLE LATERAL LOAD Fp LBS	MAX BRACE RANGE q	MASON IND. N.Y. SAS(E) 2 CONCRETE ANCHOR (ICC ESR-3037) SPECIAL INSPECTION REQ'D DIA. da INCH	MIN. EFF. EMBED. hef INCH	MIN. HOLE DEPTH ho INCH	MIN. SPACING Smin INCH	MIN. END DIST. Cmin INCH	TORQUE REQ'D FT-LBS
50A TO 50G	620	50A TO 50G	620	30°- 45°	½	4	4¾	12	6	60
50A TO 50F	530	50A TO 50F	530	46°- 60°						

SEE DETAIL N0.00 FOR SECTION NOTES

[1] OVERSTRENGTH FACTOR AS REQUIRED FOR ANCHORAGE TO CONCRETE.

MASON WEST
1601 E. Miraloma Ave. Placentia, CA 92870
TEL (714) 630 - 0701, www.masonwest.com

Jiefu "Jeff" Zhang, SE
California SE No. S5270

PAGE
N2.41.1

REVIEWED FOR CODE COMPLIANCE CALIFORNIA BUILDING CODE, 2022
HCAi
OPM-0043
William Staehlin
1/23/2023

SEISMIC BRACKET ATTACHMENT TO CONCRETE FILLED METAL DECK WITH (2) MASON IND. N.Y. SAS(E) CONCRETE ANCHORS

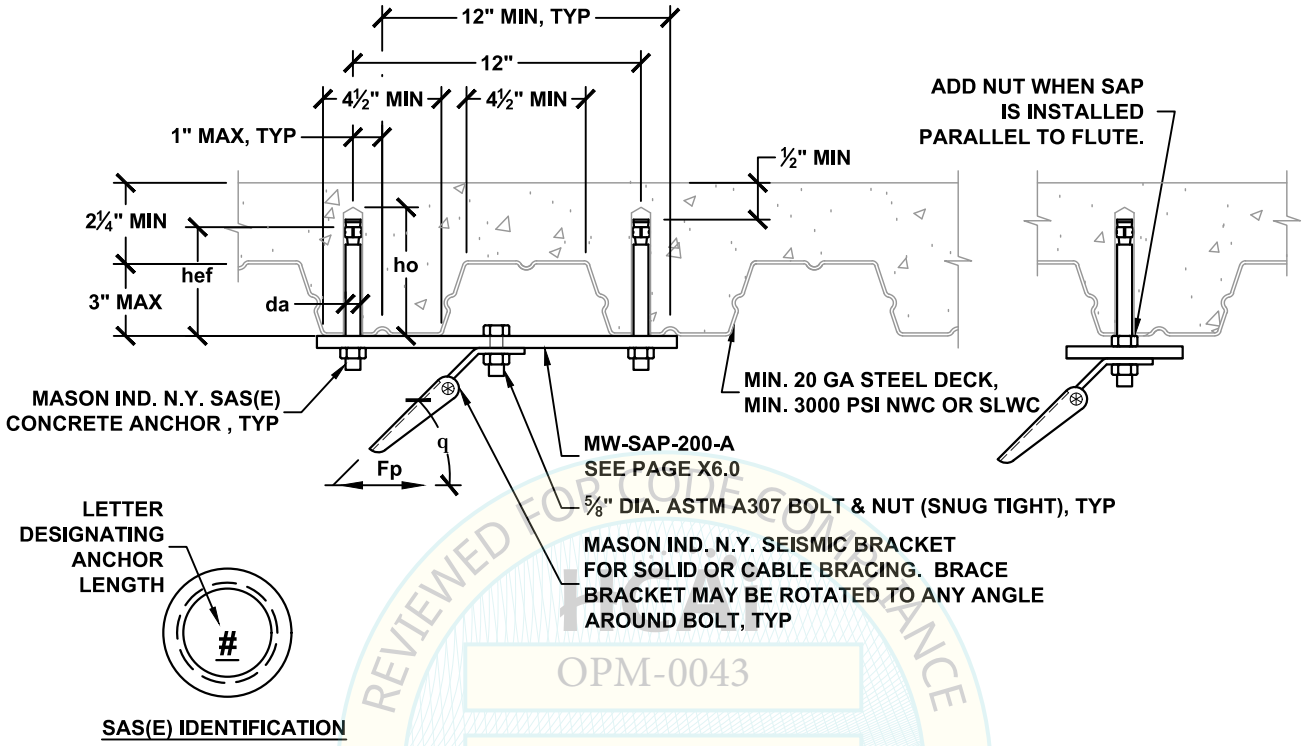

REVIEWED FOR CODE COMPLIANCE
CALIFORNIA BUILDING CODE, 2022
OPM-0043
BY: William Staehlin
DATE: 01/23/2023

BRACE BRACKET ATTACHMENT TYPE	ALLOWABLE LATERAL LOAD Fp LBS	$\Omega_0 = 2.0^1$ BRACE BRACKET ATTACHMENT TYPE	ALLOWABLE LATERAL LOAD Fp LBS	MAX BRACE RANGE q	MASON IND. N.Y. SAS(E) CONCRETE ANCHOR (ICC ESR-3037) SPECIAL INSPECTION REQ'D DIA. da INCH	MIN. EFF. EMBED. hef INCH	MIN. HOLE DEPTH ho INCH	MIN. SPACING Smin INCH	MIN. END DIST. Cmin INCH	TORQUE REQ'D FT-LBS
63A TO 63K	1080	63A TO 63K	1080	30°- 45°	⅝	2¾	3⅝	8¼	4⅛	90
63A TO 63G	620	63A TO 63G	620	46°- 60°						

SEE DETAIL N0.00 FOR SECTION NOTES

[1] OVERSTRENGTH FACTOR AS REQUIRED FOR ANCHORAGE TO CONCRETE.

MASON WEST
1601 E. Miraloma Ave. Placentia, CA 92870
TEL (714) 630 - 0701, www.masonwest.com

Jiefu "Jeff" Zhang, SE
California SE No. S5270

PAGE
N2.42

SEISMIC BRACKET ATTACHMENT TO CONCRETE FILLED METAL DECK WITH (4) MASON IND. N.Y. SAS(E) CONCRETE ANCHORS

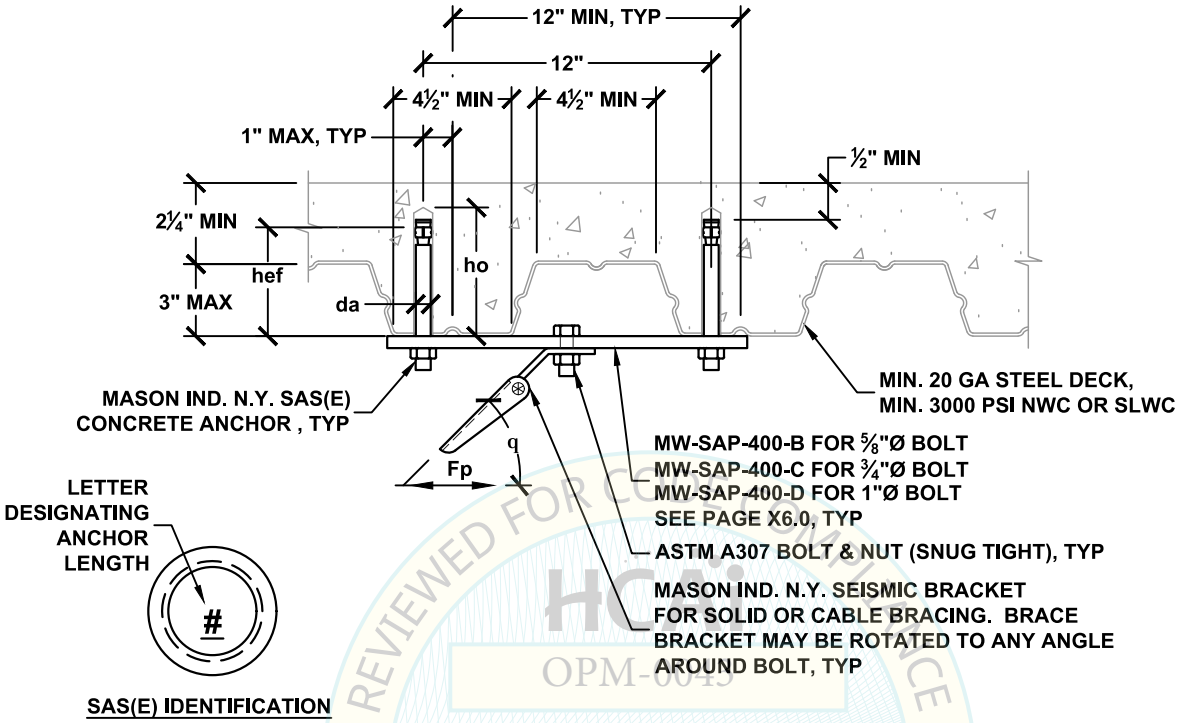

REVIEWED FOR CODE COMPLIANCE
HCAI
OPM-0043
BY: William Staehlin
DATE: 01/23/2023
CALIFORNIA BUILDING CODE, 2022

BRACE BRACKET ATTACHMENT TYPE	ALLOWABLE LATERAL LOAD Fp LBS	Ω_0 = 2.0[1] BRACE BRACKET ATTACHMENT TYPE	Ω_0 = 2.0[1] ALLOWABLE LATERAL LOAD Fp LBS	MAX BRACE RANGE q	BOLT DIA. INCH	MASON IND. N.Y. SAS(E) CONCRETE ANCHOR (ICC ESR-3037) SPECIAL INSPECTION REQ'D DIA. da INCH	MIN. EFF. EMBED. hef INCH	MIN. HOLE DEPTH ho INCH	MIN. SPACING Smin INCH	MIN. END DIST. Cmin INCH	TORQUE REQ'D FT-LBS
63A TO 63N	2350	63A TO 63L	1410	30°- 45°	⅝	⅝	2¾	3⅝	8¼	4⅛	90
63A TO 63M	1680	63A TO 63K	1010	46°- 60°	⅝						
75A TO 75N	2350	75A TO 75L	1410	30°- 45°	¾						
75A TO 75M	1680	75A TO 75K	1010	46°- 60°	¾						
100A TO 100N	2350	100A TO 100L	1410	30°- 45°	1						
100A TO 100M	1680	100A TO 100K	1010	46°- 60°	1						

SEE DETAIL N0.00 FOR SECTION NOTES

[1] OVERSTRENGTH FACTOR AS REQUIRED FOR ANCHORAGE TO CONCRETE.

MASON WEST
1601 E. Miraloma Ave. Placentia, CA 92870
TEL (714) 630 - 0701, www.masonwest.com

Jiefu "Jeff" Zhang, SE
California SE No. S5270

PAGE
N2.43

SEISMIC BRACKET ATTACHMENT
TO CONCRETE FILLED METAL DECK
WITH (1) DEWALT/POWERS POWER-STUD+ SD2 CONCRETE ANCHOR

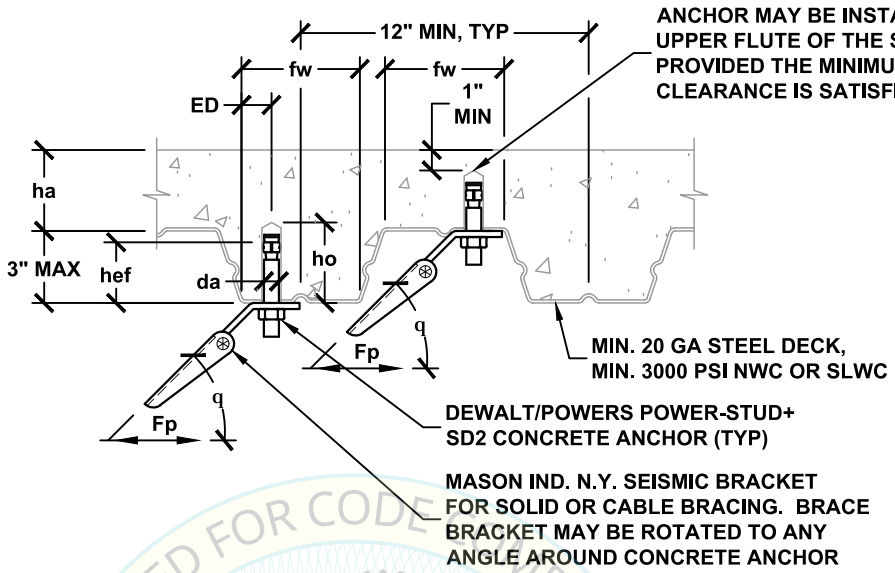

MIN FLUTE WIDTH fw INCH	MIN EDGE DIST ED INCH	MIN CONC. COVER ha INCH
3⅞	1	2
4½	1¼	3¼

BRACE BRACKET ATTACHMENT TYPE	ALLOWABLE LATERAL LOAD Fp LBS	$\Omega_0 = 2.0^1$ BRACE BRACKET ATTACHMENT TYPE	$\Omega_0 = 2.0^1$ ALLOWABLE LATERAL LOAD Fp LBS	MAX BRACE RANGE q	DEWALT/POWERS POWER-STUD+ SD2 CONCRETE ANCHOR (ICC ESR-2502) SPECIAL INSPECTION REQ'D DIA. da INCH	MIN. EFF. EMBED. hef INCH	MIN. HOLE DEPTH ho INCH	MIN. SPACING Smin INCH	MIN. END DIST. Cmin INCH	TORQUE REQ'D FT-LBS
38A TO 38C	210	38A TO 38C	210	30°- 45°	⅜	2	2⅝	MAX OF: 3*hef OR 1.5*FLUTE WIDTH	3⅜	20
38A TO 38A	120	38A TO 38A	120	46°- 60°						
50A TO 50C	230	50A TO 50C	230	30°- 45°	½	2	2¾		3⅜	40
50A TO 50B	130	50A TO 50B	130	46°- 60°						
50A TO 50E	410	50A TO 50E	410	30°- 45°	½	3¼	4		4⅞	40
50A TO 50C	230	50A TO 50C	230	46°- 60°						
63A TO 63E	420	63A TO 63E	410	30°- 45°	⅝	3¼	4¼		3⅜	60
63A TO 63D	260	63A TO 63D	260	46°- 60°						
63A TO 63G	670	63A TO 63G	650	30°- 45°	⅝	4¼	5¼		3⅜	60
63A TO 63E	410	63A TO 63E	410	46°- 60°						
FOR fw ≥ 4½"										
75A TO 75F	450	75A TO 75E	440	30°- 45°	¾	3¾	5	11¼	4⅞	110
75A TO 75D	280	75A TO 75D	280	46°- 60°						

SEE DETAIL N0.00 FOR SECTION NOTES

[1] OVERSTRENGTH FACTOR AS REQUIRED FOR ANCHORAGE TO CONCRETE.

REVIEWED FOR CODE COMPLIANCE
HCAi
OPM-0043
BY: William Staehlin
DATE: 01/23/2023
CALIFORNIA BUILDING CODE 2022

MASON WEST
1601 E. Miraloma Ave. Placentia, CA 92870
TEL (714) 630 - 0701, www.masonwest.com

Jiefu "Jeff" Zhang, SE
California SE No. S5270

PAGE
N2.60

SEISMIC BRACKET ATTACHMENT TO CONCRETE FILLED METAL DECK WITH (2) DEWALT/POWERS POWER-STUD+ SD2 CONCRETE ANCHORS

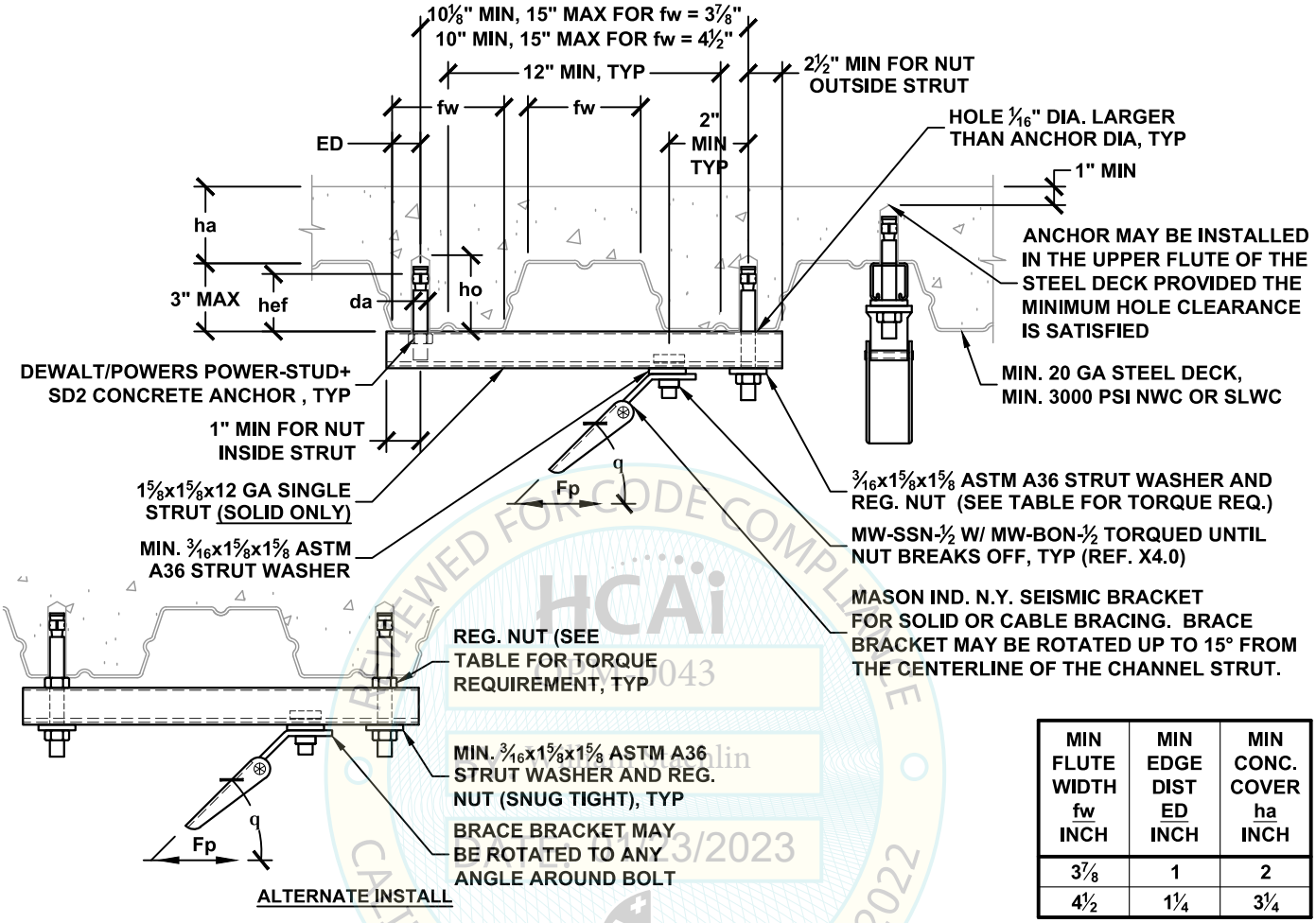

MIN FLUTE WIDTH fw INCH	MIN EDGE DIST ED INCH	MIN CONC. COVER ha INCH
3⅞	1	2
4½	1¼	3¼

BRACE BRACKET ATTACHMENT TYPE	ALLOWABLE LATERAL LOAD Fp LBS	$\Omega_0 = 2.0^1$ BRACE BRACKET ATTACHMENT TYPE	ALLOWABLE LATERAL LOAD Fp LBS	MAX BRACE RANGE q	DEWALT/POWERS POWER-STUD+ SD2 CONCRETE ANCHOR (ICC ESR-2502) SPECIAL INSPECTION REQ'D DIA. da INCH	MIN. EFF. EMBED. hef INCH	MIN. HOLE DEPTH ho INCH	MIN. SPACING Smin INCH	MIN. END DIST. Cmin INCH	TORQUE REQ'D FT-LBS
50A TO 50E	410	50A TO 50C	240	30°- 45°	⅜	2	2⅝	MAX OF: 3*hef OR 1.5*FLUTE WIDTH	3⅜	20
50A TO 50D	280	50A TO 50B	170	46°- 60°						
50A TO 50G	620	50A TO 50F	480	30°- 45°	½	3¼	4		4⅞	40
50A TO 50F	530	50A TO 50D	330	46°- 60°						

SEE DETAIL N0.00 FOR SECTION NOTES

[1] OVERSTRENGTH FACTOR AS REQUIRED FOR ANCHORAGE TO CONCRETE.

MASON WEST
1601 E. Miraloma Ave. Placentia, CA 92870
TEL (714) 630 - 0701, www.masonwest.com

Jiefu "Jeff" Zhang, SE
California SE No. S5270

PAGE
N2.61

REVIEWED FOR CODE COMPLIANCE
HCAi
OPM-0043
William Staehlin
1/23/2023
CALIFORNIA BUILDING CODE 2022

SEISMIC BRACKET ATTACHMENT
TO CONCRETE FILLED METAL DECK
WITH (2) DEWALT/POWERS POWER-STUD+ SD2 CONCRETE ANCHORS

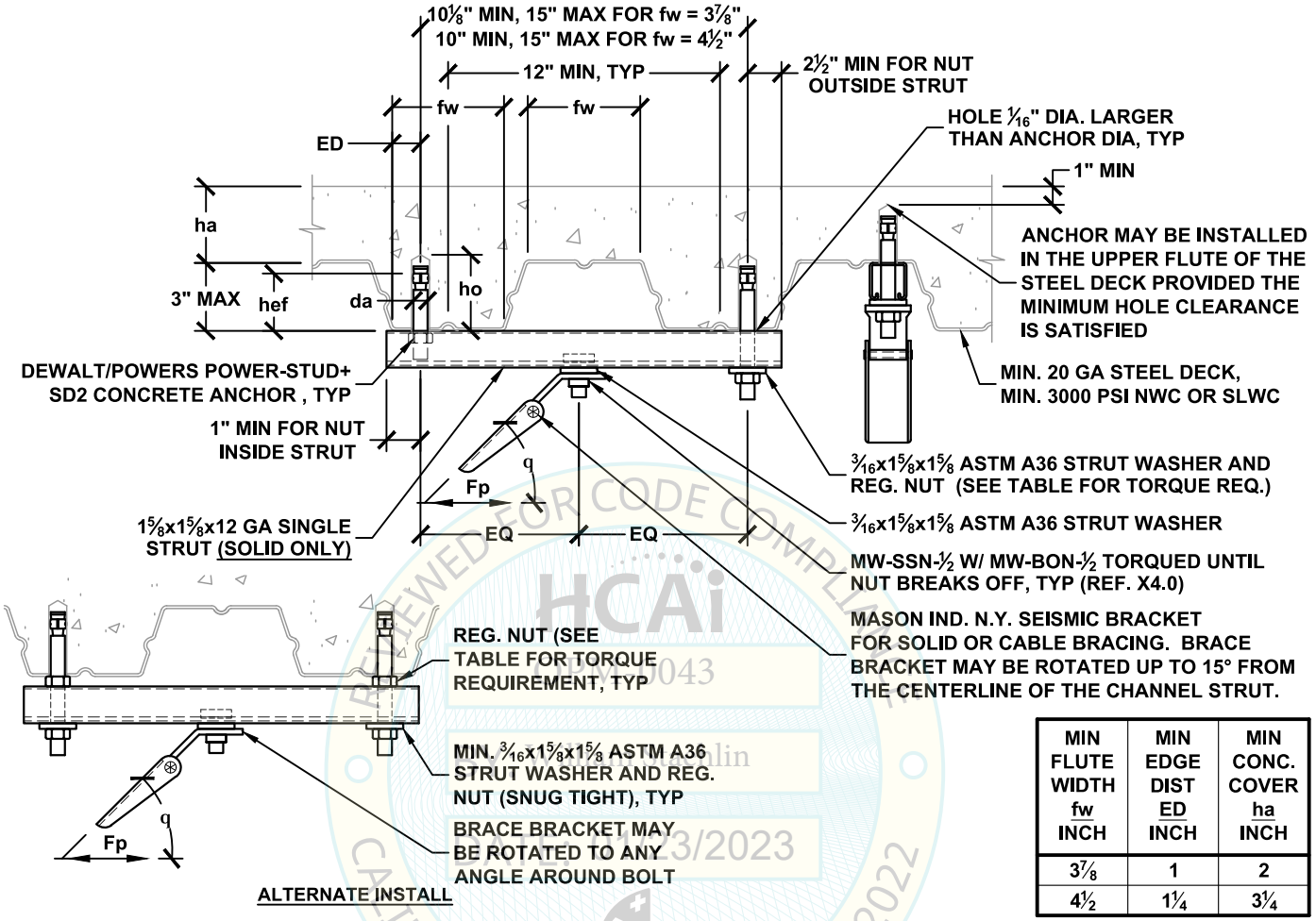

MIN FLUTE WIDTH fw INCH	MIN EDGE DIST ED INCH	MIN CONC. COVER ha INCH
3⅞	1	2
4½	1¼	3¼

BRACE BRACKET ATTACHMENT TYPE	ALLOWABLE LATERAL LOAD Fp LBS	Ω_0 = 2.0[1] BRACE BRACKET ATTACHMENT TYPE	ALLOWABLE LATERAL LOAD Fp LBS	MAX BRACE RANGE q	DEWALT/POWERS POWER-STUD+ SD2 CONCRETE ANCHOR (ICC ESR-2502) SPECIAL INSPECTION REQ'D DIA. da INCH	MIN. EFF. EMBED. hef INCH	MIN. HOLE DEPTH ho INCH	MIN. SPACING Smin INCH	MIN. END DIST. Cmin INCH	TORQUE REQ'D FT-LBS
50A TO 50G	620	50A TO 50E	430	30°- 45°	⅜	2	2⅝	MAX OF: 3*hef OR 1.5*FLUTE WIDTH	3⅜	20
50A TO 50F	500	50A TO 50D	300	46°- 60°						
50A TO 50G	620	50A TO 50G	620	30°- 45°	½	3¼	4		4⅞	40
50A TO 50F	530	50A TO 50F	530	46°- 60°						

SEE DETAIL N0.00 FOR SECTION NOTES

[1] OVERSTRENGTH FACTOR AS REQUIRED FOR ANCHORAGE TO CONCRETE.

MASON WEST
1601 E. Miraloma Ave. Placentia, CA 92870
TEL (714) 630 - 0701, www.masonwest.com

Jiefu "Jeff" Zhang, SE
California SE No. S5270

PAGE
N2.61.1

REVIEWED FOR CODE COMPLIANCE
HCAi
OPM-0043
William Staehlin
1/23/2023
CALIFORNIA BUILDING CODE 2022

SEISMIC BRACKET ATTACHMENT
TO CONCRETE FILLED METAL DECK
WITH (2) DEWALT/POWERS POWER-STUD+ SD2 CONCRETE ANCHORS

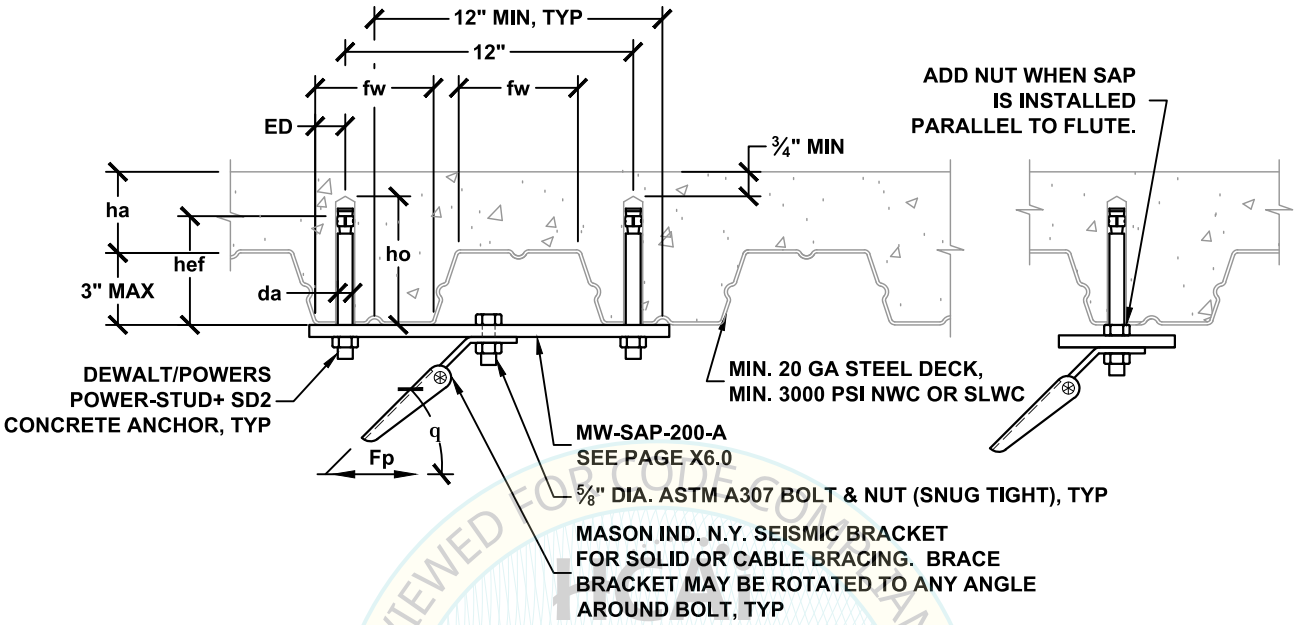

REVIEWED FOR CODE COMPLIANCE
CALIFORNIA BUILDING CODE, 2022
OPM-0043
BY: William Staehlin
DATE: 01/23/2023

MIN FLUTE WIDTH fw INCH	MIN EDGE DIST ED INCH	MIN CONC. COVER ha INCH
3⅞	1	2
4½	1¼	3¼

BRACE BRACKET ATTACHMENT TYPE	ALLOWABLE LATERAL LOAD Fp LBS	$\Omega_0 = 2.0^1$ BRACE BRACKET ATTACHMENT TYPE	ALLOWABLE LATERAL LOAD Fp LBS	MAX BRACE RANGE q	DEWALT/POWERS POWER-STUD+ SD2 CONCRETE ANCHOR (ICC ESR-2502) SPECIAL INSPECTION REQ'D MIN. DIA. da INCH	MIN. EFF. EMBED. hef INCH	MIN. HOLE DEPTH ho INCH	MIN. SPACING Smin INCH	MIN. END DIST. Cmin INCH	TORQUE REQ'D FT-LBS
63A TO 63K	1080	63A TO 63K	1080	30°- 45°	⅝	4¼	5¼	MAX OF: 3*hef OR 1.5*FLUTE WIDTH	6⅜	60
63A TO 63G	620	63A TO 63G	620	46°- 60°						

SEE DETAIL N0.00 FOR SECTION NOTES
[1] OVERSTRENGTH FACTOR AS REQUIRED FOR ANCHORAGE TO CONCRETE.

MASON WEST
1601 E. Miraloma Ave. Placentia, CA 92870
TEL (714) 630 - 0701, www.masonwest.com

Jiefu "Jeff" Zhang, SE
California SE No. S5270

PAGE
N2.62

SEISMIC BRACKET ATTACHMENT
TO CONCRETE FILLED METAL DECK
WITH (4) DEWALT/POWERS POWER-STUD+ SD2 CONCRETE ANCHORS

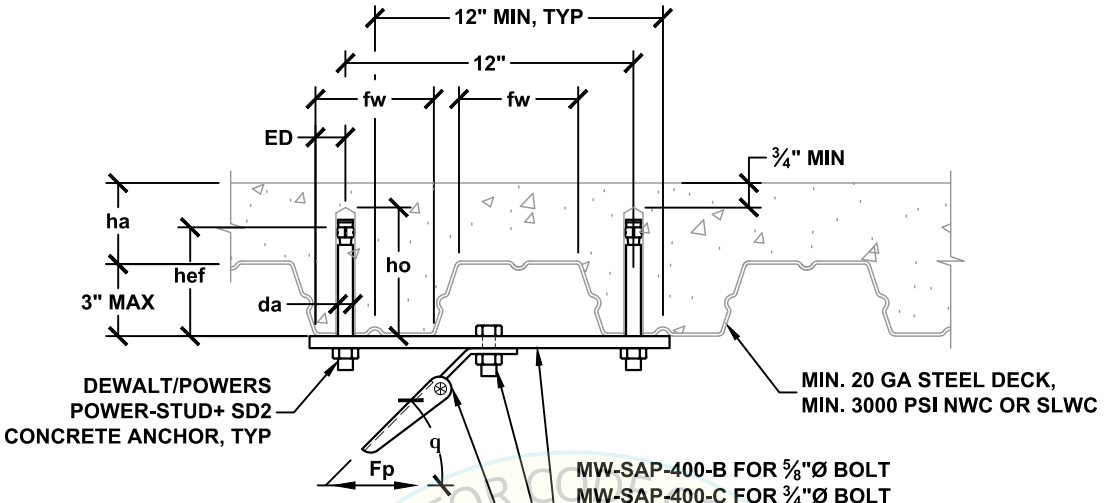

MIN FLUTE WIDTH fw INCH	MIN EDGE DIST ED INCH	MIN CONC. COVER ha INCH
3⅞	1	2
4½	1¼	3¼

BRACE BRACKET ATTACHMENT TYPE	ALLOWABLE LATERAL LOAD Fp LBS	Ω_0 = 2.0[1] BRACE BRACKET ATTACHMENT TYPE	ALLOWABLE LATERAL LOAD Fp LBS	MAX BRACE RANGE q	BOLT DIA. INCH	DEWALT/POWERS POWER-STUD+ SD2 CONCRETE ANCHOR (ICC ESR-2502) SPECIAL INSPECTION REQ'D DIA. da INCH	MIN. EFF. EMBED. hef INCH	MIN. HOLE DEPTH ho INCH	MIN. SPACING Smin INCH	MIN. END DIST. Cmin INCH	TORQUE REQ'D FT-LBS
63A TO 63P	3080	63A TO 63P	2590	30°- 45°	⅝	⅝	4¼	5¼	MAX OF: 3*hef OR 1.5*FLUTE WIDTH	6⅜	60
63A TO 63N	2080	63A TO 63M	1880	46°- 60°	⅝						
75A TO 75Q	3500	75A TO 75P	2590	30°- 45°	¾						
75A TO 75N	2020	75A TO 75M	1880	46°- 60°	¾						
100A TO 100Q	3500	100A TO 100P	2590	30°- 45°	1						
100A TO 100Q	2020	100A TO 100M	1880	46°- 60°	1						

SEE DETAIL N0.00 FOR SECTION NOTES

[1] OVERSTRENGTH FACTOR AS REQUIRED FOR ANCHORAGE TO CONCRETE.

REVIEWED FOR CODE COMPLIANCE
HCAi
OPM-0043
BY: William Staehlin
DATE: 01/23/2023
CALIFORNIA BUILDING CODE, 2022

MASON WEST
1601 E. Miraloma Ave. Placentia, CA 92870
TEL (714) 630 - 0701, www.masonwest.com

Jiefu "Jeff" Zhang, SE
California SE No. S5270

PAGE
N2.63

SEISMIC BRACKET ATTACHMENT
TO CONCRETE FILLED METAL DECK
WITH (1) DEWALT/POWERS POWER-STUD+ SD2 CONCRETE ANCHOR

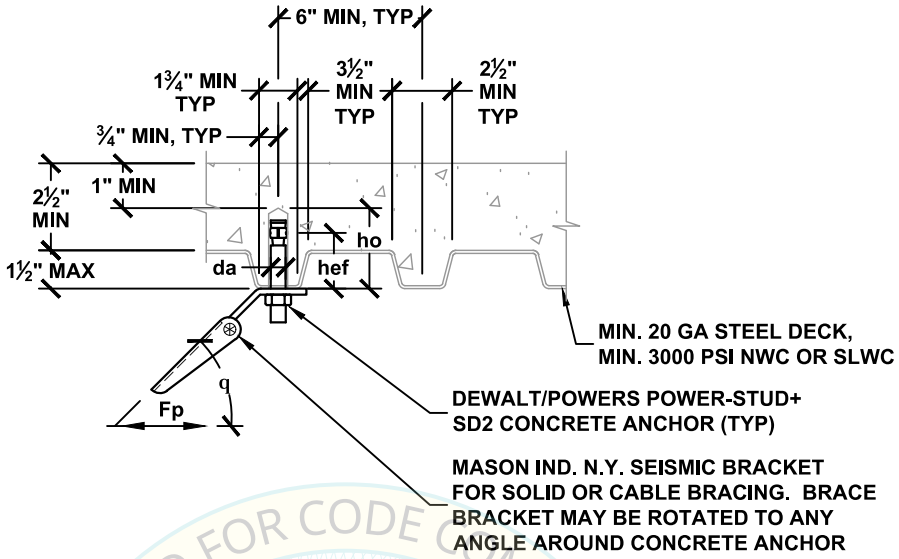

REVIEWED FOR CODE COMPLIANCE
HCAi
OPM-0043
BY: William Staehlin
DATE: 01/23/2023
CALIFORNIA BUILDING CODE 2022

BRACE BRACKET ATTACHMENT TYPE	ALLOWABLE LATERAL LOAD Fp LBS	$\Omega_0 = 2.0^1$ BRACE BRACKET ATTACHMENT TYPE	ALLOWABLE LATERAL LOAD Fp LBS	MAX BRACE RANGE q	DEWALT/POWERS POWER-STUD+ SD2 CONCRETE ANCHOR (ICC ESR-2502) SPECIAL INSPECTION REQ'D DIA. da INCH	MIN. EFF. EMBED. hef INCH	MIN. HOLE DEPTH ho INCH	MIN. SPACING Smin INCH	MIN. END DIST. Cmin INCH	TORQUE REQ'D FT-LBS
38A TO 38C	190	38A TO 38C	200	30°- 45°	⅜	2	2⅝	6	3	20
38A TO 38A	110	38A TO 38B	130	46°- 60°						
50A TO 50C	230	50A TO 50D	260	30°- 45°	½	2	2¾	6	3	40
50A TO 50B	130	50A TO 50B	170	46°- 60°						

SEE DETAIL N0.00 FOR SECTION NOTES

[1] OVERSTRENGTH FACTOR AS REQUIRED FOR ANCHORAGE TO CONCRETE.

MASON WEST
1601 E. Miraloma Ave. Placentia, CA 92870
TEL (714) 630 - 0701, www.masonwest.com

Jiefu "Jeff" Zhang, SE
California SE No. S5270

PAGE
N2.64

SEISMIC BRACKET ATTACHMENT
TO CONCRETE FILLED METAL DECK
WITH (2) DEWALT/POWERS POWER-STUD+ SD2 CONCRETE ANCHORS

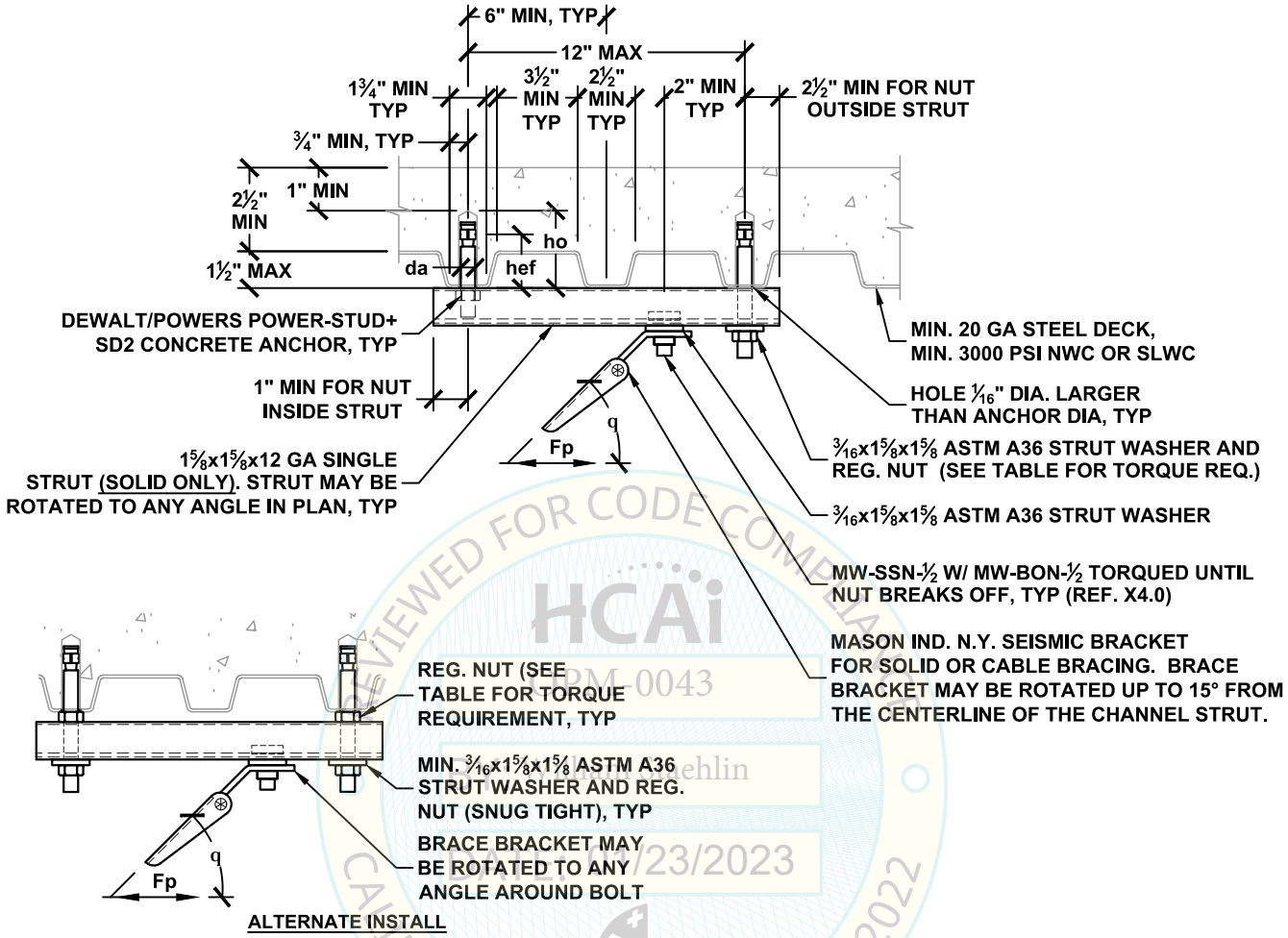

ALTERNATE INSTALL

BRACE BRACKET ATTACHMENT TYPE	ALLOWABLE LATERAL LOAD Fp LBS	$\Omega_0 = 2.0^1$ BRACE BRACKET ATTACHMENT TYPE	ALLOWABLE LATERAL LOAD Fp LBS	MAX BRACE RANGE q	DEWALT/POWERS POWER-STUD+ SD2 CONCRETE ANCHOR (ICC ESR-2502) SPECIAL INSPECTION REQ'D DIA. da INCH	MIN. EFF. EMBED. hef INCH	MIN. HOLE DEPTH ho INCH	MIN. SPACING Smin INCH	MIN. END DIST. Cmin INCH	TORQUE REQ'D FT-LBS
50A TO 50E	360	50A TO 50C	220	30°- 45°	⅜	2	2⅝	6	3	20
50A TO 50D	250	50A TO 50B	150	46°- 60°						
50A TO 50F	450	50A TO 50D	270	30°- 45°	½	2	2¾	6	3	40
50A TO 50D	300	50A TO 50C	180	46°- 60°						

SEE DETAIL N0.00 FOR SECTION NOTES

[1] OVERSTRENGTH FACTOR AS REQUIRED FOR ANCHORAGE TO CONCRETE.

MASON WEST
1601 E. Miraloma Ave. Placentia, CA 92870
TEL (714) 630 - 0701, www.masonwest.com

Jiefu "Jeff" Zhang, SE
California SE No. S5270

PAGE
N2.65

REVIEWED FOR CODE COMPLIANCE
HCAi
OPM-0043
William Staehlin
1/23/2023
CALIFORNIA BUILDING CODE 2022

SEISMIC BRACKET ATTACHMENT
TO CONCRETE FILLED METAL DECK
WITH (2) DEWALT/POWERS POWER-STUD+ SD2 CONCRETE ANCHORS

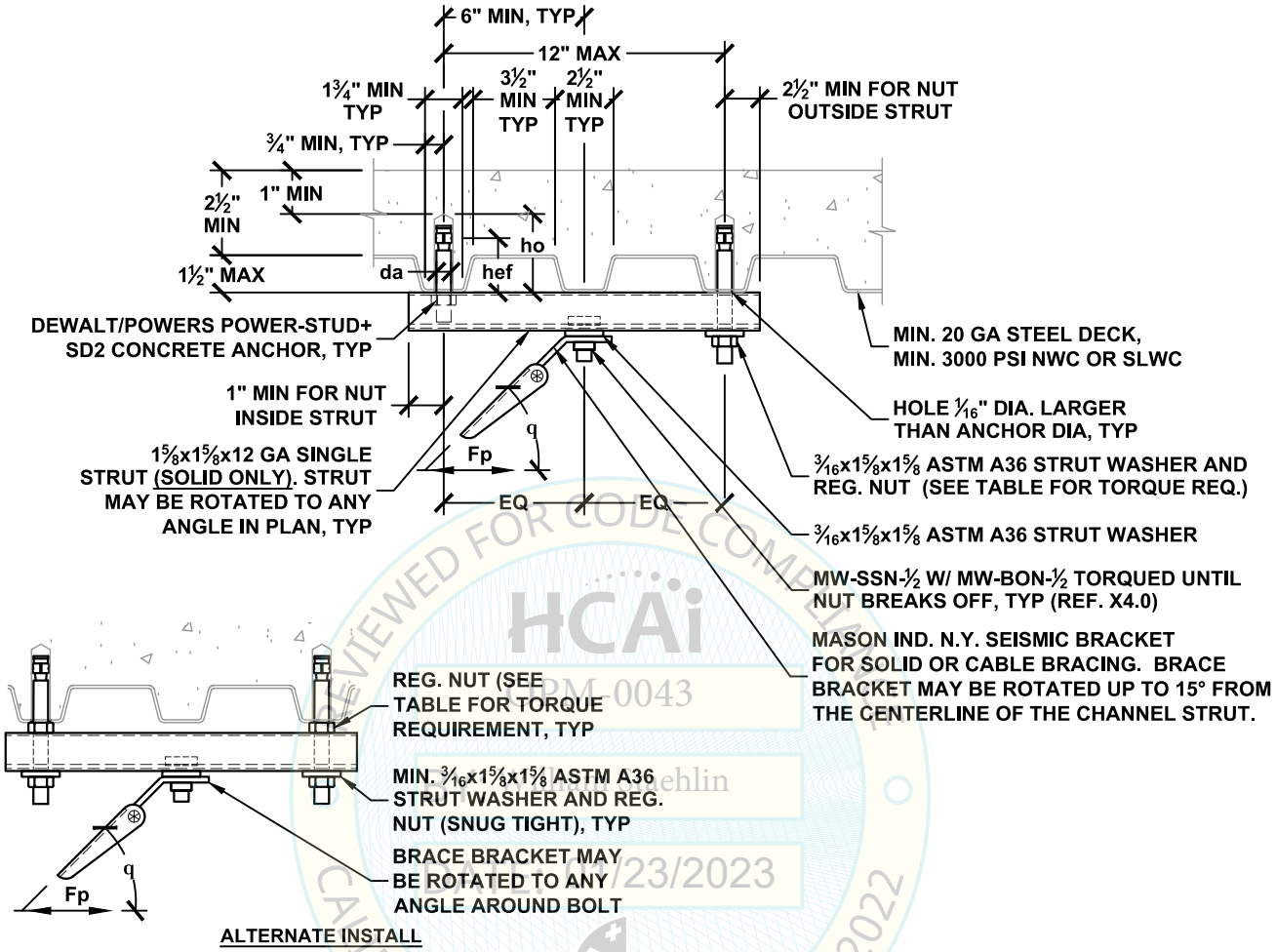

ALTERNATE INSTALL

BRACE BRACKET ATTACHMENT TYPE	ALLOWABLE LATERAL LOAD Fp LBS	$\Omega_0 = 2.0^1$ BRACE BRACKET ATTACHMENT TYPE	ALLOWABLE LATERAL LOAD Fp LBS	MAX BRACE RANGE q	DEWALT/POWERS POWER-STUD+ SD2 CONCRETE ANCHOR (ICC ESR-2502) SPECIAL INSPECTION REQ'D DIA. da INCH	MIN. EFF. EMBED. hef INCH	MIN. HOLE DEPTH ho INCH	MIN. SPACING Smin INCH	MIN. END DIST. Cmin INCH	TORQUE REQ'D FT-LBS
50A TO 50G	620	50A TO 50E	400	30°- 45°	⅜	2	2⅝	6	3	20
50A TO 50F	450	50A TO 50D	270	46°- 60°						
50A TO 50G	620	50A TO 50F	510	30°- 45°	½	2	2¾	6	3	40
50A TO 50F	530	50A TO 50D	340	46°- 60°						

MASON WEST
1601 E. Miraloma Ave. Placentia, CA 92870
TEL (714) 630 - 0701, www.masonwest.com

Jiefu "Jeff" Zhang, SE
California SE No. S5270

PAGE
N2.65.1

HCAi
OPM-0043
William Staehlin
1/23/2023
REVIEWED FOR CODE COMPLIANCE
CALIFORNIA BUILDING CODE 2022

SEISMIC BRACKET ATTACHMENT TO CONCRETE FILLED METAL DECK WITH (1) CONCRETE SCREW ANCHOR AT LOWER FLUTE ONLY

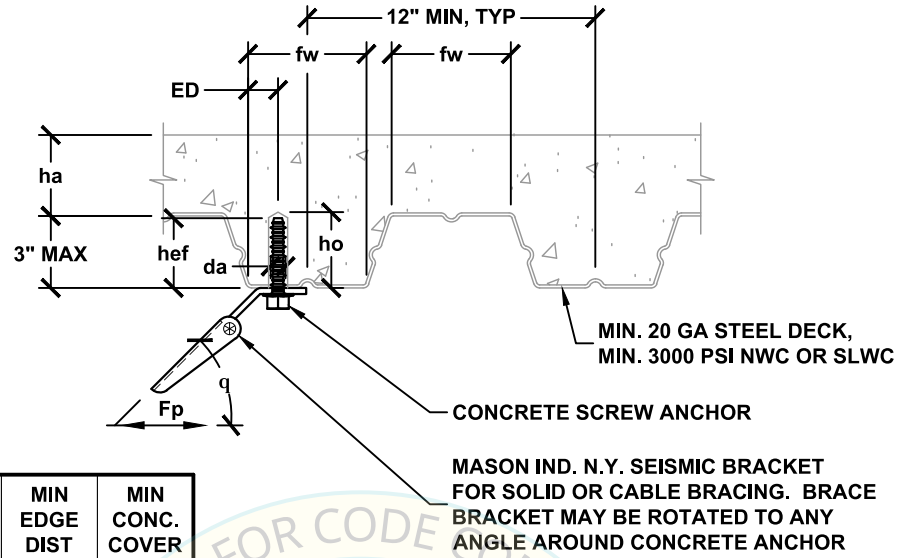

ANCHOR	MIN FLUTE WIDTH fw INCH	MIN EDGE DIST ED INCH	MIN CONC. COVER ha INCH
DEWALT/POWERS	3⅞	1	2½
MASON	4½	1¼	1½
HILTI	4½	1¼	3¼

BRACE BRACKET ATTACHMENT TYPE	ALLOWABLE LATERAL LOAD Fp LBS	$\Omega_0 = 2.0$[1] BRACE BRACKET ATTACHMENT TYPE	$\Omega_0 = 2.0$[1] ALLOWABLE LATERAL LOAD Fp LBS	MAX BRACE RANGE q	DEWALT/POWERS SCREW-BOLT+ CONCRETE SCREW ANCHOR (ICC ESR-3889) SPECIAL INSPECTION REQ'D DIA. da INCH	MIN. EFF. EMBED. hef INCH	MIN. HOLE DEPTH ho INCH	MIN. SPACING Smin INCH	MIN. END DIST. Cmin INCH	MAX INSTALL. TORQUE FT-LBS
38A TO 38D	280	38A TO 38D	280	30°- 45°	⅜	2½	2⅝	6	3	40
38A TO 38B	170	38A TO 38B	170	46°- 60°						
50A TO 50D	310	50A TO 50D	300	30°- 45°	½	2¼	3⅛	6¾	3⅜	45
50A TO 50C	190	50A TO 50C	190	46°- 60°						
50A TO 50F	570	50A TO 50F	570	30°- 45°	½	3¼	4⅜	9⅜	4 11/16	60
50A TO 50D	340	50A TO 50D	340	46°- 60°						
63A TO 63D	250	63A TO 63D	250	30°- 45°	⅝	2⅞	4⅛	8⅝	4 5/16	60
63A TO 63B	150	63A TO 63B	150	46°- 60°						
63A TO 63E	370	63A TO 63E	370	30°- 45°	⅝	3¾	5⅛	11¼	5⅝	60
63A TO 63C	210	63A TO 63C	210	46°- 60°						
75A TO 75F	490	75A TO 75F	490	30°- 45°	¾	3⅛	4⅜	9¾	4⅞	70
75A TO 75D	290	75A TO 75D	290	46°- 60°						

SEE DETAIL N0.00 FOR SECTION NOTES
[1] OVERSTRENGTH FACTOR AS REQUIRED FOR ANCHORAGE TO CONCRETE.
[2] SEE PAGE N2.70.1 FOR ADDITIONAL ALLOWABLE LOAD TABLES.

REVIEWED FOR CODE COMPLIANCE
HCAi
OPM-0043
BY: William Staehlin
DATE: 01/23/2023
CALIFORNIA BUILDING CODE 2022

MASON WEST
1601 E. Miraloma Ave. Placentia, CA 92870
TEL (714) 630 - 0701, www.masonwest.com

Jiefu "Jeff" Zhang, SE
California SE No. S5270

PAGE
N2.70

SEISMIC BRACKET ATTACHMENT
TO CONCRETE FILLED METAL DECK
WITH (1) CONCRETE SCREW ANCHOR AT LOWER FLUTE ONLY

BRACE BRACKET ATTACHMENT TYPE	ALLOWABLE LATERAL LOAD Fp LBS	$\Omega_0 = 2.0$[1] BRACE BRACKET ATTACHMENT TYPE	$\Omega_0 = 2.0$[1] ALLOWABLE LATERAL LOAD Fp LBS	MAX BRACE RANGE q	MASON IND. N.Y. SAST CONCRETE SCREW ANCHOR (ICC ESR-2713) SPECIAL INSPECTION REQ'D DIA. da INCH	MIN. EFF. EMBED. hef INCH	MIN. HOLE DEPTH ho INCH	MIN. SPACING Smin INCH	MIN. END DIST. Cmin INCH	MAX INSTALL. TORQUE FT-LBS
38A TO 38B	130	38A TO 38B	130	30°- 45°	3/8	1 7/8	2 3/4	6 3/4	3 3/8	50
38A TO 38A	80	38A TO 38A	80	46°- 60°						
50A TO 50B	140	50A TO 50B	140	30°- 45°	1/2	1 3/8	2 1/2	6 3/4	3 3/8	65
50A TO 50A	80	50A TO 50A	80	46°- 60°						
50A TO 50D	300	50A TO 50D	300	30°- 45°	1/2	2 5/8	4	7 7/8	3 15/16	65
50A TO 50C	180	50A TO 50C	180	46°- 60°						

BRACE BRACKET ATTACHMENT TYPE	ALLOWABLE LATERAL LOAD Fp LBS	$\Omega_0 = 2.0$[1] BRACE BRACKET ATTACHMENT TYPE	$\Omega_0 = 2.0$[1] ALLOWABLE LATERAL LOAD Fp LBS	MAX BRACE RANGE q	HILTI KH-EZ CONCRETE SCREW ANCHOR (ICC ESR-3027) SPECIAL INSPECTION REQ'D DIA. da INCH	MIN. EFF. EMBED. hef INCH	MIN. HOLE DEPTH ho INCH	MIN. SPACING Smin INCH	MIN. END DIST. Cmin INCH	MAX INSTALL. TORQUE FT-LBS
38A TO 38E	350	38A TO 38D	330	30°- 45°	3/8	2 1/2	3 1/2	7 1/2	3 3/4	40
38A TO 38C	220	38A TO 38C	220	46°- 60°						
50A TO 50D	260	50A TO 50D	250	30°- 45°	1/2	2 1/4	3 3/8	6 3/4	3 3/8	45
50A TO 50B	160	50A TO 50B	160	46°- 60°						
50A TO 50E	400	50A TO 50E	370	30°- 45°	1/2	3 1/4	4 5/8	9 3/4	4 7/8	45
50A TO 50D	250	50A TO 50D	250	46°- 60°						
63A TO 63D	330	63A TO 63D	320	30°- 45°	5/8	2 1/2	3 5/8	7 1/2	3 3/4	85
63A TO 63C	210	63A TO 63C	210	46°- 60°						
63A TO 63G	590	63A TO 63F	500	30°- 45°	5/8	3 7/8	5 3/8	11 5/8	5 13/16	85
63A TO 63E	400	63A TO 63E	400	46°- 60°						
75A TO 75E	360	75A TO 75E	360	30°- 45°	3/4	3	4 3/8	9	4 1/2	115
75A TO 75C	220	75A TO 75C	220	46°- 60°						

SEE DETAIL N0.00 FOR SECTION NOTES

[1] OVERSTRENGTH FACTOR AS REQUIRED FOR ANCHORAGE TO CONCRETE.

HCAi
OPM-0043
REVIEWED FOR CODE COMPLIANCE
BY William Staehlin
DATE: 01/23/2023
CALIFORNIA BUILDING CODE 2022

MASON WEST
1601 E. Miraloma Ave. Placentia, CA 92870
TEL (714) 630 - 0701, www.masonwest.com

Jiefu "Jeff" Zhang, SE
California SE No. S5270

SEISMIC BRACKET ATTACHMENT
TO CONCRETE FILLED METAL DECK
WITH (2) CONCRETE SCREW ANCHORS AT LOWER FLUTE ONLY

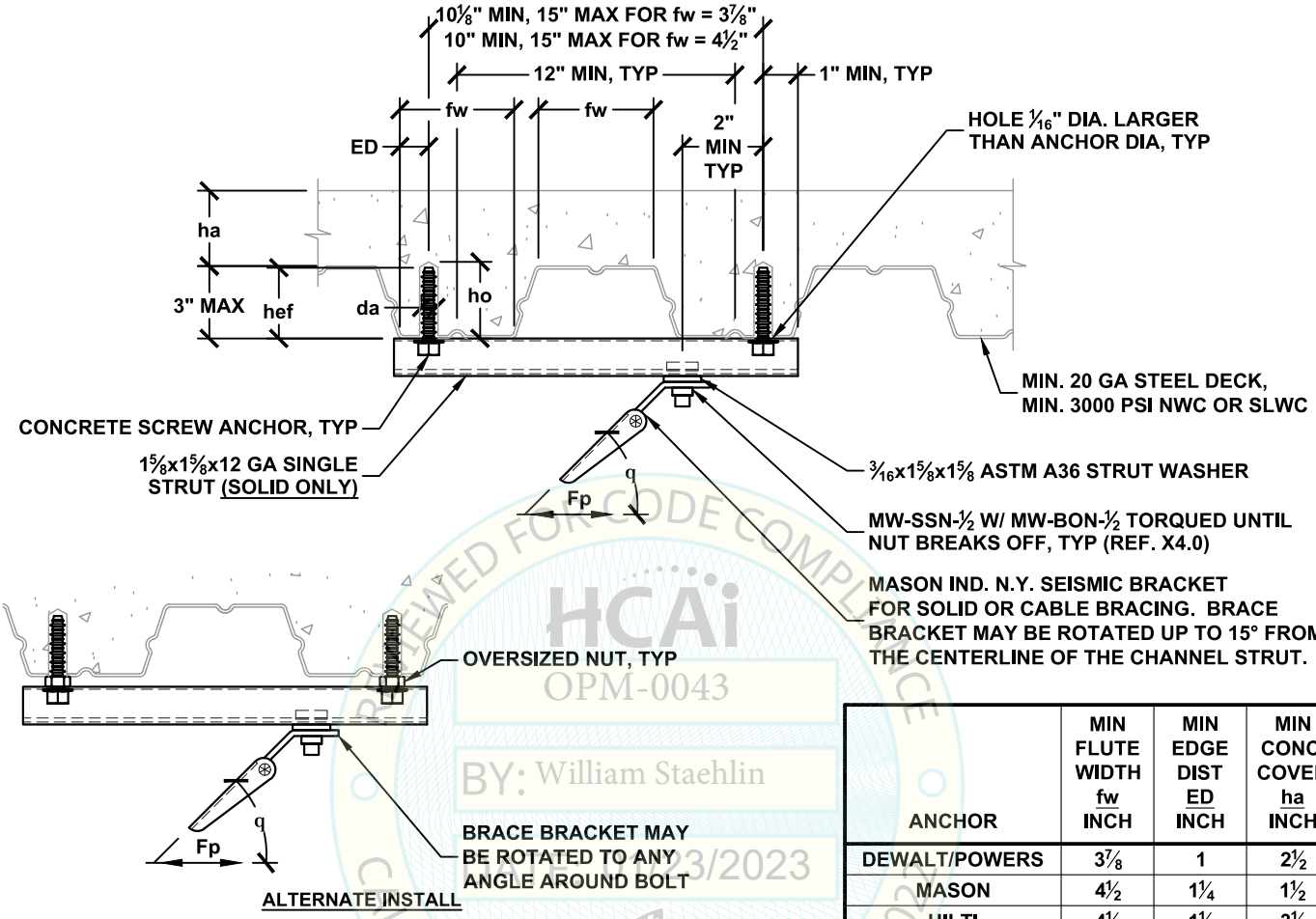

ANCHOR	MIN FLUTE WIDTH fw INCH	MIN EDGE DIST ED INCH	MIN CONC. COVER ha INCH
DEWALT/POWERS	3⅞	1	2½
MASON	4½	1¼	1½
HILTI	4½	1¼	3¼

BRACE BRACKET ATTACHMENT TYPE	ALLOWABLE LATERAL LOAD Fp LBS	Ω_0 = 2.0[1] BRACE BRACKET ATTACHMENT TYPE	ALLOWABLE LATERAL LOAD Fp LBS	MAX BRACE RANGE q	DEWALT/POWERS SCREW-BOLT+ CONCRETE SCREW ANCHOR (ICC ESR-3889) SPECIAL INSPECTION REQ'D DIA. da INCH	MIN. EFF. EMBED. hef INCH	MIN. HOLE DEPTH ho INCH	MIN. SPACING Smin INCH	MIN. END DIST. Cmin INCH	MAX INSTALL. TORQUE FT-LBS
50A TO 50F	560	50A TO 50D	330	30°- 45°	⅜	2½	2¼	6	3	40
50A TO 50E	390	50A TO 50C	240	46°- 60°						
50A TO 50G	620	50A TO 50G	620	30°- 45°	½	3¼	4⅜	9⅜	4 11/16	60
50A TO 50F	530	50A TO 50F	480	46°- 60°						

SEE DETAIL N0.00 FOR SECTION NOTES
[1] OVERSTRENGTH FACTOR AS REQUIRED FOR ANCHORAGE TO CONCRETE.
[2] SEE PAGE N2.71.1 FOR ADDITIONAL ALLOWABLE LOAD TABLES.

MASON WEST
1601 E. Miraloma Ave. Placentia, CA 92870
TEL (714) 630 - 0701, www.masonwest.com

Jiefu "Jeff" Zhang, SE
California SE No. S5270

PAGE
N2.71

REVIEWED FOR CODE COMPLIANCE
HCAi
OPM-0043
BY: William Staehlin
1/23/2023
CALIFORNIA BUILDING CODE 2022

SEISMIC BRACKET ATTACHMENT
TO CONCRETE FILLED METAL DECK
WITH (2) CONCRETE SCREW ANCHORS AT LOWER FLUTE ONLY

BRACE BRACKET ATTACHMENT TYPE	ALLOWABLE LATERAL LOAD Fp LBS	$\Omega_0 = 2.0^1$ BRACE BRACKET ATTACHMENT TYPE	$\Omega_0 = 2.0^1$ ALLOWABLE LATERAL LOAD Fp LBS	MAX BRACE RANGE q	MASON IND. N.Y. SAST CONCRETE SCREW ANCHOR (ICC ESR-2713) SPECIAL INSPECTION REQ'D DIA. da INCH	MIN. EFF. EMBED. hef INCH	MIN. HOLE DEPTH ho INCH	MIN. SPACING Smin INCH	MIN. END DIST. Cmin INCH	MAX INSTALL. TORQUE FT-LBS
50A TO 50D	290	50A TO 50C	180	30°- 45°	½	1⅜	2½	6¾	3⅜	65
50A TO 50C	200	50A TO 50A	120	46°- 60°						
50A TO 50G	620	50A TO 50E	370	30°- 45°	½	2⅝	4	7⅞	3 15/16	65
50A TO 50E	420	50A TO 50D	250	46°- 60°						

BRACE BRACKET ATTACHMENT TYPE	ALLOWABLE LATERAL LOAD Fp LBS	$\Omega_0 = 2.0^1$ BRACE BRACKET ATTACHMENT TYPE	$\Omega_0 = 2.0^1$ ALLOWABLE LATERAL LOAD Fp LBS	MAX BRACE RANGE q	HILTI KH-EZ CONCRETE SCREW ANCHOR (ICC ESR-3027) SPECIAL INSPECTION REQ'D DIA. da INCH	MIN. EFF. EMBED. hef INCH	MIN. HOLE DEPTH ho INCH	MIN. SPACING Smin INCH	MIN. END DIST. Cmin INCH	MAX INSTALL. TORQUE FT-LBS
50A TO 50F	490	50A TO 50D	290	30°- 45°	½	2¼	3⅜	6¾	3⅜	45
50A TO 50E	350	50A TO 50C	210	46°- 60°						
50A TO 50G	620	50A TO 50E	430	30°- 45°	½	3¼	4⅝	9¾	4⅞	45
50A TO 50F	530	50A TO 50D	320	46°- 60°						

SEE DETAIL N0.00 FOR SECTION NOTES

[1] OVERSTRENGTH FACTOR AS REQUIRED FOR ANCHORAGE TO CONCRETE.

REVIEWED FOR CODE COMPLIANCE
HCAi
OPM-0043
BY: William Staehlin
DATE: 01/23/2023
CALIFORNIA BUILDING CODE, 2022

MASON WEST
1601 E. Miraloma Ave. Placentia, CA 92870
TEL (714) 630 - 0701, www.masonwest.com

Jiefu "Jeff" Zhang, SE
California SE No. S5270

PAGE
N2.71.1

SEISMIC BRACKET ATTACHMENT TO CONCRETE FILLED METAL DECK WITH (2) CONCRETE SCREW ANCHORS AT LOWER FLUTE ONLY

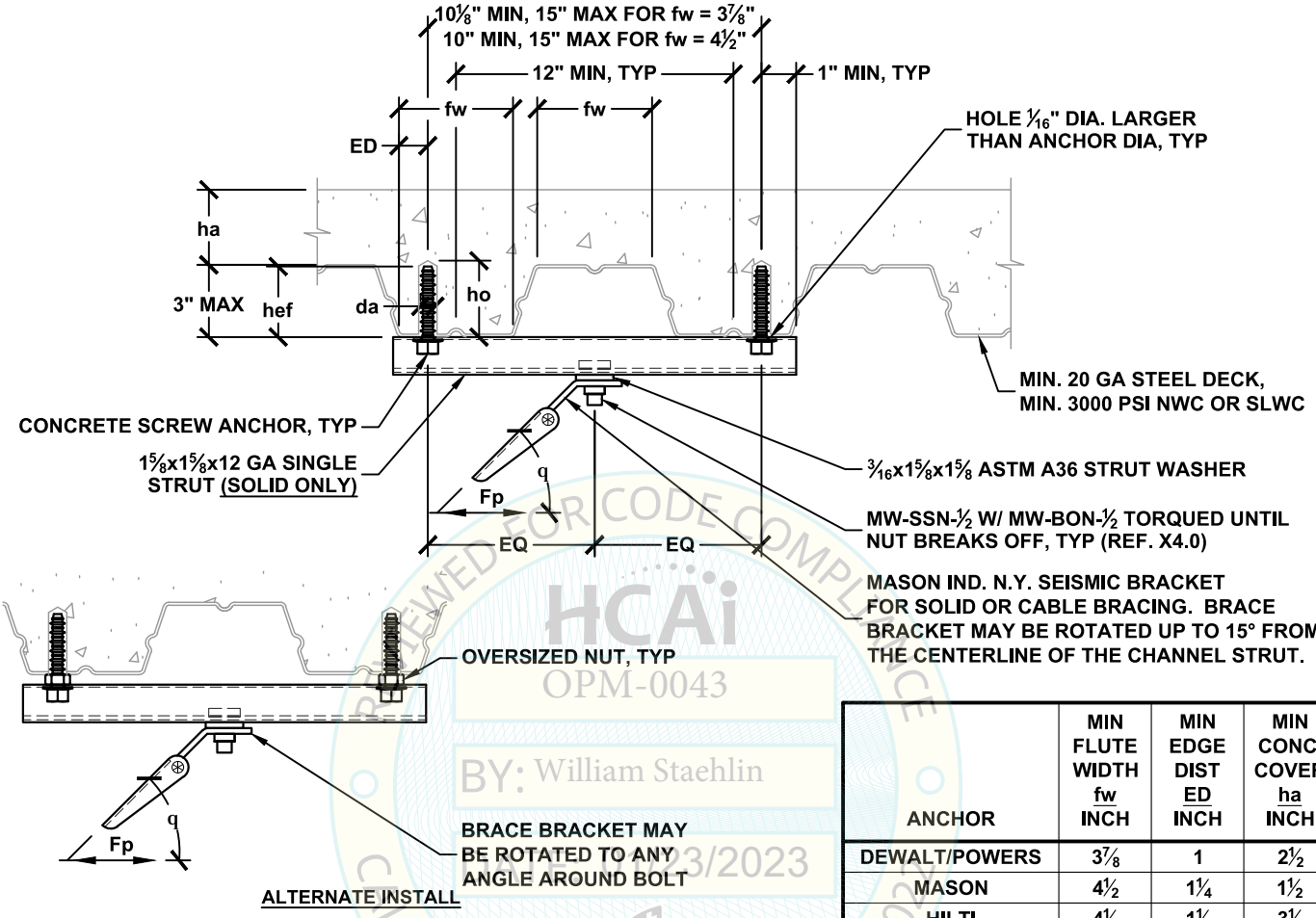

ANCHOR	MIN FLUTE WIDTH fw INCH	MIN EDGE DIST ED INCH	MIN CONC. COVER ha INCH
DEWALT/POWERS	3⅞	1	2½
MASON	4½	1¼	1½
HILTI	4½	1¼	3¼

BRACE BRACKET ATTACHMENT TYPE	ALLOWABLE LATERAL LOAD Fp LBS	Ω_0 = 2.0[1] BRACE BRACKET ATTACHMENT TYPE	ALLOWABLE LATERAL LOAD Fp LBS	MAX BRACE RANGE q	DEWALT/POWERS SCREW-BOLT+ CONCRETE SCREW ANCHOR (ICC ESR-3889) SPECIAL INSPECTION REQ'D DIA. da INCH	MIN. EFF. EMBED. hef INCH	MIN. HOLE DEPTH ho INCH	MIN. SPACING Smin INCH	MIN. END DIST. Cmin INCH	MAX INSTALL. TORQUE FT-LBS
50A TO 50G	620	50A TO 50F	570	30°- 45°	⅜	2½	2¼	6	3	40
50A TO 50F	530	50A TO 50E	400	46°- 60°						
50A TO 50G	620	50A TO 50G	620	30°- 45°	½	3¼	4⅜	9⅜	4 11/16	60
50A TO 50F	530	50A TO 50F	530	46°- 60°						

SEE DETAIL N0.00 FOR SECTION NOTES
[1] OVERSTRENGTH FACTOR AS REQUIRED FOR ANCHORAGE TO CONCRETE.
[2] SEE PAGE N2.71.3 FOR ADDITIONAL ALLOWABLE LOAD TABLES.

MASON WEST
1601 E. Miraloma Ave. Placentia, CA 92870
TEL (714) 630 - 0701, www.masonwest.com

Jiefu "Jeff" Zhang, SE
California SE No. S5270

PAGE
N2.71.2

REVIEWED FOR CODE COMPLIANCE
HCAi
OPM-0043
BY: William Staehlin
1/23/2023
CALIFORNIA BUILDING CODE 2022

SEISMIC BRACKET ATTACHMENT
TO CONCRETE FILLED METAL DECK
WITH (2) CONCRETE SCREW ANCHORS AT LOWER FLUTE ONLY

BRACE BRACKET ATTACHMENT TYPE	ALLOWABLE LATERAL LOAD Fp LBS	$\Omega_0 = 2.0^1$ BRACE BRACKET ATTACHMENT TYPE	$\Omega_0 = 2.0^1$ ALLOWABLE LATERAL LOAD Fp LBS	MAX BRACE RANGE q	MASON IND. N.Y. SAST CONCRETE SCREW ANCHOR (ICC ESR-2713) SPECIAL INSPECTION REQ'D DIA. da INCH	MIN. EFF. EMBED. hef INCH	MIN. HOLE DEPTH ho INCH	MIN. SPACING Smin INCH	MIN. END DIST. Cmin INCH	MAX INSTALL. TORQUE FT-LBS
50A TO 50F	500	50A TO 50D	300	30°- 45°	½	1⅜	2½	6¾	3⅜	65
50A TO 50D	340	50A TO 50C	200	46°- 60°						
50A TO 50G	620	50A TO 50G	620	30°- 45°	½	2⅝	4	7⅞	3 15/16	65
50A TO 50F	530	50A TO 50E	430	46°- 60°						

BRACE BRACKET ATTACHMENT TYPE	ALLOWABLE LATERAL LOAD Fp LBS	$\Omega_0 = 2.0^1$ BRACE BRACKET ATTACHMENT TYPE	$\Omega_0 = 2.0^1$ ALLOWABLE LATERAL LOAD Fp LBS	MAX BRACE RANGE q	HILTI KH-EZ CONCRETE SCREW ANCHOR (ICC ESR-3027) SPECIAL INSPECTION REQ'D DIA. da INCH	MIN. EFF. EMBED. hef INCH	MIN. HOLE DEPTH ho INCH	MIN. SPACING Smin INCH	MIN. END DIST. Cmin INCH	MAX INSTALL. TORQUE FT-LBS
50A TO 50G	620	50A TO 50F	500	30°- 45°	½	2¼	3⅜	6¾	3⅜	45
50A TO 50F	530	50A TO 50E	360	46°- 60°						
50A TO 50G	620	50A TO 50G	620	30°- 45°	½	3¼	4⅝	9¾	4⅞	45
50A TO 50F	530	50A TO 50F	530	46°- 60°						

SEE DETAIL N0.00 FOR SECTION NOTES

[1] OVERSTRENGTH FACTOR AS REQUIRED FOR ANCHORAGE TO CONCRETE.

REVIEWED FOR CODE COMPLIANCE
HCAi
OPM-0043
BY: William Staehlin
DATE: 01/23/2023
CALIFORNIA BUILDING CODE, 2022

MASON WEST
1601 E. Miraloma Ave. Placentia, CA 92870
TEL (714) 630 - 0701, www.masonwest.com

Jiefu "Jeff" Zhang, SE
California SE No. S5270

PAGE
N2.71.3

SEISMIC BRACKET ATTACHMENT TO CONCRETE FILLED METAL DECK WITH (2) CONCRETE SCREW ANCHORS

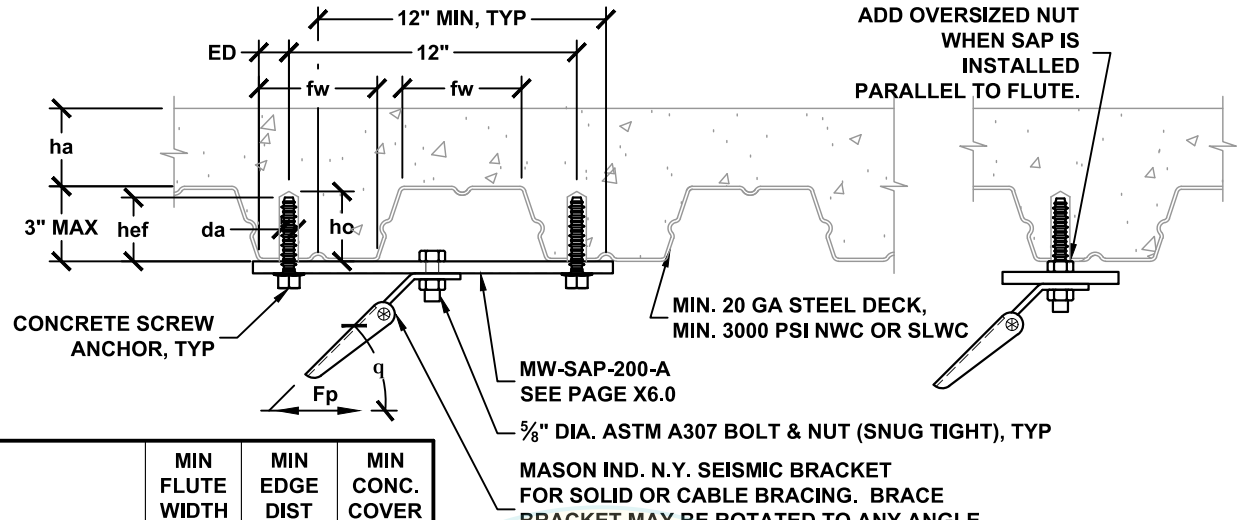

ANCHOR	MIN FLUTE WIDTH fw INCH	MIN EDGE DIST ED INCH	MIN CONC. COVER ha INCH
DEWALT/POWERS	3⅞	1	2½
HILTI	4½	1¼	3¼

BRACE BRACKET ATTACHMENT TYPE	ALLOWABLE LATERAL LOAD Fp LBS	$\Omega_0 = 2.0$[1] BRACE BRACKET ATTACHMENT TYPE	$\Omega_0 = 2.0$[1] ALLOWABLE LATERAL LOAD Fp LBS	MAX BRACE RANGE q	DEWALT/POWERS SCREW-BOLT+ CONCRETE SCREW ANCHOR (ICC ESR-3889) SPECIAL INSPECTION REQ'D DIA. da INCH	MIN. EFF. EMBED. hef INCH	MIN. HOLE DEPTH ho INCH	MIN. SPACING Smin INCH	MIN. END DIST. Cmin INCH	MAX INSTALL. TORQUE FT-LBS
63A TO 63J	880	63A TO 63F	530	30°- 45°	⅝	2⅞	4⅛	8⅝	4 5/16	60
63A TO 63G	610	63A TO 63E	360	46°- 60°						
63A TO 63J	1080	63A TO 63J	860	30°- 45°	⅝	3¾	5⅛	11¼	5⅝	60
63A TO 63G	620	63A TO 63F	560	46°- 60°						

BRACE BRACKET ATTACHMENT TYPE	ALLOWABLE LATERAL LOAD Fp LBS	$\Omega_0 = 2.0$[1] BRACE BRACKET ATTACHMENT TYPE	$\Omega_0 = 2.0$[1] ALLOWABLE LATERAL LOAD Fp LBS	MAX BRACE RANGE q	HILTI KH-EZ CONCRETE SCREW ANCHOR (ICC ESR-3027) SPECIAL INSPECTION REQ'D DIA. da INCH	MIN. EFF. EMBED. hef INCH	MIN. HOLE DEPTH ho INCH	MIN. SPACING Smin INCH	MIN. END DIST. Cmin INCH	MAX INSTALL. TORQUE FT-LBS
63A TO 63K	1060	63A TO 63G	640	30°- 45°	⅝	2½	3⅝	7½	3¾	85
63A TO 63G	620	63A TO 63F	470	46°- 60°						
63A TO 63K	1080	63A TO 63K	1000	30°- 45°	⅝	3⅞	5⅜	11⅝	5 13/16	85
63A TO 63G	620	63A TO 63G	620	46°- 60°						

SEE DETAIL N0.00 FOR SECTION NOTES

[1] OVERSTRENGTH FACTOR AS REQUIRED FOR ANCHORAGE TO CONCRETE.

MASON WEST
1601 E. Miraloma Ave. Placentia, CA 92870
TEL (714) 630 - 0701, www.masonwest.com

Jiefu "Jeff" Zhang, SE
California SE No. S5270

PAGE
N2.72

HCAi OPM-0043 Reviewed for Code Compliance by William Staehlin DATE: 01/23/2023 CBC CRC IRC CALIFORNIA BUILDING CODE 2022

SEISMIC BRACKET ATTACHMENT TO CONCRETE FILLED METAL DECK WITH (4) CONCRETE SCREW ANCHORS

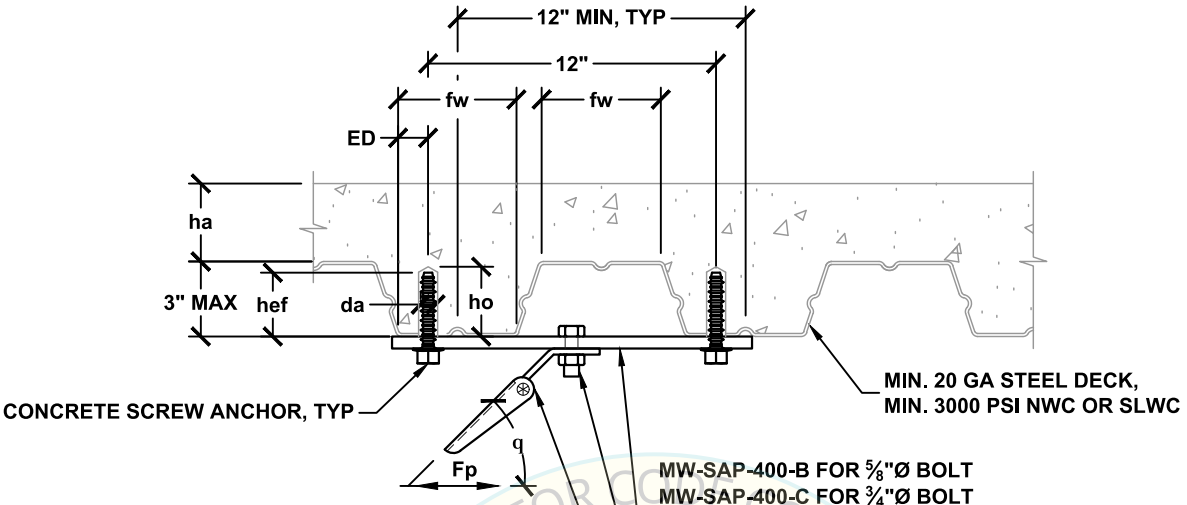

ANCHOR	MIN FLUTE WIDTH fw INCH	MIN EDGE DIST ED INCH	MIN CONC. COVER ha INCH
DEWALT/POWERS	3 7/8	1	2 1/2
HILTI	4 1/2	1 1/4	3 1/4

BRACE BRACKET ATTACHMENT TYPE	ALLOWABLE LATERAL LOAD Fp LBS	$\Omega_0 = 2.0$[1] BRACE BRACKET ATTACHMENT TYPE	ALLOWABLE LATERAL LOAD Fp LBS	MAX BRACE RANGE q	BOLT DIA. INCH	DEWALT/POWERS SCREW-BOLT+ CONCRETE SCREW ANCHOR (ICC ESR-3889) SPECIAL INSPECTION REQ'D DIA. da INCH	MIN. EFF. EMBED. hef INCH	MIN. HOLE DEPTH ho INCH	MIN. SPACING Smin INCH	MIN. END DIST. Cmin INCH	MAX INSTALL. TORQUE FT-LBS
63A TO 63M	1770	63A TO 63K	1060	30°- 45°	5/8	5/8	2 7/8	4 1/8	8 5/8	4 5/16	60
63A TO 63K	1210	63A TO 63H	730	46°- 60°	5/8						
63A TO 63P	2850	63A TO 63M	1710	30°- 45°	5/8	5/8	3 3/4	5 1/8	11 1/4	5 5/8	60
63A TO 63M	1870	63A TO 63K	1120	46°- 60°	5/8						
75A TO 75P	2850	75A TO 75M	1710	30°- 45°	3/4						
75A TO 75M	1870	75A TO 75K	1120	46°- 60°	3/4						
100A TO 100P	2850	100A TO 100M	1710	30°- 45°	1						
100A TO 100M	1870	100A TO 100K	1120	46°- 60°	1						

SEE DETAIL N0.00 FOR SECTION NOTES
[1] OVERSTRENGTH FACTOR AS REQUIRED FOR ANCHORAGE TO CONCRETE.
[2] SEE PAGE N2.73.1 FOR ADDITIONAL ALLOWABLE LOAD TABLES.

REVIEWED FOR CODE COMPLIANCE
HCAI
OPM-0043
BY: William Staehlin
DATE: 01/23/2023
CALIFORNIA BUILDING CODE 2022

MASON WEST
1601 E. Miraloma Ave. Placentia, CA 92870
TEL (714) 630 - 0701, www.masonwest.com

Jiefu "Jeff" Zhang, SE
California SE No. S5270

PAGE
N2.73

SEISMIC BRACKET ATTACHMENT TO CONCRETE FILLED METAL DECK WITH (4) CONCRETE SCREW ANCHORS

BRACE BRACKET ATTACHMENT TYPE	ALLOWABLE LATERAL LOAD Fp LBS	$\Omega_0 = 2.0$[1] BRACE BRACKET ATTACHMENT TYPE	$\Omega_0 = 2.0$[1] ALLOWABLE LATERAL LOAD Fp LBS	MAX BRACE RANGE q	BOLT DIA. INCH	HILTI KH-EZ CONCRETE SCREW ANCHOR (ICC ESR-3027) SPECIAL INSPECTION REQ'D DIA. da INCH	MIN. EFF. EMBED. hef INCH	MIN. HOLE DEPTH ho INCH	MIN. SPACING Smin INCH	MIN. END DIST. Cmin INCH	MAX INSTALL. TORQUE FT-LBS
63A TO 63N	2130	63A TO 63L	1280	30°- 45°	5/8	5/8	2 1/4	3 5/8	7 1/2	3 3/4	85
63A TO 63L	1560	63A TO 63J	940	46°- 60°	5/8						
63A TO 63P	3080	63A TO 63N	2010	30°- 45°	5/8	5/8	3 7/8	5 3/8	11 5/8	5 13/16	85
63A TO 63N	2080	63A TO 63M	1610	46°- 60°	5/8						
75A TO 75P	3350	75A TO 75N	2010	30°- 45°	3/4						
75A TO 75N	2020	75A TO 75M	1610	46°- 60°	3/4						
100A TO 100P	3350	100A TO 100N	2010	30°- 45°	1						
100A TO 100N	2020	100A TO 100M	1610	46°- 60°	1						

SEE DETAIL N0.00 FOR SECTION NOTES

[1] OVERSTRENGTH FACTOR AS REQUIRED FOR ANCHORAGE TO CONCRETE.

[2] SEE PAGE N2.73.1 FOR ADDITIONAL ALLOWABLE LOAD TABLES.

HCAi
OPM-0043
BY: William Staehlin
DATE: 01/23/2023
REVIEWED FOR CODE COMPLIANCE
CALIFORNIA BUILDING CODE, 2022

MASON WEST
1601 E. Miraloma Ave. Placentia, CA 92870
TEL (714) 630 - 0701, www.masonwest.com

Jiefu "Jeff" Zhang, SE
California SE No. S5270

SEISMIC BRACKET ATTACHMENT TO CONCRETE FILLED METAL DECK WITH (1) CONCRETE SCREW ANCHOR

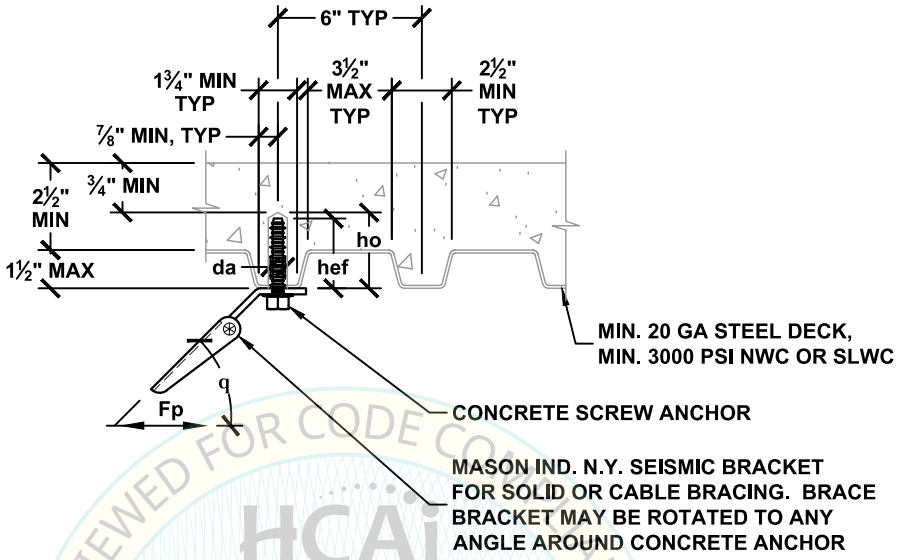

REVIEWED FOR CODE COMPLIANCE
CALIFORNIA BUILDING CODE 2022
HCAi
OPM-0043
BY: William Staehlin
DATE: 01/23/2023

BRACE BRACKET ATTACHMENT TYPE	ALLOWABLE LATERAL LOAD Fp LBS	Ω_0 = 2.0[1] BRACE BRACKET ATTACHMENT TYPE	ALLOWABLE LATERAL LOAD Fp LBS	MAX BRACE RANGE q	DEWALT/POWERS SCREW-BOLT+ CONCRETE SCREW ANCHOR (ICC ESR-3889) SPECIAL INSPECTION REQ'D DIA. da INCH	MIN. EFF. EMBED. hef INCH	MIN. HOLE DEPTH ho INCH	MIN. SPACING Smin INCH	MIN. END DIST. Cmin INCH	MAX INSTALL. TORQUE FT-LBS
38A TO 38D	270	38A TO 38D	270	30°- 45°	⅜	2½	3⅜	7½	3¾	40
38A TO 38B	160	38A TO 38B	160	46°- 60°						
50A TO 50C	180	50A TO 50C	180	30°- 45°	½	1¾	2⅝	5¼	2⅝	45
50A TO 50A	110	50A TO 50A	110	46°- 60°						

SEE DETAIL N0.00 FOR SECTION NOTES

[1] OVERSTRENGTH FACTOR AS REQUIRED FOR ANCHORAGE TO CONCRETE.

MASON WEST
1601 E. Miraloma Ave. Placentia, CA 92870
TEL (714) 630 - 0701, www.masonwest.com

Jiefu "Jeff" Zhang, SE
California SE No. S5270

PAGE
N2.74

SEISMIC BRACKET ATTACHMENT TO CONCRETE FILLED METAL DECK WITH (2) CONCRETE SCREW ANCHORS

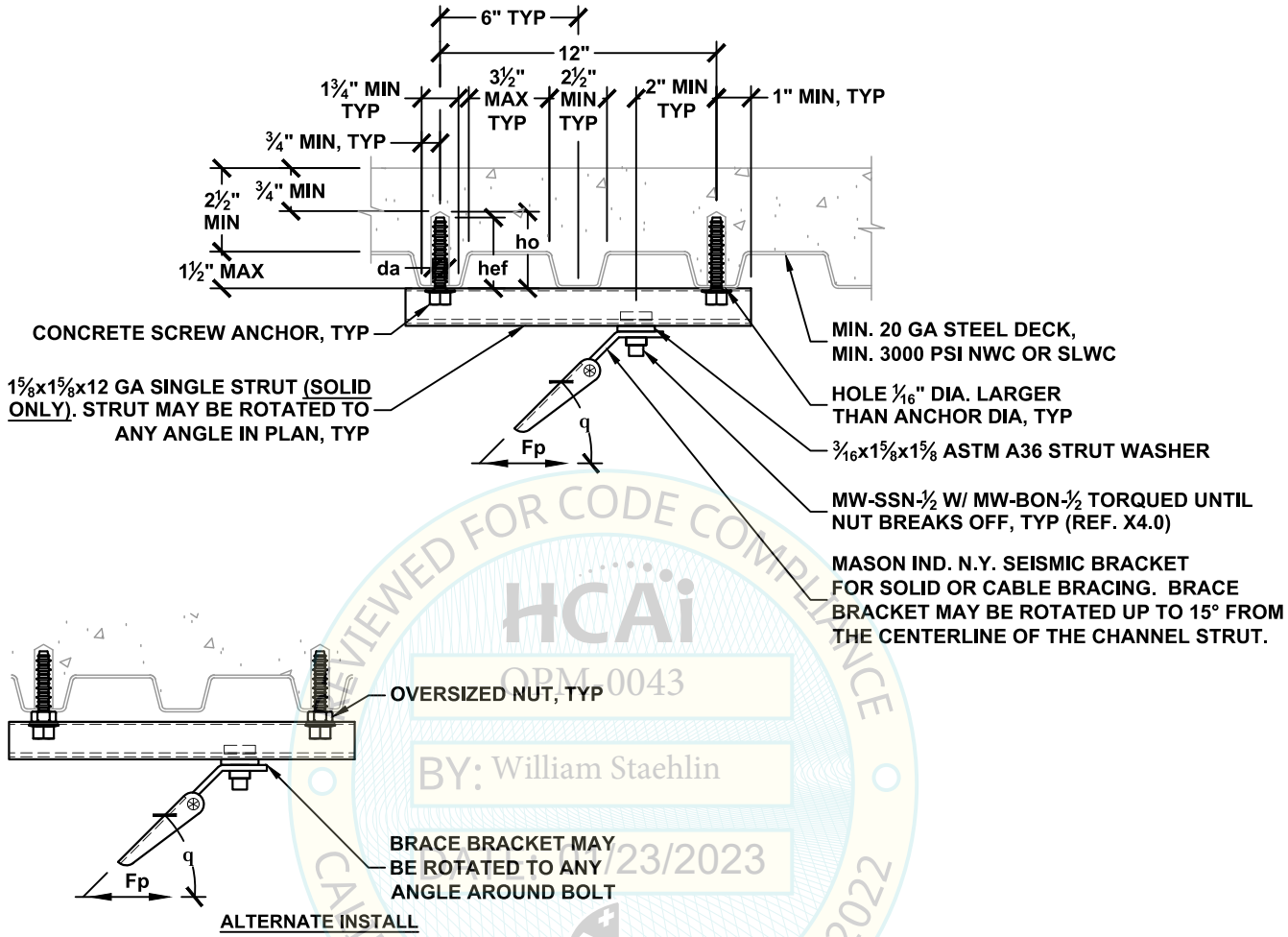

ALTERNATE INSTALL

REVIEWED FOR CODE COMPLIANCE
CALIFORNIA BUILDING CODE 2022
HCAi
OPM-0043
BY: William Staehlin
1/23/2023

BRACE BRACKET ATTACHMENT TYPE	ALLOWABLE LATERAL LOAD Fp LBS	$\Omega_0 = 2.0$[1] BRACE BRACKET ATTACHMENT TYPE	ALLOWABLE LATERAL LOAD Fp LBS	MAX BRACE RANGE q	DEWALT/POWERS SCREW-BOLT+ CONCRETE SCREW ANCHOR (ICC ESR-3889) SPECIAL INSPECTION REQ'D DIA. da INCH	MIN. EFF. EMBED. hef INCH	MIN. HOLE DEPTH ho INCH	MIN. SPACING Smin INCH	MIN. END DIST. Cmin INCH	MAX INSTALL. TORQUE FT-LBS
50A TO 50F	520	50A TO 50D	310	30°- 45°	⅜	2½	3⅜	7½	3¾	40
50A TO 50E	370	50A TO 50C	220	46°- 60°						
50A TO 50E	370	50A TO 50C	220	30°- 45°	½	1¾	2⅝	5¼	2⅝	45
50A TO 50D	260	50A TO 50B	150	46°- 60°						

SEE DETAIL N0.00 FOR SECTION NOTES

[1] OVERSTRENGTH FACTOR AS REQUIRED FOR ANCHORAGE TO CONCRETE.

MASON WEST
1601 E. Miraloma Ave. Placentia, CA 92870
TEL (714) 630 - 0701, www.masonwest.com

Jiefu "Jeff" Zhang, SE
California SE No. S5270

PAGE
N2.75

SEISMIC BRACKET ATTACHMENT TO CONCRETE FILLED METAL DECK WITH (2) CONCRETE SCREW ANCHORS

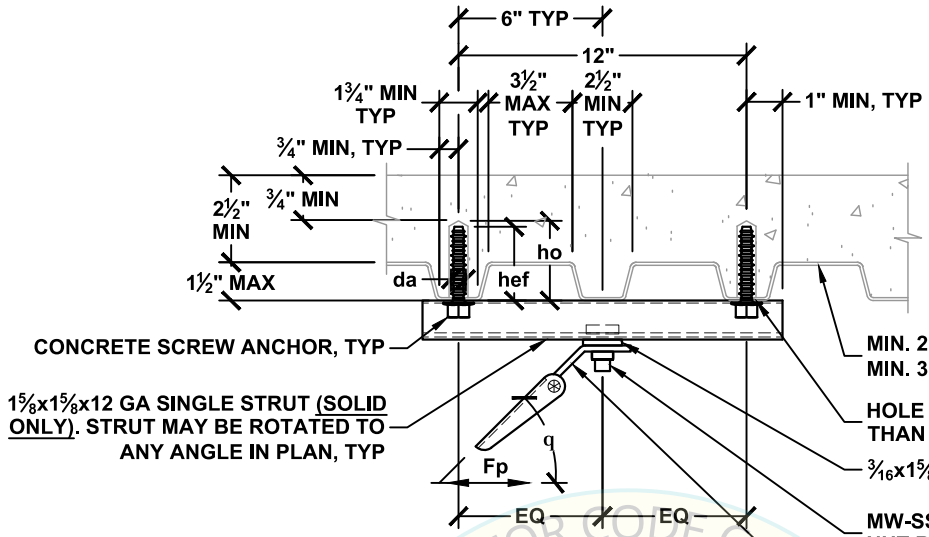

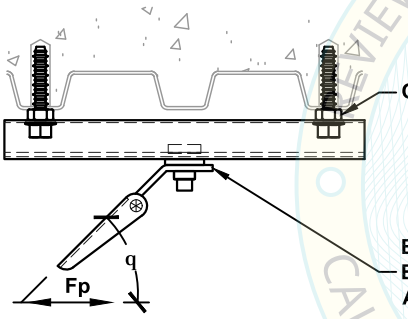

ALTERNATE INSTALL

REVIEWED FOR CODE COMPLIANCE
CALIFORNIA BUILDING CODE 2022
HCAi
OPM-0043
BY: William Staehlin
1/23/2023

BRACE BRACKET ATTACHMENT TYPE	ALLOWABLE LATERAL LOAD Fp LBS	$\Omega_0 = 2.0$[1] BRACE BRACKET ATTACHMENT TYPE	$\Omega_0 = 2.0$[1] ALLOWABLE LATERAL LOAD Fp LBS	MAX BRACE RANGE q	DEWALT/POWERS SCREW-BOLT+ CONCRETE SCREW ANCHOR (ICC ESR-3889) SPECIAL INSPECTION REQ'D DIA. da INCH	MIN. EFF. EMBED. hef INCH	MIN. HOLE DEPTH ho INCH	MIN. SPACING Smin INCH	MIN. END DIST. Cmin INCH	MAX INSTALL. TORQUE FT-LBS
50A TO 50G	620	50A TO 50F	530	30°- 45°	⅜	2½	3⅜	7½	3¾	40
50A TO 50F	530	50A TO 50E	380	46°- 60°						
50A TO 50G	620	50A TO 50E	390	30°- 45°	½	1¾	2⅝	5¼	2⅝	45
50A TO 50E	440	50A TO 50D	270	46°- 60°						

SEE DETAIL N0.00 FOR SECTION NOTES

[1] OVERSTRENGTH FACTOR AS REQUIRED FOR ANCHORAGE TO CONCRETE.

MASON WEST
1601 E. Miraloma Ave. Placentia, CA 92870
TEL (714) 630 - 0701, www.masonwest.com

Jiefu "Jeff" Zhang, SE
California SE No. S5270

PAGE
N2.75.1

SEISMIC BRACKET ATTACHMENT TO CONCRETE FILLED METAL DECK WITH (1) HILTI KCM-MD-SP/LP CONCRETE INSERT

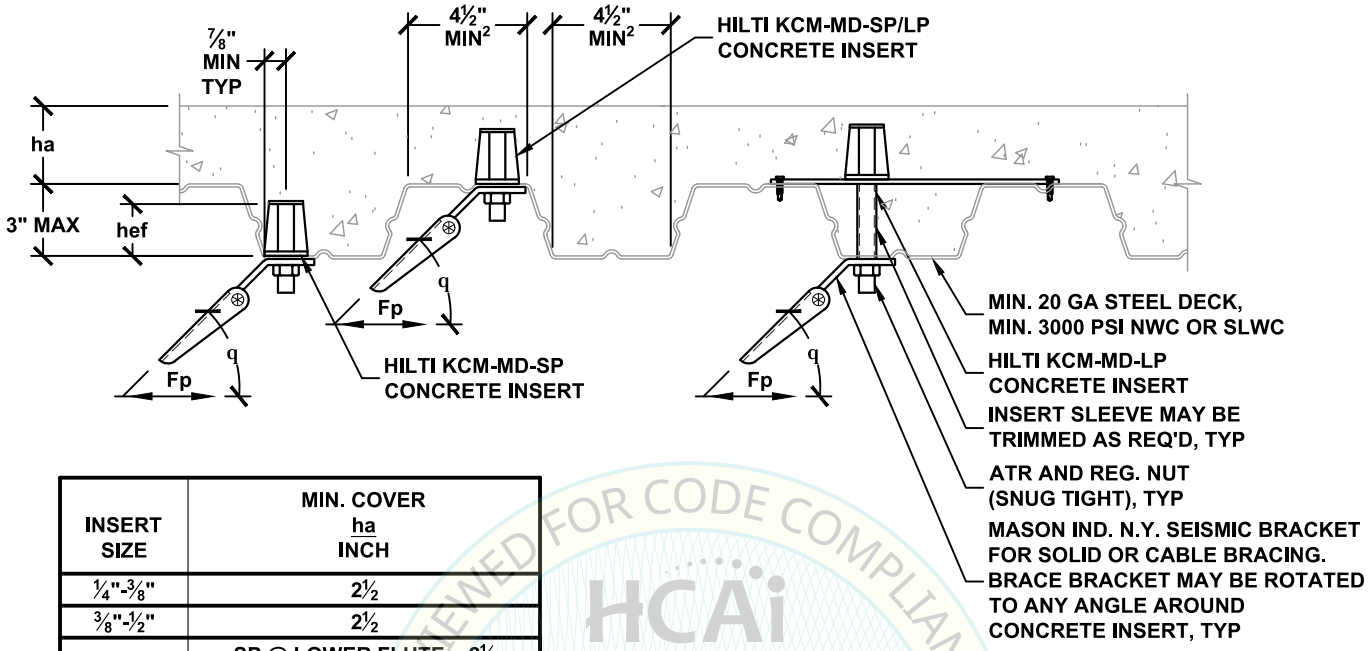

INSERT SIZE	MIN. COVER ha INCH
¼"-⅜"	2½
⅜"-½"	2½
⅜"-½"-⅝"	SP @ LOWER FLUTE = 2½ SP @ UPPER FLUTE = 3¼
⅝"-¾"	SP @ LOWER FLUTE = 2½ SP @ UPPER FLUTE = 3¼ LP @ EITHER FLUTE = 3¼

BRACE BRACKET ATTACHMENT TYPE	ALLOWABLE LATERAL LOAD Fp LBS	Ω_0 = 2.0[1] BRACE BRACKET ATTACHMENT TYPE	Ω_0 = 2.0[1] ALLOWABLE LATERAL LOAD Fp LBS	MAX BRACE RANGE q	ATR DIA. INCH	HILTI KCM-MD-SP/LP CONCRETE INSERT (ICC ESR-4145) SPECIAL INSPECTION REQ'D: INSERT SIZE	MIN. EFF. EMBED hef INCH	MIN. SPACING Smin INCH	MIN. END DIST. Cmin INCH
38A TO 38F	480	38A TO 38D	290	30°- 45°	⅜	¼"-⅜"	1¾	5½	2¾
38A TO 38D	310	38A TO 38C	190	46°- 60°					
50A TO 50G	620	50A TO 50E	370	30°- 45°	½	⅜"-½"	2	6	3
50A TO 50E	410	50A TO 50C	240	46°- 60°					
63A TO 63H	730	63A TO 63E	440	30°- 45°	⅝	⅜"-½"-⅝"	2½	7½	3¾
63A TO 63F	470	63A TO 63D	280	46°- 60°					
75A TO 75H	730	75A TO 75E	440	30°- 45°	¾	⅝"-¾"	2½	7½	3¾
75A TO 75F	470	75A TO 75D	280	46°- 60°					

SEE DETAIL N0.00 FOR SECTION NOTES

[1] OVERSTRENGTH FACTOR AS REQUIRED FOR ANCHORAGE TO CONCRETE.

[2] MIN. FLUTE WIDTH MAY BE REDUCED TO 3⅞" MIN. FOR INSERT INSTALLED OVER UPPER FLUTE OR KCM-MD-SP ¼"-⅜", KCM-MD-SP ⅜"-½", KCM-MD-LP ⅜"-½", OR KCM-MD-LP ⅝"-¾" INSTALLED OVER LOWER FLUTE.

REVIEWED FOR CODE COMPLIANCE
HCAi
OPM-0043
BY: William Staehlin
DATE: 01/23/2023
CALIFORNIA BUILDING CODE, 2022

MASON WEST
1601 E. Miraloma Ave. Placentia, CA 92870
TEL (714) 630 - 0701, www.masonwest.com

Jiefu "Jeff" Zhang, SE
California SE No. S5270

PAGE
N2.80

SEISMIC BRACKET ATTACHMENT
TO CONCRETE FILLED METAL DECK
WITH (1) HILTI KCM-MD-SP/LP CONCRETE INSERT AT UPPER FLUTE

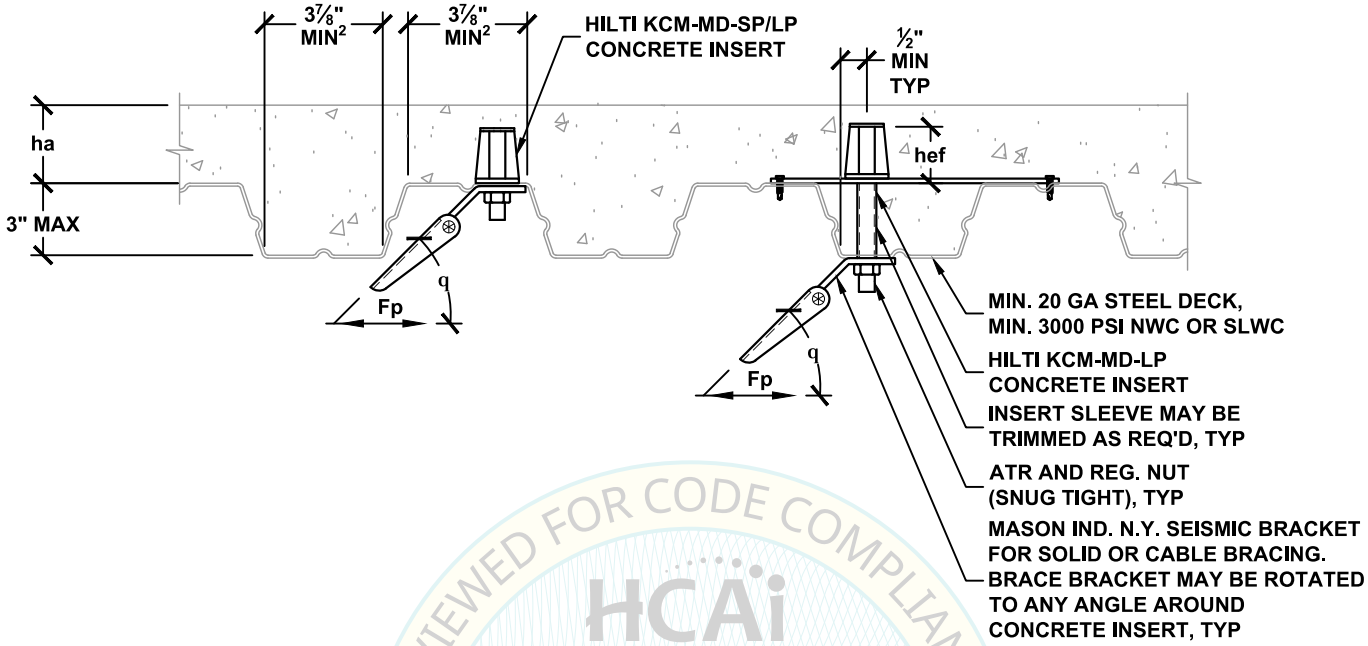

REVIEWED FOR CODE COMPLIANCE
HCAi
OPM-0043
BY: William Staehlin
DATE: 01/23/2023
CALIFORNIA BUILDING CODE 2022

BRACE BRACKET ATTACHMENT TYPE	ALLOWABLE LATERAL LOAD Fp LBS	$\Omega_0 = 2.0$[1] BRACE BRACKET ATTACHMENT TYPE	ALLOWABLE LATERAL LOAD Fp LBS	MAX BRACE RANGE q	ATR DIA. INCH	HILTI KCM-MD-SP/LP CONCRETE INSERT (ICC ESR-4145) SPECIAL INSPECTION REQ'D INSERT SIZE	MIN. EFF. EMBED hef INCH	MIN. COVER ha INCH	MIN. SPACING Smin INCH	MIN. END DIST. Cmin INCH
38A TO 38J	860	38A TO 38F	520	30°- 45°	⅜	¼"-⅜"	1¾	2½	5½	2¾
38A TO 38G	590	38A TO 38E	350	46°- 60°						
50A TO 50K	1120	50A TO 50G	670	30°- 45°	½	⅜"-½"	2	2½	6	3
50A TO 50H	760	50A TO 50F	450	46°- 60°						
63A TO 63L	1580	63A TO 63J	950	30°- 45°	⅝	⅜"-½"-⅝"	2½	3¼	7½	3¾
63A TO 63K	1030	63A TO 63G	620	46°- 60°						
75A TO 75L	1380	75A TO 75H	830	30°- 45°	¾	⅝"-¾"	2½	3¼	7½	3¾
75A TO 75J	940	75A TO 75F	560	46°- 60°						

SEE DETAIL N0.00 FOR SECTION NOTES

[1] OVERSTRENGTH FACTOR AS REQUIRED FOR ANCHORAGE TO CONCRETE.

MASON WEST
1601 E. Miraloma Ave. Placentia, CA 92870
TEL (714) 630 - 0701, www.masonwest.com

Jiefu "Jeff" Zhang, SE
California SE No. S5270

PAGE
N2.80.1

SEISMIC BRACKET ATTACHMENT
TO CONCRETE FILLED METAL DECK
WITH (1) DEWALT/POWERS BANG-IT+ CONCRETE INSERT AT LOWER FLUTE

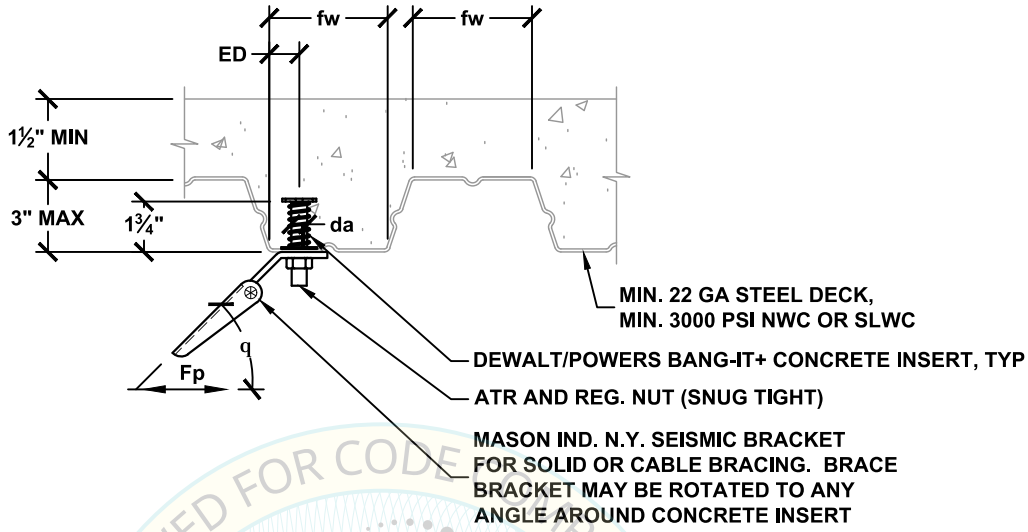

MIN FLUTE WIDTH fw INCH	MIN EDGE DIST ED INCH
3⅞	¾
4½	1⅛

BRACE BRACKET ATTACHMENT TYPE	ALLOWABLE LATERAL LOAD Fp LBS	BRACE BRACKET ATTACHMENT TYPE	ALLOWABLE LATERAL LOAD Fp LBS	MAX BRACE RANGE q	ATR DIA. INCH	DEWALT/POWERS BANG-IT+ CONCRETE INSERT (ICC ESR-3657) SPECIAL INSPECTION REQ'D: DIA. da INCH	MIN. SPACING Smin INCH	MIN. END DIST. Cmin INCH
	$\Omega_0 = 2.0$[1]							
38A TO 38E	390	38A TO 38C	230	30°- 45°	⅜	0.7 (⅜"Ø)	5¼	2⅝
38A TO 38D	260	38A TO 38B	160	46°- 60°				
50A TO 50E	390	50A TO 50C	230	30°- 45°	½	0.7 (½"Ø)	5¼	2⅝
50A TO 50D	260	50A TO 50B	160	46°- 60°				
63A TO 63E	410	63A TO 63C	240	30°- 45°	⅝	1.0 (⅝"Ø)	5¼	2⅝
63A TO 63D	270	63A TO 63B	160	46°- 60°				
75A TO 75E	410	75A TO 75C	240	30°- 45°	¾	1.0 (¾"Ø)	5¼	2⅝
75A TO 75D	270	75A TO 75B	160	46°- 60°				

SEE DETAIL N0.00 FOR SECTION NOTES

[1] OVERSTRENGTH FACTOR AS REQUIRED FOR ANCHORAGE TO CONCRETE.

REVIEWED FOR CODE COMPLIANCE
HCAi
OPM-0043
BY: William Staehlin
DATE: 01/23/2023
CALIFORNIA BUILDING CODE, 2022

MASON WEST
1601 E. Miraloma Ave. Placentia, CA 92870
TEL (714) 630 - 0701, www.masonwest.com

Jiefu "Jeff" Zhang, SE
California SE No. S5270

PAGE
N2.90

SEISMIC BRACKET ATTACHMENT TO CONCRETE FILLED METAL DECK WITH (2) DEWALT/POWERS BANG-IT+ CONCRETE INSERT AT LOWER FLUTE

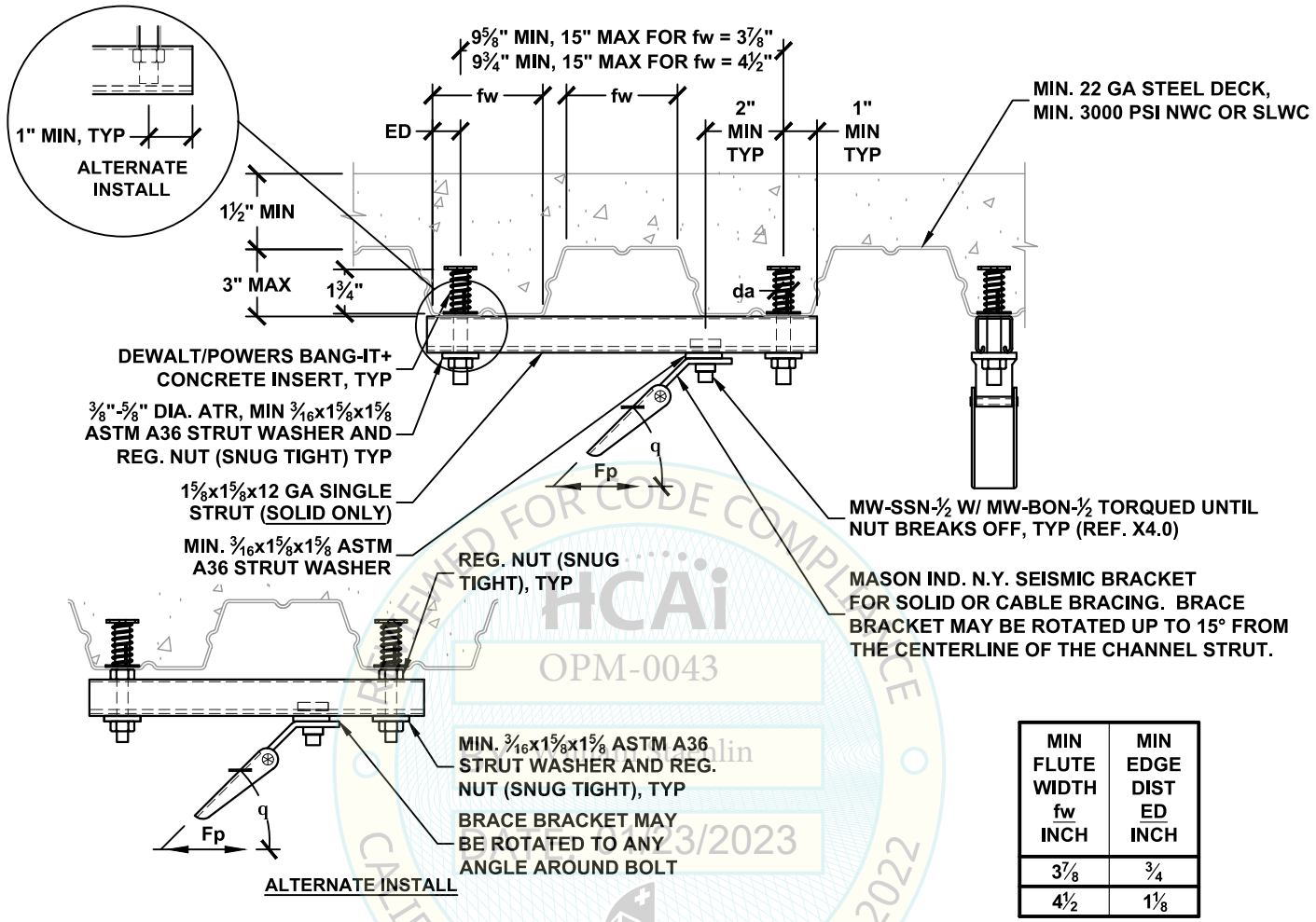

MIN FLUTE WIDTH fw INCH	MIN EDGE DIST ED INCH
3⅞	¾
4½	1⅛

BRACE BRACKET ATTACHMENT TYPE	ALLOWABLE LATERAL LOAD Fp LBS	$\Omega_0 = 2.0^1$ BRACE BRACKET ATTACHMENT TYPE	$\Omega_0 = 2.0^1$ ALLOWABLE LATERAL LOAD Fp LBS	MAX BRACE RANGE q	DEWALT/POWERS BANG-IT+ CONCRETE INSERT (ICC ESR-3657) SPECIAL INSPECTION REQ'D DIA. da INCH	MIN. SPACING Smin INCH	MIN. END DIST. Cmin INCH
50A TO 50F	450	50A TO 50D	270	30°- 45°	0.7 (⅜"Ø)	5¼	2⅝
50A TO 50D	300	50A TO 50C	180	46°- 60°			
50A TO 50F	450	50A TO 50D	270	30°- 45°	0.7 (½"Ø)	5¼	2⅝
50A TO 50D	300	50A TO 50C	180	46°- 60°			
50A TO 50F	470	50A TO 50D	280	30°- 45°	1.0 (⅝"Ø)	5¼	2⅝
50A TO 50D	310	50A TO 50C	190	46°- 60°			

SEE DETAIL N0.00 FOR SECTION NOTES

[1] OVERSTRENGTH FACTOR AS REQUIRED FOR ANCHORAGE TO CONCRETE.

MASON WEST
1601 E. Miraloma Ave. Placentia, CA 92870
TEL (714) 630 - 0701, www.masonwest.com

Jiefu "Jeff" Zhang, SE
California SE No. S5270

PAGE
N2.91

REVIEWED FOR CODE COMPLIANCE
HCAi
OPM-0043
William Staehlin
1/23/2023
CALIFORNIA BUILDING CODE 2022

SEISMIC BRACKET ATTACHMENT
TO CONCRETE FILLED METAL DECK
WITH (2) DEWALT/POWERS BANG-IT+ CONCRETE INSERT AT LOWER FLUTE

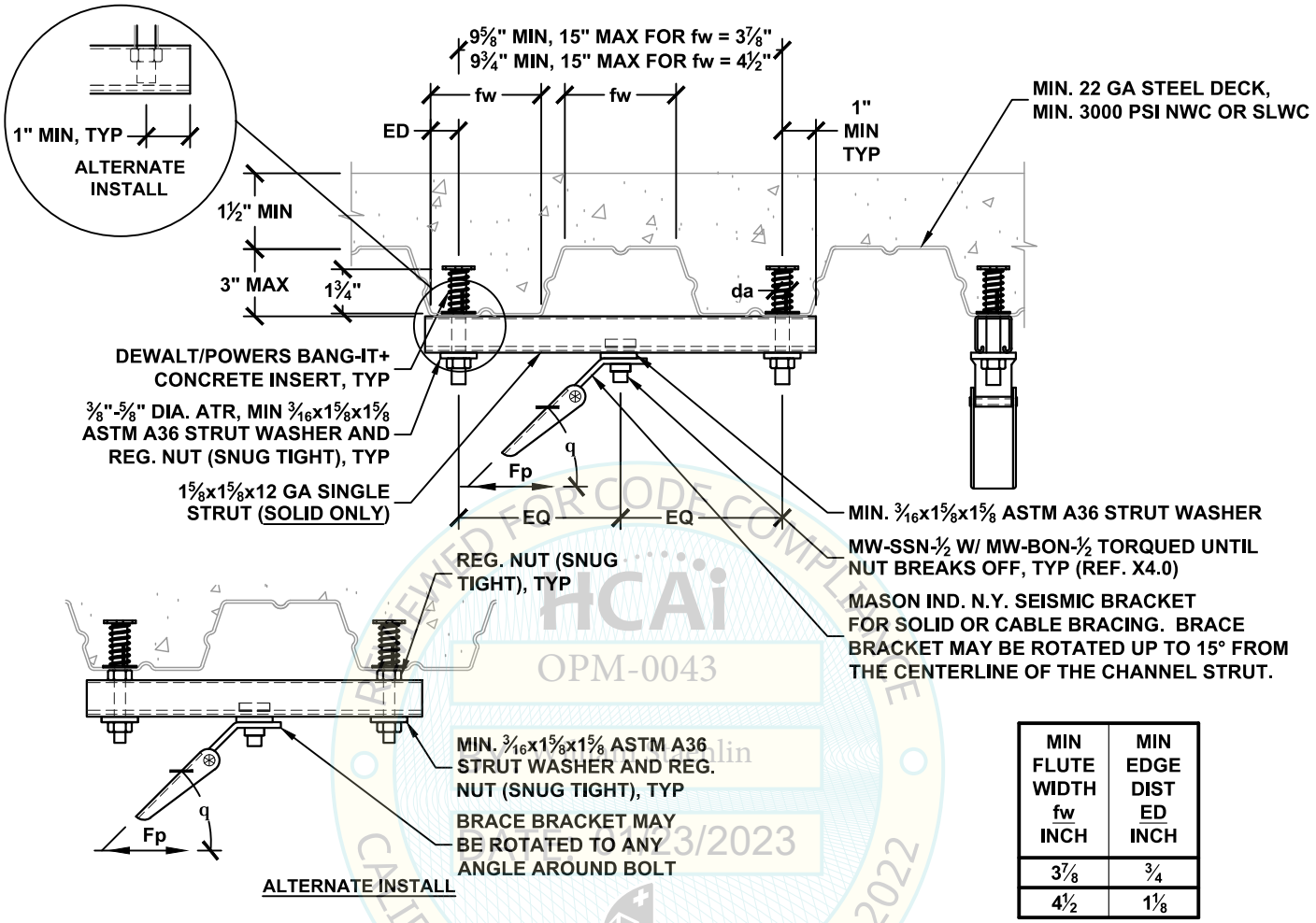

MIN FLUTE WIDTH fw INCH	MIN EDGE DIST ED INCH
3⅞	¾
4½	1⅛

BRACE BRACKET ATTACHMENT TYPE	ALLOWABLE LATERAL LOAD Fp LBS	$\Omega_0 = 2.0^1$ BRACE BRACKET ATTACHMENT TYPE	$\Omega_0 = 2.0^1$ ALLOWABLE LATERAL LOAD Fp LBS	MAX BRACE RANGE q	DEWALT/POWERS BANG-IT+ CONCRETE INSERT (ICC ESR-3657) SPECIAL INSPECTION REQ'D DIA. da INCH	MIN. SPACING Smin INCH	MIN. END DIST. Cmin INCH
50A TO 50G	620	50A TO 50F	460	30°- 45°	0.7 (⅜"Ø)	5¼	2⅝
50A TO 50F	520	50A TO 50D	310	46°- 60°			
50A TO 50G	620	50A TO 50F	460	30°- 45°	0.7 (½"Ø)	5¼	2⅝
50A TO 50F	520	50A TO 50D	310	46°- 60°			
50A TO 50G	650	50A TO 50F	490	30°- 45°	1.0 (⅝"Ø)	5¼	2⅝
50A TO 50F	530	50A TO 50D	320	46°- 60°			

SEE DETAIL N0.00 FOR SECTION NOTES

[1] OVERSTRENGTH FACTOR AS REQUIRED FOR ANCHORAGE TO CONCRETE.

MASON WEST
1601 E. Miraloma Ave. Placentia, CA 92870
TEL (714) 630 - 0701, www.masonwest.com

Jiefu "Jeff" Zhang, SE
California SE No. S5270

PAGE
N2.91.1

REVIEWED FOR CODE COMPLIANCE
HCAi
OPM-0043
William Staehlin
1/23/2023
CALIFORNIA BUILDING CODE 2022

SEISMIC BRACKET ATTACHMENT
TO CONCRETE FILLED METAL DECK
WITH (2) DEWALT/POWERS BANG-IT+ CONCRETE INSERT AT LOWER FLUTE

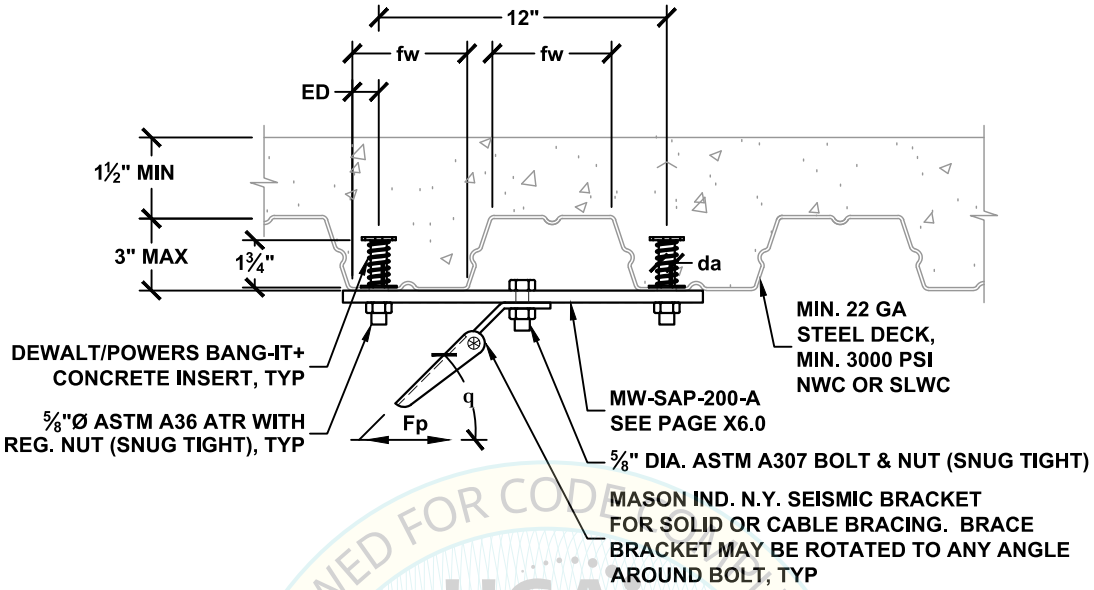

REVIEWED FOR CODE COMPLIANCE
HCAi
OPM-0043
BY: William Staehlin
DATE: 01/23/2023
CALIFORNIA BUILDING CODE, 2022

MIN FLUTE WIDTH fw INCH	MIN EDGE DIST ED INCH
3⅞	¾
4½	1⅛

BRACE BRACKET ATTACHMENT TYPE	ALLOWABLE LATERAL LOAD Fp LBS	$\Omega_0 = 2.0$[1] BRACE BRACKET ATTACHMENT TYPE	$\Omega_0 = 2.0$[1] ALLOWABLE LATERAL LOAD Fp LBS	MAX BRACE RANGE q	DEWALT/POWERS BANG-IT+ CONCRETE INSERT (ICC ESR-3657) SPECIAL INSPECTION REQ'D DIA. da INCH	MIN. SPACING Smin INCH	MIN. END DIST. Cmin INCH
63A TO 63H	810	63A TO 63F	490	30°- 45°	1.0 (⅝"Ø)	5¼	2⅝
63A TO 63F	540	63A TO 63D	320	46°- 60°			

SEE DETAIL N0.00 FOR SECTION NOTES

[1] OVERSTRENGTH FACTOR AS REQUIRED FOR ANCHORAGE TO CONCRETE.

MASON WEST
1601 E. Miraloma Ave. Placentia, CA 92870
TEL (714) 630 - 0701, www.masonwest.com

Jiefu "Jeff" Zhang, SE
California SE No. S5270

PAGE
N2.92

SEISMIC BRACKET ATTACHMENT
TO CONCRETE FILLED METAL DECK
WITH (4) DEWALT/POWERS BANG-IT+ CONCRETE INSERT AT LOWER FLUTE

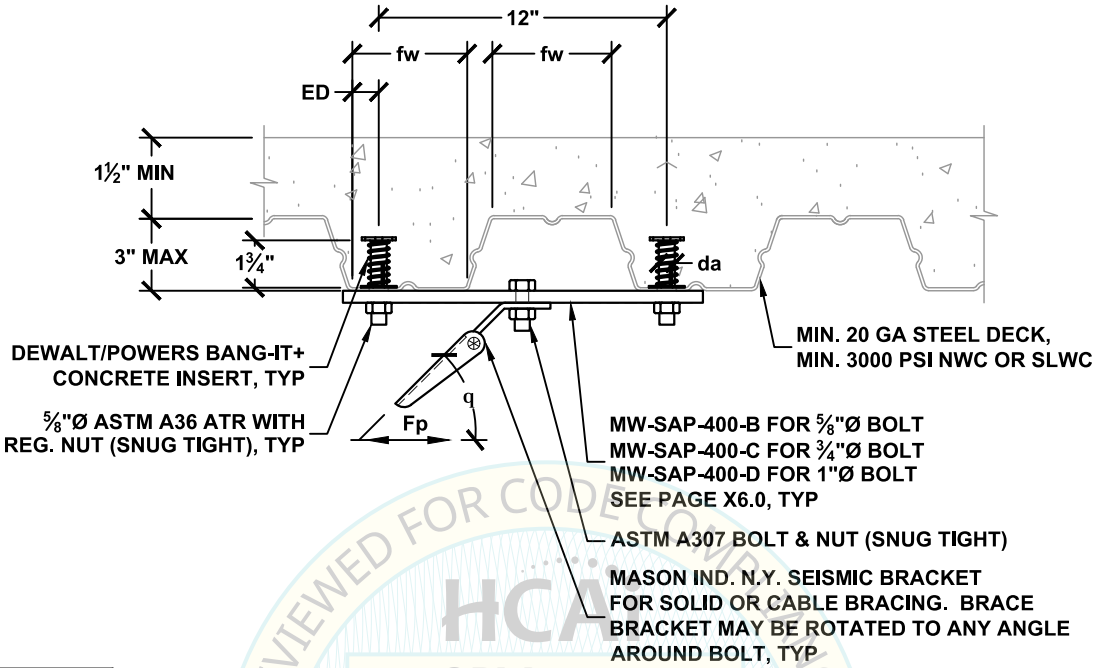

MIN FLUTE WIDTH fw INCH	MIN EDGE DIST ED INCH
3⅞	¾
4½	1⅛

BRACE BRACKET ATTACHMENT TYPE	ALLOWABLE LATERAL LOAD Fp LBS	Ω_0 = 2.0[1] BRACE BRACKET ATTACHMENT TYPE	Ω_0 = 2.0[1] ALLOWABLE LATERAL LOAD Fp LBS	MAX BRACE RANGE q	BOLT DIA. INCH	DEWALT/POWERS BANG-IT+ CONCRETE INSERT (ICC ESR-3657) SPECIAL INSPECTION REQ'D DIA. da INCH	MIN. SPACING Smin INCH	MIN. END DIST. Cmin INCH
63A TO 63M	1630	63A TO 63J	980	30°- 45°	⅝	1.0 (⅝"Ø)	5¼	2⅝
63A TO 63K	1070	63A TO 63G	640	46°- 60°	⅝			
75A TO 75M	1630	75A TO 75J	980	30°- 45°	¾	1.0 (⅝"Ø)	5¼	2⅝
75A TO 75K	1070	75A TO 75G	640	46°- 60°	¾			
100A TO 100M	1630	100A TO 100J	980	30°- 45°	1	1.0 (⅝"Ø)	5¼	2⅝
100A TO 100K	1070	100A TO 100G	640	46°- 60°	1			

SEE DETAIL N0.00 FOR SECTION NOTES

[1] OVERSTRENGTH FACTOR AS REQUIRED FOR ANCHORAGE TO CONCRETE.

REVIEWED FOR CODE COMPLIANCE
HCAI
OPM-0043
BY: William Staehlin
DATE: 01/23/2023
CALIFORNIA BUILDING CODE, 2022

MASON WEST
1601 E. Miraloma Ave. Placentia, CA 92870
TEL (714) 630 - 0701, www.masonwest.com

Jiefu "Jeff" Zhang, SE
California SE No. S5270

PAGE
N2.93

SEISMIC BRACKET ATTACHMENT
TO CONCRETE FILLED METAL DECK
WITH (1) DEWALT/POWERS BANG-IT+ CONCRETE INSERT AT LOWER FLUTE

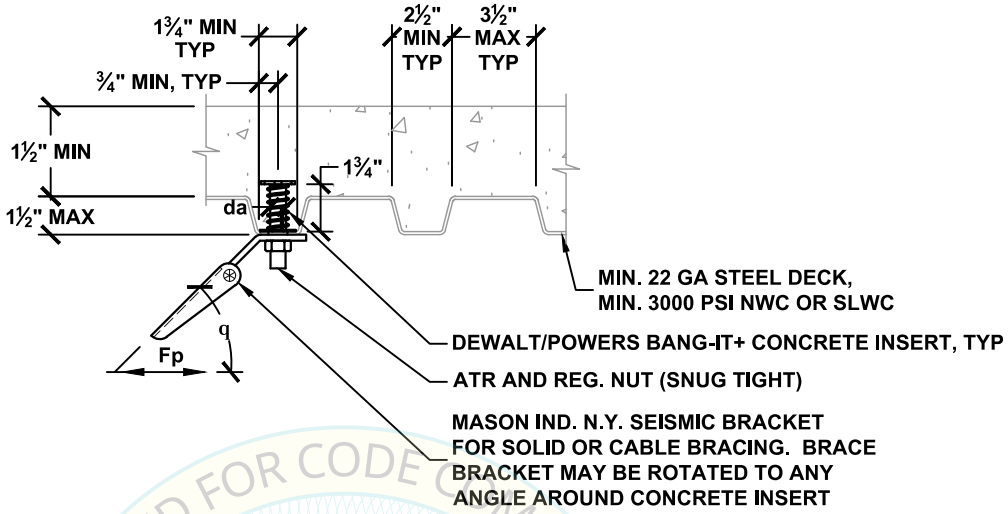

REVIEWED FOR CODE COMPLIANCE
HCAi
OPM-0043
BY: William Staehlin
DATE: 01/23/2023
CALIFORNIA BUILDING CODE, 2022

BRACE BRACKET ATTACHMENT TYPE	ALLOWABLE LATERAL LOAD Fp LBS	$\Omega_0 = 2.0$[1] BRACE BRACKET ATTACHMENT TYPE	$\Omega_0 = 2.0$[1] ALLOWABLE LATERAL LOAD Fp LBS	MAX BRACE RANGE q	ATR DIA. INCH	DEWALT/POWERS BANG-IT+ CONCRETE INSERT (ICC ESR-3657) SPECIAL INSPECTION REQ'D DIA. da INCH	MIN. SPACING Smin INCH	MIN. END DIST. Cmin INCH
38A TO 38C	230	38A TO 38B	140	30°- 45°	⅜	0.7 (⅜"Ø)	5¼	2⅝
38A TO 38B	150	38A TO 38A	90	46°- 60°				
50A TO 50C	230	50A TO 50B	140	30°- 45°	½	0.7 (½"Ø)	5¼	2⅝
50A TO 50B	150	50A TO 50A	90	46°- 60°				
63A TO 63D	250	63A TO 63B	150	30°- 45°	⅝	1.0 (⅝"Ø)	5¼	2⅝
63A TO 63B	150	63A TO 63A	90	46°- 60°				
75A TO 75D	250	75A TO 75B	150	30°- 45°	¾	1.0 (¾"Ø)	5¼	2⅝
75A TO 75B	150	75A TO 75A	90	46°- 60°				

SEE DETAIL N0.00 FOR SECTION NOTES

[1] OVERSTRENGTH FACTOR AS REQUIRED FOR ANCHORAGE TO CONCRETE.

MASON WEST
1601 E. Miraloma Ave. Placentia, CA 92870
TEL (714) 630 - 0701, www.masonwest.com

Jiefu "Jeff" Zhang, SE
California SE No. S5270

PAGE
N2.94

SEISMIC BRACKET ATTACHMENT TO CONCRETE FILLED METAL DECK WITH (2) DEWALT/POWERS BANG-IT+ CONCRETE INSERT AT LOWER FLUTE

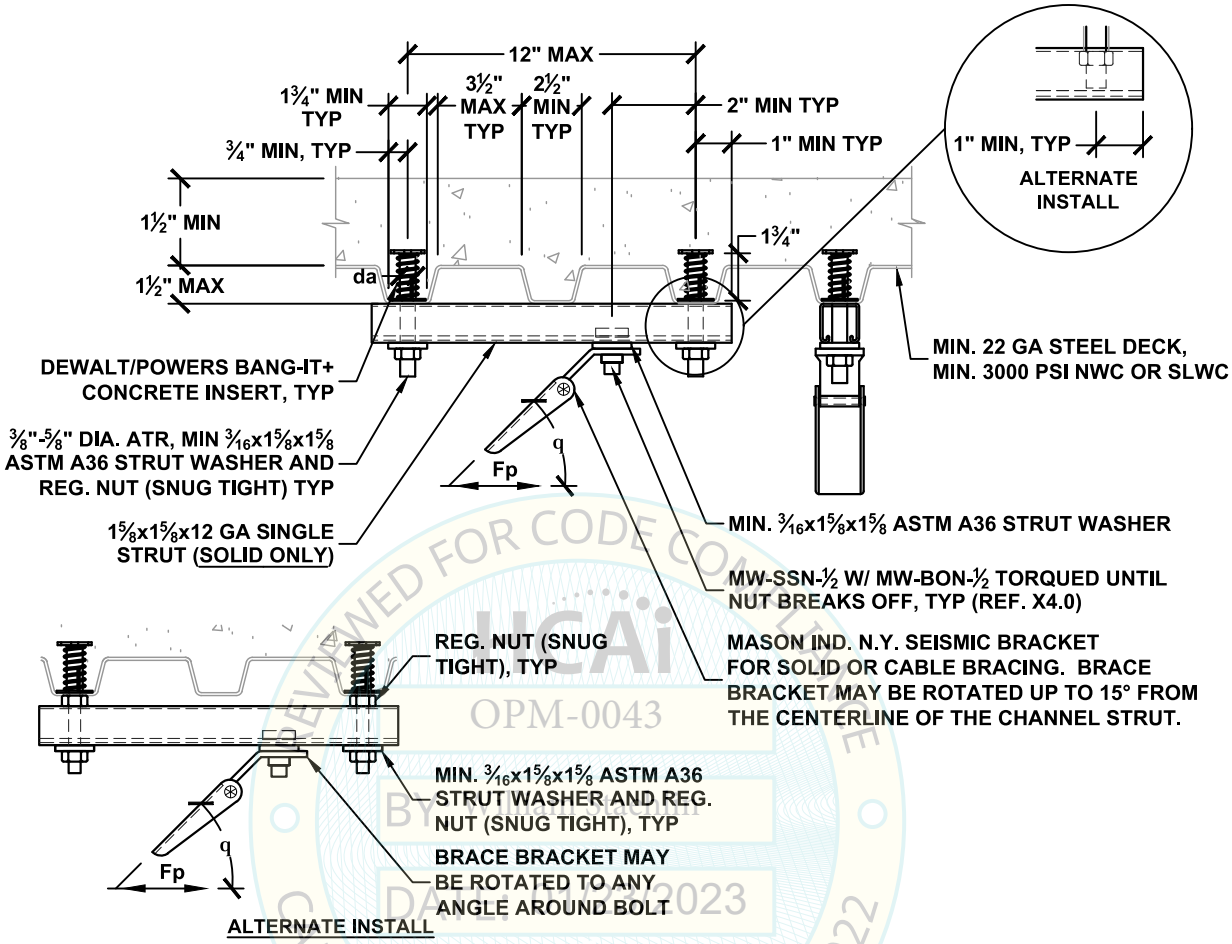

BRACE BRACKET ATTACHMENT TYPE	ALLOWABLE LATERAL LOAD Fp LBS	$\Omega_0 = 2.0^1$ BRACE BRACKET ATTACHMENT TYPE	$\Omega_0 = 2.0^1$ ALLOWABLE LATERAL LOAD Fp LBS	MAX BRACE RANGE q	DEWALT/POWERS BANG-IT+ CONCRETE INSERT (ICC ESR-3657) SPECIAL INSPECTION REQ'D DIA. da INCH	MIN. SPACING Smin INCH	MIN. END DIST. Cmin INCH
50A TO 50D	280	50A TO 50B	170	30°- 45°	0.7 (⅜"Ø)	5¼	2⅝
50A TO 50C	180	50A TO 50A	110	46°- 60°			
50A TO 50D	280	50A TO 50B	170	30°- 45°	0.7 (½"Ø)	5¼	2⅝
50A TO 50C	180	50A TO 50A	110	46°- 60°			
50A TO 50D	290	50A TO 50C	180	30°- 45°	1.0 (⅝"Ø)	5¼	2⅝
50A TO 50C	180	50A TO 50A	110	46°- 60°			

SEE DETAIL N0.00 FOR SECTION NOTES

[1] OVERSTRENGTH FACTOR AS REQUIRED FOR ANCHORAGE TO CONCRETE.

MASON WEST
1601 E. Miraloma Ave. Placentia, CA 92870
TEL (714) 630 - 0701, www.masonwest.com

Jiefu "Jeff" Zhang, SE
California SE No. S5270

PAGE **N2.95**

REVIEWED FOR CODE COMPLIANCE
UCAi
OPM-0043
BY William Staehlin
DATE: 1/23/2023
CALIFORNIA BUILDING CODE 2022

SEISMIC BRACKET ATTACHMENT
TO CONCRETE FILLED METAL DECK
WITH (2) DEWALT/POWERS BANG-IT+ CONCRETE INSERT AT LOWER FLUTE

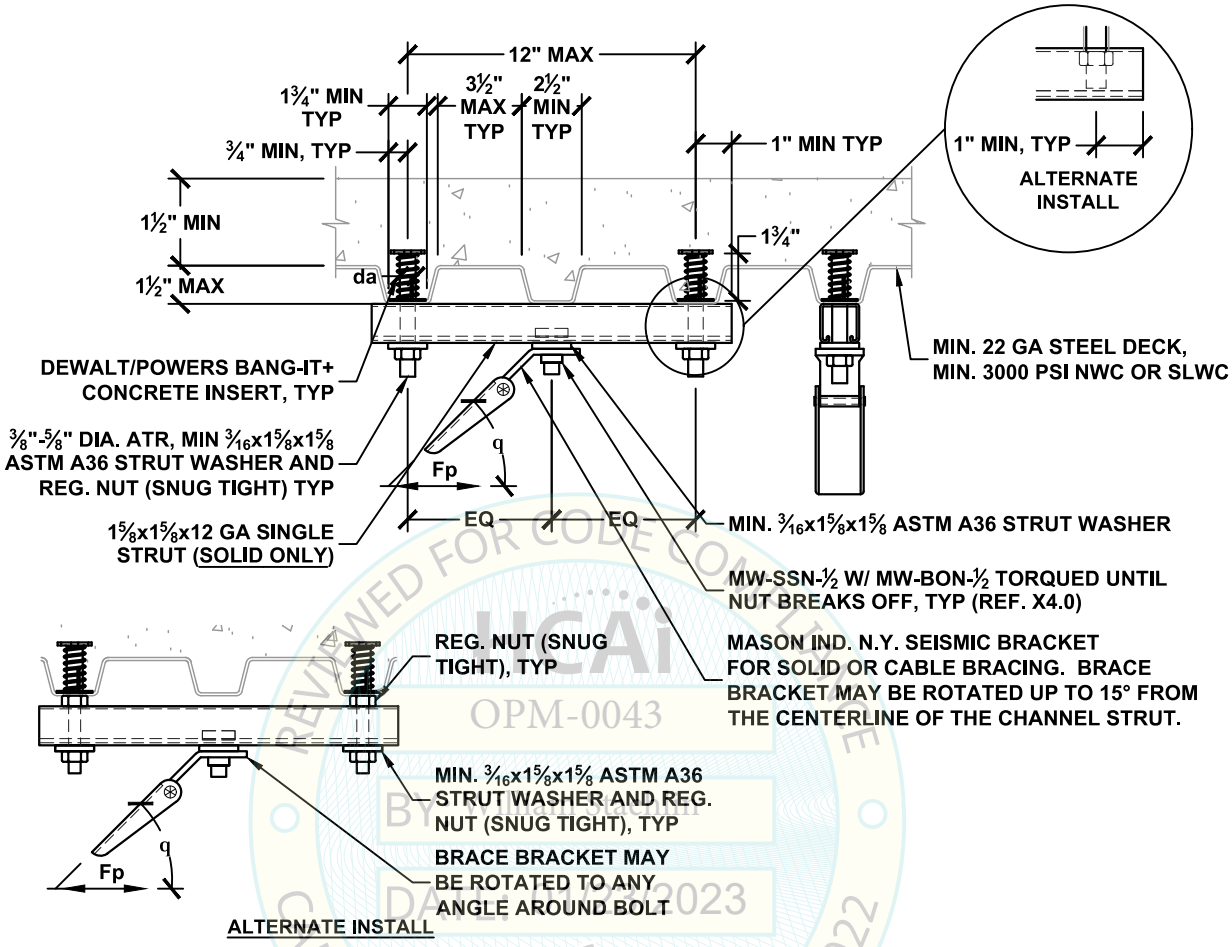

BRACE BRACKET ATTACHMENT TYPE	ALLOWABLE LATERAL LOAD Fp LBS	$\Omega_0 = 2.0^1$ BRACE BRACKET ATTACHMENT TYPE	$\Omega_0 = 2.0^1$ ALLOWABLE LATERAL LOAD Fp LBS	MAX BRACE RANGE q	DEWALT/POWERS BANG-IT+ CONCRETE INSERT (ICC ESR-3657) SPECIAL INSPECTION REQ'D DIA. da INCH	MIN. SPACING Smin INCH	MIN. END DIST. Cmin INCH
50A TO 50F	470	50A TO 50D	280	30°- 45°	0.7 (⅜"Ø)	5¼	2⅝
50A TO 50D	300	50A TO 50C	180	46°- 60°			
50A TO 50F	470	50A TO 50D	280	30°- 45°	0.7 (½"Ø)	5¼	2⅝
50A TO 50D	300	50A TO 50C	180	46°- 60°			
50A TO 50F	490	50A TO 50D	290	30°- 45°	1.0 (⅝"Ø)	5¼	2⅝
50A TO 50D	310	50A TO 50C	180	46°- 60°			

SEE DETAIL N0.00 FOR SECTION NOTES

[1] OVERSTRENGTH FACTOR AS REQUIRED FOR ANCHORAGE TO CONCRETE.

MASON WEST
1601 E. Miraloma Ave. Placentia, CA 92870
TEL (714) 630 - 0701, www.masonwest.com

Jiefu "Jeff" Zhang, SE
California SE No. S5270

PAGE
N2.95.1

REVIEWED FOR CODE COMPLIANCE BY HCAi OPM-0043 DATE: 1/23/2023 CALIFORNIA BUILDING CODE 2022

SEISMIC BRACKET ATTACHMENT TO CONCRETE FILLED METAL DECK WITH (1) DEWALT DDI+ CONCRETE INSERT

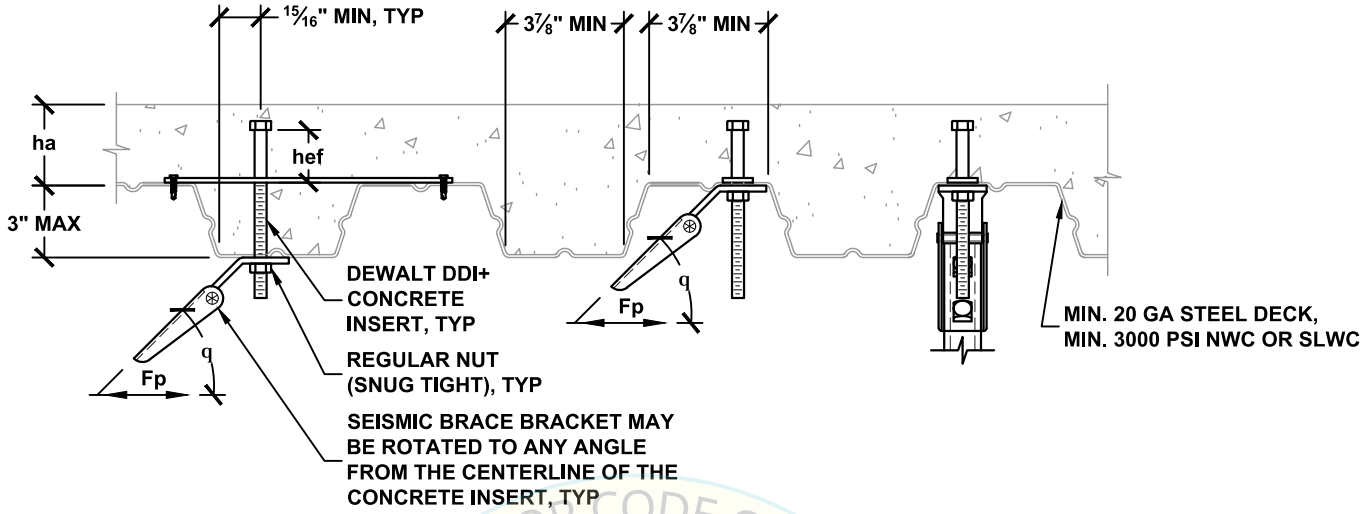

REVIEWED FOR CODE COMPLIANCE
HCAi
OPM-0043
BY: William Staehlin
DATE: 01/23/2023
CALIFORNIA BUILDING CODE, 2019

BRACE BRACKET ATTACHMENT TYPE	ALLOWABLE LATERAL LOAD Fp LBS	$\Omega_0 = 2.0^1$ BRACE BRACKET ATTACHMENT TYPE	$\Omega_0 = 2.0^1$ ALLOWABLE LATERAL LOAD Fp LBS	MAX BRACE RANGE q	DEWALT DDI+ CONCRETE INSERT (ICC ESR-3958) SPECIAL INSPECTION REQ'D DIA. da INCH	MIN. EFF. EMBED. hef INCH	MIN. COVER ha INCH	MIN. SPACING Smin INCH	MIN. END DIST. Cmin INCH
38A TO 38F	470	38A TO 38D	280	30°- 45°	⅜	1½	2	4½	2¼
38A TO 38D	340	38A TO 38C	210	46°- 60°					
50A TO 50H	710	50A TO 50E	420	30°- 45°	½	1¾	2½	5¼	2⅝
50A TO 50F	490	50A TO 50D	290	46°- 60°					
63A TO 63J	960	63A TO 63G	580	30°- 45°	⅝	2	3¼	6	3
63A TO 63G	640	63A TO 63E	380	46°- 60°					

SEE DETAIL N0.00 FOR SECTION NOTES

[1] OVERSTRENGTH FACTOR AS REQUIRED FOR ANCHORAGE TO CONCRETE.

MASON WEST
1601 E. Miraloma Ave. Placentia, CA 92870
TEL (714) 630 - 0701, www.masonwest.com

Jiefu "Jeff" Zhang, SE
California SE No. S5270

PAGE
N2.100

SEISMIC BRACKET ATTACHMENT
TO CONCRETE FILLED METAL DECK
WITH (1) CADDY CRLM CONCRETE INSERT AT LOWER FLUTE

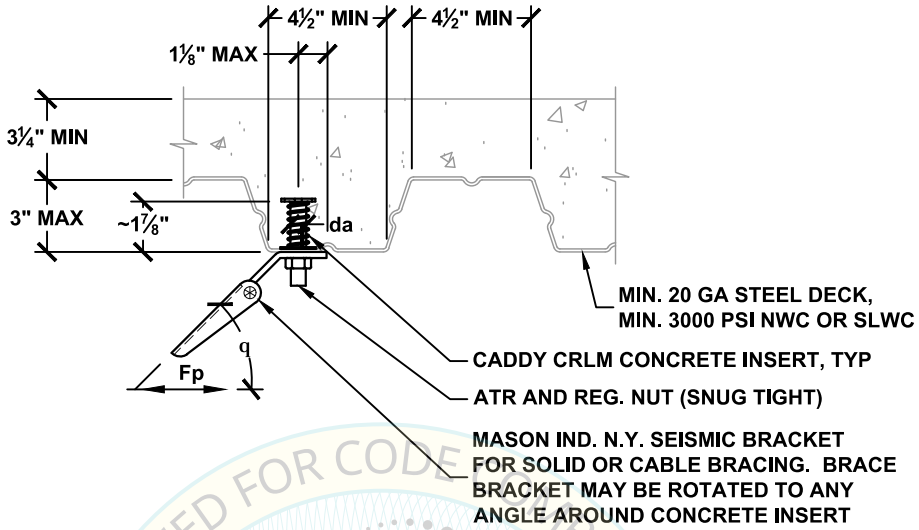

REVIEWED FOR CODE COMPLIANCE
CALIFORNIA BUILDING CODE 2022
HCAi
OPM-0043
BY: William Staehlin
DATE: 01/23/2023

BRACE BRACKET ATTACHMENT TYPE	ALLOWABLE LATERAL LOAD Fp LBS	$\Omega_0 = 2.0$[1] BRACE BRACKET ATTACHMENT TYPE	$\Omega_0 = 2.0$[1] ALLOWABLE LATERAL LOAD Fp LBS	MAX BRACE RANGE q	ATR DIA. INCH	CADDY CRLM CONCRETE INSERT (ICC ESR-3864) SPECIAL INSPECTION REQ'D DIA. da INCH	MIN. SPACING Smin[2] INCH	MIN. END DIST. Cmin INCH
38A TO 38E	390	38A TO 38C	230	30°- 45°	⅜	0.61 (⅜"Ø)	6	3
38A TO 38D	290	38A TO 38B	170	46°- 60°				
50A TO 50F	550	50A TO 50D	330	30°- 45°	½	0.71 (½"Ø)	6	3
50A TO 50E	370	50A TO 50C	220	46°- 60°				

SEE DETAIL N0.00 FOR SECTION NOTES
[1] OVERSTRENGTH FACTOR AS REQUIRED FOR ANCHORAGE TO CONCRETE.
[2] AXIAL SPACING PARALLEL TO FLUTE DIRECTION.

MASON WEST
1601 E. Miraloma Ave. Placentia, CA 92870
TEL (714) 630 - 0701, www.masonwest.com

Jiefu "Jeff" Zhang, SE
California SE No. S5270

PAGE
N2.110

SEISMIC BRACKET ATTACHMENT
TO CONCRETE FILLED METAL DECK
WITH (1) CADDY CRLM CONCRETE INSERT AT UPPER FLUTE

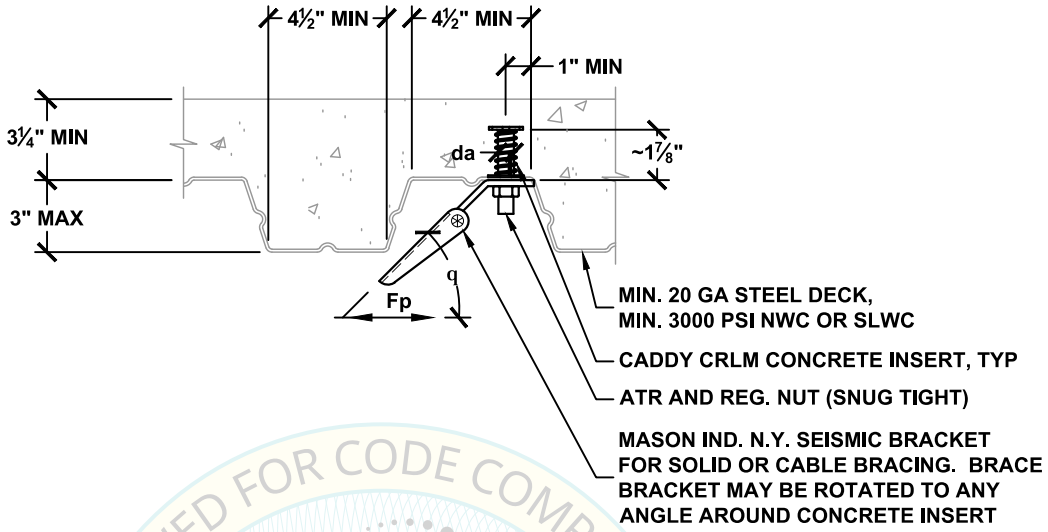

REVIEWED FOR CODE COMPLIANCE
HCAi
OPM-0043
BY: William Staehlin
DATE: 01/23/2023
CALIFORNIA BUILDING CODE 2022

BRACE BRACKET ATTACHMENT TYPE	ALLOWABLE LATERAL LOAD Fp LBS	$\Omega_0 = 2.0$[1] BRACE BRACKET ATTACHMENT TYPE	ALLOWABLE LATERAL LOAD Fp LBS	MAX BRACE RANGE q	ATR DIA. INCH	CADDY CRLM CONCRETE INSERT (ICC ESR-3864) SPECIAL INSPECTION REQ'D DIA. da INCH	MIN. SPACING Smin[2] INCH	MIN. END DIST. Cmin INCH
38A TO 38F	480	38A TO 38D	290	30°- 45°	⅜	0.61 (⅜"Ø)	6	3
38A TO 38E	390	38A TO 38C	230	46°- 60°				
50A TO 50H	770	50A TO 50F	460	30°- 45°	½	0.71 (½"Ø)	6	3
50A TO 50F	550	50A TO 50D	330	46°- 60°				

SEE DETAIL N0.00 FOR SECTION NOTES
[1] OVERSTRENGTH FACTOR AS REQUIRED FOR ANCHORAGE TO CONCRETE.
[2] AXIAL SPACING PARALLEL TO FLUTE DIRECTION.

MASON WEST
1601 E. Miraloma Ave. Placentia, CA 92870
TEL (714) 630 - 0701, www.masonwest.com

Jiefu "Jeff" Zhang, SE
California SE No. S5270

PAGE
N2.110.1

SEISMIC BRACKET ATTACHMENT
TO CONCRETE FILLED METAL DECK
WITH (2) CADDY CRLM CONCRETE INSERT AT LOWER FLUTE

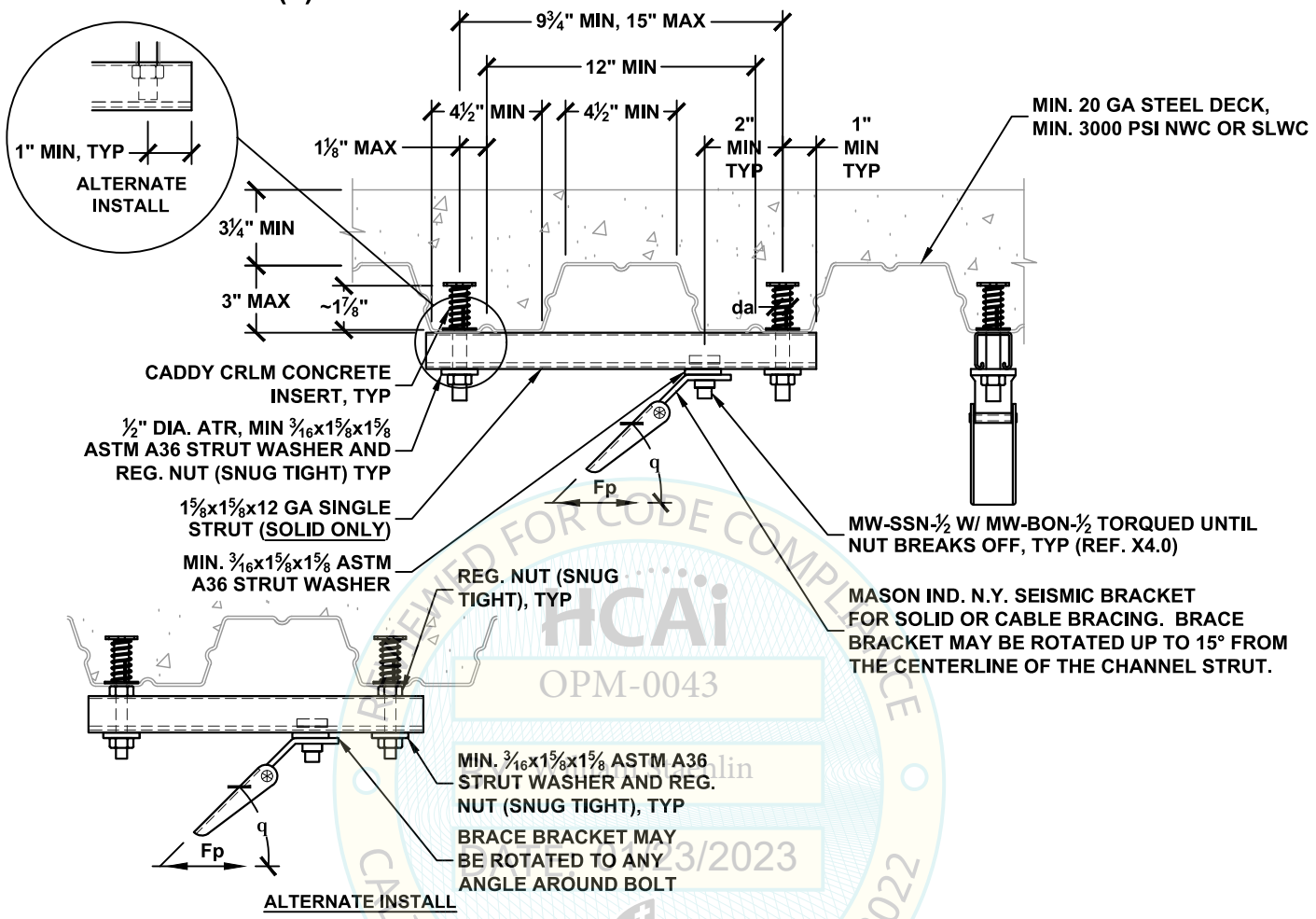

BRACE BRACKET ATTACHMENT TYPE	ALLOWABLE LATERAL LOAD Fp LBS	$\Omega_0 = 2.0$[1] BRACE BRACKET ATTACHMENT TYPE	$\Omega_0 = 2.0$[1] ALLOWABLE LATERAL LOAD Fp LBS	MAX BRACE RANGE q	CADDY CRLM CONCRETE INSERT (ICC ESR-3864) SPECIAL INSPECTION REQ'D DIA. da INCH	MIN. SPACING Smin[2] INCH	MIN. END DIST. Cmin INCH
50A TO 50G	620	50A TO 50E	390	30°- 45°	0.71 (½"Ø)	6	3
50A TO 50E	430	50A TO 50D	260	46°- 60°			

SEE DETAIL N0.00 FOR SECTION NOTES
[1] OVERSTRENGTH FACTOR AS REQUIRED FOR ANCHORAGE TO CONCRETE.
[2] AXIAL SPACING PARALLEL TO FLUTE DIRECTION.

REVIEWED FOR CODE COMPLIANCE
HCAi
OPM-0043
William Staehlin
1/23/2023
CALIFORNIA BUILDING CODE, 2022

MASON WEST
1601 E. Miraloma Ave. Placentia, CA 92870
TEL (714) 630 - 0701, www.masonwest.com

Jiefu "Jeff" Zhang, SE
California SE No. S5270

PAGE
N2.111

SEISMIC BRACKET ATTACHMENT
TO CONCRETE FILLED METAL DECK
WITH (2) CADDY CRLM CONCRETE INSERT AT LOWER FLUTE

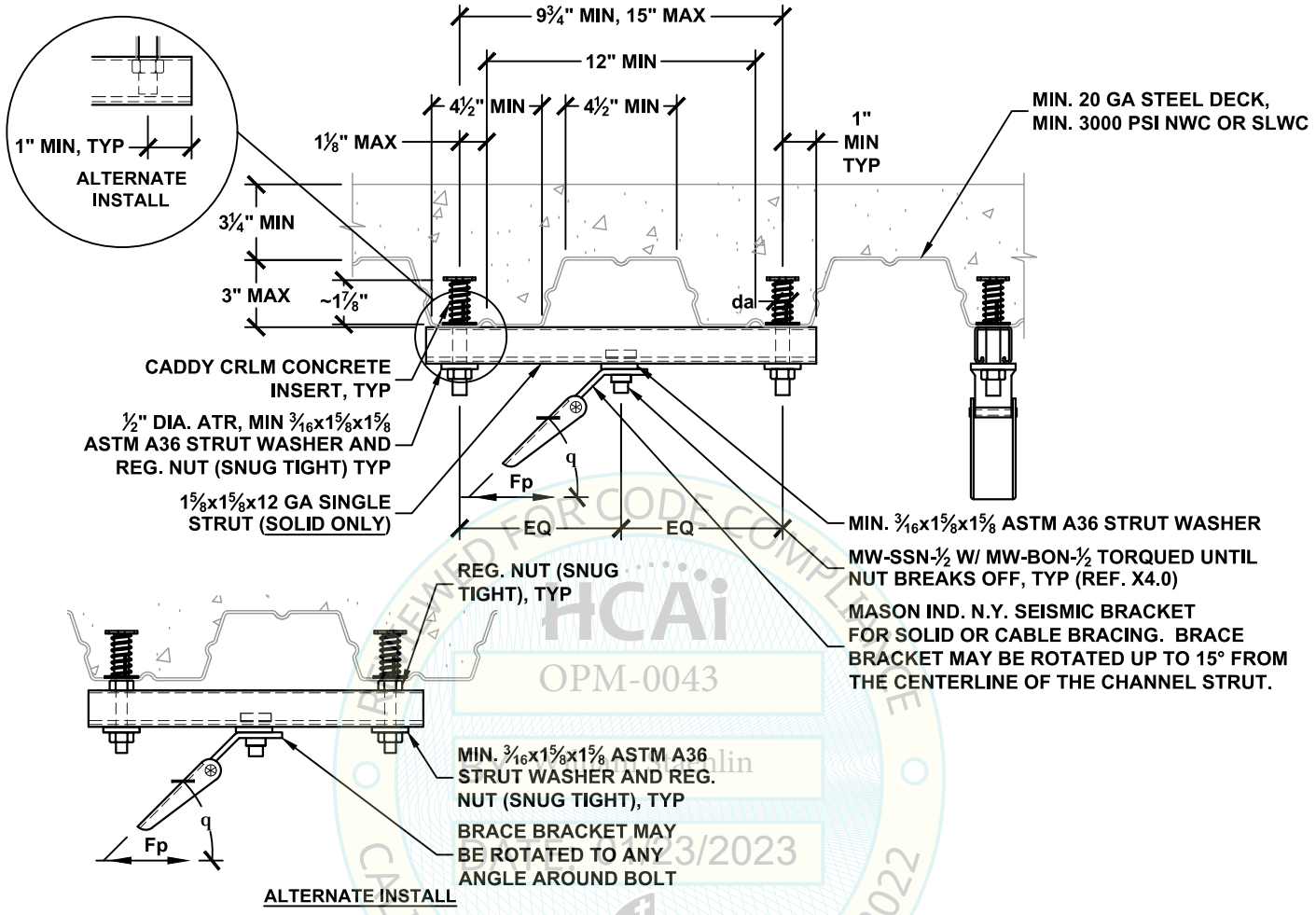

BRACE BRACKET ATTACHMENT TYPE	ALLOWABLE LATERAL LOAD Fp LBS	$\Omega_0 = 2.0$[1] BRACE BRACKET ATTACHMENT TYPE	$\Omega_0 = 2.0$[1] ALLOWABLE LATERAL LOAD Fp LBS	MAX BRACE RANGE q	CADDY CRLM CONCRETE INSERT (ICC ESR-3864) SPECIAL INSPECTION REQ'D DIA. da INCH	MIN. SPACING Smin[2] INCH	MIN. END DIST. Cmin INCH
50A TO 50G	620	50A TO 50G	620	30°- 45°	0.71 (½"Ø)	6	3
50A TO 50F	530	50A TO 50F	450	46°- 60°			

SEE DETAIL N0.00 FOR SECTION NOTES
[1] OVERSTRENGTH FACTOR AS REQUIRED FOR ANCHORAGE TO CONCRETE.
[2] AXIAL SPACING PARALLEL TO FLUTE DIRECTION.

MASON WEST
1601 E. Miraloma Ave. Placentia, CA 92870
TEL (714) 630 - 0701, www.masonwest.com

Jiefu "Jeff" Zhang, SE
California SE No. S5270

PAGE
N2.111.1

REVIEWED FOR CODE COMPLIANCE
HCAi
OPM-0043
William Staehlin
1/23/2023
CALIFORNIA BUILDING CODE, 2022

WIRE/CABLE BRACE ATTACHMENT TO CONCRETE FILLED METAL DECK WITH (1) BADGER INDUSTRIES MDH NO-DRILL™ HANGER

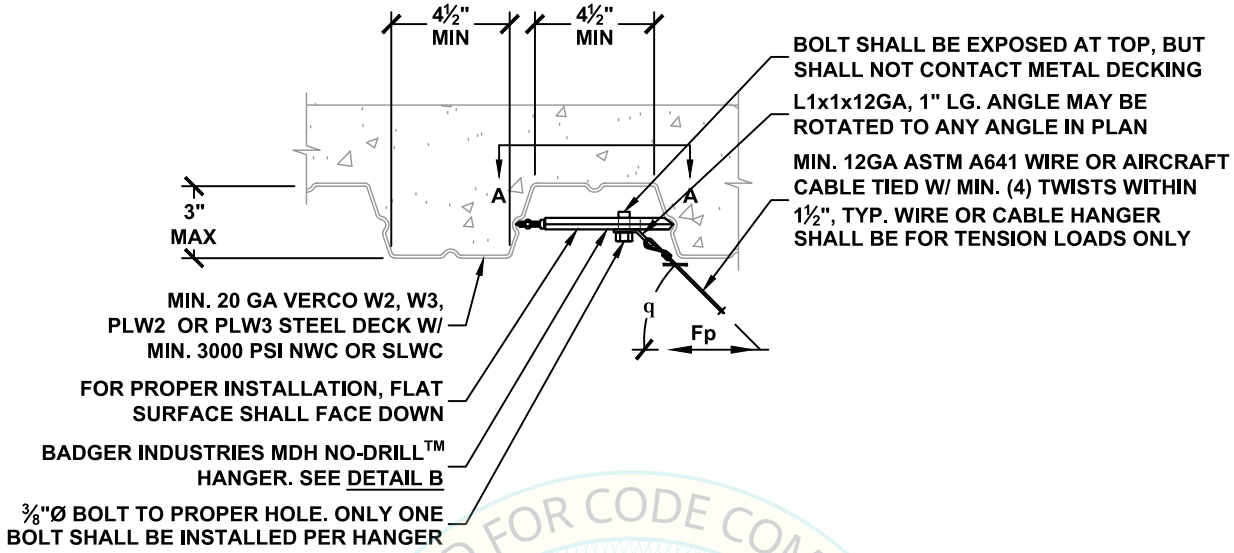

BRACE BRACKET CONNECTION TYPE	ALLOWABLE LATERAL LOAD Fp LBS	MAX BRACE RANGE q	MDH SIZE	MIN SPACING Smin INCH	MIN END DIST. Cmin INCH
38A TO 38B	130	30°- 45°	MDH3812	2	6
38A TO 38A	90	46°- 60°			

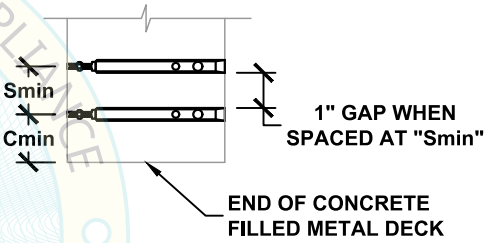

VIEW A-A

1 SEE DETAIL N0.00 FOR SECTION NOTES

2 PROXIMITY OR SPACING OF NEW OR EXISTING CONCRETE INSERTS OR DRILLED HOLE ANCHORS TO THE MDH DOES NOT IMPACT THE LISTED MDH CAPACITIES.

3 INSTALLATION: CLEAN METAL DECKING GROOVES TO EXPOSE PLATED DECKING METAL PRIOR TO PLACEMENT OF THE MDH HANGER. ACCURATELY PLACE MDH HANGER CHISEL POINT ENDS INTO METAL DECKING GROOVES WITH FLAT SURFACE FACING DOWNWARDS AND WITH THE LENGTH OF THE MDH BODY BEING PERPENDICULAR TO THE DECKING GROOVES. WHILE HOLDING THE BODY CHISEL POINT END TIGHT INTO METAL DECKING GROOVE, TIGHTEN TORQUE-OFF HEX NUT UNTIL BOTH CHISEL POINT ENDS ARE TIGHT AND SECURELY WEDGED INTO THE OPPOSING METAL DECKING GROOVES. WHILE HOLDING THE MDH HANGER BODY IN PLACE, TIGHTEN THE TORQUE-OFF HEX NUT WITH AN OPEN END WRENCH UNTIL THE HEX NUT HAS BROKEN AWAY FROM THE THREADED BARREL, LEAVING THE LOCK WASHER COMPRESSED AND THE HEX NUT LOOSE ON THE THREADED SHAFT. FOR REFERENCE, A MINIMUM OF 15 FT-LBS OF TORQUE IS REQUIRED FOR THE MDH3812.

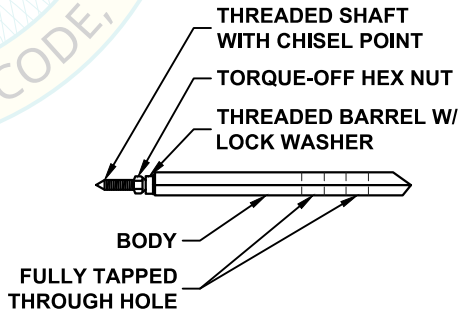

DETAIL B

HCAi
OPM-0043
BY: William Staehlin
DATE: 01/23/2023
REVIEWED FOR CODE COMPLIANCE
CBC 2022 BUILDING CODE

MASON WEST
1601 E. Miraloma Ave. Placentia, CA 92870
TEL (714) 630 - 0701, www.masonwest.com

Jiefu "Jeff" Zhang, SE
California SE No. S5270

PAGE
N2.120.1

SEISMIC BRACKET ATTACHMENT TO CONCRETE FILLED METAL DECK WITH (1) HILTI KB-TZ2 CARBON STEEL CONCRETE ANCHOR

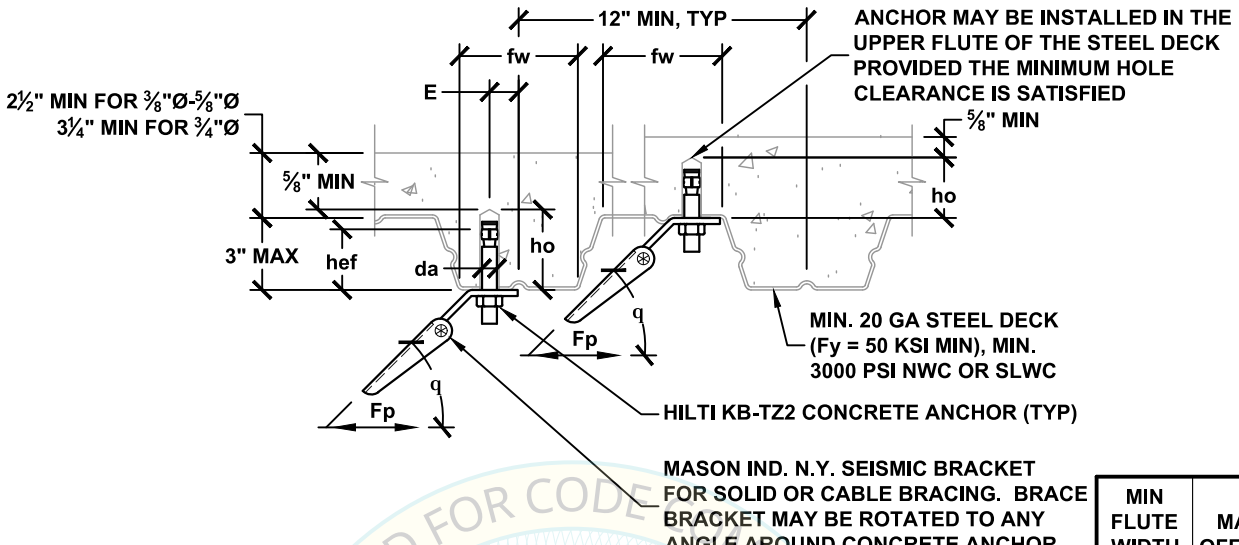

MIN FLUTE WIDTH fw INCH	MAX OFFSET E INCH
3⅞	15⁄16
4½	1

REVIEWED FOR CODE COMPLIANCE
HCAi
OPM-0043
BY: William Staehlin
DATE: 01/23/2023
REPORT BUILDING CODE 2022

BRACE BRACKET ATTACHMENT TYPE	ALLOWABLE LATERAL LOAD Fp LBS	Ω_0 = 2.0[1] BRACE BRACKET ATTACHMENT TYPE	ALLOWABLE LATERAL LOAD Fp LBS	MAX BRACE RANGE q	HILTI KB-TZ2 CONCRETE ANCHOR (ICC ESR-4266) SPECIAL INSPECTION REQ'D DIA. da INCH	MIN. EFF. EMBED. hef INCH	MIN. HOLE DEPTH ho INCH	MIN. SPACING Smin INCH	MIN. END DIST. Cmin INCH	TORQUE REQ'D FT-LBS
38A TO 38D	320	38A TO 38D	320	30°- 45°	⅜	2½	3¼	MAX OF: 3*hef OR 1.5*FLUTE WIDTH	3¾	30
38A TO 38C	200	38A TO 38C	200	46°- 60°						
50A TO 50F	450	50A TO 50F	450	30°- 45°	½	2½	3¼		3¾	50
50A TO 50D	270	50A TO 50D	270	46°- 60°						
50A TO 50F	490	50A TO 50F	490	30°- 45°	½	3¼	4¼		4⅞	50
50A TO 50D	290	50A TO 50D	290	46°- 60°						
63A TO 63F	540	63A TO 63F	540	30°- 45°	⅝	2¾	3¾		4⅛	40
63A TO 63D	330	63A TO 63D	330	46°- 60°						
63A TO 63G	620	63A TO 63G	620	30°- 45°	⅝	4	4¾		6	40
63A TO 63E	370	63A TO 63E	370	46°- 60°						
75A TO 75G	600	75A TO 75G	600	30°- 45°	¾	3¾	4¾		5⅝	110
75A TO 75D	340	75A TO 75D	340	46°- 60°						

SEE DETAIL N0.00 FOR SECTION NOTES

[1] OVERSTRENGTH FACTOR AS REQUIRED FOR ANCHORAGE TO CONCRETE.

MASON WEST
1601 E. Miraloma Ave. Placentia, CA 92870
TEL (714) 630 - 0701, www.masonwest.com

Jiefu "Jeff" Zhang, SE
California SE No. S5270

PAGE
N2.130

SEISMIC BRACKET ATTACHMENT TO CONCRETE FILLED METAL DECK WITH (2) HILTI KB-TZ2 CARBON STEEL CONCRETE ANCHORS

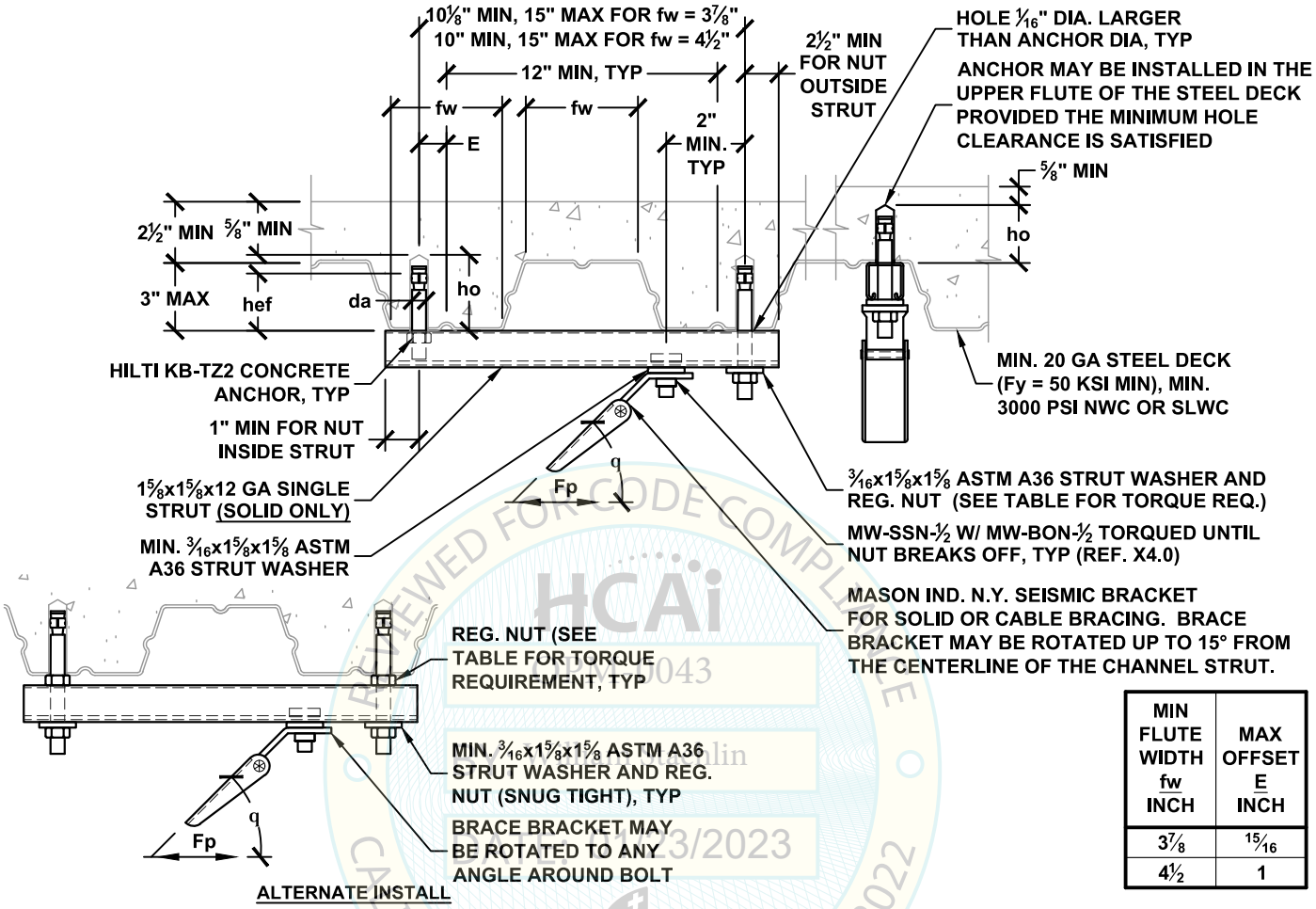

MIN FLUTE WIDTH fw INCH	MAX OFFSET E INCH
3⅞	15/16
4½	1

BRACE BRACKET ATTACHMENT TYPE	ALLOWABLE LATERAL LOAD Fp LBS	$\Omega_0 = 2.0$[1] BRACE BRACKET ATTACHMENT TYPE	ALLOWABLE LATERAL LOAD Fp LBS	MAX BRACE RANGE q	HILTI KB-TZ2 CONCRETE ANCHOR (ICC ESR-4266) SPECIAL INSPECTION REQ'D DIA. da INCH	MIN. EFF. EMBED. hef INCH	MIN. HOLE DEPTH ho INCH	MIN. SPACING Smin INCH	MIN. END DIST. Cmin INCH	TORQUE REQ'D FT-LBS
50A TO 50G	620	50A TO 50E	380	30°- 45°	⅜	2½	3¼	MAX OF: 3*hef OR 1.5*FLUTE WIDTH	3¾	30
50A TO 50F	450	50A TO 50D	270	46°- 60°						
50A TO 50G	620	50A TO 50F	570	30°- 45°	½	3¼	4¼		4⅞	50
50A TO 50F	530	50A TO 50E	400	46°- 60°						
50A TO 50G	620	50A TO 50G	620	30°- 45°	⅝	4	4¾		6	40
50A TO 50F	530	50A TO 50F	510	46°- 60°						

SEE DETAIL N0.00 FOR SECTION NOTES

[1] OVERSTRENGTH FACTOR AS REQUIRED FOR ANCHORAGE TO CONCRETE.

MASON WEST
1601 E. Miraloma Ave. Placentia, CA 92870
TEL (714) 630 - 0701, www.masonwest.com

Jiefu "Jeff" Zhang, SE
California SE No. S5270

PAGE
N2.131

REVIEWED FOR CODE COMPLIANCE
HCAi
OPM-0043
William Staehlin
1/23/2023
CALIFORNIA BUILDING CODE 2022

SEISMIC BRACKET ATTACHMENT
TO CONCRETE FILLED METAL DECK
WITH (2) HILTI KB-TZ2 CARBON STEEL CONCRETE ANCHORS

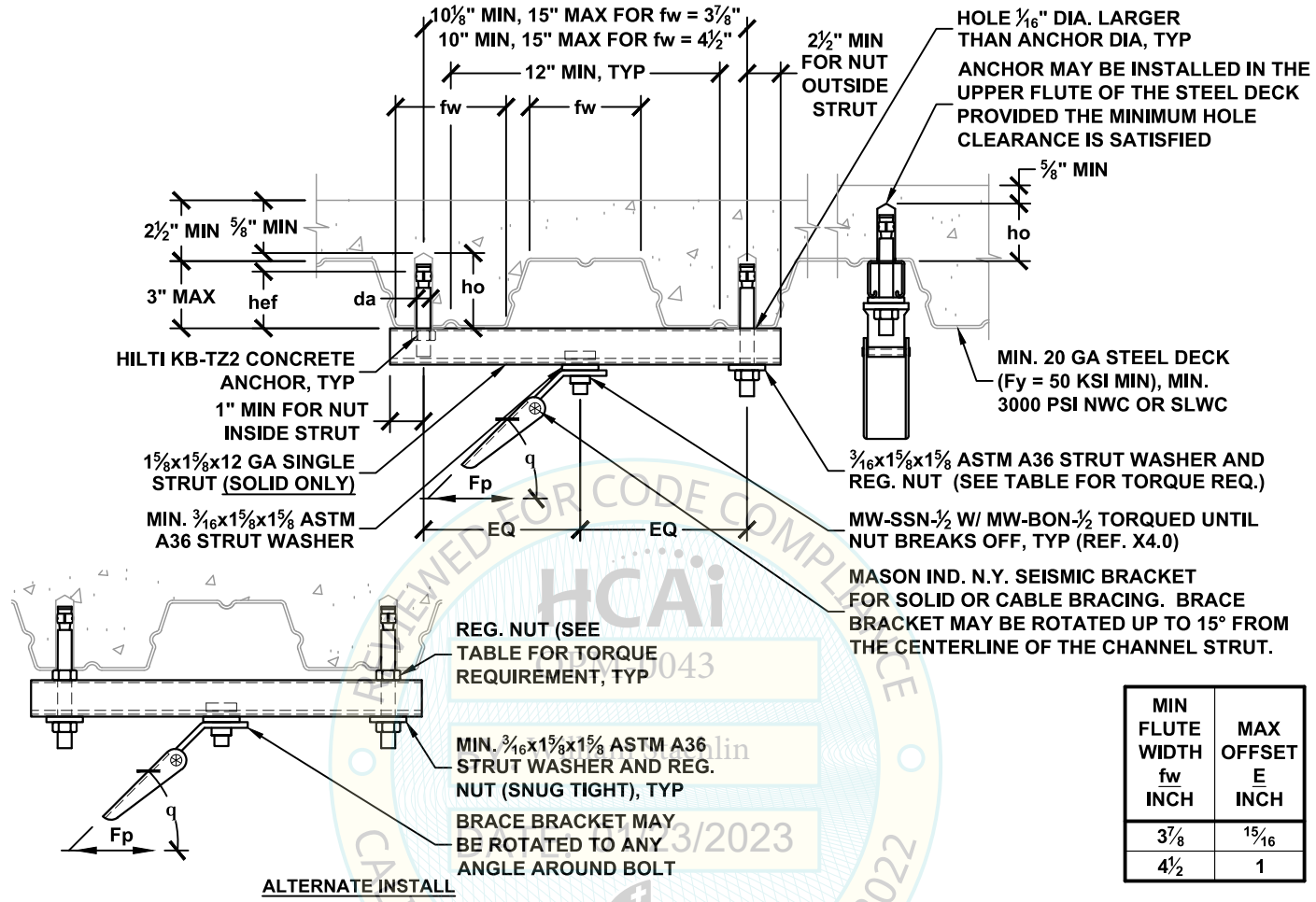

MIN FLUTE WIDTH fw INCH	MAX OFFSET E INCH
3⅞	15/16
4½	1

BRACE BRACKET ATTACHMENT TYPE	ALLOWABLE LATERAL LOAD Fp LBS	Ω_0 = 2.0[1] BRACE BRACKET ATTACHMENT TYPE	ALLOWABLE LATERAL LOAD Fp LBS	MAX BRACE RANGE q	HILTI KB-TZ2 CONCRETE ANCHOR (ICC ESR-4266) SPECIAL INSPECTION REQ'D DIA. da INCH	MIN. EFF. EMBED. hef INCH	MIN. HOLE DEPTH ho INCH	MIN. SPACING Smin INCH	MIN. END DIST. Cmin INCH	TORQUE REQ'D FT-LBS
50A TO 50G	620	50A TO 50G	620	30°- 45°	⅜	2½	3¼	MAX OF: 3*hef OR 1.5*FLUTE WIDTH	3¾	30
50A TO 50F	530	50A TO 50F	460	46°- 60°						
50A TO 50G	620	50A TO 50G	620	30°- 45°	½	3¼	4¼		4⅞	50
50A TO 50F	530	50A TO 50F	530	46°- 60°						
50A TO 50G	620	50A TO 50G	620	30°- 45°	⅝	4	4¾		6	40
50A TO 50F	530	50A TO 50F	530	46°- 60°						

SEE DETAIL N0.00 FOR SECTION NOTES

[1] OVERSTRENGTH FACTOR AS REQUIRED FOR ANCHORAGE TO CONCRETE.

MASON WEST
1601 E. Miraloma Ave. Placentia, CA 92870
TEL (714) 630 - 0701, www.masonwest.com

Jiefu "Jeff" Zhang, SE
California SE No. S5270

PAGE
N2.131.1

REVIEWED FOR CODE COMPLIANCE
HCAi
OPM-0043
William Staehlin
1/23/2023
CALIFORNIA BUILDING CODE 2022

SEISMIC BRACKET ATTACHMENT
TO CONCRETE FILLED METAL DECK
WITH (2) HILTI KB-TZ2 CARBON STEEL CONCRETE ANCHORS

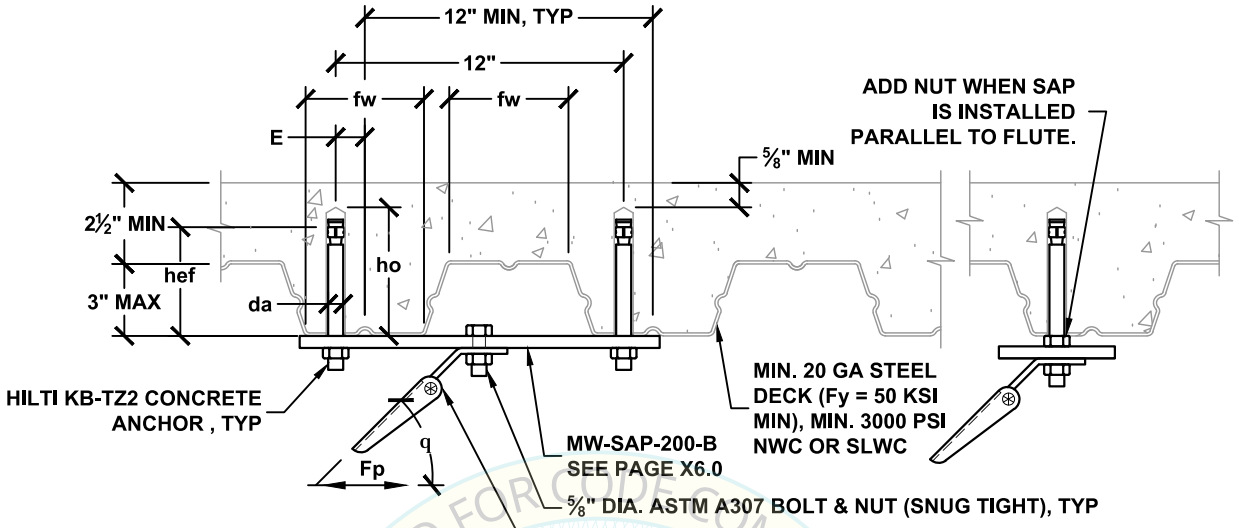

REVIEWED FOR CODE COMPLIANCE
CALIFORNIA BUILDING CODE 2022
OPM-0043
BY: William Staehlin
DATE: 01/23/2023

MIN FLUTE WIDTH fw INCH	MAX OFFSET E INCH
3⅞	15/16
4½	1

BRACE BRACKET ATTACHMENT TYPE	ALLOWABLE LATERAL LOAD Fp LBS	$\Omega_0 = 2.0^1$ BRACE BRACKET ATTACHMENT TYPE	ALLOWABLE LATERAL LOAD Fp LBS	MAX BRACE RANGE q	HILTI KB-TZ2 CONCRETE ANCHOR (ICC ESR-4266) SPECIAL INSPECTION REQ'D DIA. da INCH	MIN. EFF. EMBED. hef INCH	MIN. HOLE DEPTH ho INCH	MIN. SPACING Smin INCH	MIN. END DIST. Cmin INCH	TORQUE REQ'D FT-LBS
63A TO 63M	1820	63A TO 63K	1090	30°- 45°	5/8	2¾	3¾	MAX OF: 3*hef OR 1.5*FLUTE WIDTH	4⅛	40
63A TO 63K	1110	63A TO 63H	770	46°- 60°						
63A TO 63M	1930	63A TO 63L	1260	30°- 45°	5/8	4	4¾		6	40
63A TO 63K	1110	63A TO 63J	880	46°- 60°						

SEE DETAIL N0.00 FOR SECTION NOTES

[1] OVERSTRENGTH FACTOR AS REQUIRED FOR ANCHORAGE TO CONCRETE.

MASON WEST
1601 E. Miraloma Ave. Placentia, CA 92870
TEL (714) 630 - 0701, www.masonwest.com

Jiefu "Jeff" Zhang, SE
California SE No. S5270

PAGE
N2.132

SEISMIC BRACKET ATTACHMENT
TO CONCRETE FILLED METAL DECK
WITH (4) HILTI KB-TZ2 CARBON STEEL CONCRETE ANCHORS

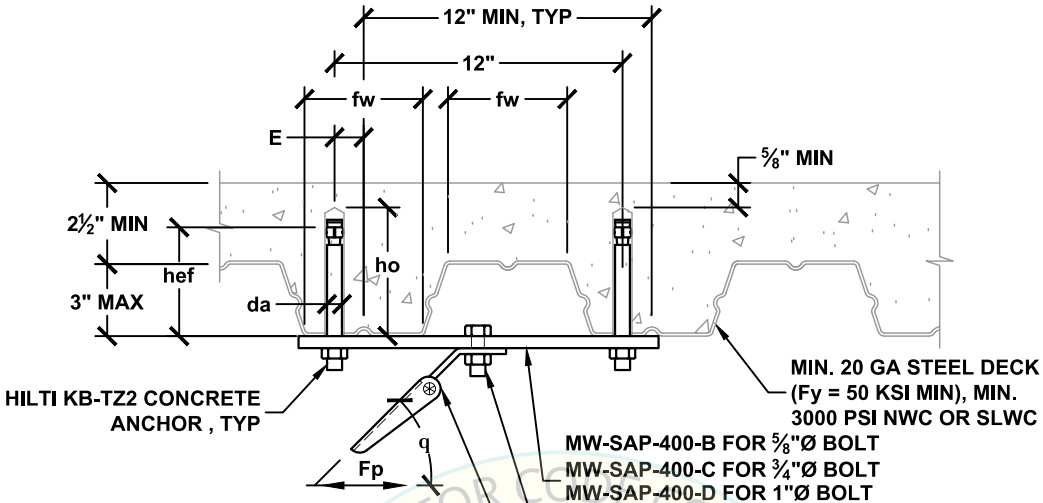

MIN FLUTE WIDTH fw INCH	MAX OFFSET E INCH
3⅞	15/16
4½	1

BRACE BRACKET ATTACHMENT TYPE	ALLOWABLE LATERAL LOAD Fp LBS	$\Omega_0 = 2.0$[1] BRACE BRACKET ATTACHMENT TYPE	ALLOWABLE LATERAL LOAD Fp LBS	MAX BRACE RANGE q	BOLT DIA. INCH	HILTI KB-TZ2 CONCRETE ANCHOR (ICC ESR-4266) SPECIAL INSPECTION REQ'D DIA. da INCH	MIN. EFF. EMBED. hef INCH	MIN. HOLE DEPTH ho INCH	MIN. SPACING Smin INCH	MIN. END DIST. Cmin INCH	TORQUE REQ'D FT-LBS
63A TO 63P	3080	63A TO 63N	2180	30°- 45°	5/8	5/8	2¾	3¾	MAX OF: 3*hef OR 1.5*FLUTE WIDTH	4⅛	40
63A TO 63N	2080	63A TO 63L	1540	46°- 60°	5/8						
63A TO 63P	3080	63A TO 63P	2530	30°- 45°	5/8	5/8	4	4¾		6	40
63A TO 63N	2080	63A TO 63M	1770	46°- 60°	5/8						
75A TO 75Q	3500	75A TO 75P	2530	30°- 45°	¾						
75A TO 75N	2020	75A TO 75M	1770	46°- 60°	¾						
100A TO 100Q	3500	100A TO 100P	2530	30°- 45°	1						
100A TO 100N	2020	100A TO 100M	1770	46°- 60°	1						

SEE DETAIL N0.00 FOR SECTION NOTES

[1] OVERSTRENGTH FACTOR AS REQUIRED FOR ANCHORAGE TO CONCRETE.

REVIEWED FOR CODE COMPLIANCE
HCAI
OPM-0043
BY: William Staehlin
DATE: 01/23/2023
CALIFORNIA BUILDING CODE 2022

MASON WEST
1601 E. Miraloma Ave. Placentia, CA 92870
TEL (714) 630 - 0701, www.masonwest.com

Jiefu "Jeff" Zhang, SE
California SE No. S5270

PAGE
N2.133

SEISMIC BRACKET ATTACHMENT
TO CONCRETE FILLED METAL DECK
WITH (1) HILTI KB-TZ2 CARBON STEEL CONCRETE ANCHOR

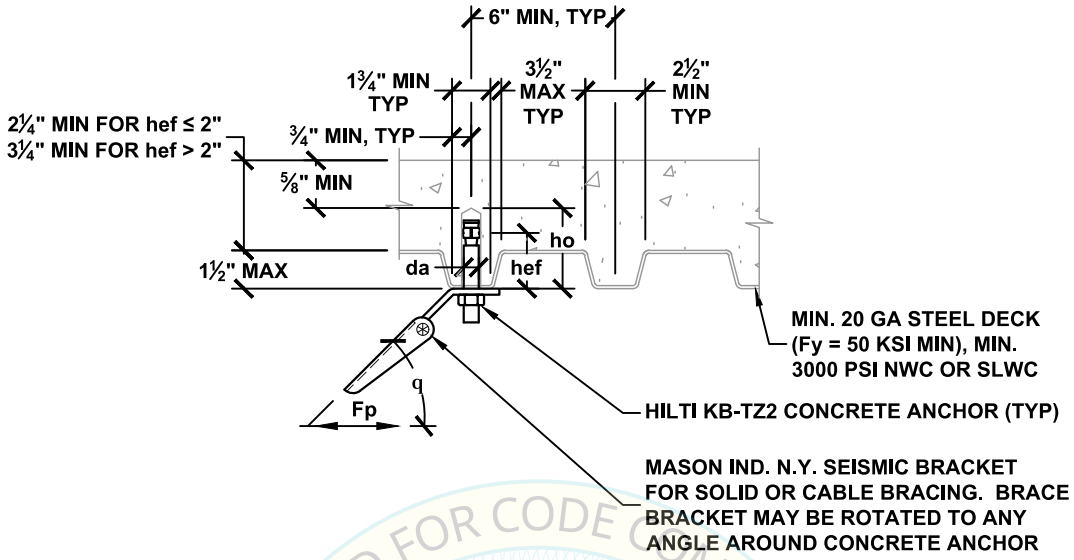

REVIEWED FOR CODE COMPLIANCE
HCAi
OPM-0043
BY: William Staehlin
DATE: 01/23/2023
CALIFORNIA BUILDING CODE 2022

BRACE BRACKET ATTACHMENT TYPE	ALLOWABLE LATERAL LOAD Fp LBS	$\Omega_0 = 2.0$[1] BRACE BRACKET ATTACHMENT TYPE	ALLOWABLE LATERAL LOAD Fp LBS	MAX BRACE RANGE q	HILTI KB-TZ2 CONCRETE ANCHOR (ICC ESR-4266) SPECIAL INSPECTION REQ'D DIA. da INCH	MIN. EFF. EMBED. hef INCH	MIN. HOLE DEPTH ho INCH	MIN. SPACING Smin INCH	MIN. END DIST. Cmin INCH	TORQUE REQ'D FT-LBS
38A TO 38D	310	38A TO 38D	310	30°- 45°	⅜	2	2¾	6	3	30
38A TO 38C	180	38A TO 38C	180	46°- 60°						
50A TO 50C	240	50A TO 50C	240	30°- 45°	½	2	2¾	6	3	50
50A TO 50B	140	50A TO 50B	140	46°- 60°						
50A TO 50D	300	50A TO 50D	300	30°- 45°	½	3¼	4¼	9¾	4⅞	50
50A TO 50B	170	50A TO 50B	170	46°- 60°						
63A TO 63E	400	63A TO 63E	400	30°- 45°	⅝	2¾	3¾	8¼	4⅛	40
63A TO 63C	230	63A TO 63C	230	46°- 60°						

SEE DETAIL N0.00 FOR SECTION NOTES

[1] OVERSTRENGTH FACTOR AS REQUIRED FOR ANCHORAGE TO CONCRETE.

MASON WEST
1601 E. Miraloma Ave. Placentia, CA 92870
TEL (714) 630 - 0701, www.masonwest.com

Jiefu "Jeff" Zhang, SE
California SE No. S5270

PAGE
N2.134

SEISMIC BRACKET ATTACHMENT
TO CONCRETE FILLED METAL DECK
WITH (2) HILTI KB-TZ2 CARBON STEEL CONCRETE ANCHORS

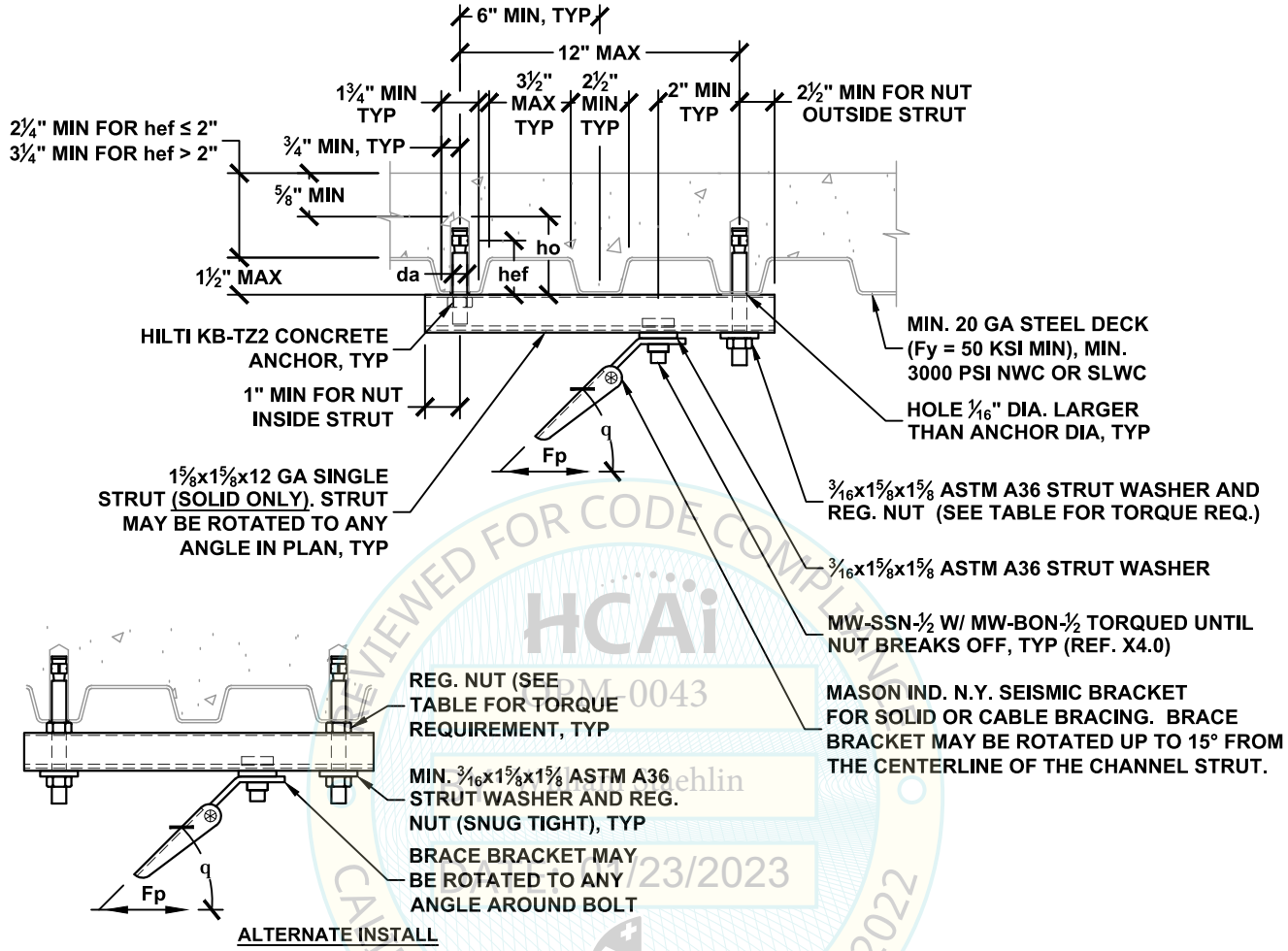

ALTERNATE INSTALL

BRACE BRACKET ATTACHMENT TYPE	ALLOWABLE LATERAL LOAD Fp LBS	$\Omega_0 = 2.0^1$ BRACE BRACKET ATTACHMENT TYPE	ALLOWABLE LATERAL LOAD Fp LBS	MAX BRACE RANGE q	HILTI KB-TZ2 CONCRETE ANCHOR (ICC ESR-4266) SPECIAL INSPECTION REQ'D DIA. da INCH	MIN. EFF. EMBED. hef INCH	MIN. HOLE DEPTH ho INCH	MIN. SPACING Smin INCH	MIN. END DIST. Cmin INCH	TORQUE REQ'D FT-LBS
50A TO 50G	610	50A TO 50E	370	30°- 45°	⅜	2	2⅝	6	3	30
50A TO 50E	430	50A TO 50D	260	46°- 60°						
50A TO 50G	620	50A TO 50F	480	30°- 45°	⅝	2¾	3¾	8¼	4⅛	40
50A TO 50F	530	50A TO 50D	330	46°- 60°						

SEE DETAIL N0.00 FOR SECTION NOTES

[1] OVERSTRENGTH FACTOR AS REQUIRED FOR ANCHORAGE TO CONCRETE.

MASON WEST
1601 E. Miraloma Ave. Placentia, CA 92870
TEL (714) 630 - 0701, www.masonwest.com

Jiefu "Jeff" Zhang, SE
California SE No. S5270

PAGE
N2.135

REVIEWED FOR CODE COMPLIANCE
HCAi
OPM-0043
William Staehlin
1/23/2023
CALIFORNIA BUILDING CODE 2022

SEISMIC BRACKET ATTACHMENT TO CONCRETE FILLED METAL DECK WITH (2) HILTI KB-TZ2 CARBON STEEL CONCRETE ANCHORS

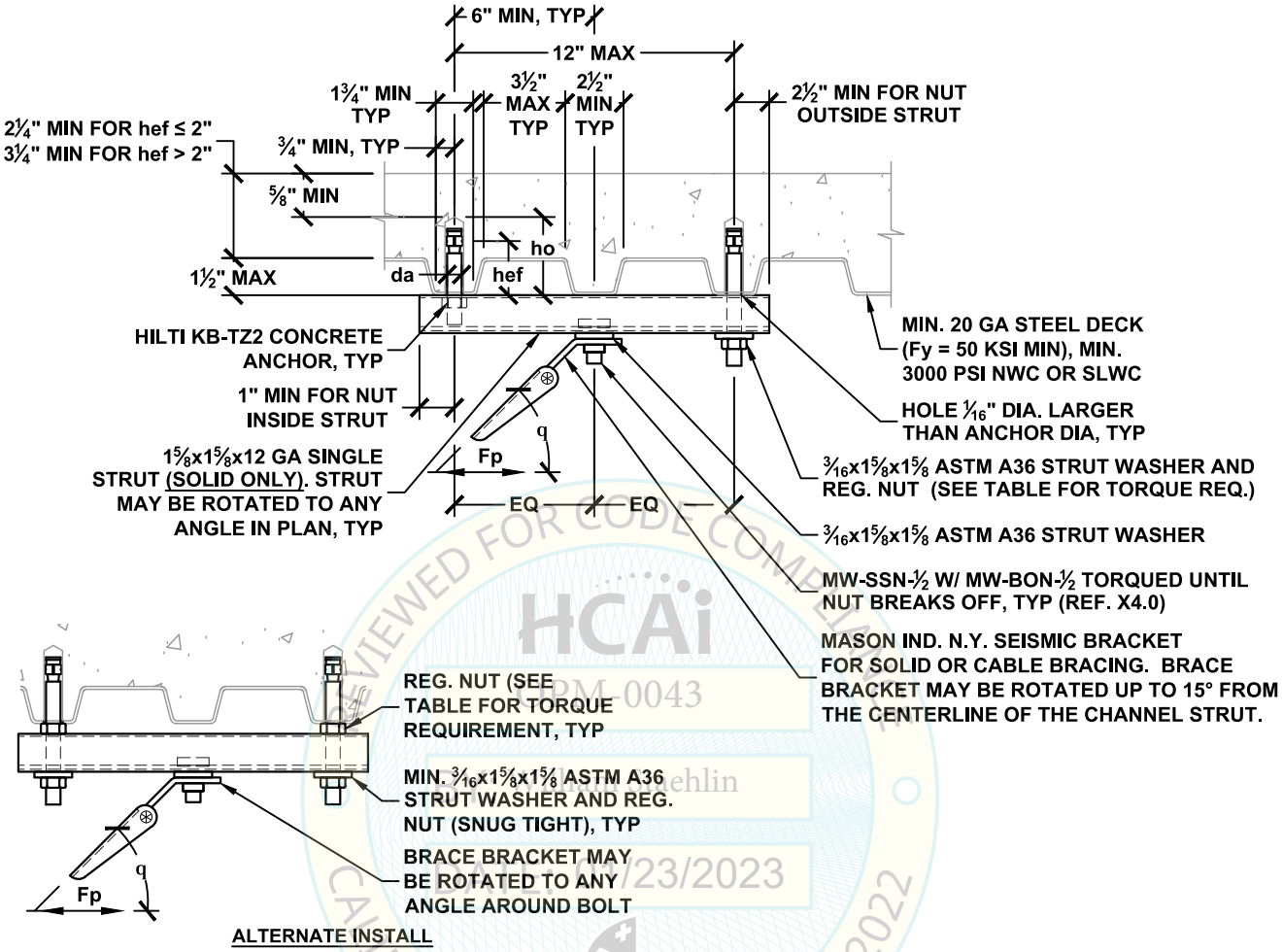

ALTERNATE INSTALL

BRACE BRACKET ATTACHMENT TYPE	ALLOWABLE LATERAL LOAD Fp LBS	$\Omega_0 = 2.0^1$ BRACE BRACKET ATTACHMENT TYPE	ALLOWABLE LATERAL LOAD Fp LBS	MAX BRACE RANGE q	HILTI KB-TZ2 CONCRETE ANCHOR (ICC ESR-4266) SPECIAL INSPECTION REQ'D DIA. da INCH	MIN. EFF. EMBED. hef INCH	MIN. HOLE DEPTH ho INCH	MIN. SPACING Smin INCH	MIN. END DIST. Cmin INCH	TORQUE REQ'D FT-LBS
50A TO 50G	620	50A TO 50G	620	30°- 45°	⅜	2	2⅝	6	3	30
50A TO 50F	530	50A TO 50E	440	46°- 60°						
50A TO 50G	620	50A TO 50G	620	30°- 45°	⅝	2¾	3¾	8¼	4⅛	40
50A TO 50F	530	50A TO 50F	530	46°- 60°						

SEE DETAIL N0.00 FOR SECTION NOTES

[1] OVERSTRENGTH FACTOR AS REQUIRED FOR ANCHORAGE TO CONCRETE.

MASON WEST
1601 E. Miraloma Ave. Placentia, CA 92870
TEL (714) 630 - 0701, www.masonwest.com

Jiefu "Jeff" Zhang, SE
California SE No. S5270

PAGE
N2.135.1

HCAi OPM-0043 Reviewed by William Staehlin 1/23/2023 CALIFORNIA BUILDING CODE 2022

SEISMIC BRACKET ATTACHMENT TO STEEL BEAM OR OPEN WEB STEEL TRUSS WITH SELF-DRILLING FASTENERS OR WELDING

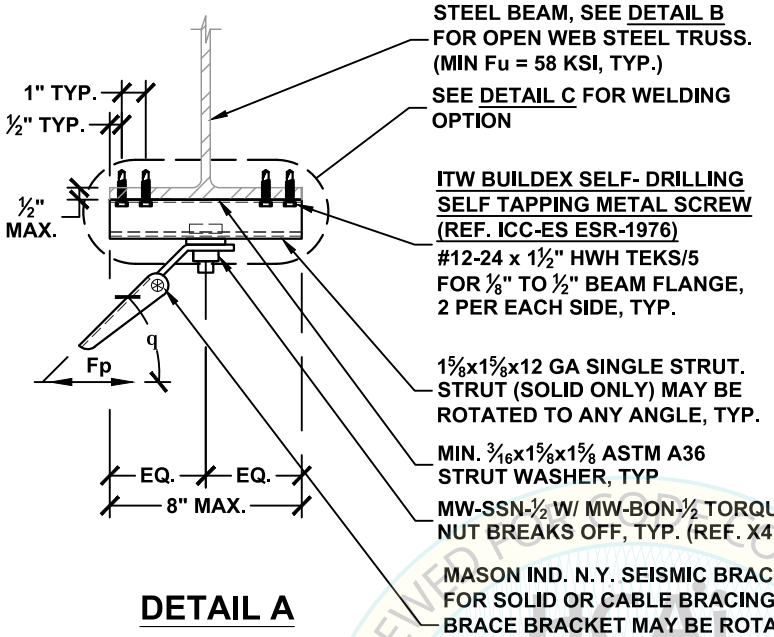

DETAIL A

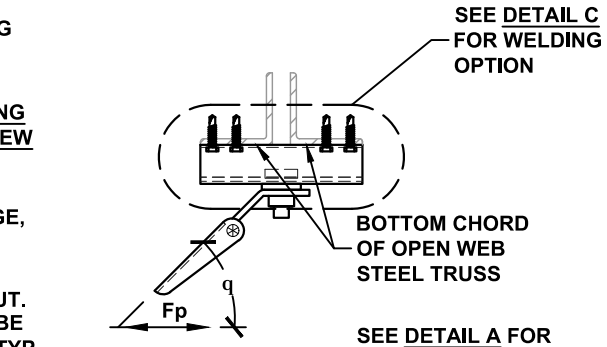

DETAIL B

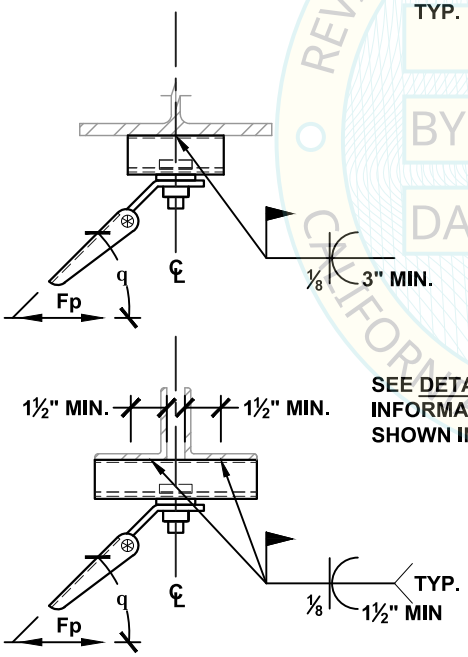

DETAIL C
WELDING OPTION

NOTE: ALL WELDS TO BE MINIMUM 70xx ELECTRODE WELDS

BRACE BRACKET ATTACHMENT TYPE	ALLOWABLE LATERAL LOAD Fp LBS	MAX BRACE RANGE q
50A TO 50G	590	30°- 45°
50A TO 50F	480	46°- 60°

1 SEE DETAIL N0.00 FOR SECTION NOTES
2 ATTACHMENT TO STEEL BEAM SHALL NOT BE PLACED WITHIN THE PROTECTED ZONE AS DEFINED IN AISC 341.

REVIEWED FOR CODE COMPLIANCE
OPM-0043
BY: William Staehlin
DATE: 01/23/2023
CALIFORNIA BUILDING CODE, 2022

MASON WEST
1601 E. Miraloma Ave. Placentia, CA 92870
TEL (714) 630 - 0701, www.masonwest.com

Jiefu "Jeff" Zhang, SE
California SE No. S5270

PAGE
N3.11

SEISMIC BRACKET ATTACHMENT
TO STEEL BEAM OR OPEN WEB STEEL TRUSS STRUCTURE
WITH SELF-DRILLING FASTENERS

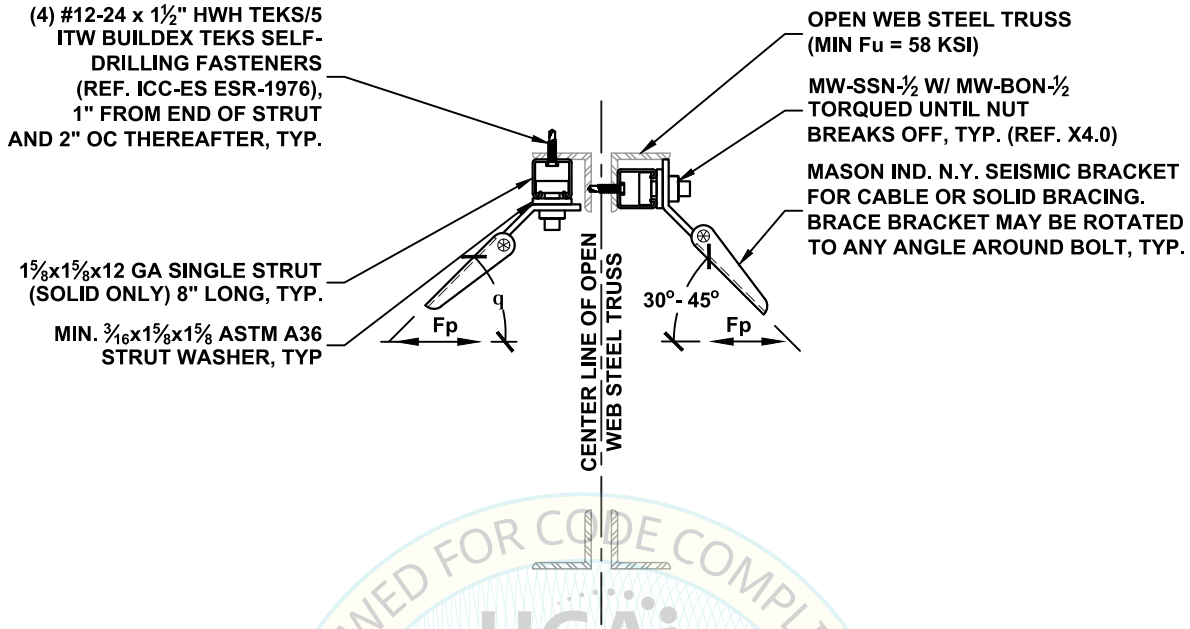

DETAIL A

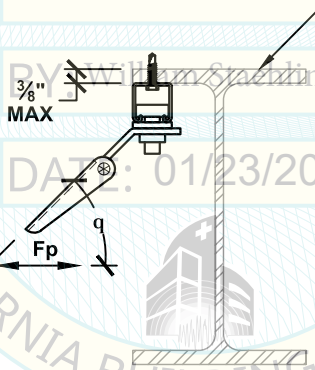

DETAIL B

BRACE BRACKET ATTACHMENT TYPE	ALLOWABLE LATERAL LOAD Fp LBS	MAX BRACE RANGE q	BOLT DIA. INCH
50A TO 50G	590	30°- 45°	½
50A TO 50F	480	46°- 60°	½

1 SEE DETAIL N0.00 FOR SECTION NOTES
2 ATTACHMENT TO STEEL BEAM SHALL NOT BE PLACED WITHIN THE PROTECTED ZONE AS DEFINED IN AISC 341.

REVIEWED FOR CODE COMPLIANCE
HCAi
OPM-0043
BY: William Staehlin
DATE: 01/23/2023
CALIFORNIA BUILDING CODE, 2022

MASON WEST
1601 E. Miraloma Ave. Placentia, CA 92870
TEL (714) 630 - 0701, www.masonwest.com

Jiefu "Jeff" Zhang, SE
California SE No. S5270

PAGE
N3.12

SEISMIC BRACKET WELDED ATTACHMENT TO A STRUCTURAL STEEL BEAM

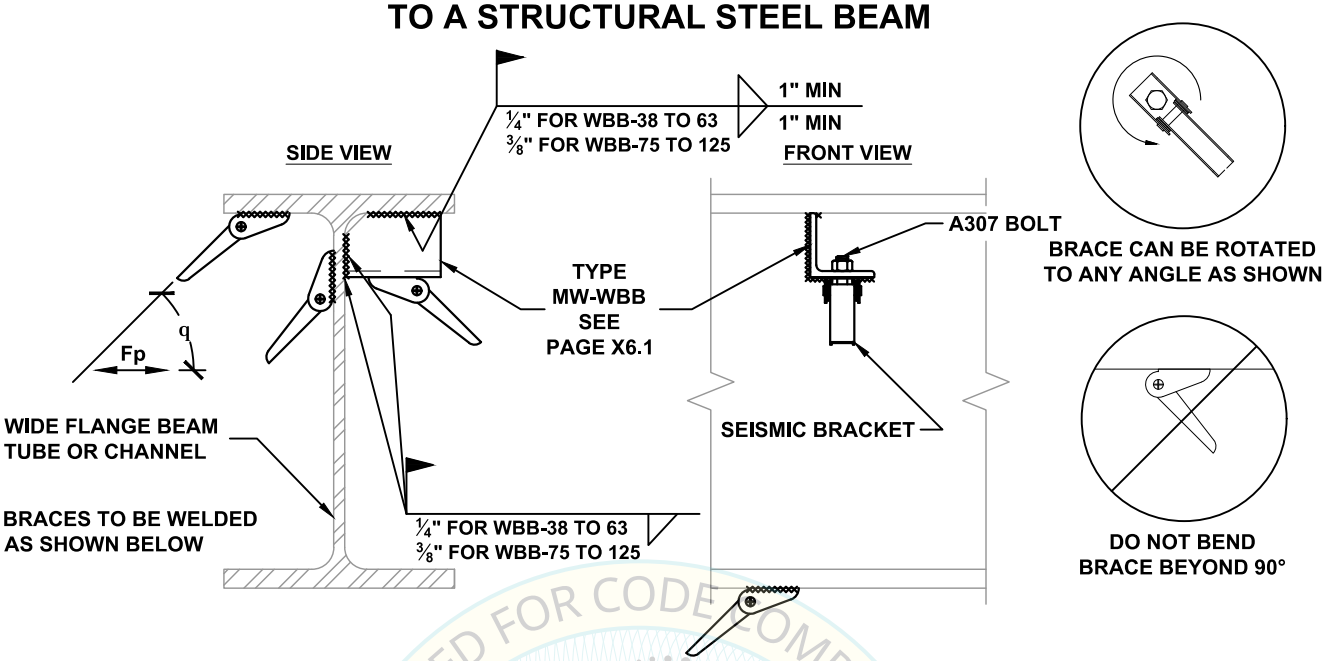

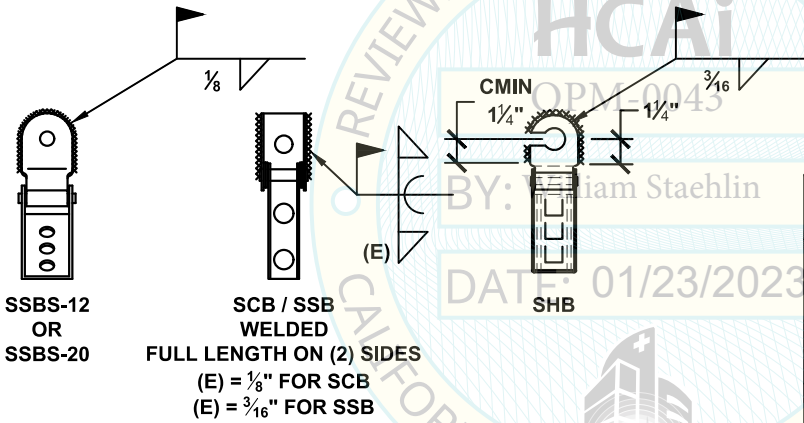

NOTE: ALL WELDS TO BE MINIMUM 70xx ELECTRODE WELDS

REVIEWED FOR CODE COMPLIANCE
HCAi
OPM-0043
BY: William Staehlin
DATE: 01/23/2023
CALIFORNIA BUILDING CODE

FOR SSB BRACKETS [1,2]				
ALLOWABLE LATERAL LOAD, Fp LBS		ALLOWABLE LATERAL LOAD, Fp LBS		
BRACE BRACKET ATTACHMENT TYPE	WELD TO STEEL	BRACE BRACKET ATTACHMENT TYPE	WITH MW-WBB	MAX BRACE RANGE q
75A TO 75Q	4440	75A TO 75Q	3800	30°- 45°
75A TO 75P	3360	75A TO 75N	2190	46°- 60°
100A TO 100R	6410	100A TO 100Q	3800	30°- 45°
100A TO 100Q	4280	100A TO 100N	2190	46°- 60°
125A TO 125R	6410	125A TO 125Q	3800	30°- 45°
125A TO 125Q	4280	125A TO 125N	2190	46°- 60°

FOR SSBS, SCB, & SHB BRACKETS WITH OR WITHOUT MW-WBB		
BRACE BRACKET ATTACHMENT TYPE	ALLOWABLE LATERAL LOAD Fp LBS	MAX BRACE RANGE q
38A TO 38K	1120	30°- 45°
38A TO 38J	890	46°- 60°
50A TO 50N	2000	30°- 45°
50A TO 50L	1240	46°- 60°
63A TO 63N	2150	30°- 45°
63A TO 63M	1240	46°- 60°
75A TO 75N	2320	30°- 45°
75A TO 75M	1700	46°- 60°

1 SEE DETAIL N0.00 FOR SECTION NOTES
2 WELDED ATTACHMENT TO STEEL BEAM SHALL NOT BE PLACED WITHIN THE PROTECTED ZONE AS DEFINED IN AISC 341.

MASON WEST
1601 E. Miraloma Ave. Placentia, CA 92870
TEL (714) 630 - 0701, www.masonwest.com

Jiefu "Jeff" Zhang, SE
California SE No. S5270

PAGE
N3.13

THIS PAGE INTENTIONALLY LEFT BLANK.

MASON WEST
1601 E. Miraloma Ave. Placentia, CA 92870
TEL (714) 630 - 0701, www.masonwest.com



Jiefu "Jeff" Zhang, SE
California SE No. S5270

PAGE
N3.14

SEISMIC BRACKET ATTACHMENT TO STEEL BEAM WITH STEEL BEAM CLAMPS

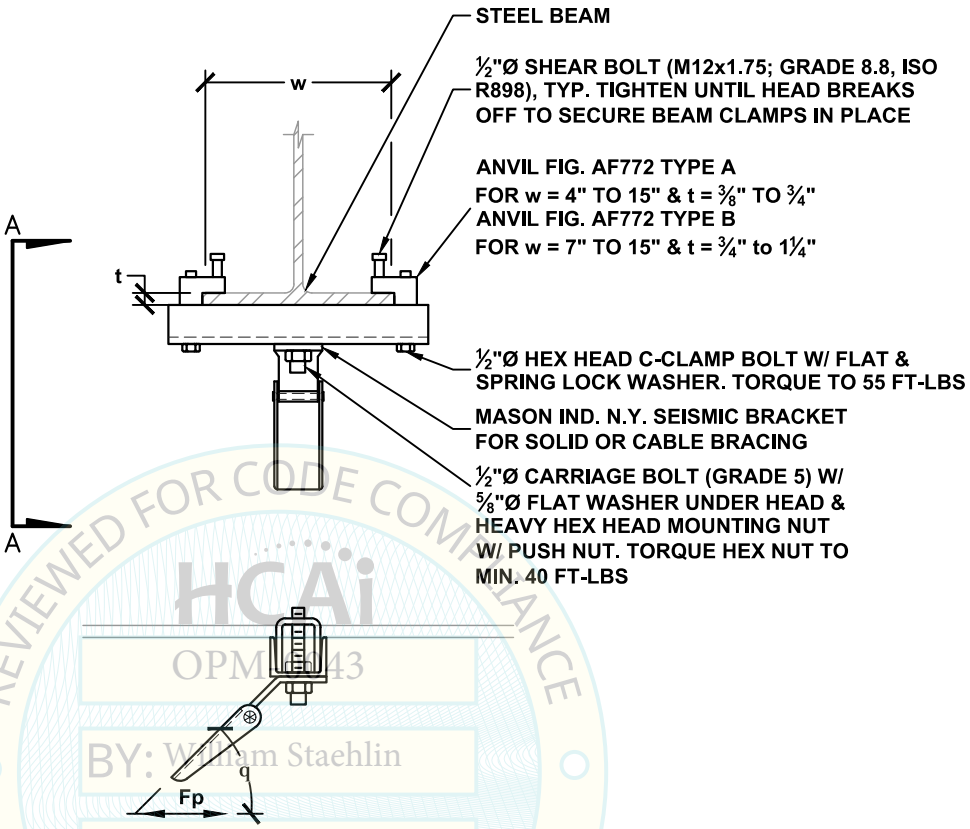

SECTION A-A

REVIEWED FOR CODE COMPLIANCE
HCAi
OPM-0043
BY: William Staehlin
DATE: 01/23/2023
CALIFORNIA BUILDING CODE, 2022

BRACE BRACKET CONNECTION TYPE	ALLOWABLE LATERAL LOAD Fp LBS	MAX BRACE RANGE q	CLAMP MODEL
50A TO 50F	480	30°- 45°	ANVIL FIG. AF772
50A TO 50D	330	46°- 60°	

1 SEE DETAIL N0.00 FOR SECTION NOTES
2 ATTACHMENT TO STEEL BEAM SHALL NOT BE PLACED WITHIN THE PROTECTED ZONE AS DEFINED IN AISC 341.
3 BRACE BRACKET TO BE INSTALLED PARALLEL TO BEAM ONLY, AND SHALL NOT BE INSTALLED PERPENDICULAR TO BEAM UNLESS APPROVED BY SEOR.

MASON WEST
1601 E. Miraloma Ave. Placentia, CA 92870
TEL (714) 630 - 0701, www.masonwest.com

Jiefu "Jeff" Zhang, SE
California SE No. S5270

PAGE
N3.15

SEISMIC BRACKET ATTACHMENT TO OPEN WEB STEEL TRUSS WITH STEEL BEAM CLAMPS

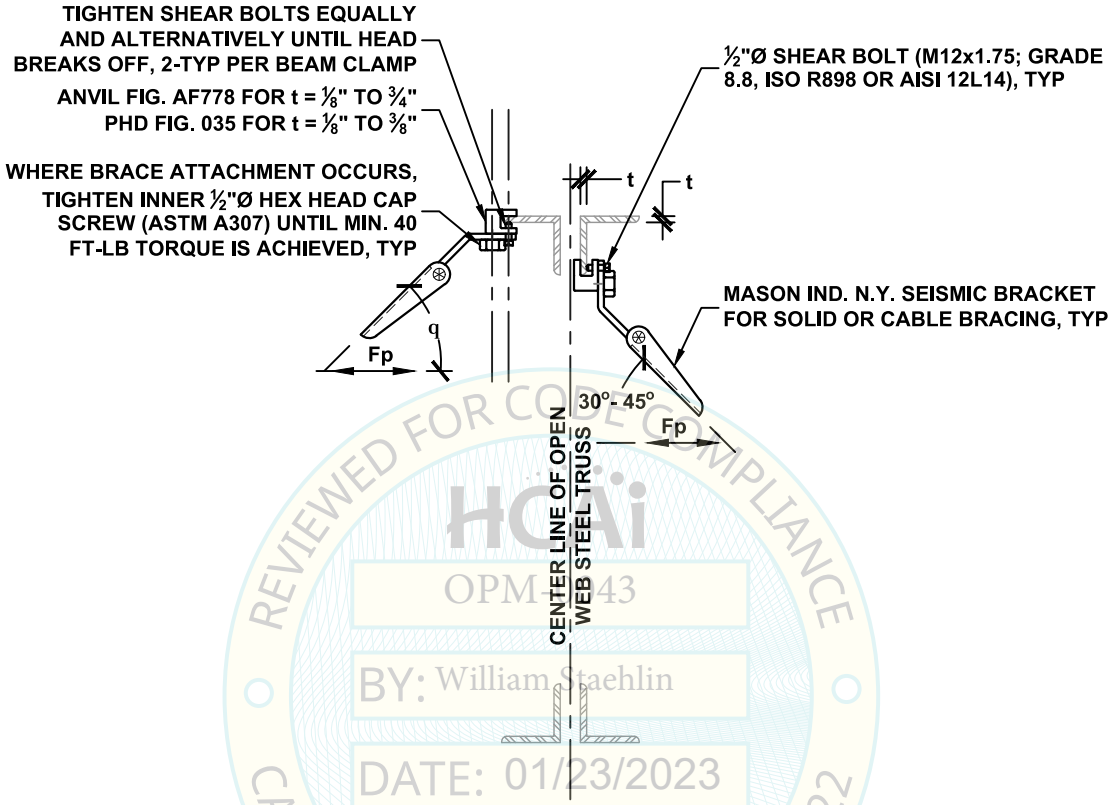

REVIEWED FOR CODE COMPLIANCE
HCAi
OPM-0043
BY: William Staehlin
DATE: 01/23/2023
CALIFORNIA BUILDING CODE, 2022

PERPENDICULAR TO BEAM		PARALLEL TO BEAM			
BRACE BRACKET CONNECTION TYPE	ALLOWABLE LATERAL LOAD Fp LBS	BRACE BRACKET CONNECTION TYPE	ALLOWABLE LATERAL LOAD Fp LBS	MAX BRACE RANGE q	CLAMP MODEL
50A TO 50L	1490	50A TO 50L	1370	30°- 45°	ANVIL FIG. AF778 PHD FIG. 035
50A TO 50K	1030	50A TO 50J	870	46°- 60°	

1 SEE DETAIL N0.00 FOR SECTION NOTES
2 ATTACHMENT TO STEEL BEAM SHALL NOT BE PLACED WITHIN THE PROTECTED ZONE AS DEFINED IN AISC 341.
3 STEEL MEMBER MUST FULLY ENGAGE THROAT OF BEAM CLAMP.
4 ATTACHMENT TO STEEL MEMBER SHALL BE WITHIN 6" OF CHORD PANEL POINT.

MASON WEST
1601 E. Miraloma Ave. Placentia, CA 92870
TEL (714) 630 - 0701, www.masonwest.com

Jiefu "Jeff" Zhang, SE
California SE No. S5270

PAGE
N3.16

SEISMIC BRACKET ATTACHMENT
TO CONCRETE FILLED METAL DECK
WITH (1) BADGER INDUSTRIES NDH4S-W3 NO-DRILL™ HANGER

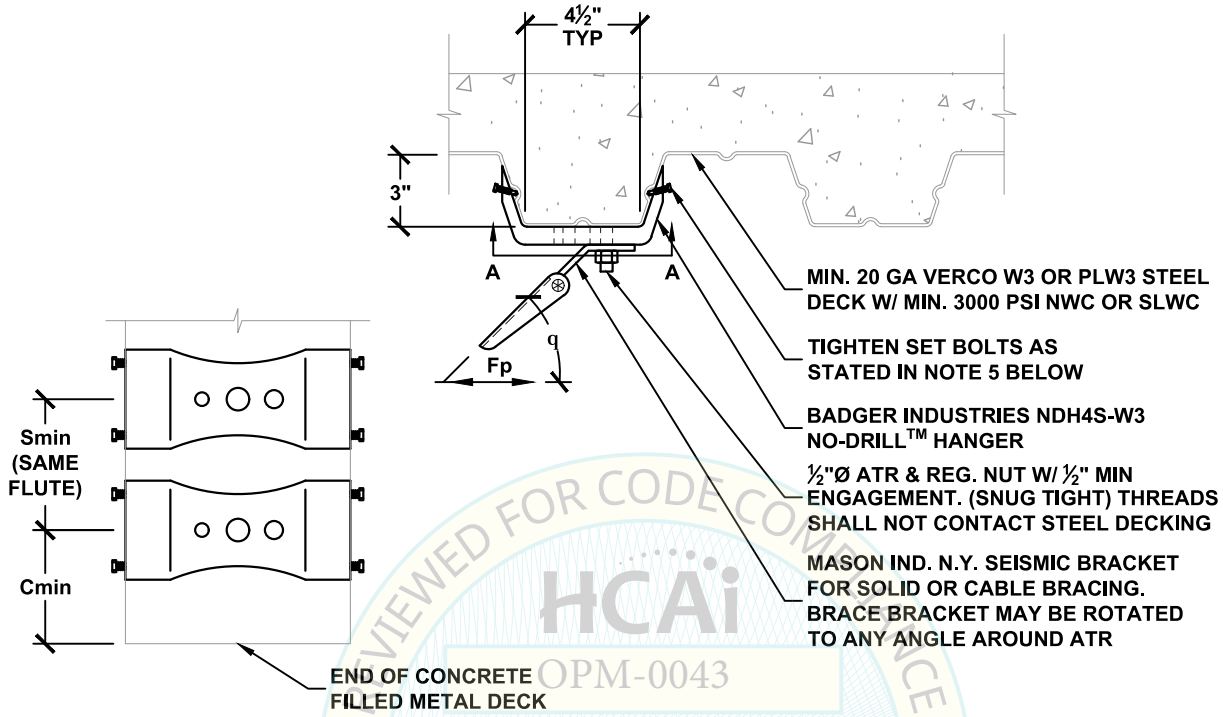

VIEW A-A:
INSTALLATION OF MULTIPLE INDEPENDENT SUPPORTS

BRACE BRACKET CONNECTION TYPE	ALLOWABLE LATERAL LOAD Fp LBS	$\Omega_0 = 2.0^2$ BRACE BRACKET CONNECTION TYPE	$\Omega_0 = 2.0^2$ ALLOWABLE LATERAL LOAD Fp LBS	MAX BRACE RANGE q	MIN SPACING Smin INCH	MIN END DIST. Cmin INCH
50A TO 50J	910	50A TO 50F	550	30°- 45°	24	12
50A TO 50J	910	50A TO 50F	550	46°- 60°		

1 SEE DETAIL N0.00 FOR SECTION NOTES
2 OVERSTRENGTH FACTOR AS REQUIRED FOR ANCHORAGE TO CONCRETE
3 PROXIMITY OR SPACING OF NEW OR EXISTING CONCRETE INSERTS OR DRILLED HOLE ANCHORS TO THE NDH DOES NOT IMPACT THE LISTED NDH CAPACITIES.
4 FOR NDH HANGERS WITH SPACING LESS THAN Smin, THE COMBINED DEMAND OF MULTIPLE NDH HANGERS SHALL NOT EXCEED THE CAPACITY OF A SINGLE NDH HANGER.
5 INSTALLATION: ALIGN THE LENGTH OF THE NDH4S-W3 TO BE PERPENDICULAR TO THE LENGTH OF THE STEEL DECKING GROOVES. WHILE HOLDING THE NDH4S-W3 IN PLACE, HAND TIGHTEN EACH OF THE (4) SET BOLTS EQUALLY AND ALTERNATIVELY MAKING SURE THAT THE POINTED END OF EACH SET BOLT IS ENGAGED INTO THE STEEL DECKING GROOVE. ONCE EACH OF THE (4) SET BOLTS ARE HAND TIGHT AND PROPER PLACEMENT OF THE NDH4S-W3 HAS BEEN CHECKED, CONTINUE TIGHTENING (USING A BOX END WRENCH) EACH OF THE (4) SET BOLTS EQUALLY AND ALTERNATIVELY UNTIL THE HEX HEAD OF EACH SET BOLT BREAKS AWAY. PROPER INSTALLATION REQUIRES THE HEX HEADS OF ALL SET BOLTS TO HAVE BROKEN AWAY. FOR REFERENCE, A MINIMUM OF 10 FT-LBS OF TORQUE IS REQUIRED.

REVIEWED FOR CODE COMPLIANCE HCAi OPM-0043 BY: William Staehlin DATE: 01/23/2023 CALIFORNIA BUILDING CODE 2022

MASON WEST
1601 E. Miraloma Ave. Placentia, CA 92870
TEL (714) 630 - 0701, www.masonwest.com

Jiefu "Jeff" Zhang, SE
California SE No. S5270

PAGE
N3.30

SEISMIC BRACKET ATTACHMENT TO CONCRETE FILLED METAL DECK WITH (2) BADGER INDUSTRIES NDH4S-W3 NO-DRILL™ HANGER

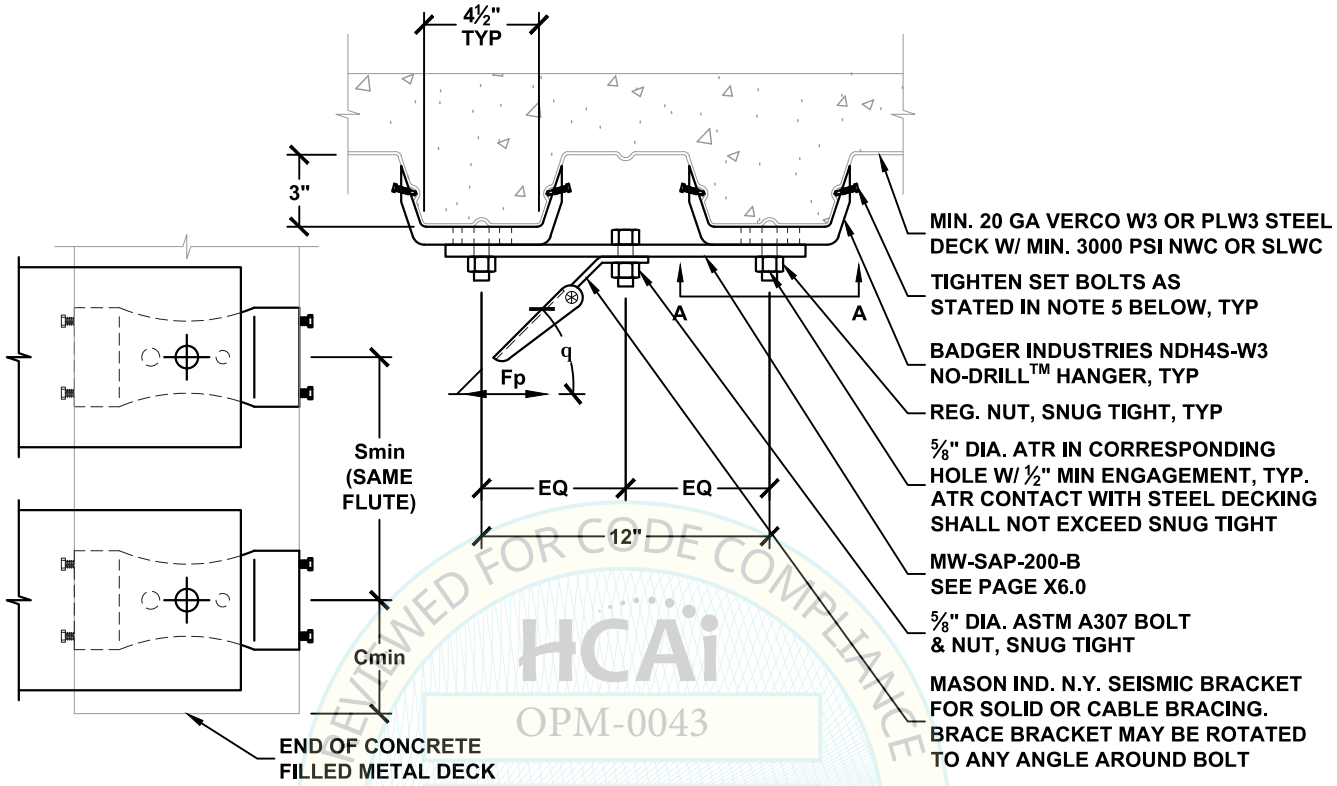

VIEW A-A:
INSTALLATION OF MULTIPLE INDEPENDENT SUPPORTS

BRACE BRACKET CONNECTION TYPE	ALLOWABLE LATERAL LOAD Fp LBS	$\Omega_0 = 2.0^2$ BRACE BRACKET CONNECTION TYPE	$\Omega_0 = 2.0^2$ ALLOWABLE LATERAL LOAD Fp LBS	MAX BRACE RANGE q	MIN SPACING Smin INCH	MIN END DIST. Cmin INCH
63A TO 63M	1830	63A TO 63K	1100	30°- 45°	24	12
63A TO 63K	1110	63A TO 63K	1100	46°- 60°		

1 SEE DETAIL N0.00 FOR SECTION NOTES
2 OVERSTRENGTH FACTOR AS REQUIRED FOR ANCHORAGE TO CONCRETE
3 PROXIMITY OR SPACING OF NEW OR EXISTING CONCRETE INSERTS OR DRILLED HOLE ANCHORS TO THE NDH DOES NOT IMPACT THE LISTED NDH CAPACITIES.
4 FOR NDH HANGERS WITH SPACING LESS THAN Smin, THE COMBINED DEMAND OF MULTIPLE NDH HANGERS SHALL NOT EXCEED THE CAPACITY OF A SINGLE NDH HANGER.
5 INSTALLATION: ALIGN THE LENGTH OF THE NDH4S-W3 TO BE PERPENDICULAR TO THE LENGTH OF THE STEEL DECKING GROOVES. WHILE HOLDING THE NDH4S-W3 IN PLACE, HAND TIGHTEN EACH OF THE (4) SET BOLTS EQUALLY AND ALTERNATIVELY MAKING SURE THAT THE POINTED END OF EACH SET BOLT IS ENGAGED INTO THE STEEL DECKING GROOVE. ONCE EACH OF THE (4) SET BOLTS ARE HAND TIGHT AND PROPER PLACEMENT OF THE NDH4S-W3 HAS BEEN CHECKED, CONTINUE TIGHTENING (USING A BOX END WRENCH) EACH OF THE (4) SET BOLTS EQUALLY AND ALTERNATIVELY UNTIL THE HEX HEAD OF EACH SET BOLT BREAKS AWAY. PROPER INSTALLATION REQUIRES THE HEX HEADS OF ALL SET BOLTS TO HAVE BROKEN AWAY. FOR REFERENCE, A MINIMUM OF 10 FT-LBS OF TORQUE IS REQUIRED.

REVIEWED FOR CODE COMPLIANCE
HCAi
OPM-0043
BY: William Staehlin
DATE: 01/23/2023
CALIFORNIA BUILDING CODE 2022

MASON WEST
1601 E. Miraloma Ave. Placentia, CA 92870
TEL (714) 630 - 0701, www.masonwest.com

Jiefu "Jeff" Zhang, SE
California SE No. S5270

PAGE
N3.31

SEISMIC BRACKET ATTACHMENT TO STRUCTURAL TIMBER WITH (1) THRU BOLT OR THREADED ROD

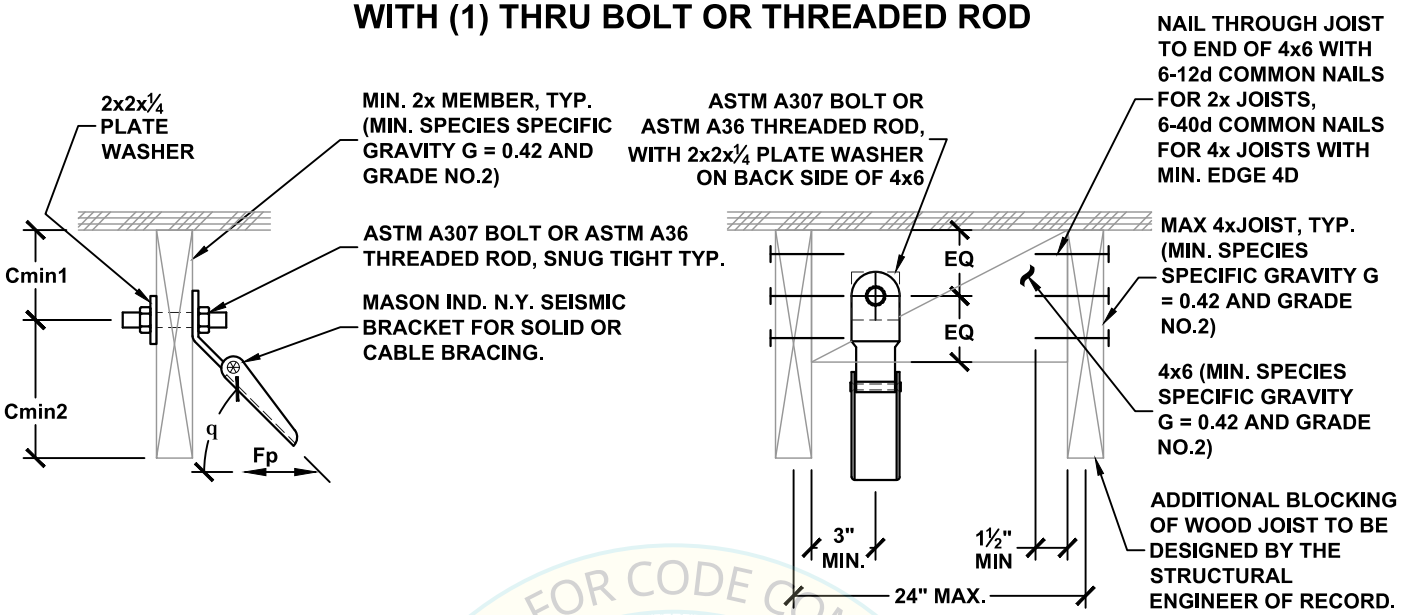

SEISMIC BRACE BRACKET PERPENDICULAR TO JOIST

SEISMIC BRACE BRACKET PARALLEL TO JOIST

REVIEWED FOR CODE COMPLIANCE
HCAi
OPM-0043
BY: William Staehlin
DATE: 01/23/2023
CALIFORNIA BUILDING CODE 2022

BRACE BRACKET ATTACHMENT TYPE	ALLOWABLE LATERAL LOAD Fp LBS	MAX BRACE RANGE q	ASTM A307 BOLTS OR ASTM A36 THREADED ROD		
			DIA. da INCH	MIN. EDGE	
				Cmin1 INCH	Cmin2 INCH
38A TO 38D	250	30°- 45°	⅜	1⅜	1½
38A TO 38B	150	46°- 60°			
50A TO 50D	300	30°- 45°	½	1⅜	2
50A TO 50B	170	46°- 60°			
63A TO 63D	340	30°- 45°	⅝	1⅜	2½
63A TO 63C	200	46°- 60°			

SEE DETAIL N0.00 FOR SECTION NOTES

MASON WEST
1601 E. Miraloma Ave. Placentia, CA 92870
TEL (714) 630 - 0701, www.masonwest.com

Jiefu "Jeff" Zhang, SE
California SE No. S5270

PAGE
N4.10

SEISMIC BRACKET ATTACHMENT
TO WOOD I-JOISTS
WITH (1) THRU BOLT OR THREADED ROD

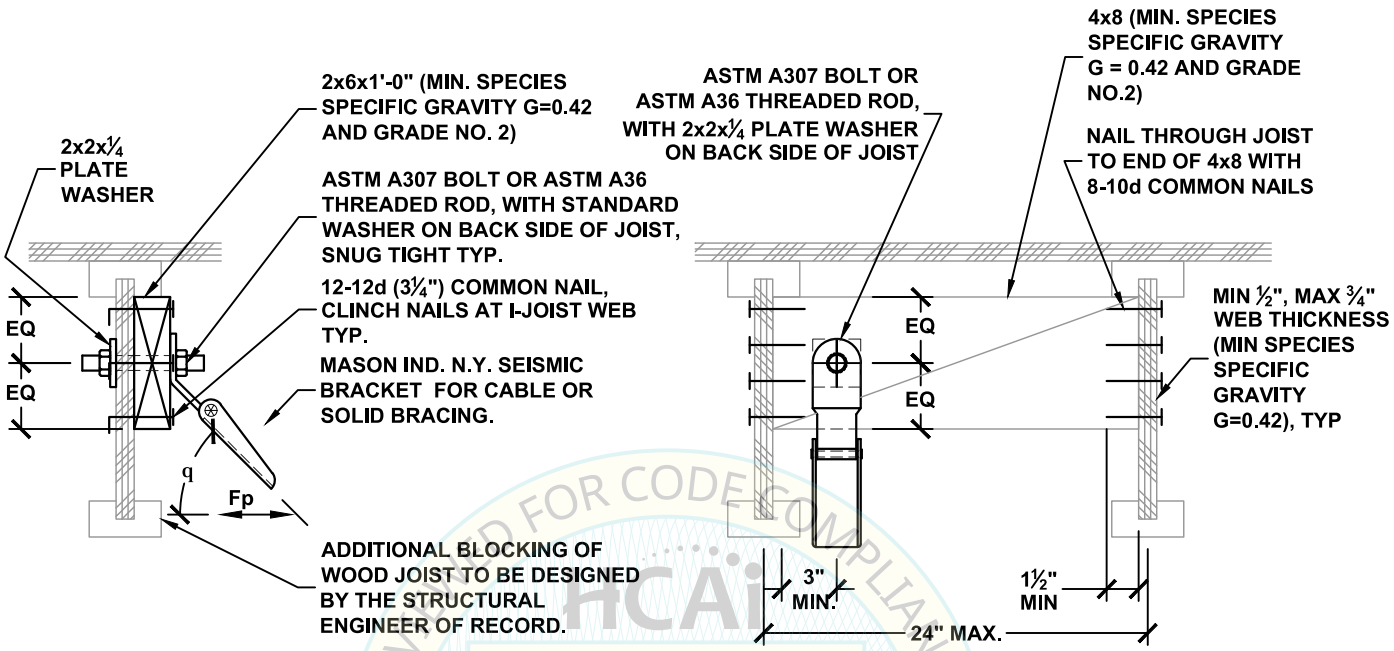

PERPENDICULAR TO JOIST **PARALLEL TO JOIST**

HCAi
OPM-0043
BY: William Staehlin
DATE: 01/23/2023
REVIEWED FOR CODE COMPLIANCE
CALIFORNIA BUILDING CODE, 2022

BRACE BRACKET ATTACHMENT TYPE	ALLOWABLE LATERAL LOAD Fp LBS	MAX BRACE RANGE q	DIA. da INCH
38A TO 38B	150	30°- 45°	⅜
38A TO 38A	80	46°- 60°	
50A TO 50C	180	30°- 45°	½
50A TO 50A	100	46°- 60°	
63A TO 63C	210	30°- 45°	⅝
63A TO 63A	120	46°- 60°	

SEE DETAIL N0.00 FOR SECTION NOTES

MASON WEST
1601 E. Miraloma Ave. Placentia, CA 92870
TEL (714) 630 - 0701, www.masonwest.com

Jiefu "Jeff" Zhang, SE
California SE No. S5270

PAGE
N4.11

SEISMIC BRACKET ATTACHMENT TO WOOD I-JOISTS

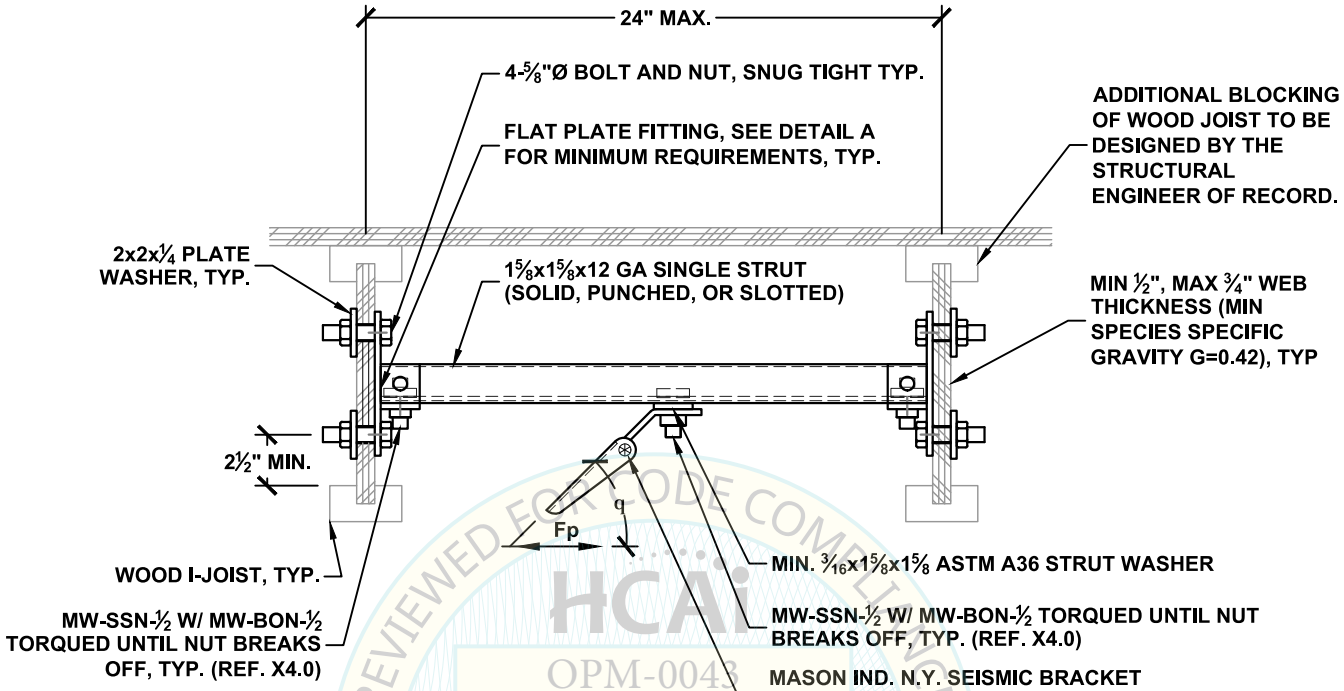

REVIEWED FOR CODE COMPLIANCE
HCAi
OPM-0043
BY: William Staehlin
DATE: 01/23/2023
CALIFORNIA BUILDING CODE 2022

BRACE BRACKET ATTACHMENT TYPE	ALLOWABLE LATERAL LOAD Fp LBS	MAX BRACE RANGE q
50A TO 50E	400	30°- 45°
50A TO 50E	350	46°- 60°

SEE DETAIL N0.00 FOR SECTION NOTES

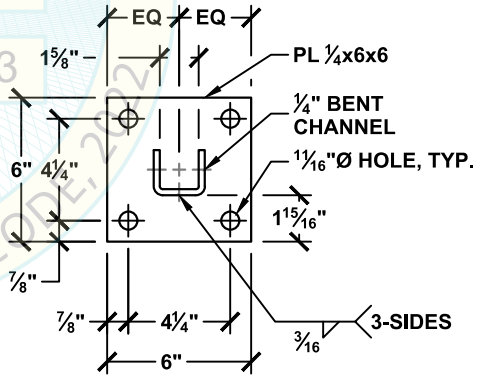

STEEL PLATE AND SHAPE TO BE ASTM A36

DETAIL A

MASON WEST
1601 E. Miraloma Ave. Placentia, CA 92870
TEL (714) 630 - 0701, www.masonwest.com

Jiefu "Jeff" Zhang, SE
California SE No. S5270

PAGE
N4.12

SEISMIC BRACKET ATTACHMENT TO WOOD JOIST

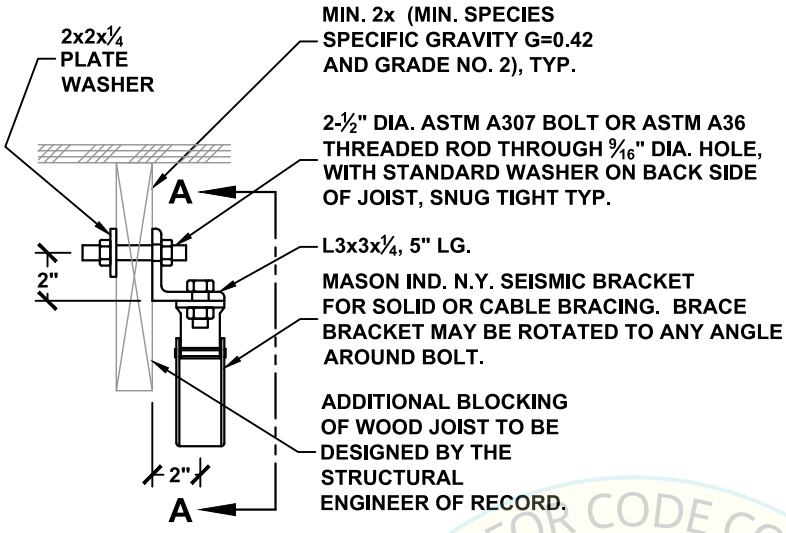

AT JOIST

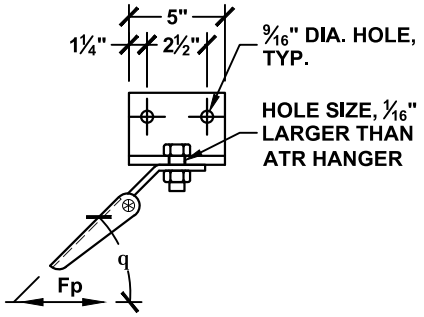

VIEW A-A

BRACE BRACKET ATTACHMENT TYPE	ALLOWABLE LATERAL LOAD Fp LBS	MAX BRACE RANGE q	DIA. da INCH
38A TO 38E	420	30°- 45°	⅜
38A TO 38D	300	46°- 60°	
50A TO 50E	420	30°- 45°	½
50A TO 50D	300	46°- 60°	
63A TO 63E	420	30°- 45°	⅝
63A TO 63D	300	46°- 60°	

SEE DETAIL N0.00 FOR SECTION NOTES

REVIEWED FOR CODE COMPLIANCE
HCAi
OPM-0043
BY: William Staehlin
DATE: 01/23/2023
CALIFORNIA BUILDING STANDARDS 2022

MASON WEST
1601 E. Miraloma Ave. Placentia, CA 92870
TEL (714) 630 - 0701, www.masonwest.com

Jiefu "Jeff" Zhang, SE
California SE No. S5270

PAGE
N4.13

SEISMIC BRACKET ATTACHMENT
TO CMU WALL
WITH HILTI KB-TZ2 CARBON STEEL CONCRETE ANCHOR

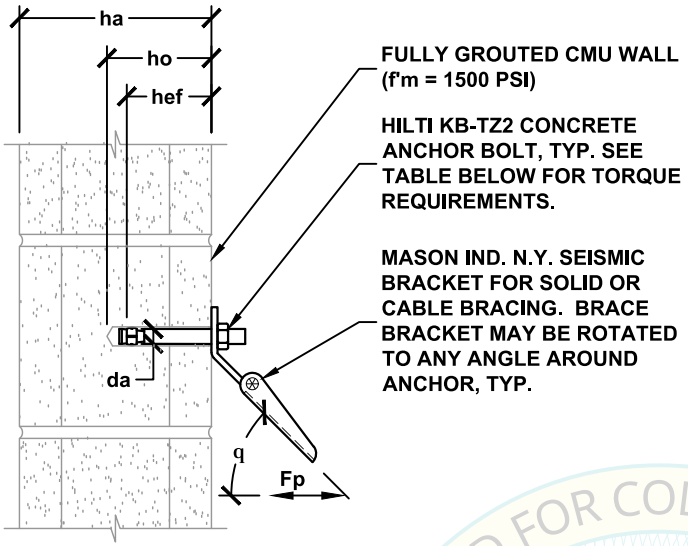

DETAIL FOR UNCRACKED CONDITIONS

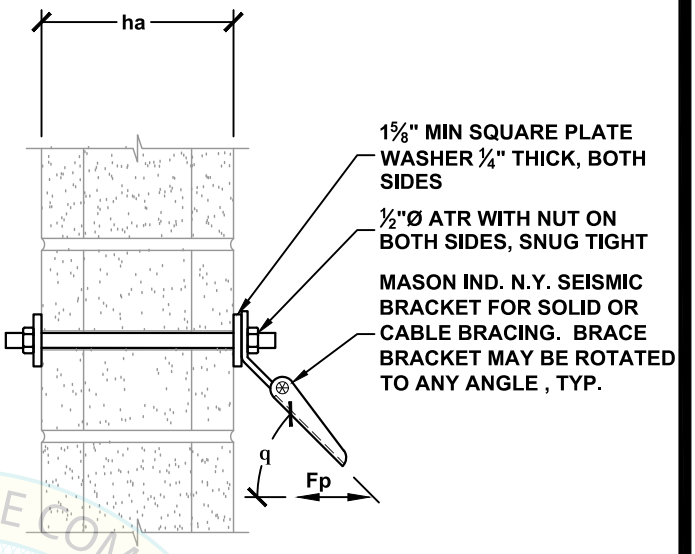

DETAIL FOR CRACKED CONDITIONS

HCAI
OPM-0043
BY: William Staehlin
DATE: 01/23/2023
REVIEWED FOR CODE COMPLIANCE
CALIFORNIA BUILDING CODES

NOTE:

WHEN USING HILTI KB-TZ2 CONCRETE ANCHOR ATTACHMENT TO CMU WALL, SEOR SHALL VERIFY:

(1) MASONRY IS NOT CRACKED AS DEFINED IN ICC-ES AC01 SECTION 2.3; CALCULATION REQUIRED TO SHOW MASONRY WALL WOULD NOT CRACK UNDER THE DESIGN EARTHQUAKE LOADS UNDER ALL SERVICE LOAD CONDITIONS; WALL HAS TO REMAIN ELASTIC.

(2) MASONRY WALL SHALL BE FULLY GROUTED IN ACCORDANCE WITH ESR-4561 SECTION 3.2.

(3) CONDITION OF USE REQUIREMENTS IN ACCORDANCE WITH ESR-4561 SECTION 5.0 IS SATISFIED.

BRACE BRACKET ATTACHMENT TYPE	ALLOWABLE LATERAL LOAD Fp LBS	$\Omega_0 = 2.0^3$ BRACE BRACKET ATTACHMENT TYPE	$\Omega_0 = 2.0^3$ ALLOWABLE LATERAL LOAD Fp LBS	MAX BRACE RANGE q	HILTI KB-TZ2 CONCRETE ANCHOR (ICC ESR-4561) SPECIAL INSPECTION REQ'D MIN. DIA. da INCH	MIN. EFF. EMBED. hef INCH	MIN. HOLE DEPTH ho INCH	MIN. BASE TH. ha INCH	MIN. EDGE Cmin INCH	MIN. SPACING Smin INCH	TORQUE REQ'D FT-LBS
38A TO 38D	320	38A TO 38C	190	30°- 45°	⅜	2½	3¼	8	12	10	15
38A TO 38C	240	38A TO 38B	140	46°- 60°							
50A TO 50E	400	50A TO 50C	240	30°- 45°	½	3¼	4¼	8	12	13	25
50A TO 50D	310	50A TO 50C	190	46°- 60°							
63A TO 63G	640	63A TO 63E	390	30°- 45°	⅝	4	4¾	8	20	16	30
63A TO 63F	520	63A TO 63D	310	46°- 60°							
75A TO 75H	830	75A TO 75F	500	30°- 45°	¾	4¾	5¾	8	20	19	50
75A TO 75G	640	75A TO 75E	380	46°- 60°							

1 SEE DETAIL N0.00 FOR SECTION NOTES

2 HILTI KB-TZ2 MASONRY ANCHOR MUST BE INSTALLED IN THE FACE OF CMU SHELLS A MINIMUM OF 1⅜" FROM ANY VERTICAL MORTAR JOINT .

3 OVERSTRENGTH FACTOR AS REQUIRED FOR ANCHORAGE TO CONCRETE

MASON WEST
1601 E. Miraloma Ave. Placentia, CA 92870
TEL (714) 630 - 0701, www.masonwest.com

Jiefu "Jeff" Zhang, SE
California SE No. S5270

PAGE
N5.20

SEISMIC BRACKET ATTACHMENT
TO FULLY GROUTED CMU WALL
WITH (2) HILTI KB-TZ2 CARBON STEEL CONCRETE ANCHOR

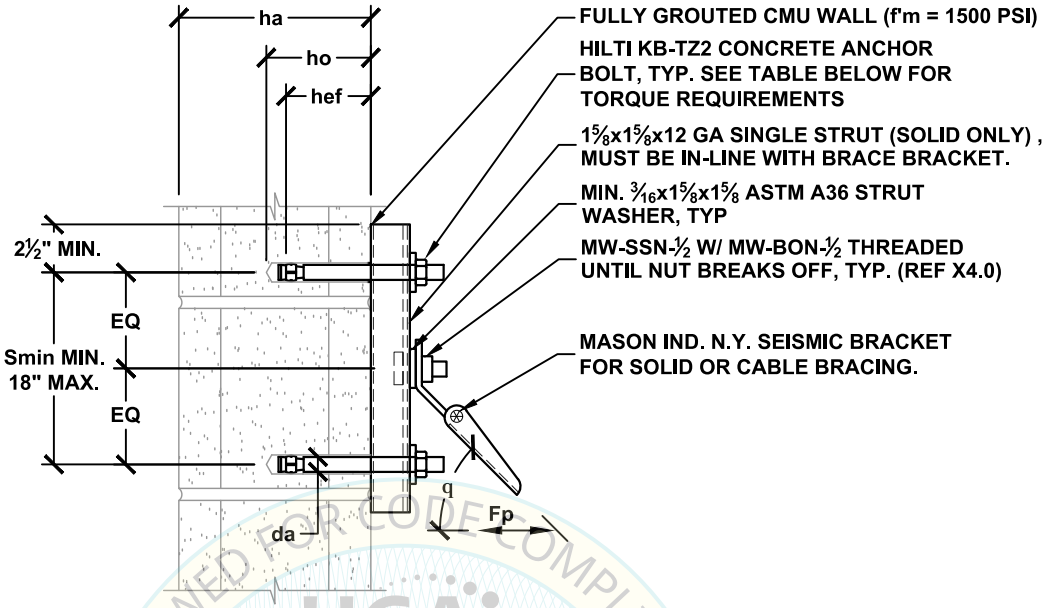

HCAi
OPM-0043
REVIEWED FOR CODE COMPLIANCE
BY: William Staehlin
DATE: 01/23/2023
CALIFORNIA BUILDING CODE

NOTE:

WHEN USING HILTI KB-TZ2 CONCRETE ANCHOR ATTACHMENT TO CMU WALL, SEOR SHALL VERIFY:

(1) MASONRY IS NOT CRACKED AS DEFINED IN ICC-ES AC01 SECTION 2.3; CALCULATION REQUIRED TO SHOW MASONRY WALL WOULD NOT CRACK UNDER THE DESIGN EARTHQUAKE LOADS UNDER ALL SERVICE LOAD CONDITIONS; WALL HAS TO REMAIN ELASTIC.

(2) MASONRY WALL SHALL BE FULLY GROUTED IN ACCORDANCE WITH ESR-4561 SECTION 3.2.

(3) CONDITION OF USE REQUIREMENTS IN ACCORDANCE WITH ESR-4561 SECTION 5.0 IS SATISFIED.

BRACE BRACKET ATTACHMENT TYPE	ALLOWABLE LATERAL LOAD Fp LBS	$\Omega_0 = 2.0^3$ BRACE BRACKET ATTACHMENT TYPE	$\Omega_0 = 2.0^3$ ALLOWABLE LATERAL LOAD Fp LBS	MAX BRACE RANGE q	HILTI KB-TZ2 CONCRETE ANCHOR (ICC ESR-4561) SPECIAL INSPECTION REQ'D DIA. da INCH	MIN. EFF. EMBED. hef INCH	MIN. HOLE DEPTH ho INCH	MIN. BASE TH. ha INCH	MIN. EDGE Cmin INCH	MIN. SPACING Smin INCH	TORQUE REQ'D FT-LBS
50A TO 50H	790	50A TO 50F	480	30°- 45°	½	3¼	4¼	8	12	13	25
50A TO 50G	620	50A TO 50E	370	46°- 60°							
50A TO 50H	1000	50A TO 50H	770	30°- 45°	⅝	4	4¾	8	20	16	30
50A TO 50G	690	50A TO 50G	630	46°- 60°							

1 SEE DETAIL N0.00 FOR SECTION NOTES

2 HILTI KB-TZ2 MASONRY ANCHOR MUST BE INSTALLED IN THE FACE OF CMU SHELLS A MINIMUM OF 1⅜" FROM ANY VERTICAL MORTAR JOINT.

3 OVERSTRENGTH FACTOR AS REQUIRED FOR ANCHORAGE TO CONCRETE

MASON WEST
1601 E. Miraloma Ave. Placentia, CA 92870
TEL (714) 630 - 0701, www.masonwest.com

Jiefu "Jeff" Zhang, SE
California SE No. S5270

PAGE
N5.21

SEISMIC BRACKET ATTACHMENT TO FULL HEIGHT METAL STUD WALL

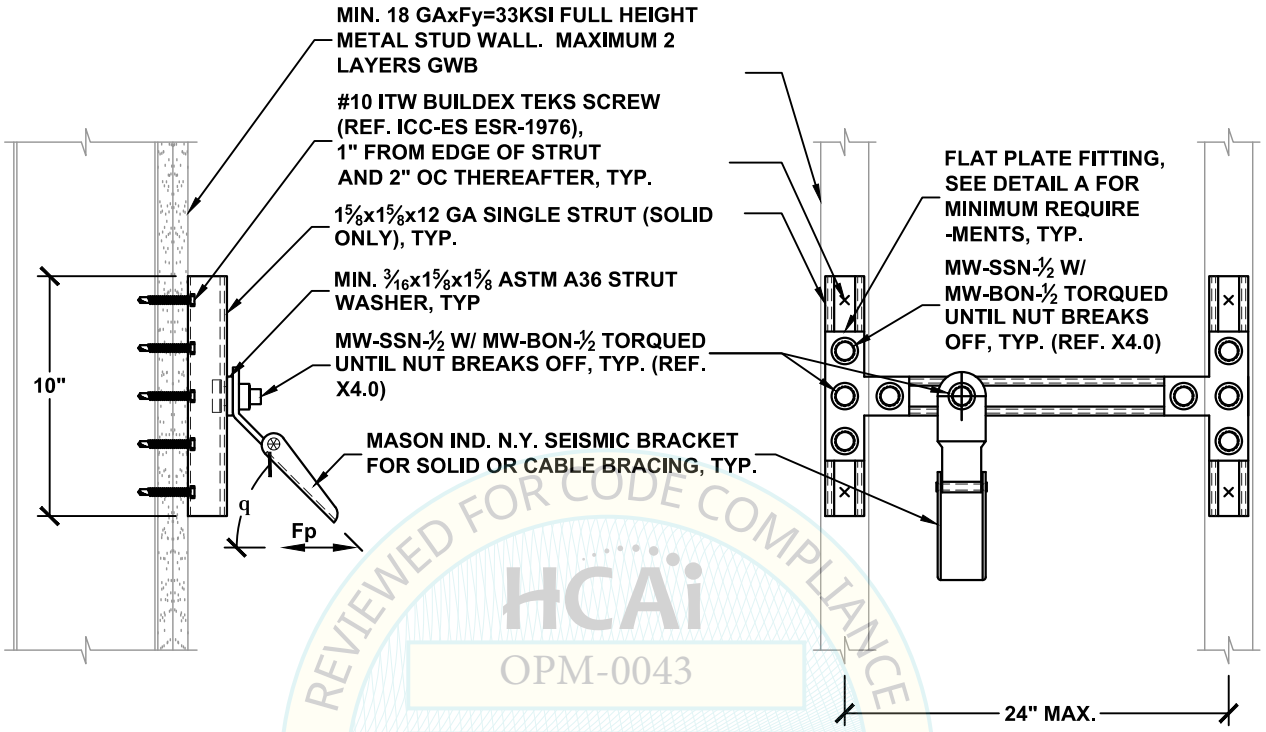

SEISMIC BRACE BRACKET AT STUD **- OR -** **SEISMIC BRACE BRACKET IN BETWEEN STUDS**

REVIEWED FOR CODE COMPLIANCE
HCAi
OPM-0043
BY: William Staehlin
DATE: 01/23/2023
CALIFORNIA BUILDING CODE, 2022

BRACE BRACKET ATTACHMENT TYPE	ALLOWABLE LATERAL LOAD Fp LBS	MAX BRACE RANGE q
50A TO 50D	260	30°- 45°
50A TO 50C	190	46°- 60°

SEE DETAIL N0.00 FOR SECTION NOTES

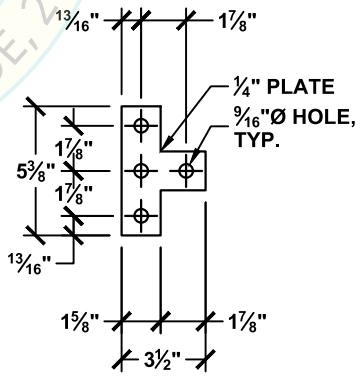

STEEL PLATE TO BE ASTM A36

DETAIL A

MASON WEST
1601 E. Miraloma Ave. Placentia, CA 92870
TEL (714) 630 - 0701, www.masonwest.com

Jiefu "Jeff" Zhang, SE
California SE No. S5270

PAGE
N6.10

SEISMIC BRACKET ATTACHMENT TO FULL HEIGHT METAL STUD WALL

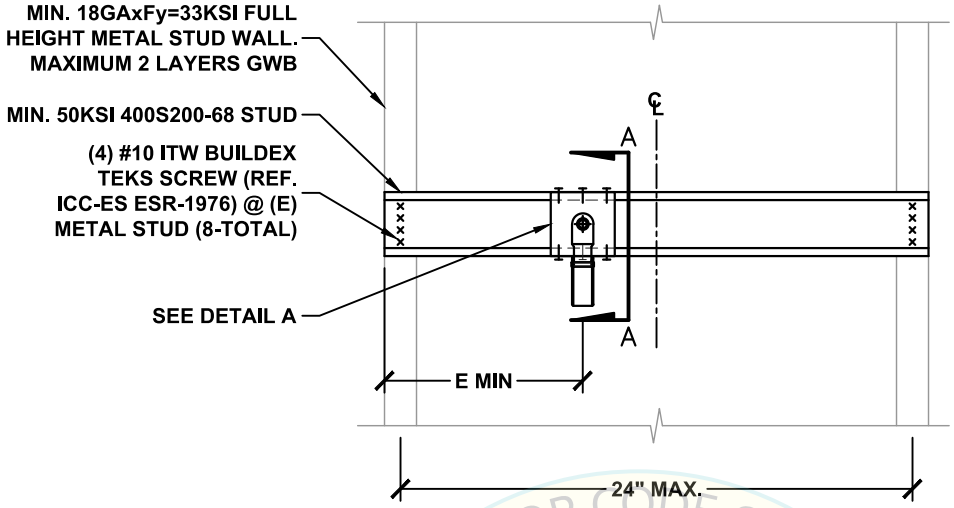

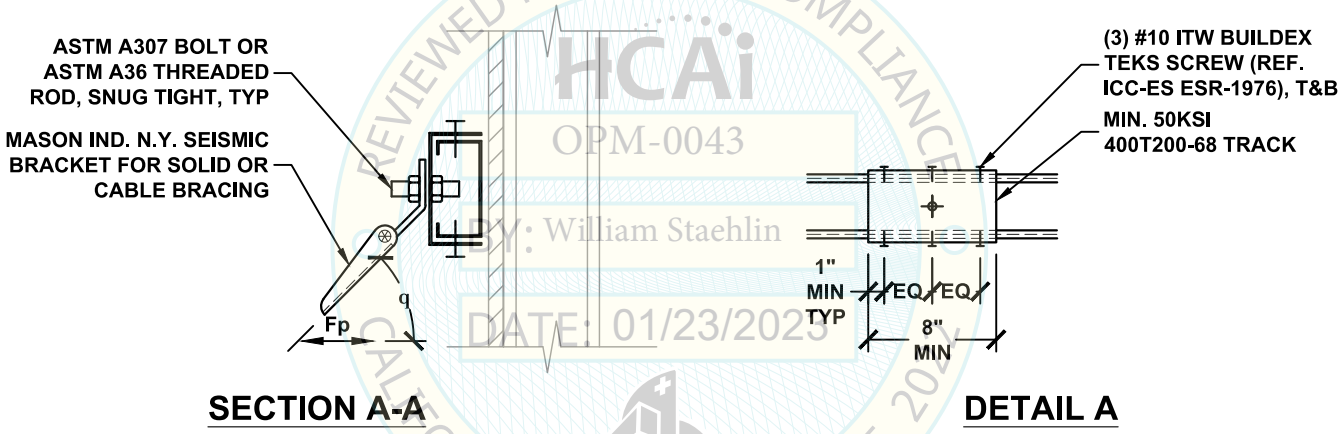

SECTION A-A **DETAIL A**

REVIEWED FOR CODE COMPLIANCE
HCAi
OPM-0043
BY: William Staehlin
DATE: 01/23/2023
CALIFORNIA BUILDING CODE, 2022

BRACE BRACKET ATTACHMENT TYPE	E MIN (in)	ALLOWABLE LATERAL LOAD Fp LBS	MAX BRACE RANGE q
38A TO 38C	4	200	30°- 45°
38A TO 38A		115	46°- 60°
50A TO 50C		200	30°- 45°
50A TO 50A		115	46°- 60°
63A TO 63C		200	30°- 45°
63A TO 63A		115	46°- 60°

SEE DETAIL N0.00 FOR SECTION NOTES

MASON WEST
1601 E. Miraloma Ave. Placentia, CA 92870
TEL (714) 630 - 0701, www.masonwest.com

Jiefu "Jeff" Zhang, SE
California SE No. S5270

PAGE
N6.11

SEISMIC BRACKET ATTACHMENT
TO NON-CONCRETE FILLED METAL DECK

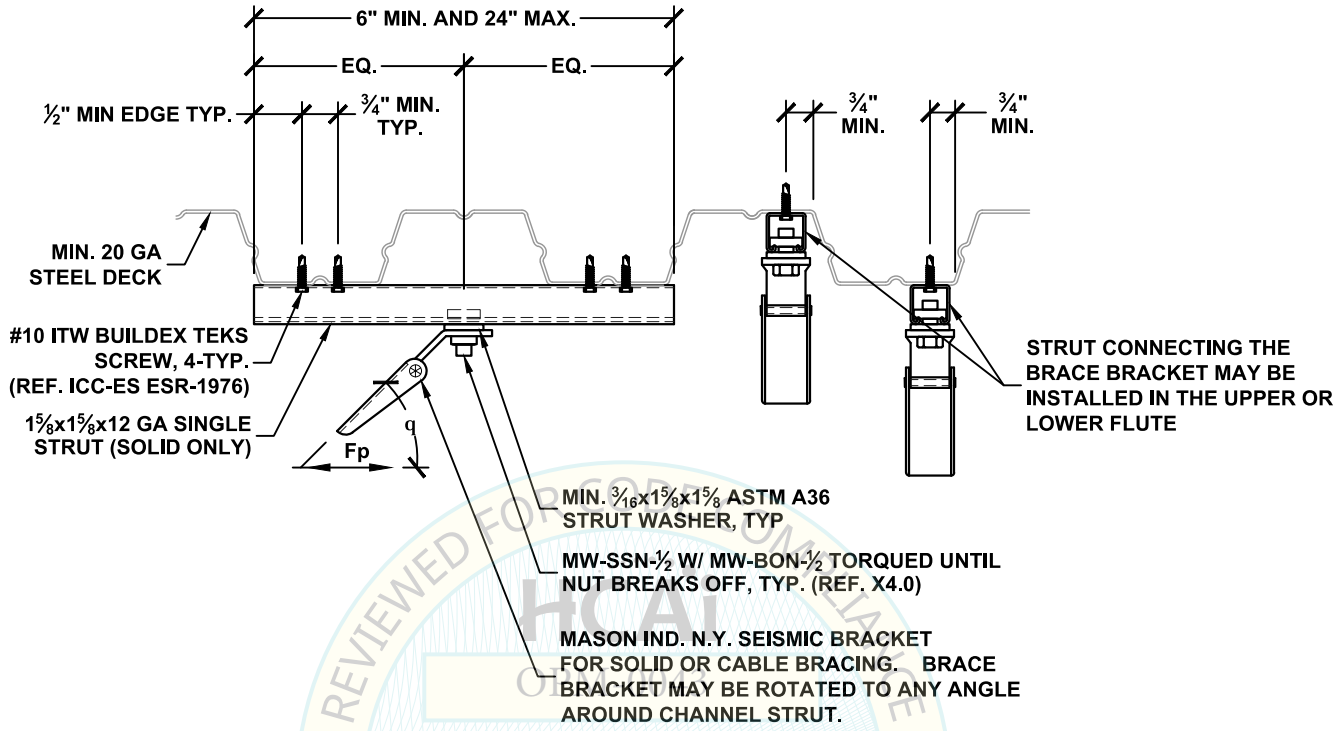

REVIEWED FOR CODE COMPLIANCE
HCAI
CALIFORNIA BUILDING CODE, 2022
BY: William Staehlin
DATE: 01/23/2023

BRACE BRACKET ATTACHMENT TYPE	ALLOWABLE LATERAL LOAD Fp LBS	MAX BRACE RANGE q
50A TO 50E	350	30°- 45°
50A TO 50C	200	46°- 60°

SEE DETAIL N0.00 FOR SECTION NOTES

MASON WEST
1601 E. Miraloma Ave. Placentia, CA 92870
TEL (714) 630 - 0701, www.masonwest.com

Jiefu "Jeff" Zhang, SE
California SE No. S5270

PAGE
N7.10

SUPPLEMENTAL STEEL DETAIL

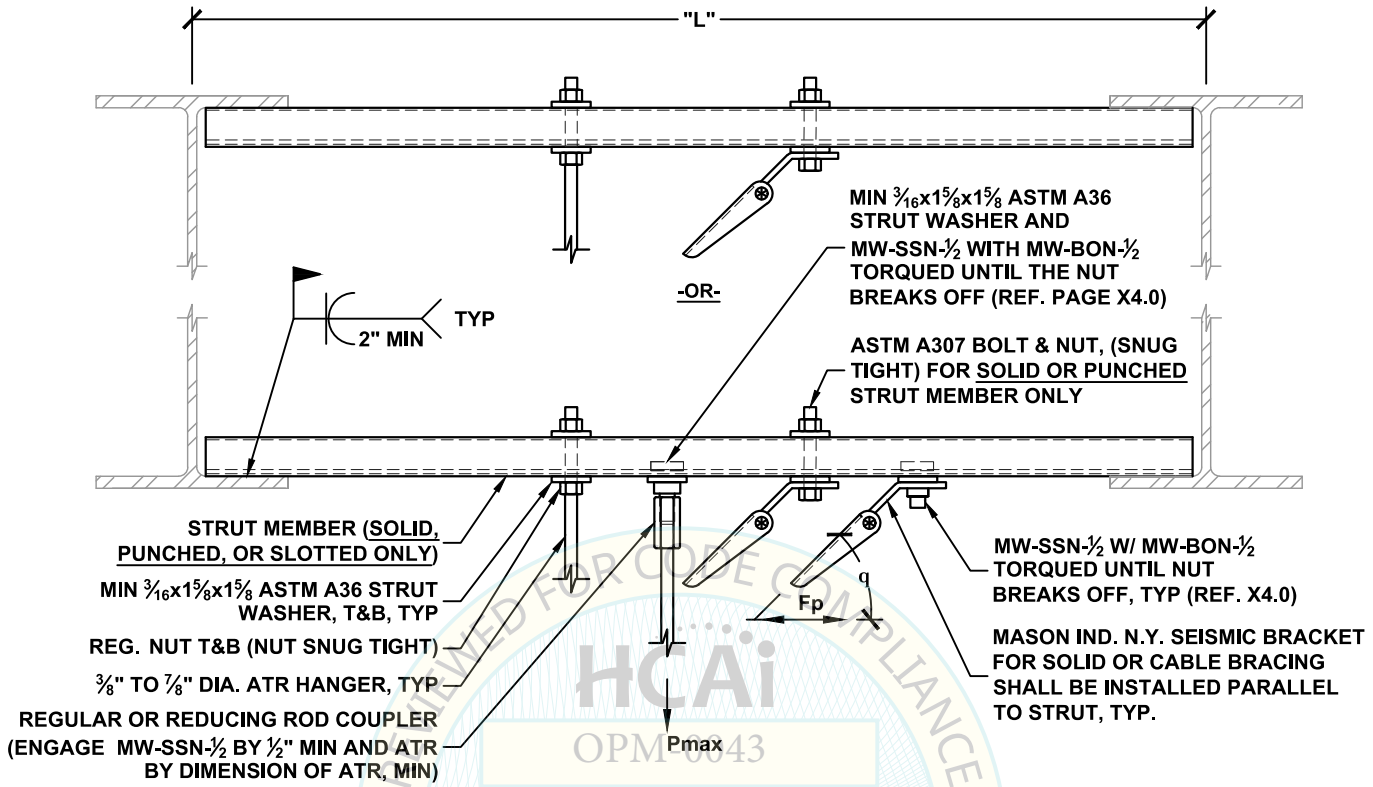

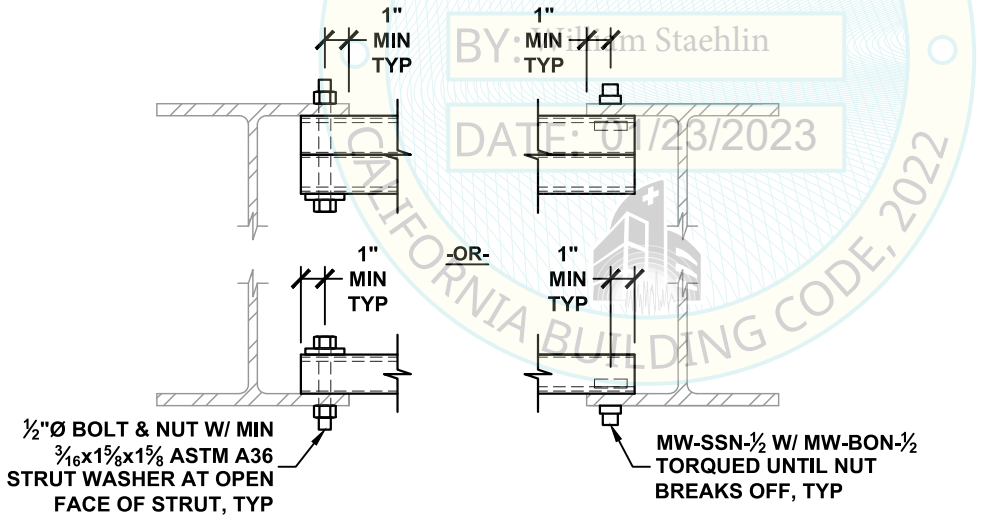

ALTERNATE STEEL ATTACHMENT OPTION FOR SINGLE OR DOUBLE STRUT MEMBER

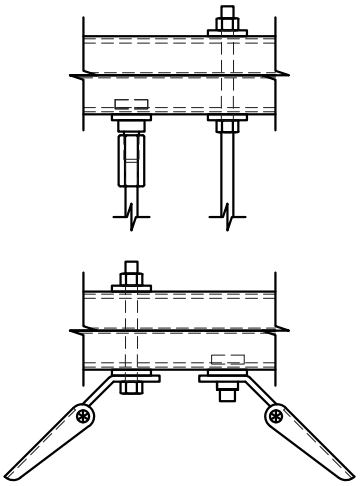

PARTIAL DETAIL FOR DOUBLE STRUT ATTACHMENTS

REVIEWED FOR CODE COMPLIANCE CALIFORNIA BUILDING CODE, 2022
HCAi
OPM-0043
BY: William Staehlin
DATE: 01/23/2023

NOTES:

1. ATTACHMENT TO STEEL BEAM SHALL NOT BE PLACED WITHIN THE PROTECTED ZONE AS DEFINED IN AISC 341.
2. SEE PAGE P1.10.1 FOR MEMBER SIZE AND ALLOWABLE LOADS. MULTIPLE HANGER RODS AND BRACE BRACKETS MAY BE ATTACHED TO STRUT MEMBER PROVIDED THAT THE MAX COMBINED ALLOWABLE LOAD (Pmax + Fp) IS NOT EXCEEDED.
3. FOR BEAM CLAMP ATTACHMENT OPTION FOR SINGLE STRUT, SEE PAGE M3.14.
4. DESIGN IS CONTROLLED BY SEISMIC FORCES. NON-SEISMIC FORCES SUCH AS GRAVITY ARE OUTSIDE THE SCOPE OF THIS OPM.

MASON WEST
1601 E. Miraloma Ave. Placentia, CA 92870
TEL (714) 630 - 0701, www.masonwest.com

Jiefu "Jeff" Zhang, SE
California SE No. S5270

PAGE
P1.10

SUPPLEMENTAL STEEL DETAIL

SUPPLEMENTAL STEEL MEMBER	MAX BRACE RANGE q	MAX BEAM LENGTH "L" FT	COMBINED ALLOWABLE LOAD Pmax + Fp LBS
1⅝"x1⅝"x12GA SINGLE CHANNEL STRUT	30°- 45°	4	300
		6	180
		8	110
		10	70
	46°- 60°	4	180
		6	100
		8	70
		10	50
1⅝"x1⅝"x12GA DOUBLE CHANNEL STRUT	30°- 45°	4	1010
		6	630
		8	430
		10	310
	46°- 60°	4	580
		6	360
		8	250
		10	180

1. ATTACHMENT TO STEEL BEAM SHALL NOT BE PLACED WITHIN THE PROTECTED ZONE AS DEFINED IN AISC 341.
2. MULTIPLE HANGER RODS AND BRACE BRACKETS MAY BE ATTACHED TO STRUT MEMBER PROVIDED THAT THE MAX COMBINED ALLOWABLE LOAD (Pmax + Fp) IS NOT EXCEEDED.
3. FOR BEAM CLAMP ATTACHMENT OPTION FOR SINGLE STRUT, SEE PAGE M3.14.
4. DESIGN IS CONTROLLED BY SEISMIC FORCES. NON-SEISMIC FORCES SUCH AS GRAVITY ARE OUTSIDE THE SCOPE OF THIS OPM.

REVIEWED FOR CODE COMPLIANCE
IAPMO ES
OPM-0043
CALIFORNIA BUILDING CODE, 2022

MASON WEST
1601 E. Miraloma Ave. Placentia, CA 92870
TEL (714) 630 - 0701, www.masonwest.com

Jiefu "Jeff" Zhang, SE
California SE No. S5270

SUPPLEMENTAL STEEL DETAIL

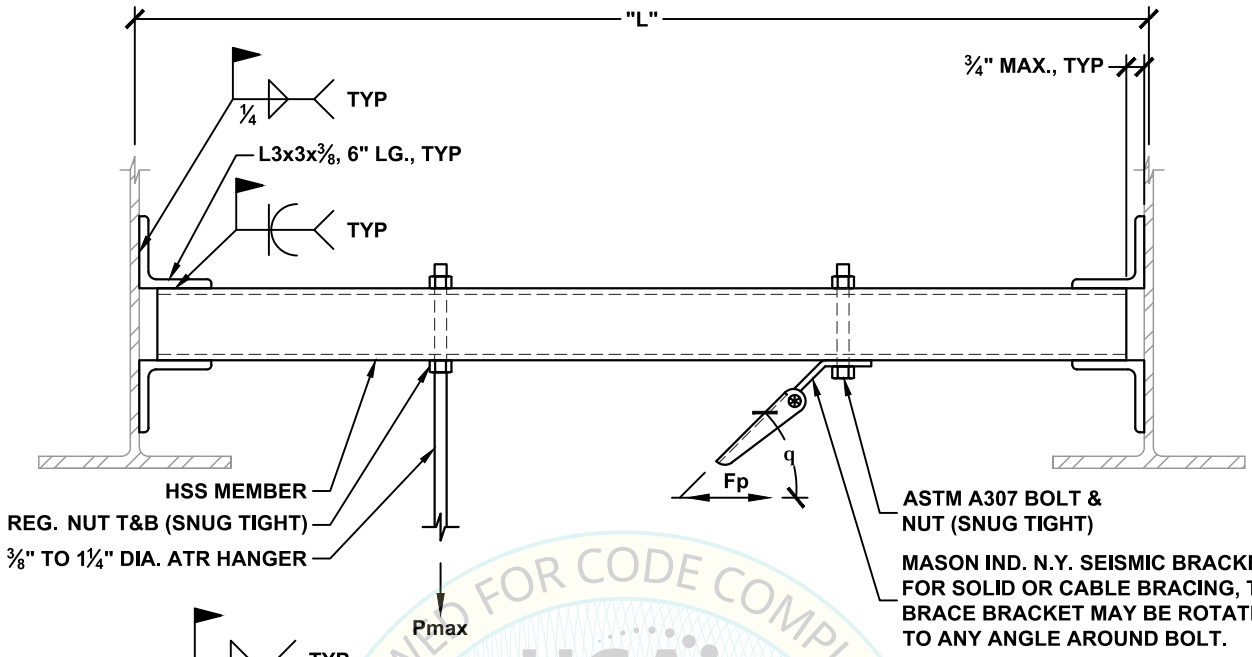

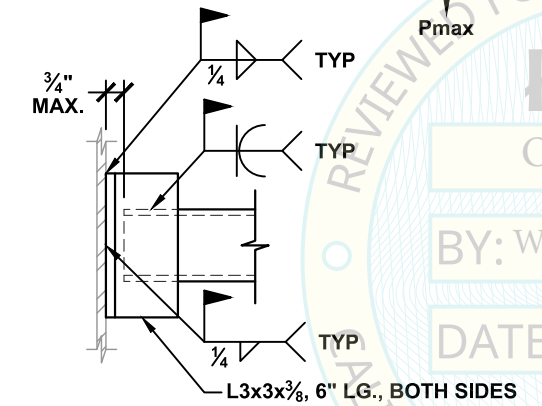

-OR-

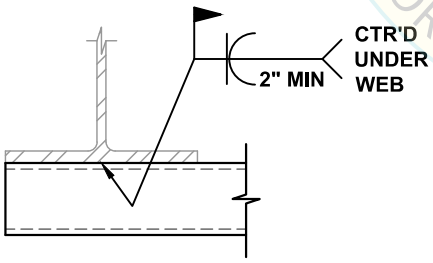

ALTERNATE STEEL ATTACHMENT OPTION

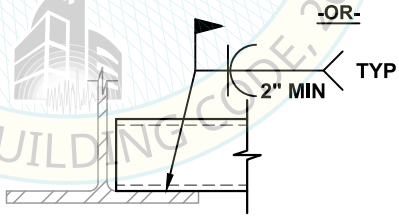

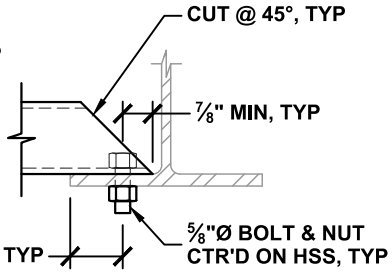

ALTERNATE STEEL ATTACHMENT OPTION

REVIEWED FOR CODE COMPLIANCE
HCAi
OPM-0043
BY: William Staehlin
DATE: 01/23/2023
CALIFORNIA BUILDING CODE 2022

NOTES:

1. ATTACHMENT TO STEEL BEAM SHALL NOT BE PLACED WITHIN THE PROTECTED ZONE AS DEFINED IN AISC 341.
2. SEE PAGE P1.11.1 FOR MEMBER SIZE AND ALLOWABLE LOADS. MULTIPLE HANGER RODS AND BRACE BRACKETS MAY BE ATTACHED TO HSS MEMBER PROVIDED THAT THE MAX COMBINED ALLOWABLE LOAD (Pmax + Fp) IS NOT EXCEEDED.
3. DESIGN IS CONTROLLED BY SEISMIC FORCES. NON-SEISMIC FORCES SUCH AS GRAVITY ARE OUTSIDE THE SCOPE OF THIS OPM.

MASON WEST
1601 E. Miraloma Ave. Placentia, CA 92870
TEL (714) 630 - 0701, www.masonwest.com

Jiefu "Jeff" Zhang, SE
California SE No. S5270

PAGE
P1.11

SUPPLEMENTAL STEEL DETAIL

SUPPLEMENTAL STEEL MEMBER	MAX BRACE RANGE q	MAX BEAM LENGTH "L" FT	COMBINED ALLOWABLE LOAD Pmax + Fp LBS
HSS3x3x¼	30°- 45°	4	2850
		6	1900
		8	1420
		10	1140
	46°- 60°	4	2080
		6	1390
		8	1040
		10	830
HSS4x4x¼	30°- 45°	4	5400
		6	3600
		8	2700
		10	2160
	46°- 60°	4	3950
		6	2640
		8	1980
		10	1580

1 ATTACHMENT TO STEEL BEAM SHALL NOT BE PLACED WITHIN THE PROTECTED ZONE AS DEFINED IN AISC 341.

2 MULTIPLE HANGER RODS AND BRACE BRACKETS MAY BE ATTACHED TO HSS MEMBER PROVIDED THAT THE MAX COMBINED ALLOWABLE LOAD (Pmax + Fp) IS NOT EXCEEDED.

3 DESIGN IS CONTROLLED BY SEISMIC FORCES. NON-SEISMIC FORCES SUCH AS GRAVITY ARE OUTSIDE THE SCOPE OF THIS OPM.

REVIEWED FOR CODE COMPLIANCE
HCAI
OPM-0043
CALIFORNIA BUILDING CODE, 2022

MASON WEST
1601 E. Miraloma Ave. Placentia, CA 92870
TEL (714) 630 - 0701, www.masonwest.com

Jiefu "Jeff" Zhang, SE
California SE No. S5270

PAGE
P1.11.1

SUPPLEMENTAL STEEL DETAIL
WITH (2) BADGER INDUSTRIES SBC158 SERIES STEEL BEAM CLAMPS

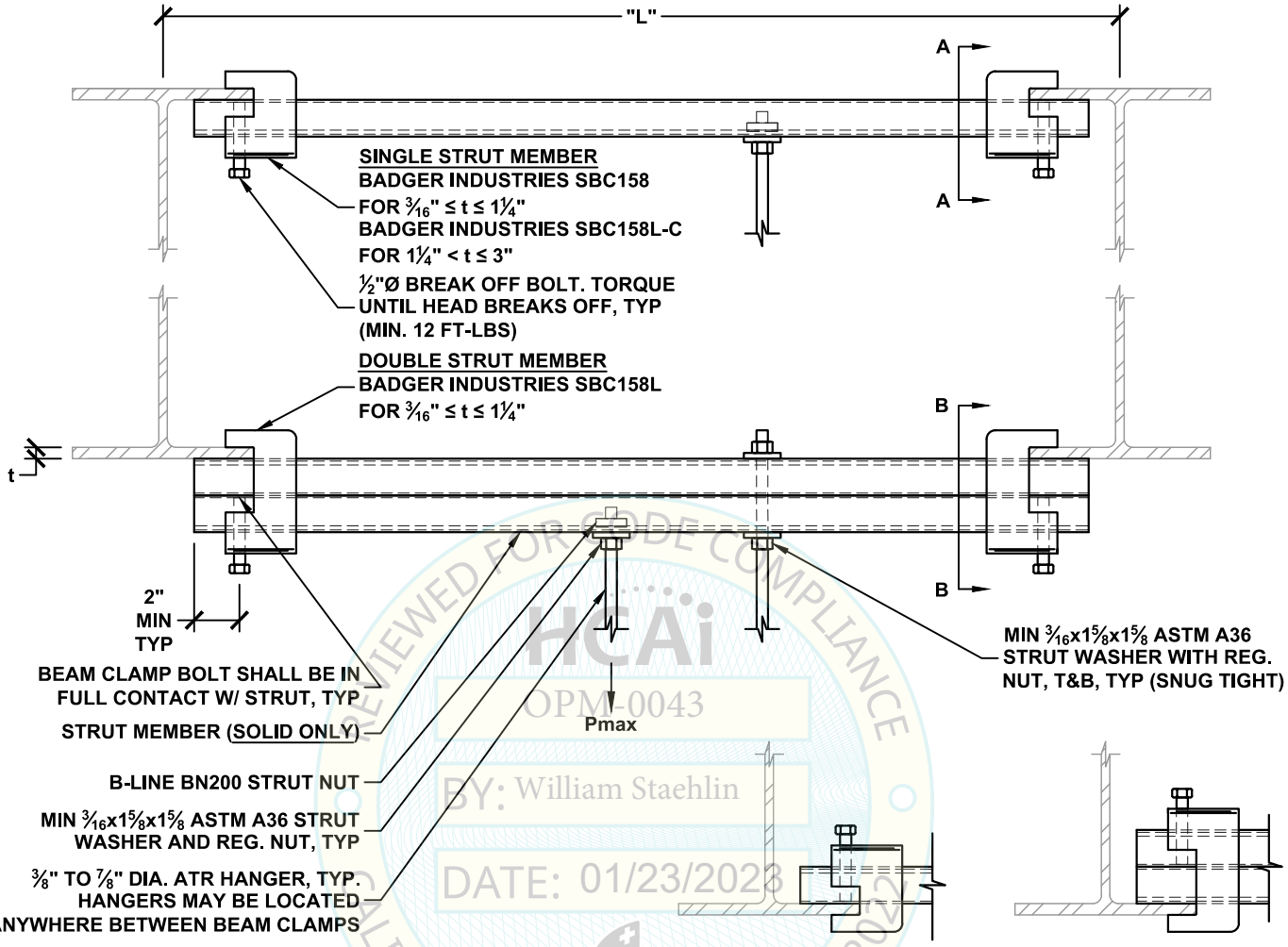

REVIEWED FOR CODE COMPLIANCE
HCAi
OPM-0043
BY: William Staehlin
DATE: 01/23/2023
CALIFORNIA BUILDING CODE 2022

ALTERNATE ATTACHMENT OPTIONS

SUPPLEMENTAL STEEL MEMBER	MAX BEAM LENGTH "L" FT	ALLOWABLE VERTICAL LOAD Pmax LBS
1 5/8"x1 5/8"x12GA SINGLE CHANNEL STRUT	4	350
	6	200
	8	110
	10	70
1 5/8"x1 5/8"x12GA DOUBLE CHANNEL STRUT	4	1010
	6	620
	8	500
	10	360

FASTENER WITH STRUT NUT	
DIA. INCH	TORQUE REQ'D FT-LBS
3/8	19
1/2 - 3/4	50

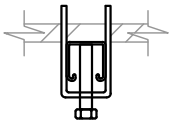

VIEW A-A

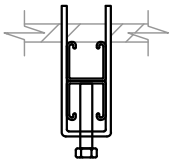

VIEW B-B

NOTES:
1. ATTACHMENT TO STEEL BEAM SHALL NOT BE PLACED WITHIN THE PROTECTED ZONE AS DEFINED IN AISC 341.
2. MULTIPLE HANGER RODS MAY BE ATTACHED TO STRUT MEMBER PROVIDED THE MAX ALLOWABLE LOAD (Pmax) IS NOT EXCEEDED.

MASON WEST
1601 E. Miraloma Ave. Placentia, CA 92870
TEL (714) 630 - 0701, www.masonwest.com

Jiefu "Jeff" Zhang, SE
California SE No. S5270

PAGE
P1.12

PIPE	STEEL PIPE (STANDARD SCHEDULE) WATER FILLED WITH INSULATION MAXIMUM SEISMIC BRACE SPACINGS	VERTICAL FORCE Fpv = 0.375g (ASD)

NPS	PIPE SCHEDULE	MAX WEIGHT PER FOOT (LBS/FT)	MAX GRAVITY SUPPORT SPACING (FT)	MAX TRANSVERSE BRACE SPACING BASED ON PIPE SIZE AND g FORCE (FT)						
				g FORCE						
				0.25	0.375	0.5	0.625	0.75	0.875	1
1 1/4	40	3.8	7	35	32	30	28	26	25	24
1 1/2	40	4.5	9	38	35	32	30	29	27	26
2	40	6.2	10	43	39	36	34	32	31	30
2 1/2	40	9.1	11	48	43	40	38	36	35	34
3	40	12.1	12	53	48	44	42	40	39	37
4	40	18.3	14	59	53	50	47	45	43	42
5	40	26.6	15	65	59	54	52	49	46	43
6	40	34.8	17	71	64	59	56	52	48	45
8	40	55.1	19	80	72	67	60	55	51	47
10	40	80.2	20	89	80	72	64	58	54	51
12	STD	109	20	94	81	70	63	57	53	50
14	30	122	20	75	61	53	47	43	40	37
16	30	150	20	73	60	52	46	42	39	36
18	STD	190	20	68	56	48	43	39	37	34
20	20	214	20	69	56	49	43	40	37	34
24	20	289	20	64	53	46	41	37	34	32
30	STD	422	20	58	47	41	37	34	31	29

REVIEWED FOR CODE COMPLIANCE
HCAi
OPM-0043
BY: William Staehlin
DATE: 01/23/2023
AHJ FOR CBC CODE, 2022

NOTES:

1. MAXIMUM BRACE SPACING IS BASED ON ASME B31E DESIGN BY ANALYSIS EQUATION. PIPE SIZE, MATERIALS, PRESSURES, ETC. NOT USED TO DETERMINE THESE TABLES MAY USE ASME B31E DESIGN BY ANALYSIS TO DETERMINE THE MAXIMUM SEISMIC BRACE SPACINGS ON A PROJECT BY PROJECT BASIS.
2. MAXIMUM GRAVITY SUPPORT SPACING IS BASED ON MSS SP-58 TABLE 4 LIMITED TO 20 FEET. PIPE WEIGHTS USED ARE BASED ON STANDARD SCHEDULE STEEL PIPES (40S) INCLUDING WATER AND INSULATION (REFER TO APPENDIX). PIPES WITH THICKER WALLS AND / OR FILLED WITH VAPOR OR GAS MAY USE SPACINGS AS TABULATED.
3. FOR LONGITUDINAL AND ALL-DIRECTIONAL BRACE SPACING, TRIPLE THE VALUES IN THE ABOVE TABLE. BRACE AND / OR CONNECTION CAPACITY MAY GOVERN MAXIMUM SPACING IN SOME CASES.
4. BRACE SPACINGS ARE BASED ON STEEL PIPE CONFORMING TO ASTM SPECIFICATION A53, TYPE E, GRADE B WITH MINIMUM Fy = 35 ksi AND S_A = 14.6 ksi AT MAXIMUM OPERATING PRESSURE AND TEMPERATURE OF 400psi AND 650°F, RESPECTIVELY. FOR ASTM A53, TYPE E, GRADE A WITH MINIMUM Fy=30 ksi AND S_A = 11.7 ksi, REDUCE SPACINGS BY A FACTOR OF 1.20 UP TO 14"Ø PIPE, 1.33 UP TO 30"Ø PIPE. STEEL PIPES, INCLUDING STAINLESS, WITH Fy AND S_A VALUES MEETING OR EXCEEDING ABOVE STATED MINIMUMS PER ASME B31 APPENDIX A MAY USE TABULATED SPACINGS WITH APPROPRIATE REDUCTION FACTORS, WHERE APPLICABLE.
5. PIPE FITTINGS AS IDENTIFIED IN ASME B31 APPENDIX D MAY INCLUDE THE FOLLOWING: LONG OR SHORT RADIUS ELBOWS, WELDING TEES, BRANCH WELD-ON FITTINGS, WELDED-IN CONTOUR FITTINGS AND CONCENTRIC REDUCERS. FOR FABRICATED TEES REDUCE SPACING BY A FACTOR OF 1.33 UP TO 12"Ø PIPE. (FABRICATED TEES ARE ACCEPTABLE FOR 14"Ø TO 30"Ø PIPE).
6. ACCEPTABLE PIPE CONNECTIONS INCLUDE BUTT WELDS, FILLET WELDS, THREADED JOINTS OR FLANGES AND RIGID GROOVED COUPLINGS. RIGID GROOVED COUPLINGS LISTED FOR UL STANDARD 213 MAY USE LISTED MAXIMUM BRACE SPACINGS (REF. A10.6, NOTES.)

MASON WEST
1601 E. Miraloma Ave. Placentia, CA 92870
TEL (714) 630 - 0701, www.masonwest.com

Jiefu "Jeff" Zhang, SE
California SE No. S5270

PAGE
S1.0

PIPE	STEEL PIPE (WATER FILLED) SCHEDULE 10 WITHOUT INSULATION SCHEDULE 80 WITH INSULATION MAXIMUM SEISMIC BRACE SPACINGS	VERTICAL FORCE Fpv = 0.375g (ASD)

NPS	PIPE SCHEDULE OR TYPE	WT/FT	MAX GRAVITY SUPPORT SPACING (FT)	MAX TRANSVERSE BRACE SPACING BASED ON PIPE SIZE AND g FORCE (FT)						
				g FORCE						
				0.25	0.375	0.5	0.625	0.75	0.875	1
1 1/4	10	2.5	10	37	34	32	30	28	26	25
1 1/2	10	3.0	10	40	36	33	32	29	27	25
2	10	4.2	10	44	40	36	32	29	27	25
2 1/2	10	5.9	10	48	43	38	34	31	29	27
3	10	8.0	10	52	43	37	33	30	28	26
4	10	11.8	10	50	41	36	32	29	27	25
5	10	17.3	10	53	43	37	33	31	28	26
6	10	23.1	10	51	41	36	32	29	27	25
8	10	40.1	10	49	40	35	31	28	26	24
1 1/4	80	4.4	7	36	33	30	28	27	25	24
1 1/2	80	5.3	9	39	35	33	31	29	28	27
2	80	7.3	10	44	40	37	35	33	32	30
2 1/2	80	10.7	11	49	44	41	39	37	36	34
3	80	14.4	12	54	49	45	43	41	39	38
4	80	21.8	14	61	55	51	48	46	44	42
5	80	31.6	16	67	61	56	53	51	49	46
6	80	43.2	17	73	66	62	58	56	54	50
8	80	67.3	19	83	75	70	66	63	60	56
10	80	100.7	20	93	84	78	74	71	66	62
12	80	138.8	20	101	92	85	81	77	73	68

REVIEWED FOR CODE COMPLIANCE
HCAi
OPM-0043
BY: William Staehlin
DATE: 01/23/2023
CALIFORNIA BUILDING CODE 2022

NOTES:

1. MAXIMUM BRACE SPACING IS BASED ON ASME B31E DESIGN BY ANALYSIS EQUATION. PIPE SIZE, MATERIALS, PRESSURES, ETC. NOT USED TO DETERMINE THESE TABLES MAY USE ASME B31E DESIGN BY ANALYSIS TO DETERMINE THE MAXIMUM SEISMIC BRACE SPACINGS ON A PROJECT BY PROJECT BASIS.
2. PIPE WEIGHTS USED ARE BASED ON PIPE SCHEDULED WEIGHT INCLUDING WATER AND INSULATION FOR SCHEDULE 80 PIPE (REFER TO APPENDIX). PIPES WITH THICKER WALLS AND / OR FILLED WITH VAPOR OR GAS MAY USE SPACINGS AS TABULATED.
3. FOR LONGITUDINAL AND ALL-DIRECTIONAL BRACE SPACING, TRIPLE THE VALUES IN THE ABOVE TABLE. BRACE AND / OR CONNECTION CAPACITY MAY GOVERN MAXIMUM SPACING IN SOME CASES.
4. BRACE SPACINGS ARE BASED ON STEEL PIPE CONFORMING TO ASTM SPECIFICATION A53, TYPE E, GRADE A WITH MINIMUM Fy = 30 ksi AND S_A= 11.7 ksi AT MAXIMUM OPERATING PRESSURE AND TEMPERATURE OF 400psi AND 650°F. STEEL PIPES, INCLUDING STAINLESS, WITH Fy AND S_A VALUES MEETING OR EXCEEDING ABOVE STATED MINIMUMS PER ASME B31 APPENDIX A MAY USE TABULATED SPACINGS WITH APPROPRIATE REDUCTION FACTORS, WHERE APPLICABLE.
5. PIPE FITTINGS AS IDENTIFIED IN ASME B31 APPENDIX D MAY INCLUDE THE FOLLOWING: LONG OR SHORT RADIUS ELBOWS, WELDING TEES, BRANCH WELD-ON FITTINGS, WELDED-IN CONTOUR FITTINGS AND CONCENTRIC REDUCERS. FOR FABRICATED TEES CALCULATE BRACE SPACINGS PER NOTE 1.
6. ACCEPTABLE PIPE CONNECTIONS INCLUDE BUTT WELDS, FILLET WELDS, THREADED JOINTS OR FLANGES AND RIGID GROOVED COUPLINGS. RIGID GROOVED COUPLINGS LISTED FOR UL STANDARD 213 MAY USE LISTED MAXIMUM BRACE SPACINGS (REF. A10.6, NOTES.)

MASON WEST
1601 E. Miraloma Ave. Placentia, CA 92870
TEL (714) 630 - 0701, www.masonwest.com

Jiefu "Jeff" Zhang, SE
California SE No. S5270

PAGE
S1.1

PIPE	COPPER PIPE TYPE K OR L MAXIMUM SEISMIC BRACE SPACINGS	VERTICAL FORCE Fpv = 0.375g (ASD)

PIPE W/WATER AND INSULATION

NPS	WT/FT	MAX GRAVITY SUPPORT SPACING (FT)	MAX TRANSVERSE BRACE SPACING BASED ON PIPE SIZE AND g FORCE (FT)						
			g FORCE						
			0.25	0.375	0.5	0.625	0.75	0.875	1
1 1/4	2.30	7	24	21	18	16	15	14	13
1 1/2	2.80	8	27	23	20	18	16	15	14
2	4.20	8	32	28	24	22	20	18	17
2 1/2	5.80	9	36	32	27	24	22	21	19
3	7.60	10	39	35	30	27	25	23	21
4	12.4	10	45	41	36	33	30	28	26
5	18.6	10	49	45	39	35	32	30	28
6	25.1	10	54	49	43	39	35	33	30
8	43.7	10	63	57	53	47	43	40	37
10	66.9	10	71	64	60	54	49	46	43
12	91.8	10	78	70	65	59	54	50	46
PIPE ONLY (GAS)									
1 1/4	1.04	9	32	28	26	24	22	21	20
1 1/2	1.36	10	34	31	29	27	25	24	23
2	2.06	10	40	36	33	31	30	29	27
2 1/2	2.93	10	44	40	37	35	33	32	31
3	4.00	10	48	43	40	38	37	35	34
4	6.51	10	55	50	46	44	42	40	39
5	9.67	10	62	56	52	49	47	45	44
6	13.9	10	67	61	57	54	51	49	48
8	25.9	10	78	70	65	62	59	57	55
10	40.3	10	87	78	73	69	66	63	61
12	57.8	10	95	86	80	75	72	69	67

REVIEWED FOR CODE COMPLIANCE
HCAI
OPM-0043
BY: William Staehlin
DATE: 01/23/2023
CALIFORNIA BUILDING CODE, 2022

NOTES:

1. MAXIMUM BRACE SPACING IS BASED ON ASME B31E DESIGN BY ANALYSIS. PIPE SIZE, MATERIALS, PRESSURES, ETC. NOT USED TO DETERMINE THESE TABLES MAY USE ASME B31E DESIGN BY ANALYSIS TO DETERMINE THE MAXIMUM SEISMIC BRACE SPACINGS ON A PROJECT BY PROJECT BASIS.
2. MAXIMUM GRAVITY SPACING IS BASED ON MSS SP-58 TABLE 4, LIMITED TO 10 FEET.
3. FOR LONGITUDINAL AND ALL-DIRECTIONAL BRACE SPACING, TRIPLE THE VALUES IN THE ABOVE TABLE. BRACE AND OR CONNECTION CAPACITY MAY GOVERN MAXIMUM SPACINGS IN SOME CASES.
4. BRACE SPACINGS ARE BASED ON PIPE CONFORMING TO ASTM SPECIFICATION B88 TYPE K OR L COPPER PIPE WITH MAXIMUM OPERATING PRESSURE AND TEMPERATURE OF 100 PSI AND 250°F, RESPECTIVELY. PIPING MAY BE DRAWN OR ANNEALED WITH SOLDERED OR BRAZED JOINTS.

MASON WEST
1601 E. Miraloma Ave. Placentia, CA 92870
TEL (714) 630 - 0701, www.masonwest.com

Jiefu "Jeff" Zhang, SE
California SE No. S5270

PAGE
S1.2.1

PIPE	CAST IRON SOIL PIPE FILLED WITH WATER MAXIMUM SEISMIC BRACE SPACINGS	VERTICAL FORCE Fpv = 0.375g (ASD)

NPS	MAX WEIGHT PER FOOT (LBS/FT)	MAX GRAVITY SUPPORT SPACING [2] (FT)	MAX TRANSVERSE BRACE SPACING BASED ON PIPE SIZE AND g FORCE (FT)					MAX LONGITUDINAL BRACE SPACING BASED ON PIPE SIZE AND g FORCE (FT)				
			g FORCE					g FORCE				
			0.25	0.375	0.5	0.75	1	0.25	0.375	0.5	0.75	1
3	8.4	8	22	18	16	13	11	40	36	32	22	17
4	13.0	8	25	21	18	14	10	40	40	36	26	19
5	18.0	8	26	21	18	12	10	40	40	40	29	22
6	23.4	8	26	21	17	11	10	40	40	40	29	22
8	40.2	8	26	18	13	10	10	40	33	25	17	13
10	60.8	8	22	15	11	10	10	31	21	16	10	10
12	82.1	8	10	10	10	10	10	10	10	10	10	10

NOTES:

1. MAXIMUM BRACE SPACING IS BASED ON ASTM C1540, FM 1680 CLASS I, AND ASCE 7-10 SECTION 13.6.8, NOTE c, 10 PERCENT OF THE MATERIAL MINIMUM SPECIFIED TENSILE STRENGTH FOR CAST IRON.
2. MAXIMUM GRAVITY SPACING IS BASED ON SUPPORT OF STANDARD 10 FOOT MAXIMUM PIPE LENGTH SEGMENTS SUPPORTED WITHIN 18 INCHES IN EACH DIRECTION FROM JOINT CONNECTION. TRIBUTARY LENGTH FOR EACH SUPPORT SHALL NOT EXCEED 5 FEET OF PIPE FULL OF WATER. PIPE WEIGHTS CONSIDERED FULL OF WATER (REFER TO APPENDIX).
3. BRACE SPACING SHALL BE 10 FEET MINIMUM AND 40 FEET MAXIMUM. BRACE AND OR CONNECTION CAPACITY MAY GOVERN MAXIMUM SPACING IN SOME CASES.
4. BRACE SPACINGS ARE BASED ON CAST IRON PIPE CONSTRUCTED TO ASTM A 888 OR CISPI 301 STANDARDS WITH A MINIMUM TENSILE STRENGTH OF 21,000 PSI.
5. CAST IRON PIPE (NO-HUB PIPE) BRACE SPACINGS SHALL NOT EXCEED THE TABULATED SPACINGS. NO-HUB COUPLINGS SHALL BE MANUFACTURED IN ACCORDANCE WITH ASTM C1540, SHALL BE CERTIFIED IN ACCORDANCE WITH FM 1680 CLASS I, AND GRAVITY HANGERS SHALL BE SPACED PER THE REQUIREMENTS OF TABLE 313.1 OF THE 2013 CALFORNIA PLUMBING CODE (CPC 2013) FOR NO-HUB CAST IRON PIPE.

REVIEWED FOR CODE COMPLIANCE
HCAi
OPM-0043
BY: William Staehlin
DATE: 01/23/2023
CALIFORNIA BUILDING CODE, 2022

MASON WEST
1601 E. Miraloma Ave. Placentia, CA 92870
TEL (714) 630 - 0701, www.masonwest.com

Jiefu "Jeff" Zhang, SE
California SE No. S5270

PAGE
S1.4

PIPE	CAST IRON SOIL PIPE FOR EMPTY SYSTEMS (NO WATER) MAXIMUM SEISMIC BRACE SPACINGS	VERTICAL FORCE Fpv = 0.375g (ASD)

NPS	MAX WEIGHT PER FOOT (LBS/FT)	MAX GRAVITY SUPPORT SPACING [2] (FT)	MAX TRANSVERSE BRACE SPACING BASED ON PIPE SIZE AND g FORCE (FT)					MAX LONGITUDINAL BRACE SPACING BASED ON PIPE SIZE AND g FORCE (FT)				
			g FORCE					g FORCE				
			0.25	0.375	0.5	0.75	1	0.25	0.375	0.5	0.75	1
3	5.2	8	22	18	16	13	11	40	36	32	26	22
4	7.4	8	25	21	18	15	13	40	40	36	30	26
5	9.4	8	28	23	20	16	14	40	40	40	32	28
6	11.0	8	30	24	21	17	15	40	40	40	34	30
8	18.0	8	35	32	25	20	15	40	40	40	37	28
10	25.8	8	40	34	26	17	13	40	40	37	24	18
12	32.5	8	10	10	10	10	10	10	10	10	10	10

NOTES:

1. MAXIMUM BRACE SPACING IS BASED ON ASTM C1540, FM 1680 CLASS I, AND ASCE 7-10 SECTION 13.6.8, NOTE c, 10 PERCENT OF THE MATERIAL MINIMUM SPECIFIED TENSILE STRENGTH FOR CAST IRON.
2. MAXIMUM GRAVITY SPACING IS BASED ON SUPPORT OF STANDARD 10 FOOT MAXIMUM PIPE LENGTH SEGMENTS SUPPORTED WITHIN 18 INCHES IN EACH DIRECTION FROM JOINT CONNECTION. TRIBUTARY LENGTH FOR EACH SUPPORT SHALL NOT EXCEED 5 FEET OF PIPE. PIPE WEIGHTS CONSIDERED EMPTY (REFER TO APPENDIX).
3. BRACE SPACING SHALL BE 10 FEET MINIMUM AND 40 FEET MAXIMUM. BRACE AND OR CONNECTION CAPACITY MAY GOVERN MAXIMUM SPACING IN SOME CASES.
4. BRACE SPACINGS ARE BASED ON CAST IRON PIPE CONSTRUCTED TO ASTM A 888 OR CISPI 301 STANDARDS WITH A MINIMUM TENSILE STRENGTH OF 21,000 PSI.
5. CAST IRON PIPE (NO-HUB PIPE) BRACE SPACINGS SHALL NOT EXCEED THE TABULATED SPACINGS. NO-HUB COUPLINGS SHALL BE MANUFACTURED IN ACCORDANCE WITH ASTM C1540, SHALL BE CERTIFIED IN ACCORDANCE WITH FM 1680 CLASS I, AND GRAVITY HANGERS SHALL BE SPACED PER THE REQUIREMENTS OF TABLE 313.1 OF THE 2013 CALFORNIA PLUMBING CODE (CPC 2013) FOR NO-HUB CAST IRON PIPE.

REVIEWED FOR CODE COMPLIANCE
HCAi
OPM-0043
BY: William Staehlin
DATE: 01/23/2023
CALIFORNIA BUILDING CODE, 2022

MASON WEST
1601 E. Miraloma Ave. Placentia, CA 92870
TEL (714) 630 - 0701, www.masonwest.com

Jiefu "Jeff" Zhang, SE
California SE No. S5270

PAGE
S1.5

CONDUIT	ELECTRICAL METALLIC TUBING (EMT) MAXIMUM SEISMIC BRACE SPACINGS	VERTICAL FORCE Fpv = 0.375g (ASD)

TRADE SIZE	MAX WEIGHT PER FOOT (LBS/FT)	MAX GRAVITY SUPPORT SPACING (FT)	MAX TRANSVERSE BRACE SPACING BASED ON TRADE SIZE AND g FORCE (FT)						
			g FORCE						
			0.25	0.375	0.5	0.625	0.75	0.875	1
3	8.26	10	45	41	38	36	35	33	31
3.5	10.98	10	48	44	41	39	37	35	33
4	13.64	10	50	45	42	40	38	36	34

NOTES:

1. **MAXIMUM BRACE SPACING IS BASED ON ASCE 7-10 SECTION 13.6.8, NOTE b, 70 PERCENT OF THE MATERIAL MINIMUM SPECIFIED TENSILE STRENGTH FOR STEEL TUBING.**
2. **EMT CONSIDERED FULL OF CONDUCTORS WHEN DETERMINING WEIGHT (REFER TO APPENDIX).**
3. **FOR LONGITUDINAL AND ALL-DIRECTIONAL BRACE SPACING, MULTIPLY THE TABULATED VALUES BY 3. BRACE AND OR CONNECTION CAPACITY MAY GOVERN MAXIMUM SPACING IN SOME CASES.**
4. **BRACE SPACINGS ARE BASED ON EMT STEEL TUBING CONSTRUCTED TO UL-797 OR ANSI C-80.3 WITH A MINIMUM YIELD STRENGTH OF 30,000 PSI.**
5. **COUPLINGS FOR UP TO 2½" EMT TO MEET PROJECT SPECIFICATIONS. HOWEVER, COMPRESSION COUPLINGS OR COUPLINGS WITH MIN. (2) SCREWS AT EACH END; e.g., CONDUIT CAN BE PUSHED INTO COUPLING ≈ 2" AND SET WITH MIN. (2) SCREWS, SHALL BE USED FOR 3", 3½", AND 4" EMT.**

REVIEWED FOR CODE COMPLIANCE
HCAI
OPM-0043
Reviewed by: William Staehlin
DATE: 01/23/2023
CALIFORNIA BUILDING CODE, 2022

MASON WEST
1601 E. Miraloma Ave. Placentia, CA 92870
TEL (714) 630 - 0701, www.masonwest.com

Jiefu "Jeff" Zhang, SE
California SE No. S5270

PAGE
S2.0

CONDUIT	INTERMEDIATE METAL CONDUIT (IMC) MAXIMUM SEISMIC BRACE SPACINGS	VERTICAL FORCE Fpv = 0.375g (ASD)

TRADE SIZE	MAX WEIGHT PER FOOT (LBS/FT)	MAX GRAVITY SUPPORT SPACING (FT)	MAX TRANSVERSE BRACE SPACING BASED ON TRADE SIZE AND g FORCE (FT)						
			g FORCE						
			0.25	0.375	0.5	0.625	0.75	0.875	1
3	10.69	20	50	45	42	40	38	35	33
3.5	13.46	20	52	47	44	42	40	37	34
4	16.32	20	55	49	46	44	41	38	36

NOTES:

1. MAXIMUM BRACE SPACING IS BASED ON ASCE 7-10 SECTION 13.6.8, NOTE b, 70 PERCENT OF THE MATERIAL MINIMUM SPECIFIED TENSILE STRENGTH FOR STEEL TUBING WITH THREADED CONNECTIONS.
2. IMC CONSIDERED FULL OF CONDUCTORS WHEN DETERMINING WEIGHT (REFER TO APPENDIX).
3. FOR LONGITUDINAL AND ALL-DIRECTIONAL BRACE SPACING, MULTIPLY THE TABULATED VALUES BY 3. BRACE AND OR CONNECTION CAPACITY MAY GOVERN MAXIMUM SPACING IN SOME CASES.
4. BRACE SPACINGS ARE BASED ON IMC STEEL TUBING CONSTRUCTED TO UL-1242 OR ANSI C-80.6 WITH A MINIMUM YIELD STRENGTH OF 30,000 PSI.
5. COUPLINGS CONNECTING IMC SEGMENTS SHALL BE DESIGNED OR TESTED TO ACCEPT SEISMIC LOADS, WHEN THREADED COUPLINGS ARE NOT USED, AND MAY LIMIT THE BRACE SPACINGS TO MANUFACTURER'S RATINGS. MANUFACTURER'S RATINGS MUST BE BASED ON REVIEWED CAPACITIES AND APPROVED BY OSHPD.
6. RIGID GROOVED COUPLINGS LISTED FOR UL STANDARD 213 MAY USE LISTED MAXIMUM BRACE SPACINGS.

REVIEWED FOR CODE COMPLIANCE
HCAi
OPM-0043
BY: William Staehlin
DATE: 01/23/2023
CALIFORNIA BUILDING CODE, 2022

MASON WEST
1601 E. Miraloma Ave. Placentia, CA 92870
TEL (714) 630 - 0701, www.masonwest.com

Jiefu "Jeff" Zhang, SE
California SE No. S5270

PAGE
S2.1

CONDUIT	RIGID METAL CONDUIT (RMC) MAXIMUM SEISMIC BRACE SPACINGS	VERTICAL FORCE Fpv = 0.375g (ASD)

TRADE SIZE	MAX WEIGHT PER FOOT (LBS/FT)	MAX GRAVITY SUPPORT SPACING (FT)	MAX TRANSVERSE BRACE SPACING BASED ON TRADE SIZE AND g FORCE (FT)						
			g FORCE						
			0.25	0.375	0.5	0.625	0.75	0.875	1
3	12.59	20	52	47	43	41	39	38	36
3.5	16.04	20	55	49	46	43	41	40	38
4	19.67	20	57	52	48	46	44	42	40
5	28.76	20	63	57	53	50	48	46	44
6	40.03	20	68	61	57	54	51	49	48

NOTES:

1. MAXIMUM BRACE SPACING IS BASED ON ASCE 7-10 SECTION 13.6.8, NOTE b, 70 PERCENT OF THE MATERIAL MINIMUM SPECIFIED TENSILE STRENGTH FOR STEEL TUBING WITH THREADED CONNECTIONS.
2. RMC CONSIDERED FULL OF CONDUCTORS WHEN DETERMINING WEIGHT (REFER TO APPENDIX).
3. FOR LONGITUDINAL AND ALL-DIRECTIONAL BRACE SPACING, MULTIPLY THE TABULATED VALUES BY 3. BRACE AND OR CONNECTION CAPACITY MAY GOVERN MAXIMUM SPACING IN SOME CASES.
4. BRACE SPACINGS ARE BASED ON RMC STEEL TUBING CONSTRUCTED TO UL-6 OR ANSI C-80.1 WITH A MINIMUM YIELD STRENGTH OF 30,000 PSI.
5. COUPLINGS CONNECTING RMC SEGMENTS SHALL BE DESIGNED OR TESTED TO ACCEPT SEISMIC LOADS, WHEN THREADED COUPLINGS ARE NOT USED, AND MAY LIMIT THE BRACE SPACINGS TO MANUFACTURER'S RATINGS. MANUFACTURER'S RATINGS MUST BE BASED ON REVIEWED CAPACITIES AND APPROVED BY OSHPD.
6. RIGID GROOVED COUPLINGS LISTED FOR UL STANDARD 213 MAY USE LISTED MAXIMUM BRACE SPACINGS.

REVIEWED FOR CODE COMPLIANCE
OPM-0043
BY: William Staehlin
DATE: 01/23/2023
CALIFORNIA BUILDING CODE, 2022

MASON WEST
1601 E. Miraloma Ave. Placentia, CA 92870
TEL (714) 630 - 0701, www.masonwest.com

Jiefu "Jeff" Zhang, SE
California SE No. S5270

PAGE
S2.2

PIPE	STEEL PIPE (STANDARD SCHEDULE) WATER FILLED WITH INSULATION MAXIMUM MW-SSC SPACINGS	VERTICAL FORCE Fpv = 0.375g (ASD)

MAX PIPE CLAMP SPACING (TOP OF TRAPEZE INSTALLATION)

PART #	NPS	PIPE SCHEDULE	MAX WEIGHT PER FOOT (LBS/FT)	MAX GRAVITY SUPPORT SPACING (FT)	MAX TRANSVERSE SPACING (FT) g FORCE							MAX LONGITUDINAL SPACING (FT) g FORCE						
					0.25	0.375	0.5	0.625	0.75	0.875	1	0.25	0.375	0.5	0.625	0.75	0.875	1
SSC-13	1 1/4	40	3.8	7	35	32	30	28	26	25	24	106	96	89	83	77	66	58
SSC-15	1 1/2	40	4.5	9	38	35	32	30	29	27	26	115	95	71	57	47	41	36
SSC-20	2	40	6.2	10	43	39	36	34	32	31	30	128	116	108	102	86	74	65
SSC-25	2 1/2	40	9.1	10	48	43	40	38	36	35	34	143	129	97	77	64	55	48
SSC-30	3	40	12.1	10	53	48	44	42	40	37	32	152	101	76	61	51	43	38
SSC-40	4	40	18.3	10	59	53	50	44	36	31	27	72	48	36	29	24	21	18
SSC-50	5	40	26.6	10	65	59	54	46	39	33	29	87	58	44	35	29	25	22
SSC-60	6	40	34.8	10	40	27	20	16	13	11	10	52	34	26	21	17	15	13
SSC-80	8	40	55.1	10	25	17	13	10	8	7	6	32	21	16	13	11	9	8

MAX PIPE CLAMP SPACING (BOTTOM OF TRAPEZE INSTALLATION)

PART #	NPS	PIPE SCHEDULE	MAX WEIGHT PER FOOT (LBS/FT)	MAX GRAVITY SUPPORT SPACING (FT)	MAX TRANSVERSE SPACING (FT) g FORCE							MAX LONGITUDINAL SPACING (FT) g FORCE						
					0.25	0.375	0.5	0.625	0.75	0.875	1	0.25	0.375	0.5	0.625	0.75	0.875	1
SSC-13	1 1/4	40	3.8	7	35	32	30	28	26	25	24	106	96	89	83	74	63	55
SSC-15	1 1/2	40	4.5	9	38	35	32	30	29	27	26	115	89	67	53	44	38	33
SSC-20	2	40	6.2	10	43	39	36	34	32	31	30	128	116	108	98	82	70	61
SSC-25		40	9.1	10	48	43	40	38	36	35	33	143	120	90	72	60	51	45
SSC-30	2 1/2	40	12.1	10	53	48	44	42	40	34	30	142	95	71	57	47	41	36
SSC-40	4	40	18.3	10	59	53	50	40	34	29	25	66	44	33	26	22	19	16
SSC-50	5	40	26.6	10	65	59	52	42	35	30	26	78	52	39	31	26	22	20
SSC-60	6	40	34.8	10	34	23	17	14	11	10	9	43	28	21	17	14	12	11

REVIEWED FOR CODE COMPLIANCE
HCAi
OPM-0043
BY: William Staehlin
DATE: 01/23/2023
CALIFORNIA BUILDING CODE 2022

NOTES:

1. MAXIMUM MW-SSC SPACINGS ARE THE MINIMUMS OF VALUES TAKEN FROM S1.0 AND MW-SSC CAPACITIES FOR THEIR RESPECTIVE PIPE SIZE AND g FORCE.
2. BRACE CAPACITY MAY GOVERN MAXIMUM SPACING IN SOME CASES.
3. REF. X8.0-X8.0.1 FOR MW-SSC DATA.
4. FOR MULTIPLE PIPES SUPPORTED ON A TRAPEZE, REFER TO PAGE A10.6, NOTE 3.

MASON WEST
1601 E. Miraloma Ave. Placentia, CA 92870
TEL (714) 630 - 0701, www.masonwest.com

Jiefu "Jeff" Zhang, SE
California SE No. S5270

PAGE
S3.0

PIPE	COPPER PIPE TYPE L - DRAWN W/ SOLDERED JOINTS MAX MW-SCC/SCCI SPACINGS	VERTICAL FORCE Fpv = 0.375g (ASD)

PIPE W/WATER AND INSULATION

MAX PIPE CLAMP SPACING (TOP OF TRAPEZE INSTALLATION)

PART #	NPS	MAX WEIGHT PER FOOT (LBS/FT)	MAX GRAVITY SUPPORT SPACING (FT)	MAX TRANSVERSE SPACING (FT) g FORCE							MAX LONGITUDINAL SPACING (FT) (MW-SCC-XX ONLY) g FORCE						
				0.25	0.375	0.5	0.625	0.75	0.875	1	0.25	0.375	0.5	0.625	0.75	0.875	1
SCC-13/SCCI-X13	1 1/4	2.30	7	24	20	17	16	14	13	12	71	60	52	47	43	39	37
SCC-15/SCCI-X15	1 1/2	2.80	8	26	22	19	17	15	14	13	79	65	56	50	46	42	40
SCC-20/SCCI-X20	2	4.20	8	31	25	22	20	18	17	16	93	76	66	59	54	50	47
SCC-25/SCCI-X25	2 1/2	5.80	9	34	28	24	21	20	18	17	102	83	69	55	46	39	34
SCC-30/SCCI-X30	3	7.60	10	36	30	26	23	21	19	18	109	89	74	59	49	42	37
SCC-40/SCCI-X40	4	12.4	10	44	36	31	28	25	24	21	116	77	58	46	39	33	29
SCC-50/SCCI-X50	5	18.6	10	45	37	32	26	22	18	16	65	43	32	26	22	18	16
SCC-60/SCCI-X60	6	25.1	10	49	38	29	23	19	16	14	57	38	29	23	19	16	14

PIPE ONLY (GAS)

MAX PIPE CLAMP SPACING (TOP OF TRAPEZE INSTALLATION)

PART #	NPS	MAX WEIGHT PER FOOT (LBS/FT)	MAX GRAVITY SUPPORT SPACING (FT)	MAX TRANSVERSE SPACING (FT) g FORCE							MAX LONGITUDINAL SPACING (FT) (MW-SCC-XX ONLY) g FORCE						
				0.25	0.375	0.5	0.625	0.75	0.875	1	0.25	0.375	0.5	0.625	0.75	0.875	1
SCC-13/SCCI-X13	1 1/4	0.88	9	32	28	26	24	23	21	20	95	85	77	72	68	64	61
SCC-15/SCCI-X15	1 1/2	1.14	10	35	31	29	27	25	24	23	104	94	87	80	76	72	68
SCC-20/SCCI-X20	2	1.75	10	40	36	33	32	30	27	26	119	108	100	95	89	82	77
SCC-25/SCCI-X25	2 1/2	2.48	10	44	40	37	35	33	30	28	132	120	111	105	98	90	81
SCC-30/SCCI-X30	3	3.33	10	48	44	41	38	35	33	31	145	131	122	115	106	96	84
SCC-40/SCCI-X40	4	5.38	10	56	50	47	44	42	39	36	168	151	134	107	89	76	67
SCC-50/SCCI-X50	5	7.61	10	62	56	52	48	44	41	38	158	105	79	63	53	45	39
SCC-60/SCCI-X60	6	10.2	10	68	61	57	52	47	40	35	141	94	71	56	47	40	35

HCAi
OPM-0043
BY: William Staehlin
DATE: 1/23/2023
REVIEWED FOR CODE COMPLIANCE
CALIFORNIA BUILDING CODE 2022

NOTES:

1. MAXIMUM MW-SCC/SCCI SPACINGS ARE THE MINIMUMS OF VALUES TAKEN FROM S1.2.1, MW-SCC CAPACITIES AND MW-SCCI CAPACITIES FOR THEIR RESPECTIVE PIPE SIZE AND g FORCE.
2. BRACE CAPACITY MAY GOVERN MAXIMUM SPACING IN SOME CASES.
3. REF. X8.1-X8.1.1 FOR MW-SCC DATA AND X8.6-X8.6.3 FOR MW-SCCI DATA.
4. FOR MULTIPLE PIPES SUPPORTED ON A TRAPEZE, REFER TO PAGE A10.6, NOTE 3.
5. MW-SCCI MAY ONLY BE USED FOR TRANSVERSE LOCATIONS.

MASON WEST
1601 E. Miraloma Ave. Placentia, CA 92870
TEL (714) 630 - 0701, www.masonwest.com

Jiefu "Jeff" Zhang, SE
California SE No. S5270

PAGE
S3.1

PIPE	COPPER PIPE TYPE L - ANNEALED MAX MW-SCC/SCCI SPACINGS	VERTICAL FORCE Fpv = 0.375g (ASD)

PIPE W/WATER AND INSULATION

MAX PIPE CLAMP SPACING (TOP OF TRAPEZE INSTALLATION)

PART #	NPS	MAX WEIGHT PER FOOT (LBS/FT)	MAX GRAVITY SUPPORT SPACING (FT)	MAX TRANSVERSE SPACING (FT) g FORCE							MAX LONGITUDINAL SPACING (FT) (MW-SCC-XX ONLY) g FORCE						
				0.25	0.375	0.5	0.625	0.75	0.875	1	0.25	0.375	0.5	0.625	0.75	0.875	1
SCC-13/SCCI-X13	1 1/4	2.30	7	11	9	8	7	6	6	6	34	28	24	21	19	18	17
SCC-15/SCCI-X15	1 1/2	2.80	8	11	9	8	7	6	6	6	33	27	23	21	19	18	17
SCC-20/SCCI-X20	2	4.20	8	15	13	11	10	9	8	8	46	38	33	29	27	25	23
SCC-25/SCCI-X25	2 1/2	5.80	9	16	13	12	10	9	9	8	49	40	35	31	28	26	25
SCC-30/SCCI-X30	3	7.60	10	17	14	12	11	10	9	9	51	42	36	32	29	27	26
SCC-40/SCCI-X40	4	12.4	10	24	19	17	15	14	13	12	71	58	50	45	39	33	29
SCC-50/SCCI-X50	5	18.6	10	25	20	17	16	14	13	12	65	43	32	26	22	18	16
SCC-60/SCCI-X60	6	25.1	10	27	22	19	17	16	15	14	57	38	29	23	19	16	14

PIPE ONLY (GAS)

MAX PIPE CLAMP SPACING (TOP OF TRAPEZE INSTALLATION)

PART #	NPS	MAX WEIGHT PER FOOT (LBS/FT)	MAX GRAVITY SUPPORT SPACING (FT)	MAX TRANSVERSE SPACING (FT) g FORCE							MAX LONGITUDINAL SPACING (FT) (MW-SCC-XX ONLY) g FORCE						
				0.25	0.375	0.5	0.625	0.75	0.875	1	0.25	0.375	0.5	0.625	0.75	0.875	1
SCC-13/SCCI-X13	1 1/4	0.88	9	24	20	17	15	14	13	12	73	59	51	46	42	39	36
SCC-15/SCCI-X15	1 1/2	1.14	10	25	20	18	16	14	13	12	74	61	53	47	43	40	37
SCC-20/SCCI-X20	2	1.75	10	29	24	21	19	17	16	15	88	72	63	56	51	47	44
SCC-25/SCCI-X25	2 1/2	2.48	10	33	27	24	21	19	18	17	100	82	71	63	58	54	50
SCC-30/SCCI-X30	3	3.33	10	37	30	26	23	21	20	18	111	91	78	70	64	59	55
SCC-40/SCCI-X40	4	5.38	10	45	37	32	28	26	24	22	134	110	95	85	78	72	67
SCC-50/SCCI-X50	5	7.61	10	48	39	34	30	27	25	24	143	105	79	63	53	45	39
SCC-60/SCCI-X60	6	10.2	10	52	42	36	33	30	28	26	141	94	71	56	47	40	35

REVIEWED FOR CODE COMPLIANCE
HCAi
OPM-0043
BY: William Staehlin
DATE: 1/23/2023
CALIFORNIA BUILDING CODE

NOTES:

1. MAXIMUM MW-SCC/SCCI SPACINGS ARE THE MINIMUMS OF VALUES TAKEN FROM S1.2.1, MW-SCC CAPACITIES AND MW-SCCI CAPACITIES FOR THEIR RESPECTIVE PIPE SIZE AND g FORCE.
2. BRACE CAPACITY MAY GOVERN MAXIMUM SPACING IN SOME CASES.
3. REF. X8.1-X8.1.1 FOR MW-SCC DATA AND X8.6-X8.6.3 FOR MW-SCCI DATA.
4. FOR MULTIPLE PIPES SUPPORTED ON A TRAPEZE, REFER TO PAGE A10.6, NOTE 3.
5. MW-SCCI MAY ONLY BE USED FOR TRANSVERSE LOCATIONS.

MASON WEST
1601 E. Miraloma Ave. Placentia, CA 92870
TEL (714) 630 - 0701, www.masonwest.com

Jiefu "Jeff" Zhang, SE
California SE No. S5270

PAGE
S3.1.1

PIPE	COPPER PIPE TYPE K - DRAWN W/ SOLDERED JOINTS MAX MW-SCC/SCCI SPACINGS	VERTICAL FORCE Fpv = 0.375g (ASD)

PIPE W/WATER AND INSULATION

MAX PIPE CLAMP SPACING (TOP OF TRAPEZE INSTALLATION)

PART #	NPS	MAX WEIGHT PER FOOT (LBS/FT)	MAX GRAVITY SUPPORT SPACING (FT)	MAX TRANSVERSE SPACING (FT) g FORCE							MAX LONGITUDINAL SPACING (FT) (MW-SCC-XX ONLY) g FORCE						
				0.25	0.375	0.5	0.625	0.75	0.875	1	0.25	0.375	0.5	0.625	0.75	0.875	1
SCC-13/SCCI-X13	1 1/4	2.30	7	25	22	20	18	17	16	15	74	65	59	55	51	47	44
SCC-15/SCCI-X15	1 1/2	2.80	8	28	25	23	21	19	17	16	85	74	68	62	56	52	49
SCC-20/SCCI-X20	2	4.20	8	33	30	26	24	22	20	19	99	90	79	71	65	60	56
SCC-25/SCCI-X25	2 1/2	5.80	9	37	33	29	26	24	22	20	111	92	69	55	46	39	34
SCC-30/SCCI-X30	3	7.60	10	41	37	32	28	25	22	19	123	98	74	59	49	42	37
SCC-40/SCCI-X40	4	12.4	10	47	42	37	33	27	24	21	116	77	58	46	39	33	29
SCC-50/SCCI-X50	5	18.6	10	52	43	32	26	22	18	16	65	43	32	26	22	18	16
SCC-60/SCCI-X60	6	25.1	10	57	38	29	23	19	16	14	57	38	29	23	19	16	14

PIPE ONLY (GAS)

MAX PIPE CLAMP SPACING (TOP OF TRAPEZE INSTALLATION)

PART #	NPS	MAX WEIGHT PER FOOT (LBS/FT)	MAX GRAVITY SUPPORT SPACING (FT)	MAX TRANSVERSE SPACING (FT) g FORCE							MAX LONGITUDINAL SPACING (FT) (MW-SCC-XX ONLY) g FORCE						
				0.25	0.375	0.5	0.625	0.75	0.875	1	0.25	0.375	0.5	0.625	0.75	0.875	1
SCC-13/SCCI-X13	1 1/4	1.04	9	32	28	26	24	22	21	20	95	84	77	71	67	64	61
SCC-15/SCCI-X15	1 1/2	1.36	10	34	31	29	27	25	24	23	103	93	86	80	75	71	68
SCC-20/SCCI-X20	2	2.06	10	40	36	33	31	30	29	27	119	107	100	94	90	86	82
SCC-25/SCCI-X25	2 1/2	2.93	10	44	40	37	35	33	32	30	132	119	111	105	91	78	68
SCC-30/SCCI-X30	3	4.00	10	48	43	40	48	37	35	33	144	130	121	112	93	80	70
SCC-40/SCCI-X40	4	6.51	10	55	50	46	44	42	40	38	166	147	111	88	74	63	55
SCC-50/SCCI-X50	5	9.67	10	62	56	52	49	41	35	31	124	83	62	50	41	35	31
SCC-60/SCCI-X60	6	13.9	10	67	61	52	41	35	30	26	104	69	52	41	35	30	26

REVIEWED FOR CODE COMPLIANCE
CALIFORNIA BUILDING CODE 2022
HCAi
OPM-0043
BY: William Staehlin
DATE: 01/23/2023

NOTES:

1. MAXIMUM MW-SCC/SCCI SPACINGS ARE THE MINIMUMS OF VALUES TAKEN FROM S1.2.1, MW-SCC CAPACITIES AND MW-SCCI CAPACITIES FOR THEIR RESPECTIVE PIPE SIZE AND g FORCE.
2. BRACE CAPACITY MAY GOVERN MAXIMUM SPACING IN SOME CASES.
3. REF. X8.1-X8.1.1 FOR MW-SCC DATA AND X8.6-X8.6.3 FOR MW-SCCI DATA.
4. FOR MULTIPLE PIPES SUPPORTED ON A TRAPEZE, REFER TO PAGE A10.6, NOTE 3.
5. MW-SCCI MAY ONLY BE USED FOR TRANSVERSE LOCATIONS.

MASON WEST
1601 E. Miraloma Ave. Placentia, CA 92870
TEL (714) 630 - 0701, www.masonwest.com

Jiefu "Jeff" Zhang, SE
California SE No. S5270

PAGE
S3.2

PIPE	COPPER PIPE TYPE K - ANNEALED MAX MW-SCC/SCCI SPACINGS	VERTICAL FORCE Fpv = 0.375g (ASD)

PIPE W/WATER AND INSULATION

MAX PIPE CLAMP SPACING (TOP OF TRAPEZE INSTALLATION)

PART #	NPS	MAX WEIGHT PER FOOT (LBS/FT)	MAX GRAVITY SUPPORT SPACING (FT)	MAX TRANSVERSE SPACING (FT) g FORCE							MAX LONGITUDINAL SPACING (FT) (MW-SCC-XX ONLY) g FORCE						
				0.25	0.375	0.5	0.625	0.75	0.875	1	0.25	0.375	0.5	0.625	0.75	0.875	1
SCC-13/SCCI-X13	1 1/4	2.30	7	16	13	11	10	9	8	8	48	39	34	30	27	25	24
SCC-15/SCCI-X15	1 1/2	2.80	8	17	14	12	11	10	9	9	51	42	36	32	29	27	26
SCC-20/SCCI-X20	2	4.20	8	21	17	15	13	12	11	10	63	51	44	40	36	33	31
SCC-25/SCCI-X25	2 1/2	5.80	9	23	18	16	14	13	12	11	68	55	48	43	39	36	34
SCC-30/SCCI-X30	3	7.60	10	25	20	17	16	14	13	12	74	60	52	47	43	40	37
SCC-40/SCCI-X40	4	12.4	10	30	25	21	19	17	16	15	91	74	58	46	39	33	29
SCC-50/SCCI-X50	5	18.6	10	35	28	25	22	20	18	16	65	43	32	26	22	18	16
SCC-60/SCCI-X60	6	25.1	10	41	34	29	23	19	16	14	57	38	29	23	19	16	14

PIPE ONLY (GAS)

MAX PIPE CLAMP SPACING (TOP OF TRAPEZE INSTALLATION)

PART #	NPS	MAX WEIGHT PER FOOT (LBS/FT)	MAX GRAVITY SUPPORT SPACING (FT)	MAX TRANSVERSE SPACING (FT) g FORCE							MAX LONGITUDINAL SPACING (FT) (MW-SCC-XX ONLY) g FORCE						
				0.25	0.375	0.5	0.625	0.75	0.875	1	0.25	0.375	0.5	0.625	0.75	0.875	1
SCC-13/SCCI-X13	1 1/4	1.04	9	27	22	19	17	15	14	13	80	65	56	50	46	43	40
SCC-15/SCCI-X15	1 1/2	1.36	10	28	23	20	18	16	15	14	83	68	59	53	48	45	42
SCC-20/SCCI-X20	2	2.06	10	32	27	23	21	19	17	16	97	80	69	62	56	52	49
SCC-25/SCCI-X25	2 1/2	2.93	10	37	30	26	23	21	20	18	110	90	78	69	63	59	55
SCC-30/SCCI-X30	3	4.00	10	41	33	29	26	23	22	20	122	100	86	77	70	65	61
SCC-40/SCCI-X40	4	6.51	10	47	39	33	30	27	25	24	142	116	100	88	74	63	55
SCC-50/SCCI-X50	5	9.67	10	53	43	38	34	31	28	27	124	83	62	50	41	35	31
SCC-60/SCCI-X60	6	13.9	10	59	48	42	37	34	30	26	104	69	52	41	35	30	26

REVIEWED FOR CODE COMPLIANCE
HCAi
OPM-0043
BY: William Staehlin
DATE: 01/23/2023
CALIFORNIA BUILDING CODE 2022

NOTES:

1. MAXIMUM MW-SCC/SCCI SPACINGS ARE THE MINIMUMS OF VALUES TAKEN FROM S1.2.1, MW-SCC CAPACITIES AND MW-SCCI CAPACITIES FOR THEIR RESPECTIVE PIPE SIZE AND g FORCE.
2. BRACE CAPACITY MAY GOVERN MAXIMUM SPACING IN SOME CASES.
3. REF. X8.1-X8.1.1 FOR MW-SCC DATA AND X8.6-X8.6.3 FOR MW-SCCI DATA.
4. FOR MULTIPLE PIPES SUPPORTED ON A TRAPEZE, REFER TO PAGE A10.6, NOTE 3.
5. MW-SCCI MAY ONLY BE USED FOR TRANSVERSE LOCATIONS.

MASON WEST
1601 E. Miraloma Ave. Placentia, CA 92870
TEL (714) 630 - 0701, www.masonwest.com

Jiefu "Jeff" Zhang, SE
California SE No. S5270

PAGE
S3.2.1

CONDUIT	ELECTRICAL METALLIC TUBING (EMT) MAXIMUM MW-SSC/SSCE SPACINGS	VERTICAL FORCE Fpv = 0.375g (ASD)

MAX PIPE CLAMP SPACING (TOP OF TRAPEZE INSTALLATION)

PART #	NPS	MAX WEIGHT PER FOOT (LBS/FT)	MAX GRAVITY SUPPORT SPACING (FT)	MAX TRANSVERSE SPACING (FT) g FORCE							MAX LONGITUDINAL SPACING (FT) g FORCE						
				0.25	0.375	0.5	0.625	0.75	0.875	1	0.25	0.375	0.5	0.625	0.75	0.875	1
SSC-30	3	8.26	10	45	41	38	36	35	32	28	135	123	92	74	61	53	46
SSC-40	4	13.64	10	50	45	41	33	27	23	21	126	84	63	50	42	36	32

MAX PIPE CLAMP SPACING (BOTTOM OF TRAPEZE INSTALLATION)

PART #	NPS	MAX WEIGHT PER FOOT (LBS/FT)	MAX GRAVITY SUPPORT SPACING (FT)	MAX TRANSVERSE SPACING (FT) g FORCE							MAX LONGITUDINAL SPACING (FT) g FORCE						
				0.25	0.375	0.5	0.625	0.75	0.875	1	0.25	0.375	0.5	0.625	0.75	0.875	1
SSC-30	3	8.26	10	45	41	38	36	35	30	27	135	119	90	72	60	51	45
SSC-40	4	13.64	10	50	45	40	32	26	23	20	117	78	59	47	39	34	29

REVIEWED FOR CODE COMPLIANCE
HCAi
BY: William Staehlin
DATE: 01/23/2023
CALIFORNIA BUILDING CODE, 2022

NOTES:

1. MAXIMUM MW-SSCE SPACINGS ARE THE MINIMUMS OF VALUES TAKEN FROM S2.0 AND MW-SSCE CAPACITIES FOR THEIR RESPECTIVE PIPE SIZE AND g FORCE.
2. BRACE CAPACITY MAY GOVERN MAXIMUM SPACING IN SOME CASES.
3. REF. X8.0-X8.0.1 FOR MW-SSCE DATA.
4. FOR MULTIPLE CONDUITS SUPPORTED ON A TRAPEZE, REFER TO PAGE A20.5, NOTE 3.

MASON WEST
1601 E. Miraloma Ave. Placentia, CA 92870
TEL (714) 630 - 0701, www.masonwest.com

Jiefu "Jeff" Zhang, SE
California SE No. S5270

PAGE
S4.0

CONDUIT	IMTERMEDIATE METAL CONDUIT (IMC) MAXIMUM MW-SSC/SSCE SPACINGS	VERTICAL FORCE Fpv = 0.375g (ASD)

MAX PIPE CLAMP SPACING (TOP OF TRAPEZE INSTALLATION)

PART #	NPS	MAX WEIGHT PER FOOT (LBS/FT)	MAX GRAVITY SUPPORT SPACING (FT)	MAX TRANSVERSE SPACING (FT) g FORCE							MAX LONGITUDINAL SPACING (FT) g FORCE						
				0.25	0.375	0.5	0.625	0.75	0.875	1	0.25	0.375	0.5	0.625	0.75	0.875	1
SSC-30	3	10.69	10	50	45	42	34	29	25	22	142	95	71	57	47	41	36
SSC-40	4	16.32	10	55	46	34	27	23	20	17	105	70	53	42	35	30	26

MAX PIPE CLAMP SPACING (BOTTOM OF TRAPEZE INSTALLATION)

PART #	NPS	MAX WEIGHT PER FOOT (LBS/FT)	MAX GRAVITY SUPPORT SPACING (FT)	MAX TRANSVERSE SPACING (FT) g FORCE							MAX LONGITUDINAL SPACING (FT) g FORCE						
				0.25	0.375	0.5	0.625	0.75	0.875	1	0.25	0.375	0.5	0.625	0.75	0.875	1
SSC-30	3	10.69	10	50	45	41	33	27	24	21	135	90	67	54	45	38	34
SSC-40	4	16.32	10	55	42	32	25	21	18	16	98	65	49	39	33	28	25

REVIEWED FOR CODE COMPLIANCE
HCAi
BY: William Staehlin
DATE: 01/23/2023
CALIFORNIA BUILDING CODE, 2022

NOTES:

1. MAXIMUM MW-SSCE SPACINGS ARE THE MINIMUMS OF VALUES TAKEN FROM S2.1 AND MW-SSCE CAPACITIES FOR THEIR RESPECTIVE PIPE SIZE AND g FORCE.
2. BRACE CAPACITY MAY GOVERN MAXIMUM SPACING IN SOME CASES.
3. REF. X8.0-X8.0.1 FOR MW-SSCE DATA.
4. FOR MULTIPLE CONDUITS SUPPORTED ON A TRAPEZE, REFER TO PAGE A20.5, NOTE 3.

MASON WEST
1601 E. Miraloma Ave. Placentia, CA 92870
TEL (714) 630 - 0701, www.masonwest.com

Jiefu "Jeff" Zhang, SE
California SE No. S5270

PAGE
S4.1

CONDUIT	RIGID METAL CONDUIT (RMC) MAXIMUM MW-SSC SPACINGS	VERTICAL FORCE Fpv = 0.375g (ASD)

MAX PIPE CLAMP SPACING (TOP OF TRAPEZE INSTALLATION)

PART #	NPS	MAX WEIGHT PER FOOT (LBS/FT)	MAX GRAVITY SUPPORT SPACING (FT)	MAX TRANSVERSE SPACING (FT)							MAX LONGITUDINAL SPACING (FT)						
				g FORCE							g FORCE						
				0.25	0.375	0.5	0.625	0.75	0.875	1	0.25	0.375	0.5	0.625	0.75	0.875	1
SSC-30	3	12.59	10	52	47	43	41	39	35	31	146	97	73	58	49	42	37
SSC-40	4	19.67	10	57	52	48	41	34	29	25	67	45	34	27	22	19	17
SSC-50	5	28.76	10	63	57	53	43	36	31	27	81	54	40	32	27	23	20
SSC-60	6	40.03	10	35	23	17	14	12	10	9	45	30	22	18	15	13	11

MAX PIPE CLAMP SPACING (BOTTOM OF TRAPEZE INSTALLATION)

PART #	NPS	MAX WEIGHT PER FOOT (LBS/FT)	MAX GRAVITY SUPPORT SPACING (FT)	MAX TRANSVERSE SPACING (FT)							MAX LONGITUDINAL SPACING (FT)						
				g FORCE							g FORCE						
				0.25	0.375	0.5	0.625	0.75	0.875	1	0.25	0.375	0.5	0.625	0.75	0.875	1
SSC-30	3	12.59	10	52	47	43	41	38	33	29	137	91	68	55	46	39	34
SSC-40	4	19.67	10	57	52	47	37	31	27	23	61	41	31	24	20	17	15
SSC-50	5	28.76	10	63	57	48	38	32	27	24	72	48	36	29	24	21	18
SSC-60	6	40.03	10	29	19	14	12	10	8	7	36	24	18	14	12	10	9

REVIEWED FOR CODE COMPLIANCE
HCAI
OPM-0043
Reviewed by William Staehlin
DATE: 01/23/2023
CALIFORNIA BUILDING CODE, 2022

NOTES:

1. MAXIMUM MW-SSC SPACINGS ARE THE MINIMUMS OF VALUES TAKEN FROM S2.2 AND MW-SSC CAPACITIES FOR THEIR RESPECTIVE PIPE SIZE AND g FORCE.
2. BRACE CAPACITY MAY GOVERN MAXIMUM SPACING IN SOME CASES.
3. REF. X8.0-X8.0.1 FOR MW-SSC DATA.
4. FOR MULTIPLE CONDUITS SUPPORTED ON A TRAPEZE, REFER TO PAGE A20.5, NOTE 3.

MASON WEST
1601 E. Miraloma Ave. Placentia, CA 92870
TEL (714) 630 - 0701, www.masonwest.com

Jiefu "Jeff" Zhang, SE
California SE No. S5270

PAGE
S4.2

DUCT	TRAPEZE SELECTION TABLES	VERTICAL FORCE Fpv = 0.375g (ASD)

Fpv = 0.375g DUCT SUPPORT AT 10'-0" MAX.		TRAPEZE SIZE DESIGNATION @ TRANSVERSE SEISMIC BRACE LOCATIONS				
		MAX TRAPEZE SPAN				
		36 IN	54 IN	72 IN	96 IN	120 IN
DUCT WEIGHT (LBS/FT)	10	A	A	A	B	B
	20	A	A	A	B	B
	30	B	B	B	B	B
	40	B	B	B	B	B
	50	B	B	B	B	D
	60	B	B	D	D	F
	70	D	D	D	F	F
	80	D	D	D	F	F
	90	D	D	D	F	F
	100	D	D	F	F	F

TRAPEZE MEMBER TABLE

		ALLOWABLE MOMENT CAPACITY (KIP-IN)									
		36" SPAN		54" SPAN		72" SPAN		96" SPAN		120" SPAN	
DESIGNATION	SIZE	Mcx	Mcy	Mcx	Mcy	Mcx	Mcy	Mcx	Mcy	Mcx	Mcy
A	13/16 x 1 5/8 x 12GA SINGLE STRUT	1.61	3.94	1.60	3.41	1.57	2.88	N/A	N/A	N/A	N/A
B	1 5/8 x 1 5/8 x 12GA SINGLE STRUT	4.76	6.57	4.23	6.38	3.84	5.95	3.45	5.40	3.12	4.85
D	1 5/8 x 3 1/4 x 12GA SINGLE STRUT	13.26	11.11	9.25	11.11	6.42	11.11	4.78	10.87	3.98	10.35
F	L3x3x1/4 (HSS2x2x1/4)	17.05	17.05	16.61	16.62	16.15	16.15	15.53	15.53	14.93	14.93
G	L4x4x1/4 (HSS2x2x1/4)	25.94	25.94	25.94	25.94	25.94	25.94	25.74	25.74	24.89	24.89

REVIEWED FOR CODE COMPLIANCE
OPM-0043
BY: William Staehlin
DATE: 01/23/2023
CALIFORNIA BUILDING CODE, 2022

NOTES:

1. REFER TO TABLE ABOVE FOR TRAPEZE MEMBER SIZE DESIGNATIONS & ALLOWABLE MOMENT CAPACITIES.
2. STEEL ANGLE MAY BE USED IN PLACE OF CHANNEL STRUT. FOR 1⅝"x1⅝"x12 GA SINGLE STRUT, USE L2½x2½x¼. FOR 1⅝"x3¼"x12 GA SINGLE STRUT, USE L3x3x¼. FOR 1⅝"x1⅝"x12 GA SINGLE STRUT CONTRACTOR MAY USE 1⅝x1 13/16x12GA DOUBLE STRUT AS A SUBSTITUTION.
3. TRAPEZE MEMBERS MAY BE PROVIDED WITH ROUND HOLES. REFER TO X7.0 AND X7.1 FOR STRUT MEMBER DATA.
4. MAXIMUM SPAN OF TRAPEZE MEMBER IS MEASURED BETWEEN CENTER OF HANGER RODS.
5. CONTRACTOR MAY USE ANY TRAPEZE MEMBER SIZE LARGER THAN IS TABULATED. FOR EXAMPLE, IF TRAPEZE MEMBER "A" IS THE MINIMUM REQUIREMENT, TRAPEZE MEMBER B, D, F, OR G CAN ALSO BE USED.
6. WHEN INCREASING DISTANCE FROM EDGE OF DUCT TO CENTER OF HANGER ROD MORE THAN 6", INCREASE THE WEIGHT PER FOOT BY A FACTOR OF INCREASED EDGE DISTANCE DIVIDED BY 6". FOR EXAMPLE, A 12" DUCT WEIGHING 9 LB/FT WITH AN EDGE DISTANCE OF 12" MUST INCREASE THE WEIGHT BY A FACTOR OF 2 (12"/6") TO USE THE ABOVE TABLE.
7. MAXIMUM TRANSVERSE DUCT BRACE SPACING IS 30 FEET.

MASON WEST
1601 E. Miraloma Ave. Placentia, CA 92870
TEL (714) 630 - 0701, www.masonwest.com

Jiefu "Jeff" Zhang, SE
California SE No. S5270

PAGE
T1.0

DUCT	TRAPEZE SELECTION TABLES	LATERAL FORCE Fp = 0.25g (ASD) VERTICAL FORCE Fpv = 0.375g (ASD)

Fp = 0.25g Fpv = 0.375g		TRAPEZE SIZE DESIGNATION @ ALL-DIRECTIONAL AND LONGITUDINAL SEISMIC BRACE LOCATIONS														
DUCT SUPPORT AT 10'-0" MAX.		LONG. & ALL-DIR. SEISMIC LOCATION SPACING 10 FT					LONG. & ALL-DIR. SEISMIC LOCATION SPACING 20 FT					LONG. & ALL-DIR. SEISMIC LOCATION SPACING 30 FT				
		MAX TRAPEZE SPAN					MAX TRAPEZE SPAN					MAX TRAPEZE SPAN				
		36 IN	54 IN	72 IN	96 IN	120 IN	36 IN	54 IN	72 IN	96 IN	120 IN	36 IN	54 IN	72 IN	96 IN	120 IN
DUCT WEIGHT (LBS/FT)	10	A	A	A	B	B	A	A	A	B	B	A	A	A	B	B
	20	A	A	A	B	B	A	A	A	B	B	A	A	A	B	B
	30	A	A	B	B	B	A	A	B	B	B	A	A	B	B	B
	40	A	B	B	B	B	A	B	B	B	B	A	B	B	B	B
	50	B	B	B	B	B	B	B	B	B	B	B	B	B	B	B
	60	B	B	B	B	B	B	B	B	B	B	B	B	B	B	B
	70	B	B	B	B	B	B	B	B	B	B	B	B	B	B	B
	80	B	B	B	B	B	B	B	B	B	B	B	B	B	B	B
	90	B	B	B	B	B	B	B	B	B	B	B	B	B	B	B
	100	B	B	B	B	D	B	B	B	B	D	B	B	B	B	D

Fp = 0.25g Fpv = 0.375g		TRAPEZE SIZE DESIGNATION @ ALL-DIRECTIONAL AND LONGITUDINAL SEISMIC BRACE LOCATIONS														
DUCT SUPPORT AT 10'-0" MAX.		LONG. & ALL-DIR. SEISMIC LOCATION SPACING 40 FT					LONG. & ALL-DIR. SEISMIC LOCATION SPACING 50 FT					LONG. & ALL-DIR. SEISMIC LOCATION SPACING 60 FT				
		MAX TRAPEZE SPAN					MAX TRAPEZE SPAN					MAX TRAPEZE SPAN				
		36 IN	54 IN	72 IN	96 IN	120 IN	36 IN	54 IN	72 IN	96 IN	120 IN	36 IN	54 IN	72 IN	96 IN	120 IN
DUCT WEIGHT (LBS/FT)	10	A	A	A	B	B	A	A	A	B	B	A	A	A	B	B
	20	A	A	A	B	B	A	A	A	B	B	A	A	A	B	B
	30	A	A	B	B	B	A	A	B	B	B	A	A	B	B	B
	40	A	B	B	B	B	A	B	B	B	B	A	B	B	B	B
	50	B	B	B	B	B	B	B	B	B	B	B	B	B	B	B
	60	B	B	B	B	B	B	B	B	B	B	B	B	B	B	B
	70	B	B	B	B	B	B	B	B	B	B	B	B	B	B	D
	80	B	B	B	B	B	B	B	B	B	D	B	B	D	D	D
	90	B	B	B	B	B	B	B	B	D	D	D	D	D	D	D
	100	B	B	B	B	D	B	B	D	D	D	D	D	D	D	D

REVIEWED FOR CODE COMPLIANCE
HCAI
OPM-0043
BY: William Staehlin
DATE: 01/23/2023
CALIFORNIA BUILDING CODE 2022

NOTES:

1. REFER TO PAGE T1.0 FOR TRAPEZE MEMBER SIZE DESIGNATIONS & ALLOWABLE MOMENT CAPACITIES.
2. STEEL ANGLE MAY BE USED IN PLACE OF CHANNEL STRUT. FOR 1⅝"x1⅝"x12 GA SINGLE STRUT, USE L2½x2½x¼. FOR 1⅝"x3¼"x12 GA SINGLE STRUT, USE L3x3x¼. FOR 1⅝"x1⅝"x12 GA SINGLE STRUT CONTRACTOR MAY USE 1⅝x1 13/16x12GA DOUBLE STRUT AS A SUBSTITUTION.
3. TRAPEZE MEMBERS MAY BE PROVIDED WITH ROUND HOLES. REFER TO X7.0 AND X7.1 FOR STRUT MEMBER DATA.
4. MAXIMUM SPAN OF TRAPEZE MEMBER IS MEASURED BETWEEN CENTER OF HANGER RODS.
5. CONTRACTOR MAY USE ANY TRAPEZE MEMBER SIZE LARGER THAN IS TABULATED. FOR EXAMPLE, IF TRAPEZE MEMBER "A" IS THE MINIMUM REQUIREMENT, TRAPEZE MEMBER B, D, F, OR G CAN ALSO BE USED.
6. WHEN INCREASING DISTANCE FROM EDGE OF DUCT TO CENTER OF HANGER ROD MORE THAN 6", INCREASE THE WEIGHT PER FOOT BY A FACTOR OF INCREASED EDGE DISTANCE DIVIDED BY 6". FOR EXAMPLE, A 12" DUCT WEIGHING 9 LB/FT WITH AN EDGE DISTANCE OF 12" MUST INCREASE THE WEIGHT BY A FACTOR OF 2 (12"/6") TO USE THE ABOVE TABLE.
7. MAXIMUM LONGITUDINAL DUCT BRACE SPACING IS 60 FEET.

MASON WEST
1601 E. Miraloma Ave. Placentia, CA 92870
TEL (714) 630 - 0701, www.masonwest.com

Jiefu "Jeff" Zhang, SE
California SE No. S5270

PAGE
T1.1

DUCT	TRAPEZE SELECTION TABLES	LATERAL FORCE Fp = 0.375g (ASD) VERTICAL FORCE Fpv = 0.375g (ASD)

Fp = 0.375g Fpv = 0.375g		TRAPEZE SIZE DESIGNATION @ ALL-DIRECTIONAL AND LONGITUDINAL SEISMIC BRACE LOCATIONS														
DUCT SUPPORT AT 10'-0" MAX.		LONG. & ALL-DIR. SEISMIC LOCATION SPACING 10 FT					LONG. & ALL-DIR. SEISMIC LOCATION SPACING 20 FT					LONG. & ALL-DIR. SEISMIC LOCATION SPACING 30 FT				
		MAX TRAPEZE SPAN					MAX TRAPEZE SPAN					MAX TRAPEZE SPAN				
		36 IN	54 IN	72 IN	96 IN	120 IN	36 IN	54 IN	72 IN	96 IN	120 IN	36 IN	54 IN	72 IN	96 IN	120 IN
DUCT WEIGHT (LBS/FT)	10	A	A	A	B	B	A	A	A	B	B	A	A	A	B	B
	20	A	A	A	B	B	A	A	A	B	B	A	A	A	B	B
	30	A	A	B	B	B	A	A	B	B	B	A	A	B	B	B
	40	A	B	B	B	B	A	B	B	B	B	A	B	B	B	B
	50	B	B	B	B	B	B	B	B	B	B	B	B	B	B	B
	60	B	B	B	B	B	B	B	B	B	B	B	B	B	B	B
	70	B	B	B	B	B	B	B	B	B	B	B	B	B	B	B
	80	B	B	B	B	B	B	B	B	B	B	B	B	B	B	B
	90	B	B	B	B	B	B	B	B	B	B	B	B	B	B	D
	100	B	B	B	B	D	B	B	B	B	D	B	B	B	D	D

Fp = 0.375g Fpv = 0.375g		TRAPEZE SIZE DESIGNATION @ ALL-DIRECTIONAL AND LONGITUDINAL SEISMIC BRACE LOCATIONS														
DUCT SUPPORT AT 10'-0" MAX.		LONG. & ALL-DIR. SEISMIC LOCATION SPACING 40 FT					LONG. & ALL-DIR. SEISMIC LOCATION SPACING 50 FT					LONG. & ALL-DIR. SEISMIC LOCATION SPACING 60 FT				
		MAX TRAPEZE SPAN					MAX TRAPEZE SPAN					MAX TRAPEZE SPAN				
		36 IN	54 IN	72 IN	96 IN	120 IN	36 IN	54 IN	72 IN	96 IN	120 IN	36 IN	54 IN	72 IN	96 IN	120 IN
DUCT WEIGHT (LBS/FT)	10	A	A	A	B	B	A	A	A	B	B	A	A	A	B	B
	20	A	A	A	B	B	A	A	A	B	B	A	A	A	B	B
	30	A	A	B	B	B	A	A	B	B	B	A	A	B	B	B
	40	A	B	B	B	B	A	B	B	B	B	B	B	B	B	B
	50	B	B	B	B	B	B	B	B	B	B	B	B	B	D	D
	60	B	B	B	B	B	B	B	B	D	D	D	D	D	D	D
	70	B	B	B	B	D	B	D	D	D	D	D	D	D	D	D
	80	B	B	D	D	D	D	D	D	D	D	D	D	D	D	D
	90	D	D	D	D	D	D	D	D	D	D	D	D	D	D	D
	100	D	D	D	D	D	D	D	D	D	D	F	F	F	F	F

REVIEWED FOR CODE COMPLIANCE
HCAI
OPM-0043
BY: William Staehlin
ON DATE: 01/23/2023
CALIFORNIA BUILDING CODE 2022

NOTES:

1. REFER TO PAGE T1.0 FOR TRAPEZE MEMBER SIZE DESIGNATIONS & ALLOWABLE MOMENT CAPACITIES.
2. STEEL ANGLE MAY BE USED IN PLACE OF CHANNEL STRUT. FOR 1⅝"x1⅝"x12 GA SINGLE STRUT, USE L2½x2½x¼. FOR 1⅝"x3¼"x12 GA SINGLE STRUT, USE L3x3x¼. FOR 1⅝"x1⅝"x12 GA SINGLE STRUT CONTRACTOR MAY USE 1⅝x1 13/16x12GA DOUBLE STRUT AS A SUBSTITUTION.
3. TRAPEZE MEMBERS MAY BE PROVIDED WITH ROUND HOLES. REFER TO X7.0 AND X7.1 FOR STRUT MEMBER DATA.
4. MAXIMUM SPAN OF TRAPEZE MEMBER IS MEASURED BETWEEN CENTER OF HANGER RODS.
5. CONTRACTOR MAY USE ANY TRAPEZE MEMBER SIZE LARGER THAN IS TABULATED. FOR EXAMPLE, IF TRAPEZE MEMBER "A" IS THE MINIMUM REQUIREMENT, TRAPEZE MEMBER B, D, F, OR G CAN ALSO BE USED.
6. WHEN INCREASING DISTANCE FROM EDGE OF DUCT TO CENTER OF HANGER ROD MORE THAN 6", INCREASE THE WEIGHT PER FOOT BY A FACTOR OF INCREASED EDGE DISTANCE DIVIDED BY 6". FOR EXAMPLE, A 12" DUCT WEIGHING 9 LB/FT WITH AN EDGE DISTANCE OF 12" MUST INCREASE THE WEIGHT BY A FACTOR OF 2 (12"/6") TO USE THE ABOVE TABLE.
7. MAXIMUM LONGITUDINAL DUCT BRACE SPACING IS 60 FEET.

MASON WEST
1601 E. Miraloma Ave. Placentia, CA 92870
TEL (714) 630 - 0701, www.masonwest.com

Jiefu "Jeff" Zhang, SE
California SE No. S5270

PAGE
T1.2

DUCT	TRAPEZE SELECTION TABLES	LATERAL FORCE Fp = 0.50g (ASD) VERTICAL FORCE Fpv = 0.375g (ASD)

Fp = 0.5g Fpv = 0.375g		TRAPEZE SIZE DESIGNATION @ ALL-DIRECTIONAL AND LONGITUDINAL SEISMIC BRACE LOCATIONS														
DUCT SUPPORT AT 10'-0" MAX.		LONG. & ALL-DIR. SEISMIC LOCATION SPACING 10 FT					LONG. & ALL-DIR. SEISMIC LOCATION SPACING 20 FT					LONG. & ALL-DIR. SEISMIC LOCATION SPACING 30 FT				
		MAX TRAPEZE SPAN					MAX TRAPEZE SPAN					MAX TRAPEZE SPAN				
		36 IN	54 IN	72 IN	96 IN	120 IN	36 IN	54 IN	72 IN	96 IN	120 IN	36 IN	54 IN	72 IN	96 IN	120 IN
DUCT WEIGHT (LBS/FT)	10	A	A	A	B	B	A	A	A	B	B	A	A	A	B	B
	20	A	A	A	B	B	A	A	A	B	B	A	A	A	B	B
	30	A	A	B	B	B	A	A	B	B	B	A	A	B	B	B
	40	A	B	B	B	B	A	B	B	B	B	A	B	B	B	B
	50	B	B	B	B	B	B	B	B	B	B	B	B	B	B	B
	60	B	B	B	B	B	B	B	B	B	B	B	B	B	B	B
	70	B	B	B	B	B	B	B	B	B	B	B	B	B	B	D
	80	B	B	B	B	B	B	B	B	B	B	B	B	D	D	D
	90	B	B	B	B	B	B	B	B	B	B	D	D	D	D	D
	100	B	B	B	B	D	B	B	B	B	D	D	D	D	D	D

Fp = 0.5g Fpv = 0.375g		TRAPEZE SIZE DESIGNATION @ ALL-DIRECTIONAL AND LONGITUDINAL SEISMIC BRACE LOCATIONS														
DUCT SUPPORT AT 10'-0" MAX.		LONG. & ALL-DIR. SEISMIC LOCATION SPACING 40 FT					LONG. & ALL-DIR. SEISMIC LOCATION SPACING 50 FT					LONG. & ALL-DIR. SEISMIC LOCATION SPACING 60 FT				
		MAX TRAPEZE SPAN					MAX TRAPEZE SPAN					MAX TRAPEZE SPAN				
		36 IN	54 IN	72 IN	96 IN	120 IN	36 IN	54 IN	72 IN	96 IN	120 IN	36 IN	54 IN	72 IN	96 IN	120 IN
DUCT WEIGHT (LBS/FT)	10	A	A	A	B	B	A	A	A	B	B	A	A	A	B	B
	20	A	A	A	B	B	A	A	A	B	B	A	A	B	B	B
	30	A	A	B	B	B	A	B	B	B	B	B	B	B	B	B
	40	B	B	B	B	B	B	B	B	B	D	B	B	D	D	D
	50	B	B	B	B	D	B	B	D	D	D	D	D	D	D	D
	60	B	B	D	D	D	D	D	D	D	D	D	D	D	D	D
	70	D	D	D	D	D	D	D	D	D	D	D	D	D	D	F
	80	D	D	D	D	D	D	D	D	D	D	F	F	F	F	F
	90	D	D	D	D	D	F	F	F	F	F	F	F	F	F	F
	100	D	D	D	D	D	F	F	F	F	F	F	F	F	F	G

REVIEWED FOR CODE COMPLIANCE
HCAI
OPM-0043
BY: William Staehlin
DATE: 01/23/2023
CALIFORNIA BUILDING CODE 2022

NOTES:

1. REFER TO PAGE T1.0 FOR TRAPEZE MEMBER SIZE DESIGNATIONS & ALLOWABLE MOMENT CAPACITIES.
2. STEEL ANGLE MAY BE USED IN PLACE OF CHANNEL STRUT. FOR 1⅝"x1⅝"x12 GA SINGLE STRUT, USE L2½x2½x¼. FOR 1⅝"x3¼"x12 GA SINGLE STRUT, USE L3x3x¼. FOR 1⅝"x1⅝"x12 GA SINGLE STRUT CONTRACTOR MAY USE 1⅝x1 13/16x12GA DOUBLE STRUT AS A SUBSTITUTION.
3. TRAPEZE MEMBERS MAY BE PROVIDED WITH ROUND HOLES. REFER TO X7.0 AND X7.1 FOR STRUT MEMBER DATA.
4. MAXIMUM SPAN OF TRAPEZE MEMBER IS MEASURED BETWEEN CENTER OF HANGER RODS.
5. CONTRACTOR MAY USE ANY TRAPEZE MEMBER SIZE LARGER THAN IS TABULATED. FOR EXAMPLE, IF TRAPEZE MEMBER "A" IS THE MINIMUM REQUIREMENT, TRAPEZE MEMBER B, D, F, OR G CAN ALSO BE USED.
6. WHEN INCREASING DISTANCE FROM EDGE OF DUCT TO CENTER OF HANGER ROD MORE THAN 6", INCREASE THE WEIGHT PER FOOT BY A FACTOR OF INCREASED EDGE DISTANCE DIVIDED BY 6". FOR EXAMPLE, A 12" DUCT WEIGHING 9 LB/FT WITH AN EDGE DISTANCE OF 12" MUST INCREASE THE WEIGHT BY A FACTOR OF 2 (12"/6") TO USE THE ABOVE TABLE.
7. MAXIMUM LONGITUDINAL DUCT BRACE SPACING IS 60 FEET.

MASON WEST
1601 E. Miraloma Ave. Placentia, CA 92870
TEL (714) 630 - 0701, www.masonwest.com

Jiefu "Jeff" Zhang, SE
California SE No. S5270

PAGE
T1.3

DUCT	TRAPEZE SELECTION TABLES	LATERAL FORCE Fp = 0.625g (ASD) VERTICAL FORCE Fpv = 0.375g (ASD)

Fp = 0.625g Fpv = 0.375g		TRAPEZE SIZE DESIGNATION @ ALL-DIRECTIONAL AND LONGITUDINAL SEISMIC BRACE LOCATIONS														
DUCT SUPPORT AT 10'-0" MAX.		LONG. & ALL-DIR. SEISMIC LOCATION SPACING 10 FT					LONG. & ALL-DIR. SEISMIC LOCATION SPACING 20 FT					LONG. & ALL-DIR. SEISMIC LOCATION SPACING 30 FT				
		MAX TRAPEZE SPAN					MAX TRAPEZE SPAN					MAX TRAPEZE SPAN				
		36 IN	54 IN	72 IN	96 IN	120 IN	36 IN	54 IN	72 IN	96 IN	120 IN	36 IN	54 IN	72 IN	96 IN	120 IN
DUCT WEIGHT (LBS/FT)	10	A	A	A	B	B	A	A	A	B	B	A	A	A	B	B
	20	A	A	A	B	B	A	A	A	B	B	A	A	A	B	B
	30	A	A	B	B	B	A	A	B	B	B	A	A	B	B	B
	40	A	B	B	B	B	A	B	B	B	B	A	B	B	B	B
	50	B	B	B	B	B	B	B	B	B	B	B	B	B	B	B
	60	B	B	B	B	B	B	B	B	B	B	B	B	B	D	D
	70	B	B	B	B	B	B	B	B	B	B	B	D	D	D	D
	80	B	B	B	B	B	B	B	B	B	D	D	D	D	D	D
	90	B	B	B	B	B	B	B	B	D	D	D	D	D	D	D
	100	B	B	B	B	D	B	B	D	D	D	D	D	D	D	D

Fp = 0.625g Fpv = 0.375g		TRAPEZE SIZE DESIGNATION @ ALL-DIRECTIONAL AND LONGITUDINAL SEISMIC BRACE LOCATIONS														
DUCT SUPPORT AT 10'-0" MAX.		LONG. & ALL-DIR. SEISMIC LOCATION SPACING 40 FT					LONG. & ALL-DIR. SEISMIC LOCATION SPACING 50 FT					LONG. & ALL-DIR. SEISMIC LOCATION SPACING 60 FT				
		MAX TRAPEZE SPAN					MAX TRAPEZE SPAN					MAX TRAPEZE SPAN				
		36 IN	54 IN	72 IN	96 IN	120 IN	36 IN	54 IN	72 IN	96 IN	120 IN	36 IN	54 IN	72 IN	96 IN	120 IN
DUCT WEIGHT (LBS/FT)	10	A	A	A	B	B	A	A	A	B	B	A	A	A	B	B
	20	A	A	A	B	B	A	A	A	B	B	A	B	B	B	B
	30	A	B	B	B	B	B	B	B	B	B	B	B	B	D	D
	40	B	B	B	B	D	B	B	D	D	D	D	D	D	D	D
	50	B	B	D	D	D	D	D	D	D	D	D	D	D	D	D
	60	D	D	D	D	D	D	D	D	D	D	F	F	F	F	F
	70	D	D	D	D	D	D	D	D	F	F	F	F	F	F	F
	80	D	D	D	D	D	F	F	F	F	F	F	F	F	F	G
	90	F	F	F	F	F	F	F	F	F	F	F	G	G	G	G
	100	F	F	F	F	F	F	F	F	G	G	G	G	G	G	G

REVIEWED FOR CODE COMPLIANCE
HCAI
OPM-0043
BY: William Staehlin
ON DATE: 01/23/2023
CALIFORNIA BUILDING CODE 2022

NOTES:

1. REFER TO PAGE T1.0 FOR TRAPEZE MEMBER SIZE DESIGNATIONS & ALLOWABLE MOMENT CAPACITIES.
2. STEEL ANGLE MAY BE USED IN PLACE OF CHANNEL STRUT. FOR 1⅝"x1⅝"x12 GA SINGLE STRUT, USE L2½x2½x¼. FOR 1⅝"x3¼"x12 GA SINGLE STRUT, USE L3x3x¼. FOR 1⅝"x1⅝"x12 GA SINGLE STRUT CONTRACTOR MAY USE 1⅝x1 13/16x12GA DOUBLE STRUT AS A SUBSTITUTION.
3. TRAPEZE MEMBERS MAY BE PROVIDED WITH ROUND HOLES. REFER TO X7.0 AND X7.1 FOR STRUT MEMBER DATA.
4. MAXIMUM SPAN OF TRAPEZE MEMBER IS MEASURED BETWEEN CENTER OF HANGER RODS.
5. CONTRACTOR MAY USE ANY TRAPEZE MEMBER SIZE LARGER THAN IS TABULATED. FOR EXAMPLE, IF TRAPEZE MEMBER "A" IS THE MINIMUM REQUIREMENT, TRAPEZE MEMBER B, D, F, OR G CAN ALSO BE USED.
6. WHEN INCREASING DISTANCE FROM EDGE OF DUCT TO CENTER OF HANGER ROD MORE THAN 6", INCREASE THE WEIGHT PER FOOT BY A FACTOR OF INCREASED EDGE DISTANCE DIVIDED BY 6". FOR EXAMPLE, A 12" DUCT WEIGHING 9 LB/FT WITH AN EDGE DISTANCE OF 12" MUST INCREASE THE WEIGHT BY A FACTOR OF 2 (12"/6") TO USE THE ABOVE TABLE.
7. MAXIMUM LONGITUDINAL DUCT BRACE SPACING IS 60 FEET.

MASON WEST
1601 E. Miraloma Ave. Placentia, CA 92870
TEL (714) 630 - 0701, www.masonwest.com

Jiefu "Jeff" Zhang, SE
California SE No. S5270

PAGE
T1.4

DUCT	TRAPEZE SELECTION TABLES	LATERAL FORCE Fp = 0.75g (ASD) VERTICAL FORCE Fpv = 0.375g (ASD)

Fp = 0.75g Fpv = 0.375g		TRAPEZE SIZE DESIGNATION @ ALL-DIRECTIONAL AND LONGITUDINAL SEISMIC BRACE LOCATIONS														
DUCT SUPPORT AT 10'-0" MAX.		LONG. & ALL-DIR. SEISMIC LOCATION SPACING 10 FT					LONG. & ALL-DIR. SEISMIC LOCATION SPACING 20 FT					LONG. & ALL-DIR. SEISMIC LOCATION SPACING 30 FT				
		MAX TRAPEZE SPAN					MAX TRAPEZE SPAN					MAX TRAPEZE SPAN				
		36 IN	54 IN	72 IN	96 IN	120 IN	36 IN	54 IN	72 IN	96 IN	120 IN	36 IN	54 IN	72 IN	96 IN	120 IN
DUCT WEIGHT (LBS/FT)	10	A	A	A	B	B	A	A	A	B	B	A	A	A	B	B
	20	A	A	A	B	B	A	A	A	B	B	A	A	A	B	B
	30	A	A	B	B	B	A	A	B	B	B	A	A	B	B	B
	40	A	B	B	B	B	A	B	B	B	B	B	B	B	B	B
	50	B	B	B	B	B	B	B	B	B	B	B	B	B	D	D
	60	B	B	B	B	B	B	B	B	B	B	D	D	D	D	D
	70	B	B	B	B	B	B	B	B	B	D	D	D	D	D	D
	80	B	B	B	B	B	B	B	D	D	D	D	D	D	D	D
	90	B	B	B	B	B	D	D	D	D	D	D	D	D	D	D
	100	B	B	B	B	D	D	D	D	D	D	F	F	F	F	F

Fp = 0.75g Fpv = 0.375g		TRAPEZE SIZE DESIGNATION @ ALL-DIRECTIONAL AND LONGITUDINAL SEISMIC BRACE LOCATIONS														
DUCT SUPPORT AT 10'-0" MAX.		LONG. & ALL-DIR. SEISMIC LOCATION SPACING 40 FT					LONG. & ALL-DIR. SEISMIC LOCATION SPACING 50 FT					LONG. & ALL-DIR. SEISMIC LOCATION SPACING 60 FT				
		MAX TRAPEZE SPAN					MAX TRAPEZE SPAN					MAX TRAPEZE SPAN				
		36 IN	54 IN	72 IN	96 IN	120 IN	36 IN	54 IN	72 IN	96 IN	120 IN	36 IN	54 IN	72 IN	96 IN	120 IN
DUCT WEIGHT (LBS/FT)	10	A	A	A	B	B	A	A	A	B	B	A	A	A	B	B
	20	A	A	B	B	B	A	B	B	B	B	B	B	B	B	B
	30	B	B	B	B	B	B	B	B	D	D	D	D	D	D	D
	40	B	B	D	D	D	D	D	D	D	D	D	D	D	D	D
	50	D	D	D	D	D	D	D	D	D	D	F	F	F	F	F
	60	D	D	D	D	D	F	F	F	F	F	F	F	F	F	F
	70	D	D	D	D	F	F	F	F	F	F	F	F	F	G	G
	80	F	F	F	F	F	F	F	F	F	G	G	G	G	G	G
	90	F	F	F	F	F	F	G	G	G	G	G	G	G	G	G
	100	F	F	F	F	G	G	G	G	G	G	G	G	G	G	G

REVIEWED FOR CODE COMPLIANCE
HCAI
OPM-0043
BY: William Staehlin
DATE: 01/23/2023
CALIFORNIA BUILDING CODE 2022

NOTES:

1. REFER TO PAGE T1.0 FOR TRAPEZE MEMBER SIZE DESIGNATIONS & ALLOWABLE MOMENT CAPACITIES.
2. STEEL ANGLE MAY BE USED IN PLACE OF CHANNEL STRUT. FOR 1⅝"x1⅝"x12 GA SINGLE STRUT, USE L2½x2½x¼. FOR 1⅝"x3¼"x12 GA SINGLE STRUT, USE L3x3x¼. FOR 1⅝"x1⅝"x12 GA SINGLE STRUT CONTRACTOR MAY USE 1⅝x1 13/16x12GA DOUBLE STRUT AS A SUBSTITUTION.
3. TRAPEZE MEMBERS MAY BE PROVIDED WITH ROUND HOLES. REFER TO X7.0 AND X7.1 FOR STRUT MEMBER DATA.
4. MAXIMUM SPAN OF TRAPEZE MEMBER IS MEASURED BETWEEN CENTER OF HANGER RODS.
5. CONTRACTOR MAY USE ANY TRAPEZE MEMBER SIZE LARGER THAN IS TABULATED. FOR EXAMPLE, IF TRAPEZE MEMBER "A" IS THE MINIMUM REQUIREMENT, TRAPEZE MEMBER B, D, F, OR G CAN ALSO BE USED.
6. WHEN INCREASING DISTANCE FROM EDGE OF DUCT TO CENTER OF HANGER ROD MORE THAN 6", INCREASE THE WEIGHT PER FOOT BY A FACTOR OF INCREASED EDGE DISTANCE DIVIDED BY 6". FOR EXAMPLE, A 12" DUCT WEIGHING 9 LB/FT WITH AN EDGE DISTANCE OF 12" MUST INCREASE THE WEIGHT BY A FACTOR OF 2 (12"/6") TO USE THE ABOVE TABLE.
7. MAXIMUM LONGITUDINAL DUCT BRACE SPACING IS 60 FEET.

MASON WEST
1601 E. Miraloma Ave. Placentia, CA 92870
TEL (714) 630 - 0701, www.masonwest.com

Jiefu "Jeff" Zhang, SE
California SE No. S5270

DUCT	TRAPEZE SELECTION TABLES	LATERAL FORCE Fp = 0.875g (ASD) VERTICAL FORCE Fpv = 0.375g (ASD)

Fp = 0.875g Fpv = 0.375g		TRAPEZE SIZE DESIGNATION @ ALL-DIRECTIONAL AND LONGITUDINAL SEISMIC BRACE LOCATIONS														
DUCT SUPPORT AT 10'-0" MAX.		LONG. & ALL-DIR. SEISMIC LOCATION SPACING 10 FT					LONG. & ALL-DIR. SEISMIC LOCATION SPACING 20 FT					LONG. & ALL-DIR. SEISMIC LOCATION SPACING 30 FT				
		MAX TRAPEZE SPAN					MAX TRAPEZE SPAN					MAX TRAPEZE SPAN				
		36 IN	54 IN	72 IN	96 IN	120 IN	36 IN	54 IN	72 IN	96 IN	120 IN	36 IN	54 IN	72 IN	96 IN	120 IN
DUCT WEIGHT (LBS/FT)	10	A	A	A	B	B	A	A	A	B	B	A	A	A	B	B
	20	A	A	A	B	B	A	A	A	B	B	A	A	A	B	B
	30	A	A	B	B	B	A	A	B	B	B	A	B	B	B	B
	40	A	B	B	B	B	A	B	B	B	B	B	B	B	B	D
	50	B	B	B	B	B	B	B	B	B	B	B	D	D	D	D
	60	B	B	B	B	B	B	B	B	B	D	D	D	D	D	D
	70	B	B	B	B	B	B	B	D	D	D	D	D	D	D	D
	80	B	B	B	B	B	D	D	D	D	D	D	D	D	D	F
	90	B	B	B	B	B	D	D	D	D	D	F	F	F	F	F
	100	B	B	B	B	D	D	D	D	D	D	F	F	F	F	F

Fp = 0.875g Fpv = 0.375g		TRAPEZE SIZE DESIGNATION @ ALL-DIRECTIONAL AND LONGITUDINAL SEISMIC BRACE LOCATIONS														
DUCT SUPPORT AT 10'-0" MAX.		LONG. & ALL-DIR. SEISMIC LOCATION SPACING 40 FT					LONG. & ALL-DIR. SEISMIC LOCATION SPACING 50 FT					LONG. & ALL-DIR. SEISMIC LOCATION SPACING 60 FT				
		MAX TRAPEZE SPAN					MAX TRAPEZE SPAN					MAX TRAPEZE SPAN				
		36 IN	54 IN	72 IN	96 IN	120 IN	36 IN	54 IN	72 IN	96 IN	120 IN	36 IN	54 IN	72 IN	96 IN	120 IN
DUCT WEIGHT (LBS/FT)	10	A	A	A	B	B	A	A	A	B	B	A	A	A	B	B
	20	A	B	B	B	B	B	B	B	B	B	B	B	B	B	D
	30	B	B	B	B	D	B	D	D	D	D	D	D	D	D	D
	40	D	D	D	D	D	D	D	D	D	D	D	D	D	D	F
	50	D	D	D	D	D	D	D	D	F	F	F	F	F	F	F
	60	D	D	D	D	F	F	F	F	F	F	F	F	F	G	G
	70	F	F	F	F	F	F	F	F	F	G	G	G	G	G	G
	80	F	F	F	F	F	G	G	G	G	G	G	G	G	G	G
	90	F	F	F	G	G	G	G	G	G	G	G	G	G	G	G
	100	G	G	G	G	G	G	G	G	G	G	N/A	N/A	N/A	N/A	N/A

REVIEWED FOR CODE COMPLIANCE
HCAI
OPM-0043
BY: William Staehlin
ON DATE: 01/23/2023
CALIFORNIA BUILDING CODE 2022

NOTES:

1. REFER TO PAGE T1.0 FOR TRAPEZE MEMBER SIZE DESIGNATIONS & ALLOWABLE MOMENT CAPACITIES.
2. STEEL ANGLE MAY BE USED IN PLACE OF CHANNEL STRUT. FOR 1⅝"x1⅝"x12 GA SINGLE STRUT, USE L2½x2½x¼. FOR 1⅝"x3¼"x12 GA SINGLE STRUT, USE L3x3x¼. FOR 1⅝"x1⅝"x12 GA SINGLE STRUT CONTRACTOR MAY USE 1⅝x1 13/16x12GA DOUBLE STRUT AS A SUBSTITUTION.
3. TRAPEZE MEMBERS MAY BE PROVIDED WITH ROUND HOLES. REFER TO X7.0 AND X7.1 FOR STRUT MEMBER DATA.
4. MAXIMUM SPAN OF TRAPEZE MEMBER IS MEASURED BETWEEN CENTER OF HANGER RODS.
5. CONTRACTOR MAY USE ANY TRAPEZE MEMBER SIZE LARGER THAN IS TABULATED. FOR EXAMPLE, IF TRAPEZE MEMBER "A" IS THE MINIMUM REQUIREMENT, TRAPEZE MEMBER B, D, F, OR G CAN ALSO BE USED.
6. WHEN INCREASING DISTANCE FROM EDGE OF DUCT TO CENTER OF HANGER ROD MORE THAN 6", INCREASE THE WEIGHT PER FOOT BY A FACTOR OF INCREASED EDGE DISTANCE DIVIDED BY 6". FOR EXAMPLE, A 12" DUCT WEIGHING 9 LB/FT WITH AN EDGE DISTANCE OF 12" MUST INCREASE THE WEIGHT BY A FACTOR OF 2 (12"/6") TO USE THE ABOVE TABLE.
7. MAXIMUM LONGITUDINAL DUCT BRACE SPACING IS 60 FEET.

MASON WEST
1601 E. Miraloma Ave. Placentia, CA 92870
TEL (714) 630 - 0701, www.masonwest.com

Jiefu "Jeff" Zhang, SE
California SE No. S5270

PAGE
T1.6

DUCT	TRAPEZE SELECTION TABLES	LATERAL FORCE Fp = 1.00g (ASD) VERTICAL FORCE Fpv = 0.375g (ASD)

Fp = 1g Fpv = 0.375g		TRAPEZE SIZE DESIGNATION @ ALL-DIRECTIONAL AND LONGITUDINAL SEISMIC BRACE LOCATIONS														
DUCT SUPPORT AT 10'-0" MAX.		LONG. & ALL-DIR. SEISMIC LOCATION SPACING 10 FT					LONG. & ALL-DIR. SEISMIC LOCATION SPACING 20 FT					LONG. & ALL-DIR. SEISMIC LOCATION SPACING 30 FT				
		MAX TRAPEZE SPAN					MAX TRAPEZE SPAN					MAX TRAPEZE SPAN				
		36 IN	54 IN	72 IN	96 IN	120 IN	36 IN	54 IN	72 IN	96 IN	120 IN	36 IN	54 IN	72 IN	96 IN	120 IN
DUCT WEIGHT (LBS/FT)	10	A	A	A	B	B	A	A	A	B	B	A	A	A	B	B
	20	A	A	A	B	B	A	A	A	B	B	A	A	B	B	B
	30	A	A	B	B	B	A	A	B	B	B	B	B	B	B	B
	40	A	B	B	B	B	B	B	B	B	B	B	B	D	D	D
	50	B	B	B	B	B	B	B	B	B	D	D	D	D	D	D
	60	B	B	B	B	B	B	B	D	D	D	D	D	D	D	D
	70	B	B	B	B	B	D	D	D	D	D	D	D	D	D	F
	80	B	B	B	B	B	D	D	D	D	D	F	F	F	F	F
	90	B	B	B	B	B	D	D	D	D	D	F	F	F	F	F
	100	B	B	B	B	D	D	D	D	D	D	F	F	F	F	G

Fp = 1g Fpv = 0.375g		TRAPEZE SIZE DESIGNATION @ ALL-DIRECTIONAL AND LONGITUDINAL SEISMIC BRACE LOCATIONS														
DUCT SUPPORT AT 10'-0" MAX.		LONG. & ALL-DIR. SEISMIC LOCATION SPACING 40 FT					LONG. & ALL-DIR. SEISMIC LOCATION SPACING 50 FT					LONG. & ALL-DIR. SEISMIC LOCATION SPACING 60 FT				
		MAX TRAPEZE SPAN					MAX TRAPEZE SPAN					MAX TRAPEZE SPAN				
		36 IN	54 IN	72 IN	96 IN	120 IN	36 IN	54 IN	72 IN	96 IN	120 IN	36 IN	54 IN	72 IN	96 IN	120 IN
DUCT WEIGHT (LBS/FT)	10	A	A	A	B	B	A	A	A	B	B	A	A	B	B	B
	20	B	B	B	B	B	B	B	B	B	D	B	B	D	D	D
	30	B	B	D	D	D	D	D	D	D	D	D	D	D	D	D
	40	D	D	D	D	D	D	D	D	D	D	F	F	F	F	F
	50	D	D	D	D	D	F	F	F	F	F	F	F	F	F	G
	60	F	F	F	F	F	F	F	F	F	G	G	G	G	G	G
	70	F	F	F	F	F	G	G	G	G	G	G	G	G	G	G
	80	F	F	F	G	G	G	G	G	G	G	G	G	G	G	G
	90	G	G	G	G	G	G	G	G	G	G	N/A	N/A	N/A	N/A	N/A
	100	G	G	G	G	G	G	G	G	G	N/A	N/A	N/A	N/A	N/A	N/A

REVIEWED FOR CODE COMPLIANCE
OPM-0043
By: William Staehlin
DATE: 01/23/2023
CALIFORNIA BUILDING CODE 2022

NOTES:

1. REFER TO PAGE T1.0 FOR TRAPEZE MEMBER SIZE DESIGNATIONS & ALLOWABLE MOMENT CAPACITIES.
2. STEEL ANGLE MAY BE USED IN PLACE OF CHANNEL STRUT. FOR 1⅝"x1⅝"x12 GA SINGLE STRUT, USE L2½x2½x¼. FOR 1⅝"x3¼"x12 GA SINGLE STRUT, USE L3x3x¼. FOR 1⅝"x1⅝"x12 GA SINGLE STRUT CONTRACTOR MAY USE 1⅝x1 13/16x12GA DOUBLE STRUT AS A SUBSTITUTION.
3. TRAPEZE MEMBERS MAY BE PROVIDED WITH ROUND HOLES. REFER TO X7.0 AND X7.1 FOR STRUT MEMBER DATA.
4. MAXIMUM SPAN OF TRAPEZE MEMBER IS MEASURED BETWEEN CENTER OF HANGER RODS.
5. CONTRACTOR MAY USE ANY TRAPEZE MEMBER SIZE LARGER THAN IS TABULATED. FOR EXAMPLE, IF TRAPEZE MEMBER "A" IS THE MINIMUM REQUIREMENT, TRAPEZE MEMBER B, D, F, OR G CAN ALSO BE USED.
6. WHEN INCREASING DISTANCE FROM EDGE OF DUCT TO CENTER OF HANGER ROD MORE THAN 6", INCREASE THE WEIGHT PER FOOT BY A FACTOR OF INCREASED EDGE DISTANCE DIVIDED BY 6". FOR EXAMPLE, A 12" DUCT WEIGHING 9 LB/FT WITH AN EDGE DISTANCE OF 12" MUST INCREASE THE WEIGHT BY A FACTOR OF 2 (12"/6") TO USE THE ABOVE TABLE.
7. MAXIMUM LONGITUDINAL DUCT BRACE SPACING IS 60 FEET.

MASON WEST
1601 E. Miraloma Ave. Placentia, CA 92870
TEL (714) 630 - 0701, www.masonwest.com

Jiefu "Jeff" Zhang, SE
California SE No. S5270

PIPING/CONDUIT	TRAPEZE SELECTION TABLES	VERTICAL FORCE Fpv = 0.375g (ASD)

Fpv = 0.375g		TRAPEZE SIZE DESIGNATION @ TRANSVERSE SEISMIC BRACE LOCATIONS				
PIPING/CONDUIT SUPPORT AT 10'-0" MAX.		MAX TRAPEZE SPAN				
		36 IN	54 IN	72 IN	96 IN	120 IN
PIPING/CONDUIT WEIGHT (LBS/FT)	10	A	B	B	D	D
	20	B	B	D	D	E
	30	B	D	D	E	J
	40	B	D	E	E	J
	50	B	D	E	J	J
	60	D	D	E	J	J
	70	D	D	E	J	J
	80	D	E	J	J	J
	90	D	E	J	J	J
	100	D	E	J	J	J
	150	D	J	J	J	K
	200	G	J	J	K	K
	300	J	J	K	K	L
	400	J	J	K	K	L
	600	J	K	K	L	L

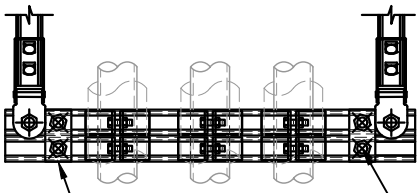

(2) TRAPEZE MEMBER INSTALLATION DETAIL FOR TRAPEZE MEMBER DESIGNATION AA, BB, CC, DD & EE

TRAPEZE MEMBER TABLE											
		ALLOWABLE MOMENT CAPACITY (KIP-IN)									
		36" SPAN		54" SPAN		72" SPAN		96" SPAN		120" SPAN	
DESIGNATION	SIZE	Mcx	Mcy	Mcx	Mcy	Mcx	Mcy	Mcx	Mcy	Mcx	Mcy
A	13/16 x 1 5/8 x 12GA SINGLE STRUT	1.61	3.94	1.60	3.41	1.57	2.88	1.52	2.21	1.48	1.76
AA	(2) 13/16 x 1 5/8 x 12GA SINGLE STRUT	1.61	7.88	1.60	6.81	1.57	5.77	1.52	4.42	1.48	3.51
B	1 5/8 x 1 5/8 x 12GA SINGLE STRUT	4.76	6.57	4.23	6.38	3.84	5.95	3.45	5.40	3.12	4.85
C	13/16 x 1 5/8 x 12GA DOUBLE STRUT	4.58	8.50	4.58	7.81	4.58	7.13	4.41	6.24	4.23	5.36
BB	(2) 1 5/8 x 1 5/8 x 12GA SINGLE STRUT	4.76	13.13	4.23	12.75	3.84	11.91	3.45	10.79	3.12	9.70
CC	(2) 13/16 x 1 5/8 x 12GA DOUBLE STRUT	4.58	17.00	4.58	15.62	4.58	14.26	4.41	12.49	4.23	10.73
D	1 5/8 x 3 1/4 x 12GA SINGLE STRUT	13.26	11.11	9.25	11.11	6.42	11.11	4.78	10.87	3.98	10.35
E	1 5/8 x 1 5/8 x 12GA DOUBLE STRUT	14.82	13.13	14.40	13.13	13.45	12.91	12.20	12.21	10.98	11.53
DD	(2) 1 5/8 x 3 1/4 x 12GA SINGLE STRUT	13.26	22.23	9.25	22.23	6.42	22.23	4.78	21.73	3.98	20.69
EE	(2) 1 5/8 x 1 5/8 x 12GA DOUBLE STRUT	14.82	26.26	14.40	26.26	13.45	25.81	12.20	24.42	10.98	23.05
G	HSS 2 x 2 x ¼ (L 4 x 4 x ¼)	25.94	25.94	25.94	25.94	25.94	25.94	25.74	25.74	24.89	24.89
J	HSS 3 x 3 x ¼ (L 6 x 6 x ⅜)	68.28	68.28	68.28	68.28	68.28	68.28	68.28	68.28	68.28	68.28
K	HSS 4 x 4 x ¼	129.60	129.60	129.60	129.60	129.60	129.60	129.60	129.60	129.60	129.60
L	HSS 6 x 6 x ⅜	435.60	435.60	435.60	435.60	435.60	435.60	435.60	435.60	435.60	435.60

REVIEWED FOR CODE COMPLIANCE
HCAI
OPM-0043
By: William Staehlin
DATE: 01/23/2023
CALIFORNIA BUILDING CODE

NOTES:

1. REFER TO TABLE ABOVE FOR TRAPEZE MEMBER SIZE DESIGNATIONS & ALLOWABLE MOMENT CAPACITIES.
2. STEEL ANGLE MAY BE USED IN PLACE OF CHANNEL STRUT. FOR 1⅝"x1⅝"x12 GA SINGLE STRUT, USE L2½x2½x¼. FOR 1⅝"x3¼"x12 GA SINGLE STRUT, USE L3x3x¼. FOR 1⅝"x1⅝"x12 GA SINGLE STRUT CONTRACTOR MAY USE 1⅝x1³⁄₁₆x12GA DOUBLE STRUT AS A SUBSTITUTION.
3. TRAPEZE MEMBERS MAY BE PROVIDED WITH ROUND HOLES. REFER TO X7.0 AND X7.1 FOR STRUT MEMBER DATA.
4. MAXIMUM SPAN OF TRAPEZE MEMBER IS MEASURED BETWEEN CENTER OF HANGER RODS.
5. CONTRACTOR MAY USE ANY TRAPEZE MEMBER SIZE LARGER THAN IS TABULATED. FOR EXAMPLE, IF TRAPEZE MEMBER SIZE "A" IS THE MINIMUM REQUIREMENT, THEN TRAPEZE MEMBER AA, B, BB, C, CC, D, DD, E, EE, G, J, K, OR L CAN ALSO BE USED.
6. PIPING/CONDUIT WEIGHT IN CHARTS IS THE TOTAL COMBINED WEIGHT OF ALL SYSTEMS SUPPORTED BY THE TRAPEZE. TRAPEZE DESIGN IS BASED ON SUPPORT OF AT LEAST (2) PIPES AT 1/3-1/3-1/3. FOR CASES WHERE (1) PIPE (OR A CONCENTRATION OF (2) OR MORE PIPES) IS LOCATED AT OR NEAR THE MID-SPAN, INCREASE THE PIPING/CONDUIT WEIGHT IN THE CHARTS BY 50% AND THEN USE THE TABLE TO SELECT THE TRAPEZE MEMBER.
7. INDIVIDUAL PIPING/CONDUIT MAY GOVERN MAXIMUM GRAVITY SUPPORT AND TRANSVERSE BRACE SPACING. REFER TO S1 AND S2 PAGES.

MASON WEST
1601 E. Miraloma Ave. Placentia, CA 92870
TEL (714) 630 - 0701, www.masonwest.com

Jiefu "Jeff" Zhang, SE
California SE No. S5270

PAGE
T2.0

PIPING/CONDUIT	TRAPEZE SELECTION TABLES	LATERAL FORCE Fp = 0.25g (ASD) VERTICAL FORCE Fpv = 0.375g (ASD)

Fp = 0.25g Fpv = 0.375g		TRAPEZE SIZE DESIGNATION @ ALL-DIRECTIONAL AND LONGITUDINAL SEISMIC BRACE LOCATIONS																			
PIPING/CONDUIT SUPPORT AT 10'-0" MAX.		LONG. & ALL-DIR. SEISMIC LOCATION SPACING 10 FT					LONG. & ALL-DIR. SEISMIC LOCATION SPACING 20 FT					LONG. & ALL-DIR. SEISMIC LOCATION SPACING 30 FT					LONG. & ALL-DIR. SEISMIC LOCATION SPACING 40 FT				
		MAX TRAPEZE SPAN					MAX TRAPEZE SPAN					MAX TRAPEZE SPAN					MAX TRAPEZE SPAN				
		36 IN	54 IN	72 IN	96 IN	120 IN	36 IN	54 IN	72 IN	96 IN	120 IN	36 IN	54 IN	72 IN	96 IN	120 IN	36 IN	54 IN	72 IN	96 IN	120 IN
PIPING/CONDUIT WEIGHT (LBS/FT)	10	A	B	B	D	D	A	B	B	D	D	A	B	B	D	D	A	B	B	D	D
	20	B	B	D	D	E	B	B	D	DD	E	B	B	D	E	E	B	B	D	E	E
	30	B	D	D	E	J	B	D	D	E	J	B	D	DD	E	J	B	D	DD	E	J
	40	B	D	E	E	J	B	D	E	E	J	B	D	E	EE	J	BB	D	E	EE	J
	50	B	D	E	J	J	BB	D	E	J	J	D	D	E	J	J	D	DD	EE	J	J
	60	D	D	E	J	J	D	DD	EE	J	J	D	DD	EE	J	J	D	E	G	J	J
	70	D	E	EE	J	J	D	E	G	J	J	D	E	G	J	J	D	EE	G	J	J
	80	D	E	J	J	J	D	E	J	J	J	D	EE	J	J	J	D	EE	J	J	J
	90	D	E	J	J	J	D	EE	J	J	J	D	G	J	J	J	DD	G	J	J	J
	100	D	EE	J	J	J	D	G	J	J	J	DD	G	J	J	J	DD	G	J	J	J
	150	EE	J	J	J	K	G	J	J	J	K	G	J	J	J	K	G	J	J	J	K
	200	G	J	J	K	K	G	J	J	K	K	G	J	J	K	K	J	J	J	K	K
	300	J	J	K	K	L	J	J	K	K	L	J	J	K	K	L	J	J	K	K	L
	400	J	J	K	K	L	J	J	K	K	L	J	K	K	L	L	J	K	K	L	L
	600	J	K	K	L	L	J	K	L	L	L	K	K	L	L	L	K	K	L	L	L

Fp = 0.25g Fpv = 0.375g		TRAPEZE SIZE DESIGNATION @ ALL-DIRECTIONAL AND LONGITUDINAL SEISMIC BRACE LOCATIONS																			
PIPING/CONDUIT SUPPORT AT 10'-0" MAX.		LONG. & ALL-DIR. SEISMIC LOCATION SPACING 50 FT					LONG. & ALL-DIR. SEISMIC LOCATION SPACING 60 FT					LONG. & ALL-DIR. SEISMIC LOCATION SPACING 70 FT					LONG. & ALL-DIR. SEISMIC LOCATION SPACING 80 FT				
		MAX TRAPEZE SPAN					MAX TRAPEZE SPAN					MAX TRAPEZE SPAN					MAX TRAPEZE SPAN				
		36 IN	54 IN	72 IN	96 IN	120 IN	36 IN	54 IN	72 IN	96 IN	120 IN	36 IN	54 IN	72 IN	96 IN	120 IN	36 IN	54 IN	72 IN	96 IN	120 IN
PIPING/CONDUIT WEIGHT (LBS/FT)	10	A	B	B	D	D	A	B	B	D	D	A	B	B	D	DD	A	B	B	D	DD
	20	B	B	D	E	E	B	BB	D	E	EE	B	BB	D	E	EE	B	BB	D	E	EE
	30	B	D	DD	EE	J	B	D	E	EE	J	B	D	E	EE	J	BB	D	E	EE	J
	40	BB	D	E	G	J	BB	DD	EE	G	J	CC	DD	EE	G	J	D	DD	EE	G	J
	50	D	DD	EE	J	J	D	DD	EE	J	J	D	EE	G	J	J	D	EE	G	J	J
	60	D	EE	G	J	J	D	EE	G	J	J	D	EE	G	J	J	DD	EE	G	J	J
	70	D	EE	G	J	J	DD	EE	G	J	J	DD	G	J	J	J	DD	G	J	J	J
	80	DD	G	J	J	J	DD	G	J	J	J	DD	G	J	J	J	DD	G	J	J	J
	90	DD	G	J	J	J	DD	G	J	J	J	DD	G	J	J	J	EE	J	J	J	J
	100	DD	G	J	J	J	EE	G	J	J	J	EE	J	J	J	J	G	J	J	J	J
	150	G	J	J	J	K	G	J	J	K	K	J	J	J	K	K	J	J	J	K	K
	200	J	J	J	K	K	J	J	K	K	K	J	J	K	K	K	J	J	K	K	L
	300	J	K	K	K	L	J	K	K	L	L	J	K	K	L	L	J	K	K	L	L
	400	J	K	K	L	L	K	K	L	L	L	K	K	L	L	L	K	K	L	L	L
	600	K	L	L	L	L	K	L	L	L	L	K	L	L	L	L	K	L	L	L	L

NOTES:

1. REFER TO PAGE T2.0 FOR GENERAL NOTES.

REVIEWED FOR CODE COMPLIANCE BY HCAI OPM-0043 DATE: 01/23/2023 CALIFORNIA BUILDING CODE

MASON WEST
1601 E. Miraloma Ave. Placentia, CA 92870
TEL (714) 630 - 0701, www.masonwest.com

Jiefu "Jeff" Zhang, SE
California SE No. S5270

PIPING/CONDUIT	TRAPEZE SELECTION TABLES	LATERAL FORCE Fp = 0.375g (ASD) VERTICAL FORCE Fpv = 0.375g (ASD)

Fp = 0.375g Fpv = 0.375g		TRAPEZE SIZE DESIGNATION @ ALL-DIRECTIONAL AND LONGITUDINAL SEISMIC BRACE LOCATIONS																			
PIPING/CONDUIT SUPPORT AT 10'-0" MAX.		LONG. & ALL-DIR. SEISMIC LOCATION SPACING 10 FT					LONG. & ALL-DIR. SEISMIC LOCATION SPACING 20 FT					LONG. & ALL-DIR. SEISMIC LOCATION SPACING 30 FT					LONG. & ALL-DIR. SEISMIC LOCATION SPACING 40 FT				
		MAX TRAPEZE SPAN					MAX TRAPEZE SPAN					MAX TRAPEZE SPAN					MAX TRAPEZE SPAN				
		36 IN	54 IN	72 IN	96 IN	120 IN	36 IN	54 IN	72 IN	96 IN	120 IN	36 IN	54 IN	72 IN	96 IN	120 IN	36 IN	54 IN	72 IN	96 IN	120 IN
PIPING/CONDUIT WEIGHT (LBS/FT)	10	A	B	B	D	D	A	B	B	D	D	A	B	B	D	D	A	B	B	D	D
	20	B	B	D	DD	E	B	B	D	E	E	B	B	D	E	E	B	BB	D	E	EE
	30	B	D	D	E	J	B	D	DD	E	J	B	D	DD	E	J	B	D	E	EE	J
	40	B	D	E	E	J	B	D	E	EE	J	BB	D	E	G	J	BB	DD	EE	G	J
	50	BB	D	E	J	J	D	D	E	J	J	D	DD	EE	J	J	D	DD	EE	J	J
	60	D	D	E	J	J	D	E	EE	J	J	D	E	G	J	J	D	EE	G	J	J
	70	D	E	EE	J	J	D	E	G	J	J	D	EE	G	J	J	D	EE	G	J	J
	80	D	E	J	J	J	D	EE	J	J	J	D	EE	J	J	J	DD	G	J	J	J
	90	D	EE	J	J	J	D	G	J	J	J	DD	G	J	J	J	DD	G	J	J	J
	100	D	EE	J	J	J	DD	G	J	J	J	DD	G	J	J	J	EE	G	J	J	J
	150	EE	J	J	J	K	G	J	J	J	K	G	J	J	J	K	G	J	J	K	K
	200	G	J	J	K	K	G	J	J	K	K	J	J	J	K	K	J	J	K	K	K
	300	J	J	K	K	L	J	J	K	K	L	J	J	K	K	L	J	K	K	L	L
	400	J	J	K	K	L	J	K	K	L	L	J	K	K	L	L	K	K	L	L	L
	600	J	K	K	L	L	K	K	L	L	L	K	L	L	L	L	K	L	L	L	L

Fp = 0.375g Fpv = 0.375g		TRAPEZE SIZE DESIGNATION @ ALL-DIRECTIONAL AND LONGITUDINAL SEISMIC BRACE LOCATIONS																			
PIPING/CONDUIT SUPPORT AT 10'-0" MAX.		LONG. & ALL-DIR. SEISMIC LOCATION SPACING 50 FT					LONG. & ALL-DIR. SEISMIC LOCATION SPACING 60 FT					LONG. & ALL-DIR. SEISMIC LOCATION SPACING 70 FT					LONG. & ALL-DIR. SEISMIC LOCATION SPACING 80 FT				
		MAX TRAPEZE SPAN					MAX TRAPEZE SPAN					MAX TRAPEZE SPAN					MAX TRAPEZE SPAN				
		36 IN	54 IN	72 IN	96 IN	120 IN	36 IN	54 IN	72 IN	96 IN	120 IN	36 IN	54 IN	72 IN	96 IN	120 IN	36 IN	54 IN	72 IN	96 IN	120 IN
PIPING/CONDUIT WEIGHT (LBS/FT)	10	A	B	B	D	DD	A	B	B	D	DD	A	B	B	D	DD	A	B	BB	D	DD
	20	B	BB	D	E	EE	B	BB	DD	E	EE	B	BB	DD	EE	EE	B	CC	DD	EE	G
	30	BB	D	E	G	J	BB	D	E	G	J	BB	DD	EE	G	J	BB	DD	EE	G	J
	40	CC	DD	EE	G	J	D	DD	EE	G	J	D	DD	EE	G	J	D	EE	G	J	J
	50	D	EE	G	J	J	D	EE	G	J	J	DD	EE	G	J	J	DD	EE	J	J	J
	60	D	EE	G	J	J	DD	EE	J	J	J	DD	G	J	J	J	DD	G	J	J	J
	70	DD	G	J	J	J	DD	G	J	J	J	DD	G	J	J	J	EE	J	J	J	J
	80	DD	G	J	J	J	DD	J	J	J	J	EE	J	J	J	J	EE	J	J	J	K
	90	EE	J	J	J	J	EE	J	J	J	J	G	J	J	J	K	G	J	J	J	K
	100	EE	J	J	J	J	G	J	J	J	K	G	J	J	J	K	J	J	J	J	K
	150	J	J	J	K	K	J	J	J	K	K	J	J	K	K	K	J	J	K	K	L
	200	J	J	K	K	L	J	J	K	K	L	J	K	K	K	L	J	K	K	L	L
	300	J	K	K	L	L	J	K	L	L	L	K	K	L	L	L	K	K	L	L	L
	400	K	K	L	L	L	K	L	L	L	L	K	L	L	L	L	K	L	L	L	L
	600	K	L	L	L	L	L	L	L	L	L	L	L	L	L	N/A	L	L	L	L	N/A

NOTES:

1. REFER TO PAGE T2.0 FOR GENERAL NOTES.

REVIEWED FOR CODE COMPLIANCE
HCAI
OPM-0043
BY: William Staehlin
DATE: 01/23/2023
CALIFORNIA BUILDING CODE

MASON WEST
1601 E. Miraloma Ave. Placentia, CA 92870
TEL (714) 630 - 0701, www.masonwest.com

Jiefu "Jeff" Zhang, SE
California SE No. S5270

PAGE
T2.2

PIPING/CONDUIT	TRAPEZE SELECTION TABLES	LATERAL FORCE Fp = 0.50g (ASD) VERTICAL FORCE Fpv = 0.375g (ASD)

Fp = 0.5g Fpv = 0.375g		TRAPEZE SIZE DESIGNATION @ ALL-DIRECTIONAL AND LONGITUDINAL SEISMIC BRACE LOCATIONS																			
PIPING/CONDUIT SUPPORT AT 10'-0" MAX.		LONG. & ALL-DIR. SEISMIC LOCATION SPACING 10 FT					LONG. & ALL-DIR. SEISMIC LOCATION SPACING 20 FT					LONG. & ALL-DIR. SEISMIC LOCATION SPACING 30 FT					LONG. & ALL-DIR. SEISMIC LOCATION SPACING 40 FT				
		MAX TRAPEZE SPAN					MAX TRAPEZE SPAN					MAX TRAPEZE SPAN					MAX TRAPEZE SPAN				
		36 IN	54 IN	72 IN	96 IN	120 IN	36 IN	54 IN	72 IN	96 IN	120 IN	36 IN	54 IN	72 IN	96 IN	120 IN	36 IN	54 IN	72 IN	96 IN	120 IN
PIPING/CONDUIT WEIGHT (LBS/FT)	10	A	B	B	D	D	A	B	B	D	D	A	B	B	D	D	A	B	B	D	DD
	20	B	B	D	DD	E	B	B	D	E	E	B	BB	D	E	EE	B	BB	D	E	EE
	30	B	D	D	E	J	B	D	DD	E	J	B	D	E	EE	J	BB	D	E	EE	J
	40	B	D	E	E	J	B	D	E	EE	J	BB	DD	EE	G	J	D	DD	EE	G	J
	50	BB	D	E	J	J	D	DD	EE	J	J	D	DD	EE	J	J	D	EE	G	J	J
	60	D	DD	EE	J	J	D	E	G	J	J	D	EE	G	J	J	DD	EE	G	J	J
	70	D	E	G	J	J	D	EE	G	J	J	DD	EE	G	J	J	DD	G	J	J	J
	80	D	E	J	J	J	D	EE	J	J	J	DD	G	J	J	J	DD	G	J	J	J
	90	D	EE	J	J	J	DD	G	J	J	J	DD	G	J	J	J	EE	J	J	J	J
	100	D	G	J	J	J	DD	G	J	J	J	EE	G	J	J	J	G	J	J	J	J
	150	G	J	J	J	K	G	J	J	J	K	G	J	J	K	K	J	J	J	K	K
	200	G	J	J	K	K	G	J	J	K	K	J	J	K	K	K	J	J	K	K	L
	300	J	J	K	K	L	J	J	K	K	L	J	K	K	L	L	J	K	K	L	L
	400	J	J	K	K	L	J	K	K	L	L	K	K	L	L	L	K	K	L	L	L
	600	J	K	L	L	L	K	K	L	L	L	K	L	L	L	L	K	L	L	L	L

Fp = 0.5g Fpv = 0.375g		TRAPEZE SIZE DESIGNATION @ ALL-DIRECTIONAL AND LONGITUDINAL SEISMIC BRACE LOCATIONS																			
PIPING/CONDUIT SUPPORT AT 10'-0" MAX.		LONG. & ALL-DIR. SEISMIC LOCATION SPACING 50 FT					LONG. & ALL-DIR. SEISMIC LOCATION SPACING 60 FT					LONG. & ALL-DIR. SEISMIC LOCATION SPACING 70 FT					LONG. & ALL-DIR. SEISMIC LOCATION SPACING 80 FT				
		MAX TRAPEZE SPAN					MAX TRAPEZE SPAN					MAX TRAPEZE SPAN					MAX TRAPEZE SPAN				
		36 IN	54 IN	72 IN	96 IN	120 IN	36 IN	54 IN	72 IN	96 IN	120 IN	36 IN	54 IN	72 IN	96 IN	120 IN	36 IN	54 IN	72 IN	96 IN	120 IN
PIPING/CONDUIT WEIGHT (LBS/FT)	10	A	B	B	D	DD	A	B	BB	D	DD	AA	B	BB	D	E	AA	B	BB	DD	E
	20	B	BB	D	E	EE	B	CC	DD	EE	G	B	BB	DD	EE	G	BB	D	DD	EE	G
	30	BB	D	E	G	J	BB	DD	EE	G	J	BB	DD	EE	G	J	CC	DD	EE	J	J
	40	CC	DD	EE	G	J	D	EE	G	J	J	DD	EE	G	J	J	DD	EE	G	J	J
	50	D	EE	G	J	J	DD	EE	J	J	J	DD	G	J	J	J	DD	G	J	J	J
	60	D	EE	G	J	J	DD	G	J	J	J	DD	J	J	J	J	EE	J	J	J	J
	70	DD	G	J	J	J	EE	G	J	J	J	EE	J	J	J	J	G	J	J	J	K
	80	DD	G	J	J	J	EE	J	J	J	K	G	J	J	J	K	G	J	J	K	K
	90	EE	J	J	J	J	G	J	J	J	K	J	J	J	J	K	J	J	J	K	K
	100	EE	J	J	J	J	J	J	J	K	K	J	J	J	J	K	J	J	J	K	K
	150	J	J	J	K	K	J	J	K	K	L	J	J	K	K	L	J	K	K	K	L
	200	J	J	K	K	L	J	K	K	L	L	J	K	K	L	L	J	K	K	L	L
	300	J	K	K	L	L	K	K	L	L	L	K	L	L	L	L	K	L	L	L	L
	400	K	K	L	L	L	K	L	L	L	L	K	L	L	L	L	K	L	L	L	L
	600	K	L	L	L	N/A	L	L	L	L	N/A	L	L	L	N/A	N/A	L	L	L	N/A	N/A

NOTES:

1. REFER TO PAGE T2.0 FOR GENERAL NOTES.

REVIEWED FOR CODE COMPLIANCE BY: HCAI OPM-0043 DATE: 01/23/2023 CALIFORNIA BUILDING CODE

MASON WEST
1601 E. Miraloma Ave. Placentia, CA 92870
TEL (714) 630 - 0701, www.masonwest.com

Jiefu "Jeff" Zhang, SE
California SE No. S5270

PAGE
T2.3

PIPING/CONDUIT

TRAPEZE SELECTION TABLES

LATERAL FORCE
Fp = 0.625g (ASD)
VERTICAL FORCE
Fpv = 0.375g (ASD)

Fp = 0.625g Fpv = 0.375g		TRAPEZE SIZE DESIGNATION @ ALL-DIRECTIONAL AND LONGITUDINAL SEISMIC BRACE LOCATIONS																			
PIPING/CONDUIT SUPPORT AT 10'-0" MAX.		LONG. & ALL-DIR. SEISMIC LOCATION SPACING 10 FT					LONG. & ALL-DIR. SEISMIC LOCATION SPACING 20 FT					LONG. & ALL-DIR. SEISMIC LOCATION SPACING 30 FT					LONG. & ALL-DIR. SEISMIC LOCATION SPACING 40 FT				
		MAX TRAPEZE SPAN					MAX TRAPEZE SPAN					MAX TRAPEZE SPAN					MAX TRAPEZE SPAN				
		36 IN	54 IN	72 IN	96 IN	120 IN	36 IN	54 IN	72 IN	96 IN	120 IN	36 IN	54 IN	72 IN	96 IN	120 IN	36 IN	54 IN	72 IN	96 IN	120 IN
PIPING/CONDUIT WEIGHT (LBS/FT)	10	A	B	B	D	D	A	B	B	D	D	A	B	B	D	DD	A	B	B	D	DD
	20	B	B	D	E	E	B	B	D	E	E	B	BB	D	E	EE	B	BB	DD	EE	EE
	30	B	D	D	E	J	B	D	DD	EE	J	BB	D	E	EE	J	BB	DD	EE	G	J
	40	B	D	E	EE	J	BB	D	E	G	J	CC	DD	EE	G	J	D	DD	EE	G	J
	50	D	D	E	J	J	D	DD	EE	J	J	D	EE	G	J	J	D	EE	G	J	J
	60	D	DD	EE	J	J	D	EE	G	J	J	D	EE	G	J	J	DD	G	J	J	J
	70	D	E	G	J	J	D	EE	G	J	J	DD	G	J	J	J	DD	G	J	J	J
	80	D	EE	J	J	J	DD	G	J	J	J	DD	G	J	J	J	EE	J	J	J	J
	90	D	EE	J	J	J	DD	G	J	J	J	EE	J	J	J	J	G	J	J	J	K
	100	D	G	J	J	J	DD	G	J	J	J	EE	J	J	J	J	G	J	J	J	K
	150	G	J	J	J	K	G	J	J	J	K	J	J	J	K	K	J	J	K	K	K
	200	G	J	J	K	K	J	J	J	K	K	J	J	K	K	L	J	K	K	K	L
	300	J	J	K	K	L	J	K	K	K	L	J	K	K	L	L	K	K	L	L	L
	400	J	K	K	K	L	J	K	K	L	L	K	K	L	L	L	K	L	L	L	L
	600	K	K	L	L	L	K	L	L	L	L	K	L	L	L	L	L	L	L	L	N/A

Fp = 0.625g Fpv = 0.375g		TRAPEZE SIZE DESIGNATION @ ALL-DIRECTIONAL AND LONGITUDINAL SEISMIC BRACE LOCATIONS																			
PIPING/CONDUIT SUPPORT AT 10'-0" MAX.		LONG. & ALL-DIR. SEISMIC LOCATION SPACING 50 FT					LONG. & ALL-DIR. SEISMIC LOCATION SPACING 60 FT					LONG. & ALL-DIR. SEISMIC LOCATION SPACING 70 FT					LONG. & ALL-DIR. SEISMIC LOCATION SPACING 80 FT				
		MAX TRAPEZE SPAN					MAX TRAPEZE SPAN					MAX TRAPEZE SPAN					MAX TRAPEZE SPAN				
		36 IN	54 IN	72 IN	96 IN	120 IN	36 IN	54 IN	72 IN	96 IN	120 IN	36 IN	54 IN	72 IN	96 IN	120 IN	36 IN	54 IN	72 IN	96 IN	120 IN
PIPING/CONDUIT WEIGHT (LBS/FT)	10	A	B	BB	D	DD	AA	B	BB	D	E	AA	B	BB	DD	EE	AA	B	BB	DD	EE
	20	B	CC	DD	EE	G	BB	CC	DD	EE	G	BB	D	DD	EE	G	BB	DD	EE	G	J
	30	BB	DD	EE	G	J	CC	DD	EE	G	J	D	DD	EE	J	J	D	EE	G	J	J
	40	D	EE	G	J	J	DD	EE	G	J	J	DD	G	J	J	J	DD	G	J	J	J
	50	DD	EE	J	J	J	DD	G	J	J	J	DD	G	J	J	J	DD	J	J	J	J
	60	DD	G	J	J	J	DD	J	J	J	J	EE	J	J	J	K	G	J	J	J	K
	70	EE	J	J	J	J	EE	J	J	J	K	G	J	J	J	K	J	J	J	K	K
	80	G	J	J	J	K	G	J	J	J	K	J	J	J	K	K	J	J	J	K	K
	90	G	J	J	J	K	J	J	J	K	K	J	J	J	K	K	J	J	K	K	K
	100	J	J	J	K	K	J	J	J	K	K	J	J	K	K	K	J	J	K	K	K
	150	J	J	K	K	L	J	K	K	K	L	J	K	K	L	L	J	K	K	L	L
	200	J	K	K	L	L	J	K	K	L	L	K	K	L	L	L	K	K	L	L	L
	300	K	K	L	L	L	K	L	L	L	L	K	L	L	L	L	K	L	L	L	L
	400	K	L	L	L	L	K	L	L	L	L	L	L	L	L	N/A	L	L	L	L	N/A
	600	L	L	L	L	N/A	L	L	L	N/A	N/A	L	L	L	N/A	N/A	L	L	N/A	N/A	N/A

NOTES:

1. REFER TO PAGE T2.0 FOR GENERAL NOTES.

REVIEWED FOR CODE COMPLIANCE BY: William Staehlin DATE: 01/23/2023 OPM-0043 HCAI CALIFORNIA BUILDING CODE

MASON WEST
1601 E. Miraloma Ave. Placentia, CA 92870
TEL (714) 630 - 0701, www.masonwest.com

Jiefu "Jeff" Zhang, SE
California SE No. S5270

PAGE
T2.4

PIPING/CONDUIT	TRAPEZE SELECTION TABLES	LATERAL FORCE Fp = 0.75g (ASD) VERTICAL FORCE Fpv = 0.375g (ASD)

Fp = 0.75g Fpv = 0.375g		TRAPEZE SIZE DESIGNATION @ ALL-DIRECTIONAL AND LONGITUDINAL SEISMIC BRACE LOCATIONS																			
PIPING/CONDUIT SUPPORT AT 10'-0" MAX.		LONG. & ALL-DIR. SEISMIC LOCATION SPACING 10 FT					LONG. & ALL-DIR. SEISMIC LOCATION SPACING 20 FT					LONG. & ALL-DIR. SEISMIC LOCATION SPACING 30 FT					LONG. & ALL-DIR. SEISMIC LOCATION SPACING 40 FT				
		MAX TRAPEZE SPAN					MAX TRAPEZE SPAN					MAX TRAPEZE SPAN					MAX TRAPEZE SPAN				
		36 IN	54 IN	72 IN	96 IN	120 IN	36 IN	54 IN	72 IN	96 IN	120 IN	36 IN	54 IN	72 IN	96 IN	120 IN	36 IN	54 IN	72 IN	96 IN	120 IN
PIPING/CONDUIT WEIGHT (LBS/FT)	10	A	B	B	D	D	A	B	B	D	D	A	B	B	D	DD	A	B	BB	D	DD
	20	B	B	D	E	E	B	BB	D	E	EE	B	BB	D	E	EE	B	CC	DD	EE	G
	30	B	D	DD	E	J	B	D	E	EE	J	BB	D	E	EE	J	BB	DD	EE	G	J
	40	B	D	E	EE	J	BB	DD	EE	G	J	D	DD	EE	G	J	D	EE	G	J	J
	50	D	D	E	J	J	D	DD	EE	J	J	D	EE	G	J	J	DD	EE	J	J	J
	60	D	DD	EE	J	J	D	EE	G	J	J	DD	EE	J	J	J	DD	G	J	J	J
	70	D	E	G	J	J	DD	EE	G	J	J	DD	G	J	J	J	EE	J	J	J	J
	80	D	EE	J	J	J	DD	G	J	J	J	DD	J	J	J	J	EE	J	J	J	K
	90	D	G	J	J	J	DD	G	J	J	J	EE	J	J	J	J	G	J	J	J	K
	100	DD	G	J	J	J	EE	G	J	J	J	G	J	J	J	K	J	J	J	K	K
	150	G	J	J	J	K	G	J	J	K	K	J	J	J	K	K	J	J	K	K	L
	200	G	J	J	K	K	J	J	K	K	K	J	J	K	K	L	J	K	K	L	L
	300	J	J	K	K	L	J	K	K	L	L	J	K	L	L	L	K	K	L	L	L
	400	J	K	K	L	L	K	K	L	L	L	K	L	L	L	L	K	L	L	L	L
	600	K	K	L	L	L	K	L	L	L	L	L	L	L	L	L	L	L	L	L	N/A

Fp = 0.75g Fpv = 0.375g		TRAPEZE SIZE DESIGNATION @ ALL-DIRECTIONAL AND LONGITUDINAL SEISMIC BRACE LOCATIONS																			
PIPING/CONDUIT SUPPORT AT 10'-0" MAX.		LONG. & ALL-DIR. SEISMIC LOCATION SPACING 50 FT					LONG. & ALL-DIR. SEISMIC LOCATION SPACING 60 FT					LONG. & ALL-DIR. SEISMIC LOCATION SPACING 70 FT					LONG. & ALL-DIR. SEISMIC LOCATION SPACING 80 FT				
		MAX TRAPEZE SPAN					MAX TRAPEZE SPAN					MAX TRAPEZE SPAN					MAX TRAPEZE SPAN				
		36 IN	54 IN	72 IN	96 IN	120 IN	36 IN	54 IN	72 IN	96 IN	120 IN	36 IN	54 IN	72 IN	96 IN	120 IN	36 IN	54 IN	72 IN	96 IN	120 IN
PIPING/CONDUIT WEIGHT (LBS/FT)	10	AA	B	BB	DD	E	AA	B	BB	DD	EE	AA	BB	BB	DD	EE	AA	BB	CC	DD	EE
	20	BB	CC	DD	EE	G	BB	D	EE	EE	G	BB	DD	EE	G	J	BB	DD	EE	G	J
	30	CC	DD	EE	G	J	D	DD	EE	J	J	DD	EE	G	J	J	DD	EE	J	J	J
	40	DD	EE	G	J	J	DD	EE	J	J	J	DD	G	J	J	J	DD	J	J	J	J
	50	DD	G	J	J	J	DD	J	J	J	J	EE	J	J	J	J	EE	J	J	J	K
	60	DD	J	J	J	J	EE	J	J	J	K	G	J	J	J	K	J	J	J	K	K
	70	EE	J	J	J	K	G	J	J	J	K	J	J	J	K	K	J	J	J	K	K
	80	G	J	J	J	K	J	J	J	K	K	J	J	J	K	K	J	J	K	K	K
	90	J	J	J	K	K	J	J	J	K	K	J	J	K	K	K	J	J	K	K	L
	100	J	J	J	K	K	J	J	K	K	K	J	J	K	K	L	J	J	K	K	L
	150	J	K	K	K	L	J	K	K	L	L	J	K	K	L	L	J	K	L	L	L
	200	J	K	K	L	L	K	K	L	L	L	K	K	L	L	L	K	L	L	L	L
	300	K	L	L	L	L	K	L	L	L	L	K	L	L	L	L	L	L	L	L	L
	400	K	L	L	L	L	L	L	L	L	N/A	L	L	L	L	N/A	L	L	L	N/A	N/A
	600	L	L	L	N/A	N/A	L	L	L	N/A	N/A	L	L	N/A	N/A	N/A	L	L	N/A	N/A	N/A

NOTES:

1. REFER TO PAGE T2.0 FOR GENERAL NOTES.

REVIEWED FOR CODE COMPLIANCE
HCAI
OPM-0043
BY: William Staehlin
DATE: 01/23/2023
CALIFORNIA BUILDING CODE 2022

MASON WEST
1601 E. Miraloma Ave. Placentia, CA 92870
TEL (714) 630 - 0701, www.masonwest.com

Jiefu "Jeff" Zhang, SE
California SE No. S5270

PIPING/CONDUIT	TRAPEZE SELECTION TABLES	LATERAL FORCE Fp = 0.875g (ASD) VERTICAL FORCE Fpv = 0.375g (ASD)

Fp = 0.875g Fpv = 0.375g		TRAPEZE SIZE DESIGNATION @ ALL-DIRECTIONAL AND LONGITUDINAL SEISMIC BRACE LOCATIONS																			
PIPING/CONDUIT SUPPORT AT 10'-0" MAX.		LONG. & ALL-DIR. SEISMIC LOCATION SPACING 10 FT					LONG. & ALL-DIR. SEISMIC LOCATION SPACING 20 FT					LONG. & ALL-DIR. SEISMIC LOCATION SPACING 30 FT					LONG. & ALL-DIR. SEISMIC LOCATION SPACING 40 FT				
		MAX TRAPEZE SPAN					MAX TRAPEZE SPAN					MAX TRAPEZE SPAN					MAX TRAPEZE SPAN				
		36 IN	54 IN	72 IN	96 IN	120 IN	36 IN	54 IN	72 IN	96 IN	120 IN	36 IN	54 IN	72 IN	96 IN	120 IN	36 IN	54 IN	72 IN	96 IN	120 IN
PIPING/CONDUIT WEIGHT (LBS/FT)	10	A	B	B	D	D	A	B	B	D	DD	A	B	B	D	DD	AA	B	BB	D	E
	20	B	B	D	E	E	B	BB	D	E	EE	B	BB	DD	EE	EE	B	CC	DD	EE	G
	30	B	D	DD	E	J	B	D	E	EE	J	BB	DD	EE	G	J	BB	DD	EE	G	J
	40	BB	D	E	EE	J	CC	DD	EE	G	J	D	DD	EE	G	J	DD	EE	G	J	J
	50	D	DD	EE	J	J	D	EE	G	J	J	DD	EE	G	J	J	DD	G	J	J	J
	60	D	E	EE	J	J	D	EE	G	J	J	DD	G	J	J	J	DD	J	J	J	J
	70	D	EE	G	J	J	DD	G	J	J	J	DD	G	J	J	J	EE	J	J	J	J
	80	D	EE	J	J	J	DD	G	J	J	J	E	J	J	J	J	G	J	J	J	K
	90	D	G	J	J	J	DD	G	J	J	J	G	J	J	J	K	J	J	J	K	K
	100	DD	G	J	J	J	EE	J	J	J	J	G	J	J	J	K	J	J	J	K	K
	150	G	J	J	J	K	J	J	J	K	K	J	J	K	K	K	J	J	K	K	L
	200	J	J	J	K	K	J	J	K	K	K	J	K	K	K	L	J	K	K	L	L
	300	J	J	K	K	L	J	K	K	L	L	K	K	L	L	L	K	L	L	L	L
	400	J	K	K	L	L	K	K	L	L	L	K	L	L	L	L	K	L	L	L	L
	600	K	K	L	L	L	K	L	L	L	L	L	L	L	L	N/A	L	L	L	N/A	N/A

Fp = 0.875g Fpv = 0.375g		TRAPEZE SIZE DESIGNATION @ ALL-DIRECTIONAL AND LONGITUDINAL SEISMIC BRACE LOCATIONS																			
PIPING/CONDUIT SUPPORT AT 10'-0" MAX.		LONG. & ALL-DIR. SEISMIC LOCATION SPACING 50 FT					LONG. & ALL-DIR. SEISMIC LOCATION SPACING 60 FT					LONG. & ALL-DIR. SEISMIC LOCATION SPACING 70 FT					LONG. & ALL-DIR. SEISMIC LOCATION SPACING 80 FT				
		MAX TRAPEZE SPAN					MAX TRAPEZE SPAN					MAX TRAPEZE SPAN					MAX TRAPEZE SPAN				
		36 IN	54 IN	72 IN	96 IN	120 IN	36 IN	54 IN	72 IN	96 IN	120 IN	36 IN	54 IN	72 IN	96 IN	120 IN	36 IN	54 IN	72 IN	96 IN	120 IN
PIPING/CONDUIT WEIGHT (LBS/FT)	10	AA	B	BB	DD	EE	AA	BB	BB	DD	EE	AA	BB	CC	DD	EE	B	BB	CC	DD	EE
	20	BB	D	DD	EE	G	BB	DD	EE	G	J	BB	DD	EE	G	J	BB	DD	EE	J	J
	30	D	DD	EE	J	J	DD	EE	G	J	J	DD	EE	J	J	J	DD	EE	J	J	J
	40	DD	EE	J	J	J	DD	G	J	J	J	DD	J	J	J	J	EE	J	J	J	J
	50	DD	G	J	J	J	EE	J	J	J	J	EE	J	J	J	K	G	J	J	J	K
	60	EE	J	J	J	K	G	J	J	J	K	J	J	J	K	K	J	J	J	K	K
	70	G	J	J	J	K	J	J	J	K	K	J	J	J	K	K	J	J	K	K	K
	80	J	J	J	K	K	J	J	J	K	K	J	J	K	K	K	J	J	K	K	L
	90	J	J	J	K	K	J	J	K	K	K	J	J	K	K	L	J	J	K	K	L
	100	J	J	K	K	K	J	J	K	K	L	J	J	K	K	L	J	K	K	L	L
	150	J	K	K	L	L	J	K	K	L	L	J	K	L	L	L	K	K	L	L	L
	200	K	K	L	L	L	K	K	L	L	L	K	L	L	L	L	K	L	L	L	L
	300	K	L	L	L	L	K	L	L	L	L	L	L	L	L	N/A	L	L	L	L	N/A
	400	L	L	L	L	N/A	L	L	L	L	N/A	L	L	L	N/A	N/A	L	L	L	N/A	N/A
	600	L	L	L	N/A	N/A	L	L	N/A	N/A	N/A	L	L	N/A	N/A	N/A	L	N/A	N/A	N/A	N/A

NOTES:

1. REFER TO PAGE T2.0 FOR GENERAL NOTES.

REVIEWED FOR CODE COMPLIANCE
HCAI
OPM-0043
BY: William Staehlin
DATE: 01/23/2023
CALIFORNIA BUILDING CODE

MASON WEST
1601 E. Miraloma Ave. Placentia, CA 92870
TEL (714) 630 - 0701, www.masonwest.com

Jiefu "Jeff" Zhang, SE
California SE No. S5270

PAGE
T2.6

PIPING/CONDUIT	TRAPEZE SELECTION TABLES	LATERAL FORCE Fp = 1.00g (ASD) VERTICAL FORCE Fpv = 0.375g (ASD)

Fp = 1g Fpv = 0.375g		TRAPEZE SIZE DESIGNATION @ ALL-DIRECTIONAL AND LONGITUDINAL SEISMIC BRACE LOCATIONS																			
PIPING/CONDUIT SUPPORT AT 10'-0" MAX.		LONG. & ALL-DIR. SEISMIC LOCATION SPACING 10 FT					LONG. & ALL-DIR. SEISMIC LOCATION SPACING 20 FT					LONG. & ALL-DIR. SEISMIC LOCATION SPACING 30 FT					LONG. & ALL-DIR. SEISMIC LOCATION SPACING 40 FT				
		MAX TRAPEZE SPAN					MAX TRAPEZE SPAN					MAX TRAPEZE SPAN					MAX TRAPEZE SPAN				
		36 IN	54 IN	72 IN	96 IN	120 IN	36 IN	54 IN	72 IN	96 IN	120 IN	36 IN	54 IN	72 IN	96 IN	120 IN	36 IN	54 IN	72 IN	96 IN	120 IN
PIPING/CONDUIT WEIGHT (LBS/FT)	10	A	B	B	D	D	A	B	B	D	DD	A	B	BB	D	DD	AA	B	BB	DD	E
	20	B	B	D	E	E	B	BB	D	E	EE	B	CC	DD	EE	G	BB	D	DD	EE	G
	30	B	D	DD	E	J	BB	D	E	EE	J	BB	DD	EE	G	J	CC	DD	EE	J	J
	40	BB	D	E	EE	J	D	DD	EE	G	J	D	EE	G	J	J	DD	EE	G	J	J
	50	D	DD	EE	J	J	D	EE	G	J	J	DD	EE	J	J	J	DD	G	J	J	J
	60	D	E	G	J	J	DD	EE	G	J	J	DD	G	J	J	J	EE	J	J	J	J
	70	D	EE	G	J	J	DD	G	J	J	J	EE	J	J	J	J	G	J	J	J	K
	80	D	EE	J	J	J	DD	G	J	J	J	EE	J	J	J	J	G	J	J	K	K
	90	DD	G	J	J	J	EE	J	J	J	J	G	J	J	J	K	J	J	J	K	K
	100	DD	G	J	J	J	G	J	J	J	J	J	J	J	K	K	J	J	J	K	K
	150	G	J	J	J	K	J	J	J	K	K	J	J	K	K	L	J	K	K	K	L
	200	J	J	J	K	K	J	J	K	K	L	J	K	K	L	L	J	K	K	L	L
	300	J	J	K	K	L	J	K	K	L	L	K	K	L	L	L	K	L	L	L	L
	400	J	K	K	L	L	K	K	L	L	L	K	L	L	L	L	K	L	L	L	L
	600	K	K	L	L	L	K	L	L	L	L	L	L	L	L	N/A	L	L	L	N/A	N/A

Fp = 1g Fpv = 0.375g		TRAPEZE SIZE DESIGNATION @ ALL-DIRECTIONAL AND LONGITUDINAL SEISMIC BRACE LOCATIONS																			
PIPING/CONDUIT SUPPORT AT 10'-0" MAX.		LONG. & ALL-DIR. SEISMIC LOCATION SPACING 50 FT					LONG. & ALL-DIR. SEISMIC LOCATION SPACING 60 FT					LONG. & ALL-DIR. SEISMIC LOCATION SPACING 70 FT					LONG. & ALL-DIR. SEISMIC LOCATION SPACING 80 FT				
		MAX TRAPEZE SPAN					MAX TRAPEZE SPAN					MAX TRAPEZE SPAN					MAX TRAPEZE SPAN				
		36 IN	54 IN	72 IN	96 IN	120 IN	36 IN	54 IN	72 IN	96 IN	120 IN	36 IN	54 IN	72 IN	96 IN	120 IN	36 IN	54 IN	72 IN	96 IN	120 IN
PIPING/CONDUIT WEIGHT (LBS/FT)	10	AA	B	BB	DD	EE	AA	BB	CC	DD	EE	B	BB	CC	DD	EE	B	BB	DD	EE	EE
	20	BB	DD	EE	G	J	BB	DD	EE	G	J	BB	DD	EE	J	J	CC	DD	EE	J	J
	30	D	EE	G	J	J	DD	EE	J	J	J	DD	EE	J	J	J	DD	G	J	J	J
	40	DD	G	J	J	J	DD	J	J	J	J	DD	J	J	J	J	EE	J	J	J	K
	50	DD	J	J	J	J	EE	J	J	J	K	G	J	J	J	K	J	J	J	K	K
	60	G	J	J	J	K	J	J	J	K	K	J	J	J	K	K	J	J	J	K	K
	70	J	J	J	K	K	J	J	J	K	K	J	J	K	K	K	J	J	K	K	L
	80	J	J	J	K	K	J	J	K	K	K	J	J	K	K	L	J	J	K	K	L
	90	J	J	K	K	K	J	J	K	K	L	J	J	K	K	L	J	K	K	L	L
	100	J	J	K	K	K	J	J	K	K	L	J	K	K	L	L	J	K	K	L	L
	150	J	K	K	K	L	J	K	L	L	L	K	K	L	L	L	K	K	L	L	L
	200	K	K	L	L	L	K	L	L	L	L	K	L	L	L	L	K	L	L	L	L
	300	K	L	L	L	L	L	L	L	L	N/A	L	L	L	L	N/A	L	L	L	N/A	N/A
	400	L	L	L	L	N/A	L	L	L	N/A	N/A	L	L	L	N/A	N/A	L	L	N/A	N/A	N/A
	600	L	L	N/A	N/A	N/A	L	L	N/A	N/A	N/A	L	N/A	N/A	N/A	N/A	L	N/A	N/A	N/A	N/A

NOTES:

1. REFER TO PAGE T2.0 FOR GENERAL NOTES.

REVIEWED FOR CODE COMPLIANCE
HCAI
OPM-0043
BY: William Staehlin
DATE: 01/23/2023
CALIFORNIA BUILDING CODE

MASON WEST
1601 E. Miraloma Ave. Placentia, CA 92870
TEL (714) 630 - 0701, www.masonwest.com

Jiefu "Jeff" Zhang, SE
California SE No. S5270

CABLE TRAY

TRAPEZE SELECTION TABLES

VERTICAL FORCE
Fpv = 0.375g (ASD)

Fpv = 0.375g		TRAPEZE SIZE DESIGNATION @ TRANSVERSE SEISMIC BRACE LOCATIONS				
CABLE TRAY SUPPORT AT 10'-0" MAX.		MAX TRAPEZE SPAN				
		18 IN	24 IN	36 IN	48 IN	60 IN
CABLE TRAY WEIGHT (LBS/FT)	10	A	A	A	A	A
	20	A	A	A	A	A
	30	A	A	A	A	A
	40	B	B	B	B	B
	50	B	B	B	B	B
	60	B	B	B	B	B
	70	B	B	B	B	B
	80	B	B	B	B	B
	90	B	B	B	B	B
	100	D	D	D	D	D

NOTES:

1. REFER TO TABLE BELOW FOR TRAPEZE MEMBER SIZE DESIGNATIONS & ALLOWABLE MOMENT CAPACITIES.
2. STEEL ANGLE MAY BE USED IN PLACE OF CHANNEL STRUT. FOR 1⅝"x1⅝"x12 GA SINGLE STRUT, USE L2½x2½x¼. FOR 1⅝"x3¼"x12 GA SINGLE STRUT, USE L3x3x¼. FOR 1⅝"x1⅝"x12 GA SINGLE STRUT CONTRACTOR MAY USE 1⅝x$^{13}/_{16}$x12GA DOUBLE STRUT AS A SUBSTITUTION.
3. TRAPEZE MEMBERS MAY BE PROVIDED WITH ROUND HOLES. REFER TO X7.0 AND X7.1 FOR STRUT MEMBER DATA.
4. MAXIMUM SPAN OF TRAPEZE MEMBER IS MEASURED BETWEEN CENTER OF HANGER RODS.
5. CONTRACTOR MAY USE ANY TRAPEZE MEMBER SIZE LARGER THAN IS TABULATED. FOR EXAMPLE, IF TRAPEZE MEMBER SIZE "A" IS THE MINIMUM REQUIREMENT, THEN TRAPEZE MEMBER AA, B, BB, C, CC, D, DD, E, OR EE CAN ALSO BE USED.
6. WHEN INCREASING DISTANCE FROM EDGE OF CABLE TRAY TO CENTER OF HANGER ROD MORE THAN 6", INCREASE THE WEIGHT PER FOOT BY A FACTOR OF INCREASED EDGE DISTANCE DIVIDED BY 6". FOR EXAMPLE, A 12" CABLE TRAY WEIGHING 9 LB/FT WITH AN EDGE DISTANCE OF 12" MUST INCREASE THE WEIGHT BY A FACTOR OF 2 (12"/6") TO USE THE ABOVE TABLE.

TRAPEZE MEMBER TABLE

		ALLOWABLE MOMENT CAPACITY (KIP-IN)									
		18" SPAN		24" SPAN		36" SPAN		48" SPAN		60" SPAN	
DESIGNATION	SIZE	Mcx	Mcy	Mcx	Mcy	Mcx	Mcy	Mcx	Mcy	Mcx	Mcy
A	13/16 x 1 5/8 x 12GA SINGLE STRUT	1.61	4.33	1.61	4.31	1.61	3.94	1.61	3.58	1.59	3.23
AA	(2) 13/16 x 1 5/8 x 12GA SINGLE STRUT	1.61	8.66	1.61	8.62	1.61	7.88	1.61	7.16	1.59	6.46
B	1 5/8 x 1 5/8 x 12GA SINGLE STRUT	5.19	6.57	5.19	6.57	4.76	6.57	4.39	6.52	4.09	6.23
C	13/16 x 1 5/8 x 12GA DOUBLE STRUT	4.58	8.67	4.58	8.67	4.58	8.50	4.58	8.04	4.58	7.58
BB	(2) 1 5/8 x 1 5/8 x 12GA SINGLE STRUT	5.19	13.14	5.19	13.14	4.76	13.14	4.39	13.04	4.09	12.46
CC	(2) 13/16 x 1 5/8 x 12GA DOUBLE STRUT	4.58	17.34	4.58	17.34	4.58	17.00	4.58	16.08	4.58	15.16
D	1 5/8 x 3 1/4 x 12GA SINGLE STRUT	16.08	11.11	15.61	11.11	13.26	11.11	10.59	11.11	8.03	11.11
E	1 5/8 x 1 5/8 x 12GA DOUBLE STRUT	14.82	13.13	14.82	13.13	14.82	13.13	14.72	13.13	14.09	13.13
DD	(2) 1 5/8 x 3 1/4 x 12GA SINGLE STRUT	16.08	22.22	15.61	22.22	13.26	22.22	10.59	22.22	8.03	22.22
EE	(2) 1 5/8 x 1 5/8 x 12GA DOUBLE STRUT	14.82	26.26	14.82	26.26	14.82	26.26	14.72	26.26	14.09	26.26

REVIEWED FOR CODE COMPLIANCE
OPM-0043
Reviewed by: William Staehlin
DATE: 01/23/2023
CALIFORNIA BUILDING CODE, 2022

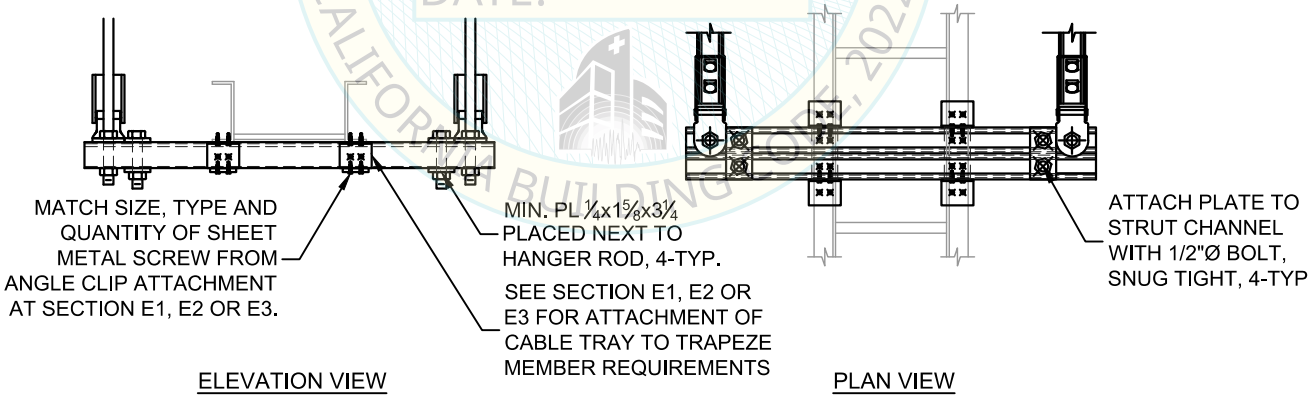

(2) TRAPEZE MEMBER INSTALLATION DETAIL FOR
TRAPEZE MEMBER DESIGNATION AA, BB, CC, DD & EE

MASON WEST
1601 E. Miraloma Ave. Placentia, CA 92870
TEL (714) 630 - 0701, www.masonwest.com

Jiefu "Jeff" Zhang, SE
California SE No. S5270

PAGE
T3.0

CABLE TRAY	TRAPEZE SELECTION TABLES	LATERAL FORCE Fp = 0.25g (ASD) VERTICAL FORCE Fpv = 0.375g (ASD)

Fp = 0.25g Fpv = 0.375g		TRAPEZE SIZE DESIGNATION @ ALL-DIRECTIONAL AND LONGITUDINAL SEISMIC BRACE LOCATIONS																			
CABLE TRAY SUPPORT AT 10'-0" MAX.		LONG. & ALL-DIR. SEISMIC LOCATION SPACING 10 FT					LONG. & ALL-DIR. SEISMIC LOCATION SPACING 20 FT					LONG. & ALL-DIR. SEISMIC LOCATION SPACING 30 FT					LONG. & ALL-DIR. SEISMIC LOCATION SPACING 40 FT				
		MAX TRAPEZE SPAN					MAX TRAPEZE SPAN					MAX TRAPEZE SPAN					MAX TRAPEZE SPAN				
		18 IN	24 IN	36 IN	48 IN	60 IN	18 IN	24 IN	36 IN	48 IN	60 IN	18 IN	24 IN	36 IN	48 IN	60 IN	18 IN	24 IN	36 IN	48 IN	60 IN
CABLE TRAY WEIGHT (LBS/FT)	10	A	A	A	A	A	A	A	A	A	A	A	A	A	A	A	A	A	A	A	A
	20	A	A	A	A	A	A	A	A	A	A	A	A	A	A	A	A	A	A	A	A
	30	A	A	A	A	A	A	A	A	A	A	A	A	A	A	A	A	A	A	AA	AA
	40	B	B	B	B	B	B	B	B	B	B	B	B	B	B	B	B	B	B	B	B
	50	B	B	B	B	B	B	B	B	B	B	B	B	B	B	B	B	B	B	B	B
	60	B	B	B	B	B	B	B	B	B	B	B	B	B	B	B	B	B	B	B	B
	70	B	B	B	B	B	B	B	B	B	B	B	B	B	B	B	B	B	B	B	BB
	80	B	B	B	B	B	B	B	B	B	B	B	B	B	C	C	C	C	BB	BB	BB
	90	B	B	B	B	C	B	B	B	C	C	BB	BB	BB	CC	CC	CC	CC	CC	CC	CC
	100	D	D	D	D	D	D	D	D	D	D	D	D	D	D	D	D	D	D	D	E

Fp = 0.25g Fpv = 0.375g		TRAPEZE SIZE DESIGNATION @ ALL-DIRECTIONAL AND LONGITUDINAL SEISMIC BRACE LOCATIONS																			
CABLE TRAY SUPPORT AT 10'-0" MAX.		LONG. & ALL-DIR. SEISMIC LOCATION SPACING 50 FT					LONG. & ALL-DIR. SEISMIC LOCATION SPACING 60 FT					LONG. & ALL-DIR. SEISMIC LOCATION SPACING 70 FT					LONG. & ALL-DIR. SEISMIC LOCATION SPACING 80 FT				
		MAX TRAPEZE SPAN					MAX TRAPEZE SPAN					MAX TRAPEZE SPAN					MAX TRAPEZE SPAN				
		18 IN	24 IN	36 IN	48 IN	60 IN	18 IN	24 IN	36 IN	48 IN	60 IN	18 IN	24 IN	36 IN	48 IN	60 IN	18 IN	24 IN	36 IN	48 IN	60 IN
CABLE TRAY WEIGHT (LBS/FT)	10	A	A	A	A	A	A	A	A	A	A	A	A	A	A	A	A	A	A	A	A
	20	A	A	A	A	A	A	A	A	A	A	A	A	A	A	A	A	A	A	A	A
	30	AA	AA	AA	AA	AA	AA	AA	AA	AA	AA	AA	AA	AA	AA	B	B	B	B	B	B
	40	B	B	B	B	B	B	B	B	B	B	B	B	B	B	B	B	B	B	B	B
	50	B	B	B	B	B	B	B	B	B	B	B	B	B	B	B	B	B	B	B	B
	60	B	B	B	B	B	B	B	B	B	C	B	B	B	C	C	C	C	C	C	BB
	70	B	B	C	C	C	C	C	BB	BB	BB	BB	BB	BB	BB	CC	CC	CC	CC	CC	CC
	80	BB	BB	BB	BB	CC	BB	BB	BB	CC	CC	BB	BB	CC	CC	CC	CC	CC	D	D	D
	90	D	D	D	D	D	D	D	D	D	D	D	D	D	D	D	D	D	D	D	D
	100	D	D	D	D	E	D	D	D	E	E	D	D	E	E	E	E	E	E	E	E

REVIEWED FOR CODE COMPLIANCE
OPM-0043
BY William Staehlin
DATE 01/23/2023
CALIFORNIA BUILDING CODE, 2022

NOTES:

1. REFER TO PAGE T3.0 FOR TRAPEZE MEMBER SIZE DESIGNATIONS & ALLOWABLE MOMENT CAPACITIES .
2. STEEL ANGLE MAY BE USED IN PLACE OF CHANNEL STRUT. FOR 1⅝"x1⅝"x12 GA SINGLE STRUT, USE L2½x2½x¼. FOR 1⅝"x3¼"x12 GA SINGLE STRUT, USE L3x3x¼. FOR 1⅝"x1⅝"x12 GA SINGLE STRUT CONTRACTOR MAY USE 1⅝x$^{13}/_{16}$x12GA DOUBLE STRUT AS A SUBSTITUTION.
3. TRAPEZE MEMBERS MAY BE PROVIDED WITH ROUND HOLES. REFER TO X7.0 AND X7.1 FOR STRUT MEMBER DATA.
4. MAXIMUM SPAN OF TRAPEZE MEMBER IS MEASURED BETWEEN CENTER OF HANGER RODS.
5. CONTRACTOR MAY USE ANY TRAPEZE MEMBER SIZE LARGER THAN IS TABULATED. FOR EXAMPLE, IF TRAPEZE MEMBER SIZE "A" IS THE MINIMUM REQUIREMENT, THEN TRAPEZE MEMBER B, BB, C, CC, D, DD, E, OR EE CAN ALSO BE USED.
6. WHEN INCREASING DISTANCE FROM EDGE OF CABLE TRAY TO CENTER OF HANGER ROD MORE THAN 6", INCREASE THE WEIGHT PER FOOT BY A FACTOR OF INCREASED EDGE DISTANCE DIVIDED BY 6". FOR EXAMPLE, A 12" CABLE TRAY WEIGHING 9 LB/FT WITH AN EDGE DISTANCE OF 12" MUST INCREASE THE WEIGHT BY A FACTOR OF 2 (12"/6") TO USE THE ABOVE TABLE.

MASON WEST
1601 E. Miraloma Ave. Placentia, CA 92870
TEL (714) 630 - 0701, www.masonwest.com

Jiefu "Jeff" Zhang, SE
California SE No. S5270

PAGE
T3.1

CABLE TRAY	TRAPEZE SELECTION TABLES	LATERAL FORCE Fp = 0.375g (ASD) VERTICAL FORCE Fpv = 0.375g (ASD)

Fp = 0.375g Fpv = 0.375g		TRAPEZE SIZE DESIGNATION @ ALL-DIRECTIONAL AND LONGITUDINAL SEISMIC BRACE LOCATIONS																			
CABLE TRAY SUPPORT AT 10'-0" MAX.		LONG. & ALL-DIR. SEISMIC LOCATION SPACING 10 FT					LONG. & ALL-DIR. SEISMIC LOCATION SPACING 20 FT					LONG. & ALL-DIR. SEISMIC LOCATION SPACING 30 FT					LONG. & ALL-DIR. SEISMIC LOCATION SPACING 40 FT				
		MAX TRAPEZE SPAN					MAX TRAPEZE SPAN					MAX TRAPEZE SPAN					MAX TRAPEZE SPAN				
		18 IN	24 IN	36 IN	48 IN	60 IN	18 IN	24 IN	36 IN	48 IN	60 IN	18 IN	24 IN	36 IN	48 IN	60 IN	18 IN	24 IN	36 IN	48 IN	60 IN
CABLE TRAY WEIGHT (LBS/FT)	10	A	A	A	A	A	A	A	A	A	A	A	A	A	A	A	A	A	A	A	A
	20	A	A	A	A	A	A	A	A	A	A	A	A	A	A	A	A	A	A	A	A
	30	A	A	A	A	A	A	A	A	A	A	AA	AA	AA	AA	AA	AA	AA	AA	AA	AA
	40	B	B	B	B	B	B	B	B	B	B	B	B	B	B	B	B	B	B	B	B
	50	B	B	B	B	B	B	B	B	B	B	B	B	B	B	B	B	B	B	B	B
	60	B	B	B	B	B	B	B	B	B	B	B	B	B	B	B	B	B	B	B	C
	70	B	B	B	B	B	B	B	B	B	B	B	B	B	C	C	C	C	BB	BB	BB
	80	B	B	B	B	B	B	B	B	C	C	BB	BB	BB	BB	CC	BB	BB	BB	CC	CC
	90	B	B	B	C	C	BB	BB	BB	CC	CC	BB	BB	CC	CC	D	D	D	D	D	D
	100	D	D	D	D	D	D	D	D	D	D	D	D	D	D	E	D	D	D	E	E

Fp = 0.375g Fpv = 0.375g		TRAPEZE SIZE DESIGNATION @ ALL-DIRECTIONAL AND LONGITUDINAL SEISMIC BRACE LOCATIONS																			
CABLE TRAY SUPPORT AT 10'-0" MAX.		LONG. & ALL-DIR. SEISMIC LOCATION SPACING 50 FT					LONG. & ALL-DIR. SEISMIC LOCATION SPACING 60 FT					LONG. & ALL-DIR. SEISMIC LOCATION SPACING 70 FT					LONG. & ALL-DIR. SEISMIC LOCATION SPACING 80 FT				
		MAX TRAPEZE SPAN					MAX TRAPEZE SPAN					MAX TRAPEZE SPAN					MAX TRAPEZE SPAN				
		18 IN	24 IN	36 IN	48 IN	60 IN	18 IN	24 IN	36 IN	48 IN	60 IN	18 IN	24 IN	36 IN	48 IN	60 IN	18 IN	24 IN	36 IN	48 IN	60 IN
CABLE TRAY WEIGHT (LBS/FT)	10	A	A	A	A	A	A	A	A	A	A	A	A	A	A	A	A	A	A	A	A
	20	A	A	A	A	A	A	A	A	A	A	A	A	A	A	AA	A	A	A	AA	AA
	30	AA	AA	AA	B	B	B	B	B	B	B	B	B	B	B	B	B	B	B	B	B
	40	B	B	B	B	B	B	B	B	B	B	B	B	B	B	B	B	B	B	B	B
	50	B	B	B	B	B	B	B	B	B	C	B	B	C	C	C	C	C	C	BB	BB
	60	B	B	C	C	C	BB	BB	BB	BB	BB	BB	BB	BB	BB	BB	BB	BB	BB	BB	CC
	70	BB	BB	BB	BB	CC	BB	BB	BB	CC	CC	BB	BB	CC	CC	CC	CC	CC	D	D	D
	80	BB	BB	CC	D	D	D	D	D	D	D	D	D	D	D	D	D	D	D	D	E
	90	D	D	D	D	D	D	D	D	D	E	D	D	D	D	E	D	D	E	E	E
	100	D	E	E	E	E	DD	DD	DD	DD	EE	DD	DD	DD	DD	EE	EE	EE	EE	EE	EE

REVIEWED FOR CODE COMPLIANCE
OPM-0043
REVIEWED BY William Staehlin
DATE 01/23/2023
CALIFORNIA BUILDING CODE, 2022

NOTES:

1. REFER TO PAGE T3.0 FOR TRAPEZE MEMBER SIZE DESIGNATIONS & ALLOWABLE MOMENT CAPACITIES .
2. STEEL ANGLE MAY BE USED IN PLACE OF CHANNEL STRUT. FOR 1⅝"x1⅝"x12 GA SINGLE STRUT, USE L2½x2½x¼. FOR 1⅝"x3¼"x12 GA SINGLE STRUT, USE L3x3x¼. FOR 1⅝"x1⅝"x12 GA SINGLE STRUT CONTRACTOR MAY USE 1⅝x1 3/16x12GA DOUBLE STRUT AS A SUBSTITUTION.
3. TRAPEZE MEMBERS MAY BE PROVIDED WITH ROUND HOLES. REFER TO X7.0 AND X7.1 FOR STRUT MEMBER DATA.
4. MAXIMUM SPAN OF TRAPEZE MEMBER IS MEASURED BETWEEN CENTER OF HANGER RODS.
5. CONTRACTOR MAY USE ANY TRAPEZE MEMBER SIZE LARGER THAN IS TABULATED. FOR EXAMPLE, IF TRAPEZE MEMBER SIZE "A" IS THE MINIMUM REQUIREMENT, THEN TRAPEZE MEMBER B, BB, C, CC, D, DD, E, OR EE CAN ALSO BE USED.
6. WHEN INCREASING DISTANCE FROM EDGE OF CABLE TRAY TO CENTER OF HANGER ROD MORE THAN 6", INCREASE THE WEIGHT PER FOOT BY A FACTOR OF INCREASED EDGE DISTANCE DIVIDED BY 6". FOR EXAMPLE, A 12" CABLE TRAY WEIGHING 9 LB/FT WITH AN EDGE DISTANCE OF 12" MUST INCREASE THE WEIGHT BY A FACTOR OF 2 (12"/6") TO USE THE ABOVE TABLE.

MASON WEST
1601 E. Miraloma Ave. Placentia, CA 92870
TEL (714) 630 - 0701, www.masonwest.com

Jiefu "Jeff" Zhang, SE
California SE No. S5270

PAGE
T3.2

CABLE TRAY	TRAPEZE SELECTION TABLES	LATERAL FORCE Fp = 0.50g (ASD) VERTICAL FORCE Fpv = 0.375g (ASD)

Fp = 0.5g Fpv = 0.375g		TRAPEZE SIZE DESIGNATION @ ALL-DIRECTIONAL AND LONGITUDINAL SEISMIC BRACE LOCATIONS																			
CABLE TRAY SUPPORT AT 10'-0" MAX.		LONG. & ALL-DIR. SEISMIC LOCATION SPACING 10 FT					LONG. & ALL-DIR. SEISMIC LOCATION SPACING 20 FT					LONG. & ALL-DIR. SEISMIC LOCATION SPACING 30 FT					LONG. & ALL-DIR. SEISMIC LOCATION SPACING 40 FT				
		MAX TRAPEZE SPAN					MAX TRAPEZE SPAN					MAX TRAPEZE SPAN					MAX TRAPEZE SPAN				
		18 IN	24 IN	36 IN	48 IN	60 IN	18 IN	24 IN	36 IN	48 IN	60 IN	18 IN	24 IN	36 IN	48 IN	60 IN	18 IN	24 IN	36 IN	48 IN	60 IN
CABLE TRAY WEIGHT (LBS/FT)	10	A	A	A	A	A	A	A	A	A	A	A	A	A	A	A	A	A	A	A	A
	20	A	A	A	A	A	A	A	A	A	A	A	A	A	A	A	A	A	A	A	A
	30	A	A	A	A	A	A	A	A	AA	AA	AA	AA	AA	AA	AA	AA	AA	AA	B	B
	40	B	B	B	B	B	B	B	B	B	B	B	B	B	B	B	B	B	B	B	B
	50	B	B	B	B	B	B	B	B	B	B	B	B	B	B	B	B	B	B	B	B
	60	B	B	B	B	B	B	B	B	B	B	B	B	B	B	C	C	C	C	CC	CC
	70	B	B	B	B	B	B	B	B	B	C	C	C	BB	BB	BB	BB	BB	BB	BB	CC
	80	B	B	B	B	B	C	C	BB	BB	BB	BB	BB	BB	CC	CC	CC	CC	D	D	D
	90	B	B	B	C	C	BB	BB	BB	CC	CC	D	D	D	D	D	D	D	D	D	D
	100	D	D	D	D	D	D	D	D	D	E	D	D	D	E	E	E	E	E	E	E

Fp = 0.5g Fpv = 0.375g		TRAPEZE SIZE DESIGNATION @ ALL-DIRECTIONAL AND LONGITUDINAL SEISMIC BRACE LOCATIONS																			
CABLE TRAY SUPPORT AT 10'-0" MAX.		LONG. & ALL-DIR. SEISMIC LOCATION SPACING 50 FT					LONG. & ALL-DIR. SEISMIC LOCATION SPACING 60 FT					LONG. & ALL-DIR. SEISMIC LOCATION SPACING 70 FT					LONG. & ALL-DIR. SEISMIC LOCATION SPACING 80 FT				
		MAX TRAPEZE SPAN					MAX TRAPEZE SPAN					MAX TRAPEZE SPAN					MAX TRAPEZE SPAN				
		18 IN	24 IN	36 IN	48 IN	60 IN	18 IN	24 IN	36 IN	48 IN	60 IN	18 IN	24 IN	36 IN	48 IN	60 IN	18 IN	24 IN	36 IN	48 IN	60 IN
CABLE TRAY WEIGHT (LBS/FT)	10	A	A	A	A	A	A	A	A	A	A	A	A	A	A	A	A	A	A	A	A
	20	A	A	A	A	A	A	A	A	AA	AA	A	A	AA	AA	AA	AA	AA	AA	AA	AA
	30	B	B	B	B	B	B	B	B	B	B	B	B	B	B	B	B	B	B	B	B
	40	B	B	B	B	B	B	B	B	B	B	B	B	B	C	C	C	C	C	C	C
	50	B	B	C	C	C	C	C	C	BB	BB	BB	BB	BB	BB	BB	BB	BB	BB	BB	BB
	60	BB	BB	BB	BB	BB	BB	BB	BB	BB	CC	BB	BB	CC	CC	CC	CC	CC	CC	CC	D
	70	CC	CC	CC	CC	CC	CC	CC	D	D	D	D	D	D	D	E	D	D	D	E	E
	80	D	D	D	D	D	D	D	D	D	E	D	D	E	E	E	E	E	E	E	E
	90	D	D	D	D	E	D	D	E	E	E	E	E	E	E	E	DD	DD	DD	DD	DD
	100	DD	DD	DD	DD	EE	DD	DD	DD	EE	EE	EE	EE	EE	EE	EE	EE	EE	EE	EE	EE

REVIEWED FOR CODE COMPLIANCE BY William Staehlin OPM-0043 DATE 01/23/2023 CALIFORNIA BUILDING CODE, 2022

NOTES:

1. REFER TO PAGE T3.0 FOR TRAPEZE MEMBER SIZE DESIGNATIONS & ALLOWABLE MOMENT CAPACITIES .
2. STEEL ANGLE MAY BE USED IN PLACE OF CHANNEL STRUT. FOR 1⅝"x1⅝"x12 GA SINGLE STRUT, USE L2½x2½x¼. FOR 1⅝"x3¼"x12 GA SINGLE STRUT, USE L3x3x¼. FOR 1⅝"x1⅝"x12 GA SINGLE STRUT CONTRACTOR MAY USE 1⅝x$^{13}/_{16}$x12GA DOUBLE STRUT AS A SUBSTITUTION.
3. TRAPEZE MEMBERS MAY BE PROVIDED WITH ROUND HOLES. REFER TO X7.0 AND X7.1 FOR STRUT MEMBER DATA.
4. MAXIMUM SPAN OF TRAPEZE MEMBER IS MEASURED BETWEEN CENTER OF HANGER RODS.
5. CONTRACTOR MAY USE ANY TRAPEZE MEMBER SIZE LARGER THAN IS TABULATED. FOR EXAMPLE, IF TRAPEZE MEMBER SIZE "A" IS THE MINIMUM REQUIREMENT, THEN TRAPEZE MEMBER B, BB, C, CC, D, DD, E, OR EE CAN ALSO BE USED.
6. WHEN INCREASING DISTANCE FROM EDGE OF CABLE TRAY TO CENTER OF HANGER ROD MORE THAN 6", INCREASE THE WEIGHT PER FOOT BY A FACTOR OF INCREASED EDGE DISTANCE DIVIDED BY 6". FOR EXAMPLE, A 12" CABLE TRAY WEIGHING 9 LB/FT WITH AN EDGE DISTANCE OF 12" MUST INCREASE THE WEIGHT BY A FACTOR OF 2 (12"/6") TO USE THE ABOVE TABLE.

MASON WEST
1601 E. Miraloma Ave. Placentia, CA 92870
TEL (714) 630 - 0701, www.masonwest.com

Jiefu "Jeff" Zhang, SE
California SE No. S5270

PAGE
T3.3

CABLE TRAY	TRAPEZE SELECTION TABLES	LATERAL FORCE Fp = 0.625g (ASD) VERTICAL FORCE Fpv = 0.375g (ASD)

Fp = 0.625g Fpv = 0.375g		TRAPEZE SIZE DESIGNATION @ ALL-DIRECTIONAL AND LONGITUDINAL SEISMIC BRACE LOCATIONS																			
CABLE TRAY SUPPORT AT 10'-0" MAX.		LONG. & ALL-DIR. SEISMIC LOCATION SPACING 10 FT					LONG. & ALL-DIR. SEISMIC LOCATION SPACING 20 FT					LONG. & ALL-DIR. SEISMIC LOCATION SPACING 30 FT					LONG. & ALL-DIR. SEISMIC LOCATION SPACING 40 FT				
		MAX TRAPEZE SPAN					MAX TRAPEZE SPAN					MAX TRAPEZE SPAN					MAX TRAPEZE SPAN				
		18 IN	24 IN	36 IN	48 IN	60 IN	18 IN	24 IN	36 IN	48 IN	60 IN	18 IN	24 IN	36 IN	48 IN	60 IN	18 IN	24 IN	36 IN	48 IN	60 IN
CABLE TRAY WEIGHT (LBS/FT)	10	A	A	A	A	A	A	A	A	A	A	A	A	A	A	A	A	A	A	A	A
	20	A	A	A	A	A	A	A	A	A	A	A	A	A	A	A	A	A	A	A	A
	30	A	A	A	A	A	AA	AA	AA	AA	AA	AA	AA	AA	B	B	B	B	B	B	B
	40	B	B	B	B	B	B	B	B	B	B	B	B	B	B	B	B	B	B	B	B
	50	B	B	B	B	B	B	B	B	B	B	B	B	B	B	B	B	B	C	C	BB
	60	B	B	B	B	B	B	B	B	B	B	B	B	C	C	C	BB	BB	BB	BB	BB
	70	B	B	B	B	B	B	B	C	C	C	BB	BB	BB	BB	CC	BB	BB	CC	CC	CC
	80	B	B	B	B	C	BB	BB	BB	BB	CC	BB	BB	CC	D	D	D	D	D	D	D
	90	B	B	BB	BB	CC	BB	BB	D	D	D	D	D	D	D	D	D	D	D	D	E
	100	D	D	D	D	D	D	D	D	D	E	D	E	E	E	E	DD	DD	DD	DD	EE

Fp = 0.625g Fpv = 0.375g		TRAPEZE SIZE DESIGNATION @ ALL-DIRECTIONAL AND LONGITUDINAL SEISMIC BRACE LOCATIONS																			
CABLE TRAY SUPPORT AT 10'-0" MAX.		LONG. & ALL-DIR. SEISMIC LOCATION SPACING 50 FT					LONG. & ALL-DIR. SEISMIC LOCATION SPACING 60 FT					LONG. & ALL-DIR. SEISMIC LOCATION SPACING 70 FT					LONG. & ALL-DIR. SEISMIC LOCATION SPACING 80 FT				
		MAX TRAPEZE SPAN					MAX TRAPEZE SPAN					MAX TRAPEZE SPAN					MAX TRAPEZE SPAN				
		18 IN	24 IN	36 IN	48 IN	60 IN	18 IN	24 IN	36 IN	48 IN	60 IN	18 IN	24 IN	36 IN	48 IN	60 IN	18 IN	24 IN	36 IN	48 IN	60 IN
CABLE TRAY WEIGHT (LBS/FT)	10	A	A	A	A	A	A	A	A	A	A	A	A	A	A	A	A	A	A	A	A
	20	A	A	A	AA	AA	AA	AA	AA	AA	AA	AA	AA	AA	AA	AA	AA	AA	AA	AA	AA
	30	B	B	B	B	B	B	B	B	B	B	B	B	B	B	B	B	B	B	B	C
	40	B	B	B	B	C	C	C	C	C	C	C	C	C	BB	BB	BB	BB	BB	BB	BB
	50	BB	BB	BB	BB	BB	BB	BB	BB	BB	BB	BB	BB	BB	BB	CC	BB	BB	CC	CC	CC
	60	BB	BB	BB	CC	CC	BB	BB	CC	CC	CC	CC	CC	D	D	E	E	E	E	E	E
	70	D	D	D	D	D	D	D	D	D	E	E	E	E	E	E	E	E	E	DD	DD
	80	D	D	D	D	E	E	E	E	E	E	DD	DD	DD	DD	DD	DD	DD	DD	DD	DD
	90	D	D	E	E	E	DD	DD	DD	DD	DD	DD	DD	DD	DD	DD	DD	DD	DD	DD	EE
	100	DD	DD	DD	EE	EE	DD	EE	EE	EE	EE	N/A	N/A	N/A	N/A	N/A	N/A	N/A	N/A	N/A	N/A

REVIEWED FOR CODE COMPLIANCE
BY: William Staehlin
DATE 01/23/2023
CALIFORNIA BUILDING CODE, 2022

NOTES:

1. REFER TO PAGE T3.0 FOR TRAPEZE MEMBER SIZE DESIGNATIONS & ALLOWABLE MOMENT CAPACITIES .
2. STEEL ANGLE MAY BE USED IN PLACE OF CHANNEL STRUT. FOR 1⅝"x1⅝"x12 GA SINGLE STRUT, USE L2½x2½x¼. FOR 1⅝"x3¼"x12 GA SINGLE STRUT, USE L3x3x¼. FOR 1⅝"x1⅝"x12 GA SINGLE STRUT CONTRACTOR MAY USE 1⅝x1 13/16x12GA DOUBLE STRUT AS A SUBSTITUTION.
3. TRAPEZE MEMBERS MAY BE PROVIDED WITH ROUND HOLES. REFER TO X7.0 AND X7.1 FOR STRUT MEMBER DATA.
4. MAXIMUM SPAN OF TRAPEZE MEMBER IS MEASURED BETWEEN CENTER OF HANGER RODS.
5. CONTRACTOR MAY USE ANY TRAPEZE MEMBER SIZE LARGER THAN IS TABULATED. FOR EXAMPLE, IF TRAPEZE MEMBER SIZE "A" IS THE MINIMUM REQUIREMENT, THEN TRAPEZE MEMBER B, BB, C, CC, D, DD, E, OR EE CAN ALSO BE USED.
6. WHEN INCREASING DISTANCE FROM EDGE OF CABLE TRAY TO CENTER OF HANGER ROD MORE THAN 6", INCREASE THE WEIGHT PER FOOT BY A FACTOR OF INCREASED EDGE DISTANCE DIVIDED BY 6". FOR EXAMPLE, A 12" CABLE TRAY WEIGHING 9 LB/FT WITH AN EDGE DISTANCE OF 12" MUST INCREASE THE WEIGHT BY A FACTOR OF 2 (12"/6") TO USE THE ABOVE TABLE.

MASON WEST
1601 E. Miraloma Ave. Placentia, CA 92870
TEL (714) 630 - 0701, www.masonwest.com

Jiefu "Jeff" Zhang, SE
California SE No. S5270

PAGE
T3.4

CABLE TRAY	TRAPEZE SELECTION TABLES	LATERAL FORCE Fp = 0.75g (ASD) VERTICAL FORCE Fpv = 0.375g (ASD)

Fp = 0.75g Fpv = 0.375g		TRAPEZE SIZE DESIGNATION @ ALL-DIRECTIONAL AND LONGITUDINAL SEISMIC BRACE LOCATIONS																			
CABLE TRAY SUPPORT AT 10'-0" MAX.		LONG. & ALL-DIR. SEISMIC LOCATION SPACING 10 FT					LONG. & ALL-DIR. SEISMIC LOCATION SPACING 20 FT					LONG. & ALL-DIR. SEISMIC LOCATION SPACING 30 FT					LONG. & ALL-DIR. SEISMIC LOCATION SPACING 40 FT				
		MAX TRAPEZE SPAN					MAX TRAPEZE SPAN					MAX TRAPEZE SPAN					MAX TRAPEZE SPAN				
		18 IN	24 IN	36 IN	48 IN	60 IN	18 IN	24 IN	36 IN	48 IN	60 IN	18 IN	24 IN	36 IN	48 IN	60 IN	18 IN	24 IN	36 IN	48 IN	60 IN
CABLE TRAY WEIGHT (LBS/FT)	10	A	A	A	A	A	A	A	A	A	A	A	A	A	A	A	A	A	A	A	A
	20	A	A	A	A	A	A	A	A	A	A	A	A	A	A	A	A	A	A	AA	AA
	30	A	A	A	A	A	AA	AA	AA	AA	AA	B	B	B	B	B	B	B	B	B	B
	40	B	B	B	B	B	B	B	B	B	B	B	B	B	B	B	B	B	B	B	B
	50	B	B	B	B	B	B	B	B	B	B	B	B	B	B	C	C	C	C	BB	BB
	60	B	B	B	B	B	B	B	B	B	C	BB	BB	BB	BB	BB	BB	BB	BB	BB	CC
	70	B	B	B	B	B	C	C	BB	BB	BB	BB	BB	BB	CC	CC	CC	CC	D	D	D
	80	B	B	B	C	C	BB	BB	BB	CC	CC	D	D	D	D	D	D	D	D	D	E
	90	BB	BB	BB	CC	CC	D	D	D	D	D	D	D	D	D	E	D	D	E	E	E
	100	D	D	D	D	D	D	D	D	E	E	DD	DD	DD	DD	EE	EE	EE	EE	EE	EE

Fp = 0.75g Fpv = 0.375g		TRAPEZE SIZE DESIGNATION @ ALL-DIRECTIONAL AND LONGITUDINAL SEISMIC BRACE LOCATIONS																			
CABLE TRAY SUPPORT AT 10'-0" MAX.		LONG. & ALL-DIR. SEISMIC LOCATION SPACING 50 FT					LONG. & ALL-DIR. SEISMIC LOCATION SPACING 60 FT					LONG. & ALL-DIR. SEISMIC LOCATION SPACING 70 FT					LONG. & ALL-DIR. SEISMIC LOCATION SPACING 80 FT				
		MAX TRAPEZE SPAN					MAX TRAPEZE SPAN					MAX TRAPEZE SPAN					MAX TRAPEZE SPAN				
		18 IN	24 IN	36 IN	48 IN	60 IN	18 IN	24 IN	36 IN	48 IN	60 IN	18 IN	24 IN	36 IN	48 IN	60 IN	18 IN	24 IN	36 IN	48 IN	60 IN
CABLE TRAY WEIGHT (LBS/FT)	10	A	A	A	A	A	A	A	A	A	A	A	A	A	A	A	A	A	A	A	A
	20	AA	AA	AA	AA	AA	AA	AA	AA	AA	AA	AA	AA	AA	AA	B	AA	AA	AA	B	B
	30	B	B	B	B	B	B	B	B	B	B	B	B	B	C	C	C	C	C	C	C
	40	C	C	C	C	C	C	C	C	BB	BB	BB	BB	BB	BB	BB	BB	BB	BB	BB	BB
	50	BB	BB	BB	BB	BB	BB	BB	BB	BB	CC	BB	BB	CC	CC	CC	CC	CC	CC	E	E
	60	BB	BB	CC	CC	CC	D	D	D	D	E	E	E	E	E	E	E	E	E	E	E
	70	D	D	D	D	E	E	E	E	E	E	DD	DD	DD	DD	DD	DD	DD	DD	DD	DD
	80	E	E	E	E	E	DD	DD	DD	DD	DD	DD	DD	DD	DD	DD	DD	DD	DD	DD	EE
	90	DD	DD	DD	DD	DD	DD	DD	DD	DD	EE	DD	DD	DD	DD	EE	DD	DD	EE	EE	EE
	100	DD	EE	EE	EE	EE	N/A	N/A	N/A	N/A	N/A	N/A	N/A	N/A	N/A	N/A	N/A	N/A	N/A	N/A	N/A

REVIEWED FOR CODE COMPLIANCE
CBC
BY: William Staehlin
DATE: 01/23/2023
CALIFORNIA BUILDING CODE, 2022

NOTES:

1. REFER TO PAGE T3.0 FOR TRAPEZE MEMBER SIZE DESIGNATIONS & ALLOWABLE MOMENT CAPACITIES .
2. STEEL ANGLE MAY BE USED IN PLACE OF CHANNEL STRUT. FOR 1⅝"x1⅝"x12 GA SINGLE STRUT, USE L2½x2½x¼. FOR 1⅝"x3¼"x12 GA SINGLE STRUT, USE L3x3x¼. FOR 1⅝"x1⅝"x12 GA SINGLE STRUT CONTRACTOR MAY USE 1⅝x1 3/16x12GA DOUBLE STRUT AS A SUBSTITUTION.
3. TRAPEZE MEMBERS MAY BE PROVIDED WITH ROUND HOLES. REFER TO X7.0 AND X7.1 FOR STRUT MEMBER DATA.
4. MAXIMUM SPAN OF TRAPEZE MEMBER IS MEASURED BETWEEN CENTER OF HANGER RODS.
5. CONTRACTOR MAY USE ANY TRAPEZE MEMBER SIZE LARGER THAN IS TABULATED. FOR EXAMPLE, IF TRAPEZE MEMBER SIZE "A" IS THE MINIMUM REQUIREMENT, THEN TRAPEZE MEMBER B, BB, C, CC, D, DD, E, OR EE CAN ALSO BE USED.
6. WHEN INCREASING DISTANCE FROM EDGE OF CABLE TRAY TO CENTER OF HANGER ROD MORE THAN 6", INCREASE THE WEIGHT PER FOOT BY A FACTOR OF INCREASED EDGE DISTANCE DIVIDED BY 6". FOR EXAMPLE, A 12" CABLE TRAY WEIGHING 9 LB/FT WITH AN EDGE DISTANCE OF 12" MUST INCREASE THE WEIGHT BY A FACTOR OF 2 (12"/6") TO USE THE ABOVE TABLE.

MASON WEST
1601 E. Miraloma Ave. Placentia, CA 92870
TEL (714) 630 - 0701, www.masonwest.com

Jiefu "Jeff" Zhang, SE
California SE No. S5270

PAGE
T3.5

CABLE TRAY	TRAPEZE SELECTION TABLES	LATERAL FORCE Fp = 0.875g (ASD) VERTICAL FORCE Fpv = 0.375g (ASD)

Fp = 0.875g Fpv = 0.375g		TRAPEZE SIZE DESIGNATION @ ALL-DIRECTIONAL AND LONGITUDINAL SEISMIC BRACE LOCATIONS																			
CABLE TRAY SUPPORT AT 10'-0" MAX.		LONG. & ALL-DIR. SEISMIC LOCATION SPACING 10 FT					LONG. & ALL-DIR. SEISMIC LOCATION SPACING 20 FT					LONG. & ALL-DIR. SEISMIC LOCATION SPACING 30 FT					LONG. & ALL-DIR. SEISMIC LOCATION SPACING 40 FT				
		MAX TRAPEZE SPAN					MAX TRAPEZE SPAN					MAX TRAPEZE SPAN					MAX TRAPEZE SPAN				
		18 IN	24 IN	36 IN	48 IN	60 IN	18 IN	24 IN	36 IN	48 IN	60 IN	18 IN	24 IN	36 IN	48 IN	60 IN	18 IN	24 IN	36 IN	48 IN	60 IN
CABLE TRAY WEIGHT (LBS/FT)	10	A	A	A	A	A	A	A	A	A	A	A	A	A	A	A	A	A	A	A	A
	20	A	A	A	A	A	A	A	A	A	A	A	A	A	A	AA	A	A	AA	AA	AA
	30	A	A	A	A	AA	AA	AA	AA	AA	B	B	B	B	B	B	B	B	B	B	B
	40	B	B	B	B	B	B	B	B	B	B	B	B	B	B	B	B	B	B	C	C
	50	B	B	B	B	B	B	B	B	B	B	B	B	C	C	C	BB	BB	BB	BB	BB
	60	B	B	B	B	B	B	B	B	C	C	BB	BB	BB	BB	BB	BB	BB	BB	CC	CC
	70	B	B	B	B	C	BB	BB	BB	BB	CC	BB	BB	CC	CC	CC	D	D	D	D	E
	80	B	B	C	C	C	BB	BB	CC	CC	CC	D	D	D	D	D	D	D	E	E	E
	90	BB	BB	BB	CC	CC	D	D	D	D	D	D	D	D	D	E	E	E	E	E	E
	100	D	D	D	D	D	D	D	E	E	E	DD	DD	DD	DD	EE	EE	EE	EE	EE	EE

Fp = 0.875g Fpv = 0.375g		TRAPEZE SIZE DESIGNATION @ ALL-DIRECTIONAL AND LONGITUDINAL SEISMIC BRACE LOCATIONS																			
CABLE TRAY SUPPORT AT 10'-0" MAX.		LONG. & ALL-DIR. SEISMIC LOCATION SPACING 50 FT					LONG. & ALL-DIR. SEISMIC LOCATION SPACING 60 FT					LONG. & ALL-DIR. SEISMIC LOCATION SPACING 70 FT					LONG. & ALL-DIR. SEISMIC LOCATION SPACING 80 FT				
		MAX TRAPEZE SPAN					MAX TRAPEZE SPAN					MAX TRAPEZE SPAN					MAX TRAPEZE SPAN				
		18 IN	24 IN	36 IN	48 IN	60 IN	18 IN	24 IN	36 IN	48 IN	60 IN	18 IN	24 IN	36 IN	48 IN	60 IN	18 IN	24 IN	36 IN	48 IN	60 IN
CABLE TRAY WEIGHT (LBS/FT)	10	A	A	A	A	A	A	A	A	A	A	A	A	A	A	A	A	A	A	A	A
	20	AA	AA	AA	AA	AA	AA	AA	AA	AA	B	AA	AA	AA	B	B	AA	AA	B	B	B
	30	B	B	B	B	B	B	B	B	C	C	C	C	C	C	C	C	C	BB	BB	BB
	40	C	C	C	BB	BB	BB	BB	BB	BB	BB	BB	BB	BB	BB	BB	BB	BB	BB	CC	CC
	50	BB	BB	BB	BB	CC	BB	BB	CC	CC	CC	CC	CC	CC	E	E	E	E	E	E	E
	60	CC	CC	D	D	E	E	E	E	E	E	DD	DD	DD	DD	DD	DD	DD	DD	DD	DD
	70	E	E	E	E	E	DD	DD	DD	DD	DD	DD	DD	DD	DD	DD	DD	DD	DD	DD	EE
	80	DD	DD	DD	DD	DD	DD	DD	DD	DD	DD	DD	DD	DD	DD	EE	DD	DD	EE	EE	EE
	90	DD	DD	DD	DD	DD	DD	DD	DD	DD	EE	DD	DD	EE	EE	EE	EE	EE	EE	EE	EE
	100	N/A	N/A	N/A	N/A	N/A	N/A	N/A	N/A	N/A	N/A	N/A	N/A	N/A	N/A	N/A	N/A	N/A	N/A	N/A	N/A

REVIEWED FOR CODE COMPLIANCE
OPM-0043
BY William Staehlin
DATE 01/23/2023
CALIFORNIA BUILDING CODE, 2022

NOTES:

1. REFER TO PAGE T3.0 FOR TRAPEZE MEMBER SIZE DESIGNATIONS & ALLOWABLE MOMENT CAPACITIES .
2. STEEL ANGLE MAY BE USED IN PLACE OF CHANNEL STRUT. FOR 1⅝"x1⅝"x12 GA SINGLE STRUT, USE L2½x2½x¼. FOR 1⅝"x3¼"x12 GA SINGLE STRUT, USE L3x3x¼. FOR 1⅝"x1⅝"x12 GA SINGLE STRUT CONTRACTOR MAY USE 1⅝x1$^{3}/_{16}$x12GA DOUBLE STRUT AS A SUBSTITUTION.
3. TRAPEZE MEMBERS MAY BE PROVIDED WITH ROUND HOLES. REFER TO X7.0 AND X7.1 FOR STRUT MEMBER DATA.
4. MAXIMUM SPAN OF TRAPEZE MEMBER IS MEASURED BETWEEN CENTER OF HANGER RODS.
5. CONTRACTOR MAY USE ANY TRAPEZE MEMBER SIZE LARGER THAN IS TABULATED. FOR EXAMPLE, IF TRAPEZE MEMBER SIZE "A" IS THE MINIMUM REQUIREMENT, THEN TRAPEZE MEMBER B, BB, C, CC, D, DD, E, OR EE CAN ALSO BE USED.
6. WHEN INCREASING DISTANCE FROM EDGE OF CABLE TRAY TO CENTER OF HANGER ROD MORE THAN 6", INCREASE THE WEIGHT PER FOOT BY A FACTOR OF INCREASED EDGE DISTANCE DIVIDED BY 6". FOR EXAMPLE, A 12" CABLE TRAY WEIGHING 9 LB/FT WITH AN EDGE DISTANCE OF 12" MUST INCREASE THE WEIGHT BY A FACTOR OF 2 (12"/6") TO USE THE ABOVE TABLE.

MASON WEST
1601 E. Miraloma Ave. Placentia, CA 92870
TEL (714) 630 - 0701, www.masonwest.com

Jiefu "Jeff" Zhang, SE
California SE No. S5270

PAGE
T3.6

CABLE TRAY	TRAPEZE SELECTION TABLES	LATERAL FORCE Fp = 1.00g (ASD) VERTICAL FORCE Fpv = 0.375g (ASD)

Fp = 1g Fpv = 0.375g		TRAPEZE SIZE DESIGNATION @ ALL-DIRECTIONAL AND LONGITUDINAL SEISMIC BRACE LOCATIONS																			
CABLE TRAY SUPPORT AT 10'-0" MAX.		LONG. & ALL-DIR. SEISMIC LOCATION SPACING 10 FT					LONG. & ALL-DIR. SEISMIC LOCATION SPACING 20 FT					LONG. & ALL-DIR. SEISMIC LOCATION SPACING 30 FT					LONG. & ALL-DIR. SEISMIC LOCATION SPACING 40 FT				
		MAX TRAPEZE SPAN					MAX TRAPEZE SPAN					MAX TRAPEZE SPAN					MAX TRAPEZE SPAN				
		18 IN	24 IN	36 IN	48 IN	60 IN	18 IN	24 IN	36 IN	48 IN	60 IN	18 IN	24 IN	36 IN	48 IN	60 IN	18 IN	24 IN	36 IN	48 IN	60 IN
CABLE TRAY WEIGHT (LBS/FT)	10	A	A	A	A	A	A	A	A	A	A	A	A	A	A	A	A	A	A	A	A
	20	A	A	A	A	A	A	A	A	A	A	A	A	A	AA	AA	AA	AA	AA	AA	AA
	30	A	A	A	AA	AA	AA	AA	AA	B	B	B	B	B	B	B	B	B	B	B	B
	40	B	B	B	B	B	B	B	B	B	B	B	B	B	B	B	C	C	C	C	C
	50	B	B	B	B	B	B	B	B	B	B	C	C	C	BB	BB	BB	BB	BB	BB	BB
	60	B	B	B	B	B	C	C	C	C	BB	BB	BB	BB	BB	CC	CC	CC	CC	CC	D
	70	B	B	B	B	C	BB	BB	BB	BB	CC	CC	CC	D	D	D	D	D	D	E	E
	80	C	C	BB	BB	BB	CC	CC	D	D	D	D	D	D	D	E	E	E	E	E	E
	90	BB	BB	BB	CC	CC	D	D	D	D	D	D	D	E	E	E	DD	DD	DD	DD	DD
	100	D	D	D	D	E	E	E	E	E	E	DD	DD	DD	EE	EE	EE	EE	EE	EE	EE

Fp = 1g Fpv = 0.375g		TRAPEZE SIZE DESIGNATION @ ALL-DIRECTIONAL AND LONGITUDINAL SEISMIC BRACE LOCATIONS																			
CABLE TRAY SUPPORT AT 10'-0" MAX.		LONG. & ALL-DIR. SEISMIC LOCATION SPACING 50 FT					LONG. & ALL-DIR. SEISMIC LOCATION SPACING 60 FT					LONG. & ALL-DIR. SEISMIC LOCATION SPACING 70 FT					LONG. & ALL-DIR. SEISMIC LOCATION SPACING 80 FT				
		MAX TRAPEZE SPAN					MAX TRAPEZE SPAN					MAX TRAPEZE SPAN					MAX TRAPEZE SPAN				
		18 IN	24 IN	36 IN	48 IN	60 IN	18 IN	24 IN	36 IN	48 IN	60 IN	18 IN	24 IN	36 IN	48 IN	60 IN	18 IN	24 IN	36 IN	48 IN	60 IN
CABLE TRAY WEIGHT (LBS/FT)	10	A	A	A	A	A	A	A	A	A	A	A	A	A	A	A	A	A	A	A	AA
	20	AA	AA	AA	AA	AA	AA	AA	AA	B	B	AA	AA	B	B	B	B	B	B	B	B
	30	B	B	B	B	C	C	C	C	C	C	C	C	BB	BB	BB	BB	BB	BB	BB	BB
	40	BB	BB	BB	BB	BB	BB	BB	BB	BB	BB	BB	BB	BB	CC	CC	CC	CC	CC	CC	CC
	50	BB	BB	CC	CC	CC	CC	CC	CC	E	E	E	E	E	E	E	DD	DD	DD	DD	DD
	60	D	D	D	E	E	E	E	E	E	E	DD	DD	DD	DD	DD	DD	DD	DD	DD	DD
	70	E	E	E	E	DD	DD	DD	DD	DD	DD	DD	DD	DD	DD	EE	DD	DD	DD	EE	EE
	80	DD	DD	DD	DD	DD	DD	DD	DD	DD	EE	DD	DD	EE	EE	EE	EE	EE	EE	EE	EE
	90	DD	DD	DD	DD	EE	DD	DD	EE	EE	EE	EE	EE	EE	EE	EE	N/A	N/A	N/A	N/A	N/A
	100	N/A	N/A	N/A	N/A	N/A	N/A	N/A	N/A	N/A	N/A	N/A	N/A	N/A	N/A	N/A	N/A	N/A	N/A	N/A	N/A

REVIEWED FOR CODE COMPLIANCE
PCA
BY William Staehlin
DATE: 01/23/2023
CALIFORNIA BUILDING CODE, 2022

NOTES:

1. REFER TO PAGE T3.0 FOR TRAPEZE MEMBER SIZE DESIGNATIONS & ALLOWABLE MOMENT CAPACITIES .
2. STEEL ANGLE MAY BE USED IN PLACE OF CHANNEL STRUT. FOR 1⅝"x1⅝"x12 GA SINGLE STRUT, USE L2½x2½x¼. FOR 1⅝"x3¼"x12 GA SINGLE STRUT, USE L3x3x¼. FOR 1⅝"x1⅝"x12 GA SINGLE STRUT CONTRACTOR MAY USE 1⅝x$^{13}/_{16}$x12GA DOUBLE STRUT AS A SUBSTITUTION.
3. TRAPEZE MEMBERS MAY BE PROVIDED WITH ROUND HOLES. REFER TO X7.0 AND X7.1 FOR STRUT MEMBER DATA.
4. MAXIMUM SPAN OF TRAPEZE MEMBER IS MEASURED BETWEEN CENTER OF HANGER RODS.
5. CONTRACTOR MAY USE ANY TRAPEZE MEMBER SIZE LARGER THAN IS TABULATED. FOR EXAMPLE, IF TRAPEZE MEMBER SIZE "A" IS THE MINIMUM REQUIREMENT, THEN TRAPEZE MEMBER B, BB, C, CC, D, DD, E, OR EE CAN ALSO BE USED.
6. WHEN INCREASING DISTANCE FROM EDGE OF CABLE TRAY TO CENTER OF HANGER ROD MORE THAN 6", INCREASE THE WEIGHT PER FOOT BY A FACTOR OF INCREASED EDGE DISTANCE DIVIDED BY 6". FOR EXAMPLE, A 12" CABLE TRAY WEIGHING 9 LB/FT WITH AN EDGE DISTANCE OF 12" MUST INCREASE THE WEIGHT BY A FACTOR OF 2 (12"/6") TO USE THE ABOVE TABLE.

MASON WEST
1601 E. Miraloma Ave. Placentia, CA 92870
TEL (714) 630 - 0701, www.masonwest.com

Jiefu "Jeff" Zhang, SE
California SE No. S5270

PAGE
T3.7

MASON IND. N.Y. SCB - SEISMIC CABLE BRACE

FM
TESTED

FINISH:
ALL PARTS ARE
ZINC ELECTROPLATED

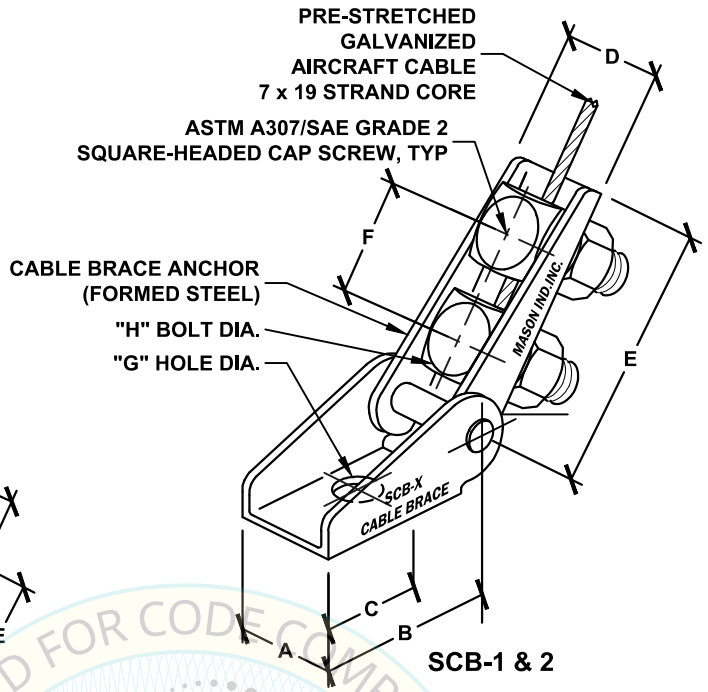

SCB-1 & 2

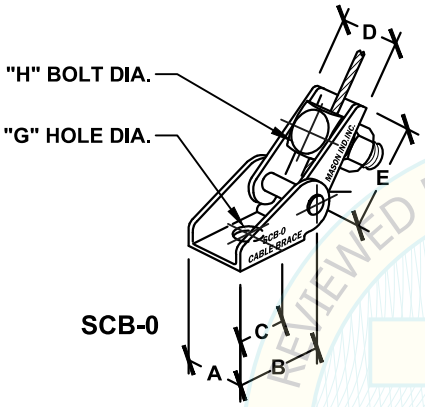

REVIEWED FOR CODE COMPLIANCE
HCAi
OPM-0043
BY: William Staehlin
DATE: 01/23/2023
CALIFORNIA BUILDING CODE 2022

NOTE: NOT TO BE USED AS A HANGER FOR EQUIPMENT, DUCTWORK OR PIPING.
TO BE USED AS A SEISMIC RESTRAINT ONLY.

TYPE SCB DIMENSIONS (inches mm)

SIZE	A		B		C		D		E		F		G		H	
SCB-0	1 5/16	33	1 1/2	38	3/4	19	15/16	24	1 3/4	44	-	-	7/16	11	5/8	16
SCB-1	1 3/8	35	2	51	1	25	1	25	3 3/8	86	1 1/2	38	9/16	14	5/8	16
SCB-2	1 5/8	41	2 3/4	70	1 3/8	35	1 1/4	32	4 3/8	111	1 3/4	44	11/16	17	3/4	19

TYPE SCB ASSEMBLY RATINGS (ASD)

SIZE	CABLE DIA.[1]		LATERAL LOAD RATINGS [4]						TORQUE ON BOLTS[3]		
			30° - 45° [2]			46° - 60° [2]					
	(in)	(mm)	lbs	kN	kg	lbs	kN	kg	Ft-lbs	N-m	Kg-m
SCB-0	3/32	2.4	283	1.3	128	200	0.9	91	30	41	4.2
SCB-1	1/8	3	565	2.5	256	400	1.8	181	25	34	3.5
SCB-2	3/16	5	1188	5.3	539	840	3.7	381	45	61	6.2

1. CABLES SHALL MEET THE FOLLOWING SPECIFICATIONS: MIL-DTL-83420M WITH AMENDMENT 2 AND RR-W-410F.
2. BRACE ANGLE MEASURED FROM HORIZONTAL.
3. REFER TO PAGE X4.0 FOR BREAK-OFF NUT (MW-SCB-BON) OPTION TO STANDARD HEX NUT.
4. ATTACHMENT TO STEEL OR OTHER SUBSTRATES (e.g., CONCRETE, WOOD) MAY GOVERN THE DESIGN OF THE OVERALL BRACE ASSEMBLY AND SHALL BE EVALUATED ON A PROJECT BY PROJECT BASIS PER ATTACHMENT LOAD RATINGS IN SECTION N.

MASON WEST
1601 E. Miraloma Ave. Placentia, CA 92870
TEL (714) 630 - 0701, www.masonwest.com

Jiefu "Jeff" Zhang, SE
California SE No. S5270

MASON IND. N.Y. SCBH - SEISMIC CABLE BRACE WITH HOOK ATTACHMENT

FM

TESTED

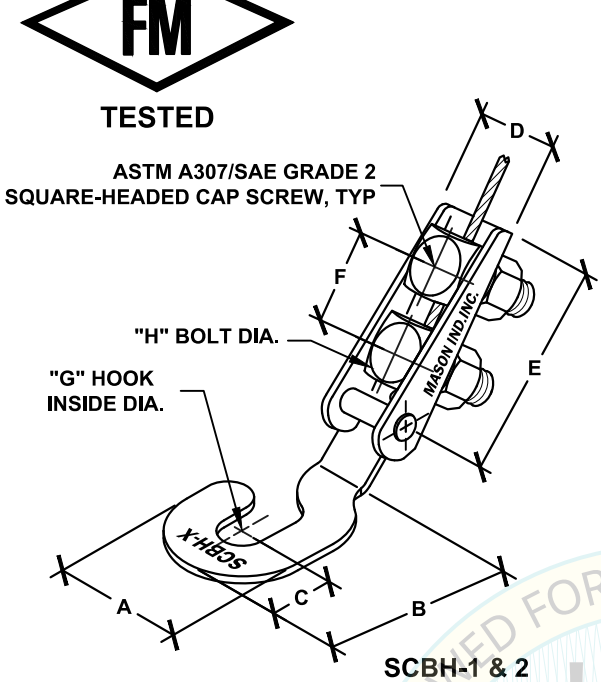

SCBH-1 & 2

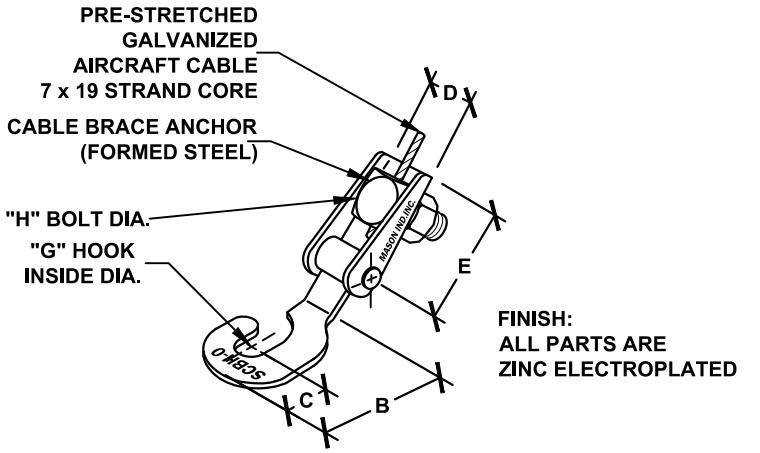

SCBH-0

FINISH:
ALL PARTS ARE
ZINC ELECTROPLATED

NOTE: NOT TO BE USED AS A HANGER FOR EQUIPMENT, DUCTWORK OR PIPING. TO BE USED AS A SEISMIC RESTRAINT ONLY.

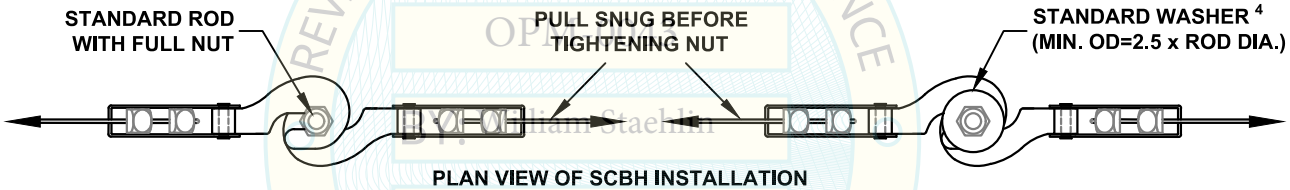

PLAN VIEW OF SCBH INSTALLATION

REVIEWED FOR CODE COMPLIANCE
HCAi
OPM
BY: William Staehlin
DATE: 01/23/2023
CALIFORNIA BUILDING CODE 2022

TYPE SCBH DIMENSIONS (inches mm)

SIZE	FOR USE WITH ROD SIZES	A		B		C		D		E		F		G		H	
SCBH-0	3/8	10	1 3/8	35	2 1/16	52	11/16	17	15/16	24	1 3/4	44	-	-	3/8	10	5/8	16
SCBH-1	1/2 [4], 5/8	13, 16	1 7/8	48	2 3/8	60	1	25	1	25	3 3/8	86	1 1/2	38	5/8	16	5/8	16
SCBH-2	3/4 [4], 7/8	19, 22	2 7/8	73	3 3/4	95	1 1/4	35	1 1/4	32	4 3/8	111	1 3/4	44	7/8	22	3/4	19

TYPE SCBH ASSEMBLY RATINGS (ASD)

SIZE	CABLE DIA.[1]		LATERAL LOAD RATINGS [5]						TORQUE ON BOLTS[3]		
			30° - 45° [2]			46° - 60° [2]					
	(in)	(mm)	lbs	kN	kg	lbs	kN	kg	Ft-lbs	N-m	Kg-m
SCBH-0	3/32	2.4	283	1.3	128	200	0.9	91	30	41	4.2
SCBH-1	1/8	3	565	2.5	256	400	1.8	181	25	34	3.5
SCBH-2	3/16	5	1030	4.6	467	480	2.2	218	45	61	6.2

1. CABLES SHALL MEET THE FOLLOWING SPECIFICATIONS: MIL-DTL-83420M WITH AMENDMENT 2 AND RR-W-410F.
2. BRACE ANGLE MEASURED FROM HORIZONTAL.
3. REFER TO PAGE X4.0 FOR BREAK-OFF NUT (MW-SCB-BON) OPTION TO STANDARD HEX NUT.
4. STANDARD WASHER REQUIRED FOR ROD SIZES SMALLER THAN THE HOOK INSIDE DIAMETER 'G'.
5. ATTACHMENT TO STEEL OR OTHER SUBSTRATES (e.g., CONCRETE, WOOD) MAY GOVERN THE DESIGN OF THE OVERALL BRACE ASSEMBLY AND SHALL BE EVALUATED ON A PROJECT BY PROJECT BASIS PER ATTACHMENT LOAD RATINGS IN SECTION N.

MASON WEST
1601 E. Miraloma Ave. Placentia, CA 92870
TEL (714) 630 - 0701, www.masonwest.com

Jiefu "Jeff" Zhang, SE
California SE No. S5270

MASON IND. N.Y. SSBS - SEISMIC SOLID BRACE

FM

APPROVED

½" (13mm) DIA. BOLTS (ASTM A307) MIN. (1) REQUIRED PER SSBS AS ILLUSTRATED. TORQUE BOLTS TO 50 FT-LBS (68 Nm) (REFER TO PAGE X2.3 FOR ATTACHMENT DETAILS) FOR STEEL ANGLE, 2 BOLTS WITH STANDARD NUTS ARE REQUIRED. HOLES IN ANGLE TO BE 9/16" DIAMETER.

STANDARD WASHER, TYP

STRUT SHOWN MAY BE STEEL ANGLE DRILLED TO SUIT. (ASTM A36, Fy = 36 KSI)

STRUT ATTACHMENT NUT WITH STAMPED TEETH AT OPEN FACE OF STRUT

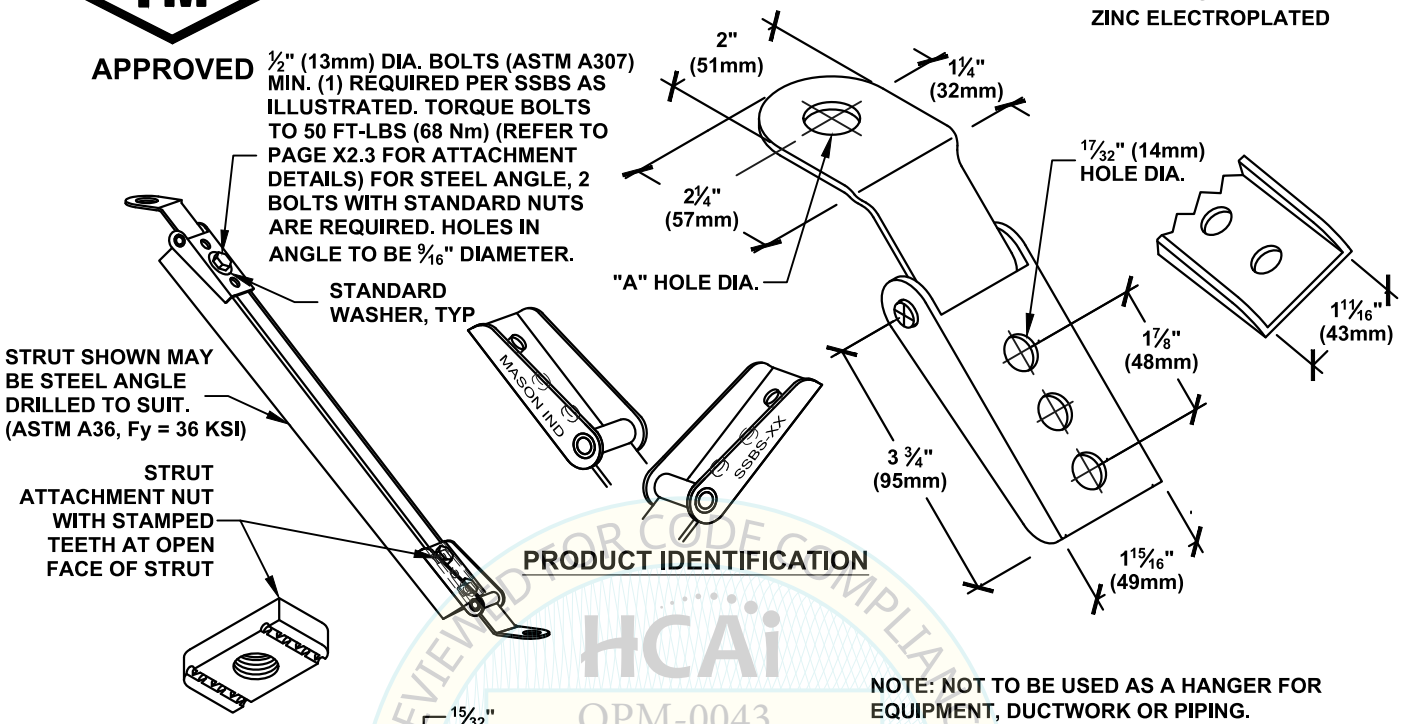

PRODUCT IDENTIFICATION

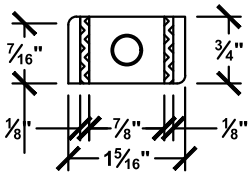

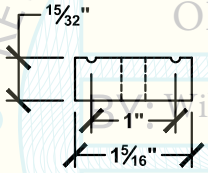

NOTE: NOT TO BE USED AS A HANGER FOR EQUIPMENT, DUCTWORK OR PIPING.
TO BE USED AS A SEISMIC RESTRAINT ONLY.

STRUT NUT DIMENSIONS[2]

STRUT ATTACHMENT NUT (ASTM A36) MUST HAVE STAMPED TEETH TO ACHIEVE THESE VALUES.

BRACE MEMBER AXIAL RATING (ASD) (LBS)

AXIAL MEMBER	MAX LENGTH (FT)		
	5'-0"	9'-6"	14'-6"
1⅝x1⅝x12GA SINGLE STRUT	1600	850	475
1⅝x1⅝x12GA DOUBLE STRUT	3950	2200	1200
L2x2x¼	5790	1970	920
L3x3x¼	14400	6200	3000

NOTE: STRUT MUST BE ASTM A1011SS GR 33 COLD ROLLED MILD STEEL, SLOTTED, PUNCHED OR SOLID (REF X7.0 & X7.1). DOUBLE STRUT MUST BE MINIMUM 2'-0" LONG. ANGLE MUST BE A36 STEEL.

TYPE SSBS DIMENSIONS & RATINGS (ASD)

SIZE	A		ROD/BOLT SIZE		LATERAL LOAD RATINGS [3]					
					30° - 45° [1]			46° - 60° [1]		
	(in)	(mm)	(in)	(mm)	lbs	kN	kg	lbs	kN	kg
SSBS-12	17/32	13	⅜	10	660	2.90	299	970	4.30	440
SSBS-12	17/32	13	½	13	660	2.90	299	970	4.30	440
SSBS-20	25/32	20	⅝	16	660	2.90	299	970	4.30	440
SSBS-20	25/32	20	¾	19	660	2.90	299	970	4.30	440
SSBS-25	1 1/32	26	⅞	22	660	2.90	299	970	4.30	440
SSBS-25	1 1/32	26	1	25	660	2.90	299	970	4.30	440

1. BRACE ANGLE MEASURED FROM HORIZONTAL.
2. REFER TO PAGE X4.0 FOR STRUT NUT WITH STUD (MW-SSN) WITH BREAK-OFF NUT (MW-BON) OPTION TO STRUT NUT AND HEX BOLT.
3. ATTACHMENT TO STEEL OR OTHER SUBSTRATES (e.g., CONCRETE, WOOD) MAY GOVERN THE DESIGN OF THE OVERALL BRACE ASSEMBLY AND SHALL BE EVALUATED ON A PROJECT BY PROJECT BASIS PER ATTACHMENT LOAD RATINGS IN SECTION N.

MASON WEST
1601 E. Miraloma Ave. Placentia, CA 92870
TEL (714) 630 - 0701, www.masonwest.com

Jiefu "Jeff" Zhang, SE
California SE No. S5270

PAGE
X2.0

HCAi
OPM-0043
Reviewed by William Staehlin
DATE: 01/23/2023
REVIEWED FOR CODE COMPLIANCE
CALIFORNIA BUILDING CODE

MASON IND. N.Y. SHB - SEISMIC HOOK BRACE

FM

TESTED

FINISH:
ALL PARTS ARE
ZINC ELECTROPLATED

REFER TO D11.10 - D11.13
FOR CONNECTION TO
SUSPENDED EQUIPMENT

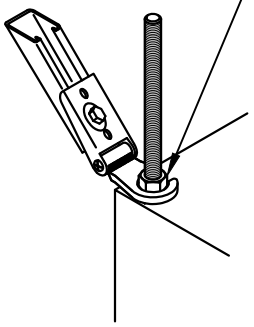

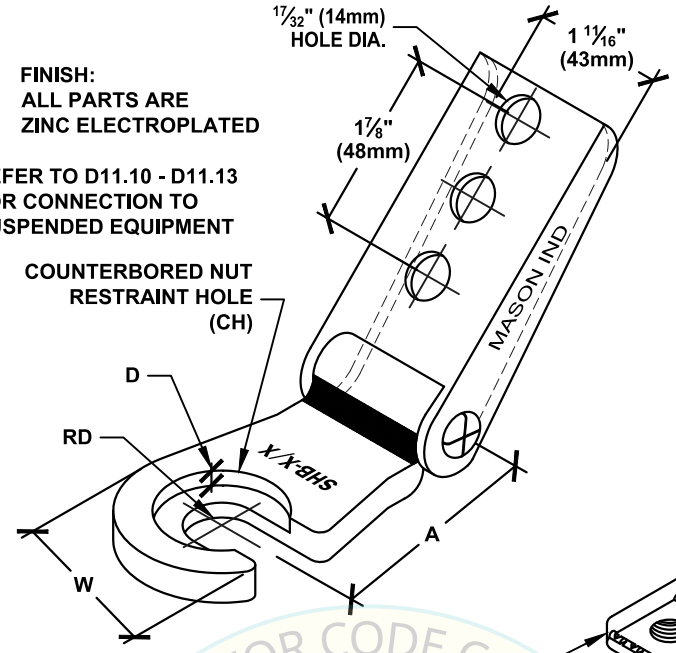

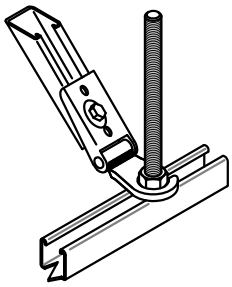

LONGITUDINAL BRACING

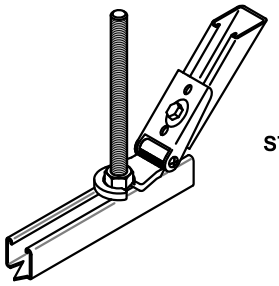

TRANSVERSE BRACING

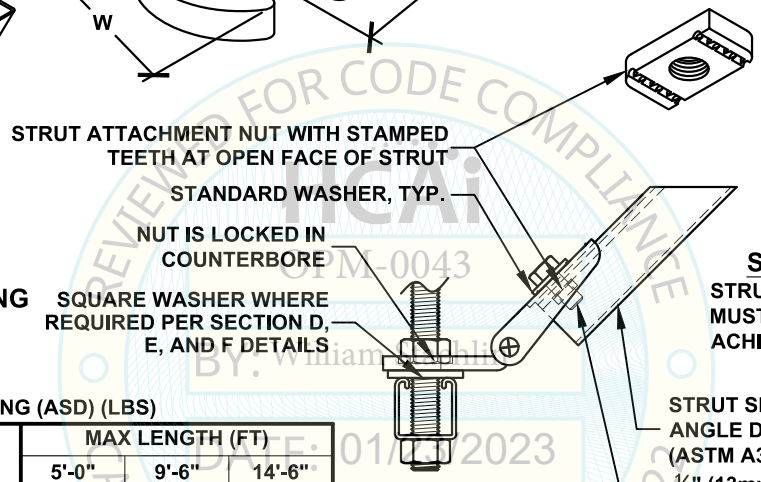

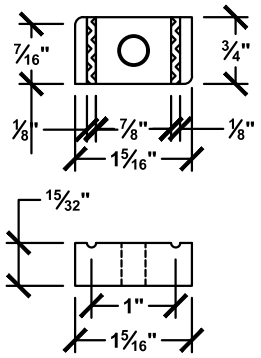

STRUT NUT DIMENSIONS[2]

STRUT ATTACHMENT NUT (ASTM A36)
MUST HAVE STAMPED TEETH TO
ACHIEVE THESE VALUES.

BRACE MEMBER AXIAL RATING (ASD) (LBS)

AXIAL MEMBER	MAX LENGTH (FT)		
	5'-0"	9'-6"	14'-6"
1 5/8x1 5/8x12GA SINGLE STRUT	1600	850	475
1 5/8x1 5/8x12GA DOUBLE STRUT	3950	2200	1200
L2x2x1/4	5790	1970	920
L3x3x1/4	14400	6200	3000

NOTE: STRUT MUST BE ASTM A1011SS GR 33 COLD ROLLED MILD STEEL, SLOTTED, PUNCHED OR SOLID (REF X7.0 & X7.1). DOUBLE STRUT MUST BE MINIMUM 2'-0" LONG. ANGLE MUST BE A36 STEEL.

NOTE: NOT TO BE USED AS A HANGER FOR EQUIPMENT, DUCTWORK OR PIPING. TO BE USED AS A SEISMIC RESTRAINT ONLY.

STRUT SHOWN MAY BE STEEL ANGLE DRILLED TO SUIT. (ASTM A36, Fy = 36 KSI)
1/2" (13mm) DIA. BOLTS (ASTM A307) MIN. (1) REQUIRED PER SHB.
TORQUE BOLTS TO 50 FT-LBS (68 Nm)
(REFER TO PAGE X2.3 FOR ATTACHMENT DETAILS) FOR STEEL ANGLE, 2 BOLTS WITH STANDARD NUTS ARE REQUIRED.
HOLES IN ANGLE TO BE 9/16" DIAMETER.

TYPE SHB DIMENSIONS & RATINGS (ASD)

SIZE	ROD DIA. (RD)		COUNTERBORED HOLE DIA. (CH) x DEPTH (D)		W		A		LATERAL LOAD RATINGS [3]					
									30° - 45° [1]			46° - 60° [1]		
	(in)	(mm)	(in)	(mm)	(in)	(mm)	(in)	(mm)	lbs	kN	kg	lbs	kN	kg
SHB-3/8	3/8	10	3/4 x 3/32	19 x 24	2	51	2	51	1420	6.3	644	1000	4.5	454
SHB-1/2	1/2	13	1 x 5/32	25 x 4	2	51	2	51	1710	7.6	775	1280	5.7	581
SHB-5/8	5/8	16	1 3/16 x 5/32	30 x 4	2 1/8	54	1 15/16	49	1520	6.8	690	1100	4.9	499
SHB-3/4	3/4	19	1 7/16 x 5/32	37 x 4	2 1/4	57	1 7/8	48	1660	7.4	753	1040	4.6	471

1. BRACE ANGLE MEASURED FROM HORIZONTAL.
2. REFER TO PAGE X4.0 FOR STRUT NUT WITH STUD (MW-SSN) WITH BREAK-OFF NUT (MW-BON) OPTION TO STRUT NUT AND HEX BOLT.
3. ATTACHMENT TO STEEL OR OTHER SUBSTRATES (e.g., CONCRETE, WOOD) MAY GOVERN THE DESIGN OF THE OVERALL BRACE ASSEMBLY AND SHALL BE EVALUATED ON A PROJECT BY PROJECT BASIS PER ATTACHMENT LOAD RATINGS IN SECTION N.

MASON WEST
1601 E. Miraloma Ave. Placentia, CA 92870
TEL (714) 630 - 0701, www.masonwest.com

Jiefu "Jeff" Zhang, SE
California SE No. S5270

PAGE
X2.1

REVIEWED FOR CODE COMPLIANCE
ICAI
OPM-0043
BY: William Staehlin
DATE: 01/23/2023

MASON IND. N.Y. SSB - SEISMIC SOLID BRACE

FM APPROVED

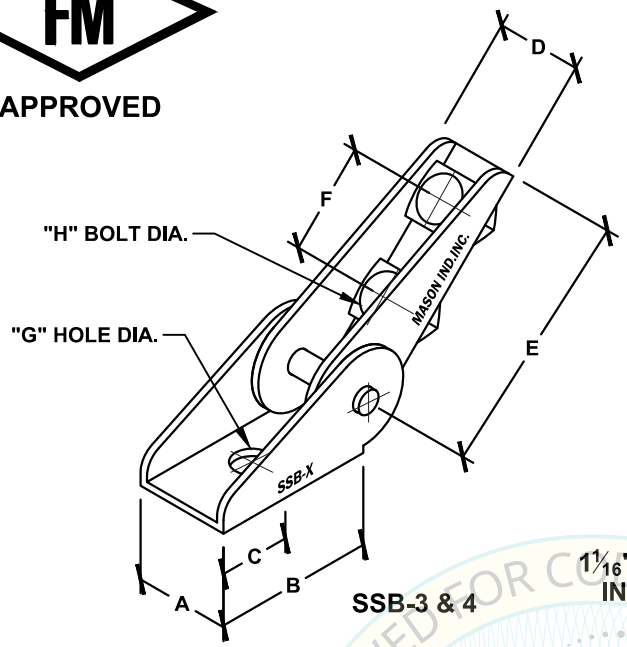

SSB-3 & 4

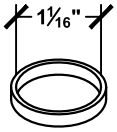

1 1/16" ID SSB-4 STEEL INSERT WASHER

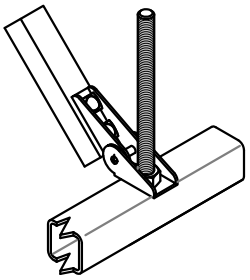

LONGITUDINAL BRACING

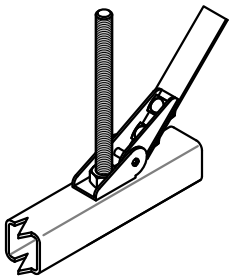

TRANSVERSE BRACING

FINISH:
ALL PARTS ARE ZINC ELECTROPLATED

NOTE: NOT TO BE USED AS A HANGER FOR EQUIPMENT, DUCTWORK OR PIPING.
TO BE USED AS A SEISMIC RESTRAINT ONLY.

HCAi
OPM-0043
BY: William Staehlin
DATE: 01/23/2023
REVIEWED FOR CODE COMPLIANCE
CALIFORNIA BUILDING CODE 2022

BRACE MEMBER AXIAL RATING (ASD) (LBS)

AXIAL MEMBER	MAX LENGTH (FT)		
	5'-0"	9'-6"	14'-6"
L3x3x1/4	14400	6200	3000
L4x4x1/4	20600	13600	6800

NOTE: ANGLE MUST BE A36 STEEL.

TYPE SSB DIMENSIONS (inches mm)

SIZE	A		B		C		D		E		F		G		H	
SSB-3	2	51	3 1/2	89	1 3/4	44	1 7/16	37	4 3/4	121	2	51	13/16	21	1/2	19
SSB-4	3 1/8	79	5	127	2 1/2	64	1 15/16	49	5 3/4	146	2 1/4	57	1 5/16	33	5/8	25

TYPE SSB ASSEMBLY RATINGS (ASD)

SIZE [3]	ROD/BOLT SIZE (in)	ROD/BOLT SIZE (mm)	LATERAL LOAD RATINGS [2] 30° - 45° [1] lbs	kN	kg	46° - 60° [1] lbs	kN	kg
SSB-3	3/4	19	5640	25.0	2557	3360	14.9	1523
SSB-4	1	25	6410	28.5	2906	4280	19.0	1940
SSB-4	1 1/4	32	6410	28.5	2906	4280	19.0	1940

1. BRACE ANGLE MEASURED FROM HORIZONTAL.
2. ATTACHMENT TO STEEL OR OTHER SUBSTRATES (e.g., CONCRETE, WOOD) MAY GOVERN THE DESIGN OF THE OVERALL BRACE ASSEMBLY AND SHALL BE EVALUATED ON A PROJECT BY PROJECT BASIS PER ATTACHMENT LOAD RATINGS IN SECTION N.
3. WHEN USING SSB-4 WITH 1" ROD/BOLT, 1 1/16" ID RING IS REQUIRED.

MASON WEST
1601 E. Miraloma Ave. Placentia, CA 92870
TEL (714) 630 - 0701, www.masonwest.com

Jiefu "Jeff" Zhang, SE
California SE No. S5270

PAGE
X2.2

SSBS / SHB ALTERNATE CONNECTIONS

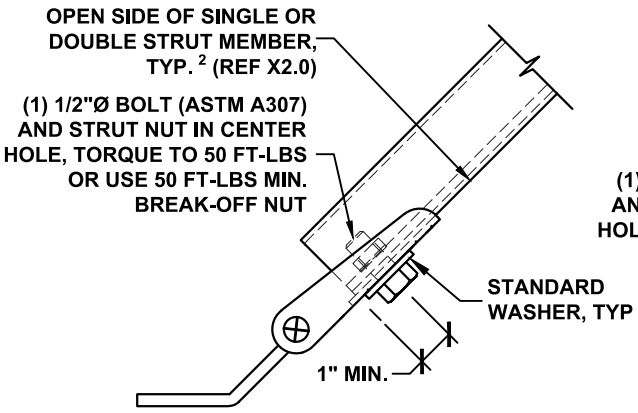

SSBS (1) BOLT ATTACHMENT TO STRUT

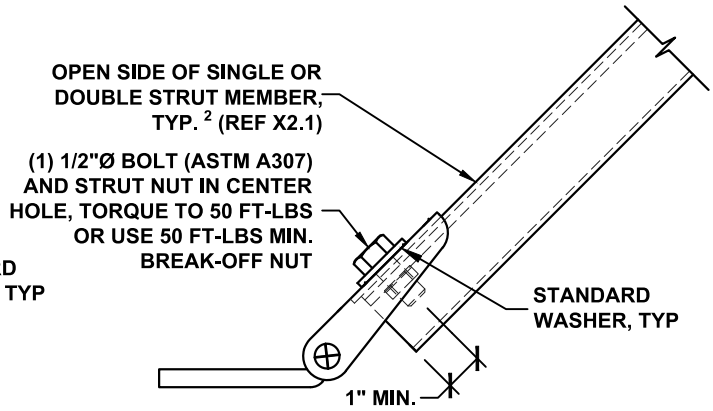

SHB (1) BOLT ATTACHMENT TO STRUT

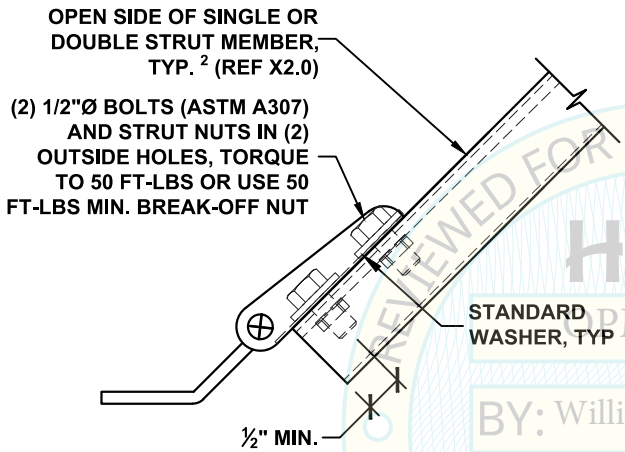

SSBS (2) BOLT ATTACHMENT TO STRUT

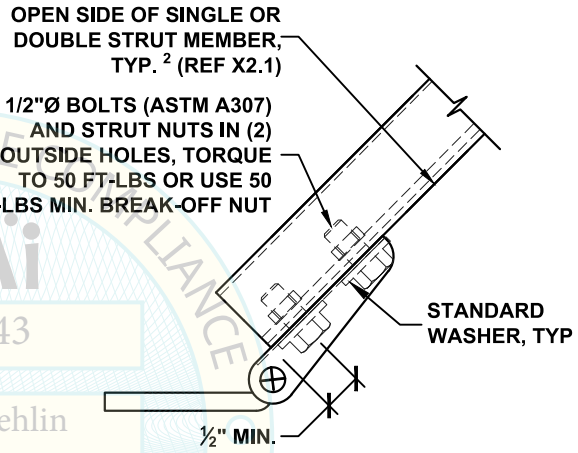

SHB (2) BOLT ATTACHMENT TO STRUT

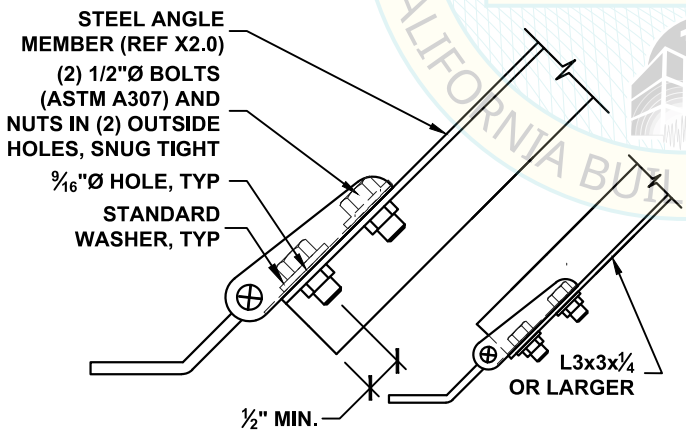

SSBS (2) BOLT ATTACHMENT TO STEEL ANGLE

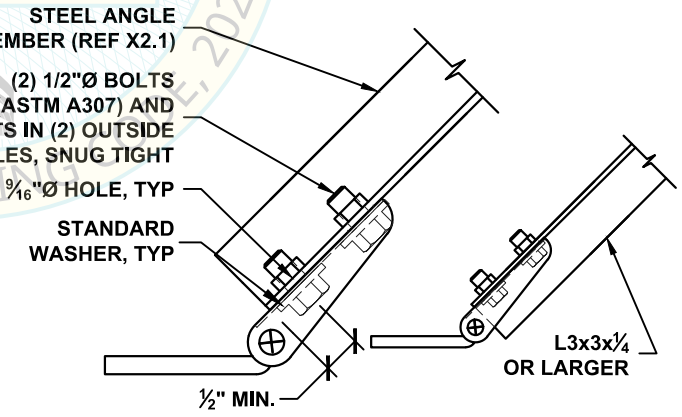

SHB (2) BOLT ATTACHMENT TO STEEL ANGLE

NOTES:
1. MW-SSN AND MW-BON MAY BE SUBSTITUTED FOR ½"Ø BOLT AND STRUT NUT DETAILED ABOVE. (REF PAGE X4.0)
2. FOR INSTALLATION TO CLOSED SIDE OF STRUT MEMBER, USE ½"Ø BOLT(S) (ASTM A307) AND NUTS.

MASON WEST
1601 E. Miraloma Ave. Placentia, CA 92870
TEL (714) 630 - 0701, www.masonwest.com

Jiefu "Jeff" Zhang, SE
California SE No. S5270

PAGE
X2.3

REVIEWED FOR CODE COMPLIANCE
CALIFORNIA BUILDING CODE, 2022
HCAi
OPM-0043
BY: William Staehlin
DATE: 01/23/2023

MW-KY SHB KEY

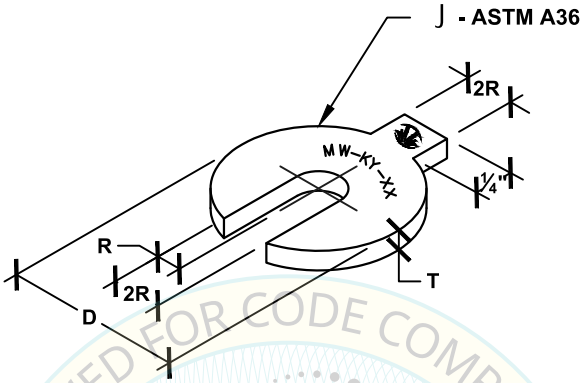

REVIEWED FOR CODE COMPLIANCE
HCAi
OPM-0043
BY: William Staehlin
DATE: 01/23/2023
CALIFORNIA BUILDING CODE, 2022

MW-KY DIMENSIONS

SIZE	R	D	T
38	3/16	11/16	3/32
50	1/4	15/16	1/8
63	5/16	1 1/8	1/8
75	3/8	1 3/8	1/8

MASON WEST
1601 E. Miraloma Ave. Placentia, CA 92870
TEL (714) 630 - 0701, www.masonwest.com

Jiefu "Jeff" Zhang, SE
California SE No. S5270

PAGE
X2.4

MASON IND. N.Y. UCC - SEISMIC ROD CLAMPS FOR STRUT CHANNELS

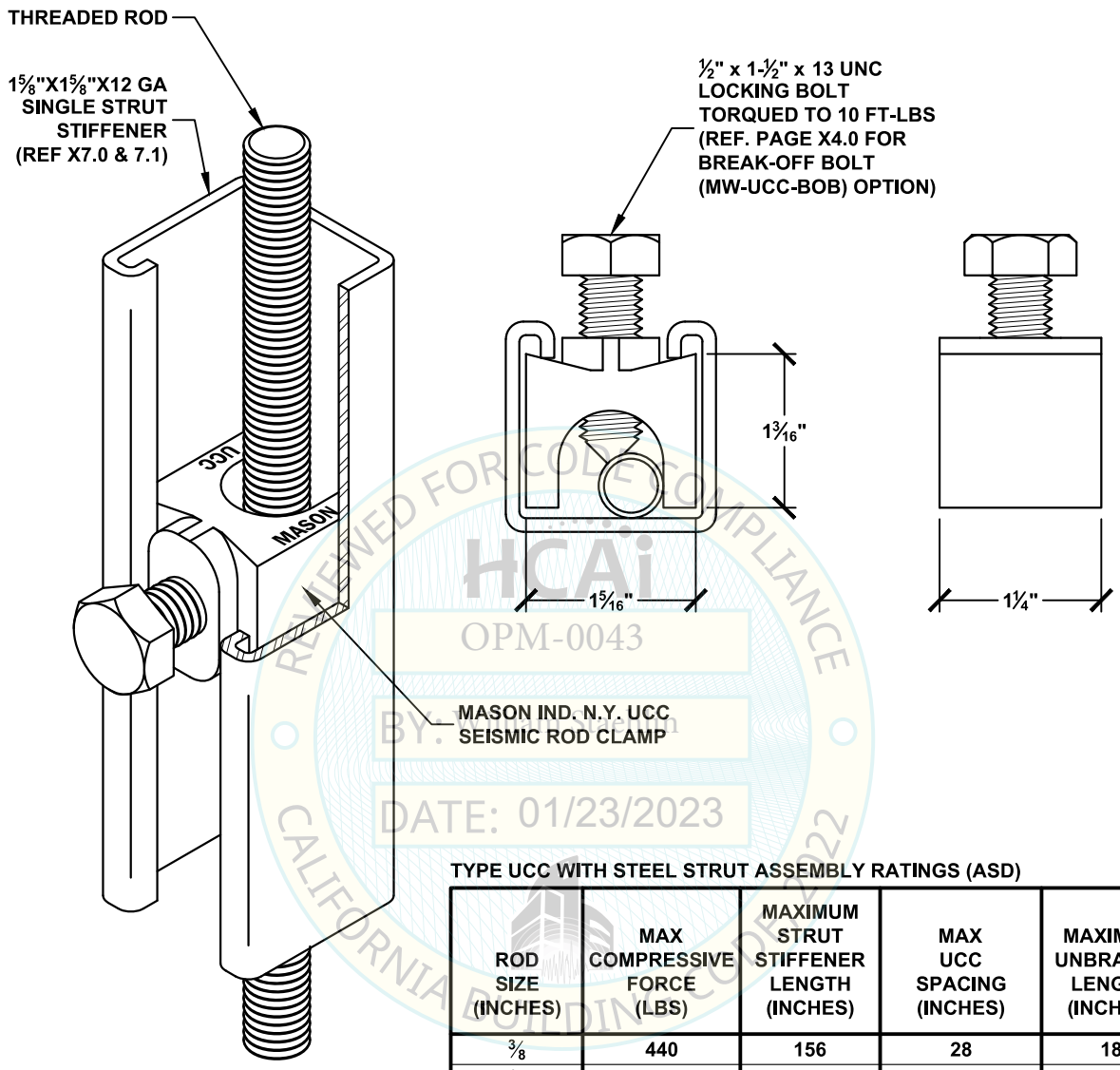

REVIEWED FOR CODE COMPLIANCE
CALIFORNIA BUILDING CODE 2022
HCAi
OPM-0043
BY: William Staehlin
DATE: 01/23/2023

TYPE UCC WITH STEEL STRUT ASSEMBLY RATINGS (ASD)

ROD SIZE (INCHES)	MAX COMPRESSIVE FORCE (LBS)	MAXIMUM STRUT STIFFENER LENGTH (INCHES)	MAX UCC SPACING (INCHES)	MAXIMUM UNBRACED LENGTH (INCHES)
⅜	440	156	28	18
½	735	156	38	25
⅝	1155	156	48	31
¾	1700	156	57	37
¾	3130	84	42	27

MASON WEST
1601 E. Miraloma Ave. Placentia, CA 92870
TEL (714) 630 - 0701, www.masonwest.com

Jiefu "Jeff" Zhang, SE
California SE No. S5270

PAGE
X3.0

MASON IND. N.Y. SRC - SEISMIC ROD CLAMPS FOR STEEL ANGLES

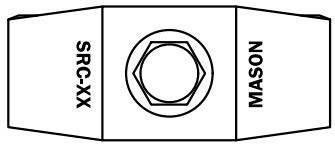

PRODUCT IDENTIFICATION

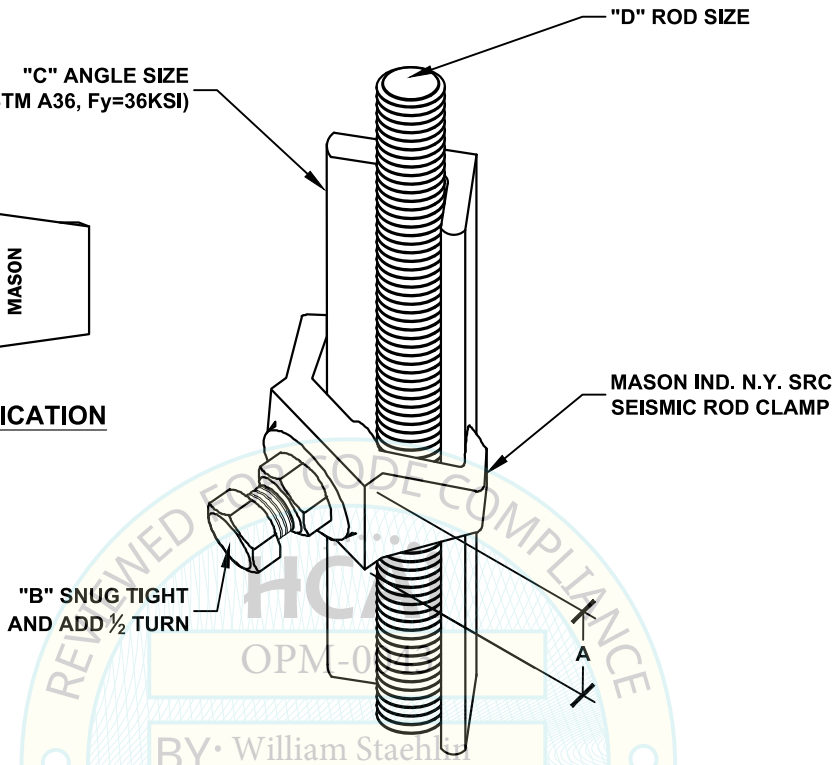

REVIEWED FOR CODE COMPLIANCE
HCAI
OPM-0043
BY: William Staehlin
DATE: 01/23/2023
CALIFORNIA BUILDING CODE, 2022

MASON IND. N.Y. SRC - SEISMIC ROD CLAMP FOR STEEL ANGLE STIFFENER

SIZE	DIMENSIONS - INCHES (MM)				RATINGS (ASD)		MAXIMUM SRC SPACING (INCHES)	MAXIMUM UNBRACED LENGTH (INCHES)
	A	B	C	D	MAXIMUM COMPRESSION FORCE (LBS)	MAXIMUM LENGTH (INCHES)		
SRC - 1½	1 9/16 (40)	⅝ x 2 LONG (16 x 51 LONG)	1½x1½x¼ (38 x 38 x 6)	⅞	2339	132	66	43
				1	2945	120	77	50
SRC - 2	1¾ (44)	⅝ x 3 LONG (16 x 76 LONG)	2x2x¼ (51 x 51 x 6)	1	3990	132	66	43
				1¼	4686	120	95	62
				1¼	8458	84	71	46

MASON WEST
1601 E. Miraloma Ave. Placentia, CA 92870
TEL (714) 630 - 0701, www.masonwest.com

Jiefu "Jeff" Zhang, SE
California SE No. S5270

PAGE
X3.1

BREAK-OFF BOLT AND NUT HARDWARE

½" DIA BREAK-OFF BOLT FOR MASON IND. N.Y. UCC CLAMP (REF. X3.0) (NUT BREAKS OFF AT MIN. 10 FT-LBS)

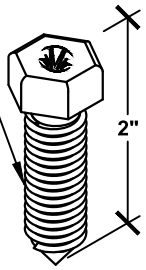

BREAK-OFF NUT FOR MASON IND. N.Y. SCB(H) CABLE BRACE BRACKETS (REF. X1.0 & X1.1) & MW-SPC PIPE CLAMPS (REF. X8.3 & X8.3.1)

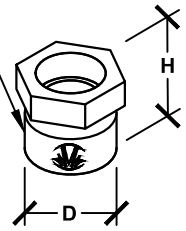

MW-SCB-BON DIMENSIONS

SIZE	D	H	FOR USE WITH	MINIMUM NUT BREAK-OFF TORQUE
5/8	15/16"	31/32"	SCB(H)-0,1	30 FT-LBS
3/4	1 1/16"	31/32"	SCB(H)-2	45 FT-LBS

MATERIAL:
AISI 12L14 CARBON STEEL
(F_y = 60 KSI (MIN), F_T =78 KSI (MIN))

MW-UCC-BOB

MW-SCB-BON & MW-SPC-BON

MW-SPC-BON DIMENSIONS

SIZE	D	H	FOR USE WITH	MINIMUM NUT BREAK-OFF TORQUE
3/8	9/16"	21/32"	SPC-13,15,20	20 FT-LBS
1/2	12/16"	26/32"	SPC-25,30,40,50	45 FT-LBS
5/8	15/16"	31/32"	SPC-60,80	75 FT-LBS
3/4	1 3/16"	1"	SPC-100,120	100 FT-LBS

½" DIA STRUT NUT WITH STUD (TESTED TO WEDGE TENSION TESTING METHOD IN ASTM F606)

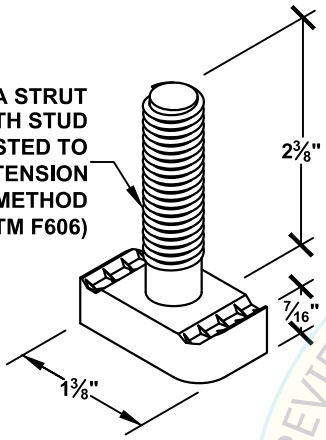

MATERIAL:
1020 MILD STEEL
(SPEC. GB 700 GRADE Q235B)
UNLESS OTHERWISE NOTED.

NOTE: EMBLEM STAMPED ON HEAD OF MW-SSN-1/2

MW-SSN-1/2

½" DIA BREAK-OFF NUT (NUT BREAKS OFF AT MIN. 50 FT-LBS)

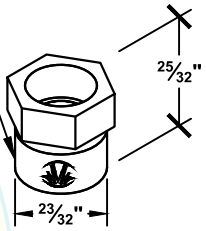

MW-BON-1/2

1 5/8X1 5/8X12 GA SINGLE STRUT OR LARGER OF SAME GAGE (NO DOUBLE STRUT FOR TENSION LOADS)

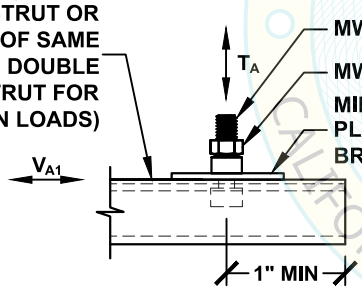

SHEAR LOAD PARALLEL TO STRUT

MW-SSN-1/2 & MW-BON-1/2 RATINGS (ASD)

TENSION, (T_A)	SHEAR, (V_{A1})	SHEAR, (V_{A2})
2620 LBS	1630 LBS	810 LBS

NOTE:
1. RATING ARE FOR (1) ATTACHMENT ONLY. CONDITIONS WITH MULTIPLE ATTACHMENTS WERE NOT TESTED.
2. COMBINED TENSION AND SHEAR LOADS SHALL BE CHECKED FOR UNITY, $T/T_A + V_1/V_{A1} + V_2/V_{A2}$ [1.0
3. ONLY (1) MW-SSN-1/2 SHALL OCCUR WITHIN SPAN S AND ANY ADJACENT MW-SSN-1/2 SHALL BE A MINIMUM OF 4" AWAY.
4. FOR SHEAR LOADS APPLIED AT AN ANGLE UP TO 45°, THE 3" MIN. EDGE DISTANCE IS REQUIRED.

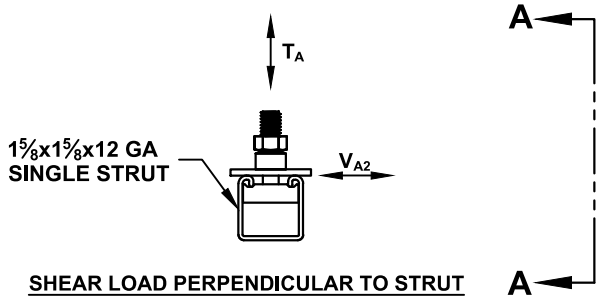

SHEAR LOAD PERPENDICULAR TO STRUT

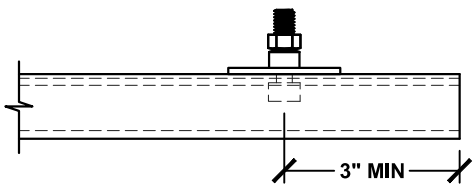

SECTION A-A

REVIEWED FOR CODE COMPLIANCE
HCAi
OPM-0043
BY: William Staehlin
DATE: 01/23/2023
CALIFORNIA BUILDING CODE

MASON WEST
1601 E. Miraloma Ave. Placentia, CA 92870
TEL (714) 630 - 0701, www.masonwest.com

Jiefu "Jeff" Zhang, SE
California SE No. S5270

PAGE
X4.0

MW-MDI METAL DECK INSERT

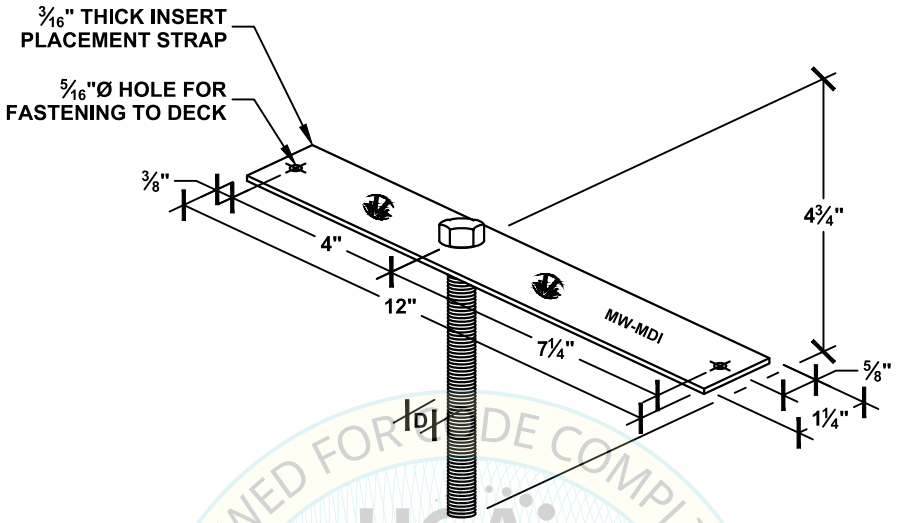

REVIEWED FOR CODE COMPLIANCE
CALIFORNIA BUILDING CODE, 2022
HCAi
OPM-0043
BY: William Staehlin
DATE: 01/23/2023

MODEL	D	ASTM A307 GR A BOLT CLASS 2A
MW-MDI-38	3/8"	3/8"Ø - 16 UNC THREADS
MW-MDI-50	1/2"	1/2"Ø - 13 UNC THREADS
MW-MDI-63	5/8"	5/8"Ø - 11 UNC THREADS

MASON WEST
1601 E. Miraloma Ave. Placentia, CA 92870
TEL (714) 630 - 0701, www.masonwest.com

Jiefu "Jeff" Zhang, SE
California SE No. S5270

PAGE
X5.7

MW - SAP - SEISMIC ANCHOR PLATE

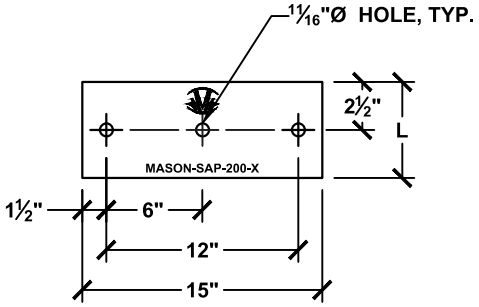

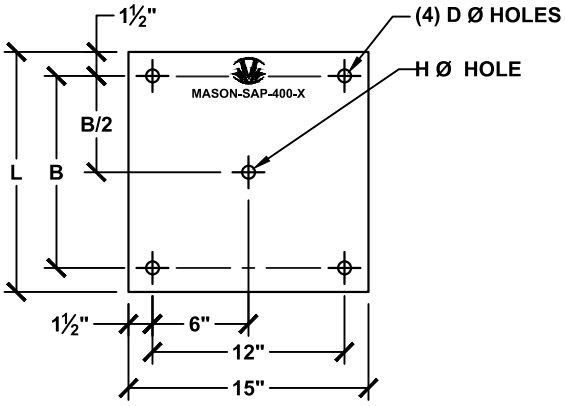



REVIEWED FOR CODE COMPLIANCE
HCAi
OPM-0043
BY: William Staehlin
DATE: 01/23/2023
CALIFORNIA BUILDING CODE, 2022

DIMENSION (IN) AND RATINGS (LBS) (ASD)

MODEL	TENSION, T	t	L	B	D	H
SAP 200-A	1080	3/8	5	N/A	N/A	N/A
SAP 200-B	1930	1/2	5			
SAP 400-A	2280	3/8	10	7	15/16	11/16
SAP 400-B	3600	3/8	15	12	11/16	11/16
SAP 400-C	3500	3/8	15	12	11/16	13/16
SAP 400-D	3500	3/8	15	12	11/16	1 1/16

MASON WEST
1601 E. Miraloma Ave. Placentia, CA 92870
TEL (714) 630 - 0701, www.masonwest.com

Jiefu "Jeff" Zhang, SE
California SE No. S5270

PAGE
X6.0

MW-WBB - WELDED BEAM BRACKET

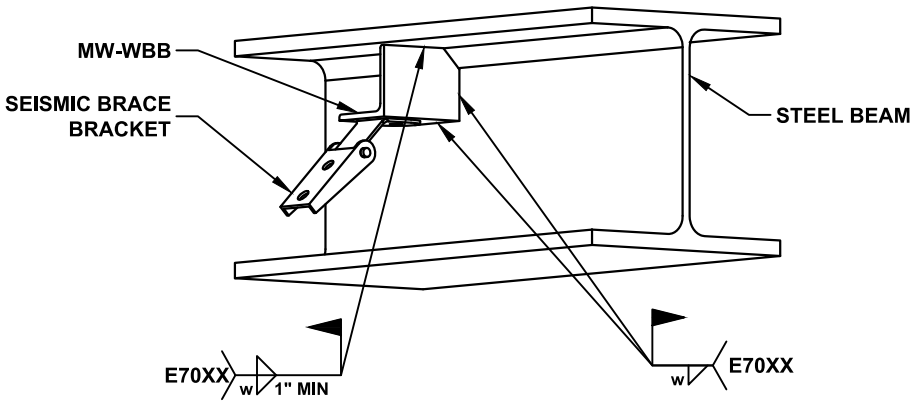

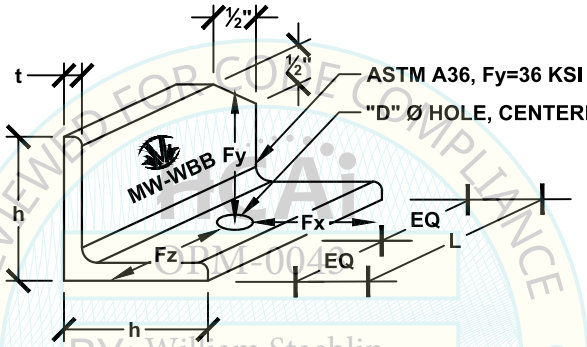

REVIEWED FOR CODE COMPLIANCE
OPM-0043
BY: William Staehlin
DATE: 01/23/2023
CALIFORNIA BUILDING CODE, 2022

MW-WBB RATINGS (ASD)

TYPE	h	t	L	w	"D"	VERTICAL	LATERAL	
						Fy	Fx	Fy
MW-WBB-38 MW-WBB-50 MW-WBB-63	4"	½"	4"	¼"	7/16" 9/16" 11/16"	2150 LBS	2150 LBS	2150 LBS
MW-WBB-75 MW-WBB-88 MW-WBB-100 MW-WBB-125	5"	¾"	6"	⅜"	13/16" 15/16" 1 1/16" 1 5/16"	3800 LBS	3800 LBS	3800 LBS

NOTE:
LOADING CAN BE APPLIED SIMULTANEOUSLY IN ALL THREE DIRECTIONS PROVIDED THE APPLIED LOADS ARE LESS THAN TABULATED LOADS SHOWN ON ABOVE TABLE.

MASON WEST
1601 E. Miraloma Ave. Placentia, CA 92870
TEL (714) 630 - 0701, www.masonwest.com

Jiefu "Jeff" Zhang, SE
California SE No. S5270

PAGE
X6.1

STRUT CHANNEL

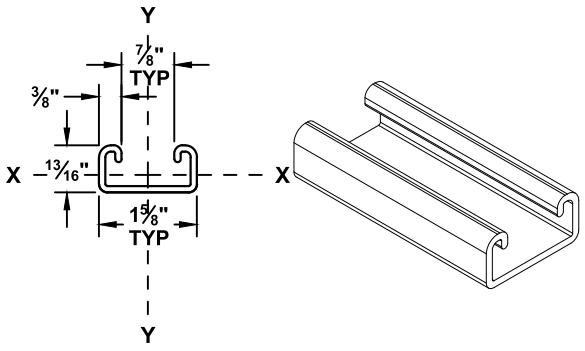

13/16 x 1 5/8 x 12ga
SINGLE STRUT

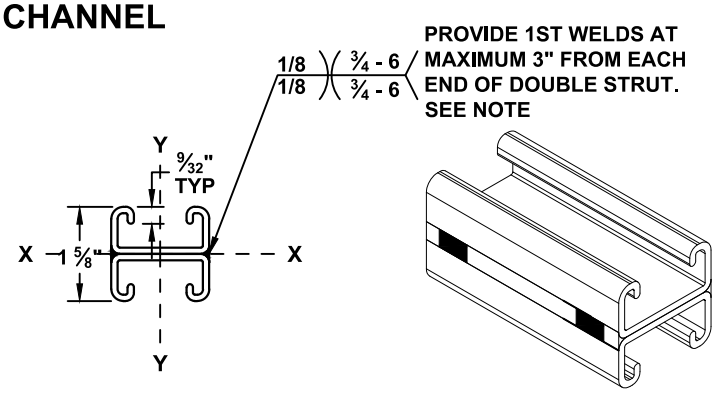

13/16 x 1 5/8 x 12ga
DOUBLE STRUT

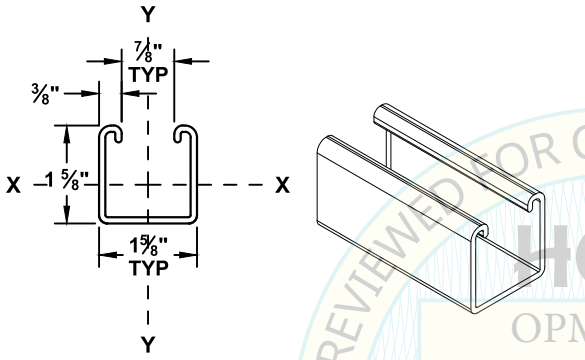

1 5/8 x 1 5/8 x 12ga
SINGLE STRUT

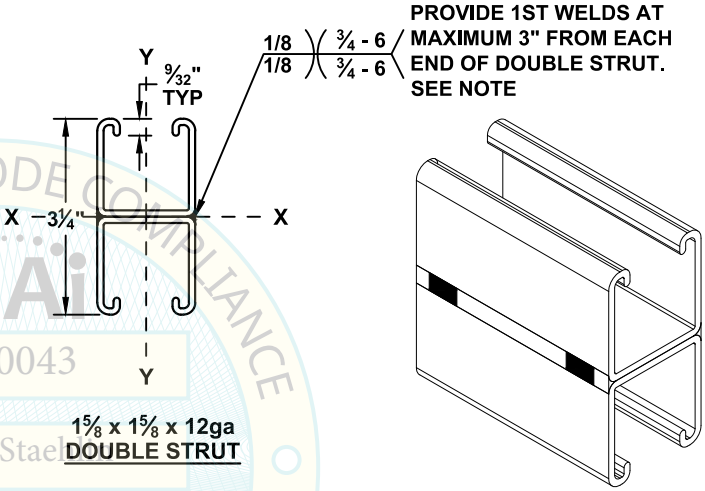

1 5/8 x 1 5/8 x 12ga
DOUBLE STRUT

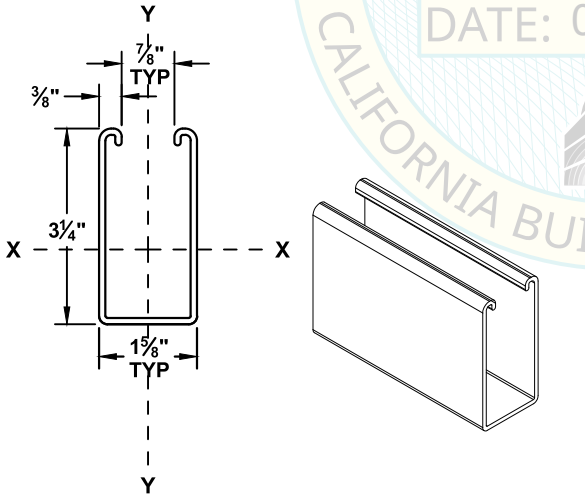

1 5/8 x 3 1/4 x 12ga
SINGLE STRUT

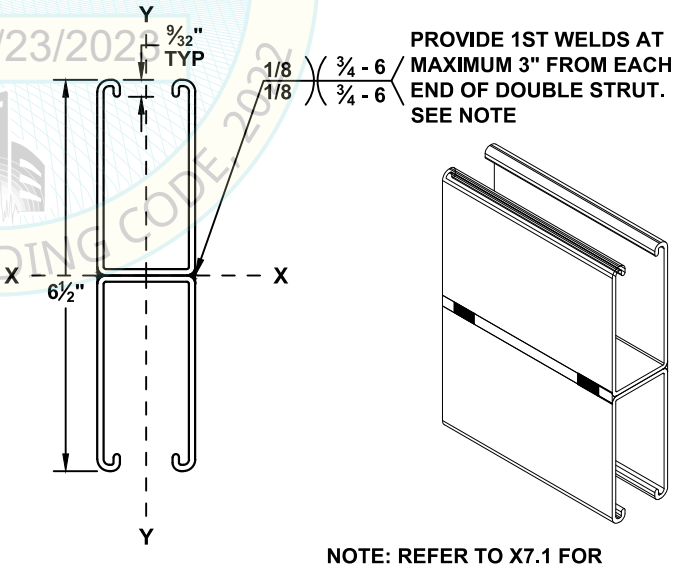

1 5/8 x 3 1/4 x 12ga
DOUBLE STRUT

NOTE: REFER TO X7.1 FOR MATERIAL GRADE AND MINIMUM SECTION PROPERTIES AND WELD OPTIONS.

REVIEWED FOR CODE COMPLIANCE
CALIFORNIA BUILDING CODE 2022
HCAi
OPM-0043
BY: William Staehlin
DATE: 01/23/2023

MASON WEST
1601 E. Miraloma Ave. Placentia, CA 92870
TEL (714) 630 - 0701, www.masonwest.com

Jiefu "Jeff" Zhang, SE
California SE No. S5270

PAGE
X7.0

STRUT CHANNEL SECTION PROPERTIES

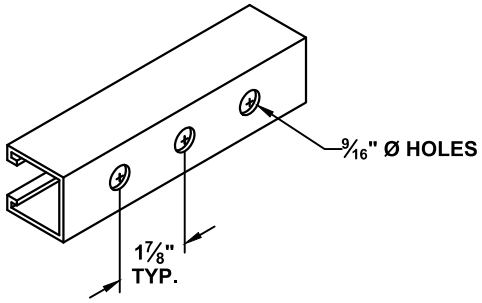

W/ PUNCHED HOLES

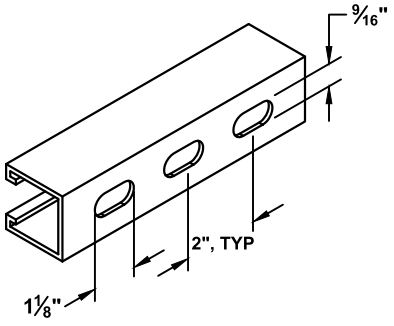

W/ SLOTTED HOLES

REVIEWED FOR CODE COMPLIANCE
HCAi
OPM-0043
BY: William Staehlin
DATE: 01/23/2023
CALIFORNIA BUILDING CODE 2022

MINIMUM STRUT CHANNEL SECTION PROPERTIES

STRUT MEMBER	WEIGHT (LBS/FT)	AREA (IN^2)	I_{xx} (IN^4)	S_{xx} (IN^3)	r_x (IN)	I_{yy} (IN^4)	S_{yy} (IN^3)	r_y (IN)	UNISTRUT/POWER-STRUT ALTERNATIVE[4]
13/16"x1 5/8"x12GA SINGLE STRUT	1.37	0.374	0.030	0.062	0.283	0.135	0.166	0.600	N/A
13/16"x1 5/8"x12GA DOUBLE STRUT	2.70	0.748	0.140	0.184	0.432	0.270	0.332	0.600	P4521/PS 520 2T3
1 5/8"x1 5/8"x12GA SINGLE STRUT	1.89	0.544	0.180	0.195	0.575	0.233	0.287	0.655	N/A
1 5/8"x1 5/8"x12GA DOUBLE STRUT	3.78	1.088	0.896	0.570	0.908	0.466	0.574	0.655	P1001/PS 200 2T3
1 5/8"x3 1/4x12GA SINGLE STRUT	3.05	0.844	1.073	0.609	1.102	0.429	0.529	0.696	N/A
1 5/8"x3 1/4"x12GA DOUBLE STRUT	6.10	1.768	6.064	1.896	1.852	0.859	1.057	0.696	P5001/PS 100 2 T3

NOTES

1. STRUT MATERIAL TO BE MANUFACTURED OF COLD ROLLED MILD STEEL MEETING ASTM-A1011SS GRADE 33.
2. 13/16" STRUT MAY BE SUBSTITUTED WITH 7/8" STRUT OF SAME 1 5/8" HEIGHT AND 12 ga THICKNESS MATERIAL.
3. RATED LOADS AT BOLTED CONNECTIONS SHOWN IN OPM-0043 ARE NOT VALID AT SLOTTED HOLES IN STRUT CHANNEL. ALL BOLT HOLES SHALL BE STANDARD HOLES (BOLT DIA. + 1/16")
4. UNISTRUT P4521, P1001, AND P5001 OR POWER-STRUT PS 520 2T3, PS 200 2T3, AND PS 100 2T3 DOUBLE STRUT MEMBERS WITH FACTORY SPOT WELDING ARE ACCEPTABLE IN LIEU OF STITCH WELDING OF OUTER STRUT WALLS. CONTRACTOR MAY USE OTHER MANUFACTURERS IF SPOT WELDING TESTING IS PROVIDED, SUBJECT TO REVIEW AND APPROVAL BY MASON WEST AND THE AUTHORITY HAVING JURISDICTION.

MASON WEST
1601 E. Miraloma Ave. Placentia, CA 92870
TEL (714) 630 - 0701, www.masonwest.com

Jiefu "Jeff" Zhang, SE
California SE No. S5270

PAGE
X7.1

MASON WEST MW-SSC AND MW-SSCE

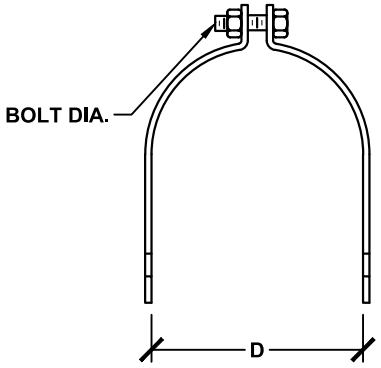

MATERIAL:

CLAMP: HOT ROLLED MILD STEEL ASTM A1011SS GR 33
BOLT: ASTM A307, GRADE A

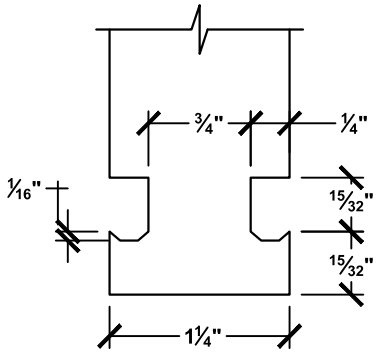

PARTIAL DETAIL OF MASON WEST MW-SSC, MW-SSCE

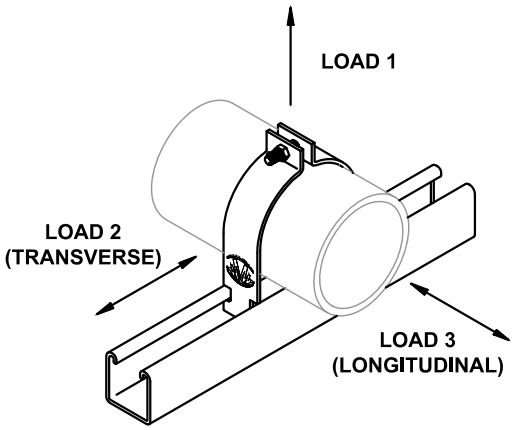

STEEL PIPE/RIGID STEEL CONDUIT						DESIGN LOADS (ASD)		
PART #	NOM. PIPE SIZE (IN)	D (IN)	STRAP GA.	BOLT (IN)	BOLT TORQUE (FT-LB)	MAX LOAD 1 (LBS)	MAX LOAD 2 (LBS)	MAX LOAD 3 (LBS)
SSC-13	1¼	1.66	14	¼	6	1470	130	220
SSC-15	1½	1.9	12	5/16	11	1660	150	160
SSC-20	2	2.375	12	5/16	11	2050	250	400
SSC-25	2½	2.875	12	5/16	11	2430	320	440
SSC-30	3	3.5	12	5/16	11	2820	390	460
SSC-40	4	4.5	11	⅜	20	3280	500	330
SSC-50	5	5.563	11	⅜	20	3740	770	580
SSC-60	6	6.625	10	⅜	20	2840	350	450
SSC-80	8	8.625	10	⅜	20	2840	350	440
SSC-100	10	10.75	10	⅜	20	2840	340	400
SSC-120	12	12.75	10	⅜	20	2840	350	410

EMT AND IMC CONDUIT						DESIGN LOADS (ASD)		
PART #	NOM. PIPE SIZE (IN)	D (IN)	STRAP GA.	BOLT (IN)	BOLT TORQUE (FT-LB)	MAX LOAD 1 (LBS)	MAX LOAD 2 (LBS)	MAX LOAD 3 (LBS)
SSCE-13	1¼	1.51	14	¼	6	2000	140	210
SSCE-15	1½	1.74	12	5/16	11	2240	180	290
SSCE-20	2	2.197	12	5/16	11	2730	240	350
SSC-25	2½	2.875	12	5/16	11	2880	240	390
SSC-30	3	3.5	12	5/16	11	3020	230	380
SSC-40	4	4.5	11	⅜	20	3150	280	430

1 - STEEL PIPE SHALL BE MINIMUM SCHEDULE 10. RIGID STEEL CONDUIT SHALL BE MANUFACTURED TO UL6 AND ANSI C80.3.
2 - FOR PIPING/CONDUIT SUSPENDED FROM STRUT, REFER TO PAGE X8.0.1 FOR COMBINED MAX VERTICAL AND LATERAL LOADS.
3 - LOAD 2 AND LOAD 3 MAY BE ROTATED UP TO 15° MAX FROM THE REFERENCED LOAD DIRECTION IN PLAN.

REVIEWED FOR CODE COMPLIANCE
OPM-0043
BY: William Staehlin
DATE: 1/23/2023
CALIFORNIA BUILDING CODE

MASON WEST
1601 E. Miraloma Ave. Placentia, CA 92870
TEL (714) 630 - 0701, www.masonwest.com

Jiefu "Jeff" Zhang, SE
California SE No. S5270

PAGE
X8.0

MASON WEST MW-SSC AND MW-SSCE

MAXIMUM ALLOWABLE LOADS FOR MASON WEST MW-SSC PIPE CLAMPS FOR SCH. 40 STEEL PIPING AND RIGID CONDUIT [5]								
			DESIGN LOADS (ASD) [1, 2, 4]					
			COMBINED MAX VERTICAL AND LATERAL LOAD [3]		COMBINED MAX VERTICAL AND LATERAL LOAD [3]		COMBINED MAX VERTICAL AND LATERAL LOAD FOR ALL-DIRECTIONAL BRACING	
PART #	NOM. PIPE SIZE (INCH)	MAX SUPPORT SPACING (FT)	LOAD 1 (LBS)	LOAD 2 Fp (LBS)	LOAD 1 (LBS)	LOAD 3 Fp (LBS)	LOAD 1 (LBS)	LOAD 2 or LOAD 3 Fp (LBS)
SSC-13	1 ¼	7	40	120	40	210	40	100
SSC-15	1 ½	9	60	150	60	150	60	90
SSC-20	2	10	90	240	90	380	90	190
SSC-25	2 ½	10	130	300	130	410	130	220
SSC-30	3	10	170	360	170	430	170	250
SSC-40	4	10	260	460	260	300	260	230
SSC-50	5	10	370	690	370	520	370	370
SSC-60	6	10	480	290	480	360	480	200
SSC-80	8	10	760	260	760	330	760	180

MAXIMUM ALLOWABLE LOADS FOR MASON WEST MW-SSCE AND MW-SSC PIPE CLAMPS FOR EMT AND IMC CONDUIT								
			DESIGN LOADS (ASD) [1, 2, 4]					
			COMBINED MAX VERTICAL AND LATERAL LOAD [3]		COMBINED MAX VERTICAL AND LATERAL LOAD [3]		COMBINED MAX VERTICAL AND LATERAL LOAD FOR ALL-DIRECTIONAL BRACING	
PART #	NOM. PIPE SIZE (INCH)	MAX SUPPORT SPACING (FT)	LOAD 1 (LBS)	LOAD 2 Fp (LBS)	LOAD 1 (LBS)	LOAD 3 Fp (LBS)	LOAD 1 (LBS)	LOAD 2 or LOAD 3 Fp (LBS)
SSCE-13	1 ¼	10	40	140	40	210	40	110
SSCE-15	1 ½	10	50	180	50	290	50	140
SSCE-20	2	10	70	230	70	340	70	170
SSC-25	2 ½	10	110	230	110	370	110	180
SSC-30	3	10	150	220	150	360	150	170
SSC-40	4	10	230	260	230	400	230	200

1 - REFER TO PAGE X8.0 FOR LOAD DIRECTION, IDENTIFICATION, AND BALANCE OF INFORMATION.
2 - THE COMBINED MAX VERTICAL AND LATERAL LOADS SHOWN ABOVE ARE APPLICABLE FOR PIPING/CONDUIT SUSPENDED FROM STRUT, WHERE PIPE CLAMPS RESIST PULLOUT.
3 - THE LATERAL LOADS (Fp) SHOWN ABOVE CONSIDER LOADING AT 15 DEGREES MAX FROM THE REFERENCED LOAD DIRECTION.
4- THE COMBINED MAX VERTICAL AND LATERAL LOADS MAY BE ADJUSTED FOR SPECIFIC GRAVITY SUPPORT SPACING IF THE FOLLOWING IS SATISFIED. REFER TO PAGE X8.0 FOR MAX LOAD 1, 2, AND 3.

$T/(\text{MAX LOAD 1}) + L_T/(\text{MAX LOAD 2}) + L_L/(\text{MAX LOAD 3}) \leq 1.0$

T = GRAVITY LOAD + VERTICAL SEISMIC LOAD.
L_T = MAX TRANSVERSE LATERAL LOAD.
L_L = MAX LONGITUDINAL LATERAL LOAD.

5 - FOR SCH. 10 AND SCH. 80 STEEL PIPE, THE REGISTERED DESIGN PROFESSIONAL (RDP) SHALL CALCULATE THE COMBINED CLAMP CAPACITIES USING THE FORMULAS IN FOOTNOTE 4.

REVIEWED FOR CODE COMPLIANCE
HCAi
OPM-0043
BY: William Staehlin
DATE: 01/23/2023
CALIFORNIA BUILDING CODE, 2022

MASON WEST
1601 E. Miraloma Ave. Placentia, CA 92870
TEL (714) 630 - 0701, www.masonwest.com

Jiefu "Jeff" Zhang, SE
California SE No. S5270

MASON WEST MW-SCC

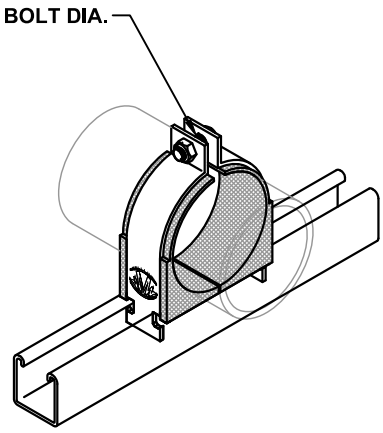

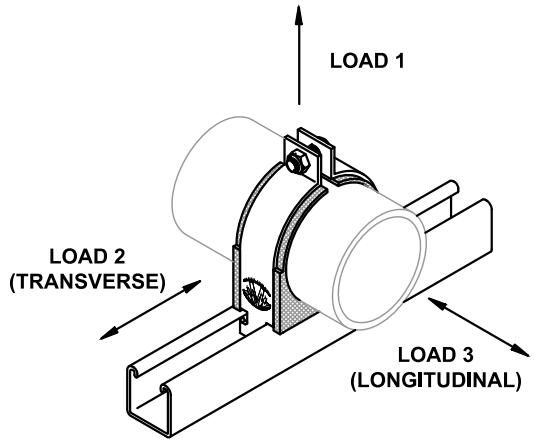

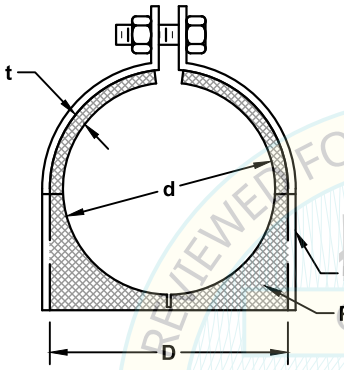

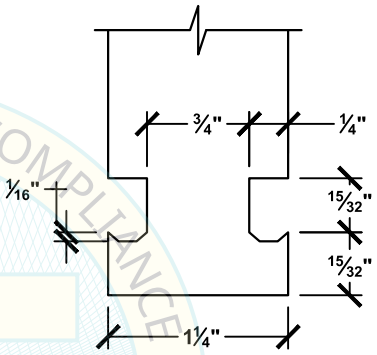

PARTIAL DETAIL OF MASON WEST MW-SCC

REVIEWED FOR CODE COMPLIANCE
HCAi
OPM-0043
BY: William Staehlin
DATE: 01/23/2023
CALIFORNIA BUILDING CODE 2022

MATERIAL:

CLAMP: HOT ROLLED MILD STEEL, ASTM A1011SS GR 33
CUSHION: THERMOPLASTIC ELASTOMER ASTM D4474TES0130 A90000
BOLT: ASTM A307, GRADE A

COPPER PIPE (TYPE K OR L)							BOLT TORQUE (FT-LB)	DESIGN LOADS (ASD)		
PART #	NOM. PIPE SIZE (IN)	d (IN)	D (IN)	t (IN)	STRAP GA.	BOLT (IN)		MAX LOAD 1 (LBS)	MAX LOAD 2 (LBS)	MAX LOAD 3 (LBS)
SCC-13	1¼	1.375	1.66	.1425	12	5/16	11	2380	130	210
SCC-15	1½	1.625	1.9	.1375	12	5/16	11	2290	170	170
SCC-20	2	2.125	2.375	.125	11	5/16	11	2570	190	240
SCC-25	2½	2.625	2.875	.125	11	5/16	11	2850	180	200
SCC-30	3	3.125	3.5	.1875	11	5/16	11	3130	210	280
SCC-40	4	4.125	4.5	.1875	11	3/8	20	3210	270	360
SCC-50	5	5.125	5.625	.1875	11	3/8	20	3290	300	300
SCC-60	6	6.125	6.625	.1875	11	3/8	20	3370	360	360

1 - FOR PIPING SUSPENDED FROM STRUT, REFER TO PAGE X8.1.1 FOR COMBINED MAX VERTICAL AND LATERAL LOADS.
2 - LOAD 2 AND LOAD 3 MAY BE ROTATED UP TO 15° MAX FROM THE REFERENCED LOAD DIRECTION IN PLAN.

MASON WEST
1601 E. Miraloma Ave. Placentia, CA 92870
TEL (714) 630 - 0701, www.masonwest.com

Jiefu "Jeff" Zhang, SE
California SE No. S5270

MASON WEST MW-SCC

MAXIMUM ALLOWABLE LOADS FOR MASON WEST MW-SCC PIPE CLAMPS FOR WATER FILLED COPPER PIPING [5]								
			DESIGN LOADS (ASD) [1, 2, 4]					
			COMBINED MAX VERTICAL AND LATERAL LOAD [3]		COMBINED MAX VERTICAL AND LATERAL LOAD [3]		COMBINED MAX VERTICAL AND LATERAL LOAD FOR ALL-DIRECTIONAL BRACING	
PART #	NOM. PIPE SIZE (INCH)	MAX SUPPORT SPACING (FT)	LOAD 1 (LBS)	LOAD 2 Fp (LBS)	LOAD 1 (LBS)	LOAD 3 Fp (LBS)	LOAD 1 (LBS)	LOAD 2 or LOAD 3 Fp (LBS)
SCC-13	1 ¼	7	30	130	30	210	30	100
SCC-15	1 ½	8	40	160	40	170	40	110
SCC-20	2	8	50	180	50	240	50	130
SCC-25	2 ½	9	80	180	80	190	80	120
SCC-30	3	10	110	200	110	270	110	150
SCC-40	4	10	180	250	180	330	180	180
SCC-50	5	10	260	270	260	270	260	170
SCC-60	6	10	350	320	350	320	350	200

1 - REFER TO PAGE X8.1 FOR LOAD DIRECTION, IDENTIFICATION, AND BALANCE OF INFORMATION.
2 - THE COMBINED MAX VERTICAL AND LATERAL LOADS SHOWN ABOVE ARE APPLICABLE FOR PIPING/CONDUIT SUSPENDED FROM STRUT, WHERE PIPE CLAMPS RESIST PULLOUT.
3 - THE LATERAL LOADS (Fp) SHOWN ABOVE CONSIDER LOADING AT 15 DEGREES MAX FROM THE REFERENCED LOAD DIRECTION.
4- THE COMBINED MAX VERTICAL AND LATERAL LOADS MAY BE ADJUSTED FOR SPECIFIC GRAVITY SUPPORT SPACING IF THE FOLLOWING IS SATISFIED. REFER TO PAGE X8.1 FOR MAX LOAD 1, 2, AND 3.

$T/(\text{MAX LOAD 1}) + L_T/(\text{MAX LOAD 2}) + L_L/(\text{MAX LOAD 3}) \leq 1.0$

T = GRAVITY LOAD + VERTICAL SEISMIC LOAD.
L_T = MAX TRANSVERSE LATERAL LOAD.
L_L = MAX LONGITUDINAL LATERAL LOAD.

5 - FOR VAPOR FILLED COPPER PIPE, THE REGISTERED DESIGN PROFESSIONAL (RDP) SHALL CALCULATE THE COMBINED CLAMP CAPACITIES USING THE FORMULAS IN FOOTNOTE 4.

VERIFIED FOR CODE COMPLIANCE
ICAI
OPM-0043
BY: William Staehlin
DATE: 01/23/2023
CALIFORNIA BUILDING CODE, 2022

MASON WEST
1601 E. Miraloma Ave. Placentia, CA 92870
TEL (714) 630 - 0701, www.masonwest.com

Jiefu "Jeff" Zhang, SE
California SE No. S5270

MW-SSC, MW-SSCE & MW-SCC INSTALLATION

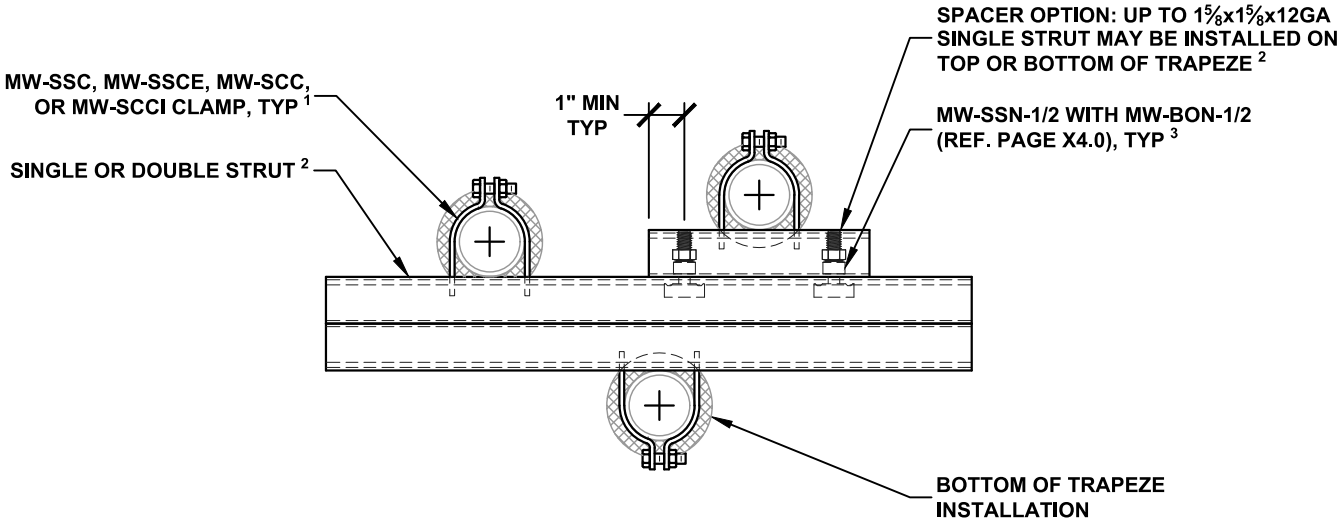

STRUT TRAPEZE INSTALLATION

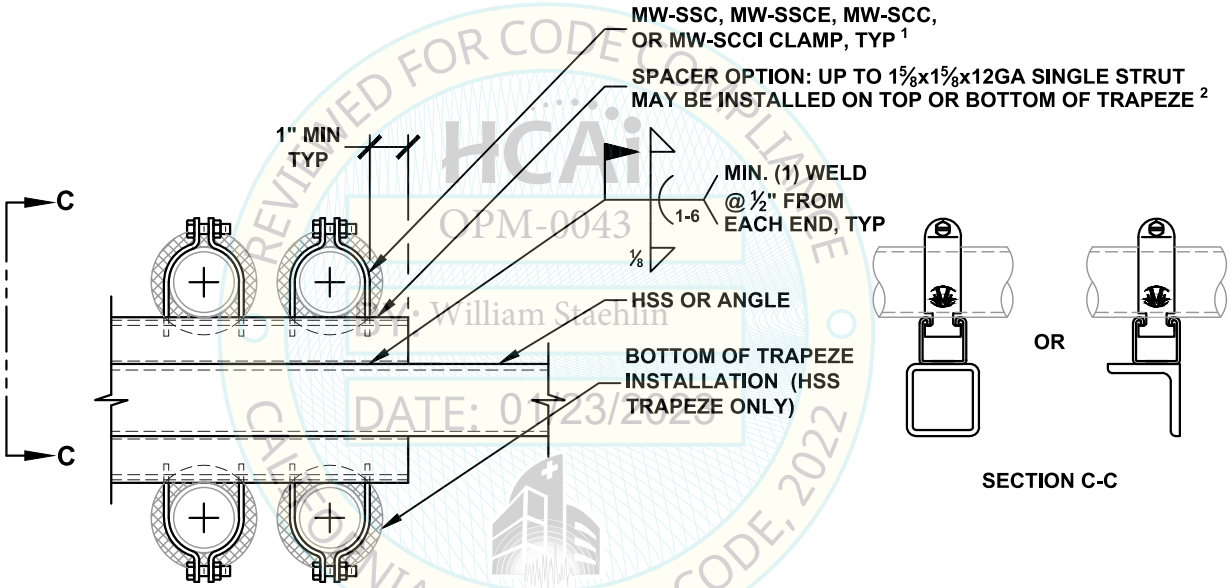

STEEL TRAPEZE INSTALLATION

REVIEWED FOR CODE COMPLIANCE
HCAi
OPM-0043
Reviewed by: William Staehlin
DATE: 01/23/2023
CALIFORNIA BUILDING CODE, 2022

1. MASON WEST MW-SSC, MW-SSCE, MW-SCC, OR MW-SCCI PIPE CLAMPS CAN BE USED WITH THE FOLLOWING STRUT MEMBERS (REF. PAGE X7.0 & X7.1 FOR STRUT MEMBER DATA) :
   - 1 - 13/16x1⅝x12GA SINGLE STRUT
   - 2 - 13/16x1⅝x12GA DOUBLE STRUT
   - 3 - 1⅝x1⅝x12GA SINGLE STRUT
   - 4 - 1⅝x1⅝x12GA DOUBLE STRUT
   - 5 - 1⅝x3¼x12GA SINGLE STRUT
2. STRUT MEMBERS MAY BE PROVIDED WITH PUNCHED OR SLOTTED HOLES. (REF. PAGE X7.1)
3. MASON WEST MW-SSN-1/2 STRUT NUTS WITH MW-BON-1/2 NUTS MAY BE REPLACED WITH ½" STRUT NUTS AND BOLTS IF TORQUED TO 50 FT-LBS.

MASON WEST
1601 E. Miraloma Ave. Placentia, CA 92870
TEL (714) 630 - 0701, www.masonwest.com

Jiefu "Jeff" Zhang, SE
California SE No. S5270

PAGE
X8.2

MASON WEST MW-SPC

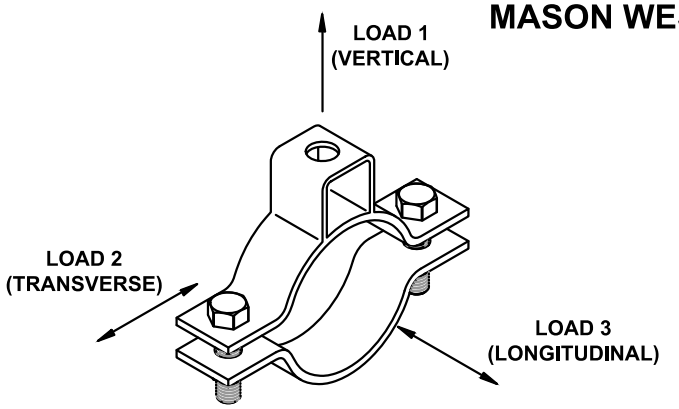

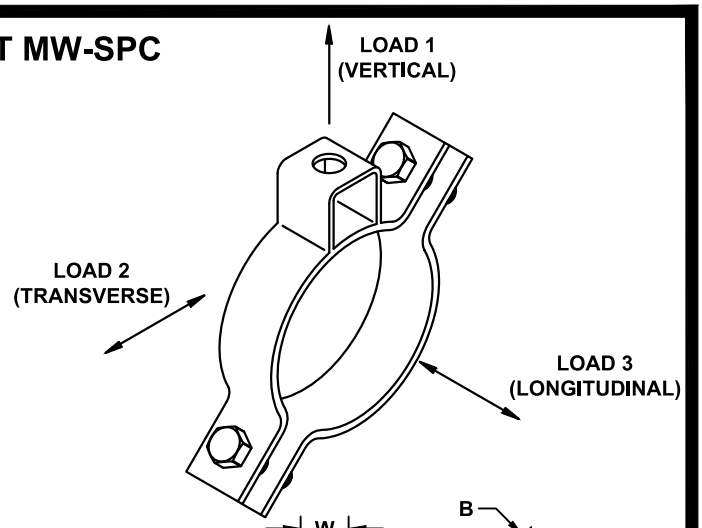

NOTE: EMBLEM STAMPED ON BOTTOM OF MW-SPC

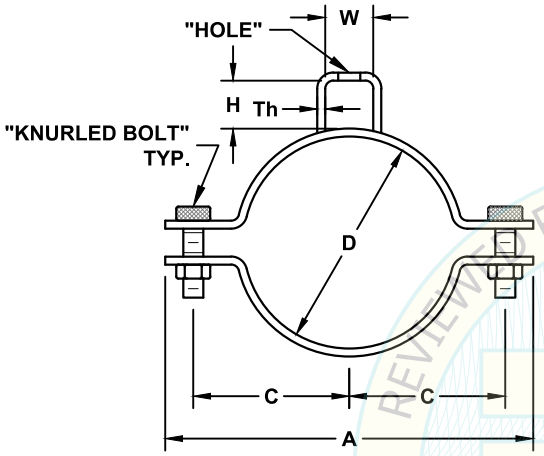

1 ¼"Ø TO 3"Ø

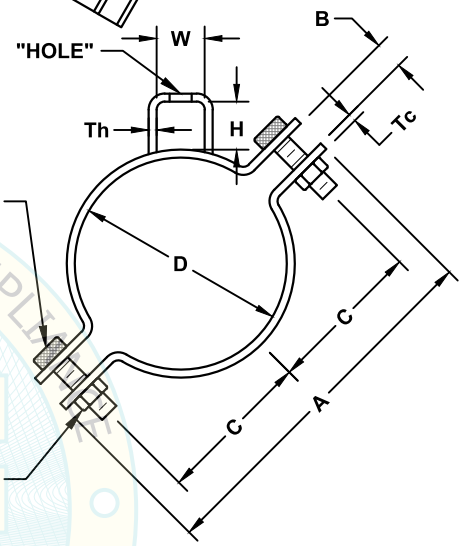

4"Ø TO 12"Ø

HCAi
OPM-0043
BY: William Staehlin
DATE: 01/23/2023
REVIEWED FOR CODE COMPLIANCE
CALIFORNIA BUILDING CODE 2022

MATERIAL:

CLAMP: AISI 1050 CARBON STEEL
BOLT: Q235 CARBON STEEL TESTED TO ASTM F606

PART #	NOM. PIPE SIZE (INCH)	A (INCH)	B (INCH)	C (INCH)	D (INCH)	Tc (INCH)	WIDTH (INCH)	BOLT DIA. (INCH)	MIN BOLT TORQUE (FT-LB)	H (INCH)	W (INCH)	Th (INCH)	HOLE DIA. (INCH)
SPC-13	1¼	4	½	1⅜	1.66	⅛	1	⅜	20	1¼	1¼	⅛	7/16
SPC-15	1½	4¼	½	1½	1.9	⅛	1	⅜	20	1¼	1¼	⅛	7/16
SPC-20	2	5¼	½	2	2.375	⅛	1	⅜	20	1¼	1¼	⅛	7/16
SPC-25	2½	6	⅝	2¼	2.875	3/16	1½	½	45	1¾	1⅞	3/16	9/16
SPC-30	3	7	⅝	2¾	3.5	3/16	1½	½	45	1¾	1⅞	3/16	9/16
SPC-40	4	8½	¾	3⅜	4.5	3/16	1½	½	45	1¾	1⅞	3/16	11/16
SPC-50	5	9⅜	¾	3 13/16	5.625	3/16	1½	½	45	1¾	1⅞	3/16	11/16
SPC-60	6	11½	⅞	4⅞	6.625	¼	2	⅝	75	2½	2½	⅜	13/16
SPC-80	8	13⅝	1	5 13/16	8.625	¼	2	⅝	75	2½	2½	⅜	13/16
SPC-100	10	16½	1	7¼	10.75	⅜	2½	¾	100	3¼	3¼	½	13/16
SPC-120	12	18½	1	8¼	12.75	⅜	2½	¾	100	3¼	3¼	½	13/16

NOTE: THIS CLAMP CAN BE USED FOR MINIMUM SCHEDULE 10 STEEL PIPE, NO-HUB CAST IRON PIPE AND RIGID STEEL CONDUIT. RIGID STEEL CONDUIT SHALL BE MANUFACTURED TO UL6 AND AISI C80.1

MASON WEST
1601 E. Miraloma Ave. Placentia, CA 92870
TEL (714) 630 - 0701, www.masonwest.com

Jiefu "Jeff" Zhang, SE
California SE No. S5270

PAGE
X8.3

MAXIMUM ALLOWABLE LOADS FOR MASON WEST MW-SPC PIPE CLAMPS FOR STEEL PIPING AND RIGID CONDUIT

PART #	NOM. PIPE SIZE (INCH)	DESIGN LOADS (ASD)						
		MAX VERTICAL LOAD ONLY [1]	MAX LATERAL LOADS [1]		COMBINED MAX VERTICAL AND LATERAL LOAD [1, 2]		COMBINED MAX VERTICAL AND LATERAL LOAD [1, 2]	
		LOAD 1 (LBS)	LOAD 2 (LBS)	LOAD 3 (LBS)	LOAD 1 (LBS)	LOAD 2 (LBS)	LOAD 1 (LBS)	LOAD 3 (LBS)
SPC-13	1¼	1210	350	420	40	340	40	410
SPC-15	1½	1210	350	420	60	340	60	400
SPC-20	2	1210	350	380	90	330	90	350
SPC-25	2½	2460	500	850	140	470	140	810
SPC-30	3	2460	500	800	200	460	200	740
SPC-40	4	2460	440	730	360	370	360	630
SPC-50	5	2460	440	850	550	340	550	660
SPC-60	6	6730	740	1680	820	650	820	1470
SPC-80	8	6730	740	1470	1440	580	1440	1150
SPC-100	10	6730	450	1470	2210	300	2210	980
SPC-120	12	6730	450	1440	3000	250	3000	800

MAXIMUM ALLOWABLE LOADS FOR MASON WEST MW-SPC PIPE CLAMPS FOR CAST IRON PIPING

PART #	NOM. PIPE SIZE (INCH)	DESIGN LOADS (ASD)						
		MAX VERTICAL LOAD ONLY [1]	MAX LATERAL LOADS [1]		COMBINED MAX VERTICAL AND LATERAL LOAD [1, 2]		COMBINED MAX VERTICAL AND LATERAL LOAD [1, 2]	
		LOAD 1 (LBS)	LOAD 2 (LBS)	LOAD 3 (LBS)	LOAD 1 (LBS)	LOAD 2 (LBS)	LOAD 1 (LBS)	LOAD 3 (LBS)
SPC-20	2	1210	190	460	60	180	60	440
SPC-30	3	2460	390	1000	100	380	100	960
SPC-40	4	2460	420	830	150	390	150	780
SPC-50	5	2460	420	930	200	380	200	850
SPC-60	6	6730	790	1830	260	760	260	1760
SPC-80	8	6730	790	1750	450	730	450	1630
SPC-100	10	6730	420	1490	670	380	670	1340
SPC-120	12	6730	420	1460	910	370	910	1260

REVIEWED FOR CODE COMPLIANCE
HCAi
OPM-0043
BY: William Staehlin
DATE: 01/23/2023
CALIFORNIA BUILDING CODE 2022

1 - REFER TO PAGE X8.3 FOR LOAD DIRECTION, IDENTIFICATION, AND BALANCE OF INFORMATION.

2 - THE MAX COMBINED VERTICAL AND LATERAL LOADS MAY BE ADJUSTED FOR SPECIFIC GRAVITY SUPPORT SPACING IF THE FOLLOWING IS SATISFIED:

$T/(\text{MAX LOAD 1}) + L_T/(\text{MAX LOAD 2}) \leq 1.0$

OR

$T/(\text{MAX LOAD 1}) + L_L/(\text{MAX LOAD 3}) \leq 1.0$

T = MAX VERTICAL LOAD, INCLUDING VERTICAL SEISMIC

L_T = MAX TRANSVERSE LATERAL LOAD ONLY

L_L = MAX LONGITUDINAL LATERAL LOAD ONLY

MASON WEST
1601 E. Miraloma Ave. Placentia, CA 92870
TEL (714) 630 - 0701, www.masonwest.com

Jiefu "Jeff" Zhang, SE
California SE No. S5270

MASON WEST MW-WPL
WELDED PIPE HANGER LUG

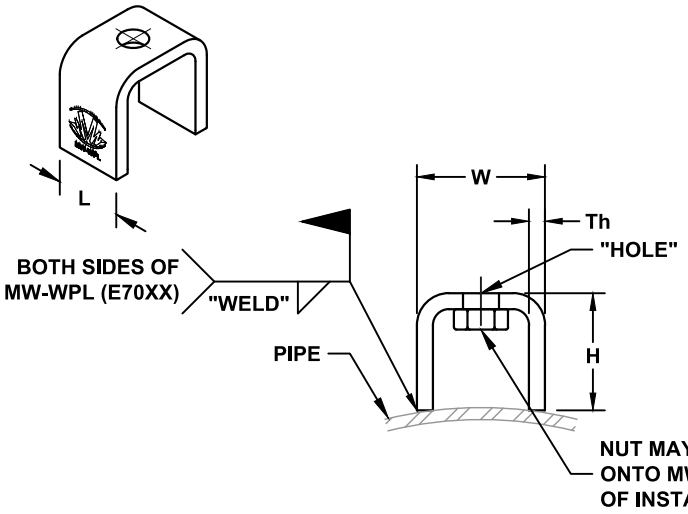

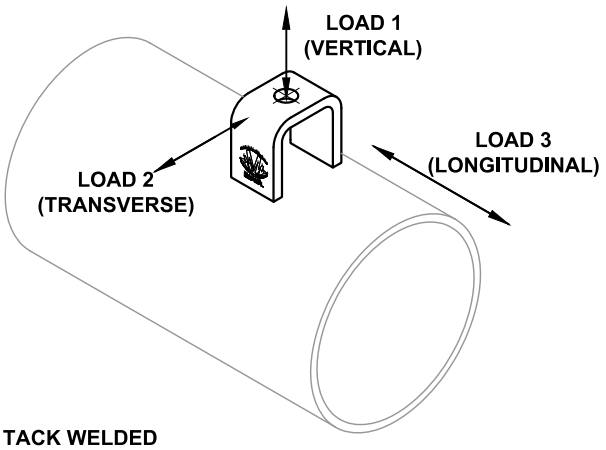

PART #	PIPE SIZE INCH	MAXIMUM HANGER SPACING FT	L INCH	H INCH	W INCH	Th INCH	HOLE SIZE INCH	WELD INCH	DESIGN LOADS (ASD)				
									MAXIMUM VERTICAL LOAD ONLY	COMBINED MAXIMUM VERTICAL AND LATERAL LOADS		COMBINED MAXIMUM VERTICAL AND LATERAL LOADS	
									LOAD 1 (LBS)	LOAD 1 (LBS)	LOAD 2 (LBS)	LOAD 1 (LBS)	LOAD 3 (LBS)
WPL-38	1 ¼ 1 ½ 2	10	2	1½	1½	⅛	7/16	⅛	720	540	175	720	450
WPL-50	2 ½ 3	12	2½	2	2	3/16	9/16	3/16	1320	780	350	1320	1050
WPL-63	4 5	16	3	2	2	¼	11/16	3/16	2880	1760	750	2400	1250
WPL-75	6 8	19	3½	3	3	⅜	13/16	¼	4800	3200	1250	3840	2500
WPL-75A	10 12 14 16 18	20	4	3	3½	⅝	13/16	5/16	8000	6000	2750	6000	4500
WPL-88	10 12	20	4	3	3	½	15/16	5/16	6900	6000	2500	6000	5000
WPL-100	14 16 18	20	5	4	4	⅝	1 1/16	5/16	8880	6900	3000	6900	7500
WPL-125	20 24	20	6	3	4	⅝	1 5/16	5/16	11400	10200	5750	10200	8000

1 - MW-WPL LUG IS MADE FROM ASTM A36 OR ASTM A500 GRADE B STEEL.
2 - PIPE/CONDUIT MATERIAL TO BE STANDARD SCHEDULE PIPE (MIN. SCH. 40S) MADE OF CARBON OR STAINLESS STEEL MATERIAL PER ASME B31.1 STANDARDS.
3 - WHEN USING MW-WPL WITH COMBINED VERTICAL AND LATERAL LOADS, EACH OF THE LOADS MUST BE BELOW WHAT IS SHOWN IN THE ABOVE TABLE.

REVIEWED FOR CODE COMPLIANCE
HCAi
OPM-0043
BY: William Staehlin
DATE: 01/23/2023
CALIFORNIA BUILDING CODE 2022

MASON WEST
1601 E. Miraloma Ave. Placentia, CA 92870
TEL (714) 630 - 0701, www.masonwest.com

Jiefu "Jeff" Zhang, SE
California SE No. S5270

PAGE
X8.4

MASON WEST MW-SCCI

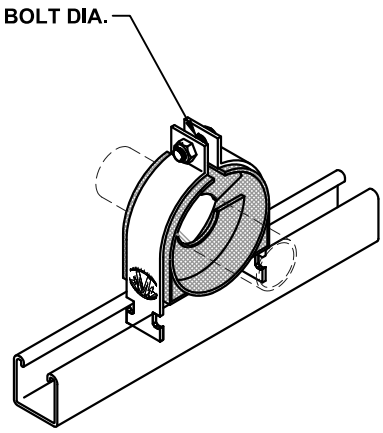

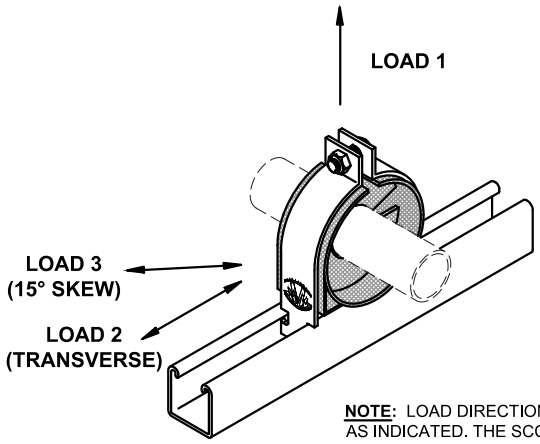

NOTE: LOAD DIRECTIONS ARE LIMITED AS INDICATED. THE SCCI IS NOT RATED IN THE LONGITUDINAL (AXIAL) DIRECTION BEYOND THE 10° SKEW.

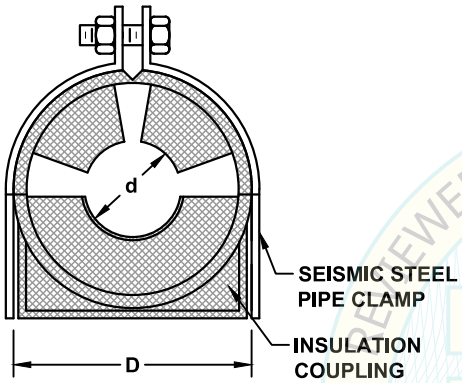

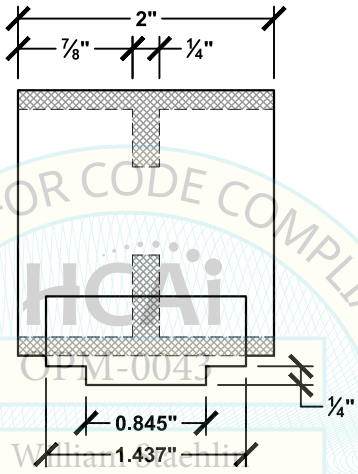

DETAIL OF INSULATION COUPLING HYDRA-ZORB KLO-SHURE

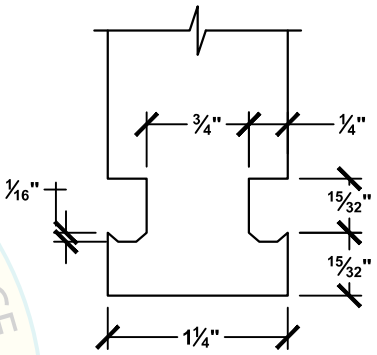

PARTIAL DETAIL OF MASON WEST MW-SCCI SEISMIC STEEL PIPE CLAMP

NOTE: MW-SCCI SEISMIC STEEL PIPE CLAMPS ARE SPECIALLY DESIGNED FOR USE WITH THE HYDRA-ZORB KLO-SHURE INSULATION COUPLINGS.

MATERIAL:

CLAMP: HOT ROLLED MILD STEEL, ASTM A1011SS GR 33
INSULATION COUPLING: THERMOPLASTIC TOD-247 MSDS NO. B26057
BOLT: ASTM A307, GRADE A

COPPER PIPE (TYPE K OR L) WITH ½" ELASTOMERIC OR FIBERGLASS INSULATION[1]						BOLT TORQUE (FT-LB)	DESIGN LOADS (ASD)		
PART #	NOM. PIPE SIZE	d	D[2]	STRAP GA.	BOLT		LOAD 1 (LBS)	LOAD 2 (LBS)	LOAD 3 (LBS)
SCCI-413	1¼	1.375	2.50	12	5/16	11	565	95	100
SCCI-415	1½	1.625	2.80	12	⅜	20	590	145	150
SCCI-420	2	2.125	3.27	12	⅜	20	710	175	180
SCCI-425	2½	2.625	3.75	12	⅜	20	800	195	205
SCCI-430	3	3.125	4.25	12	⅜	20	875	215	225
SCCI-440	4	4.125	5.25	12	⅜	20	980	255	265

1 - SPECIFY ELASTOMERIC OR FIBERGLASS INSULATION WHEN ORDERING BY ADDING AN E FOR ELASTOMERIC OR F FOR FIBERGLASS TO THE END OF THE PART #. i.e. SCCI-408E
2 - ±0.05" DIMENSIONS TO ACCOUNT FOR SMALL VARIATION IN ELASTOMERIC VERSUS FIBERGLASS INSULATION THICKNESSES.

MASON WEST
1601 E. Miraloma Ave. Placentia, CA 92870
TEL (714) 630 - 0701, www.masonwest.com

Jiefu "Jeff" Zhang, SE
California SE No. S5270

PAGE
X8.6

REVIEWED FOR CODE COMPLIANCE
CALIFORNIA BUILDING CODE, 2022
HCAi
OPM-0043
BY: William Staehlin
DATE: 01/23/2023

MASON WEST MW-SCCI

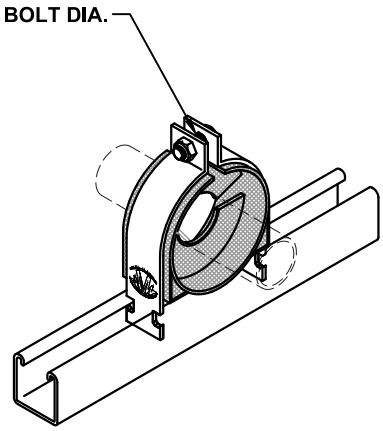

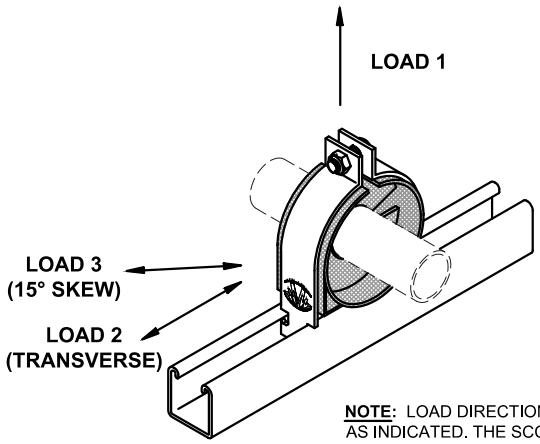

NOTE: LOAD DIRECTIONS ARE LIMITED AS INDICATED. THE SCCI IS NOT RATED IN THE LONGITUDINAL (AXIAL) DIRECTION BEYOND THE 10° SKEW.

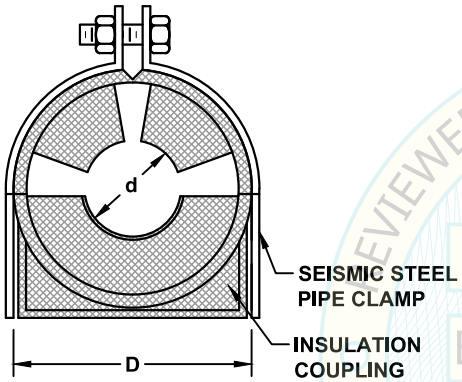

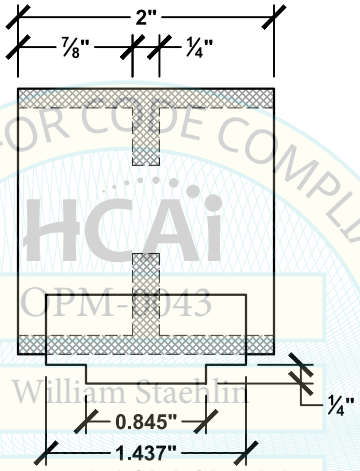

DETAIL OF INSULATION COUPLING HYDRA-ZORB KLO-SHURE

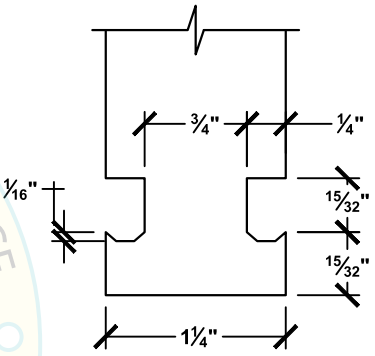

PARTIAL DETAIL OF MASON WEST MW-SCCI SEISMIC STEEL PIPE CLAMP

REVIEWED FOR CODE COMPLIANCE
HCAi
OPM-0043
BY: William Staehlin
DATE: 04/09/2023
CALIFORNIA BUILDING CODE 2022

MATERIAL:

CLAMP: HOT ROLLED MILD STEEL, ASTM A1011SS GR 33
INSULATION COUPLING: THERMOPLASTIC TOD-247 MSDS NO. B26057
BOLT: ASTM A307, GRADE A

NOTE: MW-SCCI SEISMIC STEEL PIPE CLAMPS ARE SPECIALLY DESIGNED FOR USE WITH THE HYDRA-ZORB KLO-SHURE INSULATION COUPLINGS.

COPPER PIPE (TYPE K OR L) WITH ¾" ELASTOMERIC INSULATION						BOLT TORQUE (FT-LB)	DESIGN LOADS (ASD)		
PART #	NOM. PIPE SIZE	d	D	STRAP GA.	BOLT		LOAD 1 (LBS)	LOAD 2 (LBS)	LOAD 3 (LBS)
SCCI-613	1¼	1.375	3	12	5/16	11	495	115	105
SCCI-615	1½	1.625	3.25	12	⅜	20	555	175	155
SCCI-620	2	2.125	3.75	12	⅜	20	680	215	195
SCCI-625	2½	2.625	4.25	12	⅜	20	780	245	220
SCCI-630	3	3.125	4.75	12	⅜	20	860	270	245
SCCI-640	4	4.125	5.75	12	⅜	20	980	320	290

MASON WEST
1601 E. Miraloma Ave. Placentia, CA 92870
TEL (714) 630 - 0701, www.masonwest.com

Jiefu "Jeff" Zhang, SE
California SE No. S5270

PAGE
X8.6.1

MASON WEST MW-SCCI

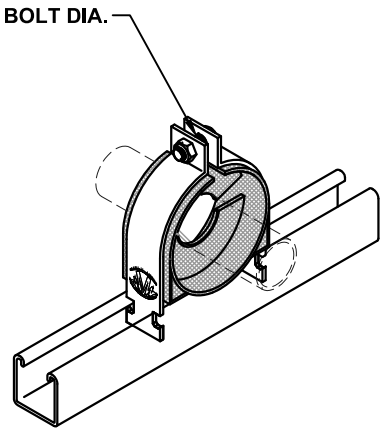

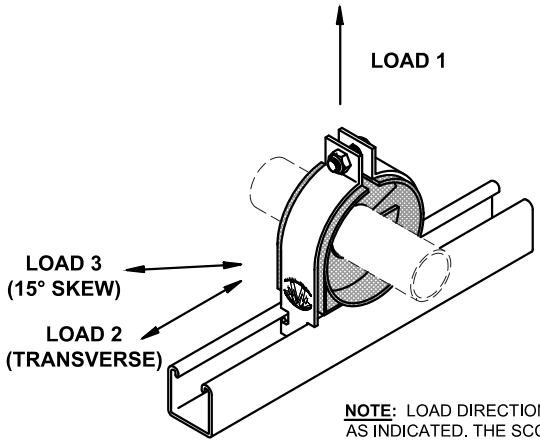

NOTE: LOAD DIRECTIONS ARE LIMITED AS INDICATED. THE SCCI IS NOT RATED IN THE LONGITUDINAL (AXIAL) DIRECTION BEYOND THE 10° SKEW.

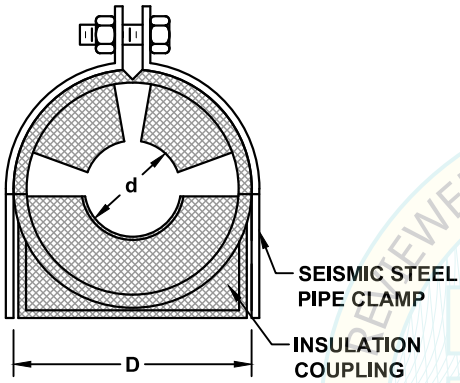

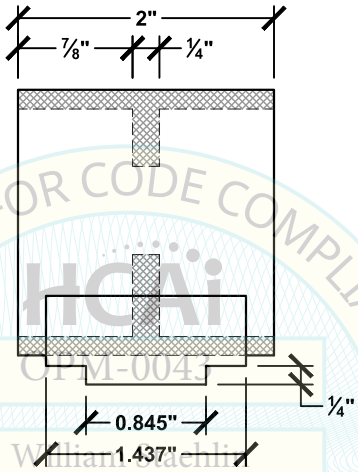

DETAIL OF INSULATION COUPLING HYDRA-ZORB KLO-SHURE

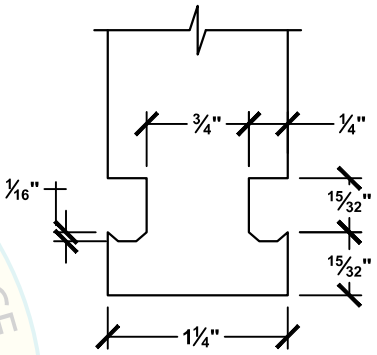

PARTIAL DETAIL OF MASON WEST MW-SCCI SEISMIC STEEL PIPE CLAMP

REVIEWED FOR CODE COMPLIANCE
HCAi
OPM-0043
BY: William Staehlin
DATE: 01/23/2023
CALIFORNIA BUILDING CODE, 2022

MATERIAL:

CLAMP: HOT ROLLED MILD STEEL, ASTM A1011SS GR 33
INSULATION COUPLING: THERMOPLASTIC TOD-247 MSDS NO. B26057
BOLT: ASTM A307, GRADE A

NOTE: MW-SCCI SEISMIC STEEL PIPE CLAMPS ARE SPECIALLY DESIGNED FOR USE WITH THE HYDRA-ZORB KLO-SHURE INSULATION COUPLINGS.

COPPER PIPE (TYPE K OR L) WITH 1" ELASTOMERIC OR FIBERGLASS INSULATION[1]						BOLT TORQUE (FT-LB)	DESIGN LOADS (ASD)		
PART #	NOM. PIPE SIZE	d	D[2]	STRAP GA.	BOLT		LOAD 1 (LBS)	LOAD 2 (LBS)	LOAD 3 (LBS)
SCCI-813	1¼	1.375	3.57	12	5/16	11	425	135	110
SCCI-815	1½	1.625	3.82	12	⅜	20	515	200	160
SCCI-820	2	2.125	4.19	12	⅜	20	650	255	205
SCCI-825	2½	2.625	4.69	12	⅜	20	755	290	235
SCCI-830	3	3.125	5.19	12	⅜	20	845	325	260
SCCI-840	4	4.125	6.25	12	⅜	20	980	385	310

1 - SPECIFY ELASTOMERIC OR FIBERGLASS INSULATION WHEN ORDERING BY ADDING AN E FOR ELASTOMERIC OR F FOR FIBERGLASS TO THE END OF THE PART #. i.e. SCCI-808F

2 - ±0.125" DIMENSIONS FOR 1" DIA., ±0.07" DIMENSIONS FOR ALL OTHERS TO ACCOUNT FOR SMALL VARIATION IN ELASTOMERIC VERSUS FIBERGLASS INSULATION THICKNESSES.

MASON WEST
1601 E. Miraloma Ave. Placentia, CA 92870
TEL (714) 630 - 0701, www.masonwest.com

Jiefu "Jeff" Zhang, SE
California SE No. S5270

PAGE
X8.6.2

MASON WEST MW-SCCI

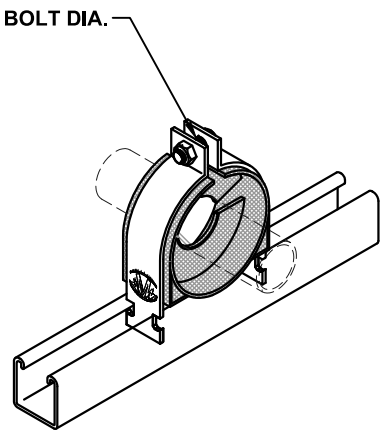

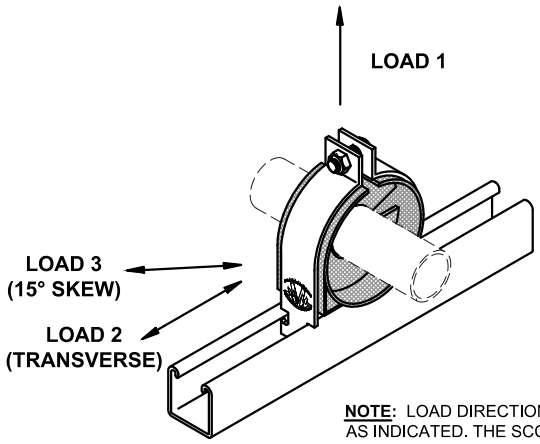

NOTE: LOAD DIRECTIONS ARE LIMITED AS INDICATED. THE SCCI IS NOT RATED IN THE LONGITUDINAL (AXIAL) DIRECTION BEYOND THE 10° SKEW.

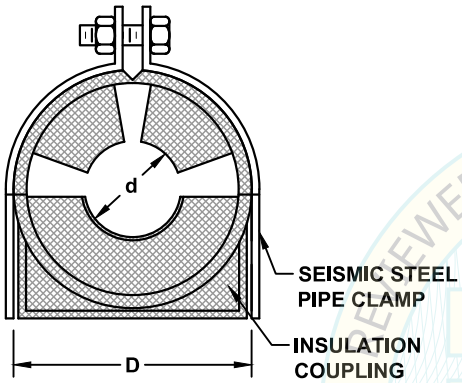

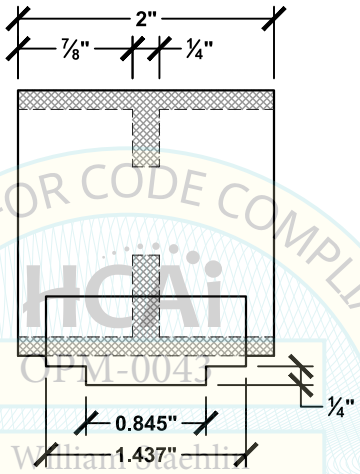

DETAIL OF INSULATION COUPLING HYDRA-ZORB KLO-SHURE

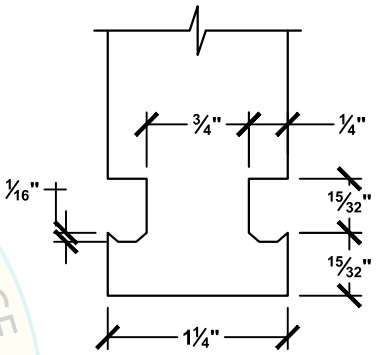

PARTIAL DETAIL OF MASON WEST MW-SCCI SEISMIC STEEL PIPE CLAMP

NOTE: MW-SCCI SEISMIC STEEL PIPE CLAMPS ARE SPECIALLY DESIGNED FOR USE WITH THE HYDRA-ZORB KLO-SHURE INSULATION COUPLINGS.

MATERIAL:

CLAMP: HOT ROLLED MILD STEEL, ASTM A1011SS GR 33
INSULATION COUPLING: THERMOPLASTIC TOD-247 MSDS NO. B26057
BOLT: ASTM A307, GRADE A

COPPER PIPE (TYPE K OR L) WITH 1½" ELASTOMERIC OR FIBERGLASS INSULATION[1]						BOLT TORQUE (FT-LB)	DESIGN LOADS (ASD)		
PART #	NOM. PIPE SIZE	d	D[2]	STRAP GA.	BOLT		LOAD 1 (LBS)	LOAD 2 (LBS)	LOAD 3 (LBS)
SCCI-913	1¼	1.375	4.5	12	5/16	11	230	270	150
SCCI-915	1½	1.625	4.75	12	⅜	20	240	215	120
SCCI-920	2	2.125	5.25	12	⅜	20	285	245	135
SCCI-925	2½	2.625	5.75	12	⅜	20	325	270	150
SCCI-930	3	3.125	6.25	12	⅜	20	345	265	145

1 - SPECIFY ELASTOMERIC OR FIBERGLASS INSULATION WHEN ORDERING BY ADDING AN E FOR ELASTOMERIC OR F FOR FIBERGLASS TO THE END OF THE PART #. i.e. SCCI-915E

2 - ±0.07" DIMENSIONS (±0.19" FOR 1½" DIA.) TO ACCOUNT FOR SMALL VARIATION IN ELASTOMERIC VERSUS FIBERGLASS INSULATION THICKNESSES.

MASON WEST
1601 E. Miraloma Ave. Placentia, CA 92870
TEL (714) 630 - 0701, www.masonwest.com

Jiefu "Jeff" Zhang, SE
California SE No. S5270

PAGE
X8.6.3

REVIEWED FOR CODE COMPLIANCE
HCAi
OPM-0043
BY: William Staehlin
DATE: 01/23/2023
CALIFORNIA BUILDING CODE, 20

Z-1011 SEISMIC SNUBBER DESIGN GENERAL NOTES

1) This OSHPD Preapproval of Manufacturer's Certification (OPM) is based on the 2013 CBC. The demand (design forces) for use with this OPM shall be based on the 2013 CBC.

2) Per ASCE 7-10, Section 13.3.1, restraints and their anchorages must be capable of restraining horizontal, F_P, and vertical, F_{PV}, seismic accelerations as follows.

$$F_P = (0.7)\frac{0.4a_P S_{DS} W_P}{R_P/I_P}\left(1+2\frac{z}{h}\right) \quad \text{(ASD)} \quad \text{(ASCE 7-10 EQ 13.3-1)}$$

is not required to be taken greater than $(0.7)1.6S_{DS}I_P W_P$ (ASD) (ASCE 7-10 EQ 13.3-2)

shall not be taken less than $(0.7)0.3S_{DS}I_P W_P$ (ASD) (ASCE 7-10 EQ 13.3-3)

$$F_{PV} = (0.7)0.2S_{DS}W_P \quad \text{(ASD)}$$

Where:

- S_{DS} = short period spectral acceleration - up to 2.5g. Values of S_{DS} indicated in the general notes of the structural drawing take precedence over those calculated per ASCE 7-10, 11.4.4.
- W_P = component or system operating weight
- I_P = component importance factor
  - = 1.5 for OSHPD 1 & 4 in accordance with 2013 CBC, Section 1616A.1.17 and for OSHPD 2 & 3, where required by ASCE 7, Section 13.1.3.
  - = 1.0 for OSHPD 2 & 3, when permitted by ASCE 7, Section 13.1.3.
- a_P = component amplification factor (Ref. ASCE 7-10, Table 13.6-1)
  - = 2.5 for vibration isolated components and systems
- R_P = component response modification factor (Ref. ASCE 7-10, Table 13.6-1)
  - = 2.5 for components and systems isolated using neoprene elements
  - = 2.0 for spring isolated components and systems
- z = height in structure of point of connection of component with respect to base (ft).
- h = average roof height of structure with respect to base (ft).

3) For systems anchored to concrete only, the anchorage to concrete overstrength factor, Ω_0, must be applied. Ω_0 is not applicable if a yielding steel element is considered in the load path. Refer to ACI 318-11 Appendix D, Section D.3.3.4.3 or ACI 318-14 Chapter 17, Section 17.2.3.4.3 for a list of qualifying conditions.

4) It is the responsibility of the Registered Design Professional (RDP) in responsible charge to:

   i. Verify that the nonstructural components or system is seismically qualified in accordance with the 2013 CBC.

   ii. Verify that the proper Mason Industries Z1011 seismic snubber is selected to meet the seismic requirements of this OPM.

   iii. Design the attachment of Mason Industries Z1011 seismic snubber to the nonstructural component.

   iv. Design the supports and attachments for Mason Industries Z1011 seismic snubber to supporting structure.

5) The Structural Engineer of Record (SEOR) shall verify that the supporting structure is adequate for the forces imposed on it by the supports, attachments and restraints installed in accordance with the pre-approval in addition to all other loads.

ACCEPTED FOR CODE COMPLIANCE
OPM 0043
DATE: 01/23/2023
CALIFORNIA BUILDING CODE 2022

MASON WEST
1601 E. Miraloma Ave. Placentia, CA 92870
TEL (714) 630 - 0701, www.masonwest.com

Jiefu "Jeff" Zhang, SE
California SE No. S5270

PAGE
X9.0

MASON IND. Z-1011 SEISMIC SNUBBER

Z-1011 Sizes 1 & 2

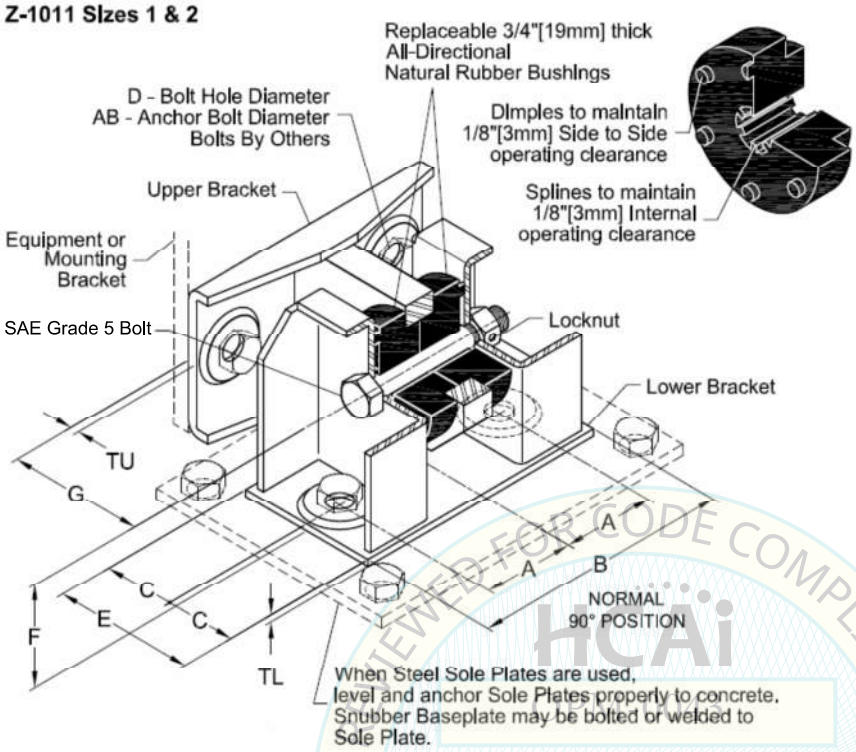

TYPE Z-1011 DIMENSIONS

		Size	A	AB	B	C	D	E	F	G	TL	TU
American Units	lbs. & inches	Z-1011-1	2 1/8	1/2	6	1 7/16	9/16	2 7/8	2 1/4	2 3/4	1/8	1/8
		Z-1011-2	2 1/8	1/2	6	1 11/16	9/16	3 3/8	2 3/8	3 1/8	5/32	3/16
Metric	KN & mm	Z-1011-1	54	13	152	37	14	73	57	70	3	3
		Z-1011-2	54	13	152	43	14	86	60	79	4	5

- All steel members ASTM A-36. Snubber Bushings are 70 Durometer Bridge-Bearing Natural Rubber compound.
- Refer to page X9.0.3 for Snubber load ratings and stiffness data
- Refer to page X9.0.4 for Snubber installation instructions

REVIEWED FOR CODE COMPLIANCE
HCAi
BY: William Staehlin
DATE: 01/23/2023
OSHPD PREAPPROVAL
CALIFORNIA BUILDING CODE 2022

MASON WEST
1601 E. Miraloma Ave. Placentia, CA 92870
TEL (714) 630 - 0701, www.masonwest.com

Jiefu "Jeff" Zhang, SE
California SE No. S5270

MASON IND. Z-1011 SEISMIC SNUBBER

Z-1011 Sizes 3, 4 & 5

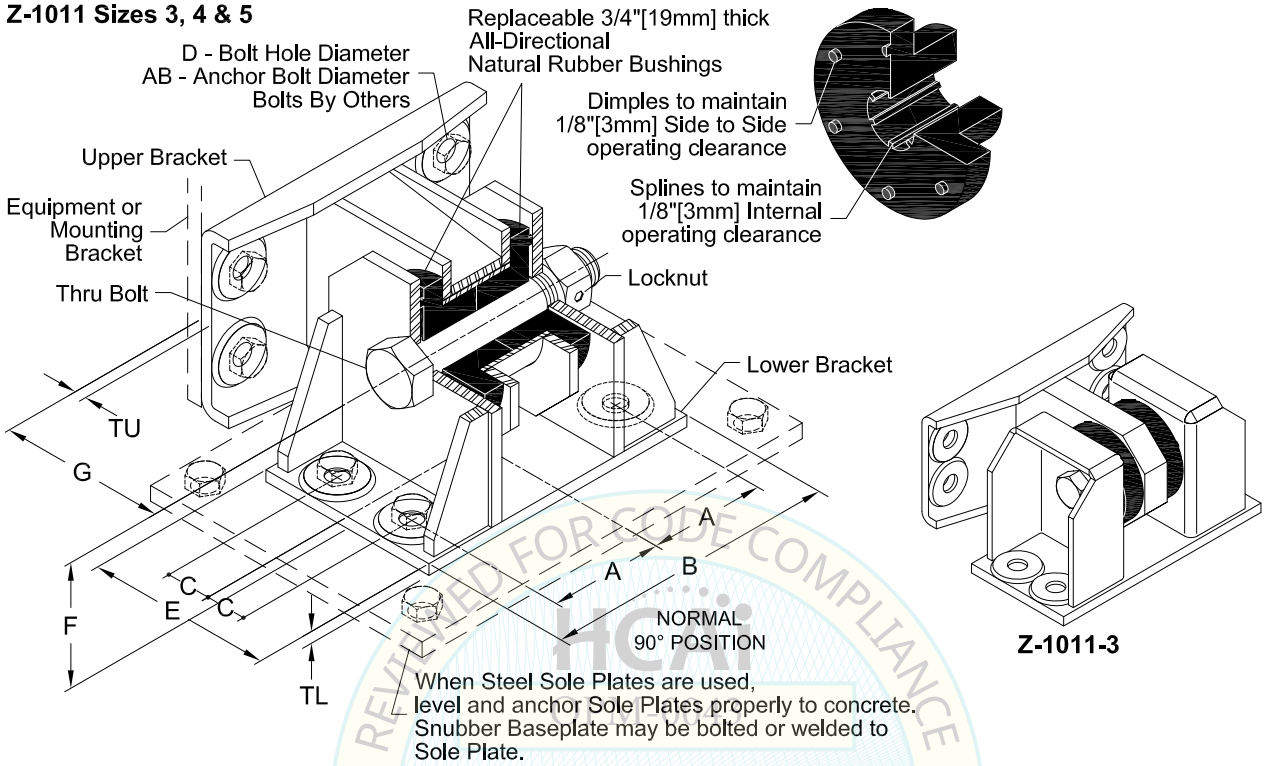

Z-1011-3

REVIEWED FOR CODE COMPLIANCE
HCAi
BY: William Staehlin
DATE: 01/23/2023
CALIFORNIA BUILDING CODE 2022

TYPE Z-1011 DIMENSIONS

		Size	A	AB	B	C	D	E	F	G	TL	TU
American Units	lbs. & inches	Z-1011-3	3 1/8	1/2	7 3/4	3/4	9/16	3 5/8	2 5/8	3 3/4	5/16	1/4
		Z-1011-4	3 1/2	5/8	9	1 1/4	11/16	5 1/2	3 3/4	5	3/8	5/16
		Z-1011-5	3 3/4	5/8	9 1/2	1 3/8	11/16	6	4	5 3/8	3/8	3/8
Metric	KN & mm	Z-1011-3	79	13	197	19	14	92	67	95	8	6
		Z-1011-4	89	16	229	32	17	140	95	127	10	8
		Z-1011-5	95	16	241	35	17	152	102	137	10	10

- All steel members ASTM A-36. Snubber Bushings are 70 Durometer Bridge-Bearing Natural Rubber compound.
- Refer to page X9.0.3 for Snubber load ratings and stiffness data
- Refer to page X9.0.4 for Snubber installation instructions

MASON WEST
1601 E. Miraloma Ave. Placentia, CA 92870
TEL (714) 630 - 0701, www.masonwest.com

Jiefu "Jeff" Zhang, SE
California SE No. S5270

PAGE
X9.0.2

MASON IND. Z-1011 SEISMIC SNUBBER
MAXIMUM ALLOWABLE LOADS & STIFFNESS DATA

Z-1011 Size	***LRFD*** *- Allowable Design Loads (lbs)* [1]		***ASD*** *- Allowable Design Loads (lbs)* [1]		*Avg. K1 Stiffness (lbs/in)*	*Avg. K3 Stiffness (lbs/in)*	*Avg. K1-K3 Transition Load (lbs)*	*Avg. K1-K3 Transition Displacement (in)*
Z-1011-1	P_{VA}	2144	P_{VA}	1429	1379	4196	690	0.50
	P_{THA}	3139	P_{THA}	2092	1708	8123	854	0.50
	P_{LHA}	4047	P_{LHA}	2698	2958	5650	740	0.25
Z-1011-2	P_{VA}	5274	P_{VA}	3516	1192	12357	596	0.50
	P_{THA}	6420	P_{THA}	4280	1042	14625	521	0.50
	P_{LHA}	6523	P_{LHA}	4348	3783	9781	946	0.25
Z-1011-3	P_{VA}	6806	P_{VA}	4537	1350	16207	675	0.50
	P_{THA}	10480	P_{THA}	6986	1300	25367	650	0.50
	P_{LHA}	10082	P_{LHA}	6721	3650	15888	913	0.25
Z-1011-4	P_{VA}	10406	P_{VA}	6937	3967	20325	1984	0.50
	P_{THA}	15267	P_{THA}	10178	3733	33901	1867	0.50
	P_{LHA}	22282	P_{LHA}	14854	6533	33294	1633	0.25
Z-1011-5	P_{VA}	13971	P_{VA}	9314	5642	24365	2821	0.50
	P_{THA}	21135	P_{THA}	14090	6767	36574	3384	0.50
	P_{LHA}	27838	P_{LHA}	18559	13533	37231	3383	0.25

1 - The combined vertical and horizontal loads on each snubber must satisfy the following condition:

$(P_V/P_{VA}) + (P_{TH}/P_{THA}) + (P_{LH}/P_{LHA}) < 1.00$

P_V, P_{TH}, and P_{LH} are calculated vertical, transverse horizontal, and longitudinal horizontal load

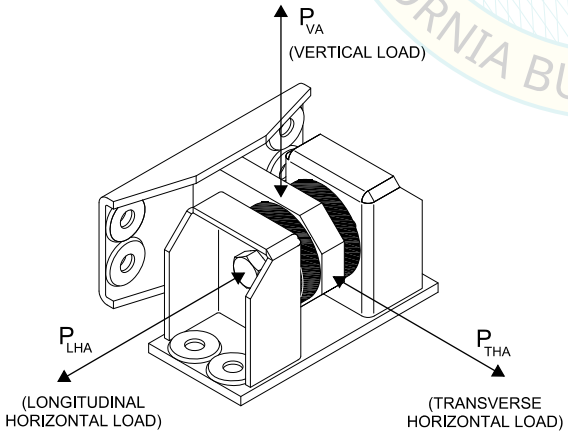

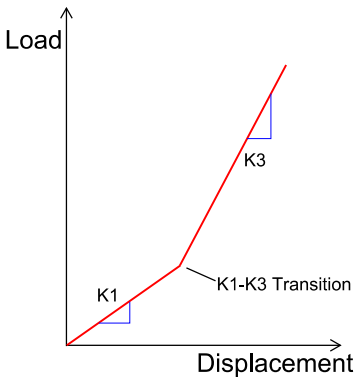

REVIEWED FOR CODE COMPLIANCE
ICA
OPM-0043
BY: William Staehlin
DATE: 01/23/2023
CALIFORNIA BUILDING CODE, 2022

MASON WEST
1601 E. Miraloma Ave. Placentia, CA 92870
TEL (714) 630 - 0701, www.masonwest.com

Jiefu "Jeff" Zhang, SE
California SE No. S5270

PAGE
X9.0.3

Z-1011 SEISMIC SNUBBER INSTALLATION INSTRUCTIONS

1) Snubbers are inactive during normal operation and clearance must be maintained.

2) If Snubbers are installed on equipment or system with flexible connections that move and remain in a different position during operation, final positioning and adjustment of Snubbers must be made with equipment in operation.

3) Use one piece, full size shim (1/4" maximum thickness) at Upper or Lower Brackets of the Snubbers as required so that no pressure from the equipment dead and live load will be applied on the Rubber Bushings.

4) Use the Upper and Lower Bracket bolt holes to layout then drill attachment holes on equipment or frame and on supporting structure if bolting attachment is preferred.

5) Bolt or weld the Snubber onto the equipment or frame and to the supporting structure. Follow design example provided in this section by Mason Industries.

6) A steel Sole Plate may be bolted or welded to Snubber Baseplate when anchoring into concrete. Consult the Registered Design Professional for design of Sole Plate.

7) Snubbers are to be used in conjunction with spring isolators without restraints. Snubbers shall not be used to support gravity loads.

REVIEWED FOR CODE COMPLIANCE
HCAi
OPM-0043
BY: William Staehlin
DATE: 01/23/2023
CALIFORNIA BUILDING CODE, 2022

MASON WEST
1601 E. Miraloma Ave. Placentia, CA 92870
TEL (714) 630 - 0701, www.masonwest.com

Jiefu "Jeff" Zhang, SE
California SE No. S5270

PAGE
X9.0.4

Z-1011 SNUBBER DESIGN PROCEDURE EXAMPLE

Example illustration: spring isolated pump with (4) Mason Z-1011-3 snubbers, anchored to structural steel (provided by SEOR).

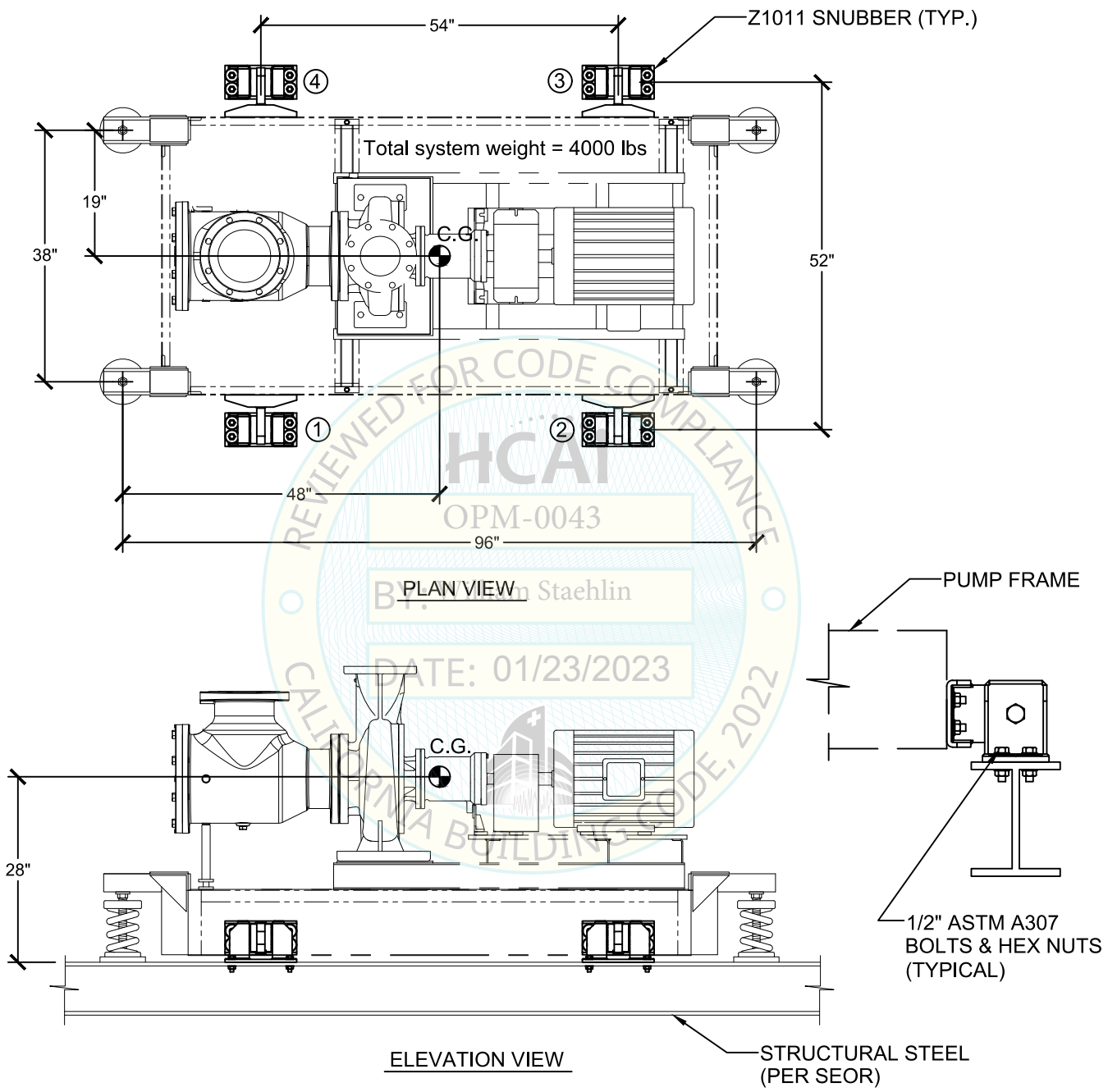

REVIEWED FOR CODE COMPLIANCE
HCAI
OPM-0043
BY: William Staehlin
DATE: 01/23/2023
CALIFORNIA BUILDING CODE, 2022

FIGURE 1 - LAYOUT OF SEISMIC SNUBBERS

MASON WEST
1601 E. Miraloma Ave. Placentia, CA 92870
TEL (714) 630 - 0701, www.masonwest.com

Jiefu "Jeff" Zhang, SE
California SE No. S5270

PAGE
X9.0.5

Z-1011 SNUBBER DESIGN PROCEDURE EXAMPLE (CONTINUED)

Example:

A 4000-lbs spring isolated pump is located on the 1st floor of a 4-story OSHPD 1 building, on a steel platform (by SEOR), 5 feet above grade level. The elevation of each floor is 15 feet.
The component will be installed with (4) Mason Z-1011-3 snubbers as shown in Figure 1.
The short period spectral acceleration, S_{DS}, listed on the contract structural drawings, is 1.02.

Note: Since the supports and attachments for the Z-1011 snubber will be to steel, the concrete overstrength factor, Ω_0, will not be used in this example.

Step 1. Determine Seismic Forces

Seismic design parameters:

W_P = 4000# S_{DS} = 1.02 I_P = 1.5. a_P = 2.5 R_P = 2.0 z = 5ft h = 60ft

Therefore,

$$F_P = (0.7)\frac{0.4(2.5)(1.02)(4000\#)}{(2.0)/(1.5)}(1+2\frac{5}{60}) = 2500 \text{ lbs} \leftarrow \text{(Governs)}$$

$$F_{P(min)} = (0.7)(0.3)(1.02)(1.5)(4000\#) = 1285 \text{ lbs}$$

$$F_{P(max)} = (0.7)(1.6)(1.02)(1.5)(4000\#) = 6854 \text{ lbs}$$

$$F_{PV} = (0.7)(0.2)(1.02)(4000\#) = 571 \text{ lbs}$$

Step 2. Determine Reaction Loads on Each Z-1011 Snubber

Component overturning calculations based on seismic load applied at a critical angle, ~~θ~~.

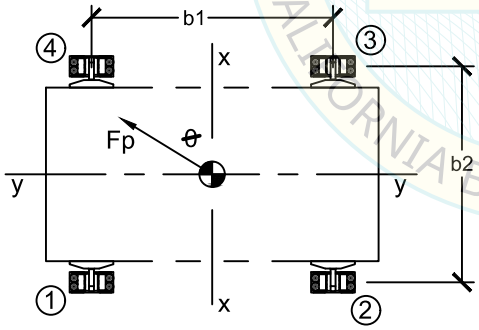

b1 = 54" = distance between snubbers along length
b2 = 52" = distance between snubbers along width
N = 4 = total number of snubbers
h = 28" = C.G. height

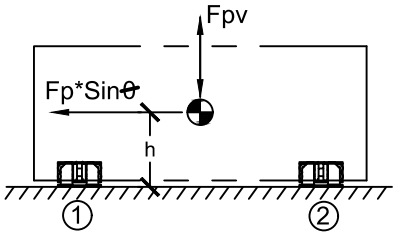

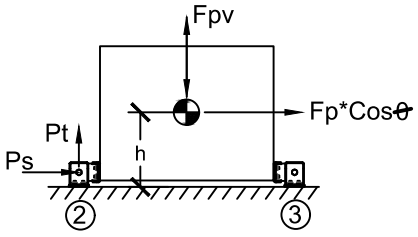

REVIEWED FOR CODE COMPLIANCE
HCAi
OPM-0043
BY: William Staehlin
DATE: 01/23/2023
CALIFORNIA BUILDING CODE 2022

MASON WEST
1601 E. Miraloma Ave. Placentia, CA 92870
TEL (714) 630 - 0701, www.masonwest.com

Jiefu "Jeff" Zhang, SE
California SE No. S5270

Z-1011 SNUBBER DESIGN PROCEDURE EXAMPLE (CONTINUED)

$$\text{Tan}\,\theta = \frac{Iyy * b1}{Ixx * b2} = 0.96 \qquad \theta = \text{Tan}^{-1}\left[\frac{Iyy * b1}{Ixx * b2}\right] = 43.9° = 0.77\text{rad}$$

Where $Ixx = \frac{N*(N+2)}{12*(N-2)} * (b1)^2 = 2916\ in^2$ and $Iyy = \frac{N}{4} * (b2)^2 = 2704\ in^2$

Maximum net uplift load on snubber location 2:

$$P_V = \frac{-Fpv}{N} - \frac{Fp * \text{Cos}\,\theta * h}{Iyy} * \left[\frac{b2}{2}\right] - \frac{Fp * \text{Sin}\,\theta * h}{Ixx} * \left[\frac{b1}{2}\right] = -1077\ \text{lbs}$$ (negative indicate uplift)

Maximum net compressive load on snubber location 4:

$$P_C = \frac{Fpv}{N} + \frac{Fp * \text{Cos}\,\theta * h}{Iyy} * \left[\frac{b2}{2}\right] + \frac{Fp * \text{Sin}\,\theta * h}{Ixx} * \left[\frac{b1}{2}\right] = 1077\ \text{lbs}$$

Maximum shear load per snubber:

$$P_H = \frac{Fp}{N} = 625\ \text{lbs}$$

Resolving into transverse and longitudinal components,

$P_{TH} = P_H * \text{Cos}\,\theta = 450$ lbs

$P_{LH} = P_H * \text{Sin}\,\theta = 433$ lbs

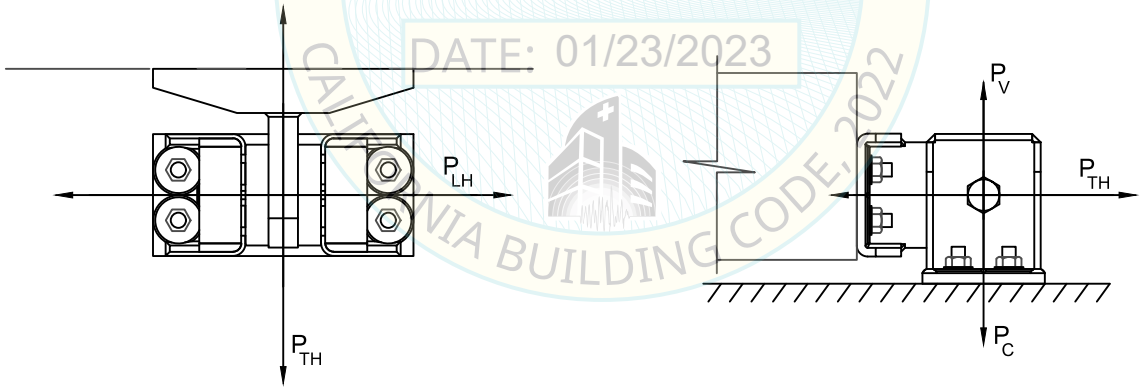

REVIEWED FOR CODE COMPLIANCE
HCAi
OPM-0043
BY: William Staehlin
DATE: 01/23/2023
CALIFORNIA BUILDING CODE 2022

Combining the loads on the snubber for the interaction check:

$$\left[\frac{P_V}{P_{VA}}\right] + \left[\frac{P_{TH}}{P_{THA}}\right] + \left[\frac{P_{LH}}{P_{LHA}}\right] = \left[\frac{1077}{4537}\right] + \left[\frac{450}{6986}\right] + \left[\frac{433}{6721}\right] = 0.37 \leq 1.00$$, Z1011-3 snubbers are adequate

MASON WEST
1601 E. Miraloma Ave. Placentia, CA 92870
TEL (714) 630 - 0701, www.masonwest.com

Jiefu "Jeff" Zhang, SE
California SE No. S5270

Z-1011 SNUBBER DESIGN PROCEDURE EXAMPLE (CONTINUED)

Step 3. Supports and Attachments Design for Z-1011 Snubber

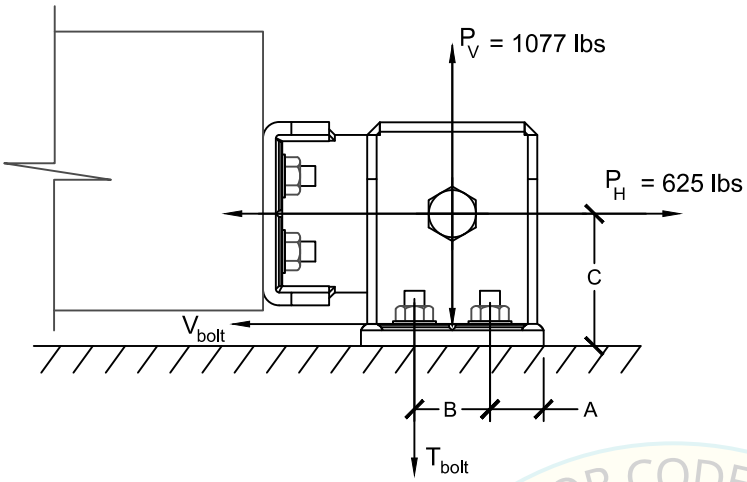

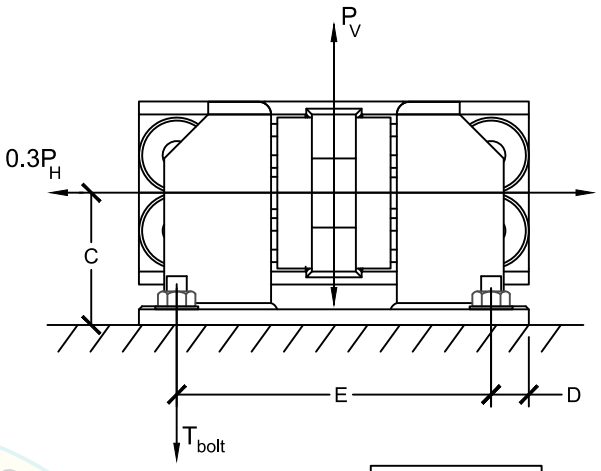

A = 1.0625"
B = 1.5"
C = 2.625"
D = 0.75"
E = 6.25"

Max. tension per bolt (including orthogonal loading effect)

$$T_{bolt} = \frac{P_H * C}{2B} + \frac{0.3P_H * C}{2E} + \frac{P_V}{4} = 856 \text{ lbs}$$

Max. shear per bolt

$$V_{bolt} = \frac{P_H}{4} = 156 \text{ lbs}$$

Steel bolt connection design per AISC, 14th Edition, Sections J3.6 & J3.7 (ASD):

For 1/2" A307 bolt,

$A_t = 0.142 \text{ in}^2$ $A_k = 0.136 \text{ in}^2$ $A_b = 0.196 \text{ in}^2$

$F_{nt} = 45$ ksi $F_{nv} = 24$ ksi

$$f_t = \frac{T_{bolt}}{A_t} = 6028 \text{ psi} \qquad f_v = \frac{V_{bolt}}{A_k} = 1148 \text{ psi}$$

$$T_{allow} = \frac{R_n}{\Omega} = \frac{F'_{nt} * A_b}{2.0} = 4418 \text{ lbs}$$

Where, $F'_{nt} = 1.3 * F_{nt} - \frac{\Omega * F_{nt}}{F_{nv}} * f_v \leq F_{nt}$

$$V_{allow} = \frac{R_n}{\Omega} = \frac{F_{nv} * A_b}{2.0} = 2356 \text{ lbs}$$

$\left[\frac{T_{bolt}}{T_{allow}}\right] = 0.19 < 1.00$ And $\left[\frac{V_{bolt}}{V_{allow}}\right] = 0.07 < 1.00$ 1/2" A307 bolts are adequate

REVIEWED FOR CODE COMPLIANCE
HCAi
OPM-0043
BY: William Staehlin
DATE: 01/23/2023
CALIFORNIA BUILDING CODE, 2022

MASON WEST
1601 E. Miraloma Ave. Placentia, CA 92870
TEL (714) 630 - 0701, www.masonwest.com

Jiefu "Jeff" Zhang, SE
California SE No. S5270

Z-1011 SNUBBER DESIGN PROCEDURE EXAMPLE (CONTINUED)

Check steel bolts at Snubber attachment to equipment base:

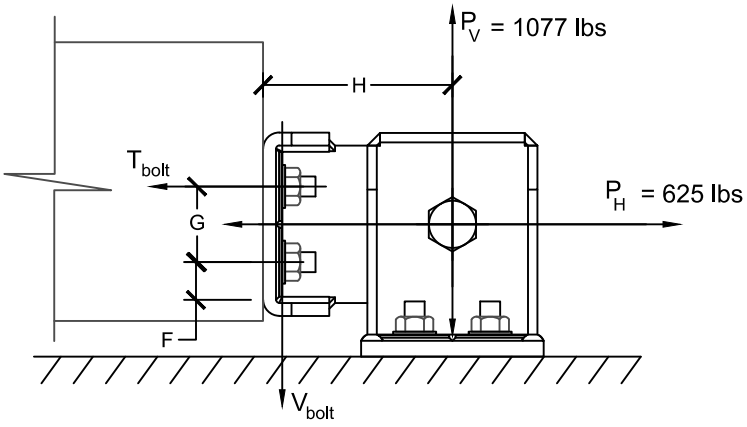

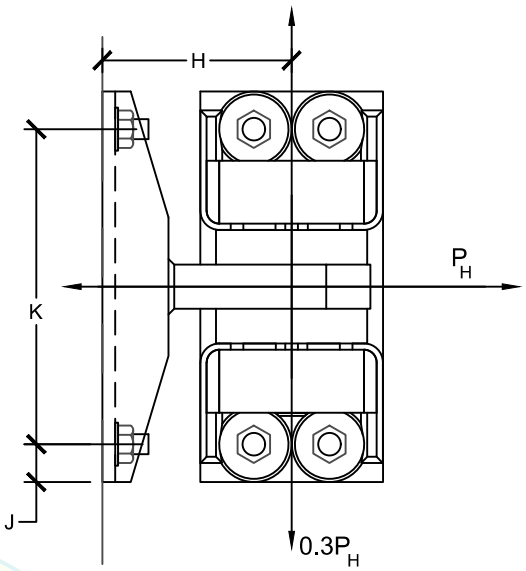

Max. tension per bolt (including orthogonal loading effect)

$$T_{bolt} = \frac{P_V * H}{2G} + \frac{0.3P_H * H}{2K} + \frac{P_H}{4} = 1559 \text{ lbs}$$

F = 0.75"
G = 1.5"
H = 3.75"
K = 6.25"
J = 0.75"

Max. shear per bolt

$$V_{bolt} = \frac{P_V}{4} = 269 \text{ lbs}$$

Steel bolt connection design per AISC, 14th Edition, Sections J3.6 & J3.7 (ASD):

For 1/2" A307 bolt,

$A_t = 0.142 \text{ in}^2$ $A_k = 0.136 \text{ in}^2$ $A_b = 0.196 \text{ in}^2$

$F_{nt} = 45$ ksi $F_{nv} = 24$ ksi

$$f_t = \frac{T_{bolt}}{A_t} = 10979 \text{ psi} \qquad f_v = \frac{V_{bolt}}{A_k} = 1148 \text{ psi}$$

$$T_{allow} = \frac{R_n}{\Omega} = \frac{F'_{nt} * A_b}{2.0} = 4418 \text{ lbs}$$

Where, $F'_{nt} = 1.3 * F_{nt} - \frac{\Omega * F_{nt}}{F_{nv}} * f_v \leq F_{nt}$

$$V_{allow} = \frac{R_n}{\Omega} = \frac{F_{nv} * A_b}{2.0} = 2356 \text{ lbs}$$

$\left[\frac{T_{bolt}}{T_{allow}}\right] = 0.35 < 1.00$ And $\left[\frac{V_{bolt}}{V_{allow}}\right] = 0.11 < 1.00$ 1/2" A307 bolts are adequate

REVIEWED FOR CODE COMPLIANCE
HCAi
OPM-0043
BY: William Staehlin
DATE: 01/23/2023
CALIFORNIA BUILDING CODE, 2022

MASON WEST
1601 E. Miraloma Ave. Placentia, CA 92870
TEL (714) 630 - 0701, www.masonwest.com

Jiefu "Jeff" Zhang, SE
California SE No. S5270

APPENDIX

MASON WEST
1601 E. Miraloma Ave. Placentia, CA 92870
TEL (714) 630 - 0701, www.masonwest.com

Jiefu "Jeff" Zhang, SE
California SE No. S5270

PAGE
APP0.0

DUCT WEIGHTS

GALVANIZED RECTANGULAR DUCT

24 GAGE - SIZES 3" x 3" TO 28" x 28"

(LBS/FT)

SIZE (IN)	3	4	5	6	7	8	9	10	12	14	16	18	20	22	24	26	28
3	1.3	1.5	1.7	2.0	2.2	2.4	2.6	2.8	3.3	3.7	4.1	4.6	5.0	5.4	5.9	6.3	6.7
4		1.7	2.0	2.2	2.4	2.6	2.8	3.0	3.5	3.9	4.3	4.8	5.2	5.6	6.1	6.5	6.9
5			2.2	2.4	2.6	2.8	3.0	3.3	3.7	4.1	4.6	5.0	5.4	5.9	6.3	6.7	7.2
6				2.6	2.8	3.0	3.3	3.5	3.9	4.3	4.8	5.2	5.6	6.1	6.5	6.9	7.4
7					3.0	3.3	3.5	3.7	4.1	4.6	5.0	5.4	5.9	6.3	6.7	7.2	7.6
8						3.5	3.7	3.9	4.3	4.8	5.2	5.6	6.1	6.5	6.9	7.4	7.8
9							3.9	4.1	4.6	5.0	5.4	5.9	6.3	6.7	7.2	7.6	8.0
10								4.3	4.8	5.2	5.6	6.1	6.5	6.9	7.4	7.8	8.2
12									5.2	5.6	6.1	6.5	6.9	7.4	7.8	8.2	8.7
14										6.1	6.5	6.9	7.4	7.8	8.2	8.7	9.1
16											6.9	7.4	7.8	8.2	8.7	9.1	9.5
18												7.8	8.2	8.7	9.1	9.5	10.0
20													8.7	9.1	9.5	10.0	10.4
22														9.5	10.0	10.4	10.9
24															10.4	10.9	11.3
26																11.3	11.7
28																	12.2

NOTES:

WEIGHTS INCLUDE ALLOWANCE FOR LAPS AND SEAMS.

REFER TO PAGE APP1.6 FOR DIFFERENT GAGE WEIGHT CONVERSIONS.

MASON WEST
1601 E. Miraloma Ave. Placentia, CA 92870
TEL (714) 630 - 0701, www.masonwest.com

Jiefu "Jeff" Zhang, SE
California SE No. S5270

DUCT WEIGHTS

GALVANIZED RECTANGULAR DUCT

22 GAGE - SIZES 30" x 3" TO 40" x 40"

(LBS/FT)

SIZE (IN)	30	32	34	36	38	40
3	8.6	9.1	9.7	10.2	10.7	11.2
4	8.9	9.4	9.9	10.4	11.0	11.5
5	9.1	9.7	10.2	10.7	11.2	11.7
6	9.4	9.9	10.4	11.0	11.5	12.0
7	9.7	10.2	10.7	11.2	11.7	12.3
8	9.9	10.4	11.0	11.5	12.0	12.5
9	10.2	10.7	11.2	11.7	12.3	12.8
10	10.4	11.0	11.5	12.0	12.5	13.1
12	11.0	11.5	12.0	12.5	13.1	13.6
14	11.5	12.0	12.5	13.1	13.6	14.1
16	12.0	12.5	13.1	13.6	14.1	14.6
18	12.5	13.1	13.6	14.1	14.6	15.1
20	13.1	13.6	14.1	14.6	15.1	15.7
22	13.6	14.1	14.6	15.1	15.7	16.2
24	14.1	14.6	15.1	15.7	16.2	16.7
26	14.6	15.1	15.7	16.2	16.7	17.2
28	15.1	15.7	16.2	16.7	17.2	17.7
30	15.7	16.2	16.7	17.2	17.7	18.3
32		16.7	17.2	17.7	18.3	18.8
34			17.7	18.3	18.8	19.3
36				18.8	19.3	19.8
38					19.8	20.4
40						20.9

NOTES:

WEIGHTS INCLUDE ALLOWANCE FOR LAPS AND SEAMS.

REFER TO PAGE APP1.6 FOR DIFFERENT GAGE WEIGHT CONVERSIONS.

MASON WEST
1601 E. Miraloma Ave. Placentia, CA 92870
TEL (714) 630 - 0701, www.masonwest.com

Jiefu "Jeff" Zhang, SE
California SE No. S5270

PAGE
APP1.1

DUCT WEIGHTS

GALVANIZED RECTANGULAR DUCT

20 GAGE - SIZES 42" x 3" TO 58" x 58"

(LBS/FT)

SIZE (IN)	42	44	46	48	50	52	54	56	58
3	13.4	14.0	14.6	15.1	15.7	16.3	16.9	17.5	18.1
4	13.7	14.3	14.9	15.4	16.0	16.6	17.2	17.8	18.4
5	14.0	14.6	15.1	15.7	16.3	16.9	17.5	18.1	18.7
6	14.3	14.9	15.4	16.0	16.6	17.2	17.8	18.4	19.0
7	14.6	15.1	15.7	16.3	16.9	17.5	18.1	18.7	19.3
8	14.9	15.4	16.0	16.6	17.2	17.8	18.4	19.0	19.6
9	15.1	15.7	16.3	16.9	17.5	18.1	18.7	19.3	19.9
10	15.4	16.0	16.6	17.2	17.8	18.4	19.0	19.6	20.2
12	16.0	16.6	17.2	17.8	18.4	19.0	19.6	20.2	20.8
14	16.6	17.2	17.8	18.4	19.0	19.6	20.2	20.8	21.4
16	17.2	17.8	18.4	19.0	19.6	20.2	20.8	21.4	22.0
18	17.8	18.4	19.0	19.6	20.2	20.8	21.4	22.0	22.6
20	18.4	19.0	19.6	20.2	20.8	21.4	22.0	22.6	23.2
22	19.0	19.6	20.2	20.8	21.4	22.0	22.6	23.2	23.8
24	19.6	20.2	20.8	21.4	22.0	22.6	23.2	23.8	24.4
26	20.2	20.8	21.4	22.0	22.6	23.2	23.8	24.4	24.9
28	20.8	21.4	22.0	22.6	23.2	23.8	24.4	24.9	25.5
30	21.4	22.0	22.6	23.2	23.8	24.4	24.9	25.5	26.1
32	22.0	22.6	23.2	23.8	24.4	24.9	25.5	26.1	26.7
34	22.6	23.2	23.8	24.4	24.9	25.5	26.1	26.7	27.3
36	23.2	23.8	24.4	24.9	25.5	26.1	26.7	27.3	27.9
38	23.8	24.4	24.9	25.5	26.1	26.7	27.3	27.9	28.5
40	24.4	24.9	25.5	26.1	26.7	27.3	27.9	28.5	29.1
42	24.9	25.5	26.1	26.7	27.3	27.9	28.5	29.1	29.7
44		26.1	26.7	27.3	27.9	28.5	29.1	29.7	30.3
46			27.3	27.9	28.5	29.1	29.7	30.3	30.9
48				28.5	29.1	29.7	30.3	30.9	31.5
50					29.7	30.3	30.9	31.5	32.1
52						30.9	31.5	32.1	32.7
54							32.1	32.7	33.3
56								33.3	33.9
58									34.5

NOTES:

WEIGHTS INCLUDE ALLOWANCE FOR LAPS AND SEAMS.

REFER TO PAGE APP1.6 FOR DIFFERENT GAGE WEIGHT CONVERSIONS.

MASON WEST
1601 E. Miraloma Ave. Placentia, CA 92870
TEL (714) 630 - 0701, www.masonwest.com

Jiefu "Jeff" Zhang, SE
California SE No. S5270

DUCT WEIGHTS

GALVANIZED RECTANGULAR DUCT

18 GAGE - SIZES 60" x 6" TO 98" x 98"

(LBS/FT)

SIZE (IN)	60	62	64	66	68	70	72	74	76	78	80	82	84	86	88	90	92	94	96	98
6	25.4	26.2	27.0	27.7	28.5	29.3	30.0	30.8	31.6	32.3	33.1	33.9	34.7	35.4	36.2	37.0	37.7	38.5	39.3	40.0
8	26.2	27.0	27.7	28.5	29.3	30.0	30.8	31.6	32.3	33.1	33.9	34.7	35.4	36.2	37.0	37.7	38.5	39.3	40.0	40.8
10	27.0	27.7	28.5	29.3	30.0	30.8	31.6	32.3	33.1	33.9	34.7	35.4	36.2	37.0	37.7	38.5	39.3	40.0	40.8	41.6
12	27.7	28.5	29.3	30.0	30.8	31.6	32.3	33.1	33.9	34.7	35.4	36.2	37.0	37.7	38.5	39.3	40.0	40.8	41.6	42.4
14	28.5	29.3	30.0	30.8	31.6	32.3	33.1	33.9	34.7	35.4	36.2	37.0	37.7	38.5	39.3	40.0	40.8	41.6	42.4	43.1
16	29.3	30.0	30.8	31.6	32.3	33.1	33.9	34.7	35.4	36.2	37.0	37.7	38.5	39.3	40.0	40.8	41.6	42.4	43.1	43.9
18	30.0	30.8	31.6	32.3	33.1	33.9	34.7	35.4	36.2	37.0	37.7	38.5	39.3	40.0	40.8	41.6	42.4	43.1	43.9	44.7
20	30.8	31.6	32.3	33.1	33.9	34.7	35.4	36.2	37.0	37.7	38.5	39.3	40.0	40.8	41.6	42.4	43.1	43.9	44.7	45.4
22	31.6	32.3	33.1	33.9	34.7	35.4	36.2	37.0	37.7	38.5	39.3	40.0	40.8	41.6	42.4	43.1	43.9	44.7	45.4	46.2
24	32.3	33.1	33.9	34.7	35.4	36.2	37.0	37.7	38.5	39.3	40.0	40.8	41.6	42.4	43.1	43.9	44.7	45.4	46.2	47.0
26	33.1	33.9	34.7	35.4	36.2	37.0	37.7	38.5	39.3	40.0	40.8	41.6	42.4	43.1	43.9	44.7	45.4	46.2	47.0	47.7
28	33.9	34.7	35.4	36.2	37.0	37.7	38.5	39.3	40.0	40.8	41.6	42.4	43.1	43.9	44.7	45.4	46.2	47.0	47.7	48.5
30	34.7	35.4	36.2	37.0	37.7	38.5	39.3	40.0	40.8	41.6	42.4	43.1	43.9	44.7	45.4	46.2	47.0	47.7	48.5	49.3
32	35.4	36.2	37.0	37.7	38.5	39.3	40.0	40.8	41.6	42.4	43.1	43.9	44.7	45.4	46.2	47.0	47.7	48.5	49.3	50.1
34	36.2	37.0	37.7	38.5	39.3	40.0	40.8	41.6	42.4	43.1	43.9	44.7	45.4	46.2	47.0	47.7	48.5	49.3	50.1	50.8
36	37.0	37.7	38.5	39.3	40.0	40.8	41.6	42.4	43.1	43.9	44.7	45.4	46.2	47.0	47.7	48.5	49.3	50.1	50.8	51.6
38	37.7	38.5	39.3	40.0	40.8	41.6	42.4	43.1	43.9	44.7	45.4	46.2	47.0	47.7	48.5	49.3	50.1	50.8	51.6	52.4
40	38.5	39.3	40.0	40.8	41.6	42.4	43.1	43.9	44.7	45.4	46.2	47.0	47.7	48.5	49.3	50.1	50.8	51.6	52.4	53.1
42	39.3	40.0	40.8	41.6	42.4	43.1	43.9	44.7	45.4	46.2	47.0	47.7	48.5	49.3	50.1	50.8	51.6	52.4	53.1	53.9
44	40.0	40.8	41.6	42.4	43.1	43.9	44.7	45.4	46.2	47.0	47.7	48.5	49.3	50.1	50.8	51.6	52.4	53.1	53.9	54.7
46	40.8	41.6	42.4	43.1	43.9	44.7	45.4	46.2	47.0	47.7	48.5	49.3	50.1	50.8	51.6	52.4	53.1	53.9	54.7	55.4
48	41.6	42.4	43.1	43.9	44.7	45.4	46.2	47.0	47.7	48.5	49.3	50.1	50.8	51.6	52.4	53.1	53.9	54.7	55.4	56.2
50	42.4	43.1	43.9	44.7	45.4	46.2	47.0	47.7	48.5	49.3	50.1	50.8	51.6	52.4	53.1	53.9	54.7	55.4	56.2	57.0
52	43.1	43.9	44.7	45.4	46.2	47.0	47.7	48.5	49.3	50.1	50.8	51.6	52.4	53.1	53.9	54.7	55.4	56.2	57.0	57.8
54	43.9	44.7	45.4	46.2	47.0	47.7	48.5	49.3	50.1	50.8	51.6	52.4	53.1	53.9	54.7	55.4	56.2	57.0	57.8	58.5
56	44.7	45.4	46.2	47.0	47.7	48.5	49.3	50.1	50.8	51.6	52.4	53.1	53.9	54.7	55.4	56.2	57.0	57.8	58.5	59.3
58	45.4	46.2	47.0	47.7	48.5	49.3	50.1	50.8	51.6	52.4	53.1	53.9	54.7	55.4	56.2	57.0	57.8	58.5	59.3	60.1
60	46.2	47.0	47.7	48.5	49.3	50.1	50.8	51.6	52.4	53.1	53.9	54.7	55.4	56.2	57.0	57.8	58.5	59.3	60.1	60.8
62		47.7	48.5	49.3	50.1	50.8	51.6	52.4	53.1	53.9	54.7	55.4	56.2	57.0	57.8	58.5	59.3	60.1	60.8	61.6
64			49.3	50.1	50.8	51.6	52.4	53.1	53.9	54.7	55.4	56.2	57.0	57.8	58.5	59.3	60.1	60.8	61.6	62.4
66				50.8	51.6	52.4	53.1	53.9	54.7	55.4	56.2	57.0	57.8	58.5	59.3	60.1	60.8	61.6	62.4	63.1
68					52.4	53.1	53.9	54.7	55.4	56.2	57.0	57.8	58.5	59.3	60.1	60.8	61.6	62.4	63.1	63.9
70						53.9	54.7	55.4	56.2	57.0	57.8	58.5	59.3	60.1	60.8	61.6	62.4	63.1	63.9	64.7
72							55.4	56.2	57.0	57.8	58.5	59.3	60.1	60.8	61.6	62.4	63.1	63.9	64.7	65.5
74								57.0	57.8	58.5	59.3	60.1	60.8	61.6	62.4	63.1	63.9	64.7	65.5	66.2
76									58.5	59.3	60.1	60.8	61.6	62.4	63.1	63.9	64.7	65.5	66.2	67.0
78										60.1	60.8	61.6	62.4	63.1	63.9	64.7	65.5	66.2	67.0	67.8
80											61.6	62.4	63.1	63.9	64.7	65.5	66.2	67.0	67.8	68.5
82												63.1	63.9	64.7	65.5	66.2	67.0	67.8	68.5	69.3
84													64.7	65.5	66.2	67.0	67.8	68.5	69.3	70.1
86														66.2	67.0	67.8	68.5	69.3	70.1	70.8
88															67.8	68.5	69.3	70.1	70.8	71.6
90																69.3	70.1	70.8	71.6	72.4
92																	70.8	71.6	72.4	73.2
94																		72.4	73.2	73.9
96																			73.9	74.7
98																				75.5

NOTES:

WEIGHTS INCLUDE ALLOWANCE FOR LAPS AND SEAMS.

REFER TO PAGE APP1.6 FOR DIFFERENT GAGE WEIGHT CONVERSIONS.

MASON WEST
1601 E. Miraloma Ave. Placentia, CA 92870
TEL (714) 630 - 0701, www.masonwest.com

Jiefu "Jeff" Zhang, SE
California SE No. S5270

DUCT WEIGHTS

GALVANIZED ROUND DUCT

30 TO 24 GAGE - SIZES 3" TO 84"

(LBS/FT)

DIA. (IN)	30 GAGE		28 GAGE		26 GAGE		24 GAGE	
	SEAM GAGE		SEAM GAGE		SEAM GAGE		SEAM GAGE	
	SPIRAL	LONG.	SPIRAL	LONG.	SPIRAL	LONG.	SPIRAL	LONG.
3	0.60	0.60	0.70	0.71	0.90	0.82	1.00	1.05
4	0.80	0.77	0.90	0.92	1.20	1.06	1.30	1.60
5	0.90	0.94	1.10	1.12	1.40	1.30	1.60	1.66
6	1.10	1.11	1.40	1.32	1.70	4.54	2.00	1.96
7	1.30	1.28	1.60	1.53	1.90	1.77	2.40	2.26
8	1.50	1.46	1.90	1.73	2.10	2.01	2.60	2.57
9	1.60	1.63	2.00	1.94	2.30	2.25	3.00	2.87
10	1.90	1.80	2.20	2.14	2.50	0.25	3.30	3.17
11	2.00	1.97	2.40	2.35	2.80	2.72	3.60	3.48
12	2.20	2.14	2.60	2.55	3.00	2.96	3.80	3.78
14		2.49	3.00	2.96	3.50	3.43	4.40	4.38
16		2.83	3.40	3.37	4.00	3.91	5.10	4.99
18		3.18	3.80	3.78	4.40	4.38	5.70	5.59
20			4.20	4.19	5.00	4.86	6.40	6.20
22			4.70	4.60	5.40	5.33	7.00	6.80
24			5.20	5.01	6.00	5.80	7.80	7.41
26					6.60	6.28	8.50	8.02
28					7.00	6.75	8.90	8.62
30					7.10	7.23	9.30	9.23
32						7.70	10.10	9.83
34						8.18		10.44
36						8.65	11.50	11.05
40						9.60	12.80	12.26
44						10.55	14.40	13.47
48						11.50	15.40	14.68
50							16.00	15.28
54								16.50
56								17.10
60								18.31
72								21.95
84								25.58

NOTES:

WEIGHTS INCLUDE ALLOWANCE FOR LAPS AND SEAMS.

REFER TO PAGE APP1.6 FOR DIFFERENT GAGE WEIGHT CONVERSIONS.

MASON WEST
1601 E. Miraloma Ave. Placentia, CA 92870
TEL (714) 630 - 0701, www.masonwest.com

Jiefu "Jeff" Zhang, SE
California SE No. S5270

DUCT WEIGHTS

GALVANIZED ROUND DUCT

22 TO 16 GAGE - SIZES 3" TO 84"

(LBS/FT)

DIA. (IN)	22 GAGE		20 GAGE		18 GAGE		16 GAGE	
	SEAM GAGE		SEAM GAGE		SEAM GAGE		SEAM GAGE	
	SPIRAL	LONG.	SPIRAL	LONG.	SPIRAL	LONG.	SPIRAL	LONG.
3	1.20	1.28	1.30	1.51	2.00	1.97		2.42
4	1.50	1.65	1.80	1.94	2.60	2.53		3.12
5	2.00	2.02	2.30	2.38	3.20	3.10		3.81
6	2.40	2.39	2.60	2.81	3.70	3.66	5.00	4.51
7	2.80	2.75	3.30	3.24	4.30	4.23	4.80	5.20
8	3.20	3.12	3.70	3.68	4.80	4.79	6.70	5.90
9	3.50	3.49	4.00	4.11	5.30	5.36	7.50	6.60
10	4.00	3.86	4.70	4.54	6.00	5.92	8.30	7.29
11	4.40	4.23	5.10	4.98	6.70	6.49	9.10	7.98
12	4.70	4.60	5.20	5.41	7.20	7.05	10.00	8.68
14	5.40	5.33	6.40	6.28	8.30	8.19	11.70	10.08
16	6.20	6.07	7.30	7.15	9.40	9.32	13.40	11.47
18	6.90	6.80	8.10	8.01	10.50	10.45	15.00	12.86
20	7.80	7.54	9.00	8.88	11.70	11.58	16.70	14.25
22	8.40	8.28	9.90	9.75	12.90	12.71	18.40	15.84
24	9.50	9.01	11.00	10.83	14.40	13.84	20.00	17.04
26	10.30	9.75	12.20	11.48	15.80	14.97	21.70	18.43
28	11.00	10.49	12.90	12.35	16.50	16.10	23.40	19.82
30	11.80	11.22	13.60	13.22	17.20	17.23	25.00	21.21
32	12.60	11.96	14.60	14.09	18.90	18.36	26.70	22.60
34		12.70		14.95		19.49		24.00
36	14.20	13.43	16.66	15.82	21.50	20.62	30.00	25.38
40	15.50	14.91	18.50	17.56	23.80	22.88	33.40	28.17
44	17.40	16.38	20.50	19.29	26.70	25.15	36.70	30.96
48	18.70	17.85	22.20	21.03	29.20	27.41	40.10	33.74
50	19.50	18.59	23.30	21.89	30.00	28.54	41.70	35.13
54		20.06		23.63		30.80	45.10	37.91
56		20.79		24.50		31.93	46.70	39.31
60		22.27		26.23		34.19	50.10	42.09
72		26.69		31.44		40.98		50.44
84		31.11		36.64		47.76		58.79

NOTES:

WEIGHTS INCLUDE ALLOWANCE FOR LAPS AND SEAMS.

REFER TO PAGE APP1.6 FOR DIFFERENT GAGE WEIGHT CONVERSIONS.

MASON WEST
1601 E. Miraloma Ave. Placentia, CA 92870
TEL (714) 630 - 0701, www.masonwest.com

Jiefu "Jeff" Zhang, SE
California SE No. S5270

DUCT WEIGHTS

GALVANIZED SHEET METAL CONVERSION CHARTS

TABLE A - CONVERTING LIGHTER GAGES TO HEAVIER GAGES

GAGE	26	24	22	20	18	16
28	1.16	1.48	1.85	2.12	2.76	3.40
26		1.27	1.55	1.83	2.38	2.93
24			1.22	1.43	1.87	2.30
22				1.18	1.53	1.89
20					1.30	1.60
18						1.23

TABLE B - CONVERTING HEAVIER GAGES TO LIGHTER GAGES

GAGE	26	24	22	20	18	16
28	0.86	0.67	0.55	0.47	0.36	0.29
26		0.78	0.65	0.55	0.42	0.34
24			0.82	0.70	0.53	0.43
22				0.85	0.65	0.53
20					0.77	0.63
18						0.81

MASON WEST
1601 E. Miraloma Ave. Placentia, CA 92870
TEL (714) 630 - 0701, www.masonwest.com

Jiefu "Jeff" Zhang, SE
California SE No. S5270

PIPE WEIGHTS - COPPER

TYPE L

PIPE DIA. (IN)	INSULATION THICKNESS (IN)	WEIGHT PER FOOT (LBS)			
		PIPE	WATER	INSULATION	TOTAL
1/4	1	0.126	0.034	0.2	0.360
3/8	1	0.198	0.063	0.3	0.561
1/2	1	0.285	0.101	0.4	0.786
5/8	1	0.362	0.150	0.5	1.012
3/4	1	0.455	0.209	0.6	1.264
1	1	0.7	0.4	0.7	1.8
1 1/4	1	0.9	0.6	0.8	2.3
1 1/2	1	1.1	0.8	0.9	2.8
2	1	1.8	1.4	1.0	4.2
2 1/2	1	2.5	2.1	1.2	5.8
3	1	3.3	3.0	1.3	7.6
3 1/2	1	4.3	4.0	1.5	9.8
4	1	5.4	5.2	1.8	12.4
5	1 1/2	7.6	8.1	2.9	18.6
6	1 1/2	10.2	11.6	3.3	25.1
8	1 1/2	19.3	20.3	4.1	43.7
10	1 1/2	30.1	31.6	5.2	66.9
12	1 1/2	40.4	45.4	6.0	91.8

TYPE K

PIPE DIA. (IN)	INSULATION THICKNESS (IN)	WEIGHT PER FOOT (LBS)			
		PIPE	WATER	INSULATION	TOTAL
1/4	1	0.133	0.044	0.2	0.377
3/8	1	0.269	0.055	0.3	0.624
1/2	1	0.344	0.094	0.4	0.838
5/8	1	0.418	0.144	0.5	1.062
3/4	1	0.641	0.188	0.6	1.429
1	1	0.837	0.343	0.7	1.88
1 1/4	1	1.04	0.53	0.8	2.37
1 1/2	1	1.36	0.74	0.9	3.0
2	1	2.06	1.30	1.0	4.36
2 1/2	1	2.92	2.02	1.2	6.14
3	1	4.00	2.87	1.3	8.17
3 1/2	1	5.12	3.89	1.5	10.51
4	1	6.51	5.09	1.8	13.4
5	1 1/2	9.67	7.87	2.9	20.4
6	1 1/2	13.9	11.2	3.3	28.4
8	1 1/2	25.9	19.5	4.1	49.4
10	1 1/2	40.3	30.3	5.2	75.8
12	1 1/2	57.8	43.2	6.0	107

MASON WEST
1601 E. Miraloma Ave. Placentia, CA 92870
TEL (714) 630 - 0701, www.masonwest.com

Jiefu "Jeff" Zhang, SE
California SE No. S5270

PAGE
APP2.0

PIPE WEIGHTS - STEEL

STANDARD SCHEDULE

PIPE DIA. (IN)	PIPE SCHEDULE	INSULATION THICKNESS (IN)	WEIGHT PER FOOT (LBS)			
			PIPE	WATER	INSULATION	TOTAL
1	40	1	1.7	0.4	0.7	2.8
1 1/4	40	1	2.3	0.7	0.8	3.8
1 1/2	40	1	2.7	0.9	0.9	4.5
2	40	1	3.7	1.5	1.0	6.2
2 1/2	40	1	5.8	2.1	1.2	9.1
3	40	1	7.6	3.2	1.3	12.1
4	40	1	11.0	5.5	1.8	18.3
5	40	1 1/2	15.0	8.7	2.9	26.6
6	40	1 1/2	19.0	12.5	3.3	34.8
8	40	1 1/2	29.0	22.0	4.1	55.1
10	40	1 1/2	41.0	34.0	5.2	80.2
12	40	1 1/2	54.0	49.0	6.0	109.0
14	30	1 1/2	55.0	60.0	7.0	122.0
16	30	1 1/2	63.0	79.0	7.5	150.0
18	30	1 1/2	82.0	100.0	8.0	190.0
20	20	1 1/2	79.0	126.0	8.5	214.0
24	20	1 1/2	95.0	184.0	10.0	289.0

SCHEDULE 40

PIPE DIA. (IN)	PIPE SCHEDULE	INSULATION THICKNESS (IN)	WEIGHT PER FOOT (LBS)			
			PIPE	WATER	INSULATION	TOTAL
14	40	1 1/2	63.0	61.5	7.0	129.5
16	40	1 1/2	83.0	80.5	7.5	167.0
18	40	1 1/2	105.0	102.0	8.0	210.0
20	40	1 1/2	123.0	117.4	8.5	251.9
24	40	1 1/2	171.0	184.0	10.0	355.0

MASON WEST
1601 E. Miraloma Ave. Placentia, CA 92870
TEL (714) 630 - 0701, www.masonwest.com

Jiefu "Jeff" Zhang, SE
California SE No. S5270

PAGE
APP2.1

PIPE WEIGHTS - STEEL (CONT.)

SCHEDULE 80

PIPE DIA. (IN)	PIPE SCHEDULE	INSULATION THICKNESS (IN)	WEIGHT PER FOOT (LBS)			
			PIPE	WATER	INSULATION	TOTAL
1	80	1	2.17	0.31	0.7	3.18
1 1/4	80	1	3.00	0.55	0.8	4.35
1 1/2	80	1	3.63	0.77	0.9	5.30
2	80	1	5.02	1.28	1.0	7.30
2 1/2	80	1	7.66	1.83	1.2	10.69
3	80	1	10.25	2.86	1.3	14.41
4	80	1	14.98	4.98	1.8	21.76
5	80	1 1/2	20.78	7.88	2.9	31.56
6	80	1 1/2	28.57	11.29	3.3	43.16
8	80	1 1/2	43.39	19.80	4.1	67.29
10	80	1 1/2	64.40	31.10	5.2	100.7
12	80	1 1/2	88.60	44.00	6.0	138.6
14	80	1 1/2	107.0	51.2	7.0	165.2
16	80	1 1/2	137.0	69.7	7.5	214.2
18	80	1 1/2	171.0	88.5	8.0	267.5
20	80	1 1/2	209.0	109.4	8.5	326.9
24	80	1 1/2	297.0	158.2	10.0	465.2

MASON WEST
1601 E. Miraloma Ave. Placentia, CA 92870
TEL (714) 630 - 0701, www.masonwest.com

Jiefu "Jeff" Zhang, SE
California SE No. S5270

PIPE WEIGHTS - PVC

SCHEDULE 40 PVC PIPE				
PIPE DIA. (IN)	WALL THICKNESS (IN)	WEIGHT PER FOOT (LBS)		
		PIPE	WATER	TOTAL
1/2	0.109	0.15	0.13	0.28
3/4	0.113	0.20	0.23	0.43
1	0.133	0.30	0.37	0.67
1 1/4	0.140	0.40	0.65	1.05
1 1/2	0.145	0.48	0.88	1.36
2	0.154	0.64	1.45	2.10
2 1/2	0.203	1.02	2.07	3.09
3	0.216	1.33	3.20	4.53
3 1/2	0.226	1.60	4.28	5.88
4	0.237	1.90	5.51	7.41
5	0.258	2.77	8.66	11.43
6	0.280	3.34	12.15	15.49
8	0.322	5.28	21.60	26.88
10	0.366	7.51	34.10	41.61
12	0.406	10.02	48.50	58.52

SCHEDULE 80 PVC PIPE				
PIPE DIA. (IN)	WALL THICKNESS (IN)	WEIGHT PER FOOT (LBS)		
		PIPE	WATER	TOTAL
1/2	0.147	0.15	0.10	0.25
3/4	0.154	0.26	0.19	0.45
1	0.179	0.38	0.31	0.69
1 1/4	0.191	0.53	0.56	1.08
1 1/2	0.200	0.64	0.77	1.40
2	0.218	0.88	1.28	2.16
2 1/2	0.276	1.35	1.83	3.18
3	0.300	1.80	2.86	4.66
3 1/2	0.318	2.20	3.85	6.05
4	0.337	2.64	4.98	7.62
5	0.375	4.13	7.87	12.00
6	0.432	5.03	11.29	16.32
8	0.500	8.02	19.80	27.82
10	0.593	11.89	31.10	42.99
12	0.687	16.37	44.00	60.37

MASON WEST
1601 E. Miraloma Ave. Placentia, CA 92870
TEL (714) 630 - 0701, www.masonwest.com

Jiefu "Jeff" Zhang, SE
California SE No. S5270

PAGE
APP2.3

PIPE WEIGHTS - CAST IRON

NO-HUB CAST IRON PIPE (TYPICAL USES: WASTE, VENT, STORM DRAIN)			
PIPE DIA. (IN)	WEIGHT PER FOOT (LBS)		
	PIPE	WATER	TOTAL
1 1/2	2.5	0.9	3.4
2	3.6	1.5	5.1
3	5.2	3.2	8.4
4	7.4	5.6	13.0
5	9.4	8.6	18.0
6	11.0	12.4	23.4
8	18.0	22.2	40.2
10	25.8	35.0	60.8
12	32.5	49.6	82.1
15	49.7	79.1	128.8

PRESSURE CLASS 150 CAST IRON PIPE			
PIPE DIA. (IN)	WEIGHT PER FOOT (LBS)		
	PIPE	WATER	TOTAL
3	12.2	3.7	15.9
4	16.4	5.7	22.1
6	25.7	12.8	38.5
8	36.7	23.1	59.8
10	48.7	35.5	84.2
12	62.9	51.0	113.9
14	78.8	69.3	148.1
16	95.0	90.3	185.3
18	114.7	114.0	228.7
20	135.9	141.5	277.4
24	190.4	201.0	391.4

MASON WEST
1601 E. Miraloma Ave. Placentia, CA 92870
TEL (714) 630 - 0701, www.masonwest.com

Jiefu "Jeff" Zhang, SE
California SE No. S5270

PAGE
APP2.4

ELECTRICAL CONDUIT WEIGHT TABLES

CONDUIT WEIGHTS				
CONDUIT DIAMETER (IN)	PIPE TYPE	PIPE WEIGHT PER FOOT (LBS)		
		PIPE	CONDUCTORS	TOTAL
½	ELECTRICAL METAL TUBING (EMT) WEIGHT	0.29	0.22	0.51
¾		0.44	0.40	0.84
1		0.64	0.66	1.30
1 ¼		0.95	1.17	2.12
1 ½		1.10	1.60	2.70
2		1.40	2.62	4.02
2 ½		2.05	3.74	5.79
3		2.50	5.76	8.26
3 ½		3.25	7.73	10.98
4		3.70	9.94	13.64
5		---	---	---
6		---	---	---
½	INTERMEDIATE METAL CONDUIT (IMC) WEIGHT	0.60	0.22	0.82
¾		0.82	0.41	1.23
1		1.16	0.66	1.82
1 ¼		1.50	1.17	2.67
1 ½		1.82	1.60	3.42
2		2.42	2.62	5.04
2 ½		4.28	3.47	7.75
3		5.26	5.43	10.69
3 ½		6.12	7.34	13.46
4		6.82	9.50	16.32
5		---	---	---
6		---	---	---
½	RIGID METAL CONDUIT (RMC) WEIGHT	0.79	0.22	1.01
¾		1.05	0.41	1.46
1		1.53	0.66	2.19
1 ¼		2.01	1.17	3.18
1 ½		2.48	1.61	4.09
2		3.32	2.62	5.94
2 ½		5.27	3.74	9.01
3		6.82	5.77	12.59
3 ½		8.31	7.73	16.04
4		9.72	9.95	19.67
5		13.14	15.62	28.76
6		17.45	22.58	40.03

MASON WEST
1601 E. Miraloma Ave. Placentia, CA 92870
TEL (714) 630 - 0701, www.masonwest.com

Jiefu "Jeff" Zhang, SE
California SE No. S5270

PAGE
APP3.0

CABLE TRAY WEIGHT TABLES

CABLE TRAY WEIGHTS WITH DATA CABLE FILL							
TRAY DEPTH (IN)	TRAY WIDTH						
	6" (LBS/FT)	9" (LBS/FT)	12" (LBS/FT)	18" (LBS/FT)	24" (LBS/FT)	30" (LBS/FT)	36" (LBS/FT)
2	5.0	7.0	9.0	14.0	17.0	21.0	27.0
3	7.0	10.0	14.0	21.0	26.0	32.0	41.0
4	9.0	13.0	18.0	27.0	35.0	43.0	54.0
5	12.0	17.0	23.0	34.0	43.0	53.0	68.0
6	14.0	20.0	27.0	41.0	52.0	64.0	81.0

MASON WEST
1601 E. Miraloma Ave. Placentia, CA 92870
TEL (714) 630 - 0701, www.masonwest.com

Jiefu "Jeff" Zhang, SE
California SE No. S5270

PAGE
APP3.1